SULZER

Submersible Sewage Pump Type ABS XFP

XFP 100C-VX | 4", 4 Pole, 3-Phase, 60 Hz, PE1

Submersible Motor Specifications, PE1 Frame

Motor Design		NEMA design B, squirrel cage induction
Motor Type		Fully enclosed Premium Efficiency submersible, IP68 protection rating
Motor Efficiency Standard and Rating		IEC 60034-30, IE3 rating
Motor Efficiency Test Protocol		IEC 60034-2-1
Insulation Material		Class H, 180ºC (356ºF), copper windings
Motor Filling Medium		Air
Temperature Rise		Class A; Class B with optional cooling system
Maximum Fluid Temperature		40ºC (104ºF) continuous, 50ºC (122ºF) intermittent
Cooling System	**OPT**	Environmentally safe, nontoxic, oil-filled motor; no cooling jacket required
Motor Protection	**Thermal**	Normally closed bimetallic switch in each phase, connected in series, 140ºC (284ºF) +/- 5ºC (41ºF) opening temperature
	Leakage	Moisture detection probe in seal sensing chamber (for use with appropriate relay)
Sensing Chamber Filling Medium		Environmentally safe, nontoxic oil
Bearing Type	**Upper**	Single row deep groove ball bearing, permanently lubricated
	Lower	Double row angular contact ball bearing, permanently lubricated
Motor Starter Types		Suitable for use with direct-on-line (DOL), electronic soft starters, and PWM type Variable Frequency Drives [1]
Maximum Starts per Hour		15, evenly spaced
Inverter Duty Rating		Motors meet NEMA MG1, part 31 requirements
Maximum Submergence		20 meters (65 feet)
Available Voltages		208, 230, 460, 600 (consult factory for other voltages)
Voltage Tolerance from Rated		+/-10%
Agency Approvals		Factory Mutual, CSA
Explosion Proof Rating		NEC 500 Class 1, Division 1, Group C & D, Class T3C max surface temp

The picture above may differ from the actual product.
For illustrative purposes only.

[1] Output filters may be required on VFDs. See document **DS-E00-001** for details.

Motor Ratings, PE1 Frame

Motor Model	Input Power (P1)	Rated Power Output (P2)	Nominal RPM	Rated Voltage	Full Load Amps	Locked Rotor Amps	NEMA Code Letter	NEMA Service Factor	Motor Efficiency at % Load			Power Factor at % Load		
									100	75	50	100	75	50
PE 22/4	2.5 kW	2.2 kW 3.0 HP	1762	208 230 460 600	10.1 9.1 4.6 3.5	92 83 42 32	M	1.3	89.7	88.4	84.6	.677	.579	.449
PE 28/4	3.1 kW	2.8 kW 3.8 HP	1748	208 230 460 600	11.5 10.4 5.2 4.0	92 83 42 32	K	1.3	90.7	91.1	89.6	.742	.650	.511
PE 35/4	3.9 kW	3.5 kW 4.7 HP	1731	208 230 460 600	13.7 12.4 6.2 4.8	92 83 41 32	H	1.3	89.5	91.3	92.5	.790	.721	.582

DS-E01-051 REV: 1 DATE: 09/16 Specifications Subject to Change Without Notice

Cable Data, PE1 Frame

	Motor	Motor Voltage	Cable Qty	Cable Type [2]	Cable Nominal Outside Diameter +/- .5mm (.02") Power	Ground
Power Cable	PE 22/4	208 volt	1	SOOW 14/7	17.6mm (0.69")	Integrated w/ Power
		230 volt	1	SOOW 14/7	17.6mm (0.69")	Integrated w/ Power
		460 volt	1	SOOW 14/7	17.6mm (0.69")	Integrated w/ Power
		600 volt	1	SOOW 14/7	17.6mm (0.69")	Integrated w/ Power
	PE 28/4	208 volt	1	SOOW 14/7	17.6mm (0.69")	Integrated w/ Power
		230 volt	1	SOOW 14/7	17.6mm (0.69")	Integrated w/ Power
		460 volt	1	SOOW 14/7	17.6mm (0.69")	Integrated w/ Power
		600 volt	1	SOOW 14/7	17.6mm (0.69")	Integrated w/ Power
	PE 35/4	208 volt	1	SOOW 12/7	18.8mm (0.74")	Integrated w/ Power
		230 volt	1	SOOW 14/7	17.6mm (0.69")	Integrated w/ Power
		460 volt	1	SOOW 14/7	17.6mm (0.69")	Integrated w/ Power
		600 volt	1	SOOW 14/7	17.6mm (0.69")	Integrated w/ Power
Control Cable	**Motor Monitoring Type [3]**		**Cable Qty**	**Cable Type**	**Cable Nominal Outside Diameter +/- .5mm (.02")**	
	Std monitoring		N/A	Integrated w/ Power	Integrated w/ Power	
Cable Length	Standard: 15m (49 feet)		Optional: 20m (65 feet), 30m (98 feet); Consult Factory for longer lengths			

[2] Type SOOW power cables have integrated control wires. [3] See motor protection on page 1.

Pump Data

Discharge Size		4" flanged, compatible with 4" class 125 ANSI flanges									
Suction Size (Wet-Pit / Dry-Pit)		4" flanged / 4" flanged, compatible with 4" class 125 ANSI flanges, threaded for 8x5/8-11 UNC screws, 26mm (1.0") deep									
Volute Pressure Rating		16 bar (232 psi)									
Impeller Type		Vortex, 6-vane, w/ Seal Protection System									
Impeller	**Code**	.5	.4	.3	.2	.1					
	Diameter, mm (in.)	140 (5.5)	150 (5.9)	160 (6.3)	175 (6.9)	186 (7.3)					
Solids Passage Size, mm (in.)		100 (3.94)	100 (3.94)	100 (3.94)	100 (3.94)	100 (3.94)					
Min. Recommended Flow, GPM [4]		80	90	100	110	130					

[4] Recommend minimum continuous flow. Consult factory for applications below this flow rate.

Materials of Construction

		Standard	Optional
Power/Control Cable Jacket		Chlorinated Polyethylene (CPE)	
Lifting Hoop		Stainless Steel 1.4401 (AISI 316)	
Cable Connection Chamber		Cast Iron EN-GJL-250 (ASTM A-48, Class 35B)	
Motor Housing		Cast Iron EN-GJL-250 (ASTM A-48, Class 35B)	
Intermediate Housing		Cast Iron EN-GJL-250 (ASTM A-48, Class 35B)	
Seal Plate		Cast Iron EN-GJL-250 (ASTM A-48, Class 35B)	
Pump and Motor Shaft		Stainless Steel 1.4021 (AISI 420)	
Impeller		Cast Iron EN-GJL-250 (ASTM A-48, Class 35B)	
Wear Parts	**Bottom/Wear Plate**	N/A	
Volute		Cast Iron EN-GJL-250 (ASTM A-48, Class 35B)	
External Hardware		Stainless Steel 1.4401 (AISI 316)	
O-Rings and Cable Glands		Nitrile (Buna-N)	Viton®
Mechanical Seals	**Lower**	Silicon Carbide / Silicon Carbide, Nitrile, 316 SS	Silicon Carbide / Silicon Carbide, Viton®, 316 SS
	Upper	Silicon Carbide / Silicon Carbide, Nitrile, 316 SS	
Coating/Protection		Two-part epoxy, blue, 120µm (4.7 mil) DFT	Two-part epoxy, blue, 400µm (15.7 mil); Wet-end liquid ceramic coating, 500µm (19.7 mil); Zinc Anodes

General Data (Standard Materials of Construction & Cable Length)

	PE 22/4	PE 28/4	PE 35/4			
Overall Height	716mm (28.2")	716mm (28.2")	716mm (28.2")			
≈ Pump Weight (Non-Cooled)	131 kg (289 lb)	131 kg (289 lb)	131 kg (289 lb)			

DS-E01-051 REV: 1 DATE: 09/16 Specifications Subject to Change Without Notice

XFP100C VX 60HZ (wet pit)

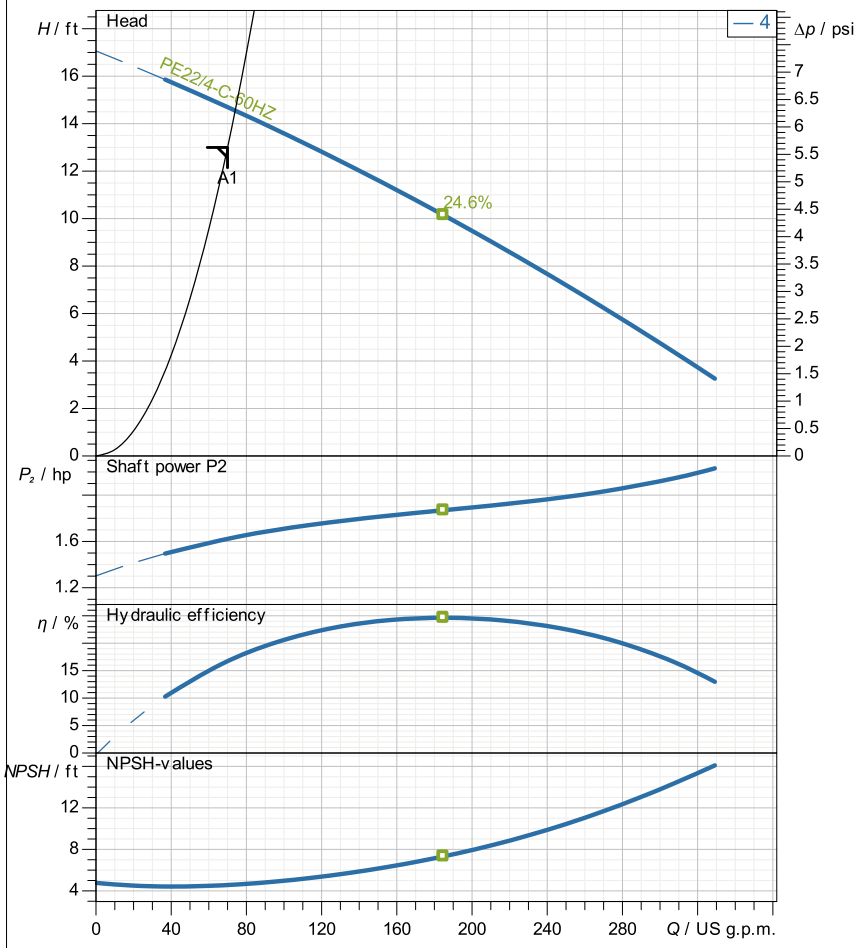

Test Standard
ISO 9906, HI 11.6/14.6≤10kW

Curve Name
4

Impeller Diameter
150 mm

This pump (non oil-cooled) is suitable for wet pump installation only.
It is NOT suitable for dry pump installation.

2024-06-18

Operating data specification			
Flow	74.05 US g.p.m.	Power input	1.91 hp
Efficiency	17.3 %	Head	14.5 ft
NPSH	4.61 ft	Shaft power	1.64 hp
Temperature	68 °F	Fluid	Water
No. of pumps	1	Nature of system	Single head pump
Pump data			
Type	XFP100C VX 60HZ (wet pit)	Make	SULZER
Series	XFP PE1-PE3	Impeller	Vortex impeller
N° of vanes	6	Impeller size	150 mm
Free passage	100 mm	Suction flange	DN100
Discharge flange	DN100	Type of installation	
Moment of inertia	0.114 lb ft²		Wet well installation with pedestal
Motor data			
Rated voltage	460 V	Frequency	60 Hz
Rated power P2	2.95 hp	Nominal Speed	1760 rpm
Number of poles	4	Efficiency	89.7 %
Power factor	0.677	Rated current	4.55 A
Starting current	41.5 A	Rated torque	8.79 lbf ft
Starting torque	20.4 lbf ft	Degree of protection	IP 68
Insulation class	H	No. starts per hour	15

Sulzer reserves the right to change any data and dimensions without prior notice
and can not be held responsible for the use of information contained in this software.

Curve number	Pump performance curves	SULZER
Reference curve XFP100C-VX 60HZ	**XFP100C VX 60HZ (wet pit)**	

					Discharge DN100	Frequency 60 Hz
Density 62.31 lb/ft³	Viscosity 1.077E-5 ft²/s	Test Standard ISO 9906, HI 11.6/14.6≤10kW			Rated speed 1782 rpm	Date 2024-06-18
Flow 74.05 US g.p.m.	Head 14.5 ft	Shaft power 1.64 hp	Power input 1.91 hp	Rated power P2 2.95 hp	Hyd. efficiency 17.3 %	NPSH 4.61 ft

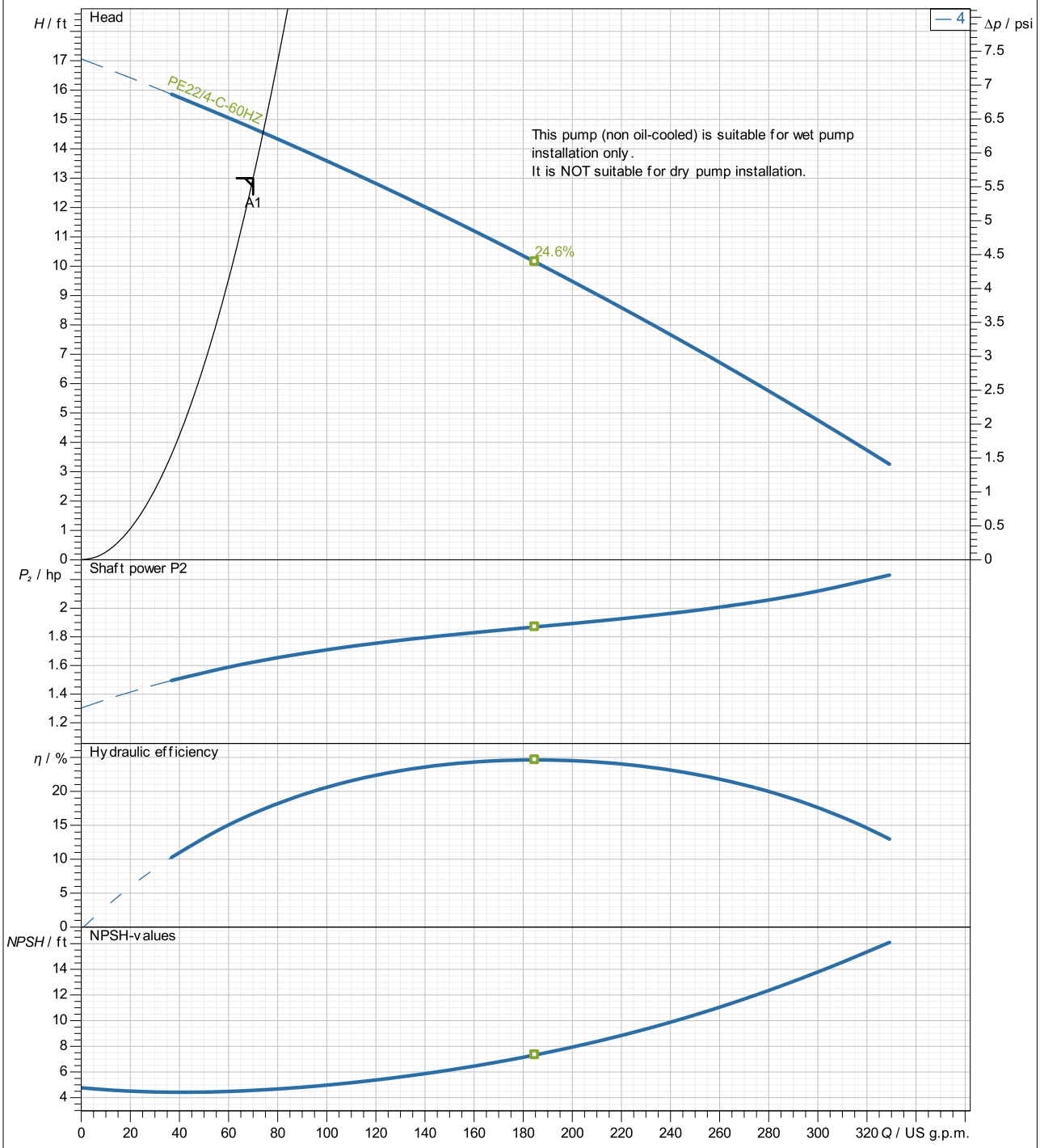

Wet well installation with pedestal

Impeller size	N° of vanes	Impeller	Solid size	Revision
150 mm	6	Vortex impeller	100 mm	

Sulzer reserves the right to change any data and dimensions without prior notice
and can not be held responsible for the use of information contained in this software.

Frequency 60 Hz	PE1	**Motor performance curve** PE22/4-C-60HZ	SULZER

Rated power	Service factor	Nominal Speed	Number of poles	Rated voltage	Date
2.95 hp	1.3	1762 rpm	4	460 V	2024-06-18

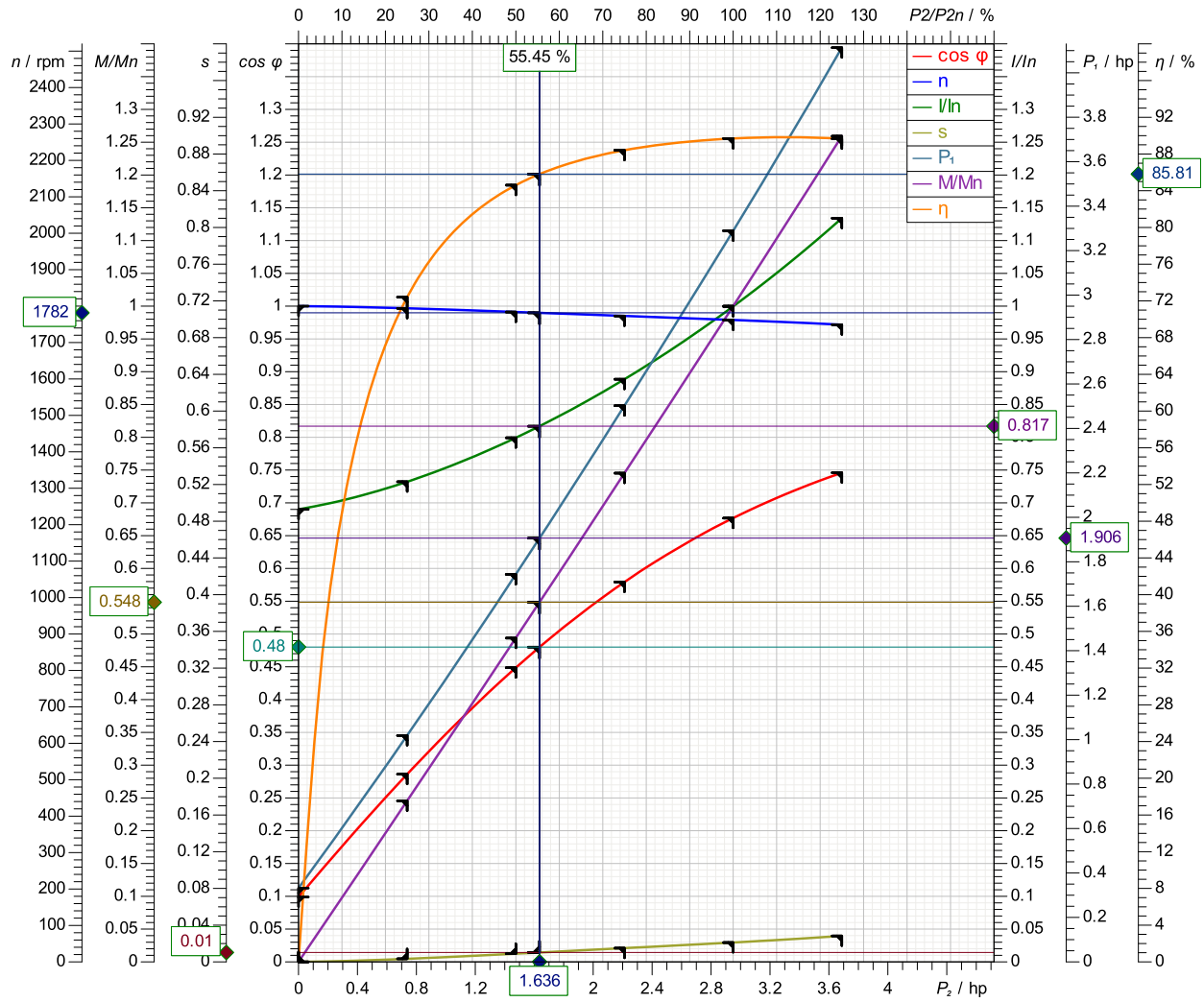

Symbol	No load	25 %	50 %	75 %	100 %	125 %
P_2 / hp	0	0.7376	1.475	2.213	2.95	3.688
P_1 / hp	0.332	1.019	1.743	2.503	3.289	4.113
I / A	3.14	3.332	3.637	4.043	4.548	5.16
cos φ	0.09897	0.2862	0.4487	0.5793	0.6768	0.746
n / rpm	1800	1794	1784	1773	1762	1749
s / %	0.0002205	0.3322	0.8911	1.498	2.112	2.833
M / lbf ft	0	2.159	4.343	6.555	8.795	11.07
η / %	0	72.41	84.61	88.42	89.69	89.66

Tolerance according to VDE 0530 T1 12.84 for rated power

Starting current	Starting torque	Moment of inertia	No. starts per hour
41.5 A	20.4 lbf ft	0.214 lb ft²	15

Sulzer reserves the right to change any data and dimensions without prior notice and can not be held responsible for the use of information contained in this software.

SULZER	Massblatt XFP 100C–VX Nassinstallation Dimension sheet WET–WELL Installation Dimensioni Installazione sommersa Hoja de dimensiones instalácion sumergida Plan d'encombrement Installation noyee	No: AN–M.22.624 – 04 Drawn: 11/08/10 D.Whelan Issue Date: 09/05/2013 Änderungen vorbehalten Technical changes reserved Con riserva di modifiche Con reserva de modificaciones Sous réserve de modification

S.I.

50 Hz

Typ Type Tipo	Gewicht Weight Poids Peso (kg)
PE 15/4	111
PE 22/4	121
PE 29/4	121

60 Hz

Typ Type Tipo	Gewicht Weight Poids Peso (kg)
PE 18/4W	121
PE 22/4	131
PE 28/4	131
PE 28/4W	131
PE 35/4	131

	Part No.	Y(mm)
	DN 100	
	6 232 0652	
	6 232 0653	ø 110
	6 232 0654	ø 115
ASA	6 232 0664	
ASA	6 232 0665	ø 115

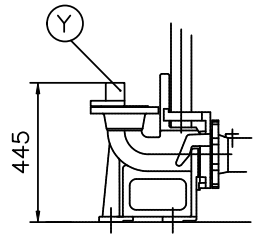

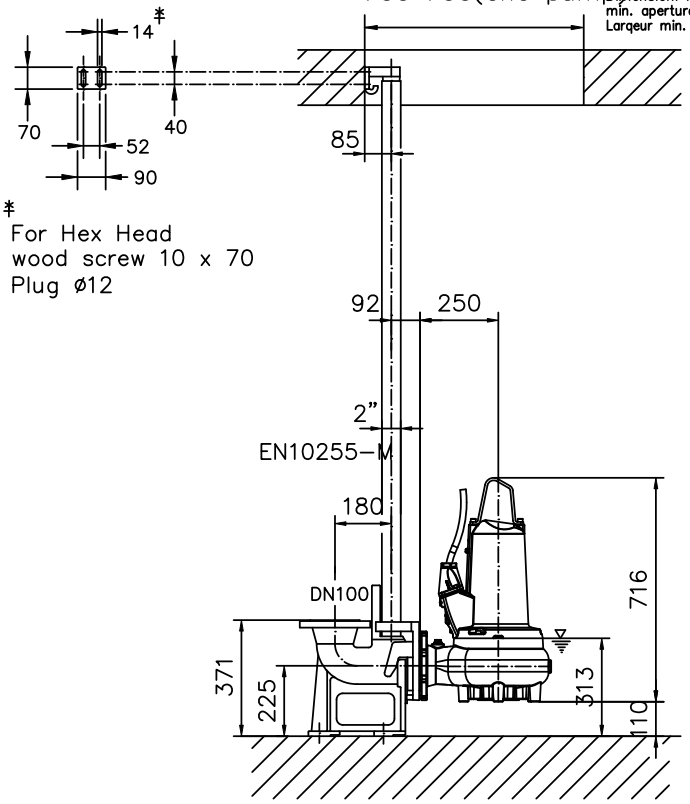

‡ For Hex Head wood screw 10 x 70 Plug ø12

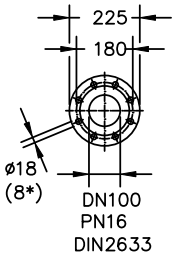

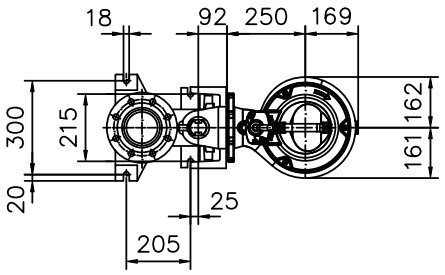

Gewicht: Beinhaltet Pumpe,Halterung(Fussstuck) und Kabel (50 Hz = 10 m; 60 Hz = 15 m)	Guss–Allgemeintoleranzen nach DIN1680 – GTB16
Weight: includes pump, slider bracket and cable (50 Hz = 10 m; 60 Hz = 15 m)	General tolerances for castings in acc. to DIN1680–GTB16
Peso: include pompa, pezzo intermedio a cavo (50 Hz = 10 m; 60 Hz = 15 m)	Tolleranze generali delle fusioni secondo DIN1680–GTB16
Peso: Incluye bomba, soporte deslizante y cable (50 Hz = 10 m; 60 Hz = 15 m)	Tolerancias generales para la fundicion seg. de DIN1680–GTB16
Poids : incluant la pompe, le coulisseau et le cable (50 Hz = 10 m; 60 Hz = 15 m)	Tolérance générale de la fonderie selon DIN1680–GTB16

SULZER	Massblatt XFP 100C–VX Nassinstallation Dimension sheet WET–WELL Installation Dimensioni Installazione sommersa Hoja de dimensiones instalácion sumergida Plan d'encombrement Installation noyee	No: AN–M.22.624 – 04 Drawn: 11/08/10 D.Whelan Issue Date: 09/05/2013 Änderungen vorbehalten Technical changes reserved Con riserva di modifiche Con reserva de modificaciones Sous réserve de modification

50 Hz

Typ Type Tipo	Gewicht Weight Poids Peso (lbs)
PE 15/4	245
PE 22/4	267
PE 29/4	267

60 Hz

Typ Type Tipo	Gewicht Weight Poids Peso (lbs)
PE 18/4W	267
PE 22/4	289
PE 28/4	289
PE 28/4W	289
PE 35/4	289

	Part No.	Y(mm)
	DN 100	
	6 232 0652	
	6 232 0653	ø 110
	6 232 0654	ø 115
ASA	6 232 0664	
ASA	6 232 0665	ø 115

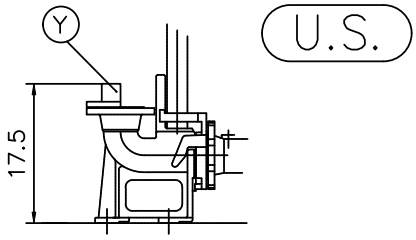

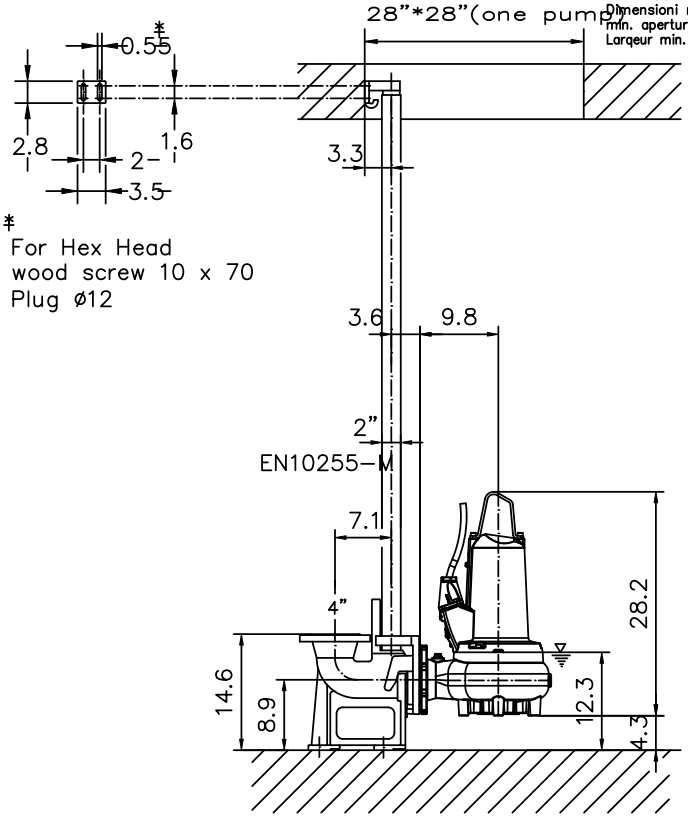

For Hex Head
wood screw 10 x 70
Plug ø12

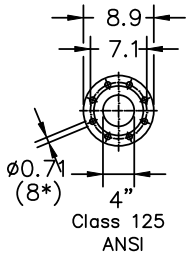

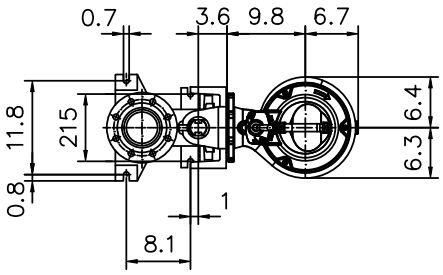

Gewicht: Beinhaltet Pumpe,Halterung(Fussstuck) und Kabel (50 Hz = 10 m; 60 Hz = 15 m)	Guss–Allgemeintoleranzen nach DIN1680 – GTB16
Weight: includes pump, slider bracket and cable (50 Hz = 10 m; 60 Hz = 15 m)	General tolerances for castings in acc. to DIN1680–GTB16
Peso: include pompa, pezzo intermedio a cavo (50 Hz = 10 m; 60 Hz = 15 m)	Tolleranze generali delle fusioni secondo DIN1680–GTB16
Peso: Incluye bomba, soporte deslizante y cable (50 Hz = 10 m; 60 Hz = 15 m)	Tolerancias generales para la fundicion seg. de DIN1680–GTB16
Poids : incluant la pompe, le coulisseau et le cable (50 Hz = 10 m; 60 Hz = 15 m)	Tolérance générale de la fonderie selon DIN1680–GTB16