LEGEND

- Ⓐ 8" Swing Check Valve
- Ⓑ 8" Resilient Seat Gate Valve W/Handwheel
- Ⓒ 8"-90° Bend
- Ⓓ 8"x 8"x 8" Tee
- Ⓔ Spool Piece - 8" Pipe
- Ⓕ Wastewater Shredder
- Ⓖ Methanol Injection Assembly
- Ⓗ Trisodium Phosphate Injection Assembly

Note 1. Distance Between ℄ Of Pump Discharge To Be Set By Pump Supplied. Contractor Shall Verify Minimum Pump Requirement And Adjust Accordingly If Layout Shown Cannot Be Maintained.

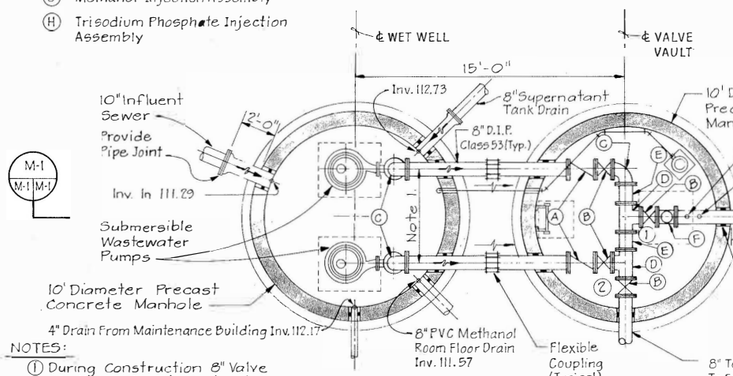

PLAN
Scale: 1/4"=1'-0"

NOTES:

① During Construction 8" Valve Shall Be Closed. Contractor Shall Provide Temporary Bracing.

② During Construction 8" Valve Shall Be Open. Upon Completion Of Work, Valve Shall Be Closed And 8" Valve In Note 1 Shall Be Opened.

③ See Structural Details Sheets M-11 And M-12

④ 4" Drain From Maintenance Building Inv. 112.17 (Reflected)

⑤ 8" PVC Methanol Room Floor Drain Inv. 111.57 (Reflected)

⑥ Coordinate Location Point See Sheet C-2.

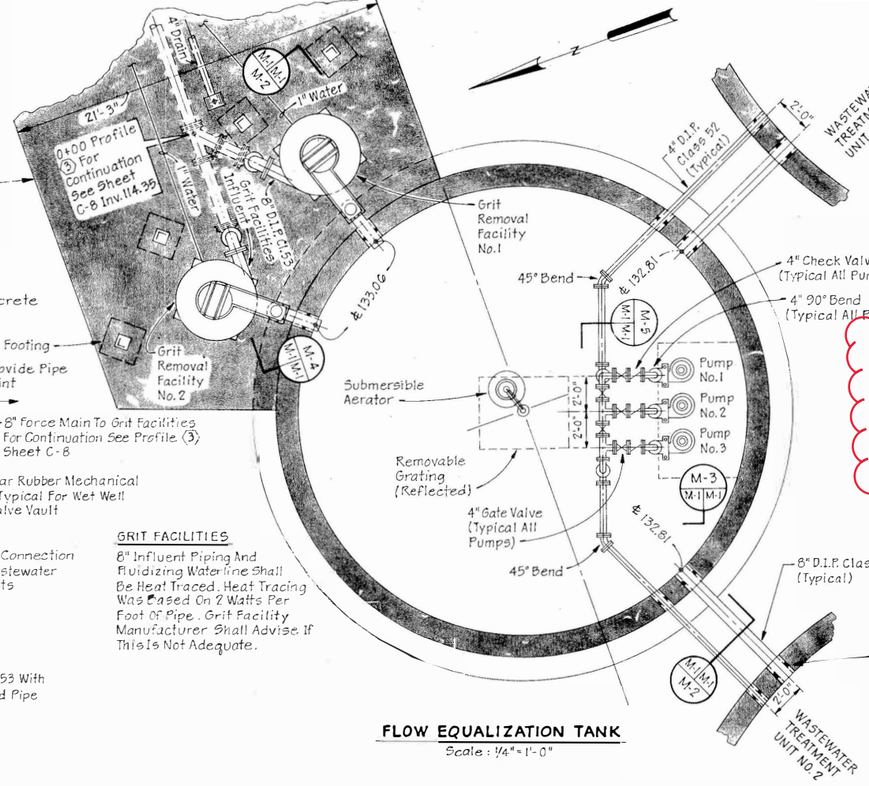

FLOW EQUALIZATION TANK
Scale: 1/4"=1'-0"

GRIT FACILITIES

8" Influent Piping And Fluidizing Water Line Shall Be Heat Traced. Heat Tracing Was Based On 2 Watts Per Foot Of Pipe. Grit Facility Manufacturer Shall Advise If This Is Not Adequate.

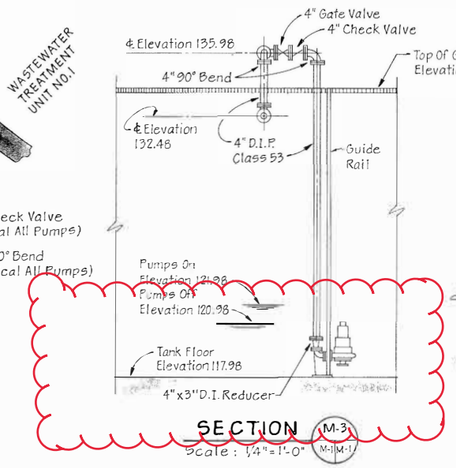

SECTION M-3 M-1 M-1
Scale: 1/4"=1'-0"

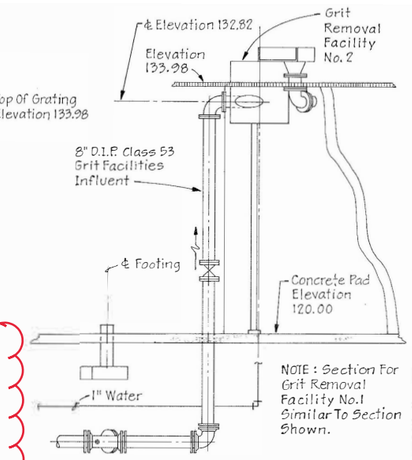

SECTION M-4 M-1 M-1
Scale: 1/4"=1'-0"

INFLUENT PUMPING STATION

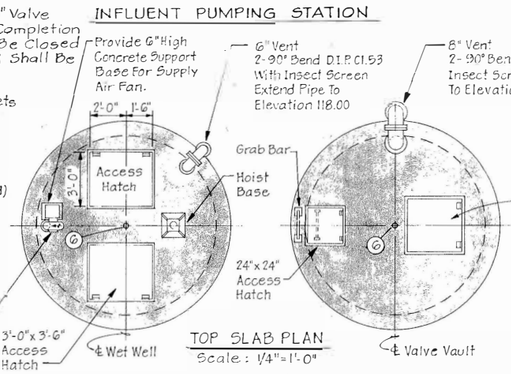

NOTE: Top Slab Plan Shown For Influent Pumping Station - Effluent Pumping Station Is Similar.

TOP SLAB PLAN
Scale: 1/4"=1'-0"

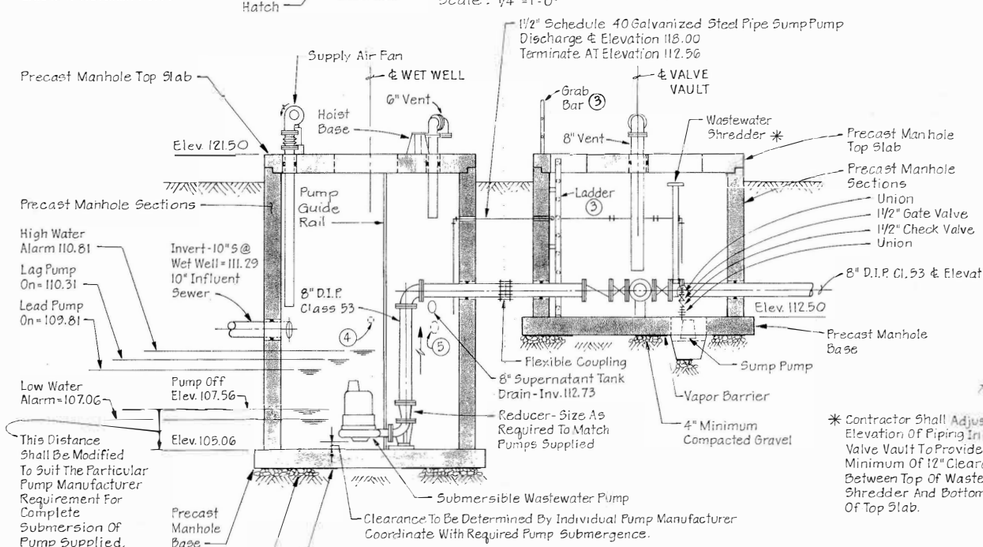

✱ Contractor Shall Adjust ℄ Elevation Of Piping In Valve Vault To Provide A Minimum Of 12" Clearance Between Top Of Wastewater Shredder And Bottom Of Top Slab.

SECTION M-1 M-1 M-1
Scale: 1/4"=1'-0"

INFLUENT PUMPING STATION

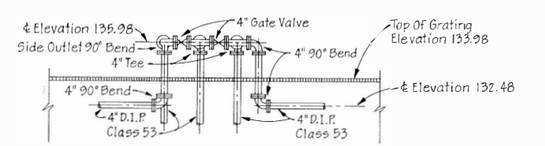

SECTION M-5 M-1 M-1
Scale: 1/4"=1'-0"

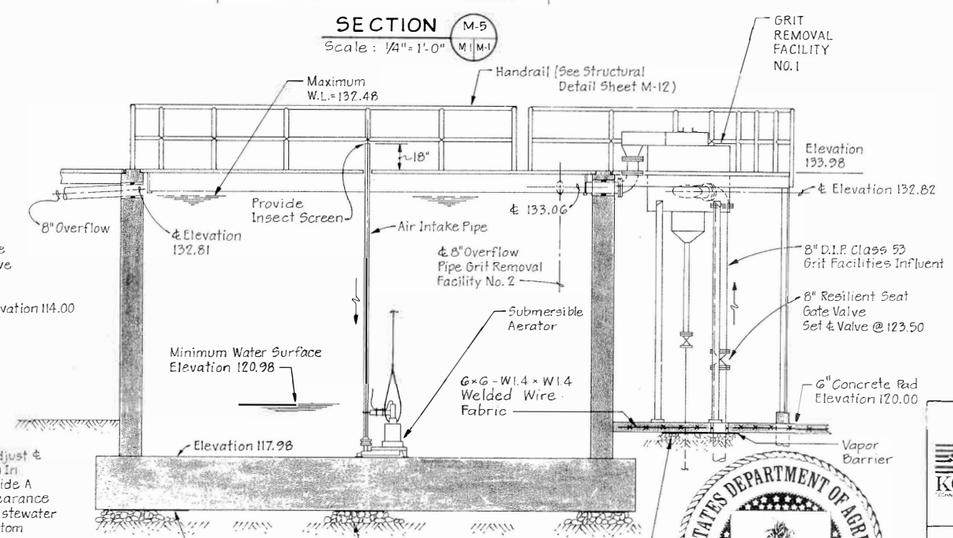

NOTE: FOR STRUCTURAL DETAILS SEE SHEET M-2, M-3, AND M-4

SECTION M-2 M-1 M-1
Scale: 1/4"=1'-0"

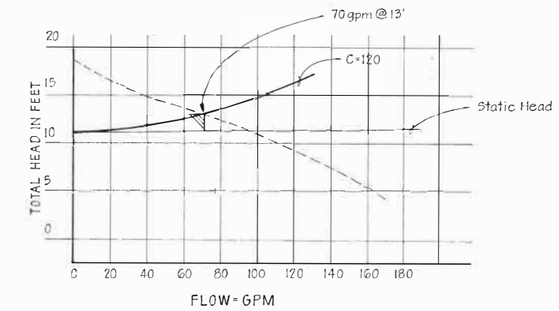

SYSTEM CURVE - FLOW EQUALIZATION PUMPS

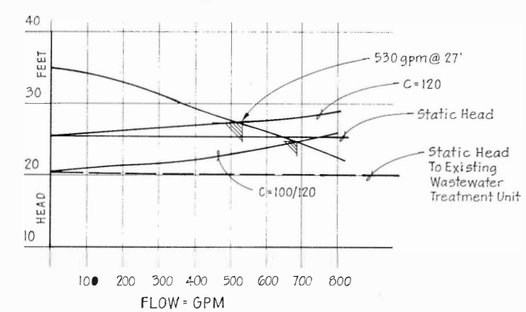

SYSTEM CURVE - INFLUENT PUMPS

95% SUBMITTAL

M-1

KCI TECHNOLOGIES
ENGINEERS and PLANNERS
1020 CROMWELL BRIDGE ROAD
BALTIMORE, MARYLAND 21286
(410) 321-5500

NO.	DATE	BY	DESCRIPTION

REVISIONS

USDA Agricultural Research Service

BARC-WEST WASTEWATER TREATMENT PLANT
INFLUENT PUMPING STATION
GRIT FACILITIES
FLOW EQUALIZATION TANK

A-E FIRM	USDA		
PROJECT MANAGER W. B. HAMMEN	EPM		
DESIGNER W. B. HAMMEN	PPM		
CHECKED BY	SAFETY & HEALTH	PROJECT NO. 90-1131	SHEET 16 OF 49
	REAL PROPERTY	DATE 5-28-93	

FACILITIES DIVISION
FACILITIES ENGINEERING BRANCH
6303 IVY LANE
GREENBELT, MARYLAND 20770-1433

A.E. INC. BALTIMORE