NOTE:
6" Supernatant Pipe Is Shown Rotated 45° From True Position.

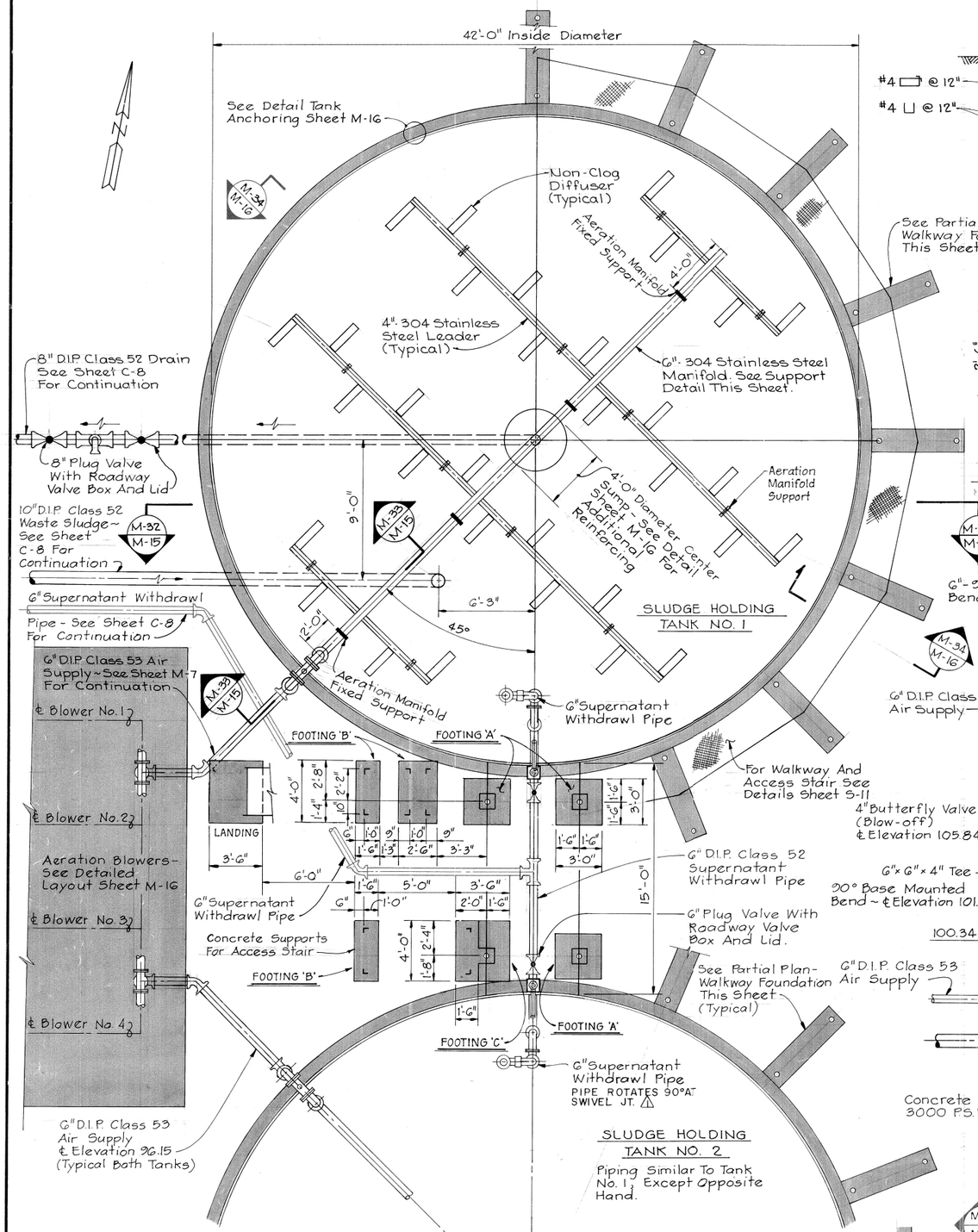

PLAN
Scale: 1/4" = 1'-0"

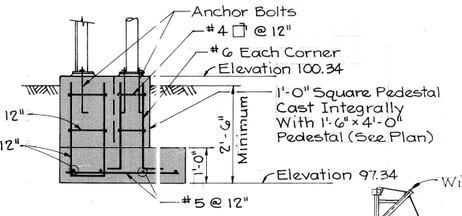

FOOTING 'C'
Scale: 1/2" = 1'-0"

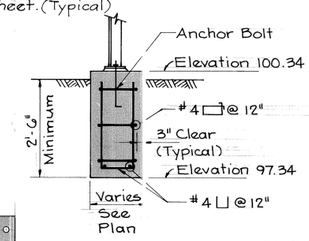

FOOTING 'B'
Scale: 1/2" = 1'-0"

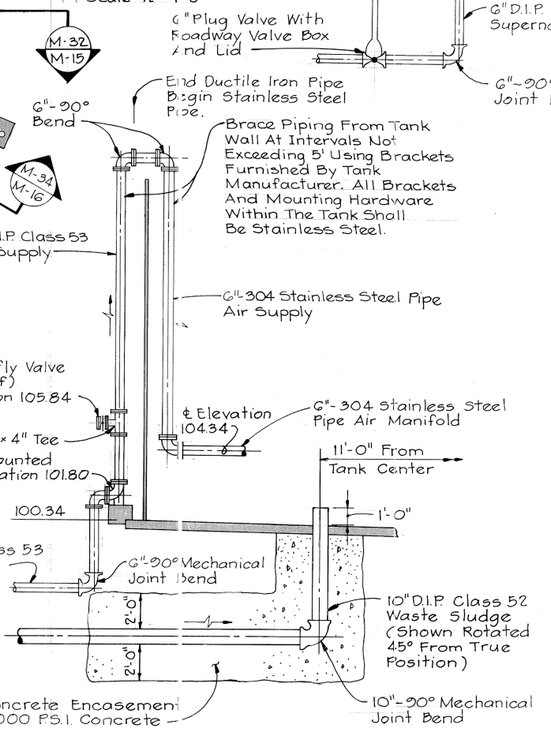

SECTION
M-33 / M-15
Scale: 1/4" = 1'-0"

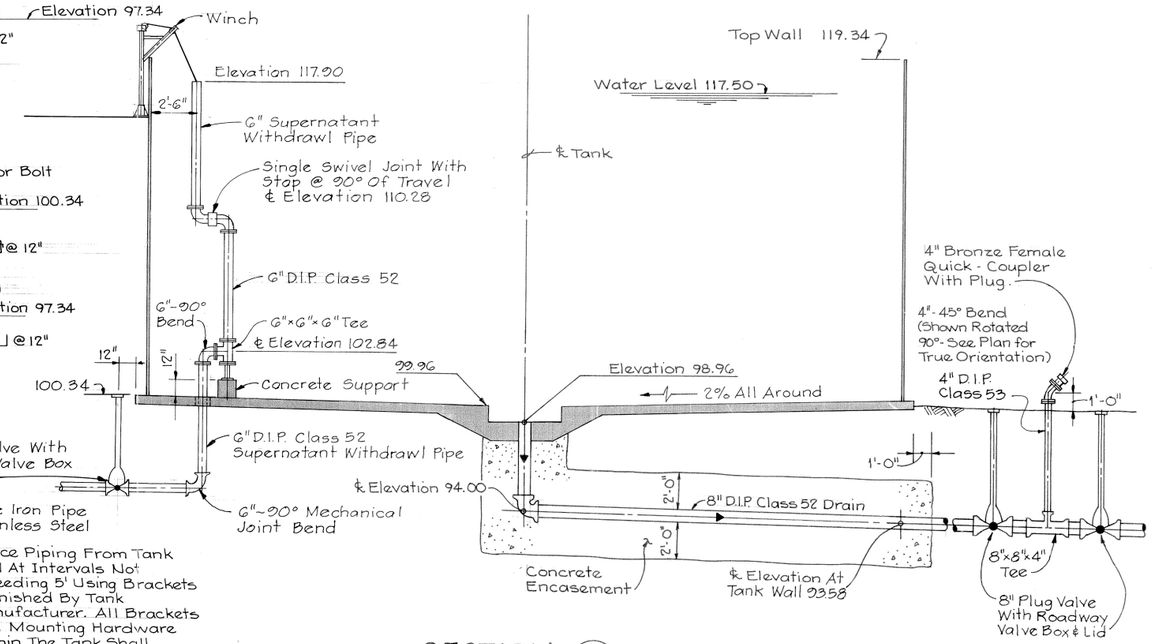

SECTION
M-32 / M-15
Scale: 1/4" = 1'-0"

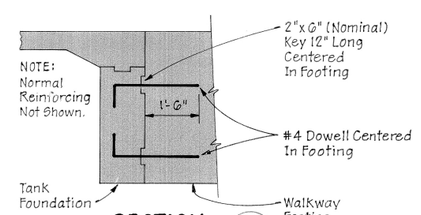

SECTION
M-40 / M-15
Scale: 1/2" = 1'-0"

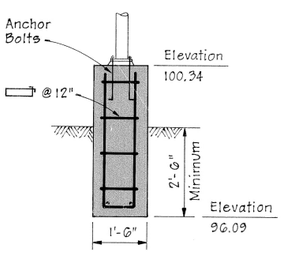

SECTION
M-41 / M-15
Scale: 1/2" = 1'-0"

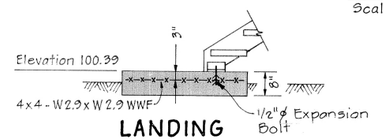

LANDING
Scale: 1/2" = 1'-0"

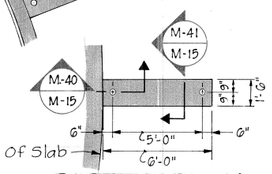

PARTIAL PLAN
WALKWAY FOUNDATION
Scale: 1/4" = 1'-0"

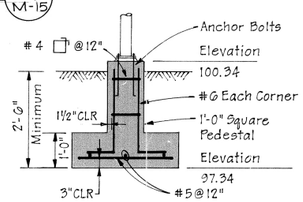

FOOTING 'A'
Scale: 1/2" = 1'-0"

M-15

NO.	DATE	BY	DESCRIPTION
1	6-1-95	C.K.	AS BUILT

REVISIONS

KCI TECHNOLOGIES
ENGINEERS and PLANNERS
1020 CROMWELL BRIDGE ROAD
BALTIMORE, MARYLAND 21204
(301) 321-5500

A-E FIRM	USDA
PROJECT MANAGER: W. B. HAMMEN	EPM
DESIGNER: J.V. DECKER	PPM
CHECKED BY: H. L. WHITELEY	SAFETY & HEALTH
DRAWN BY: J. M. GRAY	REAL PROPERTY

USDA
Agricultural Research Service

BARC - EAST WASTEWATER TREATMENT PLANT

SLUDGE HOLDING TANKS
MECHANICAL - STRUCTURAL

PROJECT NO.	FACILITIES CONSTRUCTION MANAGEMENT DIVISION FACILITIES ENGINEERING BRANCH 6303 IVY LANE GREENBELT, MARYLAND 20770-1433	SHEET
90 - 1131		65
DATE 3-18-92		OF 93

A & E INC. BALTIMORE

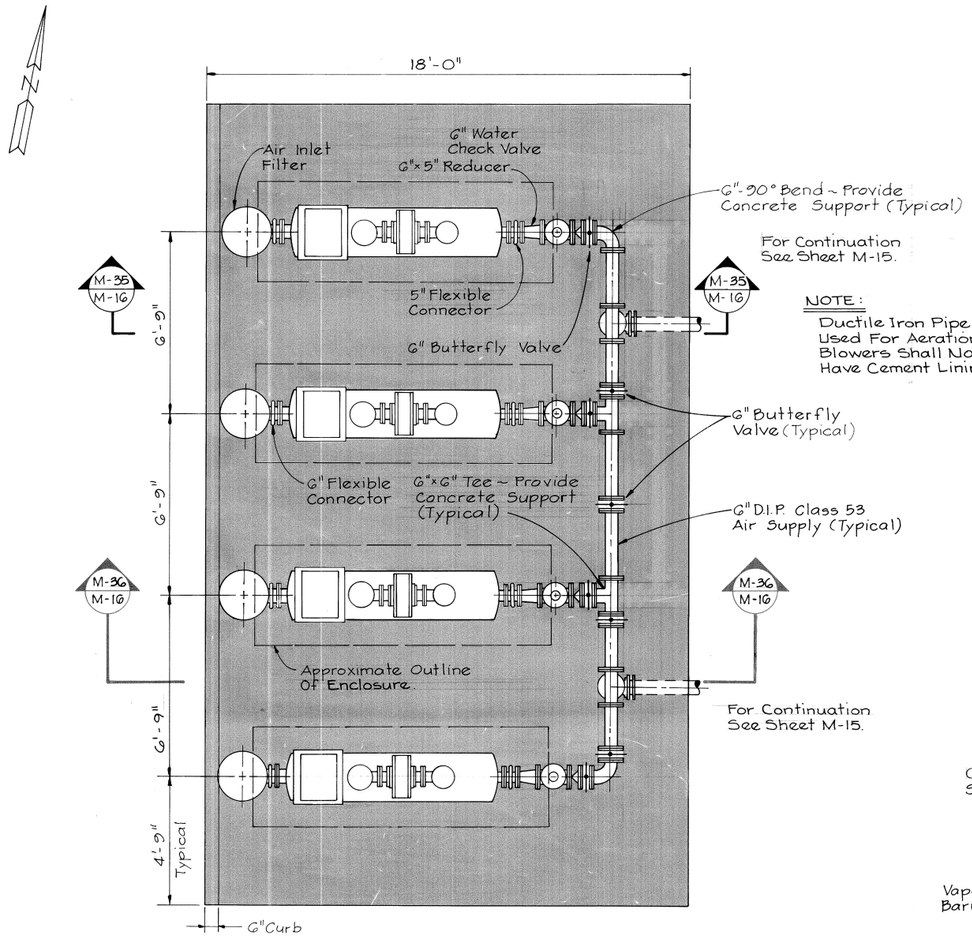

NOTE:
Ductile Iron Pipe Used For Aeration Blowers Shall Not Have Cement Lining.

PLAN
SLUDGE HOLDING TANK - AERATION BLOWERS
Scale: 3/8" = 1'-0"

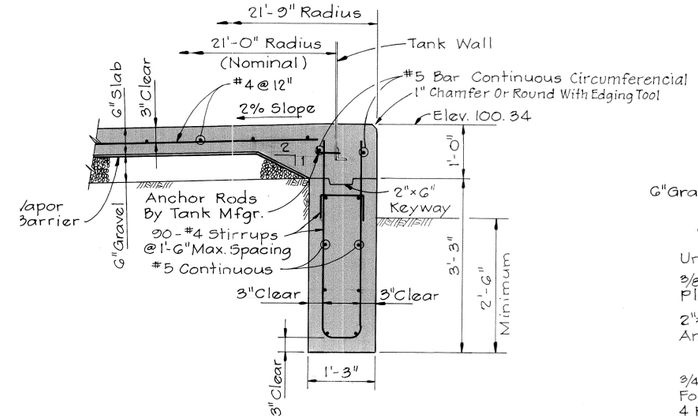

SECTION
Scale: 3/4" = 1'-0" (M-34 / M-15)

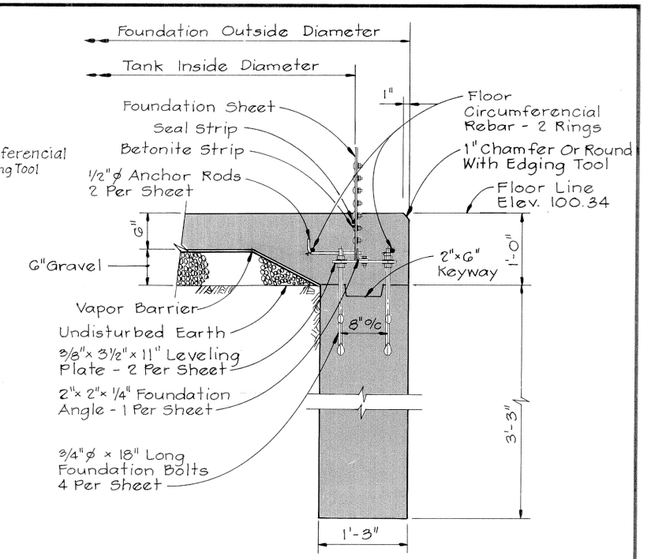

DETAIL
TANK ANCHORING
Scale: 1" = 1'-0"

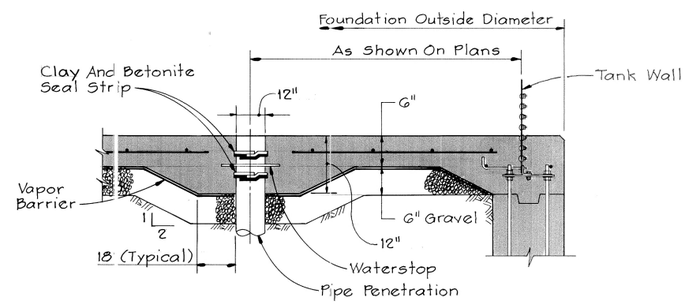

DETAIL - PIPE PENETRATION
Not To Scale

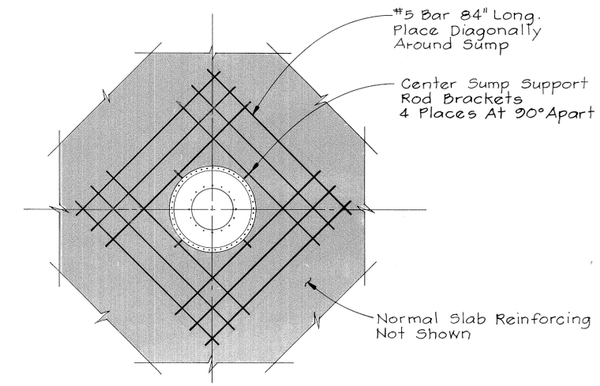

DETAIL
ADDITIONAL REINFORCING AT CENTER SUMP
Not To Scale

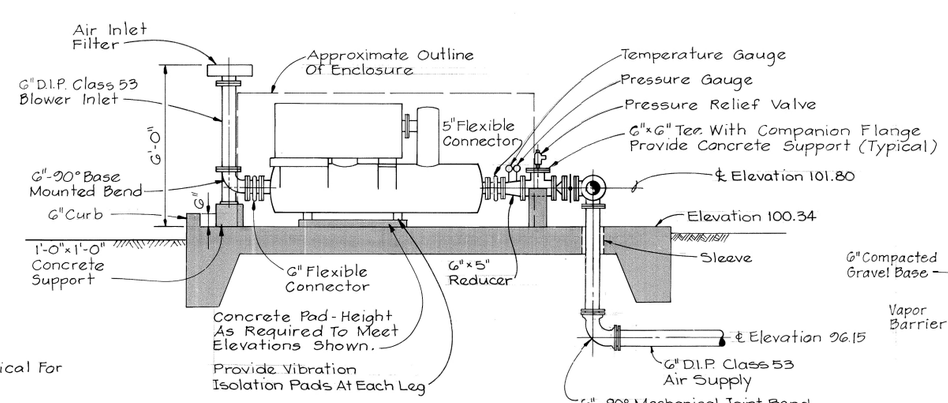

NOTES:
1. Piping Shown Is Typical For All Blower Units.
2. All Pipe Gaskets Shall Be Viton.

SECTION
Scale: 3/8" = 1'-0" (M-35 / M-16)

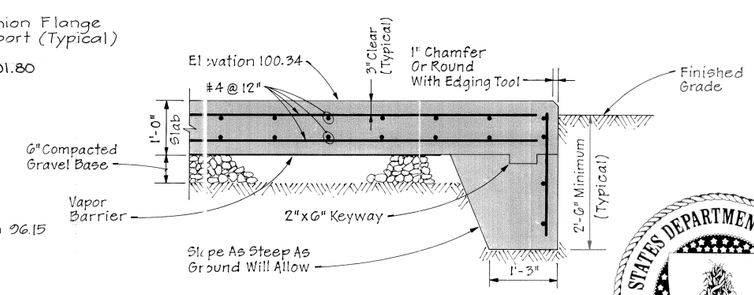

SECTION
Scale: 3/4" = 1'-0" (M-36 / M-16)

M-16

NO.	DATE	BY	DESCRIPTION
	6-1-95	C.K	AS BUILT

REVISIONS

KCI TECHNOLOGIES
ENGINEERS and PLANNERS
1020 CROMWELL BRIDGE ROAD
BALTIMORE, MARYLAND 21204
(301) 321-5500

USDA — Agricultural Research Service

BARC - EAST WASTEWATER TREATMENT PLANT

SLUDGE HOLDING TANK AND BLOWER DETAILS

A-E FIRM	USDA
PROJECT MANAGER	EPM
W.B. HAMMEN	
DESIGNER	PPM
J.V. DECKER	
CHECKED BY	SAFETY & HEALTH
H.L. WHITELEY	
DRAWN BY	REAL PROPERTY
T.E. SCHOTT	
PROJECT NO.	90-1131
DATE	3-18-92

FACILITIES CONSTRUCTION MANAGEMENT DIVISION
FACILITIES ENGINEERING BRANCH
6303 IVY LANE
GREENBELT, MARYLAND 20770-1433

SHEET 66 OF 93

A & E INC. BALTIMORE