SCOPE OF WORK

GENERAL DESCRIPTION: The contractor shall provide all labor, material, equipment, and supervision to accomplish this **FY 2026 Upgrade Request for the following locations and military services:**

Line Item	Western Upstate New York			
0001	Navy Recruiting Station	3300 Chambers Road,	Horseheads, NY (Chemung County)	NY
0002	Marines Recruiting Station	3300 Chambers Road,	Horseheads, NY (Chemung County).	NY
0003	Navy Recruiting Station	219 West First Street,	Oswego, NY (Oswego County).	NY
0004	Air Force Recruiting Station	219 West First Street,	Oswego, NY (Oswego County).	NY
0005	Navy Recruiting Station	201 West 3rd Street,	Jamestown, NY (Chautauqua County)	NY
0006	Army Recruiting Station	3701 Vestal Pkwy E.,	Vestal, NY (Broome County)	NY
0007	Air Force Recruiting Station	3701 Vestal Pkwy E.,	Vestal, NY (Broome County)	NY
0008	Navy Recruiting Station	3701 Vestal Pkwy E.,	Vestal, NY (Broome County)	NY
0009	Marines Recruiting Station	3701 Vestal Pkwy E.,	Vestal, NY (Broome County)	NY
0010	Navy Recruiting Station	1577 Ridge Rd. West,	Greece, NY (Monroe County)	NY

a. **Selected Contractor must complete this job no later than 120 Days at contract award and must start work at time of award.**
b. **Selected Contractor must complete this job during normal business hours (9am – 5pm) in the presence of an authorized military personnel. Under no circumstances will a contractor be given keys or access codes to the facility.**
c. **Selected Contractor must remove and dispose (from premises) all existing materials.**
d. **Selected Contractor will contact Josh Coburn at 315-960-1636 and provide a work schedule before gaining access to the Installation.**
e. **Selected Contractor will secure work site before, during and after work job.**
f. **Selected Contractor must clean up after completing the job.**
g. **Selected Contractor must have legal and authorized personnel to perform this job. However, no security clearance is required.**
h. **Selected Contractor must relocate furniture and other items, within the center of the office space, storage room and/or testing room; however, storage and testing room should not be blocked from future access. Contractors are responsible for moving and replacing all furniture and equipment including the wall artwork back to their original location.**
i. **Upon request from the Army Corps of Engineers, Owners/Property Manager, the selected contractor must provide insurance bond. (AMOUNT TO BE DETERMINDED BY OWNER, IF REQUIRED OR REQUESTED) in the owner's name.**
j. **Selected Contractor will contact Josh Coburn at 315-960-1636 (the POC) for full inspection after completion. Payments will not be released until the work is fully done and inspected.**
k. **Selected Contractor must be aware that payment may not be received until 60 days after work is completed and inspected.**

Navy Recruiters located at 3300 Chambers Rd, Horseheads, NY

ITEM 0001A: REPAIR DESK STATION FOR VIDEO INTERCOM ENTRY SYSTEM -SPECIAL APP#1

VIDEO INTERCOM ENTRY CONTROL (EC) SYSTEM COMPONENTS TABLE				
Application:	**Model / Skew #'s:**	**Description:**	**Qty:**	**Notes:**
Primary Entrance and/or Secondary Egress Doors	IXG-DM7-HIDA	Aiphone - IXG System Door-Entrance Station (with mounting bracket)	1 Ea	See Note 1, 2, 3, 4, 5.
Door-Entrance Station Mount	SBX-IXGDM7	Aiphone - Surface Mount Box, Includes Rain Hood	1 Ea	
Keypad	DK-26 SS	Securitron - Keypad with CPU Board/Controller	1 Ea	**Optional** Rear Egress Only See Note 4, 11
Each Military Service Space	IXG-2C7	Aiphone - Desk-Tenant Station	1 Ea	See Note 1, 6
Each Military Service Space	MCW-S/B	Aiphone - Desk-Tenant Station – Stand	1 Ea	Per Desk-Tenant Station
Security Board	IXG-MAA	Aiphone - Network Door Release Relay Adaptor	1	Selective door release (allows Military Services to release specific doors)
	IXG-MK	Aiphone - Guard Station (includes flush mount kit)	1	See Note 12
	FPO250-C8D8E2	LSP - Power Supply (hardwired on security board)	1	8 Door / 8 Lock, 20A, 12VDC
Primary Entrance Doors	DPS-M-GY	Securitron - Door Position Switch (Magnetic)	Ea	Use DPS-W-GY for Wood Doors. Only required for shared / common area egress doors.
Security Board (in Security Cabinet)	GS752TPP-300NAS	NETGEAR – 48 Port **Primary** PoE+ Switch	Ea	48 Port (expandable with another 24 or 48 port switch)
Security Board (in Security Cabinet)	GS524UP-100NAS	NETGEAR – 24 Port **Optional / Secondary** PoE++ Switch	Ea	24 Port PoE++ Switch (See Note 5)

VIDEO INTERCOM ENTRY CONTROL (EC) NOTES:

1) REQUIRED FOR CONTRACTORS:

a. Contractor MUST complete questionnaire form for Aiphone custom program configuration file, which will be provided to the contractor for each office via email.

b. Programming design questionnaire forms & information to be completed at: **https://www.aiphone.com/support/technical-support/aiphone-programming-questionnaire**

2) See **https://www.aiphone.com/products/ixg-series** for IXG specifics and **recruitingcenters@aiphone.com** for installation details / questions at recruiting centers.

3) Certified Integrators / Installers (warranty):

a. Aiphone - **https://www.aiphone.com/kbtopic/ix-series-integrations-hanwha**

b. Hanwha Vision STEP Partner - **https://hanwhavisionamerica.com/partner-portal/**

c. ASSA ABLOY (Rockwood, Securitron, Accentra, AdamsRite, and Pemko components) - **https://www.assaabloydss.com/en/support/installation-and-service-partners/certified-integrators**

4) Door release time range: Default of 5-10 seconds for all electrified doors / key pads (IXG, DK-26).

5) Door-entrance station cameras to be connected to the CCTV system **and shown on service specific open area television only.** These cameras and desk-tenant stations require a PoE+ Switch connection. **A license is needed to record door entrance station camera. Either recordability or viewability with be an option but not both.** If more than 48 ports (or PoE++ ports) are required, add on the optional / secondary PoE+ Switch.

6) **Door-entrance station mounting: If possible, mount door-entrance station on the side of the mullion flush to the exterior window. Purpose would be to try to limit the ability for the entrance station from being pulled off of the storefront**.

7) Desk-tenant stations to be installed in each Military Service facility (minimum of 2, maximum of 8) for each Military Service recruiter identified in paragraph A.4. **See Air Force Attachment "4a" for their desk-station requirements. Optional wall mounted desk-tenant s**tations should be placed free and clear of all Military Service accent walls (as identified on **approved floor plan / AE drawings**). Wall Outlet (yellow data port jack) to desk-tenant station shall include an eight (8) foot yellow straight-through CAT 6 patch wire. In rare cases (as directed by a COE representative or on the approved floor plan / AE drawings) a wall mount for desk-tenant stations may be necessary (wall mount model = IXG-FMK-2C7).

8) See paragraph G.7 for Door Hardware Schedule & release components.

9) All stranded low voltage wire (exit device, keypad, and door position switch) will be 18 AWG stranded wire with label / tag at each end for easy identification and troubleshooting. See ***ENCLOSURE #6a, 6b, 6c, and 6d*** for EC example components, wiring and layout diagrams.

10) See paragraph K. for PoE+ Switch & LSP Power supply requirements (hardwired on security board).

11) See communications paragraph E and ***ENCLOSURE #1a, 1b, 1c and 1d*** for locations and colors of data port jacks and CAT 6 wires.

12) No Public Access Secondary Doors: A secondary egress door that only Recruiting personnel use to enter the station. Typically, the public or potential recruits do not access thru this door. The "No public access doors" only requires the Securitron DK-26 Keypad with controller (vs the Aiphone door-entrance station). **If the secondary egress is just an emergency only egress where no parties typically than neither the DK-26 or Aiphone door-station will be needed.**

13) Door position switches to activate **shared egress door(s)** chime(s). Primary shared egress doors shall have a single-tone (e.g. - "ding"), and secondary shared egress door(s) shall have two-tones (e.g. - "ding-dong").

ENCLOSURE #6a, 6b, 6c and 6d

GENERAL STANDARD (GS)

Video Intercom Entry Control (EC) - IXG System Wiring Diagrams & Example Setup

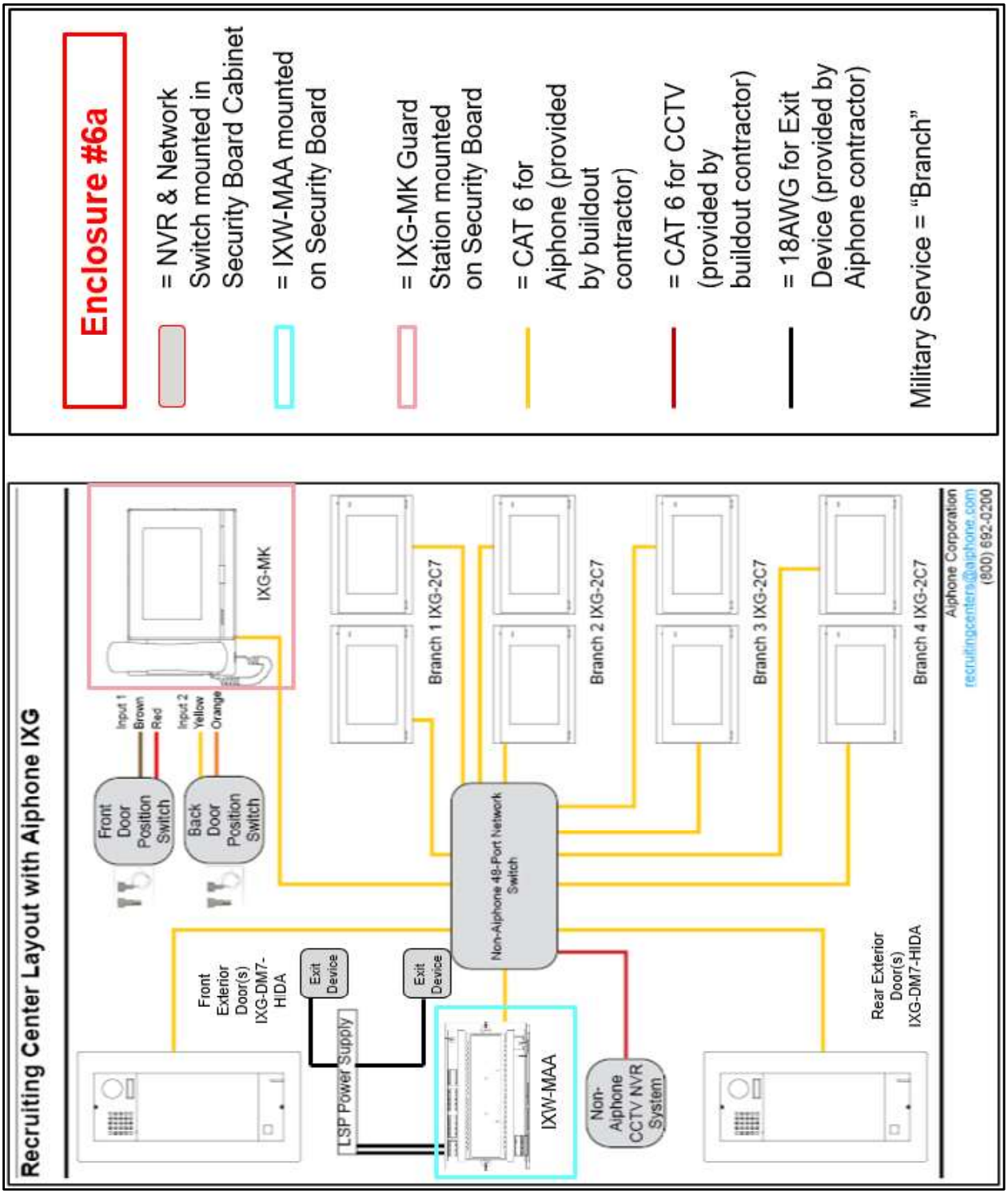

IXW-MAA

Multi-Purpose Adaptor for the IX Series

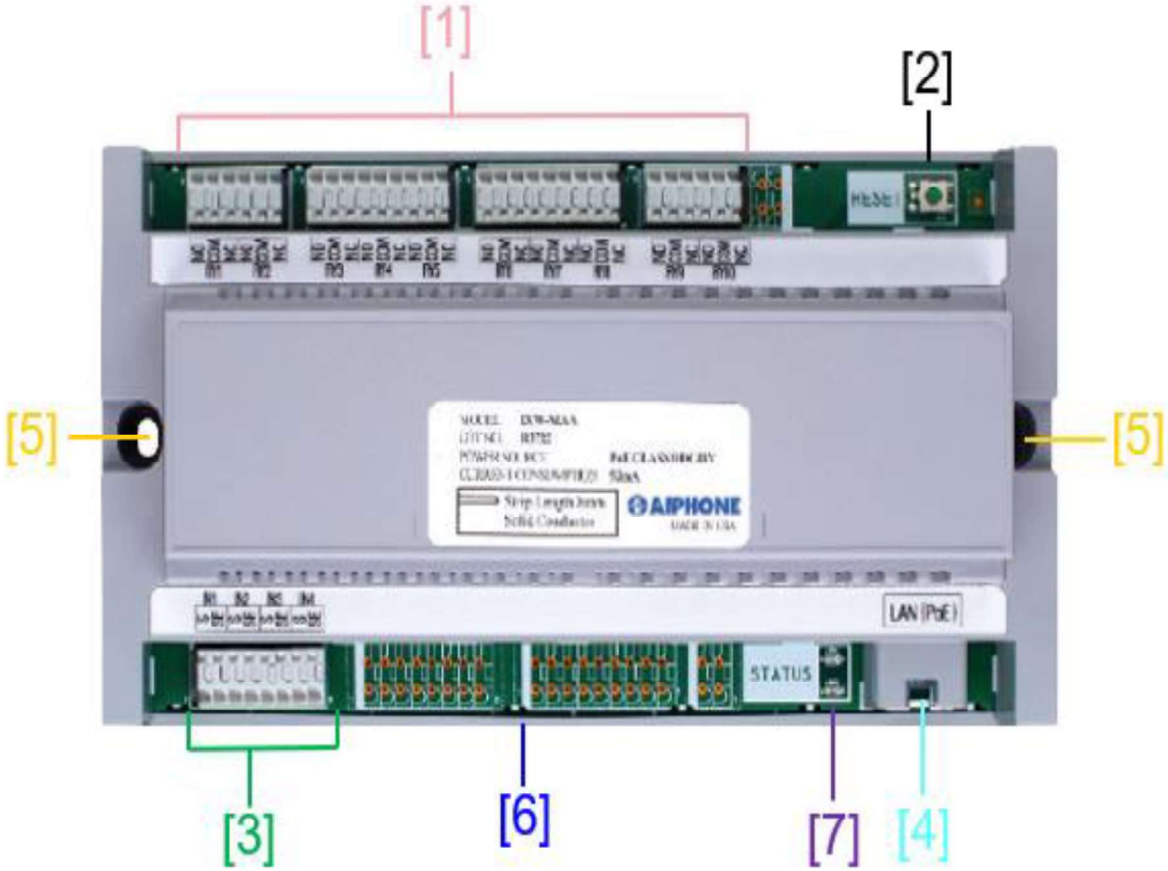

Feature Call-Out Definitions:

[1]: Contact Outputs 1 – 10

[2]: Reset Button

[3]: Contact Inputs 1 – 4

[4]: LAN Port

[5]: Mounting Point(s)

[6]: DIN Rail Mount (on back of adaptor)

[7]: Status Indicators

Enclosure #6b

Security Hardware / Application Requirements (EC & CCTV/NVR Systems): Contractor will advise the COE Representative on any unique site / office requirement(s) which will require any modifications to these specified security components.

a. **Off network / offline Hardware**.

b. **Certified Integrators / Installers (warranty):**

1. Aiphone - https://www.aiphone.com/kbtopic/ix-series-integrations-hanwha

2. Hanwha Vision STEP Partner - https://hanwhavisionamerica.com/partner-portal/

3. ASSA ABLOY (Rockwood, Securitron, Accentra, AdamsRite, and Pemko components) - https://www.assaabloydss.com/en/support/installation-and-service-partners/certified-integrators

c. EC and CCTV / NVR systems to be installed at the same time as they are integrated. Aiphone: IXG support tool file and IXG site specific configuration file to be loaded on the NVR (operating system drive).

d. **NVR Computer Bios / Auto Start**: Contractor to set / confirm NVR system BIOS settings are set to reboot automatically on power loss with MS Windows Auto Login (**NO** login password).

Bios instructions are as follows:

1. Power On the NVR and press "DEL" or "F1" or "F2" or "F10" to enter BIOS (CMOS) setup utility (the way to enter into BIOS Settings depends on the computer board manufacturer).

2. Inside BIOS menu, look under the following menus to find for a setting named "Restore on AC/Power Loss" or "AC Power Recovery" or "After Power Loss", "Advanced" or "ACPI" or "Power Management Setup".

3. Note: The "Restore on AC/Power Loss" setting can be found under different places inside BIOS setup according to computer manufacturer.

4. Set the "Restore on AC/Power Loss" setting to "Power On".

5. Save and exit from BIOS settings.

e. **Static IP Address Schedule:** Manually set / confirmed by contractor.

1. Network PoE+ Switch(s) = 192.168.1.1-25 range.

2. Aiphone = 192.168.1.100-199 range – pre-set by Aiphone programming file.

3. CCTV / NVR = 192.168.1.200-255 range.

f. **User IDs, Passwords and Door Access Codes:** **Contractor to coordinate with the COE Representative for setting / integrating user IDs, passwords, and temporary door access codes, including controlled distribution. Contractor to ONLY assist the Military Services facility managers / ATO's with programming the final door access codes**.

1. Both the Aiphone IXG and Hanwha CCTV/NVR systems each require two (2) user / login levels each:

i. Aiphone IXG Support Tool:

- Administrator for installer (Recruiters will not have access).
- Property Manager for facility managers / ATOs (Recruiters will not have access).

ii. Hanwha / Wisenet Device Manager (CCTV): With these predefined user roles.

- Owner for installer / facility managers / ATOs (Recruiters will not have access).
- Viewer for onsite Recruiters / personnel.

iii. **No MS Windows login passwords. Windows Auto Login only**.

2. **System User IDs & Passwords (EC, CCTV/NVR/Decoder, PoE+ Switch):** User IDs / passwords shall be reset from defaults and set / integrated to match / align with each other. Admin and Owner user login level(s) & passwords to be set / integrated to match / align with each login level for all systems. **Local Personnel / Recruiters will only have access to the Wisenet "Viewer" user.**

3. **Door Access Codes with Controlled Distribution:** Contractor to program **two (2) temporary and unique access codes for each Military Service present.** The EC door-entrance station(s) (e.g. – A4611), and optional Securitron DK-26 individual keypad(s) codes to match #'s (e.g. – 4611) if both units are present. Two (2) separate and unique access codes are necessary for each Military Service.

g. **Camera & Door-Entrance Station Tools (Torx Tool):** To be stored in a clear sleeve inside the Security cabinet at the Security Board.

h. **System Documentation for CCTV/NVR Setup & License Tracking by Contractor** (activated licenses for all cameras, EC door-entrance station cameras, etc.):

1. One copy of the system(s) hardware documentation / manuals / login details, and camera licenses are to be stored in a clear sleeve (along with the door-entrance station / camera tool (Torx tool) inside the Security cabinet at the Security Board.

2. **Save the following files on the NVR (operating system drive):**

i. Screen shots of all license keys and #'s **(email second copy to the COE representative)**.

ii. Create Wisenet project file with current date.

iii. Run Wisenet camera / encoder report "ALL" **(email second copy to the COE representative)**.

iv. Create camera config backup file.

i. **Printed Exporting Video Instructions:** Provide "how to" instructions on exporting video footage from NVR, via USB extension wire located next to keyboard. Printed instructions to be placed in clear plastic sleeve and mounted above NVR monitor on Security Board.

j. **System Training:**

1. A Training event will be scheduled and coordinated with the COE Representative for all Military Services / personnel (see paragraph A.4. for recruiter numbers). Installer(s) will submit to the COE a legible, dated roster with the trainer's contact information, each Trainee's name/rank, along with systems covered.

2. Minimum of a 1-hour training session MUST be provided as part of the installation by the contractor to ALL Military Services where the system(s) is installed.

3. **On-site training to use "temporary" door access codes with Military Service personnel. Temporary access codes to be deleted / reprogrammed by Service Facility Managers / ATO's after training is accomplished**.

4. The training will cover minimum items:

i. EC System:

- Individual Service access codes with controlled distribution to the Facility Manager / ATO.
- System Features and operation of door-entrance station(s), keypads, desk-tenant stations.
- RJ45 port and wire colors.
- How to disconnect and reconnect desk-tenant stations.
- Basic troubleshooting options / methods.
- Ensure door release time range is set to 5-10 seconds for electrified doors / keypads.

ii. CCTV/NVR/Decoder with monitor displays:

- Review camera placements and system features / settings.
- Adjust each camera and Military Branch display for optimal egress / camera views.
- What to do if the CCTV system shuts down, or display monitors stop displaying.
- Demonstrate automatic restart / reboot NVR and display monitors in each office.
- Discuss and provide location of printed "how to" instructions on exporting video footage from NVR.

iii. Facility Managers / ATO's: When present, detailed training for required (names / emails previously given by COE representative):

- Individual system software (Aiphone, Wisenet) instructional demo for logging in.
- Demonstrate features and operation on each system present.
- How to add/remove recruiter(s) door access code(s) on Aiphone IXG Support Tool and DK-26 control board.
- How to retrieve door entrance history / access control data from Aiphone IXG Support Tool.
- How to disconnect/reconnect desk-tenant stations.
- Demonstrate automatic reboot / restart on EACH System, basic trouble shooting options.
- How to search / retrieve / export data video from NVR.
- What to do if the CCTV system shuts down, or display monitors stop displaying.

Navy Recruiting Station located at 3300 Chambers Rd, Horseheads, NY

ITEM 0001B: INSTALL ADAMSRITE 8000 SERIES - ELECTRIFIED PUSHBAR, NEW LOCKSET WITH MOST UP-TO-DATE HARDWARE ON EXTERIOR SECONDARY EGRESS DOOR

1. **Install a brand-new Adamsrite 8000 series – electrified push-bar and new lockset with the most up to date hardware as listed below:**

Application:	Model / Skew #'s:	Description:	Size:	Finish:	Qty:	Set Codes:	Notes:
Exterior Secondary Egress Door	8701EL36-24	Adams Rite - Rim Exit Device	2-5/8" x 36"	Satin Aluminum	1	E3	⚡ Electrified - 3701-36 for fire rated doors
	A620-626	Yale – Cylinder Housing & Interchangeable Core	N/A	Satin Chrome	1		
	MS4043-00-130	Adams Rite - Guard Ring	N/A	Clear Anodized	1		
	4612-1	Adams Rite - Power Transfer	N/A	Chrome	1		⚡ Electrified
	BF158-630	Rockwood - Door Pull	1" x 12"	Satin SS	1		Match Existing building color
	3531-689	Yale - Automatic Door Closer	2-1/8" x 12"	Aluminum	1		
	BLP-210 (outswing)	DON-JO - Security Latch Guard (Anti-Pry Plate)	10" x 3.25" (outswing)	Match Existing	1		Conform to existing door configuration (e.g., offset, door handle, etc.)

Navy Recruiting Station located at 3300 Chambers Rd, Horseheads, NY

ITEM 0001C: INSTALL EXTERIOR JOINT PERFORATED WINDOW GRAPHICS (ONLY ON EXTERIOR STOREFRONT ENTRANCE

1. Exterior Signs Graphics General: Install Exterior Joint Perforated Window Wrap Graphics (Only on exterior main storefront entrance)

a. Perforated Window Wraps: The application of perforated window wraps is dependent upon the type of facility, along with other requirements. COE representative / Military Service(s) shall have control over what graphic is applied, what position the graphic will be placed and on which windows. Lessor / contractor will coordinate with the COE representative. ALL perforated window wraps to incorporate into the overall graphic a "**Weapons Prohibited**" graphic (8.5" W x 11" H) centered vertically on the door directly next to the handle (see below example and Box.com for the graphic file).

b. **Collocated with a Shared Entrance Door (JRFC Graphic):** When multiple Military Services are present and they share the same entrance door, a "JRFC Graphic" will be installed. **Perforated window wrap installations shall have 100% coverage of all exterior glass**, including common area windows (if applicable). If Military Service "exclusive" windows on the sides or rear of the premises (not front windows) are present, individual Military Service graphics can be applied to those windows (coordinate with the COE Representative). The JRFC Graphic image shown below is provided for reference purposes **ONLY**. This image will be included in a PDF "Style Guide" that the contractor **MUST** download with detailed instructions. The image needs to be **put together with specified materials and look as close to the below image as possible**. In the Style Guide, the black lines represent window / door mullions. ALL perforated window wraps to incorporate into the overall graphic a "**Weapons Prohibited**" graphic (8.5" W x 11" H)

centered vertically on the door directly next to the handle (see example and Box.com for the graphic file). The COE representative will provide a link and folder name for the contractor to download ALL appropriate files necessary (36 in total) to create / install the JRFC Graphic:

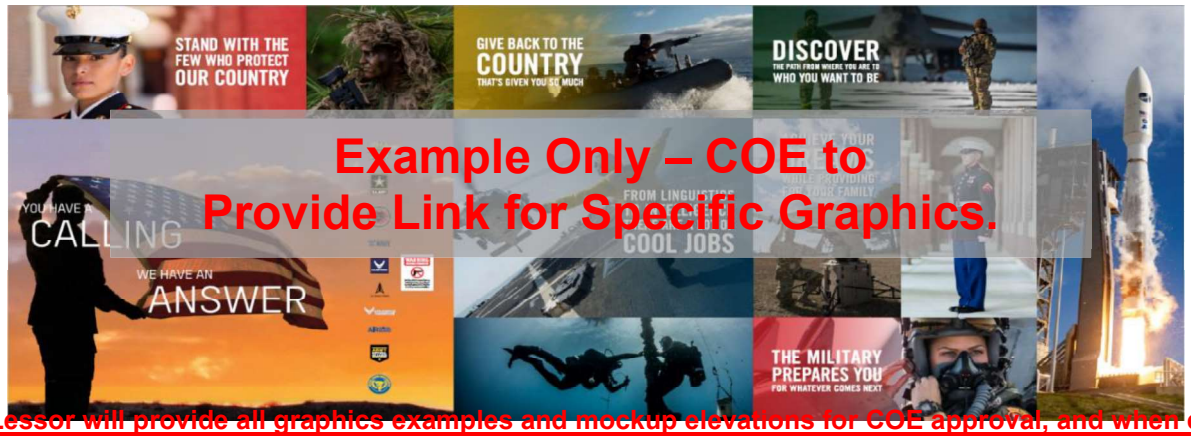

The Lessor will provide all graphics examples and mockup elevations for COE approval, and when chosen, provide final proofs and storefront elevation renderings of the approved graphics.

C. The approved graphic(s) shall meet the following standard(s) or equivalent on all storefront window wrap applications (including all manufacturer installation requirements MUST be followed, especially for temperatures, for the installation of all perforated exterior graphics):

a. 3M, 8170 – P40 (40% perforated), 4-mil, opaque, cast vinyl film with a high gloss finish.
b. Window graphic film will have a visual obscurity density of 60 / 40.
c. Apply 3M Scotchcal Optically Clear Gloss Overlaminate (8518) and shall be laminated prior to installation.
d. Apply 3M edge sealer tape 8914 at time of installation to all edges of the perforated film to prevent pealing.
e. The Lessor will coordinate with the Army Corps of Engineers (COE) representative regarding the correct graphic. The following are the types of graphics that might be installed at a location (as indicated in #1 and #2 above), and in rare cases both could be installed.
f. Military Service Individual Graphics (Stand-alone OR Collocated with separate entrance doors).
g. JRFC Graphic (Collocated with shared entrance door for all Military Services).

Note: Only the COE representative will make the final decision on the approved graphics.

Navy Recruiting Station located at 3300 Chambers Rd, Horseheads, NY

ITEM 0001D: REPAIR DUAL ROLLER SHADES THAT ARE NOT WORKING PROPERLY

~~1.~~ **Roller Shades:** ALL exterior windows shall have roller shades installed. WHEN INSTALLED, SHADES SHALL NOT ALLOW FOR ANY VISUAL GAPS.

a. **Roller Shades (windows only):** The Lessor will coordinate with the COE as to whether single roller shades are required. Single or Dual shades to be Hunter Douglas Architectural, Contract Roller Shade: Model #RB500 or equivalent. Fascia & End Cap finishes to be "anodized aluminum". These shades will not require military logos. To ensure a uniform appearance, all window shades will be motorized, with an appropriate electric wall keypad / switch control(s) for multiple shades, as identified on the floor plan / AE drawing (**installed at the front and rear of each Military Service facility**). Each switch / keypad to be labeled. **NOTE: BATTERY OPERATED KEYPADS ARE NOT ALLOWED**. Roller Shade couplers will be used to minimize the number of motors and electrical drop(s) required (up to 300" in length and/or 6 roller shades). **All electrical power to be hardwired within conduit inside walls.** Shades shall NOT be installed inside the window frame (in order to connect multiple roller shades together with a single motor). Motor to be, Sonesse Ultra model # 50 RA with a sound level equivalent to an office conversation. Installation shall be as per manufacturer's written instructions ~ to include all necessary blocking and structural supports. Shades to include the required number of Individual Group Control

(IGC) 4N1 motor controls (mounted above window, within ceiling, near front door when possible) with a HARDWIRED DecoFlex dry contact keypad / switch to be located at rear of space, by storage room door (as identified on floor plan / AE drawing). Shades will have a lifetime warranty and pass the NFPA 701 Small Scale test. If window(s) cannot be equipped with roller shades, either because of their unique shape and/or the inability to install the shade correctly, then only with expressed prior approval of the COE, a fixed panel shade shall be applied in accordance with fixed panel specifications below. If already installed, existing glass block requires no window covering. For wiring diagrams, see ***ENCLOSURES #4***.

b. **Dual Roller Shades (windows only):** Dual Roller shades will be installed when an exterior perforated window wrap IS NOT or WILL NOT be applied to the exterior windows. Shades to have both 'Sheer' and 'Privacy' fabrics. The 'Sheer Shade' shall be of a fabric equal to Hunter Douglas E Screen 3% White / White to be closest to the window. The 'Privacy Shade' shall be fabric equal to Hunter Douglas SheerWeave 7100-P12 Oyster. If the 7100 fabric is not available, the alternate fabric to be SheerWeave 7400 Cotton. Note: If a dual shade application is required, it may be necessary to install two individual shades if existing window conditions do not allow enough room to accommodate a dual shade bracket.

ENCLOSURE #4a, 4b, 4c, 4d and 4e
GENERAL STANDARD (GS)
Dual Roller Shade Wiring Diagrams

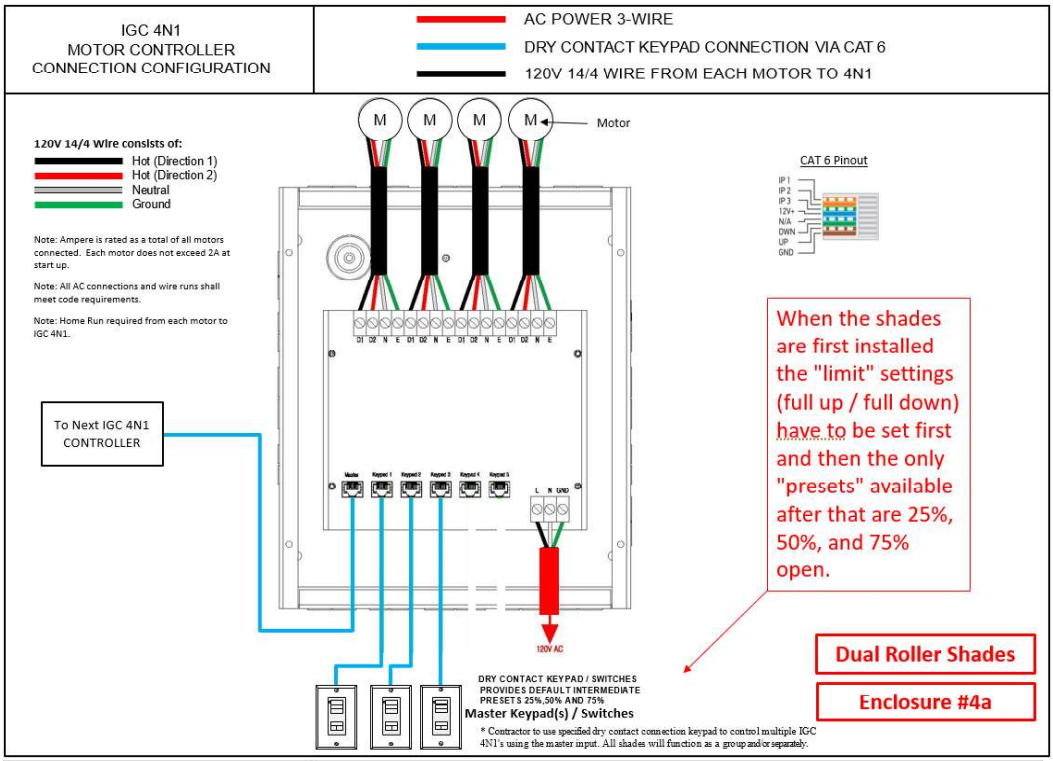
IGC 4N1
MOTOR CONTROLLER
CONNECTION CONFIGURATION
AC POWER 3-WIRE
DRY CONTACT KEYPAD CONNECTION VIA CAT 6
120V 14/4 WIRE FROM EACH MOTOR TO 4N1
M
M
M
M
Motor
120V 14/4 Wire consists of:
Hot (Direction 1)
Hot (Direction 2)
Neutral
Ground
Note: Ampere is rated as a total of all motors connected. Each motor does not exceed 2A at start up.
Note: All AC connections and wire runs shall meet code requirements.
Note: Home Run required from each motor to IGC 4N1.
CAT 6 Pinout
To Next IGC 4N1 CONTROLLER
When the shades are first installed the "limit" settings (full up / full down) have to be set first and then the only "presets" available after that are 25%, 50%, and 75% open.
120V AC
DRY CONTACT KEYPAD / SWITCHES PROVIDES DEFAULT INTERMEDIATE PRESETS 25%,50% AND 75%
Master Keypad(s) / Switches
* Contractor to use specified dry contact connection keypad to control multiple IGC 4N1's using the master input. All shades will function as a group and/or separately.
Dual Roller Shades
Enclosure #4a

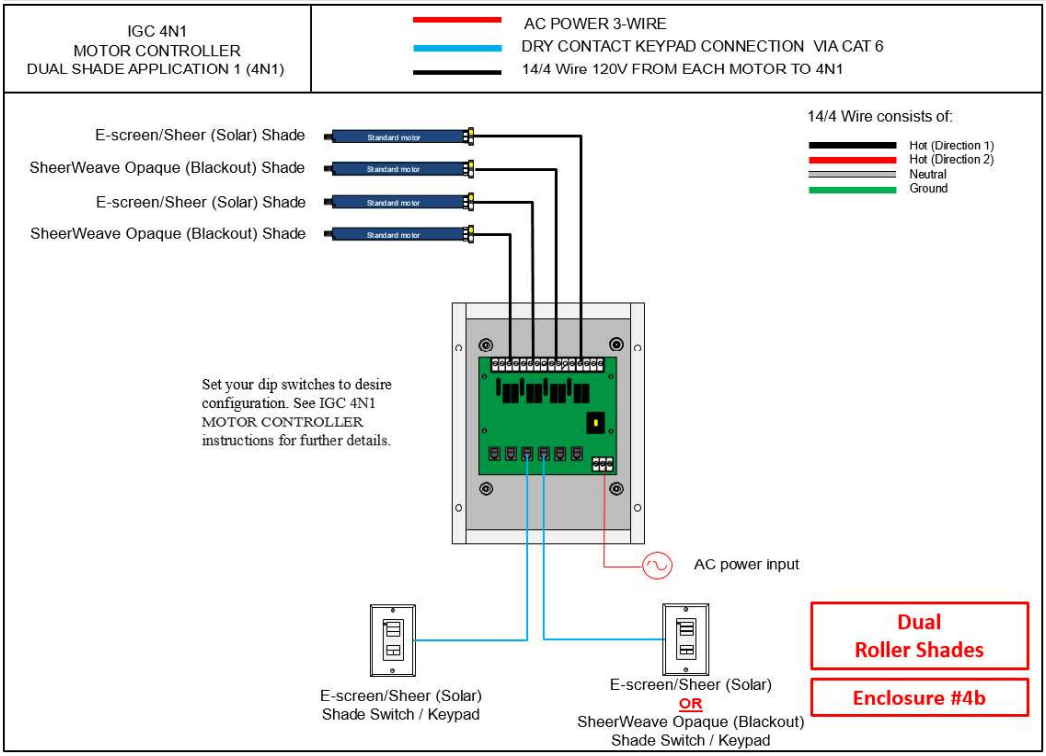
IGC 4N1
MOTOR CONTROLLER
DUAL SHADE APPLICATION 1 (4N1)
AC POWER 3-WIRE
DRY CONTACT KEYPAD CONNECTION VIA CAT 6
14/4 Wire 120V FROM EACH MOTOR TO 4N1
14/4 Wire consists of:
Hot (Direction 1)
Hot (Direction 2)
Neutral
Ground
E-screen/Sheer (Solar) Shade
SheerWeave Opaque (Blackout) Shade
E-screen/Sheer (Solar) Shade
SheerWeave Opaque (Blackout) Shade
Standard motor
Set your dip switches to desire configuration. See IGC 4N1 MOTOR CONTROLLER instructions for further details.
AC power input
E-screen/Sheer (Solar) Shade Switch / Keypad
E-screen/Sheer (Solar)
OR
SheerWeave Opaque (Blackout) Shade Switch / Keypad
Dual Roller Shades
Enclosure #4b

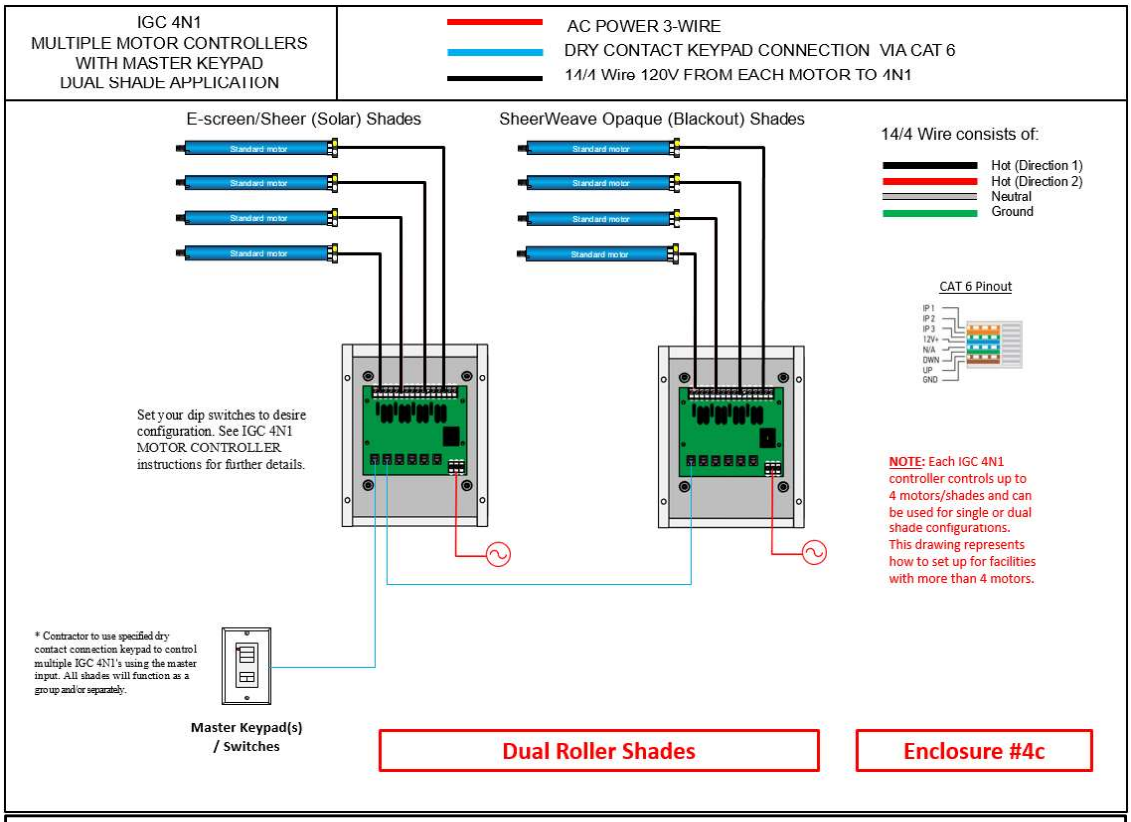
IGC 4N1
MULTIPLE MOTOR CONTROLLERS
WITH MASTER KEYPAD
DUAL SHADE APPLICATION
AC POWER 3-WIRE
DRY CONTACT KEYPAD CONNECTION VIA CAT 6
14/4 Wire 120V FROM EACH MOTOR TO 4N1
E-screen/Sheer (Solar) Shades
SheerWeave Opaque (Blackout) Shades
Standard motor
14/4 Wire consists of:
Hot (Direction 1)
Hot (Direction 2)
Neutral
Ground
CAT 6 Pinout
IP1
IP2
IP3
12V+
N/A
DWN
UP
GND
Set your dip switches to desire configuration. See IGC 4N1 MOTOR CONTROLLER instructions for further details.
NOTE: Each IGC 4N1 controller controls up to 4 motors/shades and can be used for single or dual shade configurations. This drawing represents how to set up for facilities with more than 4 motors.
* Contractor to use specified dry contact connection keypad to control multiple IGC 4N1's using the master input. All shades will function as a group and/or separately.
Master Keypad(s) / Switches
Dual Roller Shades
Enclosure #4c

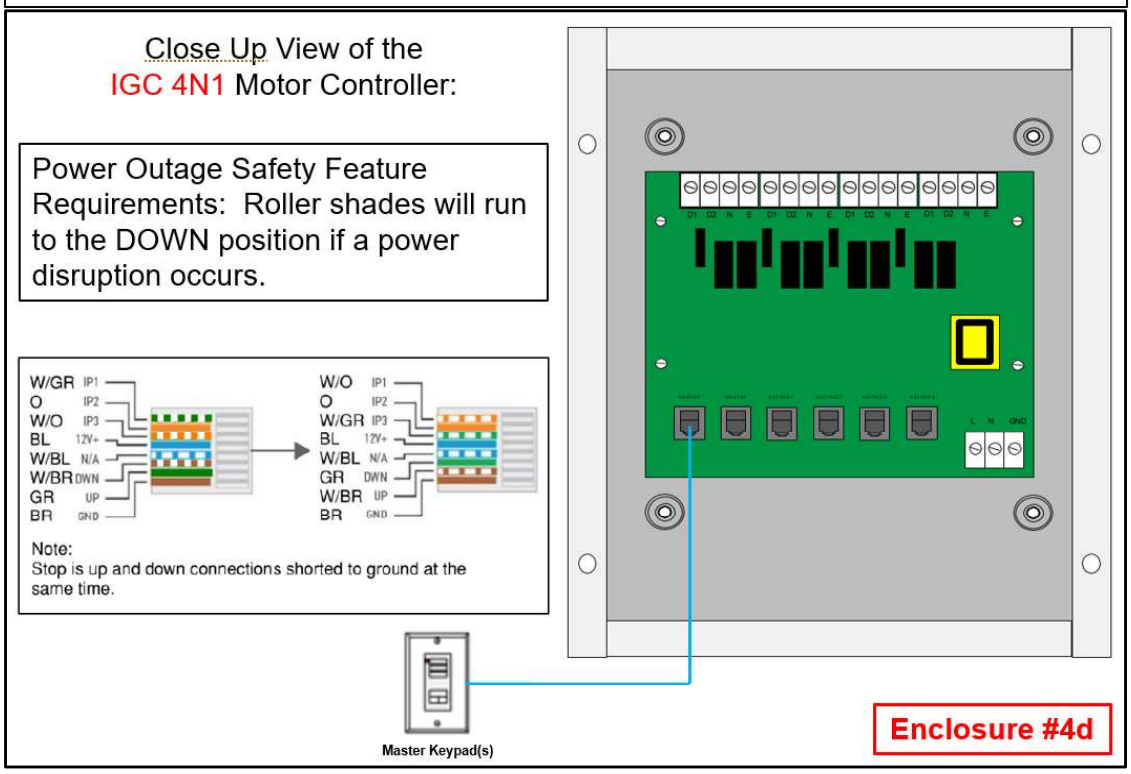
Close Up View of the
IGC 4N1 Motor Controller:
Power Outage Safety Feature Requirements: Roller shades will run to the DOWN position if a power disruption occurs.
W/GR IP1
O IP2
W/O IP3
BL 12V+
W/BL N/A
W/BR DWN
GR UP
BR GND
W/O IP1
O IP2
W/GR IP3
BL 12V+
W/BL N/A
GR DWN
W/BR UP
BR GND
Note:
Stop is up and down connections shorted to ground at the same time.
D1 D2 N E D1 D2 N E D1 D2 N E D1 D2 N E
L N GND
Master Keypad(s)
Enclosure #4d

ENCLOSURE #6a, 6b, 6c and 6d
GENERAL STANDARD (GS)
Video Intercom Entry Control (EC) - IXG System Wiring Diagrams & Example Setup

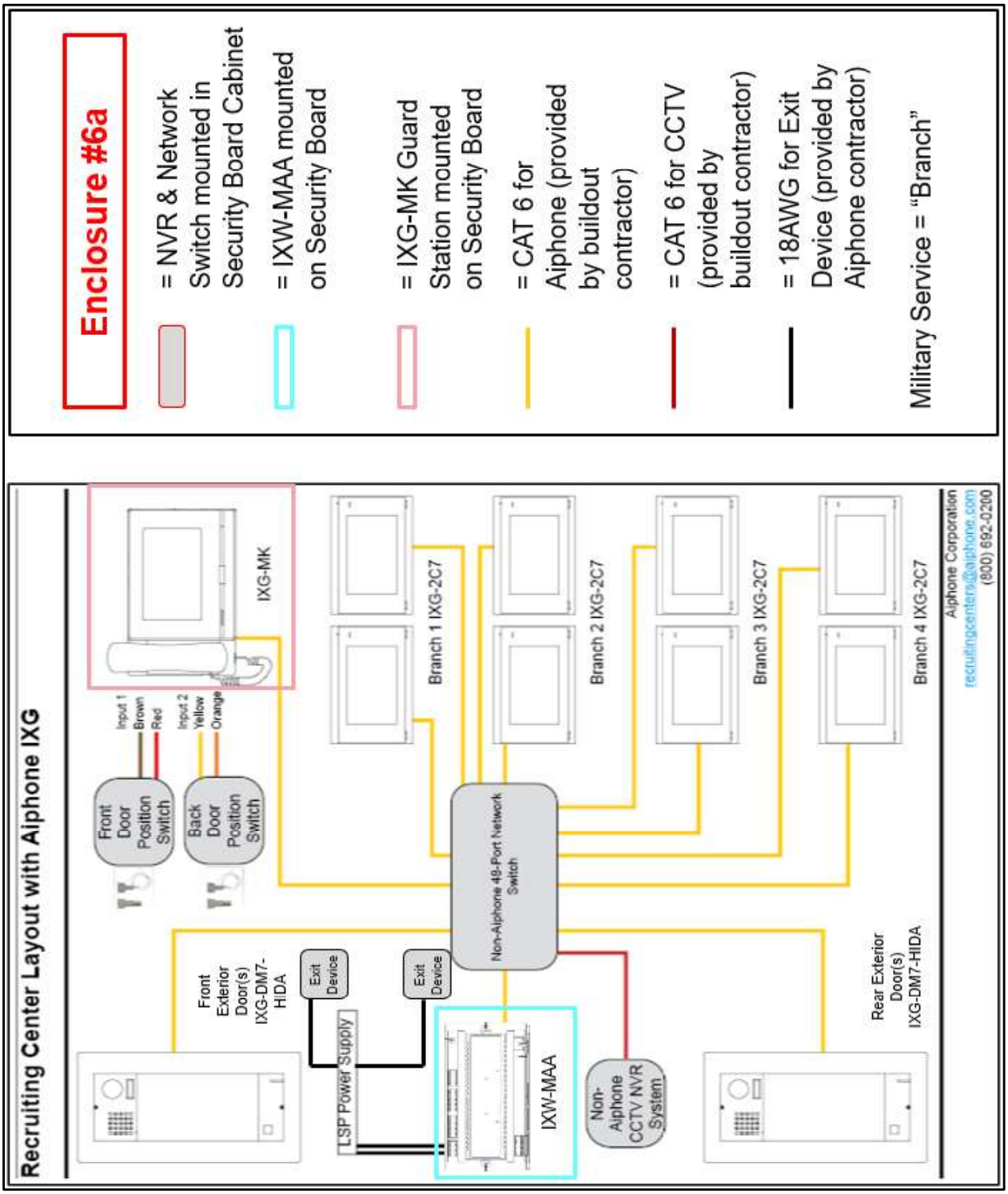
Enclosure #6a
= NVR & Network Switch mounted in Security Board Cabinet
= IXW-MAA mounted on Security Board
= IXG-MK Guard Station mounted on Security Board
= CAT 6 for Aiphone (provided by buildout contractor)
= CAT 6 for CCTV (provided by buildout contractor)
= 18AWG for Exit Device (provided by Aiphone contractor)
Military Service = "Branch"
Recruiting Center Layout with Aiphone IXG
IXG-MK
Input 1
Brown
Red
Input 2
Yellow
Orange
Front Door Position Switch
Back Door Position Switch
Branch 1 IXG-2C7
Branch 2 IXG-2C7
Branch 3 IXG-2C7
Branch 4 IXG-2C7
Non-Aiphone 48-Port Network Switch
Front Exterior Door(s) IXG-DM7-HIDA
Exit Device
Exit Device
LSP Power Supply
IXW-MAA
Non-Aiphone CCTV NVR System
Rear Exterior Door(s) IXG-DM7-HIDA
Aiphone Corporation
recruitingcenters@aiphone.com
(800) 692-0200

IXW-MAA

Multi-Purpose Adaptor for the IX Series

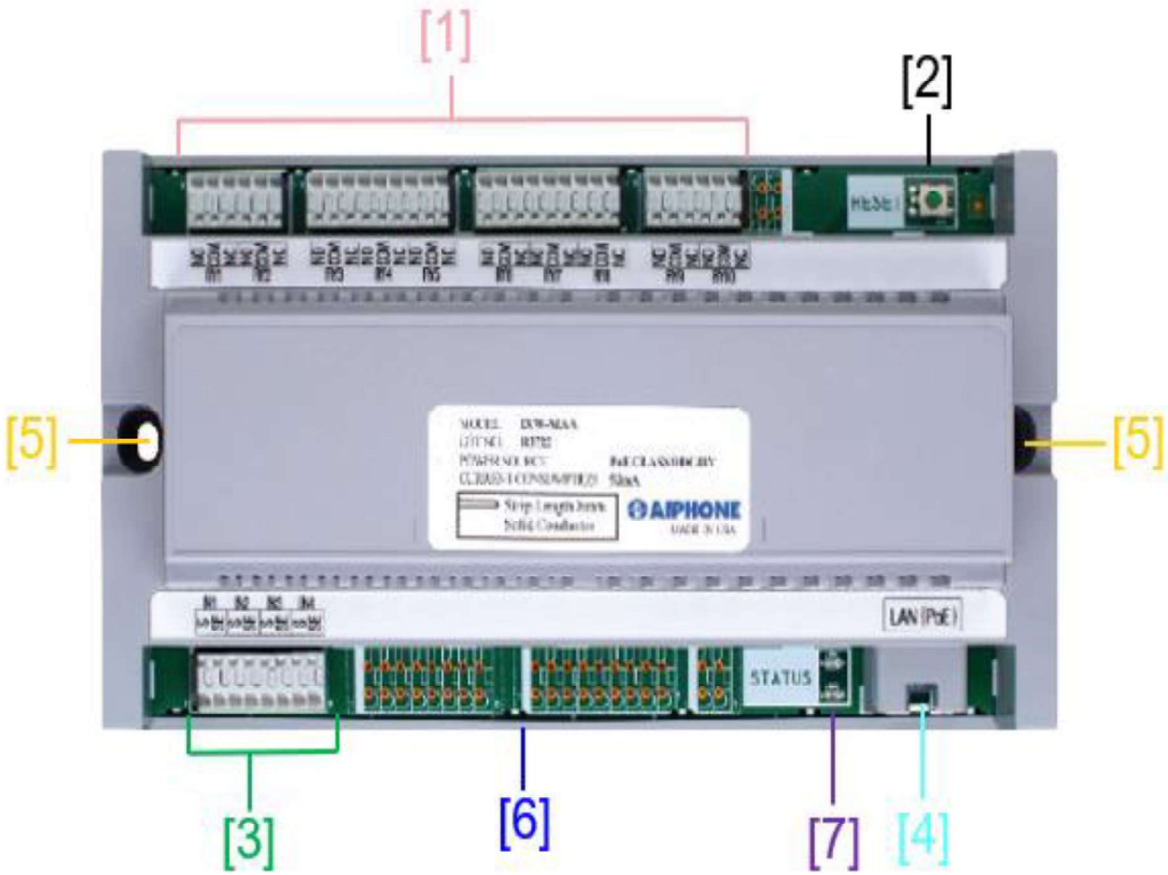

Feature Call-Out Definitions:

[1]: Contact Outputs 1 – 10

[2]: Reset Button

[3]: Contact Inputs 1 – 4

[4]: LAN Port

[5]: Mounting Point(s)

[6]: DIN Rail Mount (on back of adaptor)

[7]: Status Indicators

Enclosure #6b

Security Hardware / Application Requirements (EC & CCTV/NVR Systems): Contractor will advise the COE Representative on any unique site / office requirement(s) which will require any modifications to these specified security components.

k. **Off network / offline Hardware**.

l. **Certified Integrators / Installers (warranty):**

1. Aiphone - https://www.aiphone.com/kbtopic/ix-series-integrations-hanwha

2. Hanwha Vision STEP Partner - https://hanwhavisionamerica.com/partner-portal/

3. ASSA ABLOY (Rockwood, Securitron, Accentra, AdamsRite, and Pemko components) - https://www.assaabloydss.com/en/support/installation-and-service-partners/certified-integrators

m. EC and CCTV / NVR systems to be installed at the same time as they are integrated. Aiphone: IXG support tool file and IXG site specific configuration file to be loaded on the NVR (operating system drive).

n. **NVR Computer Bios / Auto Start**: Contractor to set / confirm NVR system BIOS settings are set to reboot automatically on power loss with MS Windows Auto Login (**NO** login password).

Bios instructions are as follows:

6. Power On the NVR and press "DEL" or "F1" or "F2" or "F10" to enter BIOS (CMOS) setup utility (the way to enter into BIOS Settings depends on the computer board manufacturer).

7. Inside BIOS menu, look under the following menus to find for a setting named "Restore on AC/Power Loss" or "AC Power Recovery" or "After Power Loss", "Advanced" or "ACPI" or "Power Management Setup".

8. Note: The "Restore on AC/Power Loss" setting can be found under different places inside BIOS setup according to computer manufacturer.

9. Set the "Restore on AC/Power Loss" setting to "Power On".

10. Save and exit from BIOS settings.

o. **Static IP Address Schedule:** Manually set / confirmed by contractor.

4. Network PoE+ Switch(s) = 192.168.1.1-25 range.

5. Aiphone = 192.168.1.100-199 range – pre-set by Aiphone programming file.

6. CCTV / NVR = 192.168.1.200-255 range.

p. **User IDs, Passwords and Door Access Codes:** **Contractor to coordinate with the COE Representative for setting / integrating user IDs, passwords, and temporary door access codes, including controlled distribution. Contractor to ONLY assist the Military Services facility managers / ATO's with programming the final door access codes**.

1. Both the Aiphone IXG and Hanwha CCTV/NVR systems each require two (2) user / login levels each:

i. Aiphone IXG Support Tool:

- Administrator for installer (Recruiters will not have access).
- Property Manager for facility managers / ATOs (Recruiters will not have access).

ii. Hanwha / Wisenet Device Manager (CCTV): With these predefined user roles.

- Owner for installer / facility managers / ATOs (Recruiters will not have access).
- Viewer for onsite Recruiters / personnel.

iii. **No MS Windows login passwords. Windows Auto Login only**.

2. **System User IDs & Passwords (EC, CCTV/NVR/Decoder, PoE+ Switch):** User IDs / passwords shall be reset from defaults and set / integrated to match / align with each other. Admin and Owner user login level(s) & passwords to be set / integrated to match / align with each login level for all systems. **Local Personnel / Recruiters will only have access to the Wisenet "Viewer" user.**

3. **Door Access Codes with Controlled Distribution:** Contractor to program **two (2) temporary and unique access codes for each Military Service present.** The EC door-entrance station(s) (e.g. – A4611), and optional Securitron DK-26 individual keypad(s) codes to match #'s (e.g. – 4611) if both units are present. Two (2) separate and unique access codes are necessary for each Military Service.

q. **Camera & Door-Entrance Station Tools (Torx Tool):** To be stored in a clear sleeve inside the Security cabinet at the Security Board.

r. **System Documentation for CCTV/NVR Setup & License Tracking by Contractor** (activated licenses for all cameras, EC door-entrance station cameras, etc.):

1. One copy of the system(s) hardware documentation / manuals / login details, and camera licenses are to be stored in a clear sleeve (along with the door-entrance station / camera tool (Torx tool) inside the Security cabinet at the Security Board.

2. **Save the following files on the NVR (operating system drive):**

i. Screen shots of all license keys and #'s **(email second copy to the COE representative)**.

ii. Create Wisenet project file with current date.

iii. Run Wisenet camera / encoder report "ALL" **(email second copy to the COE representative)**.

iv. Create camera config backup file.

s. **Printed Exporting Video Instructions:** Provide "how to" instructions on exporting video footage from NVR, via USB extension wire located next to keyboard. Printed instructions to be placed in clear plastic sleeve and mounted above NVR monitor on Security Board.

t. **System Training:**

1. A Training event will be scheduled and coordinated with the COE Representative for all Military Services / personnel (see paragraph A.4. for recruiter numbers). Installer(s) will submit to the COE a legible, dated roster with the trainer's contact information, each Trainee's name/rank, along with systems covered.

2. Minimum of a 1-hour training session MUST be provided as part of the installation by the contractor to ALL Military Services where the system(s) is installed.

3. **On-site training to use "temporary" door access codes with Military Service personnel. Temporary access codes to be deleted / reprogrammed by Service Facility Managers / ATO's after training is accomplished**.

4. The training will cover minimum items:

i. EC System:

- Individual Service access codes with controlled distribution to the Facility Manager / ATO.
- System Features and operation of door-entrance station(s), keypads, desk-tenant stations.
- RJ45 port and wire colors.
- How to disconnect and reconnect desk-tenant stations.
- Basic troubleshooting options / methods.
- Ensure door release time range is set to 5-10 seconds for electrified doors / keypads.

ii. CCTV/NVR/Decoder with monitor displays:

- Review camera placements and system features / settings.
- Adjust each camera and Military Branch display for optimal egress / camera views.
- What to do if the CCTV system shuts down, or display monitors stop displaying.
- Demonstrate automatic restart / reboot NVR and display monitors in each office.
- Discuss and provide location of printed "how to" instructions on exporting video footage from NVR.

iii. Facility Managers / ATO's: When present, detailed training for required (names / emails previously given by COE representative):

- Individual system software (Aiphone, Wisenet) instructional demo for logging in.
- Demonstrate features and operation on each system present.
- How to add/remove recruiter(s) door access code(s) on Aiphone IXG Support Tool and DK-26 control board.
- How to retrieve door entrance history / access control data from Aiphone IXG Support Tool.
- How to disconnect/reconnect desk-tenant stations.
- Demonstrate automatic reboot / restart on EACH System, basic trouble shooting options.
- How to search / retrieve / export data video from NVR.
- What to do if the CCTV system shuts down, or display monitors stop displaying.

Marines Recruiting Station located at 3300 Chambers Rd, Horseheads, NY

ITEM 0001E: REPLACE EAGLE, GLOBE AND ANCHOR (EGA) VINYL GRAPHIC AND WORDMARK "MARINES" VINYL GRAPHIC AND REPLACE MARINES ENTRY DOOR WITH TRIM

1. Interior Signage Graphics General: Replace Eagle, Globe and Anchor (EGA) Vinyl Graphic EXHIBIT "B"

Marine Corps Wall Graphics

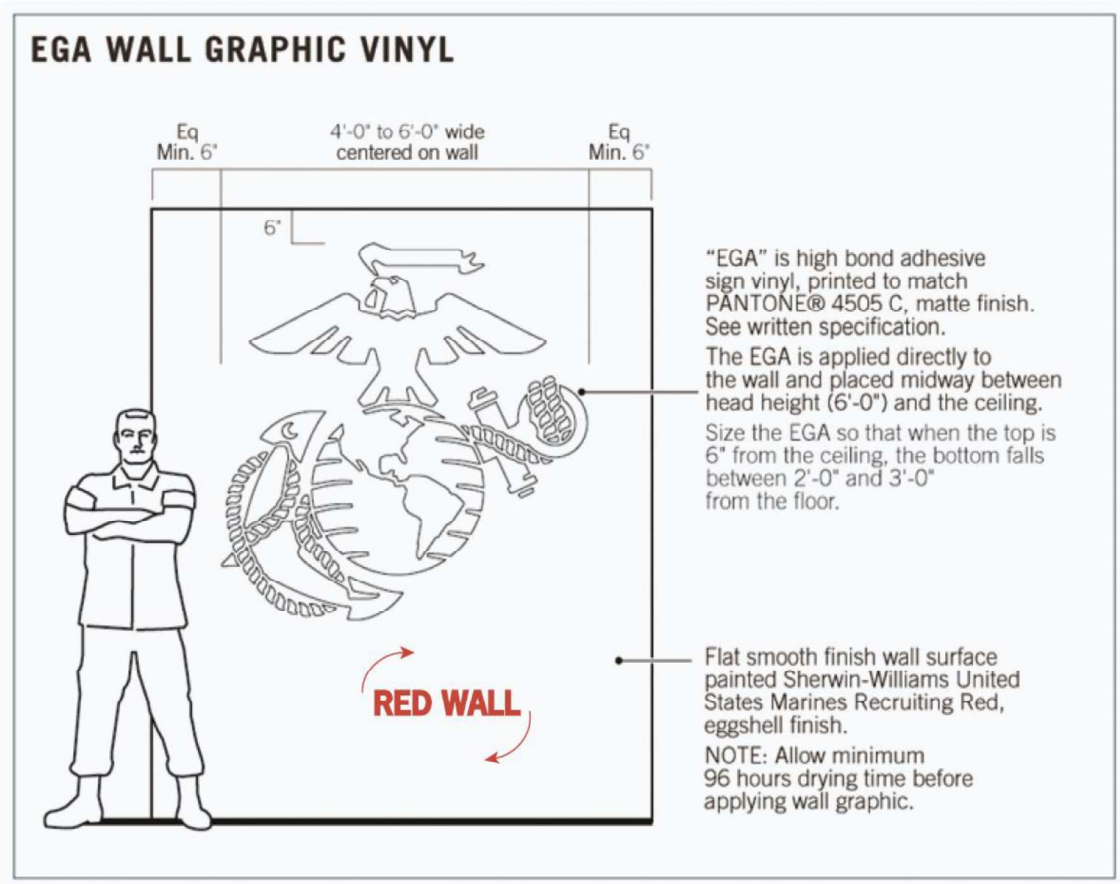

"EGA" wall graphic is always placed on a **RED WALL**. It is surface-applied, self-adhesive vinyl, color to match PMS 4505c, matte finish, a dark yellow non-metallic color. Approved EGA Symbol Printed Vinyl: 3M 180CV3-10 opaque white vinyl surface ink jet print to match PMS 4505c (dark yellow color) adjust as needed for accurate match to PMS 4505. Surface laminated with 3M 8520 UV resistant matte clear overlay.

Alternate manufacturers (e.g., Arlon, Avery, GSP, OraCal, LG or other) sign vinyl materials equivalent to 3M 180 Series, rated for high bond wall application, and the minimum outdoor use 5-year warranty may be provided based on contractor recommendation.

Alternate EGA Symbol Color Vinyl Recommendation: Arlon 2100-3669 Olive, matt finish opaque vinyl.

It is to be scaled as large as possible with the top of the EGA high on the wall. Generally, the bottom is no more 3'-0" above the floor. If placed on a large wall where no fixtures or furniture will block it, the EGA should be made larger with the bottom
closer to the floor.

Note 1: Red and blue walls require a minimum of four days (96 hours) for complete curing and drying time before application of vinyl wall graphics can occur. Paint drying time will be extended in cool or cold climates. Graphics contractor is to be advised of this requirement.
Note 2: Wall mounted fixtures such as thermostats, wall switches, emergency lighting, and light sensors, etc., should be placed free and clear of all Military Service accents walls.

2. <u>Interior Signage Graphics General: Replace Wordmark "Marines" Vinyl Graphic</u>

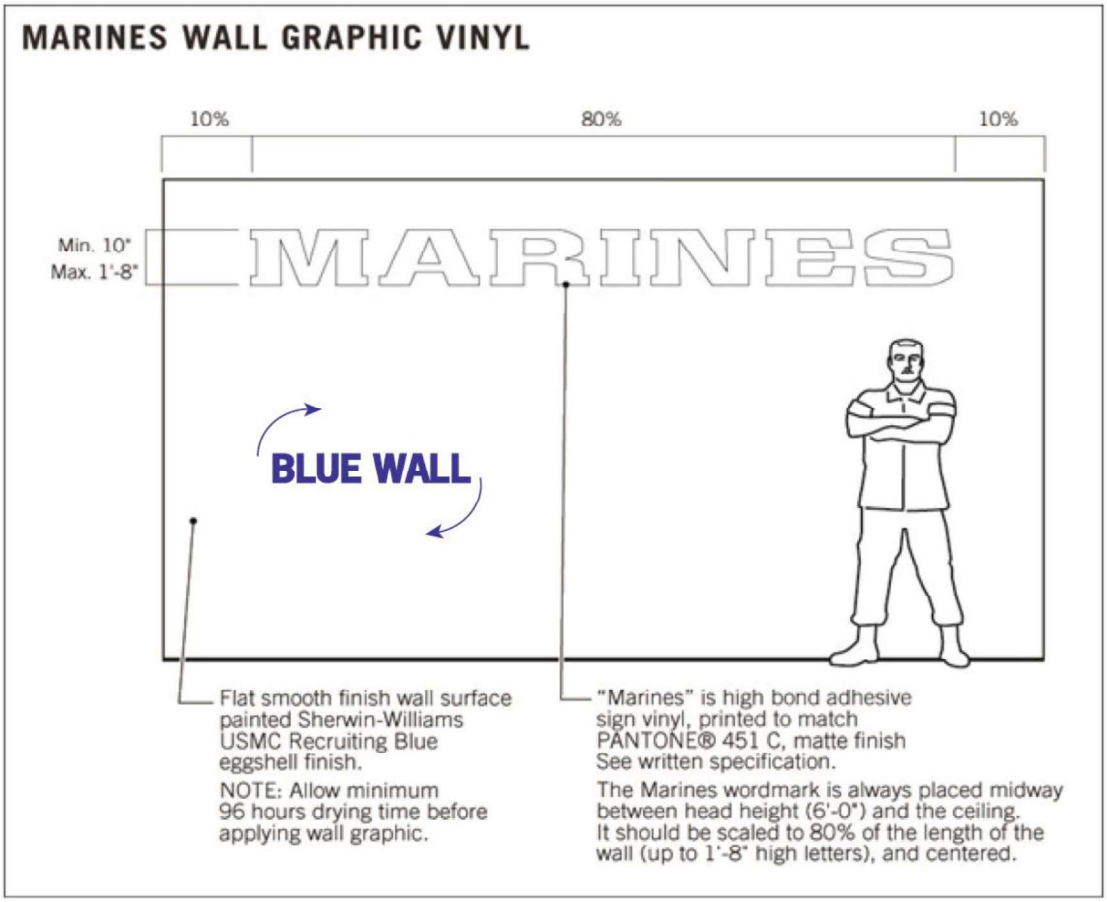

"MARINES" wall graphic is always placed on a large **BLUE WALL**. It is surface-applied, self-adhesive vinyl, color to PANTONE 451C, matte finish, a dark beige non-metallic color. Approved MARINES Wordmark Printed Vinyl: 3M 180CV3-10 opaque white vinyl, surface ink jet print to match PMS 451c (dark beige color) adjust as needed for accurate match to PMS 451. Surface laminated with 3M 8520 UV resistant matte clear overlay.

Alternate manufacturers (e.g., Arlon, Avery, GSP, OraCal, LG or other) sign vinyl materials equivalent to 3M 180 Series, rated for high bond wall application, and with minimum outdoor use 5-year warranty may be provided based on contractor recommendation. Alternate MARINES Wordmark Color Vinyl Recommendation: Arlon 2100-3670 Beige, matt finish opaque vinyl.

The "Marines" graphic is always placed midway between head height (6'-0") and the ceiling. It should be scaled to 80% of the length of the wall (up to 1'-8" H letters), and centered. The proportions of the provided "MARINES" artwork shall not be changed.

Note 1: Where length of walls exceed standards referenced above use <u>Rule of Thumb</u>: The letter height of the "MARINES" Wordmark should never grow so large that you can't leave clear space above and below "MARINES" equal to the height of the letters, as measured from the work station panels to the ceiling.
Note 2: Wall mounted fixtures such as thermostats, wall switches, light sensors, emergency lighting, etc., should be placed free and clear of all Military Service accents walls.

-

<u>INSTALL EXTERIOR JOINT PERFORATED WINDOW GRAPHICS (ONLY ON EXTERIOR STOREFRONT ENTRANCE</u>

2. Exterior Signs Graphics General: Install Exterior Joint Perforated Window Wrap Graphics (Only on exterior main storefront entrance)

d. Perforated Window Wraps: The application of perforated window wraps is dependent upon the type of facility, along with other requirements. COE representative / Military Service(s) shall have control over what graphic is applied, what position the graphic will be placed and on which windows. Lessor / contractor will coordinate with the COE representative. ALL perforated window wraps to incorporate into the overall graphic a "**Weapons Prohibited**" graphic (8.5" W x 11" H) centered vertically on the door directly next to the handle (see below example and Box.com for the graphic file).

e. **Collocated with a Shared Entrance Door (JRFC Graphic):** When multiple Military Services are present and they share the same entrance door, a "JRFC Graphic" will be installed. **Perforated window wrap installations shall have 100% coverage of all exterior glass**, including common area windows (if applicable). If Military Service "exclusive" windows on the sides or rear of the premises (not front windows) are present, individual Military Service graphics can be applied to those windows (coordinate with the COE Representative). The JRFC Graphic image shown below is provided for reference purposes **ONLY**. This image will be included in a PDF "Style Guide" that the contractor **MUST** download with detailed instructions. The image needs to be **put together with specified materials and look as close to the below image as possible**. In the Style Guide, the black lines represent window / door mullions. ALL perforated window wraps to incorporate into the overall graphic a "**Weapons Prohibited**" graphic (8.5" W x 11" H) centered vertically on the door directly next to the handle (see example and Box.com for the graphic file). The COE representative will provide a link and folder name for the contractor to download ALL appropriate files necessary (36 in total) to create / install the JRFC Graphic:

The Lessor will provide all graphics examples and mockup elevations for COE approval, and when chosen, provide final proofs and storefront elevation renderings of the approved graphics.

f. The approved graphic(s) shall meet the following standard(s) or equivalent on all storefront window wrap applications (including all manufacturer installation requirements MUST be followed, especially for temperatures, for the installation of all perforated exterior graphics):

a. 3M, 8170 – P40 (40% perforated), 4-mil, opaque, cast vinyl film with a high gloss finish.
b. Window graphic film will have a visual obscurity density of 60 / 40.
c. Apply 3M Scotchcal Optically Clear Gloss Overlaminate (8518) and shall be laminated prior to installation.
d. Apply 3M edge sealer tape 8914 at time of installation to all edges of the perforated film to prevent pealing.
e. The Lessor will coordinate with the Army Corps of Engineers (COE) representative regarding the correct graphic. The following are the types of graphics that might be installed at a location (as indicated in #1 and #2 above), and in rare cases both could be installed.
f. Military Service Individual Graphics (Stand-alone OR Collocated with separate entrance doors).
g. JRFC Graphic (Collocated with shared entrance door for all Military Services).

Note: Only the COE representative will make the final decision on the approved graphics.

Navy Recruiting Station located at 219 West 1st Street, Oswego, NY

ITEM 0002A: INSTALL INTERIOR WALL GRAPHICS

Interior Signage: GS w/guidance: The contractor shall order / install the Navy's "Training Graphic" and "Honor, Courage, Commitment Graphic" below. Graphics to be centered vertically between the ceiling and chair rail and horizontally scaled to 65% - 70% of the length of the wall. Each graphic is to be made as one-piece with the size of the graphic not to exceed 4' H x 18' L. COE representative to supply the Navy's wall graphic files. Lessor will coordinate with the COE on the installation of these self-adhesive, vinyl graphics or where applicable, rough-surface applications. Materials and instructions for installation are as follows:

a. Apply graphics to a flat smooth finish wall surface (after Navy paint is applied).
b. Allow paint a minimum of 7-10 days drying time before applying any wall graphics. Drying times will vary based on temperature and humidity.
c. Navy' wall graphic shall be printed on and surface-applied to the self-adhesive vinyl. Printed Vinyl: 3M 180CV3-10 opaque white vinyl, surface ink jet printed with the Navy' graphics. Surface laminated with 3M 8520 UV resistant matte clear overlay.
d. Alternate manufacturers (e.g., Arlon, Avery, GSP, OraCal, LG or other) sign vinyl materials equivalent to 3M 180 Series, rated for high bond wall application, and with minimum outdoor use 5-year warranty may be provided based on contractor recommendation.
e. **Note 1:** Wall mounted fixtures such as thermostats, wall switches, emergency lighting, and light sensors, etc., should be placed free and clear of all Military Service accents walls and graphics.
f. If selected, for expedited delivery-government pricing contact:

Manufacturer: Fastsigns, Inc.
POC: Chip Fullerton – General Manager.
Phone: (901) 725-7446
Email: 81@fastsigns.com

Model: 3M 180CV3-10 Opaque White Vinyl wall covering
Substrate: Equal to 3M 180CV3-10 Opaque White Vinyl wall covering or better.

Installation: Utilize manufacturers' recommended products in accordance with 3M 180CV3-10 Opaque White Vinyl wall covering installation instructions and surface preparation and adhesive guidelines. Clean the wall with a mixture of 70 percent isopropyl alcohol and 30 percent water. Do this two times. Cleaning with this mixture will increase adhesion on Low VOC paints. Lessor to install the graphics according to manufacturer' instructions in order to maintain their warranty requirements.

Graphics: a) "**Training Wall Graphic**" to be installed per approved floor plan / AE drawing:

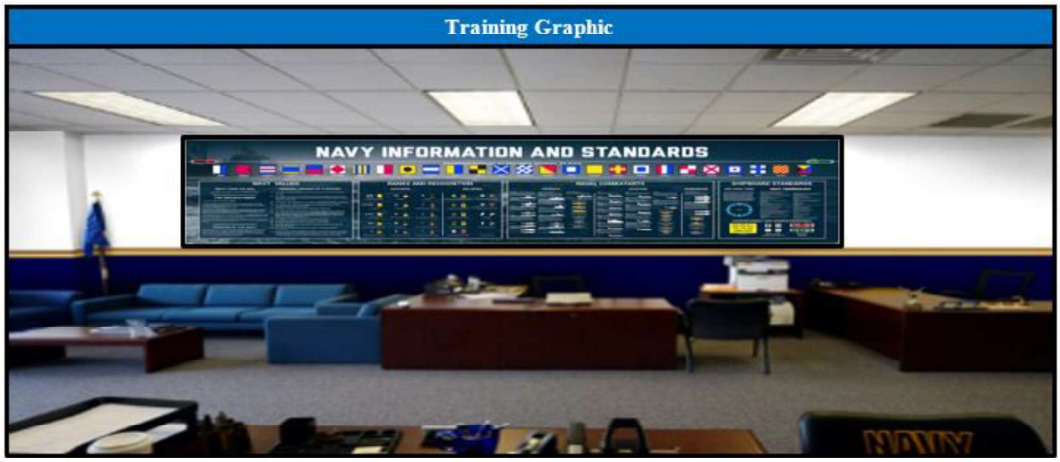

b) "**Honor, Courage, Commitment Wall Graphic**" to be installed per approved floor plan / AE drawing (opposite the Training Graphic):

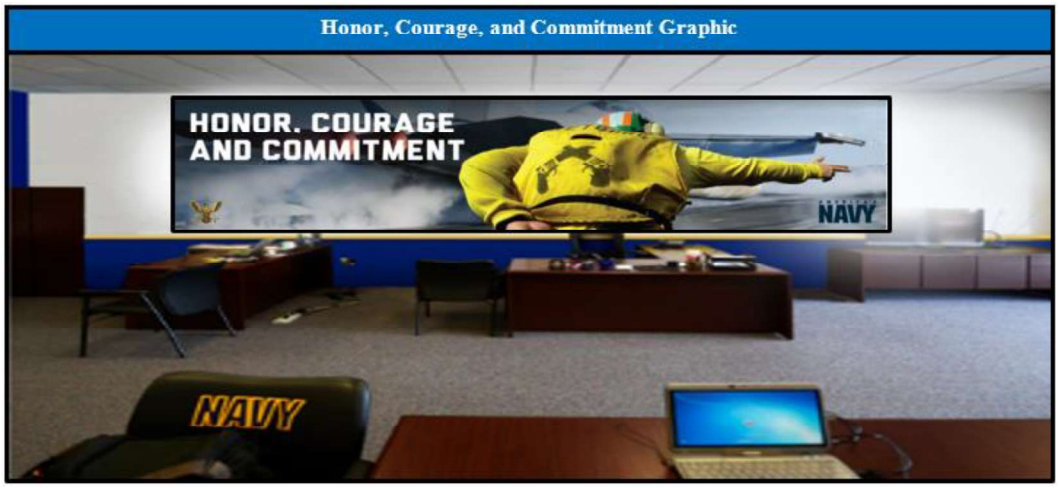

Navy Recruiting Station located at 219 West 1st Street, Oswego, NY

ITEM 0002B: Spot Replace Ceiling Tiles

1. **Military Service Space:** CCTV Display Monitors with Decoder:

a. Install One (1) Samsung DU8000 55" UHD LED Monitor: One (1) plus CCTV Display Monitors to be installed in the Navy
Recruiting Office open office area as marked on the floor plan for dedicated CCTV viewing, via the SPD-152 PoE decoder. Centered in open office area to allow maximum visibility by recruiters, minimize glare or bright sunlight (which reduces visibility). **NOT to be mounted near exterior windows.**

b. User IDs, Passwords and Door Access Codes: **Contractor to coordinate with the COE Representative for setting / integrating**
user IDs, passwords, and temporary door access codes, including controlled distribution. Contractor to ONLY assist the Military Services facility managers / ATO's with programming the final door access codes.

1. The CCTV/NVR system require two (2) user / login levels each:

i. Hanwha / Wisenet Device Manager (CCTV): With these predefined user roles.

1. Viewer for onsite Recruiters / personnel.

ii. **No MS Windows login passwords. Windows Auto Login only**.

~~2.~~ System User IDs & Passwords (EC, CCTV/NVR/Decoder, PoE+ Switch): User IDs / passwords

shall be reset from defaults and set / integrated to match / align with each other. Admin and Owner user login level(s) & passwords to be set / integrated to match / align
with each login level for all systems. **Local Personnel / Recruiters will only have access to the Wisenet "Viewer" user.**

ITEM 0006B: INSTALL ADAMSRITE 8000 SERIES - ELECTRIFIED PUSHBAR, NEW LOCKSET WITH MOST UP-TO-DATE HARDWARE ON EXTERIOR SECONDARY EGRESS DOOR

2. Install a brand-new Adamsrite 8000 series – electrified push-bar and new lockset with the most up to date hardware as listed below:

Application:	Model / Skew #'s:	Description:	Size:	Finish:	Qty:	Set Codes:	Notes:
Exterior Secondary Egress Door	8701EL36-24	Adams Rite - Rim Exit Device	2-5/8" x 36"	Satin Aluminum	1	E3	⚡ Electrified - 3701-36 for fire rated doors
	A620-626	Yale – Cylinder Housing & Interchangeable Core	N/A	Satin Chrome	1		
	MS4043-00-130	Adams Rite - Guard Ring	N/A	Clear Anodized	1		
	4612-1	Adams Rite - Power Transfer	N/A	Chrome	1		⚡ Electrified
	BF158-630	Rockwood - Door Pull	1" x 12"	Satin SS	1		Match Existing building color
	3531-689	Yale - Automatic Door Closer	2-1/8" x 12"	Aluminum	1		
	BLP-210 (outswing)	DON-JO - Security Latch Guard (Anti-Pry Plate)	10" x 3.25" (outswing)	Match Existing	1		Conform to existing door configuration (e.g., offset, door handle, etc.)

Air Force Recruiting Station located at 201 West 3rd Street, Jamestown, NY

ITEM 0003A: INSTALL CARPET TILES, INSTALL CHAIR RAIL, INSTALL INTERIOR WALL GRAPHICS

NAVY CARPET SCHEDULE	
Manufacturer / Style:	Shaw / U.S. Navy Recruiting Standard: # 800G3
Color (Name, Number):	Water Garden, 69400
Product:	Carpet Tile
Installation Method:	Monolithic (See Note #1)
Installation Adhesive:	"LokDots" Adhesive System
Note 1: Carpet tile installation to be installed monolithic with all arrows pointing in the left-direction upon walking into the entrance of the space.	
Note 2: If selected, for expedited delivery - government pricing contact: Shaw Contract for ALL inquiries go to website: **www.shawcontract.com/usrecruiting**. For pricing and order inquiries go to the pricing & ordering tab at the above website, or call: 1-800-356-7429 ext. 1 or email: **cs.gsa@shawinc.com**. For gener inquiries call Michele Leise, 402-968-6025, email: **michele.leise@shawcontract.com**	

Base Cove (for VCT & Carpet only): Johnsonite / Tarkett (**https://distributor.tarkett.com**), Rubber; Color: #40, Black, 4" H.

Flooring - General parameters: All floor areas will be of a common level, finished in a specified material and have a minimum live-load capacity of 50 pounds per square foot.

a. Porcelain Tiles: See ***ENCLOSURE #2***, ***including ordering instructions***, for a typical floor tile pattern, including tile color / name, grout color / name, and tile transition designations. See specific Military Service Attachment for their requirement.

1. **Common Hallway / Corridor / Security Closets and Restroom Areas:** Porcelain tile with unpolished, non-slip surface shall be installed in the hallways, corridors, security closets, and restroom area floors.

b. Chair Rail: Shall be installed on common area walls, excluding restrooms, and as referenced on the individual, Military Services' finish schedule and approved floor plan / AE drawing. Chair rail to be mounted at bottom edge, 30" AFF, with semi-gloss paint finish. Profile to be Alexandria Molding: AMH 300 1-1 / 16" x 3", primed finger-jointed pine chair rail molding. **See specific Military Services' Attachments for their specific requirements**. **Note:** Example of designated chair rail shown below:

Chair Rail

Interior Signage: GS w/guidance: The Lessor shall order / install the Navy's "Training Graphic" and "Honor, Courage, Commitment Graphic" below. Graphics to be centered vertically between the ceiling and chair rail and horizontally scaled to 65% - 70% of the length of the wall. Each graphic is to be made as one-piece with the size of the graphic not to exceed 4' H x 18' L. COE representative to supply the Navy's wall graphic files. Lessor will coordinate with the COE on the installation of these self-adhesive, vinyl graphics or where applicable, rough-surface applications. Materials and instructions for installation are as follows:

g. Apply graphics to a flat smooth finish wall surface (after Navy paint is applied).

h. Allow paint a minimum of 7-10 days drying time before applying any wall graphics. Drying times will vary based on temperature and humidity.

i. Navy' wall graphic shall be printed on and surface-applied to the self-adhesive vinyl. Printed Vinyl: 3M 180CV3-10 opaque white vinyl, surface ink jet printed with the Navy' graphics. Surface laminated with 3M 8520 UV resistant matte clear overlay.

j. Alternate manufacturers (e.g., Arlon, Avery, GSP, OraCal, LG or other) sign vinyl materials equivalent to 3M 180 Series, rated for high bond wall application, and with minimum outdoor use 5-year warranty may be provided based on contractor recommendation.

k. Note 1: Wall mounted fixtures such as thermostats, wall switches, emergency lighting, and light sensors, etc., should be placed free and clear of all Military Service accents walls and graphics.

I. If selected, for expedited delivery-government pricing contact:

Manufacturer: Fastsigns, Inc.
POC: Chip Fullerton – General Manager.
Phone: (901) 725-7446
Email: 81@fastsigns.com

Model: 3M 180CV3-10 Opaque White Vinyl wall covering
Substrate: Equal to 3M 180CV3-10 Opaque White Vinyl wall covering or better.

Installation: Utilize manufacturers' recommended products in accordance with 3M 180CV3-10 Opaque White Vinyl wall covering installation instructions and surface preparation and adhesive guidelines. Clean the wall with a mixture of 70 percent isopropyl alcohol and 30 percent water. Do this two times. Cleaning with this mixture will increase adhesion on Low VOC paints. Lessor to install the graphics according to manufacturer' instructions in order to maintain their warranty requirements.

Graphics: a) "**Training Wall Graphic**" to be installed per approved floor plan / AE drawing:

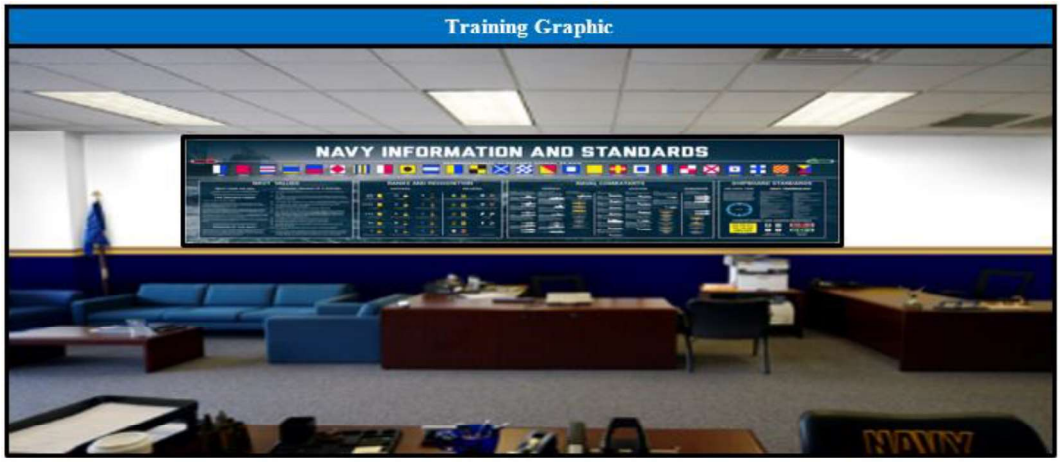

c) "**Honor, Courage, Commitment Wall Graphic**" to be installed per approved floor plan / AE drawing (opposite the Training Graphic):

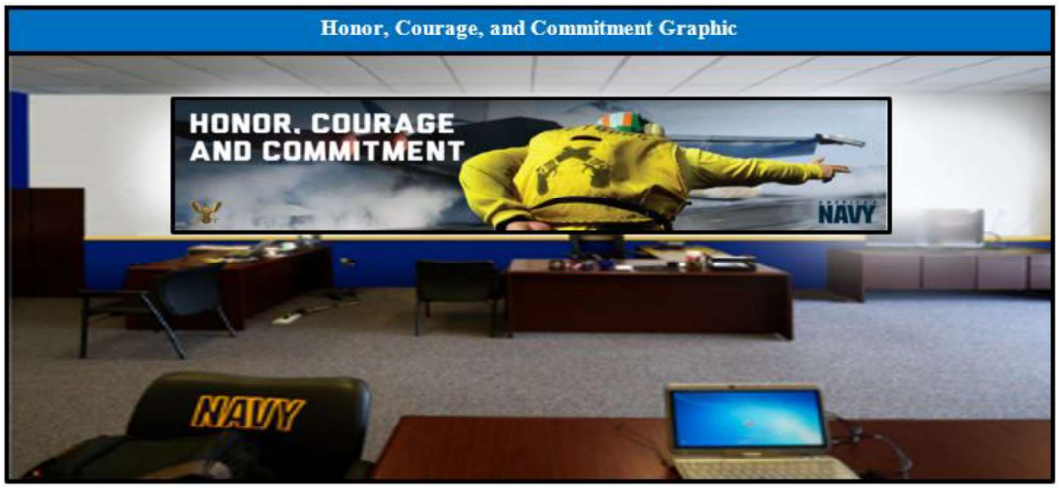

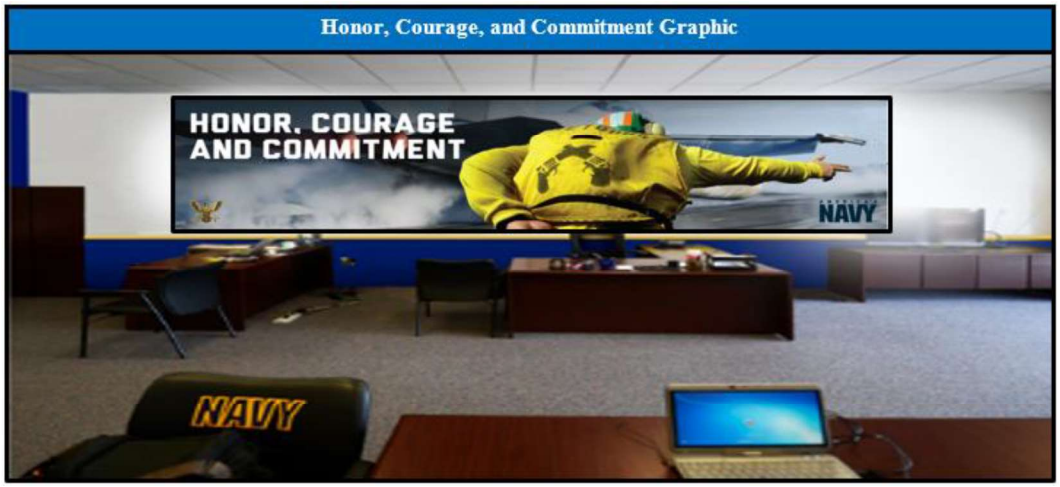

1. **Exterior Signs Graphics General:** Install Exterior Joint Perforated Window Wrap Graphics (Only on exterior main storefront entrance)

a. **Perforated Window Wraps:** The application of perforated window wraps is dependent upon the type of facility, along with other requirements. COE representative / Military Service(s) shall have control over what graphic is applied, what position the graphic will be placed and on which windows. Lessor / contractor will coordinate with the COE representative. ALL perforated window wraps to incorporate into the overall graphic a "**Weapons Prohibited**" graphic (8.5" W x 11" H) centered vertically on the door directly next to the handle (see below example and Box.com for the graphic file).

b. **Collocated with a Shared Entrance Door (JRFC Graphic):** When multiple Military Services are present and they share the same entrance door, a "JRFC Graphic" will be installed. **Perforated window wrap installations shall have 100% coverage of all exterior glass**, including common area windows (if applicable). If Military Service "exclusive" windows on the sides or rear of the premises (not front windows) are present, individual Military Service graphics can be applied to those windows (coordinate with the COE Representative). The JRFC Graphic image shown below is provided for reference purposes **ONLY**. This image will be included in a PDF "Style Guide" that the contractor **MUST** download with detailed instructions. The image needs to be **put together with specified materials and look as close to the below image as possible**. In the Style Guide, the black lines represent window / door mullions. ALL perforated window wraps to incorporate into the overall graphic a "**Weapons Prohibited**" graphic (8.5" W x 11" H) centered vertically on the door directly next to the handle (see example and Box.com for the graphic file). The COE representative will provide a link and folder name for the contractor to download ALL appropriate files necessary (36 in total) to create / install the JRFC Graphic:

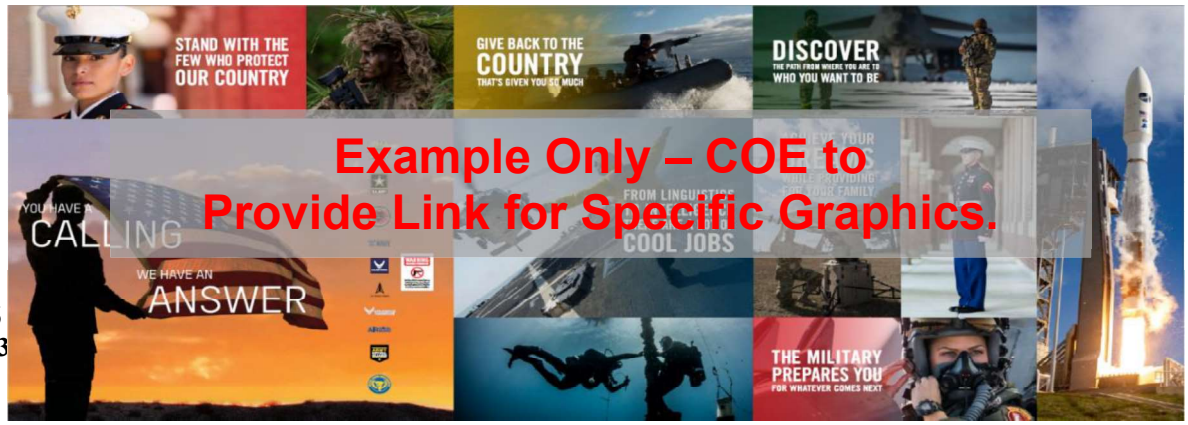

The Lessor will provide all graphics examples and mockup elevations for COE approval, and when chosen, provide final proofs and storefront elevation renderings of the approved graphics.

c. The approved graphic(s) shall meet the following standard(s) or equivalent on all storefront window wrap applications (including all manufacturer installation requirements MUST be followed, especially for temperatures, for the installation of all perforated exterior graphics):

a. 3M, 8170 – P40 (40% perforated), 4-mil, opaque, cast vinyl film with a high gloss finish.
b. Window graphic film will have a visual obscurity density of 60 / 40.
c. Apply 3M Scotchcal Optically Clear Gloss Overlaminate (8518) and shall be laminated prior to installation.
d. Apply 3M edge sealer tape 8914 at time of installation to all edges of the perforated film to prevent pealing.
e. The Lessor will coordinate with the Army Corps of Engineers (COE) representative regarding the correct graphic. The following are the types of graphics that might be installed at a location (as indicated in #1 and #2 above), and in rare cases both could be installed.
f. Military Service Individual Graphics (Stand-alone OR Collocated with separate entrance doors).
g. JRFC Graphic (Collocated with shared entrance door for all Military Services).

Note: Only the COE representative will make the final decision on the approved graphics.

Air Force Recruiting Station located at 3701 Vestal Parkway, Vestal, NY

ITEM 0004A: INSTALL INTERIOR MINI BLINDS ON ENTRANCE DOOR

1. Mini-Blinds: NOT TO BE INSTALLED ON ANY EXTERIOR WINDOWS OR DOORS.

a. Install Mini-Blinds (interior front entrance door only): All interior front entrance door shall be equipped with mini-blinds having non-corroding mechanisms and synthetic tapes. Each window shall have its own individual mini-blind. Mini-blinds shall be Hunter Douglas Riviera Commercial Aluminum Horizontal Blinds (cordless), Color: Brushed Aluminum # G8-034, with 1" wide aluminum horizontal slat with beveled steel profile or approved equal. Note: To prevent swaying, mini blinds that are installed on interior doors must be secured at the bottom of the door with metal clips.

Marines Recruiting Station located at 3701 Vestal Parkway, Vestal, NY

ITEM 0004B: SPOT REPLACE ACOUSTICAL CEILING TILES

1. Replace damaged and or stained acoustical ceiling tiles.

ITEM 0004C: REPAIR WATER FOUNTAIN IN SHARED HALLWAY

ITEM 0004D: INSTALL EXTERIOR JOINT PERFORATED WINDOW GRAPHICS (ONLY ON EXTERIOR STOREFRONT ENTRANCE

3. Exterior Signs Graphics General: Install Exterior Joint Perforated Window Wrap Graphics (Only on exterior main storefront entrance)

g. Perforated Window Wraps: The application of perforated window wraps is dependent upon the type of facility, along with other requirements. COE representative / Military Service(s) shall have control over what graphic is applied, what position the graphic will be placed and on which windows. Lessor / contractor will coordinate with the

COE representative. ALL perforated window wraps to incorporate into the overall graphic a "**Weapons Prohibited**" graphic (8.5" W x 11" H) centered vertically on the door directly next to the handle (see below example and Box.com for the graphic file).

h. **Collocated with a Shared Entrance Door (JRFC Graphic):** When multiple Military Services are present and they share the same entrance door, a "JRFC Graphic" will be installed. **Perforated window wrap installations shall have 100% coverage of all exterior glass**, including common area windows (if applicable). If Military Service "exclusive" windows on the sides or rear of the premises (not front windows) are present, individual Military Service graphics can be applied to those windows (coordinate with the COE Representative). The JRFC Graphic image shown below is provided for reference purposes **ONLY**. This image will be included in a PDF "Style Guide" that the contractor **MUST** download with detailed instructions. The image needs to be **put together with specified materials and look as close to the below image as possible**. In the Style Guide, the black lines represent window / door mullions. ALL perforated window wraps to incorporate into the overall graphic a "**Weapons Prohibited**" graphic (8.5" W x 11" H) centered vertically on the door directly next to the handle (see example and Box.com for the graphic file). The COE representative will provide a link and folder name for the contractor to download ALL appropriate files necessary (36 in total) to create / install the JRFC Graphic:

The Lessor will provide all graphics examples and mockup elevations for COE approval, and when chosen, provide final proofs and storefront elevation renderings of the approved graphics.

i. The approved graphic(s) shall meet the following standard(s) or equivalent on all storefront window wrap applications (including all manufacturer installation requirements MUST be followed, especially for temperatures, for the installation of all perforated exterior graphics):

a. 3M, 8170 – P40 (40% perforated), 4-mil, opaque, cast vinyl film with a high gloss finish.
b. Window graphic film will have a visual obscurity density of 60 / 40.
c. Apply 3M Scotchcal Optically Clear Gloss Overlaminate (8518) and shall be laminated prior to installation.
d. Apply 3M edge sealer tape 8914 at time of installation to all edges of the perforated film to prevent pealing.
e. The Lessor will coordinate with the Army Corps of Engineers (COE) representative regarding the correct graphic. The following are the types of graphics that might be installed at a location (as indicated in #1 and #2 above), and in rare cases both could be installed.
f. Military Service Individual Graphics (Stand-alone OR Collocated with separate entrance doors).
g. JRFC Graphic (Collocated with shared entrance door for all Military Services).

Note: Only the COE representative will make the final decision on the approved graphics.

-

Army Recruiting Station located at 3701 Vestal Parkway, Vestal, NY

ITEM 0004E REPLACE CARPET TILES IN ALL INTERIOR OFFICE AREA(S)

1. **Flooring:**

a. Army request to remove all old carpet tiles in office area(s) and install new carpet tiles in all office area(s). **Contractor will be responsible for removing and replacing all furniture as required.**

b. **Base Cove (for VCT & Carpet only):** Johnsonite/Tarkett (https://distributor.tarkett.com), Rubber; Color: #40, Black, 4" H.

c. **Carpet Schedule (office, test room and related areas):** Carpet tiles with base cove shall be installed throughout the entire space except storage rooms, restrooms, common area lobbies, corridors, and exit areas. All carpet must be installed smoothly and evenly in accordance with manufacturer's instructions and *with the approved low Volatile Organic Compounds (VOC's) release adhesive*. **One (1)extra box of carpet tiles (for the Army at this location) shall be left in the security closet for future use.**

ARMY CARPET SCHEDULE	
Manufacturer / Style:	U.S. Army Recruiting Standard: # 802E5
Color (Name, Number):	Duty, BB90D
Product:	Carpet Tile
Installation Method:	Quarter Turn
Installation Adhesive:	"LokDots" Adhesive System

-

Navy Recruiting Station located at 3701 Vestal Parkway, Vestal, NY

ITEM 0004B: SPOT REPLACE ACOUSTICAL CEILING TILES

1. Replace damaged and or stained acoustical ceiling tiles.

ITEM 0004C: INSTALL CARPET TILES

NAVY CARPET SCHEDULE	
Manufacturer / Style:	Shaw / U.S. Navy Recruiting Standard: # 800G3
Color (Name, Number):	Water Garden, 69400
Product:	Carpet Tile
Installation Method:	Monolithic (See Note #1)
Installation Adhesive:	"LokDots" Adhesive System
Note 1: Carpet tile installation to be installed monolithic with all arrows pointing in the left-direction upon walking into the entrance of the space.	
Note 2: If selected, for expedited delivery - government pricing contact: Shaw Contract for ALL inquiries go to website: **www.shawcontract.com/usrecruiting**. For pricing and order inquiries go to the pricing & ordering tab at the above website, or call: 1-800-356-7429 ext. 1 or email: **cs.gsa@shawinc.com**. For gener inquiries call Michele Leise, 402-968-6025, email: **michele.leise@shawcontract.com**	

Base Cove (for VCT & Carpet only): Johnsonite / Tarkett (**https://distributor.tarkett.com**), Rubber; Color: #40, Black, 4" H.

Flooring - General parameters: All floor areas will be of a common level, finished in a specified material and have a minimum live-load capacity of 50 pounds per square foot.

Navy Recruiting Station located at 1522-1524 Ridge Road West, Greece, NY

ITEM 0005A: REPAIR DOOR STATION FOR VIDEO INTERCOM ENTRY SYSTEM -SPECIAL APP#1

VIDEO INTERCOM ENTRY CONTROL (EC) SYSTEM COMPONENTS TABLE				
Application:	**Model / Skew #'s:**	**Description:**	**Qty:**	**Notes:**
Primary Entrance and/or Secondary Egress Doors	IXG-DM7-HIDA	Aiphone - IXG System Door-Entrance Station (with mounting bracket)	1 Ea	See Note 1, 2, 3, 4, 5.
Door-Entrance Station Mount	SBX-IXGDM7	Aiphone - Surface Mount Box, Includes Rain Hood	1 Ea	
Keypad	DK-26 SS	Securitron - Keypad with CPU Board/Controller	1 Ea	**Optional** Rear Egress Only See Note 4, 11
Each Military Service Space	IXG-2C7	Aiphone - Desk-Tenant Station	1 Ea	See Note 1, 6
Each Military Service Space	MCW-S/B	Aiphone - Desk-Tenant Station – Stand	1 Ea	Per Desk-Tenant Station
Security Board	IXG-MAA	Aiphone - Network Door Release Relay Adaptor	1	Selective door release (allows Military Services to release specific doors)
	IXG-MK	Aiphone - Guard Station (includes flush mount kit)	1	See Note 12
	FPO250-C8D8E2	LSP - Power Supply (hardwired on security board)	1	8 Door / 8 Lock, 20A, 12VDC
Primary Entrance Doors	DPS-M-GY	Securitron - Door Position Switch (Magnetic)	Ea	Use DPS-W-GY for Wood Doors. Only required for shared / common area egress doors.
Security Board (in Security Cabinet)	GS752TPP-300NAS	NETGEAR – 48 Port **Primary** PoE+ Switch	Ea	48 Port (expandable with another 24 or 48 port switch)
Security Board (in Security Cabinet)	GS524UP-100NAS	NETGEAR – 24 Port **Optional / Secondary** PoE++ Switch	Ea	24 Port PoE++ Switch (See Note 5)

VIDEO INTERCOM ENTRY CONTROL (EC) NOTES:

14) REQUIRED FOR CONTRACTORS:

a. Contractor MUST complete questionnaire form for Aiphone custom program configuration file, which will be provided to the contractor for each office via email.

b. Programming design questionnaire forms & information to be completed at: **https://www.aiphone.com/support/technical-support/aiphone-programming-questionnaire**

15) See **https://www.aiphone.com/products/ixg-series** for IXG specifics and **recruitingcenters@aiphone.com** for installation details / questions at recruiting centers.
16) **Certified Integrators / Installers (warranty):**
a. Aiphone - **https://www.aiphone.com/kbtopic/ix-series-integrations-hanwha**
b. Hanwha Vision STEP Partner - **https://hanwhavisionamerica.com/partner-portal/**
c. ASSA ABLOY (Rockwood, Securitron, Accentra, AdamsRite, and Pemko components) - **https://www.assaabloydss.com/en/support/installation-and-service-partners/certified-integrators**
17) Door release time range: Default of 5-10 seconds for all electrified doors / key pads (IXG, DK-26).
18) Door-entrance station cameras to be connected to the CCTV system **and shown on service specific open area television only.** These cameras and desk-tenant stations require a PoE+ Switch connection. **A license is needed to record door entrance station camera. Either recordability or viewability with be an option but not both.** If more than 48 ports (or PoE++ ports) are required, add on the optional / secondary PoE+ Switch.
19) **Door-entrance station mounting: If possible, mount door-entrance station on the side of the mullion flush to the exterior window. Purpose would be to try to limit the ability for the entrance station from being pulled off of the storefront**.
20) Desk-tenant stations to be installed in each Military Service facility (minimum of 2, maximum of 8) for each Military Service recruiter identified in paragraph A.4. **See Air Force Attachment "4a" for their desk-station requirements. Optional wall mounted desk-tenant s**tations should be placed free and clear of all Military Service accent walls (as identified on **approved floor plan / AE drawings**). Wall Outlet (yellow data port jack) to desk-tenant station shall include an eight (8) foot yellow straight-through CAT 6 patch wire. In rare cases (as directed by a COE representative or on the approved floor plan / AE drawings) a wall mount for desk-tenant stations may be necessary (wall mount model = IXG-FMK-2C7).
21) See paragraph G.7 for Door Hardware Schedule & release components.
22) All stranded low voltage wire (exit device, keypad, and door position switch) will be 18 AWG stranded wire with label / tag at each end for easy identification and troubleshooting. See ***ENCLOSURE #6a, 6b, 6c, and 6d*** for EC example components, wiring and layout diagrams.
23) See paragraph K. for PoE+ Switch & LSP Power supply requirements (hardwired on security board).
24) See communications paragraph E and ***ENCLOSURE #1a, 1b, 1c and 1d*** for locations and colors of data port jacks and CAT 6 wires.
25) No Public Access Secondary Doors: A secondary egress door that only Recruiting personnel use to enter the station. Typically, the public or potential recruits do not access thru this door. The "No public access doors" only requires the Securitron DK-26 Keypad with controller (vs the Aiphone door-entrance station). **If the secondary egress is just an emergency only egress where no parties typically than neither the DK-26 or Aiphone door-station will be needed.**
26) Door position switches to activate **shared egress door(s)** chime(s). Primary shared egress doors shall have a single-tone (e.g. - "ding"), and secondary shared egress door(s) shall have two-tones (e.g. - "ding-dong").

ENCLOSURE #6a, 6b, 6c and 6d

GENERAL STANDARD (GS)

Video Intercom Entry Control (EC) - IXG System Wiring Diagrams & Example Setup

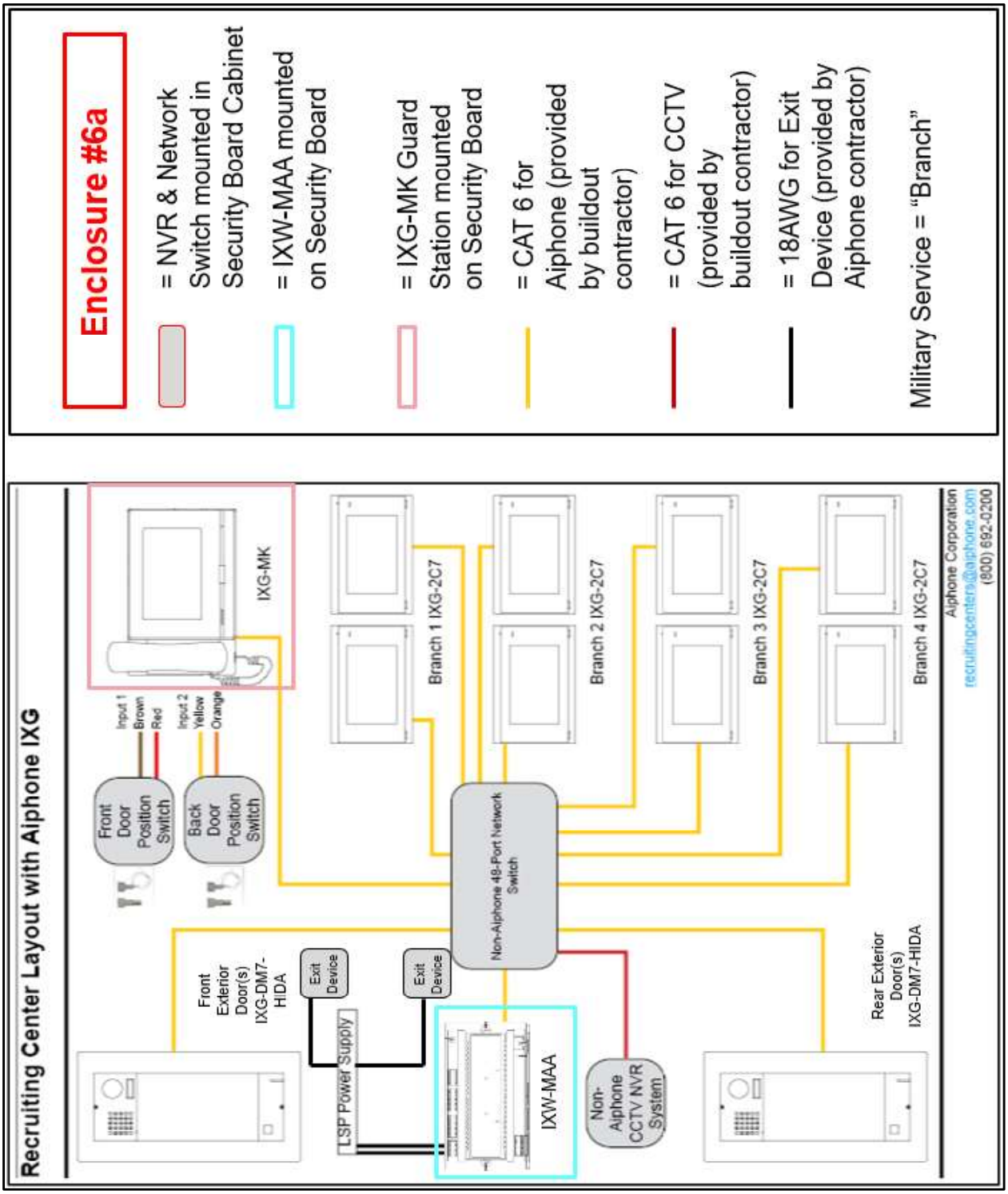

IXW-MAA

Multi-Purpose Adaptor for the IX Series

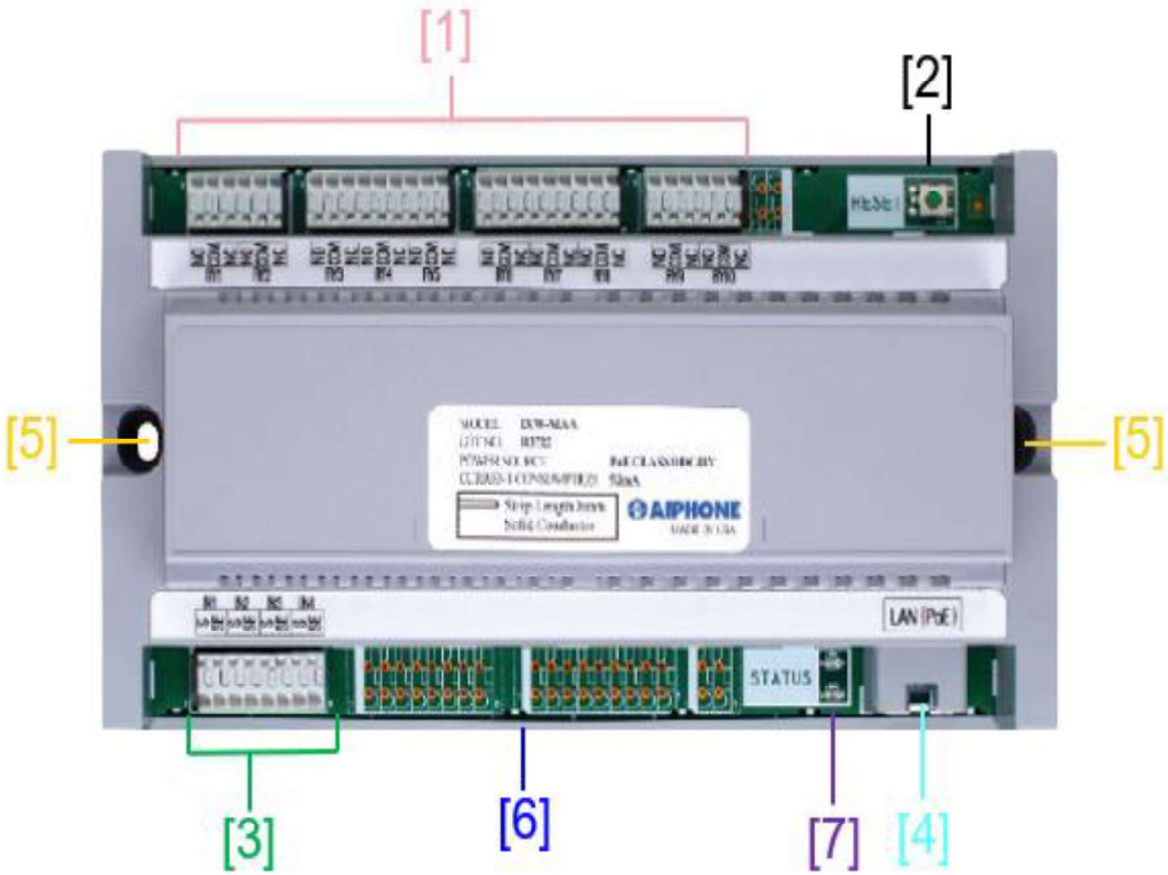

Feature Call-Out Definitions:

[1]: Contact Outputs 1 – 10

[2]: Reset Button

[3]: Contact Inputs 1 – 4

[4]: LAN Port

[5]: Mounting Point(s)

[6]: DIN Rail Mount (on back of adaptor)

[7]: Status Indicators

Enclosure #6b

Security Hardware / Application Requirements (EC & CCTV/NVR Systems): Contractor will advise the COE Representative on any unique site / office requirement(s) which will require any modifications to these specified security components.

u. **Off network / offline Hardware**.

v. **Certified Integrators / Installers (warranty):**

1. Aiphone - https://www.aiphone.com/kbtopic/ix-series-integrations-hanwha

2. Hanwha Vision STEP Partner - https://hanwhavisionamerica.com/partner-portal/

3. ASSA ABLOY (Rockwood, Securitron, Accentra, AdamsRite, and Pemko components) - https://www.assaabloydss.com/en/support/installation-and-service-partners/certified-integrators

w. EC and CCTV / NVR systems to be installed at the same time as they are integrated. Aiphone: IXG support tool file and IXG site specific configuration file to be loaded on the NVR (operating system drive).

x. **NVR Computer Bios / Auto Start**: Contractor to set / confirm NVR system BIOS settings are set to reboot automatically on power loss with MS Windows Auto Login (**NO** login password).

Bios instructions are as follows:

11. Power On the NVR and press "DEL" or "F1" or "F2" or "F10" to enter BIOS (CMOS) setup utility (the way to enter into BIOS Settings depends on the computer board manufacturer).

12. Inside BIOS menu, look under the following menus to find for a setting named "Restore on AC/Power Loss" or "AC Power Recovery" or "After Power Loss", "Advanced" or "ACPI" or "Power Management Setup".

13. Note: The "Restore on AC/Power Loss" setting can be found under different places inside BIOS setup according to computer manufacturer.

14. Set the "Restore on AC/Power Loss" setting to "Power On".

15. Save and exit from BIOS settings.

y. **Static IP Address Schedule:** Manually set / confirmed by contractor.

7. Network PoE+ Switch(s) = 192.168.1.1-25 range.

8. Aiphone = 192.168.1.100-199 range – pre-set by Aiphone programming file.

9. CCTV / NVR = 192.168.1.200-255 range.

z. **User IDs, Passwords and Door Access Codes:** **Contractor to coordinate with the COE Representative for setting / integrating user IDs, passwords, and temporary door access codes, including controlled distribution. Contractor to ONLY assist the Military Services facility managers / ATO's with programming the final door access codes**.

1. Both the Aiphone IXG and Hanwha CCTV/NVR systems each require two (2) user / login levels each:

i. Aiphone IXG Support Tool:

- Administrator for installer (Recruiters will not have access).
- Property Manager for facility managers / ATOs (Recruiters will not have access).

ii. Hanwha / Wisenet Device Manager (CCTV): With these predefined user roles.

- Owner for installer / facility managers / ATOs (Recruiters will not have access).
- Viewer for onsite Recruiters / personnel.

iii. **No MS Windows login passwords. Windows Auto Login only**.

2. **System User IDs & Passwords (EC, CCTV/NVR/Decoder, PoE+ Switch):** User IDs / passwords shall be reset from defaults and set / integrated to match / align with each other. Admin and Owner user login level(s) & passwords to be set / integrated to match / align with each login level for all systems. **Local Personnel / Recruiters will only have access to the Wisenet "Viewer" user.**

3. **Door Access Codes with Controlled Distribution:** Contractor to program **two (2) temporary and unique access codes for each Military Service present.** The EC door-entrance station(s) (e.g. – A4611), and optional Securitron DK-26 individual keypad(s) codes to match #'s (e.g. – 4611) if both units are present. Two (2) separate and unique access codes are necessary for each Military Service.

aa. **Camera & Door-Entrance Station Tools (Torx Tool):** To be stored in a clear sleeve inside the Security cabinet at the Security Board.

bb. **System Documentation for CCTV/NVR Setup & License Tracking by Contractor** (activated licenses for all cameras, EC door-entrance station cameras, etc.):

1. One copy of the system(s) hardware documentation / manuals / login details, and camera licenses are to be stored in a clear sleeve (along with the door-entrance station / camera tool (Torx tool) inside the Security cabinet at the Security Board.

2. **Save the following files on the NVR (operating system drive):**

i. Screen shots of all license keys and #'s **(email second copy to the COE representative)**.

ii. Create Wisenet project file with current date.

iii. Run Wisenet camera / encoder report "ALL" **(email second copy to the COE representative)**.

iv. Create camera config backup file.

cc. **Printed Exporting Video Instructions:** Provide "how to" instructions on exporting video footage from NVR, via USB extension wire located next to keyboard. Printed instructions to be placed in clear plastic sleeve and mounted above NVR monitor on Security Board.

dd. **System Training:**

1. A Training event will be scheduled and coordinated with the COE Representative for all Military Services / personnel (see paragraph A.4. for recruiter numbers). Installer(s) will submit to the COE a legible, dated roster with the trainer's contact information, each Trainee's name/rank, along with systems covered.

2. Minimum of a 1-hour training session MUST be provided as part of the installation by the contractor to ALL Military Services where the system(s) is installed.

3. **On-site training to use "temporary" door access codes with Military Service personnel. Temporary access codes to be deleted / reprogrammed by Service Facility Managers / ATO's after training is accomplished**.

4. The training will cover minimum items:

i. EC System:

- Individual Service access codes with controlled distribution to the Facility Manager / ATO.
- System Features and operation of door-entrance station(s), keypads, desk-tenant stations.
- RJ45 port and wire colors.
- How to disconnect and reconnect desk-tenant stations.
- Basic troubleshooting options / methods.
- Ensure door release time range is set to 5-10 seconds for electrified doors / keypads.

ii. CCTV/NVR/Decoder with monitor displays:

- Review camera placements and system features / settings.
- Adjust each camera and Military Branch display for optimal egress / camera views.
- What to do if the CCTV system shuts down, or display monitors stop displaying.
- Demonstrate automatic restart / reboot NVR and display monitors in each office.
- Discuss and provide location of printed "how to" instructions on exporting video footage from NVR.

iii. Facility Managers / ATO's: When present, detailed training for required (names / emails previously given by COE representative):

- Individual system software (Aiphone, Wisenet) instructional demo for logging in.
- Demonstrate features and operation on each system present.
- How to add/remove recruiter(s) door access code(s) on Aiphone IXG Support Tool and DK-26 control board.
- How to retrieve door entrance history / access control data from Aiphone IXG Support Tool.
- How to disconnect/reconnect desk-tenant stations.
- Demonstrate automatic reboot / restart on EACH System, basic trouble shooting options.
- How to search / retrieve / export data video from NVR.
- What to do if the CCTV system shuts down, or display monitors stop displaying.

ITEM 0005B: INSTALL ADAMSRITE 8000 SERIES - ELECTRIFIED PUSHBAR, NEW LOCKSET WITH MOST UP-TO-DATE HARDWARE ON EXTERIOR SECONDARY EGRESS DOOR

1. **Install a brand-new Adamsrite 8000 series – electrified push-bar and new lockset with the most up to date hardware as listed below:**

Application:	Model / Skew #'s:	Description:	Size:	Finish:	Qty:	Set Codes:	Notes:
Exterior Secondary Egress Door	8701EL36-24	Adams Rite - Rim Exit Device	2-5/8" x 36"	Satin Aluminum	1	E3	Electrified - 3701-36 for fire rated doors
	A620-626	Yale – Cylinder Housing & Interchangeable Core	N/A	Satin Chrome	1		
	MS4043-00-130	Adams Rite - Guard Ring	N/A	Clear Anodized	1		
	4612-1	Adams Rite - Power Transfer	N/A	Chrome	1		Electrified
	BF158-630	Rockwood - Door Pull	1" x 12"	Satin SS	1		Match Existing building color
	3531-689	Yale - Automatic Door Closer	2-1/8" x 12"	Aluminum	1		
	BLP-210 (outswing)	DON-JO - Security Latch Guard (Anti-Pry Plate)	10" x 3.25" (outswing)	Match Existing	1		Conform to existing door configuration (e.g., offset, door handle, etc.)

Date: _____ Josh Coburn COBURN.JOSHUA.KYLE.1362217020 Digitally signed by COBURN.JOSHUA.KYLE.1362217020 Date: 2026.04.06 13:55:56 -04'00' _____
Realty Specialist, Upstate Acquisition Branch

Date: _____ APPROVED BY: Tanesha Smith _____
Supervisory Realty Specialist, Metro NY/NJ Acquisition Branch

Date: _____ APPROVED BY: _____

Contracting Officer