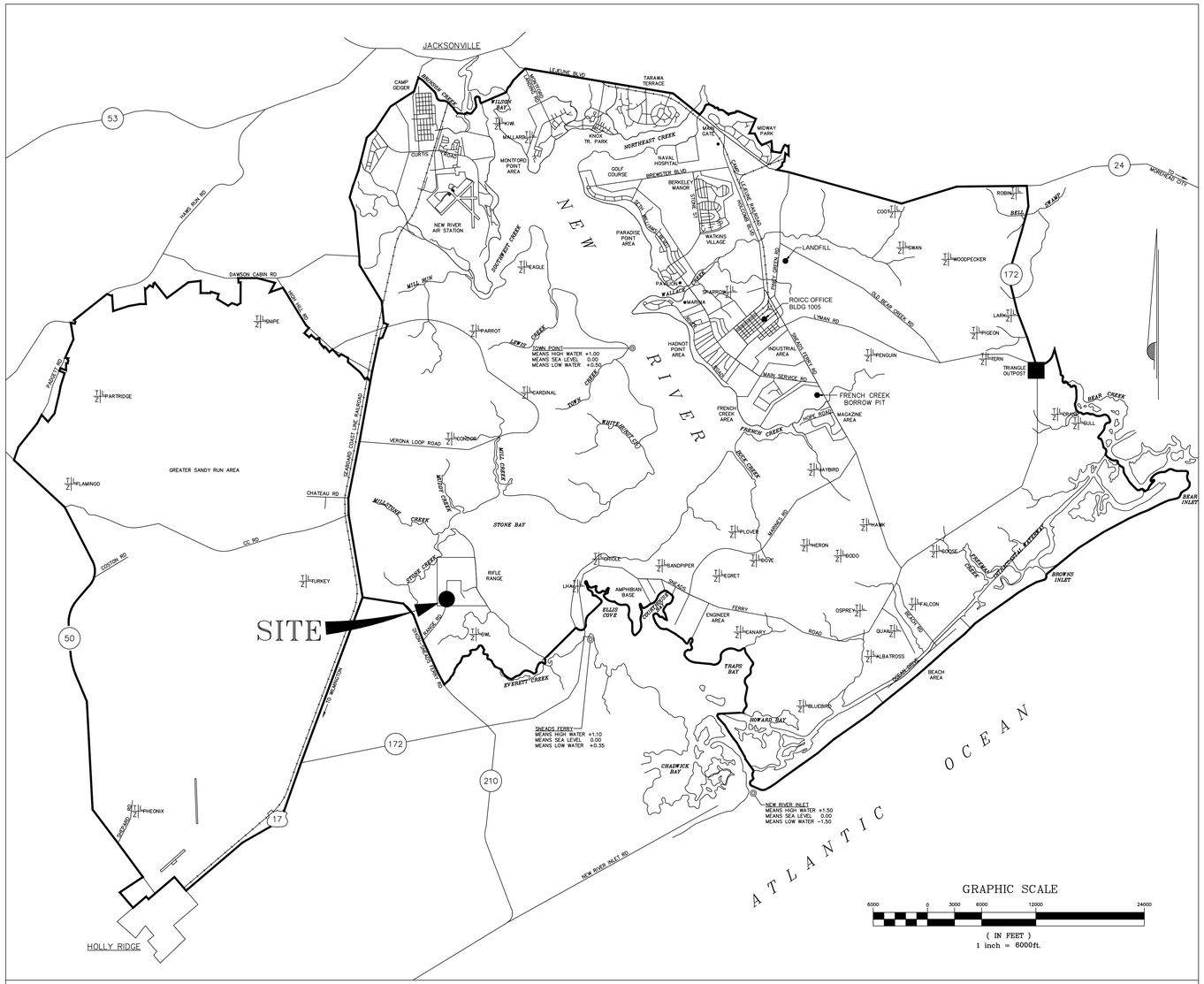


LOCATION MAP – U.S. MARINE CORPS BASE, CAMP LEJEUNE, N.C.

SCALE: 1" = 6000'

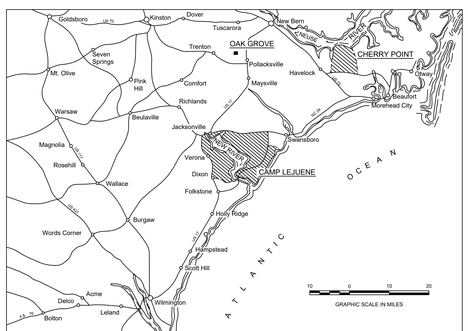


VICINITY MAP – CAMP LEJEUNE, N.C.

## DRAWING INDEX

| NAVFAC DWG NO. | SHEET NO. | TITLE |
|---|---|---|
| 60044643 | G001 | VICINITY AND LOCATION PLAN |
| 60044644 | C100 | EXISTING CONDITIONS |
| 60044645 | C101 | DEMO PLAN |
| 60044646 | C102 | SITE PLAN – PIPE CROSSING |
| 60044647 | C103 | SITE PLAN – INTERSECTION |
| 60044648 | C501 | GUARDRAIL & CURBING DETAILS |
| 60044649 | C502 | GUARDRAIL & ASPHALT DETAILS |
| 60044650 | C503 | GATE DETAILS |

# 20-0061
# REPAIR WASHOUT ON RIFLE RANGE ROAD

DISCLOSURE OF INFORMATION

CONTRACTOR SHALL COMPLY AS FOLLOWS:

(A) THE CONTRACTOR SHALL NOT RELEASE TO ANYONE OUTSIDE THE CONTRACTOR'S ORGANIZATION ANY UNCLASSIFIED INFORMATION, REGARDLESS OF MEDIUM (E.G., FILM, TAPE, DOCUMENT), PERTAINING TO ANY PART OF THIS CONTRACT OR ANY PROGRAM RELATED TO THIS CONTRACT, UNLESS:
(1) THE CONTRACTING OFFICER HAS GIVEN PRIOR WRITTEN APPROVAL; OR
(2) THE INFORMATION IS OTHERWISE IN THE PUBLIC DOMAIN BEFORE THE DATE OF RELEASE.

(B) REQUESTS FOR APPROVAL SHALL IDENTIFY THE SPECIFIC INFORMATION TO BE RELEASED, THE MEDIUM TO BE USED, AND THE PURPOSE FOR THE RELEASE. THE CONTRACTOR SHALL SUBMIT ITS REQUEST TO THE CONTRACTING OFFICER AT LEAST 45 DAYS BEFORE THE PROPOSED DATE FOR RELEASE.

(C) THE CONTRACTOR AGREES TO INCLUDE A SIMILAR REQUIREMENT IN EACH SUBCONTRACT UNDER THIS CONTRACT. SUBCONTRACTORS SHALL SUBMIT REQUESTS FOR AUTHORIZATION TO RELEASE THROUGH THE PRIME CONTRACTOR TO THE CONTRACTING OFFICER.

**REVISED FINAL**

**G001**

DEPARTMENT OF THE NAVY NAVAL FACILITIES ENGINEERING COMMAND
MARINE CORPS BASE
CAMP LEJEUNE, NORTH CAROLINA

DES. M. HORNE
DR. M. HORNE
CHK. C. MAAS, PE
SUBMITTED BY: M. HORNE
DESIGN DIR. C. MAAS, PE
DATE: 7/30/2026

20-0061
REPAIR WASHOUT ON
RIFLE RANGE ROAD
VICINITY AND LOCATION PLAN

| SIZE | CODE IDENT NO. | PWO DRAWING NO. |
|---|---|---|
| E1 | 80091 | 60044643 |

CONST. CONTR. NO. N40085-20-B-0061

SCALE: AS SHOWN | SPEC. 05-20-0061 | SHEET 1 OF 8

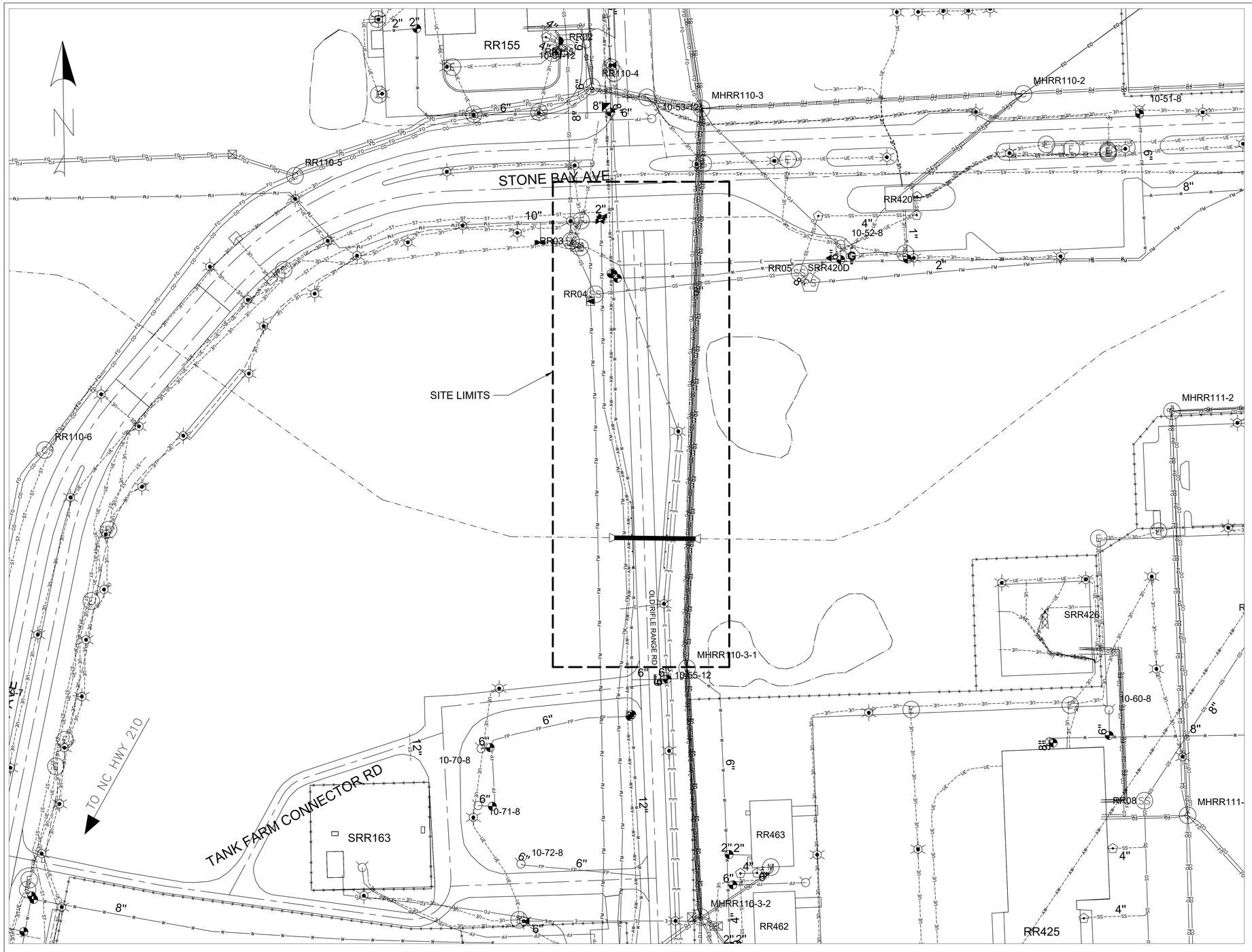


GENERAL NOTES:

1. CONTRACTOR MUST LOCATE ALL UNDERGROUND UTILITIES, INCLUDING TELECOMMUNICATIONS AND COMMERCIAL CABLING, PRIOR TO GROUND DISTURBING ACTIVITIES. NOTIFY BASE TELEPHONE OF ANY CONFLICTS WITH ANY DIRECT BURY OR CONDUIT COMMUNICATION UTILITIES 30 DAYS PRIOR TO DIGGING.
2. CONTRACTOR MUST FIELD VERIFY ALL MEASUREMENTS.
3. PRESERVE AND PROTECT ALL EXISTING UTILITIES, INCLUDING TELECOMMUNICATIONS AND COMMERCIAL CABLING.
4. CONTRACTOR IS RESPONSIBLE FOR ANY DAMAGE TO UTILITIES, INCLUDING TELECOMMUNICATIONS AND COMMERCIAL CABLING.
5. CONTRACTOR IS RESPONSIBLE TO COORDINATE COMMERCIAL CABLING WITH COMMERCIAL CABLING PROVIDERS
6. ALL UTILITY WORK MUST BE IN ACCORDANCE WITH APPLICABLE STATE AND BASE CODES.
7. CONTRACTOR MUST COORDINATE ALL CONSTRUCTION ACTIVITIES WITH THE CONTRACTING OFFICER.
8. SOD ANY DISTURBED AREAS UPON COMPLETION OF CONSTRUCTION.
9. JOBSITE MUST BE KEPT CLEAR OF ALL DEBRIS AND TRASH.
10. CONTRACTOR MUST BE RESPONSIBLE FOR ALL ASPECTS OF ENVIRONMENTAL, HEALTH AND SAFETY (EHS). CONTRACTOR SHALL BE RESPONSIBLE FOR COMPLYING WITH ITS POLICIES AND PROCEDURES RELATED TO EHS MATTERS..

LEGEND

- WALL
- FENCE
- WATER MAIN LINE
- WATER SERVICE LINE
- WATER FIRE PROTECTION LINE
- GLOBE VALVE
- GATE VALVE
- FIRE HYDRANT
- TELECOMMUNICATIONS
- FIBER OPTIC
- COMMUNICATIONS SPLICE
- RISER
- COMMUNICATION MANHOLE
- WASTEWATER GRAVITY MAIN
- WASTEWATER FORCE MAIN
- SANITARY SEWER MANHOLE
- STORMWATER PIPE
- STORMWATER DITCH/SWALE
- STORMWATER MANHOLE
- STORMWATER INLET
- STORMWATER HEADWALL
- OVERHEAD ELECTRIC
- UNDERGROUND ELECTRIC
- ELECTRICAL MANHOLE
- CIRCUIT BREAKER
- ELECTRICAL DISCONNECT
- SINGLE PHASE TRANSFORMER
- FUSE CUTOUT
- ELECTRIC METER
- TRANSFORMER PAD
- GENERATOR
- SWITCH
- ROADS/DRIVEWAY/PARKING
- ROADWAY CENTERLINE
- AIRFIELD SURFACE
- BUILDING
- STEAM PIT
- CONDENSATION LINE
- STEAM LINE
- MONITORING WELL

GRAPHIC SCALE

50 0 25 50 100 200

( IN FEET )
1 inch = 50 ft.

DISCLOSURE OF INFORMATION

CONTRACTOR SHALL COMPLY AS FOLLOWS:

(A) THE CONTRACTOR SHALL NOT RELEASE TO ANYONE OUTSIDE THE CONTRACTOR'S ORGANIZATION ANY UNCLASSIFIED INFORMATION, REGARDLESS OF MEDIUM (E.G., FILM, TAPE, DOCUMENT), PERTAINING TO ANY PART OF THIS CONTRACT OR ANY PROGRAM RELATED TO THIS CONTRACT, UNLESS:
(1) THE CONTRACTING OFFICER HAS GIVEN PRIOR WRITTEN APPROVAL; OR
(2) THE INFORMATION IS OTHERWISE IN THE PUBLIC DOMAIN BEFORE THE DATE OF RELEASE.

(B) REQUESTS FOR APPROVAL SHALL IDENTIFY THE SPECIFIC INFORMATION TO BE RELEASED, THE MEDIUM TO BE USED, AND THE PURPOSE FOR THE RELEASE. THE CONTRACTOR SHALL SUBMIT ITS REQUEST TO THE CONTRACTING OFFICER AT LEAST 45 DAYS BEFORE THE PROPOSED DATE FOR RELEASE.

(C) THE CONTRACTOR AGREES TO INCLUDE A SIMILAR REQUIREMENT IN EACH SUBCONTRACT UNDER THIS CONTRACT. SUBCONTRACTORS SHALL SUBMIT REQUESTS FOR AUTHORIZATION TO RELEASE THROUGH THE PRIME CONTRACTOR TO THE CONTRACTING OFFICER.

**REVISED FINAL**

**C100**

DEPARTMENT OF THE NAVY NAVAL FACILITIES ENGINEERING COMMAND
MARINE CORPS BASE
CAMP LEJEUNE, NORTH CAROLINA

DES. M. HORNE
DR. M. HORNE
CHK. C. MAAS, PE
SUBMITTED BY: M. HORNE
DESIGN DIR. C. MAAS, PE
DATE: 7/30/2026

20-0061
REPAIR WASHOUT ON
RIFLE RANGE ROAD
EXISTING CONDITIONS

| SIZE | CODE IDENT NO. | PWO DRAWING NO. |
|---|---|---|
| E1 | 80091 | 60044644 |

CONST. CONTR. NO. N40085-20-B-0061

SCALE: AS SHOWN SPEC. 05-20-0061 SHEET 2 OF 8

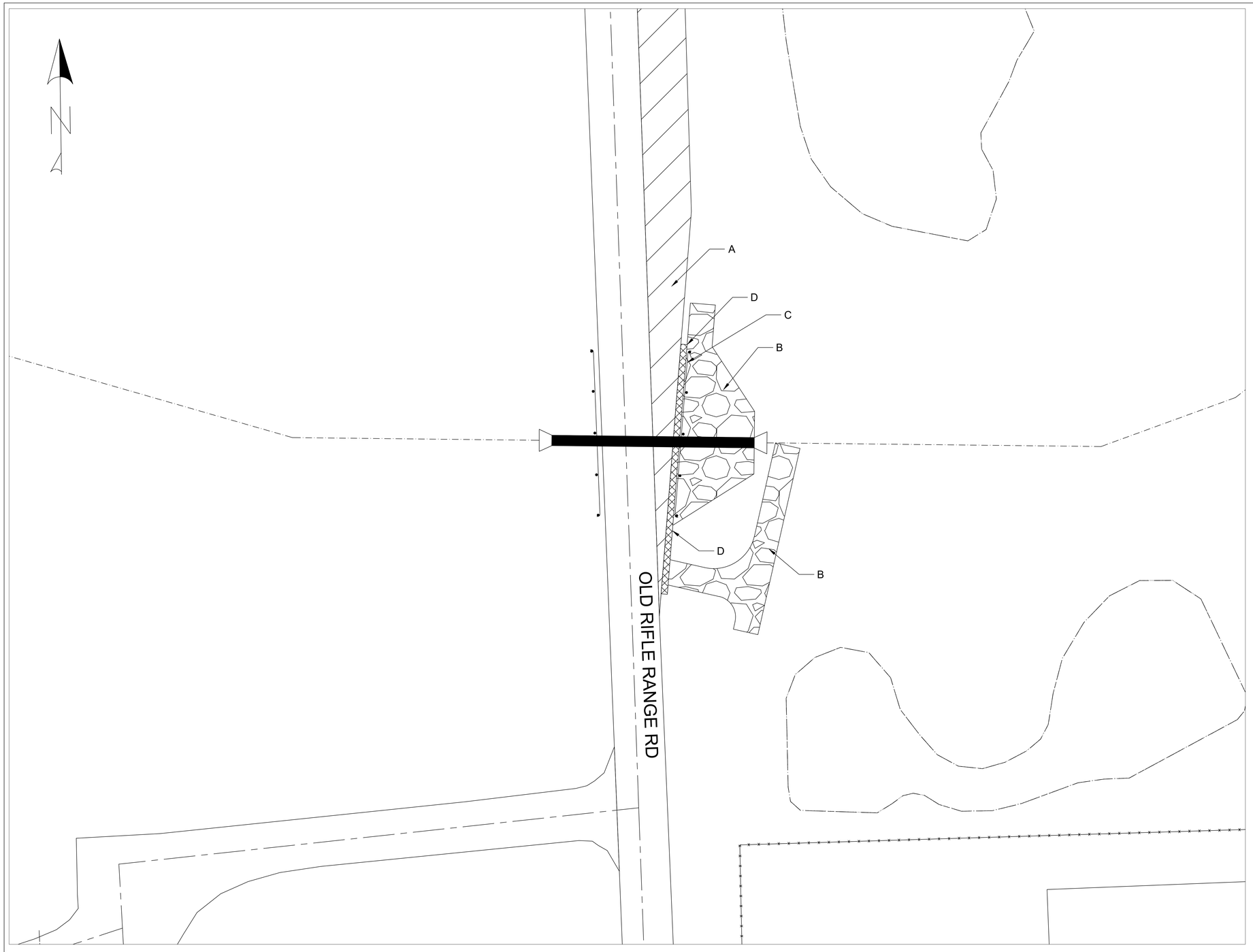


GENERAL NOTES:

1. CONTRACTOR MUST LOCATE ALL UNDERGROUND UTILITIES, INCLUDING TELECOMMUNICATIONS AND COMMERCIAL CABLING, PRIOR TO GROUND DISTURBING ACTIVITIES. NOTIFY BASE TELEPHONE OF ANY CONFLICTS WITH ANY DIRECT BURY OR CONDUIT COMMUNICATION UTILITIES 30 DAYS PRIOR TO DIGGING.
2. CONTRACTOR MUST FIELD VERIFY ALL MEASUREMENTS.
3. PRESERVE AND PROTECT ALL EXISTING UTILITIES, INCLUDING TELECOMMUNICATIONS AND COMMERCIAL CABLING.
4. CONTRACTOR IS RESPONSIBLE FOR ANY DAMAGE TO UTILITIES, INCLUDING TELECOMMUNICATIONS AND COMMERCIAL CABLING.
5. CONTRACTOR IS RESPONSIBLE TO COORDINATE COMMERCIAL CABLING WITH COMMERCIAL CABLING PROVIDERS
6. ALL UTILITY WORK MUST BE IN ACCORDANCE WITH APPLICABLE STATE AND BASE CODES.
7. CONTRACTOR MUST COORDINATE ALL CONSTRUCTION ACTIVITIES WITH THE CONTRACTING OFFICER.
8. SOD ANY DISTURBED AREAS UPON COMPLETION OF CONSTRUCTION.
9. JOBSITE MUST BE KEPT CLEAR OF ALL DEBRIS AND TRASH.
10. CONTRACTOR MUST BE RESPONSIBLE FOR ALL ASPECTS OF ENVIRONMENTAL, HEALTH AND SAFETY (EHS). CONTRACTOR SHALL BE RESPONSIBLE FOR COMPLYING WITH ITS POLICIES AND PROCEDURES RELATED TO EHS MATTERS..

DEMO KEYNOTES:

A — DEMOLISH AND REMOVE EXISTING TURN LANES ALL THE WAY TO THE INTERSECTION. REMOVE ALL ASPHALT AND STONE BASE. BACKFILL WITH SELECT FILL IN 6" LIFTS UP TO 4" BELOW FINISH GRADE. REMAINING BACKFILL WILL BE 4" OF TOPSOIL TO FINISH GRADE. SOD ALL DISTURBED AREAS WITH CENTIPEDE SOD.

B — REMOVE EXISTING RIP RAP AND FABRIC. THE EXISTING RIP RAP MAY BE REUSED FOR STABILIZATION LATER WHERE REQUIRED.

C — DEMOLISH AND REMOVE EXISTING GUARD RAIL AND POSTS.

D — DEMOLISH AND REMOVE EXISTING CONCRETE CURB AND GUTTER

ADDITIONAL DEMO NOTES:

1. REMOVE ALL TREES, BUSHES, AND OTHER UNWANTED VEGETATION THAT HAS GROWN ON THE SIDE SLOPES AND RIP RAP AREAS.
2. ALL DEBRIS MUST BE REMOVED AND DISPOSED OF OFF BASE.
3. ENSURE NOT TO CAUSE ANY DAMAGE TO THE REMAINING TRAVEL LANES, REMAINING GUARD RAIL, OR REMAINING SIDE SLOPES
4. CONTRACTOR MUST PROVIDE ADEQUATE SEDIMENT AND EROSION CONTROL MEASURES FOR ALL DISTURBED AREAS TO PREVENT SEDIMENT DISCHARGE TO THE DRAINAGE SWALE. TEMPORARY FEATURES MAY BE CONSTRUCTED TO SLOW RUNOFF ON THE SITE.
5. CONTRACTOR MUST PROVIDE ALL ROAD CLOSURE SIGNS IN ACCORDANCE WITH THE MANUAL ON UNIFORM TRAFFIC CONTROL DEVICES (MUTCD) AND NCDOT STANDARDS.

ENVIRONMENTAL NOTES:

1. CONTRACTOR MUST ENSURE THAT NO SEDIMENT ENTERS THE STREAM OR ADJACENT WETLANDS.
2. AVOID GROUND DISTURBANCE WITHIN THE STREAM & WETLANDS TO MAXIMUM EXTENT POSSIBLE.
3. ALL SOILS ARE ASSUMED TO CONTAIN PFAS. ALL SOIL MUST REMAIN ON SITE.

LEGEND

| | |
|---|---|
| —ST——ST— STORMWATER PIPE | ROADS/DRIVEWAY/PARKING |
| STORMWATER DITCH/SWALE | ROADWAY CENTERLINE |
| | AIRFIELD SURFACE |
| (D) STORMWATER MANHOLE | BUILDING |
| | WALL |
| STORMWATER INLET | FENCE |
| STORMWATER HEADWALL | |

GRAPHIC SCALE

20 0 10 20 40 80

( IN FEET )
1 inch = 20 ft.

DISCLOSURE OF INFORMATION

CONTRACTOR SHALL COMPLY AS FOLLOWS:

(A) THE CONTRACTOR SHALL NOT RELEASE TO ANYONE OUTSIDE THE CONTRACTOR'S ORGANIZATION ANY UNCLASSIFIED INFORMATION, REGARDLESS OF MEDIUM (E.G., FILM, TAPE, DOCUMENT), PERTAINING TO ANY PART OF THIS CONTRACT OR ANY PROGRAM RELATED TO THIS CONTRACT, UNLESS:
(1) THE CONTRACTING OFFICER HAS GIVEN PRIOR WRITTEN APPROVAL; OR
(2) THE INFORMATION IS OTHERWISE IN THE PUBLIC DOMAIN BEFORE THE DATE OF RELEASE.

(B) REQUESTS FOR APPROVAL SHALL IDENTIFY THE SPECIFIC INFORMATION TO BE RELEASED, THE MEDIUM TO BE USED, AND THE PURPOSE FOR THE RELEASE. THE CONTRACTOR SHALL SUBMIT ITS REQUEST TO THE CONTRACTING OFFICER AT LEAST 45 DAYS BEFORE THE PROPOSED DATE FOR RELEASE.

(C) THE CONTRACTOR AGREES TO INCLUDE A SIMILAR REQUIREMENT IN EACH SUBCONTRACT UNDER THIS CONTRACT. SUBCONTRACTORS SHALL SUBMIT REQUESTS FOR AUTHORIZATION TO RELEASE THROUGH THE PRIME CONTRACTOR TO THE CONTRACTING OFFICER.

**REVISED FINAL**

**C101**

DEPARTMENT OF THE NAVY NAVAL FACILITIES ENGINEERING COMMAND
MARINE CORPS BASE
CAMP LEJEUNE, NORTH CAROLINA

DES. M. HORNE
DR. M. HORNE
CHK. C. MAAS, PE
SUBMITTED BY: M. HORNE
DESIGN DIR. C. MAAS, PE
DATE: 7/30/2026

20-0061
REPAIR WASHOUT ON
RIFLE RANGE ROAD
DEMO PLAN

SIZE E1 | CODE IDENT NO. 80091 | PWO DRAWING NO. 60044645
CONST. CONTR. NO. N40085-20-B-0061
SCALE: AS SHOWN | SPEC. 05-20-0061 | SHEET 3 OF 8

GENERAL NOTES:

1. CONTRACTOR MUST LOCATE ALL UNDERGROUND UTILITIES, INCLUDING TELECOMMUNICATIONS AND COMMERCIAL CABLING, PRIOR TO GROUND DISTURBING ACTIVITIES. NOTIFY BASE TELEPHONE OF ANY CONFLICTS WITH ANY DIRECT BURY OR CONDUIT COMMUNICATION UTILITIES 30 DAYS PRIOR TO DIGGING.
2. CONTRACTOR MUST FIELD VERIFY ALL MEASUREMENTS.
3. PRESERVE AND PROTECT ALL EXISTING UTILITIES, INCLUDING TELECOMMUNICATIONS AND COMMERCIAL CABLING.
4. CONTRACTOR IS RESPONSIBLE FOR ANY DAMAGE TO UTILITIES, INCLUDING TELECOMMUNICATIONS AND COMMERCIAL CABLING.
5. CONTRACTOR IS RESPONSIBLE TO COORDINATE COMMERCIAL CABLING WITH COMMERCIAL CABLING PROVIDERS
6. ALL UTILITY WORK MUST BE IN ACCORDANCE WITH APPLICABLE STATE AND BASE CODES.
7. CONTRACTOR MUST COORDINATE ALL CONSTRUCTION ACTIVITIES WITH THE CONTRACTING OFFICER.
8. SOD ANY DISTURBED AREAS UPON COMPLETION OF CONSTRUCTION.
9. JOBSITE MUST BE KEPT CLEAR OF ALL DEBRIS AND TRASH.
10. CONTRACTOR MUST BE RESPONSIBLE FOR ALL ASPECTS OF ENVIRONMENTAL, HEALTH AND SAFETY (EHS). CONTRACTOR SHALL BE RESPONSIBLE FOR COMPLYING WITH ITS POLICIES AND PROCEDURES RELATED TO EHS MATTERS.
11. CONTRACTOR MUST PROVIDE ALL ROAD CLOSURE SIGNS IN ACCORDANCE WITH THE MANUAL ON UNIFORM TRAFFIC CONTROL DEVICES (MUTCD) AND NCDOT STANDARDS.

NEW WORK KEYNOTES:

| | |
|---|---|
| A | NEW CURB AND GUTTER. SEE DETAIL SHEET C501. |
| B | CLASS B RIP RAP OVER NONWOVEN GEOTEXTILE FABRIC. DO NOT EXCEED 2:1 SLOPE. |
| C | NEW GUARDRAIL, SEE DETAIL SHEET C501 & C502. |
| D | CENTERLINE OF EXISTING SWALE TO BE REGRADED AND REFRESHED WITH CLASS B RIP RAP. |
| E | REMARK EXISTING PAVEMENT WITH PROPER PAVEMENT MARKINGS. |

LEGEND

| | |
|---|---|
| STORMWATER PIPE | ROADS/DRIVEWAY/PARKING |
| STORMWATER DITCH/SWALE | ROADWAY CENTERLINE |
| | AIRFIELD SURFACE |
| STORMWATER MANHOLE | BUILDING |
| | WALL |
| STORMWATER INLET | FENCE |
| STORMWATER HEADWALL | |

PAVEMENT MARKING NOTES:

1. PAVEMENT MARKINGS MUST BE HOT-APPLIED THERMOPLASTIC PAVEMENT MARKING MATERIAL MEETING NCDOT SPECIFICATIONS AND CONFORMING TO THE MANUAL ON UNIFORM TRAFFIC CONTROL DEVICES (MUTCD).
2. MATERIAL SHALL BE PRE-MIXED REFLECTORIZED THERMOPLASTIC WITH EMBEDDED GLASS BEADS AND ADDITIONAL SURFACE-APPLIED BEADS.
3. THERMOPLASTIC SHALL BE APPLIED AT THE FOLLOWING RATES:
   3.1. 90 MILS: CROSSWALK LINES, CENTER LINES, AND LANE LINES
   3.2. 120 MILS: STOP BARS, TRANSVERSE BANDS, EDGE LINES, GORE LINES, AND DIAGONALS
4. SURFACE AND AMBIENT TEMPERATURES MUST BE AT LEAST 50 DEGREES FAHRENHEIT AND RISING FOR APPLICATION.

ENVIRONMENTAL NOTES:

1. CONTRACTOR MUST ENSURE THAT NO SEDIMENT ENTERS THE STREAM OR ADJACENT WETLANDS.
2. AVOID GROUND DISTURBANCE WITHIN THE STREAM & WETLANDS TO MAXIMUM EXTENT POSSIBLE.
3. ALL SOILS ARE ASSUMED TO CONTAIN PFAS. ALL SOIL MUST REMAIN ON SITE.

GRAPHIC SCALE

20 0 10 20 40 80

( IN FEET )
1 inch = 20 ft.


DISCLOSURE OF INFORMATION

CONTRACTOR SHALL COMPLY AS FOLLOWS:

(A) THE CONTRACTOR SHALL NOT RELEASE TO ANYONE OUTSIDE THE CONTRACTOR'S ORGANIZATION ANY UNCLASSIFIED INFORMATION, REGARDLESS OF MEDIUM (E.G., FILM, TAPE, DOCUMENT), PERTAINING TO ANY PART OF THIS CONTRACT OR ANY PROGRAM RELATED TO THIS CONTRACT, UNLESS:
(1) THE CONTRACTING OFFICER HAS GIVEN PRIOR WRITTEN APPROVAL; OR
(2) THE INFORMATION IS OTHERWISE IN THE PUBLIC DOMAIN BEFORE THE DATE OF RELEASE.

(B) REQUESTS FOR APPROVAL SHALL IDENTIFY THE SPECIFIC INFORMATION TO BE RELEASED, THE MEDIUM TO BE USED, AND THE PURPOSE FOR THE RELEASE. THE CONTRACTOR SHALL SUBMIT ITS REQUEST TO THE CONTRACTING OFFICER AT LEAST 45 DAYS BEFORE THE PROPOSED DATE FOR RELEASE.

(C) THE CONTRACTOR AGREES TO INCLUDE A SIMILAR REQUIREMENT IN EACH SUBCONTRACT UNDER THIS CONTRACT. SUBCONTRACTORS SHALL SUBMIT REQUESTS FOR AUTHORIZATION TO RELEASE THROUGH THE PRIME CONTRACTOR TO THE CONTRACTING OFFICER.


**REVISED FINAL**

**C102**

DEPARTMENT OF THE NAVY NAVAL FACILITIES ENGINEERING COMMAND
MARINE CORPS BASE
CAMP LEJEUNE, NORTH CAROLINA

DES. M. HORNE
DR. M. HORNE
CHK. C. MAAS, PE
SUBMITTED BY: M. HORNE
DESIGN DIR. C. MAAS, PE
DATE: 7/30/2026

20-0061
REPAIR WASHOUT ON
RIFLE RANGE ROAD
SITE PLAN – PIPE CROSSING

| SIZE | CODE IDENT NO. | PWO DRAWING NO. |
|---|---|---|
| E1 | 80091 | 60044646 |

CONST. CONTR. NO. N40085-20-B-0061

SCALE: AS SHOWN | SPEC. 05-20-0061 | SHEET 4 OF 8

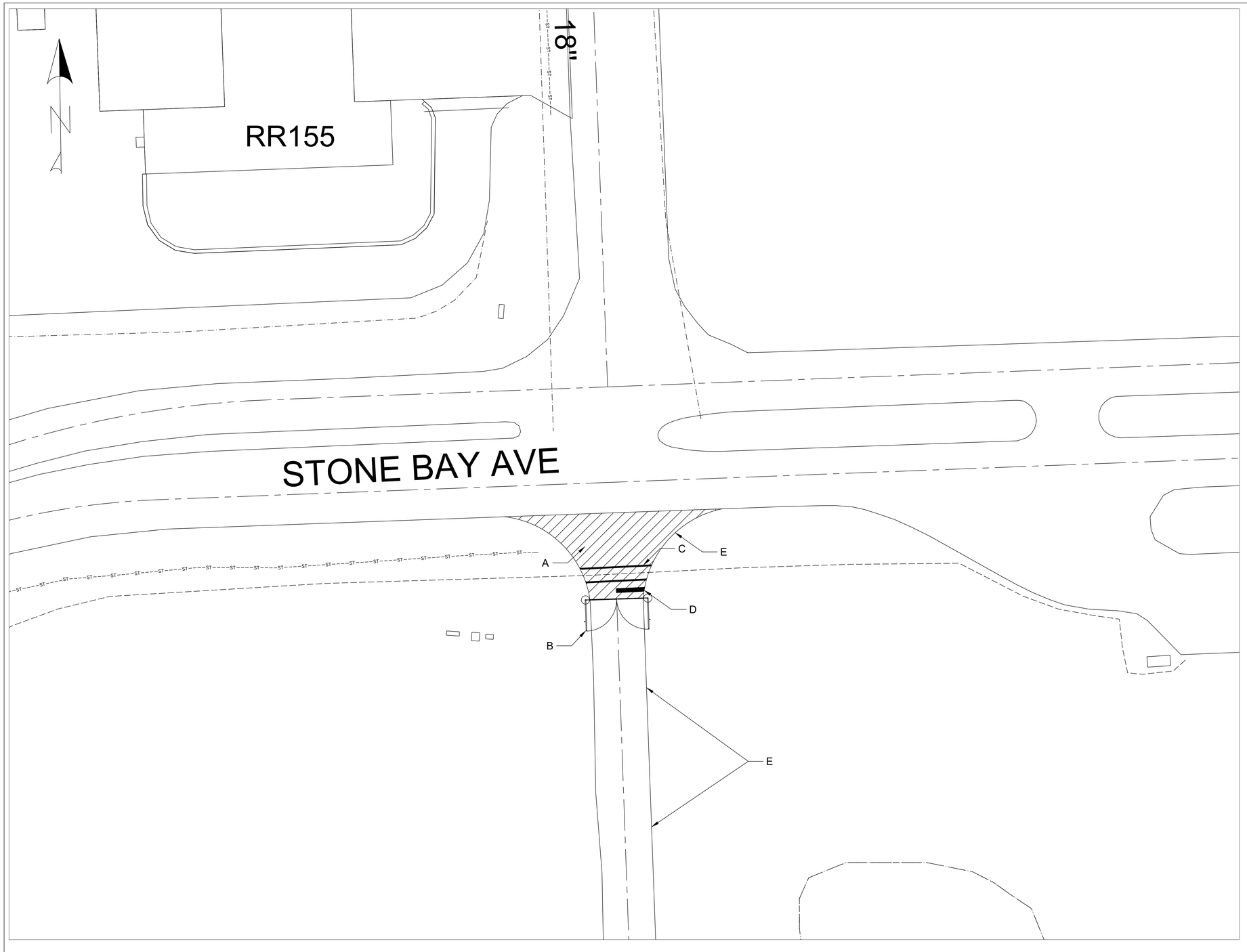


GENERAL NOTES:

1. CONTRACTOR MUST LOCATE ALL UNDERGROUND UTILITIES, INCLUDING TELECOMMUNICATIONS AND COMMERCIAL CABLING, PRIOR TO GROUND DISTURBING ACTIVITIES. NOTIFY BASE TELEPHONE OF ANY CONFLICTS WITH ANY DIRECT BURY OR CONDUIT COMMUNICATION UTILITIES 30 DAYS PRIOR TO DIGGING.
2. CONTRACTOR MUST FIELD VERIFY ALL MEASUREMENTS.
3. PRESERVE AND PROTECT ALL EXISTING UTILITIES, INCLUDING TELECOMMUNICATIONS AND COMMERCIAL CABLING.
4. CONTRACTOR IS RESPONSIBLE FOR ANY DAMAGE TO UTILITIES, INCLUDING TELECOMMUNICATIONS AND COMMERCIAL CABLING.
5. CONTRACTOR IS RESPONSIBLE TO COORDINATE COMMERCIAL CABLING WITH COMMERCIAL CABLING PROVIDERS
6. ALL UTILITY WORK MUST BE IN ACCORDANCE WITH APPLICABLE STATE AND BASE CODES.
7. CONTRACTOR MUST COORDINATE ALL CONSTRUCTION ACTIVITIES WITH THE CONTRACTING OFFICER.
8. SOD ANY DISTURBED AREAS UPON COMPLETION OF CONSTRUCTION.
9. JOBSITE MUST BE KEPT CLEAR OF ALL DEBRIS AND TRASH.
10. CONTRACTOR MUST BE RESPONSIBLE FOR ALL ASPECTS OF ENVIRONMENTAL, HEALTH AND SAFETY (EHS). CONTRACTOR SHALL BE RESPONSIBLE FOR COMPLYING WITH ITS POLICIES AND PROCEDURES RELATED TO EHS MATTERS.
11. CONTRACTOR MUST PROVIDE ALL ROAD CLOSURE SIGNS IN ACCORDANCE WITH THE MANUAL ON UNIFORM TRAFFIC CONTROL DEVICES (MUTCD) AND NCDOT STANDARDS.

NEW WORK KEYNOTES:

A — NEW ASPHALT PAVEMENT, SEE DETAIL ON SHEET C502.

B — NEW STEEL DOUBLE SWING GATE. SEE DETAIL SHEET C503.

C — HOT APPLY THERMOPLASTIC 8" WIDE WHITE CROSSWALK MARKINGS SPACED 6' APART.

D — HOT APPLY WHITE THERMOPLASTIC STOP BAR, MIN 24" X 96" SET 4' MIN FROM EDGE OF CROSSWALK MARKING.

E — REMARK EXISTING PAVEMENT WITH PROPER PAVEMENT MARKINGS.

LEGEND

| | |
|---|---|
| STORMWATER PIPE | ROADS/DRIVEWAY/PARKING |
| STORMWATER DITCH/SWALE | ROADWAY CENTERLINE |
| STORMWATER MANHOLE | AIRFIELD SURFACE |
| STORMWATER INLET | BUILDING |
| STORMWATER HEADWALL | WALL |
| | FENCE |

PAVEMENT MARKING NOTES:

1. PAVEMENT MARKINGS MUST BE HOT-APPLIED THERMOPLASTIC PAVEMENT MARKING MATERIAL MEETING NCDOT SPECIFICATIONS AND CONFORMING TO THE MANUAL ON UNIFORM TRAFFIC CONTROL DEVICES (MUTCD).
2. MATERIAL SHALL BE PRE-MIXED REFLECTORIZED THERMOPLASTIC WITH EMBEDDED GLASS BEADS AND ADDITIONAL SURFACE-APPLIED BEADS.
3. THERMOPLASTIC SHALL BE APPLIED AT THE FOLLOWING RATES:
   - 3.1. 90 MILS: CROSSWALK LINES, CENTER LINES, AND LANE LINES
   - 3.2. 120 MILS: STOP BARS, TRANSVERSE BANDS, EDGE LINES, GORE LINES, AND DIAGONALS
4. SURFACE AND AMBIENT TEMPERATURES MUST BE AT LEAST 50 DEGREES FAHRENHEIT AND RISING FOR APPLICATION.

NOTE:

THIS PROJECT WILL NOT MODIFY ANY EXISTING SIGNAL LOOPS OR SIGNAL HEADS AT THIS INTERSECTION. THIS WILL ONLY SERVE AS AN EMERGENCY MEANS OF EGRESS.

ENVIRONMENTAL NOTES:

1. CONTRACTOR MUST ENSURE THAT NO SEDIMENT ENTERS THE STREAM OR ADJACENT WETLANDS.
2. AVOID GROUND DISTURBANCE WITHIN THE STREAM & WETLANDS TO MAXIMUM EXTENT POSSIBLE.
3. ALL SOILS ARE ASSUMED TO CONTAIN PFAS. ALL SOIL MUST REMAIN ON SITE.

GRAPHIC SCALE

20 0 10 20 40 80

( IN FEET )
1 inch = 20 ft.


DISCLOSURE OF INFORMATION

CONTRACTOR SHALL COMPLY AS FOLLOWS:

(A) THE CONTRACTOR SHALL NOT RELEASE TO ANYONE OUTSIDE THE CONTRACTOR'S ORGANIZATION ANY UNCLASSIFIED INFORMATION, REGARDLESS OF MEDIUM (E.G., FILM, TAPE, DOCUMENT), PERTAINING TO ANY PART OF THIS CONTRACT OR ANY PROGRAM RELATED TO THIS CONTRACT, UNLESS:
(1) THE CONTRACTING OFFICER HAS GIVEN PRIOR WRITTEN APPROVAL; OR
(2) THE INFORMATION IS OTHERWISE IN THE PUBLIC DOMAIN BEFORE THE DATE OF RELEASE.

(B) REQUESTS FOR APPROVAL SHALL IDENTIFY THE SPECIFIC INFORMATION TO BE RELEASED, THE MEDIUM TO BE USED, AND THE PURPOSE FOR THE RELEASE. THE CONTRACTOR SHALL SUBMIT ITS REQUEST TO THE CONTRACTING OFFICER AT LEAST 45 DAYS BEFORE THE PROPOSED DATE FOR RELEASE.

(C) THE CONTRACTOR AGREES TO INCLUDE A SIMILAR REQUIREMENT IN EACH SUBCONTRACT UNDER THIS CONTRACT. SUBCONTRACTORS SHALL SUBMIT REQUESTS FOR AUTHORIZATION TO RELEASE THROUGH THE PRIME CONTRACTOR TO THE CONTRACTING OFFICER.


**REVISED FINAL**

**C103**

DEPARTMENT OF THE NAVY NAVAL FACILITIES ENGINEERING COMMAND
MARINE CORPS BASE
CAMP LEJEUNE, NORTH CAROLINA

20-0061
REPAIR WASHOUT ON
RIFLE RANGE ROAD
SITE PLAN – INTERSECTION

DES. M. HORNE
DR. M. HORNE
CHK. C. MAAS, PE
SUBMITTED BY: M. HORNE
DESIGN DIR. C. MAAS, PE
DATE: 7/30/2026

SIZE E1 | CODE IDENT NO. 80091 | PWO DRAWING NO. 60044647
CONST. CONTR. NO. N40085-20-B-0061
SCALE: AS SHOWN | SPEC. 05-20-0061 | SHEET 5 OF 8

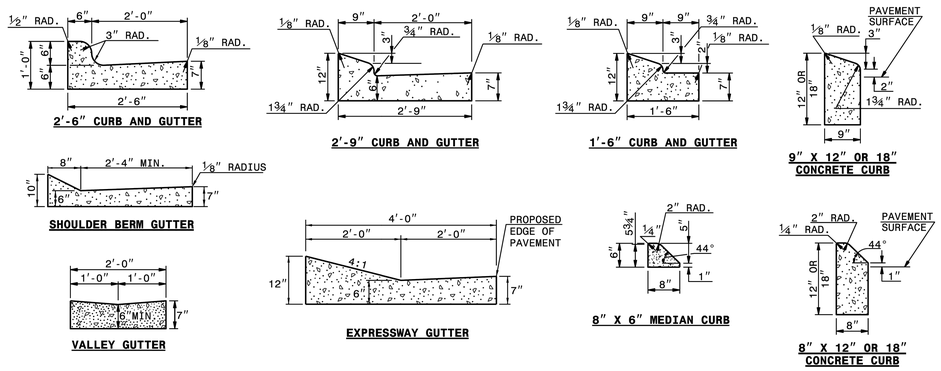


SECTION VIEW OF CURBS OR CURBS AND GUTTERS

GENERAL NOTES:
- PLACE CONTRACTION JOINTS AT 10' INTERVALS, EXCEPT THAT A 15' SPACING MAY BE USED WHEN A MACHINE IS USED OR WHEN SATISFACTORY SUPPORT FOR THE FACE FORM CAN BE OBTAINED WITHOUT THE USE OF TEMPLATES AT 10' INTERVALS.
- JOINT SPACING MAY BE ALTERED IF REQUIRED BY THE ENGINEER.
- CONTRACTION JOINTS MAY BE INSTALLED WITH THE USE OF TEMPLATES OR FORMED BY OTHER APPROVED METHODS. CONSTRUCT NON-TEMPLATE FORMED JOINTS A MIN. OF 1½" DEEP.
- FILL ALL CONSTRUCTION JOINTS, EXCEPT IN 8"x6" MEDIAN CURB, WITH JOINT FILLER AND SEALER.
- SPACE EXPANSION JOINTS AT 90' INTERVALS AND ADJACENT TO ALL RIGID OBJECTS.

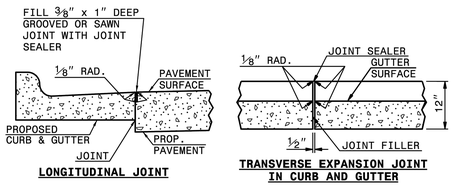


LONGITUDINAL JOINT

TRANSVERSE EXPANSION JOINT IN CURB AND GUTTER

SECTION VIEW OF JOINTS

STATE OF NORTH CAROLINA
DEPT. OF TRANSPORTATION
DIVISION OF HIGHWAYS
RALEIGH, N.C.

1-24

ROADWAY STANDARD DRAWING FOR
**CONCRETE CURB, GUTTER AND CURB & GUTTER**

SHEET 1 OF 3
**846.01**

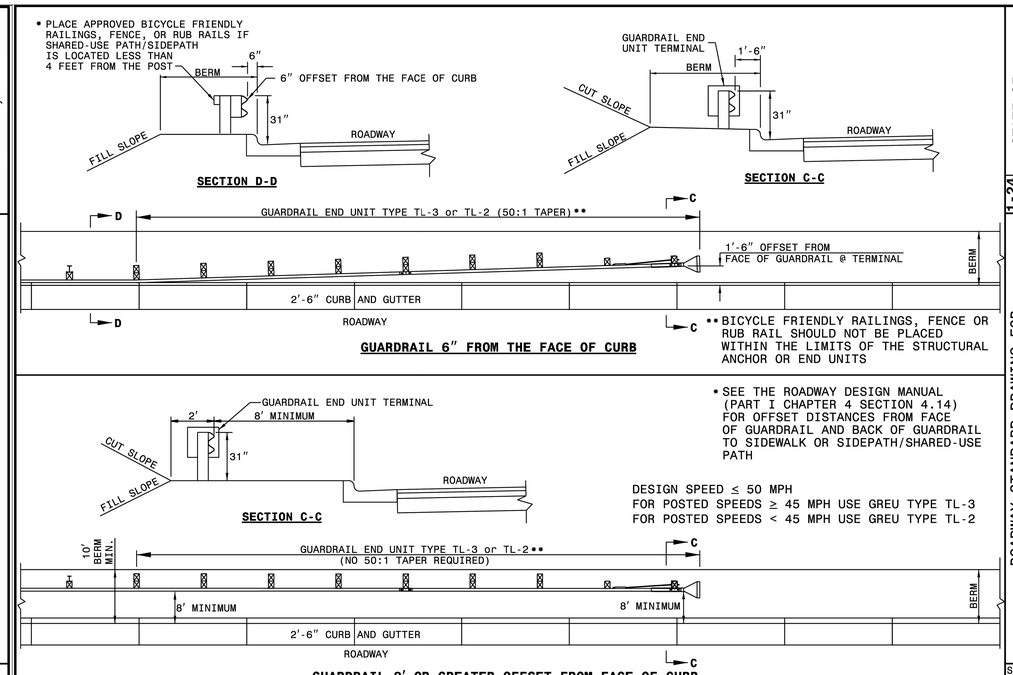


STATE OF NORTH CAROLINA
DEPT. OF TRANSPORTATION
DIVISION OF HIGHWAYS
RALEIGH, N.C.

1-24

ROADWAY STANDARD DRAWING FOR
**GUARDRAIL PLACEMENT**
GUARDRAIL TREATMENT AT CURB AND GUTTER

SHEET 12 OF 15
**862.01**

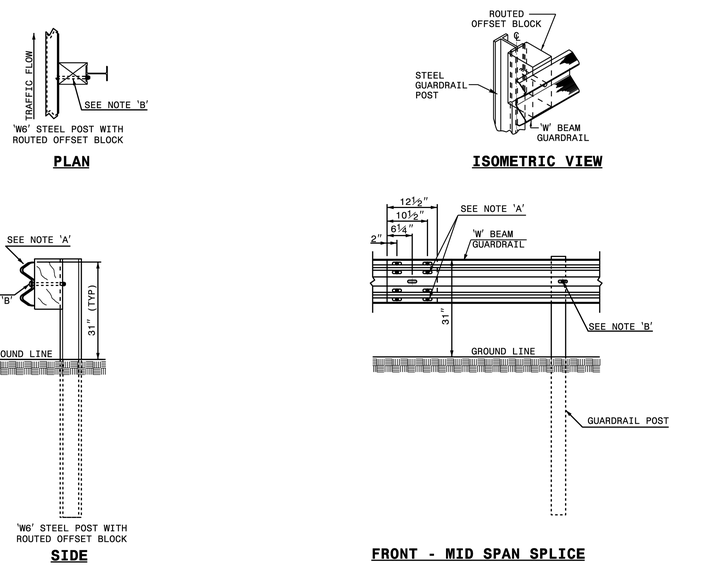


NOTES:
A - 5/8" DIA. BUTTON HEAD SPLICE BOLT 1¼" LONG (8 REQ. PER SPLICE JOINT).
B - 5/8" DIA. BUTTON HEAD BOLT 7½"/9" LONG WITH NUT FOR BOLTING 6"/8" ROUTED OFFSET BLOCK TO STEEL POSTS.
C - FIELD PUNCHING OF HOLES INTO GUARDRAIL AS DIRECTED BY THE ENGINEER.

TYPICAL GUARDRAIL AND GUARDRAIL POST ALTERNATIVES

STATE OF NORTH CAROLINA
DEPT. OF TRANSPORTATION
DIVISION OF HIGHWAYS
RALEIGH, N.C.

1-24

ROADWAY STANDARD DRAWING FOR
**GUARDRAIL INSTALLATION**

SHEET 6 OF 9
**862.02**

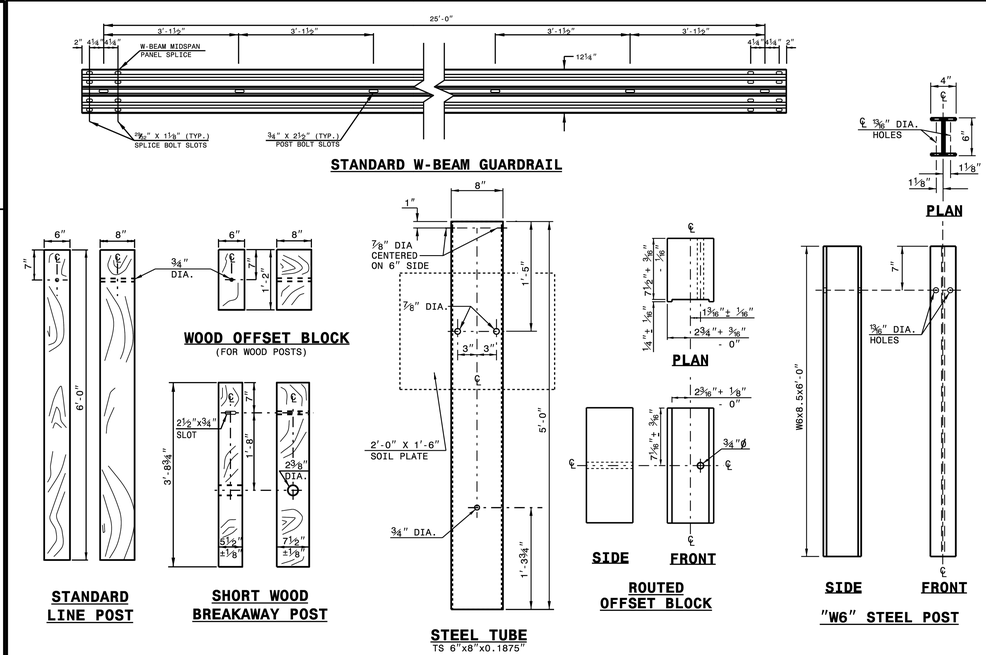


STATE OF NORTH CAROLINA
DEPT. OF TRANSPORTATION
DIVISION OF HIGHWAYS
RALEIGH, N.C.

1-24

ROADWAY STANDARD DRAWING FOR
**GUARDRAIL INSTALLATION**

SHEET 7 OF 9
**862.02**

GENERAL NOTES:

1. CONTRACTOR MUST LOCATE ALL UNDERGROUND UTILITIES, INCLUDING TELECOMMUNICATIONS AND COMMERCIAL CABLING, PRIOR TO GROUND DISTURBING ACTIVITIES. NOTIFY BASE TELEPHONE OF ANY CONFLICTS WITH ANY DIRECT BURY OR CONDUIT COMMUNICATION UTILITIES 30 DAYS PRIOR TO DIGGING.
2. CONTRACTOR MUST FIELD VERIFY ALL MEASUREMENTS.
3. PRESERVE AND PROTECT ALL EXISTING UTILITIES, INCLUDING TELECOMMUNICATIONS AND COMMERCIAL CABLING.
4. CONTRACTOR IS RESPONSIBLE FOR ANY DAMAGE TO UTILITIES, INCLUDING TELECOMMUNICATIONS AND COMMERCIAL CABLING.
5. CONTRACTOR IS RESPONSIBLE TO COORDINATE COMMERCIAL CABLING WITH COMMERCIAL CABLING PROVIDERS
6. ALL UTILITY WORK MUST BE IN ACCORDANCE WITH APPLICABLE STATE AND BASE CODES.
7. CONTRACTOR MUST COORDINATE ALL CONSTRUCTION ACTIVITIES WITH THE CONTRACTING OFFICER.
8. SOD ANY DISTURBED AREAS UPON COMPLETION OF CONSTRUCTION.
9. JOBSITE MUST BE KEPT CLEAR OF ALL DEBRIS AND TRASH.
10. CONTRACTOR MUST BE RESPONSIBLE FOR ALL ASPECTS OF ENVIRONMENTAL, HEALTH AND SAFETY (EHS). CONTRACTOR SHALL BE RESPONSIBLE FOR COMPLYING WITH ITS POLICIES AND PROCEDURES RELATED TO EHS MATTERS..


DISCLOSURE OF INFORMATION

CONTRACTOR SHALL COMPLY AS FOLLOWS:

(A) THE CONTRACTOR SHALL NOT RELEASE TO ANYONE OUTSIDE THE CONTRACTOR'S ORGANIZATION ANY UNCLASSIFIED INFORMATION, REGARDLESS OF MEDIUM (E.G., FILM, TAPE, DOCUMENT), PERTAINING TO ANY PART OF THIS CONTRACT OR ANY PROGRAM RELATED TO THIS CONTRACT, UNLESS:
(1) THE CONTRACTING OFFICER HAS GIVEN PRIOR WRITTEN APPROVAL; OR
(2) THE INFORMATION IS OTHERWISE IN THE PUBLIC DOMAIN BEFORE THE DATE OF RELEASE.

(B) REQUESTS FOR APPROVAL SHALL IDENTIFY THE SPECIFIC INFORMATION TO BE RELEASED, THE MEDIUM TO BE USED, AND THE PURPOSE FOR THE RELEASE. THE CONTRACTOR SHALL SUBMIT ITS REQUEST TO THE CONTRACTING OFFICER AT LEAST 45 DAYS BEFORE THE PROPOSED DATE FOR RELEASE.

(C) THE CONTRACTOR AGREES TO INCLUDE A SIMILAR REQUIREMENT IN EACH SUBCONTRACT UNDER THIS CONTRACT. SUBCONTRACTORS SHALL SUBMIT REQUESTS FOR AUTHORIZATION TO RELEASE THROUGH THE PRIME CONTRACTOR TO THE CONTRACTING OFFICER.


**REVISED FINAL**

**C501**

DEPARTMENT OF THE NAVY NAVAL FACILITIES ENGINEERING COMMAND
MARINE CORPS BASE
CAMP LEJEUNE, NORTH CAROLINA

| | |
|---|---|
| DES. | M. HORNE |
| DR. | M. HORNE |
| CHK. | C. MAAS, PE |
| SUBMITTED BY: | M. HORNE |
| DESIGN DIR. | C. MAAS, PE |
| DATE: | 7/30/2026 |

20-0061
REPAIR WASHOUT ON RIFLE RANGE ROAD
GUARDRAIL & CURBING DETAILS

| SIZE | CODE IDENT NO. | PWO DRAWING NO. |
|---|---|---|
| E1 | 80091 | 60044648 |
| | | CONST. CONTR. NO. N40085-20-B-0061 |

SCALE: AS SHOWN | SPEC. 05-20-0061 | SHEET 6 OF 8

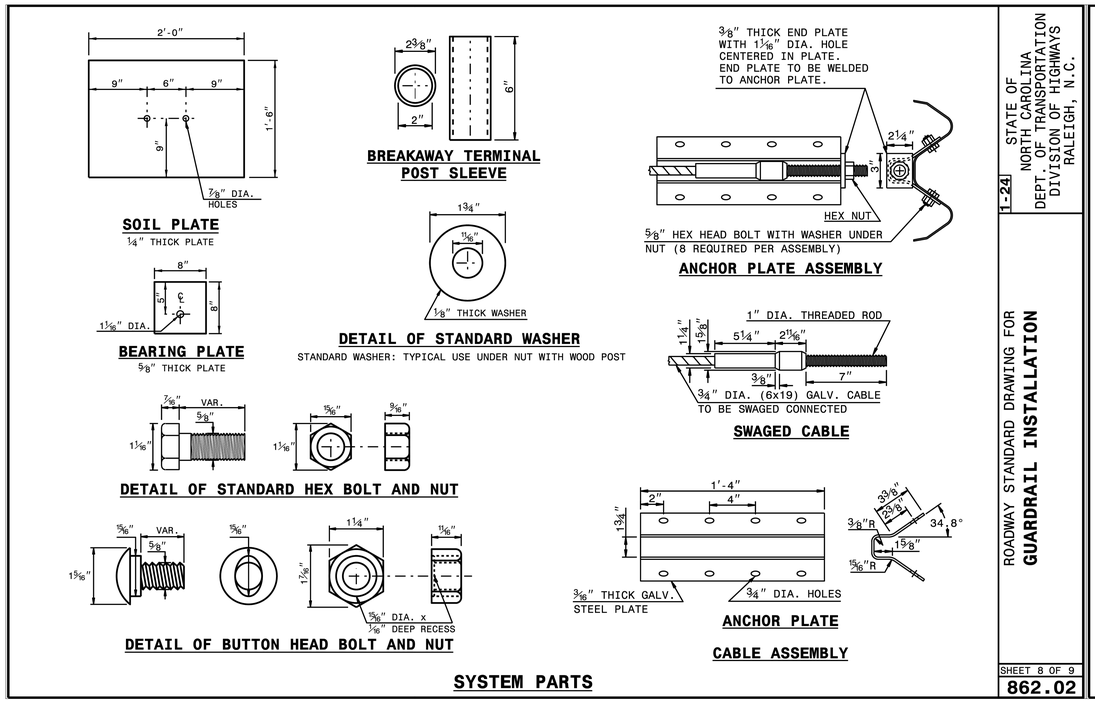


SYSTEM PARTS

STATE OF NORTH CAROLINA
DEPT. OF TRANSPORTATION
DIVISION OF HIGHWAYS
RALEIGH, N.C.

1-24

ROADWAY STANDARD DRAWING FOR
**GUARDRAIL INSTALLATION**

SHEET 8 OF 9

862.02

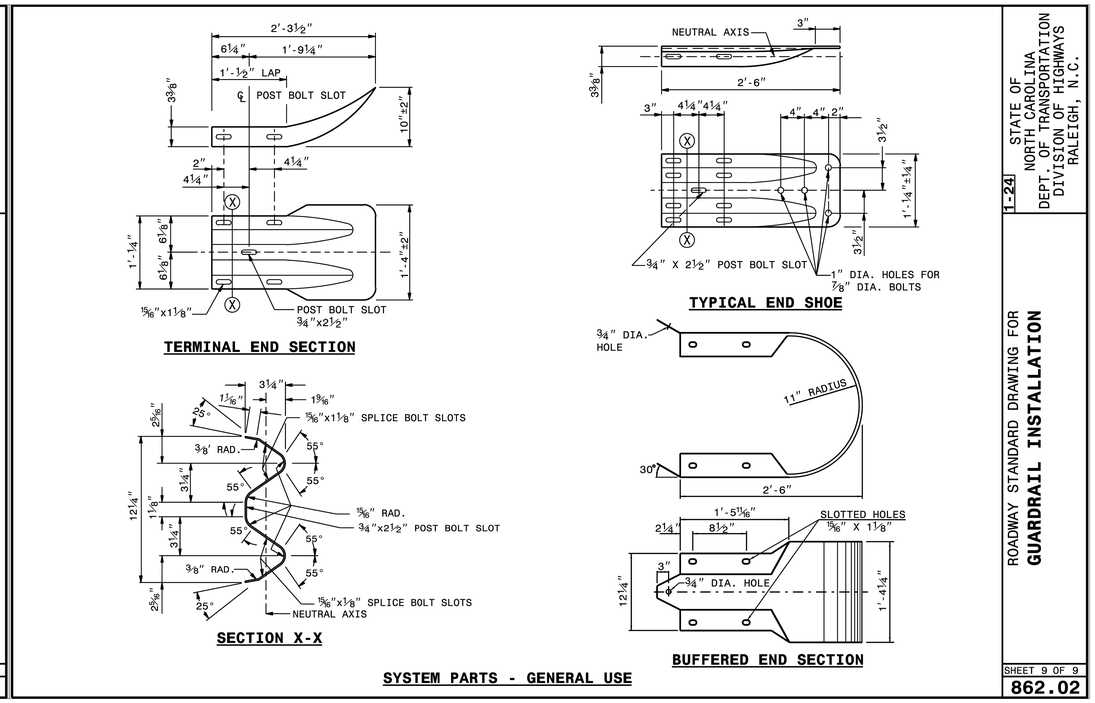


SYSTEM PARTS - GENERAL USE

STATE OF NORTH CAROLINA
DEPT. OF TRANSPORTATION
DIVISION OF HIGHWAYS
RALEIGH, N.C.

1-24

ROADWAY STANDARD DRAWING FOR
**GUARDRAIL INSTALLATION**

SHEET 9 OF 9

862.02

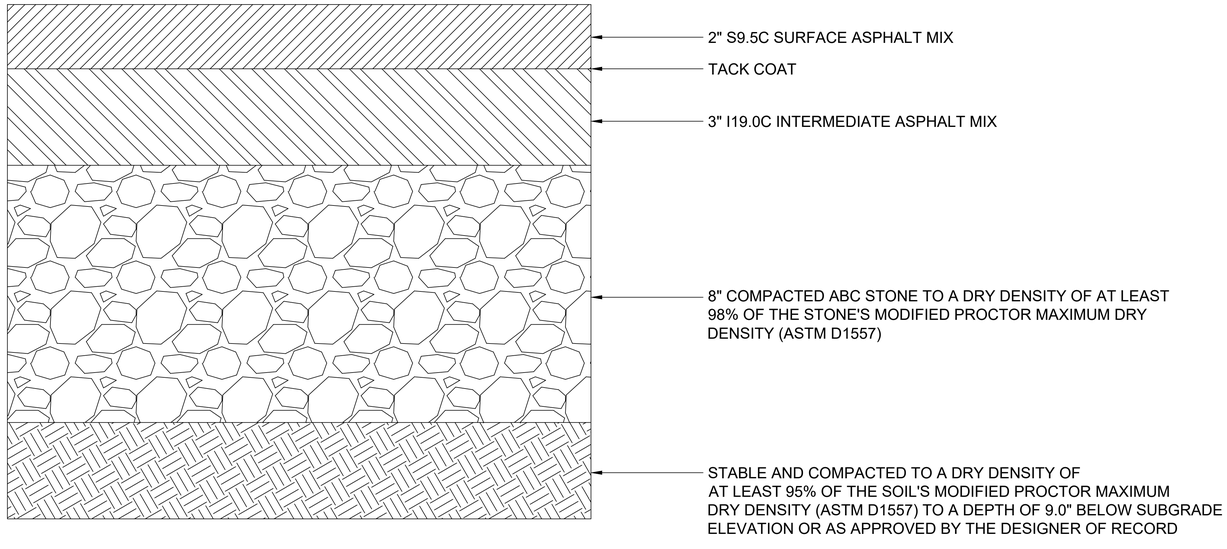


ASPHALT PAVEMENT CROSS SECTION
NTS

GENERAL NOTES:

1. CONTRACTOR MUST LOCATE ALL UNDERGROUND UTILITIES, INCLUDING TELECOMMUNICATIONS AND COMMERCIAL CABLING, PRIOR TO GROUND DISTURBING ACTIVITIES. NOTIFY BASE TELEPHONE OF ANY CONFLICTS WITH ANY DIRECT BURY OR CONDUIT COMMUNICATION UTILITIES 30 DAYS PRIOR TO DIGGING.
2. CONTRACTOR MUST FIELD VERIFY ALL MEASUREMENTS.
3. PRESERVE AND PROTECT ALL EXISTING UTILITIES, INCLUDING TELECOMMUNICATIONS AND COMMERCIAL CABLING.
4. CONTRACTOR IS RESPONSIBLE FOR ANY DAMAGE TO UTILITIES, INCLUDING TELECOMMUNICATIONS AND COMMERCIAL CABLING.
5. CONTRACTOR IS RESPONSIBLE TO COORDINATE COMMERCIAL CABLING WITH COMMERCIAL CABLING PROVIDERS
6. ALL UTILITY WORK MUST BE IN ACCORDANCE WITH APPLICABLE STATE AND BASE CODES.
7. CONTRACTOR MUST COORDINATE ALL CONSTRUCTION ACTIVITIES WITH THE CONTRACTING OFFICER.
8. SOD ANY DISTURBED AREAS UPON COMPLETION OF CONSTRUCTION.
9. JOBSITE MUST BE KEPT CLEAR OF ALL DEBRIS AND TRASH.
10. CONTRACTOR MUST BE RESPONSIBLE FOR ALL ASPECTS OF ENVIRONMENTAL, HEALTH AND SAFETY (EHS). CONTRACTOR SHALL BE RESPONSIBLE FOR COMPLYING WITH ITS POLICIES AND PROCEDURES RELATED TO EHS MATTERS..


DISCLOSURE OF INFORMATION

CONTRACTOR SHALL COMPLY AS FOLLOWS:

(A) THE CONTRACTOR SHALL NOT RELEASE TO ANYONE OUTSIDE THE CONTRACTOR'S ORGANIZATION ANY UNCLASSIFIED INFORMATION, REGARDLESS OF MEDIUM (E.G., FILM, TAPE, DOCUMENT), PERTAINING TO ANY PART OF THIS CONTRACT OR ANY PROGRAM RELATED TO THIS CONTRACT, UNLESS:
(1) THE CONTRACTING OFFICER HAS GIVEN PRIOR WRITTEN APPROVAL; OR
(2) THE INFORMATION IS OTHERWISE IN THE PUBLIC DOMAIN BEFORE THE DATE OF RELEASE.

(B) REQUESTS FOR APPROVAL SHALL IDENTIFY THE SPECIFIC INFORMATION TO BE RELEASED, THE MEDIUM TO BE USED, AND THE PURPOSE FOR THE RELEASE. THE CONTRACTOR SHALL SUBMIT ITS REQUEST TO THE CONTRACTING OFFICER AT LEAST 45 DAYS BEFORE THE PROPOSED DATE FOR RELEASE.

(C) THE CONTRACTOR AGREES TO INCLUDE A SIMILAR REQUIREMENT IN EACH SUBCONTRACT UNDER THIS CONTRACT. SUBCONTRACTORS SHALL SUBMIT REQUESTS FOR AUTHORIZATION TO RELEASE THROUGH THE PRIME CONTRACTOR TO THE CONTRACTING OFFICER.


**REVISED FINAL**

**C502**

DEPARTMENT OF THE NAVY NAVAL FACILITIES ENGINEERING COMMAND
MARINE CORPS BASE
CAMP LEJEUNE, NORTH CAROLINA

DES. M. HORNE
DR. M. HORNE
CHK. C. MAAS, PE
SUBMITTED BY: M. HORNE
DESIGN DIR. C. MAAS, PE
DATE: 7/30/2026

20-0061
REPAIR WASHOUT ON
RIFLE RANGE ROAD
GUARDRAIL & ASPHALT DETAILS

| SIZE | CODE IDENT NO. | PWO DRAWING NO. |
|---|---|---|
| E1 | 80091 | 60044649 |

CONST. CONTR. NO. N40085-20-B-0061

SCALE: AS SHOWN | SPEC. 05-20-0061 | SHEET 7 OF 8

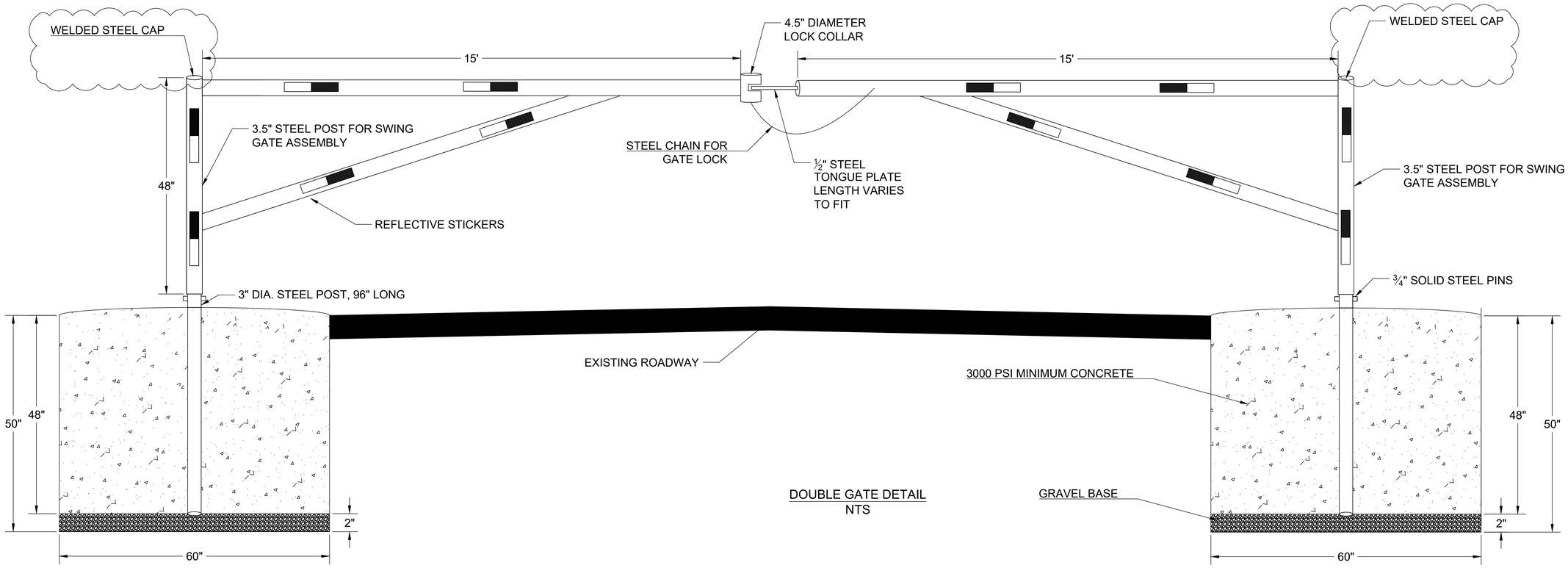


DOUBLE GATE DETAIL
NTS

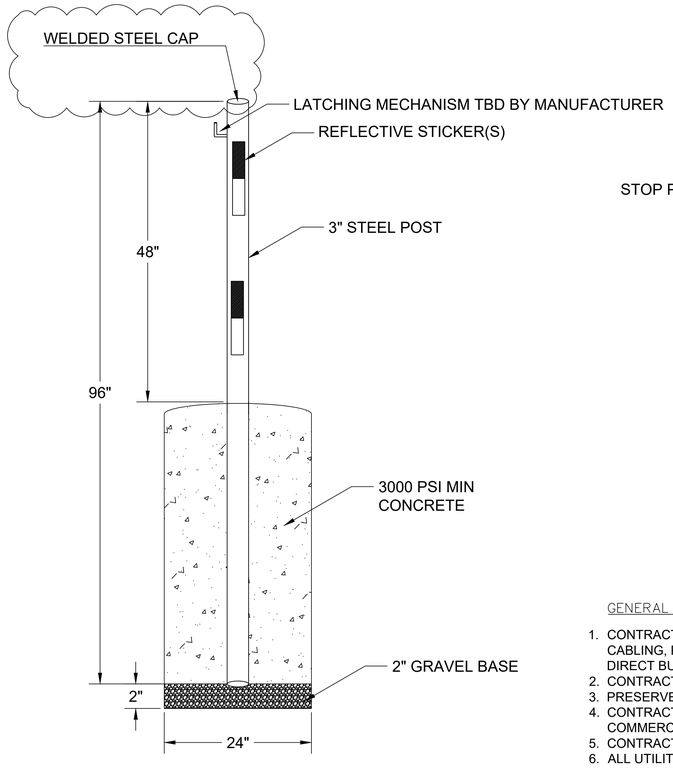


STOP POLE DETAIL
NTS

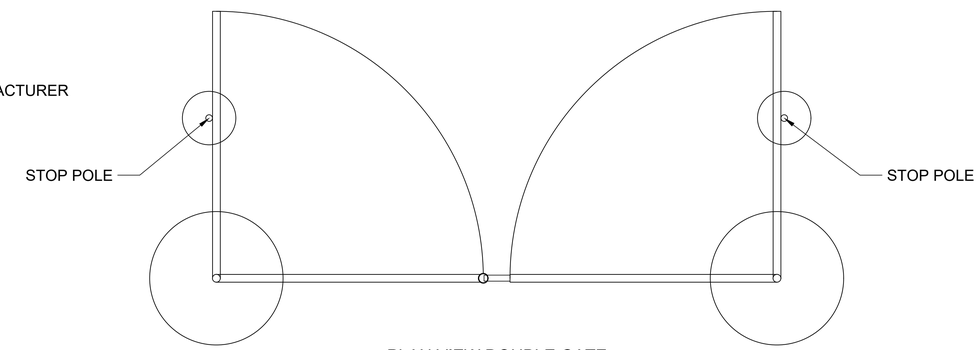


PLAN VIEW DOUBLE GATE
NTS

R11-2 ROAD CLOSED SIGN
NTS

NOTES:

1. ALL EXPOSED STEEL ON GATES MUST BE PRIMED AND PAINTED HIGH VISIBILITY YELLOW.
2. REFLECTIVE TAPE MUST BE AFFIXED TO THE GATE AS SHOWN ON BOTH SIDES OF THE GATE.
3. LOCK COLLAR MUST BE OPEN ON TOP.
4. LOCKS WILL BE PROVIDED BY THE GOVERNMENT
5. TONGUE MUST BE ½" STEEL PLATE. MAX TONGUE LENGTH IS 2 FEET.
6. PROVIDE AN R11-2 "ROAD CLOSED" SIGN ON EACH LEAF OF THE GATE ON BOTH SIDES.

GENERAL NOTES:

1. CONTRACTOR MUST LOCATE ALL UNDERGROUND UTILITIES, INCLUDING TELECOMMUNICATIONS AND COMMERCIAL CABLING, PRIOR TO GROUND DISTURBING ACTIVITIES. NOTIFY BASE TELEPHONE OF ANY CONFLICTS WITH ANY DIRECT BURY OR CONDUIT COMMUNICATION UTILITIES 30 DAYS PRIOR TO DIGGING.
2. CONTRACTOR MUST FIELD VERIFY ALL MEASUREMENTS.
3. PRESERVE AND PROTECT ALL EXISTING UTILITIES, INCLUDING TELECOMMUNICATIONS AND COMMERCIAL CABLING.
4. CONTRACTOR IS RESPONSIBLE FOR ANY DAMAGE TO UTILITIES, INCLUDING TELECOMMUNICATIONS AND COMMERCIAL CABLING.
5. CONTRACTOR IS RESPONSIBLE TO COORDINATE COMMERCIAL CABLING WITH COMMERCIAL CABLING PROVIDERS
6. ALL UTILITY WORK MUST BE IN ACCORDANCE WITH APPLICABLE STATE AND BASE CODES.
7. CONTRACTOR MUST COORDINATE ALL CONSTRUCTION ACTIVITIES WITH THE CONTRACTING OFFICER.
8. SOD ANY DISTURBED AREAS UPON COMPLETION OF CONSTRUCTION.
9. JOBSITE MUST BE KEPT CLEAR OF ALL DEBRIS AND TRASH.
10. CONTRACTOR MUST BE RESPONSIBLE FOR ALL ASPECTS OF ENVIRONMENTAL, HEALTH AND SAFETY (EHS). CONTRACTOR SHALL BE RESPONSIBLE FOR COMPLYING WITH ITS POLICIES AND PROCEDURES RELATED TO EHS MATTERS..


DISCLOSURE OF INFORMATION

CONTRACTOR SHALL COMPLY AS FOLLOWS:

(A) THE CONTRACTOR SHALL NOT RELEASE TO ANYONE OUTSIDE THE CONTRACTOR'S ORGANIZATION ANY UNCLASSIFIED INFORMATION, REGARDLESS OF MEDIUM (E.G., FILM, TAPE, DOCUMENT), PERTAINING TO ANY PART OF THIS CONTRACT OR ANY PROGRAM RELATED TO THIS CONTRACT, UNLESS:
(1) THE CONTRACTING OFFICER HAS GIVEN PRIOR WRITTEN APPROVAL; OR
(2) THE INFORMATION IS OTHERWISE IN THE PUBLIC DOMAIN BEFORE THE DATE OF RELEASE.

(B) REQUESTS FOR APPROVAL SHALL IDENTIFY THE SPECIFIC INFORMATION TO BE RELEASED, THE MEDIUM TO BE USED, AND THE PURPOSE FOR THE RELEASE. THE CONTRACTOR SHALL SUBMIT ITS REQUEST TO THE CONTRACTING OFFICER AT LEAST 45 DAYS BEFORE THE PROPOSED DATE FOR RELEASE.

(C) THE CONTRACTOR AGREES TO INCLUDE A SIMILAR REQUIREMENT IN EACH SUBCONTRACT UNDER THIS CONTRACT. SUBCONTRACTORS SHALL SUBMIT REQUESTS FOR AUTHORIZATION TO RELEASE THROUGH THE PRIME CONTRACTOR TO THE CONTRACTING OFFICER.


**REVISED FINAL**

**C503**

DEPARTMENT OF THE NAVY NAVAL FACILITIES ENGINEERING COMMAND
MARINE CORPS BASE
CAMP LEJEUNE, NORTH CAROLINA

DES. M. HORNE
DR. M. HORNE
CHK. C. MAAS, PE
SUBMITTED BY: M. HORNE
DESIGN DIR. C. MAAS, PE
DATE: 7/30/2026

20-0061
REPAIR WASHOUT ON RIFLE RANGE ROAD
GATE DETAILS

SIZE E1 | CODE IDENT NO. 80091 | PWO DRAWING NO. 60044650
CONST. CONTR. NO. N40085-20-B-0061
SCALE: AS SHOWN | SPEC. 05-20-0061 | SHEET 8 OF 8