INCH-POUND
ATPD-2301A
DRAFT
SUPERSEDING
ATPD-2301
16 JUNE 2014

AUTOMOTIVE TANK PURCHASE DESCRIPTION
TRACTOR, WHEELED, ALL WHEEL DRIVE; WITH ATTACHMENTS
(HIGH MOBILITY ENGINEER EXCAVATOR)

This purchase description is approved for use by the Ground Vehicle Systems Center and is available for use by all Departments and Agencies of the Department of Defense.

1. SCOPE.

1.1 Scope. This specification covers pneumatic tired, diesel engine driven, all-wheel drive tractors with attachments, for excavation of small emplacements, material handling, and general construction tasks; with tactical mobility over rough terrain and high mobility on roadways. The basic tractor, hereinafter referred to as "tractor", is classified as a self-propelled construction vehicle, meeting federal highway safety standards as well as emission standards for Non-Road Engines. Emissions standards follow exemption Title 40 of the Code of Federal Regulations (CFR), Section 89.908(a)1. All tractors (see 1.2) are conveyable by rail, marine, highway and air modes as defined herein. The tractor will include electronic over hydraulic (EOH) controls. The EOH controls the loader, excavator, auxiliary hydraulic, and stabilizer system. The EOH supports future integration of autonomous technologies.

1.2 Type. The tractors will be of the following types, with attachments as stipulated (see 6.2):

Type I – Heavy; C-130 aircraft transportable and Low Velocity Airdrop (LVAD) capable; CH-47 helicopter transportable within two lifts (objective)
Type II – Light (under 16,600 lbs); C-130 aircraft transportable and Low Velocity Airdrop (LVAD) capable; CH-47 helicopter transportable in a single lift (threshold)
Type IV (Type I with Electronic Over Hydraulic (EOH)) – Heavy; C-130 aircraft transportable and Low Velocity Airdrop (LVAD) capable; CH-47 helicopter transportable within two lifts (objective)

Comments, suggestions, or questions on this document should be addressed to U.S. Army CCDC, Ground Vehicle Systems Center, ATTN: Standardization Office, FCDD-GVS-IES, MS #267, 6501 E. Mile Road, Detroit Arsenal, MI 48397-5000 or sent by email to usarmy.detroit.ccdc-gvsc.mbx.standardization@mail.mil. Since contact information can change, you may want to verify the currency of this address information using the ASSIST Online database at https://assist.dla.mil.

AMSC N/A FSC 2420

DISTRIBUTION STATEMENT A. Approved for public release; distribution is unlimited. OPSEC10709.

2. APPLICABLE DOCUMENTS.

2.1 General. The publications listed in this section are specified in sections 3 and 4 of this purchase description. This section does not include publications cited in other sections of this purchase description or recommended for additional information or as examples. While every effort has been made to ensure the completeness of this list, users of this document are cautioned that they must meet all specified requirements of publications cited in sections 3 and 4 of this specification, whether or not they are listed.

2.2 Government documents.

2.2.1 Specifications, standards, and handbooks. The following specifications, standards, and handbooks of the exact revision listed below form a part of this purchase description to the extent specified herein.

INTERNATIONAL STANDARDIZATION AGREEMENTS

AEP-4074	Auxilliary Power Unit Connections for Starting Tactical Land Vehicles
STANAG-3747	Guide Specifications for Aviation Turbine Fuels

(Copies of this publication is available online at https://nso.nato.int/.)

FEDERAL SPECIFICATIONS

A-A-393	–	Extinguisher, Fire, Dry Chemical (Hand Portable)
A-A-50271	–	Plate, Identification
A-A-52550	–	Pintle Assembly, Towing, Manual Release, 18 000, 40 000 and 100 000 LBS Capacity
A-A-52624	–	Antifreeze, Multi-Engine Type
A-A-59592	–	Can, Fuel, Military: 20-Liter Capacity

DEPARTMENT OF DEFENSE SPECIFICATIONS

MIL-DTL-32361	–	Composite Light, Tail Stop, Turn and Marker
MIL-DTL-53039	–	Camouflage Coating, Solvent Based, Chemical Agent Resistant
MIL-DTL-53072	–	Chemical Agent Resistance Coating (CARC) System Application Procedures and Quality Control Inspection
MIL-DTL-64159	–	Coating, Water Dispersible Aliphatic Polyurethane, Chemical Agent Resistant
MIL-DTL-81940/1	–	Valve, Sampling and Bleed, Hydraulic, Type II Systems
MIL-DTL-83133	–	Turbine Fuel, Aviation, Kerosene Type, JP-8 (NATO F-34) and NATO F-35

MIL-PRF-11021	–	Switch, Vehicular Lights: 24 Volt DC
MIL-PRF-2104	–	Lubricating Oil, Internal Combustion Engine, Combat/Tactical Service
MIL-PRF-32626	–	Lubricating Oil, Internal Combustion Engine, Synthetic Base
MIL-PRF-46176	–	Brake Fluid, Silicone, Automotive, All Weather, Operational and Preservative, Metric
MIL-PRF-62048	–	Air Cleaners, Automotive: Heavy Duty, Dry-Type
MS75020	–	Connector, Plug, Electrical-12 Contact, Intervehicular, 28 Volt
MS52126	–	Composite Light-Front Turn, Park and Marker
MS51318	–	Headlight, Blackout, 24 Volt Waterproof

DEPARTMENT OF DEFENSE STANDARDS

MIL-STD-209	–	Interface Standard for Lifting and Tiedown Provisions
MIL-STD-461	–	Requirements for the Control of Electromagnetic Interference Characteristics of Subsystems and Equipment
MIL-STD-464	–	Electromagnetic Environmental Effects Requirements for Systems
MIL-STD-810	–	Environmental Test Methods and Engineering Guidelines
MIL-STD-814	–	Tiedown, Suspension, and Extraction Provisions on Military Materiel for Airdrop, Requirements for
MIL-STD-882		Department of Defense Standard Practice System Safety
MIL-STD-889	–	Galvanic Compatibility of Electrically Conductive Materials
MIL-STD-913	–	Requirements for the Certification of Externally Transported Military Equipment by Department of Defense Rotary Wing Aircraft
MIL-STD-1180	–	Safety Standards for Military Ground Vehicles
MIL-STD-1366	–	Interface Standard for Transportability Criteria
MIL-STD-1472	–	Human Engineering
MIL-STD-1791	–	Designing for Internal Aerial Delivery in Fixed Wing Aircraft
MIL-STD-2169	–	High Altitude Electro-Magnetic Pulse Environment

DEPARTMENT OF DEFENSE HANDBOOK

MIL-HDBK-669	–	Loading Environment and Related Requirements for Platform Rigged Airdrop Materiel

(Copies of these publications are available online at https://quicksearch.dla.mil.)

2.2.2 Other Government documents, drawings, and publications. The following other Government documents, drawings, and publications form a part of this document to the extent specified herein. Unless otherwise specified, the issues are those in effect on the date of the solicitation.

CODE OF FEDERAL REGULATIONS

Title 29, Part 1910	–	Occupational Safety and Health Standards
Title 29, Part 1926	–	Safety and Health Regulations for Construction

(Copies of these publications are available online at https://www.govinfo.gov/app/collection/cfr/.)

ARMY TACOM DRAWINGS

13229E8014	–	Rifle Mounting Bracket
13229E8016	–	Rifle Mounting Bracket
12585018	–	Paint System for Exterior and Interior Army Materiel, Revision B

(Copies of these publications can be requested by email at usarmy.detroit.devcom-gvsc.mbx.drawing-request@army.mil.)

ARMY TACOM PURCHASE DESCRIPTIONS

ATPD-2206	–	Batteries, Storage: Lead-Acid, "Maintenance Free" (Metric)

(Copies of this publication can be requested by email at usarmy.detroit.devcom-gvsc.mbx.standardization@army.mil.)

ARMY TACOM REPORTS

REPORT NO. CR-82-588-003 Rev 1, Feb 1988 – Design Guide for Vehicle Diagnostic Connector Assemblies

(Copies of this publication can be requested from the PD-TMDE Redstone Arsenal at apats@redstone.army.mil).

2.3 Non-Government publications. The following documents form a part of this document to the extent specified herein. Unless otherwise specified, the issues of these publications are those cited in the solicitation or contract.

AMERICAN NATIONAL STANDARDS INSTITUTE (ANSI)

ANSI Z535.1	–	Safety Colors
ANSI Z535.2	–	American National Standard for Environmental and Facility Safety Signs
ANSI Z535.3	–	Criteria for Safety Symbols

(Copies of these publications are available online at https://www.ansi.org/.)

AMERICAN SOCIETY FOR TESTING AND MATERIALS (ASTM)

ASTM D2487	–	Standard Practice for Classification of Soils for Engineering Purposes (Unified Soil Classification System)

(Copies of these publications are available online at https://www.astm.org/.)

ASSOCIATION OF AMERICAN RAILROADS (AAR)

General Rules Governing the Loading of Commodities on Open-Top Cars

(Copies of this publication are available online at https://aarpublications.com.)

INTERNATIONAL ORGANIZATION FOR STANDARDS (ISO)

ISO 3411	–	Earth-Moving Machinery – Physical Dimensions of Operators and Minimum Operator Space Envelope
ISO 3499	–	Earth-Moving Machinery – Falling-Object Protective Structures – Laboratory Tests and Performance Requirements
ISO 5010	–	Earth-Moving Machinery – Wheeled Machines – Steering Requirements
ISO 6015	–	Earth-Moving Machinery Hydraulic Excavators and Backhoe Loaders Methods of Determining Tool Forces
ISO 6682	–	Earth-Moving Machinery – Zones of Comfort and Reach for Controls
ISO 7451	–	Earthmoving Machinery – Volumetric Rating for Hoe-Type and Grab-Type Buckets of Hydraulic Excavators and Backhoe Loaders
ISO 7464	–	Earth-Moving Machinery – Method of Test for the Measurement of Drawbar Pull
ISO 14397-1	–	Earth-Moving Machinery – Loaders and Backhoe Loaders – Part 1: Calculation of Rated Operating Capacity and Test Methos for Verifying Calculated Tipping Load

(Copies of this document are available online at https://www.iso.org/.)

NATIONAL ELECTRICAL MANUFACTURERS ASSOCIATION (NEMA)

NEMA Z535.2 – Environmental and Facility Safety Signs

(Copies of this document are available online at https://www.nema.org/.)

SOCIETY OF AUTOMOTIVE ENGINEERS (SAE)

SAE J31	–	Hydraulic Backhoe Lift Capacity
SAE J115	–	Safety Labels of Off-Road Machines
SAE J163	–	Low Tension Wiring and Cable Terminals and Splice Clips
SAE J185	–	Access Systems for Off-Road Machines
SAE J198	–	Windshield Wiper Systems, Trucks, Buses, and Multipurpose Vehicles
SAE J318	–	Automotive Air Brake Line Couplers (Gladhands), Recommended Practice
SAE J336	–	Truck Cab Interior, Sound Level for
SAE J381	–	Windshield Defrosting Systems Test Procedure and Performance Requirements - Trucks, Buses, and Multipurpose Vehicles
SAE J386	–	Operator Restraint System for Off-Road Work Machines
SAE J514_202411	–	Hydraulic Tube Fittings
SAE J516	–	Hydraulic Hose Fittings
SAE J517	–	Hydraulic Hose
SAE J518/2_202312	–	Hydraulic Flanged Tube, Pipe, and Hose Connections, Four-Screw Flange Connection
SAE J524	–	Seamless Low-Carbon Steel Tubing Annealed for Bending and Flaring
SAE J525	–	Welded and Cold Drawn Low-Carbon Steel Tubing Annealed for Bending and Flaring
SAE J534	–	Lubrication Fittings
SAE J553	–	Circuit Breakers
SAE J680	–	Location and Operation of Air Brake Controls in Motor Truck Cabs
SAE J695	–	Turning Ability and Off Tracking – Motor Vehicles
SAE J917	–	Marine Push/Pull Control Cables
SAE J925_199306	–	Minimum Service Access Dimensions for Off-Road Machines
SAE J985	–	Mirror, Design, Rear View, Vision Factors, Considerations In
SAE J994	–	Alarm – Backup – Electric Laboratory Performance Testing
SAE J1013_200711	–	Measurement of Whole Body Vibration of the Seated Operator of Off-Highway Work Machines
SAE J1040_200305	–	Performance Criteria for Rollover Protective

		Structures (ROPS) for Construction, Earthmoving, Forestry and Mining Machines
SAE J1069	–	Oil Change System for Quick Service of Off-Road Self-Propelled Work Machines
SAE J1074	–	Engine Sound Level Measurement Procedure
SAE J1127	–	Battery Cable
SAE J1128	–	Low Tension Primary Cable
SAE J1166	–	Sound Measurement-Off-Road Self-Propelled Work Machines- Operator-Work Cycle
SAE J1176	–	External Leakage Classifications for Hydraulic Systems, Recommended Practice
SAE J1284	–	Blade Type Electrical Fuses
SAE J1308	–	Fan Guard for Off-Road Machines
SAE J1453/1_201906	–	Specification for O-Ring Face Seal Connectors: Part 1 – Tube Connection Details and Common
SAE J1503	–	Performance Test for Air-Conditioned, Heated, and Ventilated Off-Road, Self-Propelled Work Machines
SAE J1587	–	Joint SAE/TMC Electronic Data Interchange Between Microcomputer Systems in Heavy-Duty Vehicle Applications
SAE J1614	–	Cooling System Metallic Caps and Filler Necks
SAE J1708	–	Serial Data Communications between Microcomputer Systems in Heavy-Duty Vehicle Applications, Recommended Practice
SAE J1939	–	Recommended Practice for a Serial Control and Communications Vehicle Network
SAE J1939/13	–	Off-Board Diagnostic Connector
SAE J2077	–	Miniature Blade Type Electrical Fuses
SAE J2360	–	Lubricating Oil, Gear Multipurpose (Metric)
SAE AMS-STD-595	–	Colors, Used in Government Procurement

(Copies of these documents are available online at https://www.sae.org/.)

TIRE AND RIM ASSOCIATION, INC (TRA)

Tire and Rim Association (T&RA) Standards Manual

(Copies of this document is available online at https://www.us-tra.org/.)

2.4 Order of precedence. Unless otherwise noted herein or in the contract, in the event of a conflict between the text of this document and the references cited herein, the text of this

document takes precedence. Nothing in this document, however, supersedes applicable laws and regulations unless a specific exemption has been obtained.

3. REQUIREMENTS.

3.1 First article. When specified (see 6.2), a sample shall be subjected to first article inspection in accordance with 4.2.

3.2 Physical characteristics. The standard issue Type IV tractor shall consist of a tractor equipped with a front loader attachment (see 3.2.4.1); a rear mounted backhoe (see 3.2.4.2.1); portable tools, as specified (see 3.2.4.3); and when specified, provisions for a radio set (see 3.2.3.6.3). The standard issue Type II tractor shall consist of a tractor equipped with a front loader attachment (see 3.2.4.1); a rear mounted backhoe (see 3.2.4.2.1); and portable auxiliary tools, as specified (see 3.2.4.3). The tractor shall include electronic over hydraulic (EOH) controls. The EOH controls, at a minimum, the loader, excavator, auxiliary hydraulic, and stabilizer system. Alternative configurations may be required, per the provisions of 3.2.4 as specified in the acquisition requirements (see 6.2). The term “tractor”, used throughout this document, applies to either Type II or IV, or both, as applicable to the contract or purchase order.

3.2.1 Materials. Materials shall be of sufficient durability to meet all performance requirements, in any of the environments, specified herein.

3.2.1.1 Prohibited materials. The system shall not have prohibited materials (including alloys containing prohibited materials) present in or on any delivered systems or support equipment, required for operation and sustainment of the system, or used in final manufacture and assembly processes. (T=O). Prohibited materials are described in 3.2.1.1.1.

3.2.1.1.1 List of prohibited materials and exceptions. The following are prohibited materials: asbestos, beryllium, Class I and Class II Ozone Depleting Substances (ODS), hydrofluorocarbons (HFCs), hexavalent chromium, cadmium, mercury, lead, radioactive materials, other Group 1 Agents classified as "carcinogenic to humans" by the International Agency for Research on Cancer (IARC) Monographs, and per and poly fluoroalkyl compound (PFAS)-containing Aqueous Film Forming Foam (AFFF).

The following exceptions are allowed without prior approval from the Government:

- Cadmium and hexavalent chromium on electrical connectors and back shells used to mate with cadmium electrical connectors on Government Furnished Equipment (GFE) or used in an Automatic Fire Extinguishing System (AFES).
- Products listed under "Priming" and "Topcoating" in MIL-DTL-53072, Table I
- Lead-acid batteries
- Lead solder
- Leaded battery terminal adaptors/clamps
- Silica used in adhesives and sealants
- Fuels specified for use in the requirements of this contract
- Steel containing up to 0.35 % lead by weight

- Aluminum containing up to 0.4 % lead by weight
- Copper and Brass alloys containing up to 4 % lead by weight
- Beryllium and Beryllium alloys used in electrical components
- Mercury containing components compliant with European Union (EU) Directive 2011/65/EU (RoHS 2)
- Trace amounts of identified prohibited materials contained in base materials and/or alloys. For the purposes of this contract trace amounts are defined as <0.1% by weight for carcinogens and <1% by weight for all other materials
- HFCs in fire extinguishing systems in crew-occupied spaces
- R134a in ground vehicle air conditioning systems

3.2.1.2 Recycled, recovered, or environmentally preferable materials. Recycled, recovered (see 6.8.1), or environmentally preferable materials should be used to the maximum extent possible provided that the material meets or exceeds the operational and maintenance requirements and promotes economically advantageous life-cycle costs. Used, rebuilt, or remanufactured parts, pieces, and components shall not be incorporated into the tractor.

3.2.1.3 Dissimilar metals. The system shall not use dissimilar metals (see 6.8.2) in intimate contact with each other unless protected per MIL-STD-889.

3.2.1.4 Deterioration prevention and control. The tractor shall be fabricated from compatible materials, inherently corrosion resistant, or treated to provide protection against the various forms of corrosion and deterioration to which they are susceptible.

3.2.1.5 Finish. All external surfaces of the tractor are suitable for painting, except those that reach a temperature of 400°F, shall have a chemical agent resistant coating (CARC) topcoat in accordance with (IAW) MIL-DTL-64159 and be cleaned, pretreated, and primed IAW MIL-DTL-53072 and TACOM drawing number 19207-12585018 REV B, Paint System for Exterior and Interior Army Materiel. Those that reach 400°F during operation shall be coated with a high temperature resistant paint of limited reflectivity. As specified in the production order (see 6.2), the color shall be green, color no. 34094 of SAE-AMS-STD-595 or tan, color no. 33446 of SAE-AMS-STD-595. Surfaces not suitable for painting shall be treated to or inherently provide a surface of limited reflectivity, as shall interior components visible from the exterior. Other internal components may be finished with the manufacturer's standard colors and paint, plating, or treatment. Fabrics, plastic, rubber hoses, glass, and machined surfaces are not to be CARC-treated, unless otherwise specified. Further, CARC is not to be applied where it interferes with component functions such as surfaces requiring electrical contact, heat transmission, or tight tolerances.

3.2.1.5.1 Camouflage. When specified (see 6.2), the tractor shall be finished in a Government furnished camouflage pattern (see 6.5).

3.2.2 Configuration. The fully equipped tractor as defined in 3.2 shall be self-deployable and capable of equal utility, at rated capacities, both on and off road. Powertrain components shall be compatible with and properly matched to all driven mechanisms simultaneously, attachments included. The tractor shall have attachment mounting provisions that permit

installation and removal of attachments without requiring disassembly of any other component. The vehicle structure shall be capable of withstanding the strain, vibration, and other detrimental effects incident to off road travel and the utilization of attachments and tools, and conform to the requirements of 3.4. Whereas this specification cites only inch-pound units, products made to metric equivalents are acceptable (see 6.7).

3.2.3 Components. Tractors shall have a common vehicle design between types, utilizing interchangeable (see 6.8.3) components as far as practicable. Instruments, controls, and interfaces for attachments and tools shall be identified as to their function by means of indelible symbols, and levers and buttons shall be color-coded. The EOH steering system shall be furnished, with a full or partial circle, steering wheel. If hydraulic steering is supplied, it shall be serviced by a separate hydraulic system or have a priority circuit. Secondary steering in accordance with ISO 5010 shall be provided in the event of engine failure at any speed. Any push/pull cable not completely housed within a component shall be a waterproof, heat resistant, anti-friction type, conforming to requirements for marine cables in SAE J917. Fuel, air, and hydraulic lines and fittings shall be clean, free from leaks, and secured to preclude chafing on adjacent lines or components. Fuel, air, and hydraulic lines shall be readily distinguishable and not have common or interchangeable couplings. All securing pins (hitch pins, lynch pins, etc) shall be tethered to the vehicle or major component; unless the location of the tether makes it susceptible to failure during normal operation.

3.2.3.1 Engine. The tractor shall be supplied with a liquid or air-cooled diesel engine, capable of the performance specified herein while operating with diesel fuel oil and aviation, kerosene type turbine fuel, grade JP-8 in accordance with MIL-DTL-83133, and F-24 in accordance with NATO STANAG-3747. The engine oil filter location shall be labeled, specifying filter type, and placed near the point of filter installation. The engine supplied with the production vehicle shall be compliant with the EPA emissions standards for nonroad diesel engines.

3.2.3.1.1 Cooling system. The cooling system shall provide adequate cooling to the engine, in any of the environments specified herein, operating at 85 percent of the rated horsepower. If the engine is air-cooled, the thermal conditions of the engine shall be monitored by a cylinder head temperature gauge that provides a constant readout at the operator's position. If the system is also used to maintain the temperature of the transmission, it shall do so without degradation of cooling to the engine, as described. If water-cooled, the thermal conditions of the engine shall be monitored by a coolant temperature gauge that provides a constant readout at the operator's position. Initial fill of the cooling system shall be a mixture of 50 percent water and 50 percent antifreeze conforming to A-A-52624. If the cooling system fan is provided with a thermostatic control, in the event of its failure, the fan shall continue to operate while the engine does. Fan guard shall be in accordance with SAE J1308.

3.2.3.1.2 Lubricating Oil(s). All parts and components shall be compatible with specified military lubricants. The engine, transmission, and hydraulic systems shall operate on oils referenced in MIL-PRF-2104 and MIL-PRF-32626 if required according to prevailing ambient temperature. Initial lubrication and all subsequent lubrication shall be compatible with military lubricant referenced in MIL-PRF-2104. Gear lubricating oil shall conform to SAE J2360.

3.2.3.1.3 Engine air induction system. The air induction system shall not require disassembly for normal vehicle maintenance or element servicing. The air ducts and any portion of the system affected by the fording requirement (see 3.3.2.2) shall withstand or be sealed against water entry. The air cleaner shall be a dry type, with a safety element and an inertial type pre-cleaner, in accordance with MIL-PRF-62048; located so that removal for transportation is not required. An airflow restriction indicator, visible from the operator's position, shall be provided.

3.2.3.1.4 Oil sampling valves. Oil sampling valves meeting the performance requirements of MIL-DTL-81940 shall be provided on the engine; for hydraulic systems with capacities greater than 5 gallons; and transmission, if applicable. Valves shall be located so that a true representation of oil is obtained; but personnel taking samples, with the engine running, are not exposed to danger. Sampling valves shall be labeled "engine", "hydraulic", or "transmission", as appropriate. To maximize data density, valves shall be located in return lines, in areas of turbulent flow, and prior to filters.

3.2.3.1.5 Fuel system. The fuel system shall conform to FMCSR 393.65 and 393.67, and include a fuel strainer/filter; a water separator, with provisions for draining sediment; and a self-priming, fuel injection pump. The strainer/filter shall be located between the fuel tank and transfer pump and shall be readily accessible for inspection and replacement.

3.2.3.1.5.1 Fuel tanks. The tractor shall be provided with fuel tank(s), protected from damage, of a capacity that will permit 10 hours of continuous operation with any of the specified attachments (see 3.2.4). Each fuel tank shall be supplied with a drain plug, at its lowest point, removable with common hand tools and without requiring removal of any other tractor component. Manual shut-off valve(s) shall be furnished at the tank(s), on the fuel supply line before the fuel filter(s); labeled "FUEL SHUT-OFF", with double ended arrows indicating the direction of operation and the functional result (i.e. open, closed). Readily discernable at or on the fuel fill port, or its cap, "Diesel Fuel" shall be indelibly marked in letters not less than 1-inch high. The fuel fill port(s) shall be provided with removable strainers, and shall be able to receive fuel from a refueling nozzle with a 2-inch O.D. spout with sufficient air release clearance for a flow rate of not less than 20 gallons per minute. The filler shall be located to accept fuel from a 5-gallon can conforming to A-A-59592, by a person on the ground or a surface provided on the tractor for standing. Fill port(s) shall be supplied with captivated safety filler cap(s) made to preclude mud build-up and intrusion into the tank. A sealed cap and vent shall be furnished if the port is below fording depth (see 3.3.2.2). The fuel system design shall be such that fuel spilled during refueling will not contact any part of the exhaust or electrical system.

3.2.3.1.6 Exhaust system. The exhaust system shall be leak-proof and the point of exhaust shall be located so as not to create a toxic or nausea hazard to the operator or personnel performing maintenance tasks with the engine operating. The system shall also provide protection against burn hazards to personnel. The exhaust pipe(s) shall be configured or equipped to prevent entry of precipitation or shall provide for drainage of precipitation without damage to the muffler; and for naturally aspirated engines, furnished with a spark-arresting muffler, located away from the fuel system and any other flammable components.

3.2.3.2 Transmission. The vehicle shall be equipped with an automatic/powershift transmission and meet requirement 102.1 of MIL-STD-1180. The automatic/powershift transmissions shall have a downshift inhibitor and an override to preclude inadvertent reversal of tractor direction. The transmission shall be capable of withstanding stall operation for a minimum of 30 seconds without damage, permanent deformation, or exceeding a fluid temperature limit of 250°F. A neutral start switch and filter(s) with replaceable elements shall be provided.

3.2.3.3 Hydraulic system. The tractor shall be equipped with a hydraulic system to operate front attachments (see 3.2.4.1), rear attachments (see 3.2.4.2), and portable auxiliary tools (see 3.2.4.3). The system shall provide for simultaneous operation of the rear attachment and any auxiliary tool without degradation. Circuits and components of the system shall be compatible with and operate on fluids conforming to MIL-PRF-2104 and MIL-PRF-32626, if required according to prevailing ambient temperature. The system shall restrict the operating temperature of the hydraulic system fluid to not greater than 220°F.

3.2.3.3.1 Hydraulic reservoir. The reservoir shall have a filler neck with a positively retained strainer that permits a gravity fill rate of not less than 10 gallons per minute, using oil at a temperature of 70°F (± 5°F). The filler shall be located to allow for filling from a standard 5-gallon container. A tethered filler cap, and breathers equipped with filters shall be provided. If the reservoir is sealed, the cap or neck shall provide for equalization of pressure, to facilitate opening. A means to check the oil level shall be provided, with "Full" and "Add" indicators, for both hot and cold conditions. The fill port shall be labeled "HYDRAULIC FILL" in letters not less than 1-inch high.

3.2.3.3.2 Hydraulic oil filter. The system shall be provided with a replaceable filter, located to be easily changed without requiring draining the reservoir or removal of components other than the cap and labeled specifying filter type. The housing shall be equipped with a pressure relief by-pass to prevent filter collapse. A clearly visible indicator shall be provided to show when the filter requires changing.

3.2.3.3.3 Hydraulic lines. Hoses shall be routed to provide support, ease of maintenance, minimum bends, and maximum protection; and provisions made to preclude damage due to chafing and stress. Hose in assemblies, except suction lines, shall conform to the requirements of SAE J517 type 100R1, 100R2, and 100R10. Suction line hose shall conform to SAE J517, 100R4. Hoses shall be rated not less than the relief valve pressure of the circuit to which it is applied. Minimum bend radii of hoses shall not be less than that specified in SAE J517. Tubing shall be in accordance with SAE J524, SAE J525, having a burst pressure rated not less than 3 times the relief valve pressure of the circuit.

3.2.3.3.4 Ports, fittings, and connections. All hydraulic ports, fittings, and connections shall conform to SAE J514_202411, J516, J518_202312 and J1453/1_201906 as applicable. Pressure tube fittings shall have a minimum burst pressure 3 times the operating pressure.

3.2.3.3.5 Couplings. Quick disconnect, dry-break couplings that seal both ends of lines shall be used on all hydraulic lines where separation is required for attachments. The couplings

shall seal the lines without leakage for 50 connections and disconnections; the loss of fluid on disconnecting thereafter shall not exceed 1/2 fluid ounce. Coupling halves shall be permanently identified and be provided with captivated covers. The covers of the mating coupling halves shall fit together when the coupling is engaged. If hydraulic return and supply line coupling halves can be connected, when attachments are removed, captivated covers are not required. Flush face, quick disconnect couplings shall be furnished on all hydraulic lines for auxiliary tools and associated equipment.

3.2.3.3.6 Engine emissions.

3.2.3.3.6.1 Pollution controls. The system engine(s) shall not use pollution control technologies that are affected by the sulfur level of the specified fuels during operation, maintenance, or sustainment (T=O).

3.2.3.3.6.2 Utilize engine technology. The system engine(s) should be of the newest design(s) and incorporate the engine technology(ies) that meet all performance requirements specified in this specification while operating on the specified fuels.

3.2.3.3.6.3 Technology compliance level. The system engine(s) shall be compliant with EPA "aa" emission standards (T=O).

3.2.3.3.6.4 Emissions exemption labeling. The system engine(s) shall meet National Security Exemption labeling requirements IAW EPA regulations per 40 CFR 1068.225, with a label on the engine that is visible after the engine is installed (T=O).

3.2.3.4 Electrical system. A 24-volt electrical system shall be furnished in accordance with FMCSR 393.27 through 393.33. The alternator shall provide sufficient amperage to operate all electrical components of the tractor simultaneously, to include lighting, and power to the radio, as well as charge the battery. The system shall incorporate reverse polarity protection and means to prevent starter engagement when the engine is running. Each electrical circuit shall be protected by a circuit breaker or fuse in accordance with SAE J553, SAE J1284 or SAE J2077, with labels indicating the function served by the circuit. Spare fuses, in each amperage rating used on the vehicle, shall be present and located on the fuse panel. A wiring harness and connector shall be furnished, to mate the tractor with the electrical system on a towed vehicle. The connector shall mate with military connectors in accordance with MS75020; be furnished with a spring-loaded cover; and labeled "TRAILER CONNECTOR" in letters not less than 1.00 inches high. All connectors and switches shall be protected from adverse effects of the elements.

3.2.3.4.1 Slaving components. The tractor shall be equipped with a 24-volt slave receptacle that shall mate with connectors conforming to AEP-4074. The receptacle shall permit charging of the batteries and slave starting of the engine from an external power source; and provide a power source for charging and slaving other equipment. The slave receptacle shall be installed on the exterior of the tractor near the battery enclosure, accessible to personnel standing on the ground. The slave receptacle shall be labeled "SLAVE, 24 VOLTS" in letters 1-inch high.

3.2.3.4.2 Lighting. All tractor lights, reflectors, and wiring shall be in accordance with requirement 108.1 of MIL-STD-1180, except that a rectangular 24-Volt headlight with replaceable bulb shall be acceptable. Lights and reflectors shall not be mounted on vehicle bumpers; and lights shall be mounted in a protected location. The tractor shall be equipped with turn signals and emergency flashers. Emergency flashers, when activated, shall be overridden by the brake lights when the brakes are applied. All lights shall be controlled from the operator's compartment. In addition to individual controls, the tractor shall be equipped with a master switch to control service lights, lights, and instrument panel lights. For headlight application, use of non-DOT approved 24-Volt bulbs is acceptable.

3.2.3.4.3 Blackout lights. The tractor shall be equipped with the following:

a. One left front light conforming to MS51318 or LED equivalent.
b. Two front marker lights conforming to MS52126 or LED equivalent.
c. Two rear stop/taillights conforming to MIL-DTL-32361 or LED equivalent.

The blackout headlight shall be mounted on the left top of cab adjacent to the work light of the plan outline of the tractor, positioned to provide illumination with the front attachments in the travel position. The blackout front marker lights shall be mounted on the front of the tractor, as far apart as practical, one each side of the vertical centerline at the same level. The blackout taillights shall be mounted in a protected location, recessed not less than 1/2 inch into hole or behind the guard. Blackout lights shall be operated by an interior switch conforming to MIL-PRF-11021. All interior and external lights, the horn, and the backup alarm shall be made inoperable when blackout lights are used except for warning lights, such as temperature and oil lights, which shall remain operative in the blackout mode.

3.2.3.4.4 Interior lighting. The tractor shall be equipped with instrument lighting and indicators, readily discernable to the full range of personnel (see 3.6.5). Intensity of instrument and gauge lighting shall be adjustable. Interior lights, gauges and instruments that remain in operation when blackout lighting is selected, to include warning lights, shall not emit energy outside of the 380-700 nanometer wavelength range. Interior lights, gauges and instruments that remain in operation when blackout lighting is selected, to include warning lights, shall be designed for use during blackout operations. They shall not create a light source that will degrade operations with night vision goggles to include temporarily bloom, wash out, or create large halo effects.

3.2.3.4.5 Implement floodlights. Two forward mounted, universally adjustable, floodlights shall be provided, shock mounted forward of the operator's compartment/cab, to illuminate the front attachment and the work plane in front of and on both sides of the tractor. Two backward mounted, universally adjustable, floodlights shall be provided, shock mounted to the rear of the operator's compartment/cab, to illuminate the rear attachment and the work plane behind and on both sides of the tractor. Each fixture shall have a weatherproofed housing and a heat-resistant lens with a weather-resistant seal, housing the lamp. Each floodlight shall have a lateral and vertical beam spread of 45°, minimum. Average life shall be rated at 1,000 hours. Infrared lights or floodlights with integrated infrared lights are desired for blackout night

operations to aid operators wearing night vision goggles. Infrared lights shall be capable to conform with combat arms tactical light discipline.

3.2.3.4.6 Wiring. Weatherproof wire and connector assemblies shall be in accordance with SAE J1128/J163. Wiring, to include numbering, shall be in accordance with SAE J1614; and routed in a protected location.

3.2.3.4.7 Battery. The battery(s) shall be of sufficient size to start tractor at all environmental conditions specified herein. A switch shall be furnished to disconnect all electrical power to the tractor. The switch shall be installed in an inconspicuous location inside the cab as near to the battery ground connection as practical; and labeled for identification and designation of the on and off positions. Battery cables conforming to SAE J1127 shall be furnished with insulated terminal covers. Positive and negative cable terminals shall be identified with a red sleeve, labeled "+" and a black sleeve, labeled "-", respectively.

3.2.3.4.7.1 Battery mounting. The battery shall be mounted above fording depth (see 3.3.2.2) and be accessible for removal and service without requiring removal of components other than a cover, if one is provided. Battery mounting shall not interfere with access to components; shall support the entire battery base; and be positioned so that the electrolyte level is discernable without removing the battery. Battery restraining clamps shall be provided to hold the battery in a fixed position. The battery compartment shall have provisions for drainage and venting, and shall be protected against corrosion and short-circuiting. The battery compartment shall be sized to fit Military 6TMF batteries per ATPD 2206.

3.2.3.4.8 Diagnostics. The tractor shall have diagnostics IAW 3.2.3.4.8.1 and 3.2.3.4.8.2. In addition, when practical, the Type IV shall have the diagnostic ability to identify major system LRU failures (e.g. check engine lights, blinking / flashing lights etc.). The tractor must be compatible with current U. S. Army Standard Unit Level Test Equipment which is presently WATS (Wireless At-Platform Test Set) with the auxiliary WATS (Wireless At-Platform Test Set). Vehicle diagnostic connectors and circuits must be compatible with current standard Army test equipment. Vehicle diagnostic connectors shall be easily accessible, hard mounted and environmentally protected. The diagnostic connectors shall be equipped with a cover, which shall prevent entrance of moisture and contaminants.

3.2.3.4.8.1 Electronic. The vehicle shall feature either a single data bus network as specified by SAE J1939, J1708, or a multiple data bus network in accordance with J1939, which defines the interface between J1708 and J1939. The vehicle's data bus shall have built-in sensors that provide fault isolation capability sufficient to identify failures of major components of each system monitored by the data bus. Diagnostic outputs shall be transmitted to the vehicle mounted J1939 female 9 pin Deutsch Connector, which shall conform to SAE J1939-13 'Off-board Diagnostic Connector' dated July 1999, using a format conforming to SAE J1587.

3.2.3.4.8.2 Analog. For all systems for which only analog diagnostic capability exists, the tractor shall have installed a vehicle Diagnostic Connector Assembly (DCA) harness and related transducers that will allow testing a vehicle without disassembly IAW the Design Guide for

Vehicle Diagnostic Connector Assemblies (DCA) Report No. CR-82-588-003 Rev 1, Feb 1988. However, this provision shall be waived in the case that all the following requirements are met:

a. All systems for which only analog diagnostic capability exists can be interrogated by transducers available in the Transducer Kit (TK) of the WATS (Wireless At-Platform Test Set), or otherwise readily available in the maintenance inventory and compatible with the WATS.
b. All such systems incorporate test connections that are physically compatible with those transducers.
c. All test connections are readily accessible, and transducers can be installed without disassembly of the vehicle.

3.2.3.5 Chassis. The chassis and related subsystems shall be of sufficient durability, strength, and torsional flexibility to withstand the stresses imposed in any of the operations intended to be performed by the tractor; and by its deployment on- and off-road. The tractor shall be fitted with a stabilizing subsystem (outriggers, etc.), as necessary, to permit safe operation.

3.2.3.5.1 Axles. All axles shall be powered. Where required by traction design (see 3.2.3.5.2), an inter-axle differential shall be provided, equipped with a lock-up device with automatic disengagement above 10 miles per hour (mph). As far as feasible, differentials, axles and other components shall be interchangeable, front to rear, with wheel offset the same on all axles to allow interchangeability of wheel assemblies. All axles shall be properly vented and equipped with lubricated wheel bearings and seals adequate to meet fording requirement (see 3.3.2.2).

3.2.3.5.2 Torque limiting differentials. An off-road traction control device or positive direct drive to each wheel, with minimum effect to vehicle steering, shall be provided. If a full locking or controllable biasing traction control device is utilized; it shall feature a manual engagement and disengagement control, capable of being implemented without stopping the tractor. A warning light shall be installed and labeled "Differential Locked Out", in a position clearly visible to the operator that shall be illuminated when engaged.

3.2.3.5.3 Suspension. Damping shall be provided at all axles. The tractors shall be equipped with a front suspension lockout for forklift operation, capable of being engaged and disengaged by the operator seated in the cab. A warning light shall be installed and labeled "Front Suspension Locked Out", in a position clearly visible to the operator that shall be illuminated when engaged.

3.2.3.5.4 Wheels and Tires. The tractor shall be equipped with single tire and wheel assemblies on each axle. The rims shall be of a single-piece or bolt-together type construction, and conform to Tire and Rim Association recommendations for the type and size of tire furnished. All tire and wheel assemblies shall be balanced; and be identical. Tires and rims shall meet requirements 119.1 and 120.1 of MIL-STD-1180. The tractor shall be equipped with multi-purpose, all traction non-directional tread, tubeless, radial tires, with ratings conforming to Tire and Rim Association (T&RA) Standards Manual recommendations for the type and size of tire. Tires shall be equipped with adequate valve extensions, with valve caps, mounted to permit

checking tire inflation using only the onboard pressure gauge (see 3.2.3.9). Ballast or hydro-inflation of tires is not permissible, but a run-flat feature is required. A multi-piece run-flat feature repairable at the field level is desired. A spare tire and wheel assembly identical to those provided on the axles shall be furnished, mounted on a spare tire carrier installed in a readily accessible location. A Central Tire Inflation System is desired.

3.2.3.5.5 Service brakes. The tractor shall be equipped with a complete, dual brake system in accordance with requirements 105.1 or 121.1 of MIL-STD-1180. Brake hoses shall meet requirement 106.1 of MIL-STD-1180. A fully active 4-wheel anti-lock brake system (ABS) shall be provided to regulate braking power. A hydraulic brake system shall allow use of brake fluid compatible with MIL-PRF-46176 and meet the requirements specified in 3.3.2.5. When disc brakes are furnished, a disc pad wear indicator system shall be provided. A complete trailer brake control system shall be furnished that includes, but is not limited to, the following:

a. Independent control for trailer brakes; and coincident control with tractor pedal.
b. Trailer stoplight operative with foot control and with control for trailer brakes.
c. An interconnection to mate with the electrical system on the towed trailer (see 3.2.3.4).
d. An interconnection for service to the trailer brakes.
e. Controls located convenient to operator arranged for right hand operation (see 3.2.3.6).
f. Identification of emergency and service lines, and connectors.

3.2.3.5.5.1 Air system. When an air service brake system is provided, the following shall be required. Storage reservoir tanks capacity shall conform to requirement 121.1 of MIL-STD-1180. The tank shall be equipped with a check valve, safety valve, and a drain valve that is readily accessible. Air control valves, relay emergency valve or other system giving equivalent functionality, and an air pressure gauge with a low air pressure warning light and buzzer shall be installed. An evaporator or air dryer, and air brake service and emergency line couplings conforming to SAE J318 shall be provided.

3.2.3.5.6 Parking brake. A parking brake system shall be furnished that shall conform to requirement 105.1 or 121.1 of MIL-STD-1180; except that it shall hold on a 40 percent grade, pointing either up or down hill. The force required by the operator to apply parking brakes as described above shall not be greater than 24 pounds for hand actuated parking brakes, and 57 pounds for foot actuated parking brakes.

3.2.3.5.7 Hydraulic damper with gas spring. A commercially available, oil hydraulic damper shall be furnished to influence the nature of movement and vibration through the opening and closing of the armored door. The contractor shall certify that the product offered meets the characteristics of this description and that the product conforms to the producer's own drawings, specifications, standards, and quality assurance practices and is the same product offered for sale in the commercial marketplace. The damper shall not have rust, fins, burrs, or other imperfections which may affect appearance, usability, or durability, and must have following characteristics:

a) Extension Force (static, at 10 mm from full extension): 320 +/- 20 N
b) Compression Force (static, at 5 mm from full compression): 500 N max

c) Dynamic Friction: 45 N max
d) Permissible Operating Temperature Range: -22°F to 176°F
e) Compressed Length: 322.5 mm max
f) Extended length: 586 +/- 2 mm
g) Dynamic damping in both directions of movement, commencing at 55 mm from full extension and full compression

3.2.3.6 Operator cab. The tractor shall be equipped with a 2-person, weatherproofed, insulated, rigid cab; equipped with windshields, fore and aft, and opening doors with transparent, vertical or horizontal roll up or sliding windows on each side. Glazing, in accordance with requirement 205.1 of MIL-STD-1180, shall be provided for the windshields. SAE J985 may be consulted for information and guidance on visual considerations. Door locks and retainers shall be in accordance with requirement 206.1 of MIL-STD-1180. The cab shall have means to provide ventilation to the occupants with the windows closed. The compartment shall be furnished with upholstered seats, with the driver's seat being individually adjustable, fore and aft and up and down, both armrest and backrest, and located to provide maximum unobstructed visibility for the operator. The range of adjustments shall be sufficient to accommodate the full range of military personnel (see 3.6.5). Seating systems, seatbelts, and seatbelt assemblies and anchorages provided for the personnel while the vehicle is in motion shall be in accordance with requirements 207.1, 208.1, 209.1 and 210.1 of MIL-STD-1180. However, if a separate seat belt is provided when the operator is seated in the excavating position, that seatbelt may be in accordance with SAE J386. Seatbelts shall be accessible to the occupants at all times, unless purposely stored. Seatbelts shall be fully retractable with provisions for off floor storage and shall not automatically lock out when the vehicle is on extreme slopes so as to preclude the operator/passengers from dismounting and re-entering the vehicle. Compartment design shall conform to 3.6.5.2 and 3.6.5.4. and requirement 302.1 of MIL-STD-1180.

3.2.3.6.1 Gauges and instruments. Compartment design shall conform to 3.6.5, and controls shall be arranged in compliance with SAE J680, identified according to function and meet requirement 101.1 of MIL-STD-1180. The tractor shall be equipped with the following instruments and gauges, at a minimum, readily visible to the full range of military personnel, seated in the driver's seat:

a. Voltmeter or ammeter.
b. Fuel gauge.
c. Engine oil pressure gauge.
d. An engine oil low-pressure red indicator light or audible alarm.
e. Engine coolant temperature (water-cooled) or cylinder head temperature gauge (air-cooled).
f. An engine high-temperature red indicator light or audible alarm
g. Torque converter or hydrostatic transmission temperature gauge.
h. A transmission high-temperature red indicator light or audible alarm.
i. Air pressure gauge with an audible alarm to indicate low air pressure.
j. Speedometer with odometer.
k. Engine tachometer.
l. Hour meter (a minimum of 9999 hours).

m. Illuminated inclinometer; indicating percent of the slope (5 percent increments, max, to a minimum of a 40 percent slope, left and right of center).
n. A decal indicating the slope limitation of the tractor (adjacent to the inclinometer).
Means shall be provided to check the operation of all (visible and audible) alarms. The oil low pressure indicator or audible alarm may be common to that for the engine high temperature. Other instrumentation, as required by attachments (see 3.2.4), shall also be incorporated.

3.2.3.6.2 Cab accessories. The tractor shall be equipped with the following accessories minimum:

a. Exterior rearview mirrors on both sides of the cab, adjustable a minimum of 45 degrees horizontally and vertically. A minimum of 50 square inches of reflective surface shall be provided by each mirror, with an additional convex mirror of not less than 25 square inches inset or separate. The mirrors shall meet requirement 111.1 of MIL-STD-1180, with shock dampening mounts and shall collapse against the cab upon impact.
b. Multi-speed, front windshield wiping and washing system conforming to SAE J198 and requirement 104.1 of MIL-STD-1180.
c. A compartment air conditioner and heater in accordance with SAE J1503, with defroster system and blower, operable independent of the heater allowing fresh air to be circulated in the cab. The air conditioner, heater and defroster shall meet requirement 103.1 of MIL-STD-1180, in the specified operating environments (see 3.5).
d. Adjustable visors for both driver and passenger.

3.2.3.6.3 Radio mounting provisions. The tractors shall have sufficient vacant area and shall provide adjacent electrical power and ground capability to mount a SINCGARS radio and MFoCS II system within the cab. Provisions shall also be made for external mounting of its antenna and routing of wiring to the radio. The radio shall be mounted to enable either the operator or the passenger to operate the radio and comply with survivability (see 3.6.3) and human engineering (see 3.6.5) guidelines. The Government will loan (see 3.4.4) a radio set to the contractor, to devise and prove his configuration.

3.2.3.6.4 Rifle mounting provisions. The tractor shall be equipped with one or more rifle mounting brackets capable of securing two M4/M4A1 carbines, within reach of the occupants. Rifle mounting brackets shall be compatible with standard issue rifle optics: M68 Close Combat Optic (CCO) and M150 Rifle Combat Optic (RCO). The bracket design documented on drawing number 13229E8014 or 13229E8016 may be used as reference. Whether this or an original design is used, its placement (with rifles in place) shall not hamper the operator's movements, or hinder any operation of the tractor.

3.2.3.7 Storage provisions. Stowage space of sufficient size to hold the equipment specified in 3.2.3.9 and the tools specified in 3.2.4.3 shall be furnished on the tractors. Compartment(s) and/or container(s) shall withstand shock and vibration resulting from tractor operation and transport, without deformation or damage to either container or contents. The container(s) shall be integral or securely fastened to the tractor above the fording depth and have provisions for drainage of condensate. Padlocks shall be furnished, and shall be operated by the

same key throughout the vehicle. The container(s) shall be located to permit being loaded and unloaded from the ground. Storage for camouflage netting and personal gear is desired.

3.2.3.8 Towing provisions. A swivel type, towing pintle in accordance with A-A-52550, Type I, class 1, or Type II shall be provided at the rear of the tractor. It shall be mounted, with provisions for the attachment of trailer safety chains. It is desired that the tractor be capable of towing a tractor of the same type.

3.2.3.9 Ancillaries. The contractor shall provide the following items on all production tractors:

a. Tire pressure gauge, suitable for checking tire pressure on the tractor.
b. Lubrication fitting adapter, to a hydraulic coupling, with a 10-inch flexible extension.
c. Hand tools: all required to perform operator/crew level maintenance procedures and connection, in-service adjustment, removal and operator maintenance of the specified attachments (see 3.2.4), and preparation of the vehicle for transportation.

3.2.4 Attachments. The tractor shall be equipped with subordinate attachments, to include tools (see 3.2.4.3), as specified (see 6.2). Attachments shall be compatible with and properly matched to the tractor to meet the requirements specified in 3.3, in any of the environments specified (see 3.5). The tractor shall be equipped with hydraulically operated, stabilizing outriggers, sufficient to overcome the rigors imposed by attachments. Servicing hydraulic lines shall be routed to protect against hazards of the work environment and articulated segments, and a positive locking mechanism to hold the attachment in transport and operating positions shall be provided. Emergency controls shall be as specified in 3.6.5.5.1. The controls for attachments shall be permanently mounted in a manner that ensures safe operation of the attachment and tractor; simultaneously, when required. Controls for each attachment shall be operable only from the designated operating position and shall conform to the requirements of 3.6.5. Adequate lighting that is also controllable from the operator's position (see 3.2.3.4.2) shall be provided at attachment controls. Attachments shall be supplied with all necessary accessories and ancillary provisions (hoses, chains, leads, sheaves, tagline attachments, etc.). As necessary for a particular attachment, counterweights, and provisions for adding; anti-rotation provisions; and hydraulic drives shall be provided. Where applicable, attachments shall be capable of operating in soils of mixed or expansive characteristics to include sand, gravel, clay, silt, and peat; whether organic or not, well or poorly graded, and with water content to 65 percent. ASTM D2487 may be used as a reference for interpretation and classification of soil types.

3.2.4.1 Front attachments. Front attachments shall be provided with a quick-hitch attachment permanently mounted on the tractor, for their installation to and removal from service, and shall utilize a common hydraulic system and controls. The design shall permit attachments to be installed/removed within 30 minutes, by the operator, utilizing only on-board tools. The inherent capabilities of the tractor, like the hydraulic system, may be utilized in the operation. The crane jib with 6,000 lbs. lift capability and 8-ft reach (objective) may be utilized for lifting and loading of material.

3.2.4.1.1 Multi-function bucket. The tractor shall be provided with a bucket for the front loader that serves multiple functions. It shall be capable of transforming from a utility bucket to a (dredging) clamshell, a (dozing) blade, and a landscape leveler. Conversion shall be controlled from the operator's position and locked into mode, with a visual indicator. The bucket shall have a capacity not less than 3/4 cubic yard and performance and stability characteristics shall be as defined in (3.3.3.1 and 3.3.5.1). It is desired that the multi-function bucket has a 1 cubic yard capacity. The clamshell shall be provided with not less than five replaceable bottom teeth; and stops, for correct digging positions of the scoops.

3.2.4.1.2 General Purpose Bucket. When specified, the tractor shall be provided with a front mounted, bucket loader with a replaceable cutting edge shall be provided for separate purchase, having of not less than six replaceable teeth, suitable to construction and excavation tasks (see 3.3.5.1). The loader bucket shall have a capacity not less than 1 cubic yard. It is desired that the loader bucket have a 2.5 cubic yard capacity and have the ability to open to a dozer blade. Loader construction shall preclude spillage of its contents onto the cab, through its full range of operation. The tractor shall be capable of performance specified in 3.3.3.1, at a minimum, with the loader in use.

3.2.4.1.3 Sandbagger. When specified, the tractor shall be supplied with an attachment to the front loader bucket for filling sandbags. The attachment shall comprise a robotic mechanism to automatically fill sandbags from the bucket, at a rate of not less than 6 (six) bags per minute.

3.2.4.1.4 Forklift. When specified, the tractor shall be provided with a front mounted, side shift capable, forklift having folding tines not less than 48-inches in length. The forks shall be adjustable to obtain a fork spread not greater than 10-1/2 inches in closed position, measured from the outside of the forks, and not less than 38 inches in maximum spread position. The forklift shall be suited to loading palletized materiel on and off various transport means (see 3.3.5.2). The Type IV forklift will lift between 4,000 lbs (threshold) and 6,000 lbs (objective) with automatic leveling. Type II will lift a minimum of 2,000 lbs (threshold). The tractor shall be capable of performance specified in 3.3.3.2, at a minimum, with the forklift in use.

3.2.4.1.5 Sweeper. When specified, the tractor shall be provided with a front mounted, rotary sweeper with a clearance path not less than the width of the tractor. The sweeper shall have a self-aligning, transverse, angling capability of not less than 6 degrees, to compensate for surface irregularities. The unit shall be capable of completely sweeping the path, in a single pass, at speeds of up to 25 mph. The tractor shall have a means to suspend the sweeper in the transport mode, to a ground clearance of not less than 10-inches. It shall incorporate a positive locking device to inactivate its mechanics and means to lift the sweeper to its transport position in the event of system failure. The unit functions, to be remotely controlled from the tractor operator's position, shall not compromise control of the tractor under any circumstances, and include a panic stop switch.

3.2.4.1.6 Plow. When specified, the tractor shall be provided with a front mounted, trip edged, snowplow with a clearance path not less than the width of the tractor. The plow shall have a powered, angling capability of not less than 30 degrees, left and right of center; and a self-aligning, transverse, angling capability of not less than 6 degrees, to compensate for surface

irregularities. The attachment shall withstand a force of not less than 2500 pounds distributed evenly across the bottom edge of the moldboard, excluding the trip edges. The unit shall be capable of completely clearing the path, of two foot drifts of snow, in not greater than two passes. The tractor shall have a means to suspend the blade in the transport mode, to a ground clearance of not less than 10- inches. It shall incorporate a positive locking device for the unit in its stowed position, and means to lift the plow to its transport position in the event of system failure. The unit functions, to be remotely controlled from the tractor operator's position, shall not compromise control of the tractor under any circumstances.

3.2.4.1.7 Roto-tiller. When technically feasible, it is desired that the tractor be provided with a front mounted, hydraulic driven, rotary harrowing tiller, not less than the width of the tractor. The tiller shall be supplied with a spray bar (see 3.2.4.1.8), and replaceable, interchangeable tines or upright disks on a retractable rotor that cultivate to a depth of not less than 10 inches. The tiller shall have the capability to rapidly and efficiently mix soil stabilization additives (asphalt cutbacks and emulsions, cement, lime, etc.) to the loosened earth, at speeds up to 5 mph. Rotor speed shall be adjustable independent of the travel speed; and the rotor and its drive train shall be protected against damage in the event that a tine(s) strikes an obstruction. A separate speed indicator in feet-per-minute is desirable; or a readout extrapolating the vehicle's speedometer shall be provided. The tiller shall incorporate a positive locking device for the unit in its stowed position, and means to lift it to its transport position in the event of system failure. The unit functions, to be remotely controlled from the tractor operator's position, shall not compromise control of the tractor under any circumstances.

3.2.4.1.8 Sprayer. When technically feasible, it is desired that the tractor be provided with a liquid dispensing spray bar, not less than the width of the tractor. It is desirable that the spray bar be relocatable, to function with the tiller at the front; and at the rear of the tractor, for dispensing caustic liquids (de-icing agent, pesticides, etc.). The spray bar nozzles shall have a discharge adjustable rate between 40 gallons per minute (gpm) and 150 gpm; and be provided with a quick shutoff mechanism. An additive pump and reservoir, with a capacity of not less than 50 gallons, adequate to service all applications (see also 3.2.4.1.7), shall be provided. The subsystem shall be furnished with a liquid shutoff valve; flow meter; and volumeter, indicating total gallons of liquid being dispensed. The pump inlet and outlet shall be furnished with quick-disconnect fittings, tethered dust cap, and plug. All gauges and controls for the subsystem shall be accessible from the operator's position.

3.2.4.2 Rear attachments. Rear attachments shall be provided as complete integrated units, for their installation and removal from service; and shall utilize a common hydraulic system and controls. The design shall permit attachments to be installed/removed within 30 minutes by the operator utilizing only on-board tools. It is desired that the attachments are capable of being installed/removed within 10 minutes. The inherent capabilities of the tractor, like the hydraulic system, may be utilized in the operation.

3.2.4.2.1 Backhoe. The tractor shall be provided with a backhoe with a general-purpose bucket and hydraulic thumb capable of 360-degree rotation in either direction right or left, having a control console, suitable to construction and excavation tasks (see 3.3.5.3), capable of excavating 27 cubic yards per hour. The bucket shall be a minimum of 24 inches wide, with a

rated capacity as specified in 3.3.5.3, and be equipped with not less than four replaceable teeth. Wherever the teeth of the bucket can make contact with the tractor, a striker plate shall be provided that will adequately protect it from damage. The backhoe shall have a rigid boom construction, and be equipped with hydraulic cushion swing stops effective during last ten degrees of swing. The tractor shall be capable of performance specified in 3.3.3.3 at a minimum, with the backhoe in use. The travel lock for securing the backhoe during travel will permit automatic engaging and disengaging remotely by the machine operator from within the cab of the machine.

3.2.4.2.2 Rock/Ripper Bucket. It is desired that the backhoe be equipped with a heavy-duty rock bucket; or a ripper type bucket with one removable shank at the back of the bucket, having a replaceable tooth be provided for separate purchase. All other requirements shall be as for the general purpose bucket (3.2.4.2.1).

3.2.4.2.3 Reserved.

3.2.4.2.4 Auger. When specified, the tractor shall be provided with a rear mounted, earth-boring auger with interchangeable bits, suitable to small boring operations in a variety of soils (see 3.3.4). A nominal 12-inch bit (threshold), and 24-inch bit (objective) shall be supplied with the Type II tractor; and one 12-inch, and one 24-inch bit (threshold) with the Type IV. The Type IV will have the capability to use 36-inch bits (objective). The bits shall feature bit pilots; and replaceable, double cutting teeth, standard or suitable to boring into rocky or frozen soil, as specified. The HMEE auger must have the ability to dig to a depth of 8 feet (threshold). The auger shall be capable of operation in a well or poorly graded and compacted, coarse or fine grained, gravel/sand/clay mix soils. The auger shall offset such that it can bore vertically with the vehicle located in any orientation on a slope up to 20 degrees. The tractor shall be capable of performance specified in 3.3.3.5, at a minimum, with the auger in use.

3.2.4.2.5 Reserved.

3.2.4.2.6 Tamper/compactor. When specified, the tractor shall be provided with a ramming type, embankment backfill compactor, having a (substitutable) rectangular tamping shoe with a contact area of not less than 340 square inches. The compactor may include a sprinkler system, for use with asphalt, etc., but it shall be suppressible. The compactor shall be capable of developing a force of up to 3000 pounds, at a rate of up to 600 bpm. The tractor shall have a means to suspend the tamper in the transport mode, to a ground clearance of not less than 10 inches, or shall be removable by the operator. It shall incorporate a positive locking device to inactivate its mechanics, and means to lift the tamper/compactor to its transport position in the event of system failure.

3.2.4.2.7 Rock drill. The rock drill shall be capable of drilling with bits up to 3 inches in diameter and 24 inches in length.

3.2.4.2.8 Rock Breaker. When specified, a jack-hammering, concrete and rock breaker, that produces an impact energy of not less than 250 foot-pounds, at up to 1000 bpm shall be furnished. The breaker shall be capable of operation at any position, from down to 75 degrees

from that perpendicular, in any direction, and impart the force only to the bit. One 3-inch by 24 inch long bit shall be provided with the breaker.

3.2.4.3 Tool attachments. Each tractor shall be furnished with portable, hydraulically driven, auxiliary tools powered by the tractor's hydraulic system. For compatibility with fielded systems, the tools shall be capable of operation at 2,500 pounds per square inch (psi) and accept up to 250 psi back pressure at the tool outlet. Tools shall be equipped with a variable speed control valve and a standard dual pigtail, or whip hoses, a minimum of 8 inches long. All internal moving parts of the tools shall be sealed in or be continuously lubricated by the hydraulic fluid of the system, and not require additional lubrication. The operating temperature of handles and other gripping surfaces shall not exceed 120°F.

3.2.4.3.1 Rock/pavement breaker. A handheld, percussive, concrete and pavement breaker that produces up to 1600 bpm, at approximately 45 foot-pounds per blow shall be furnished. The breaker shall be capable of operation at any position, from down to 75 degrees from that perpendicular, in any direction. One 5-1/2 inch clay spade, one Moil point, and one 3-inch chisel point shall be provided with the breaker.

3.2.4.3.2 Hammer, impact tool. A handheld, rotary-percussive hammering drill, that produces up to 2000 bpm at 300 revolutions per minute (rpm) shall be furnished. The hammer drill shall accept carbide tipped fluted drills, and core bits; and be capable of forward and reverse rotation with control of bpm and rpm. One 3/4 inch carbide bit, not less than 18 inches long; one 1-inch carbide bit, 24 inches long; and one 2-inch carbide bit, 24 inches long shall be provided with the
hammer.

3.2.4.3.3 Post driver. A handheld post driver capable of driving “U” channel, 2-5/8 inch round or 2-1/2 inch square posts. The post driver shall have a flow range of 7 to 9 gpm and produce 2000 psi of pressure.

3.2.4.3.4 Impact wrench. A handheld, ¾-inch square drive, impact wrench shall be furnished. The impact wrench shall at a minimum, produce enough torque to perform all operator tasks, on all components of the tractor, to include attachments and their fixtures, and the ROPS/FOPS/cab, if removal is required for transportation of the vehicle. The wrench shall be provided with a standard set of linear and metric sockets and any other tools necessary to perform those tasks.

3.2.4.3.5 Chain saw. A handheld chain saw, that operates at up to 3000 feet per minute shall be furnished. The saw shall be equipped with a 15-inch bar without a nose sprocket, a positive locking device on the chain adjustment assembly, and an anti-kickback feature. It is desired that the saw be equipped with an 18-inch bar. At a minimum, a sheath and maintenance kit, comprising a depth gauge; sharpening file(s); a file guide, holder, and clamp; and a wrench shall be provided.

3.2.4.3.6 Hose reel. A hose reel assembly connected to the hydraulic system with dual hydraulic lines having not less than 50 feet of extension shall be provided to enable remote use

of the hydraulic tools. It is desired that the hose reel have 100 feet of dual hydraulic line. The reel shall be equipped with an auto-clamping, dispensing mechanism; to feed and cinch various lengths of hose for use; and a spring-return mechanism, to retract. The hose reel assembly shall be mounted in a protected location to preclude damage. All tool attachments and hoses shall utilize quick disconnect couplers compatible with Aeroquip FD49-1002-06-06 male and Aeroquip FD49-1001-06-06 female couplers or equivalent.

3.2.5 Electronic over hydraulic (EOH). The tractor shall include electronic over hydraulic (EOH) controls. The EOH controls, at a minimum, the loader, excavator, auxiliary hydraulic, and stabilizer system.

3.3 Performance characteristics. The tractor, in any configuration specified (see 3.2), shall be capable of meeting the performance criteria specified in the subordinate paragraphs, at a minimum. The tractor shall operate on standard military fuels and lubricants (see 3.2.3.1, 3.2.3.1.2, 3.2.3.3, and 3.6.1.1), with no adverse effect on vehicle components or serviceability. Scheduled maintenance intervals shall not be less than fifty hours, except for before and after operation checks and services. These requirements apply after exposure to and under any environmental conditions specified herein (see 3.5).

3.3.1 Operability. The tractor shall be able to operate under all conditions specified herein, to within 10 percent of its fuel reserve. The tractor and its components shall start within 5 minutes without external aids and operate within 15 minutes of starting, at altitudes from 0 to +5,000 feet while in the temperature range of +110°F to –25°F without the use of a kit. The tractor and its components shall start within 15 minutes and operate within 30 minutes at the above altitudes in the ambient temperature range of –35°F to –50°F with the installation of an Arctic Cold Weather Kit (see 6.2).

3.3.1.1 Reserved.

3.3.1.2 Arctic cold weather kit. When specified (see 6.2) an Arctic Cold Weather Kit shall be provided. All tractors shall be capable of accepting the Arctic Cold Weather Kit. Each kit shall not take longer than 4 man-hours to install by qualified maintainers at the unit level maintenance. Without the use of external aids, the kit shall enable the following:

a. Engine start within 15 minutes, after preheating engine, and battery components if necessary, for not greater than 15 minutes.
b. Cab temperature stabilization, to not less than +40°F, in the area occupied by the seated operator's torso, within 1 hour of personnel heater start.
c. Clearance of ice and frost from windshield and windows, sufficient for visibility of the tractor attachments and work area to permit safe operation, within 1 hour of personnel heater start.
d. Systems functionality, to include all brake and transmission controls within 15 minutes after engine start.
e. Controls operability, to include all attachments and auxiliary tools within 15 minutes after engine start. The kit shall be integral with the tractor; and not adversely affect performance.

3.3.2 Mobility. The fully equipped tractor shall be capable of paved road deployment and cross-country operation to allow utility over varied terrain ranging from firm ground, through soft soil, sand, and mud, to snow. The steering system shall provide directional control of the tractor, traveling at any attainable speed, forward and reverse, and under any operational or environmental condition specified herein. The minimum achievable curb clearance circle, when measured as specified in SAE J695, shall be no greater than 52 feet.

3.3.2.1 Gradeability. While off-road, the tractor shall be capable of starting and stopping on, and ascending and descending, a 60 percent grade free of loose material. The tractor shall be capable of negotiating side slopes of up to 30 percent, in both directions, off-road, without any wheel leaving the surface. The angle of approach and departure for the tractor, in travel mode, shall not be less than 30 degrees. The tractor shall also be capable of negotiating an 18-inch vertical step, forward and in reverse, without assistance of the attachments or stabilizers.

3.3.2.2 Fording. Without preparation or special procedure, the tractor shall withstand fording hardbottom water crossings to a depth of 40 inches with the turbulence caused by movement through the water. It shall be capable of being partially submersed for periods not less than 15 minutes, at intervals of 15 minutes within a 2-1/2 hour period, without damage or contamination of fluids. Fording shall be accomplished without maintenance between submersions or prior to subsequent operation. Construction shall afford drainage of accumulated water with no intervention by operators, other than operation of a handle or switch to initiate, if required.

3.3.2.3 Travel Speed. With the engine at governed speed, the unencumbered tractor shall be capable of maintaining a sustained speed of not less than 40 mph, on level, dry, roads; of not less than 30 mph on a 3 percent grade; and of not less than 25 mph cross-country. It is desired that the tractor be capable of a sustained speed of 65 mph on level, dry, roads and 40 mph cross-country. The tractor towing a 10,000-pound (GVW) pneumatic tired trailer, on dry roads shall maintain a speed of not less than 20 mph on a 3 percent grade; and of not less than 3 mph on a 30 percent grade. The tractor, with attachments in the travel position and towing the same trailer, shall be capable of negotiating a 20 percent side slope. During towing operations, the tractor shall be capable of full turn steering without damage to or interference with the trailer. The tractor itself shall be capable of being towed at a sustained speed of not less than 25 mph on level, dry roads; and not less than 5 mph cross-country. It is desired that the tractor be capable of being towed at a sustained speed of 40 mph on level, dry roads.

3.3.2.3.1 Reserve tractive ability. The tractor shall develop a reserve tractive force (draw-bar pull) of not less than 11,000 pounds at 2.0 ± 0.1 mph, on a dry level concrete surface with no more than 15 percent slip, in accordance with ISO 7464.

3.3.2.4 Ride quality. The tractor shall be capable of traveling at a speed of 25 mph, with tires at normal cross country inflation pressure, and sustaining a maximum of 6 watts vertical absorbed power at the driver's station, over a 1.0-inch root mean square (RMS) course; and at 12 mph over a 1.5-inch RMS course. The tractor shall be capable of traveling at not less than 40 mph over a four-inch, half round obstacle without transmitting a vertical shock load in excess of 2.5 g's to the driver.

3.3.2.5 Braking. The fully equipped tractor shall be capable of making a straight line full stop from a speed of 20 mph within 35 feet and from 40 mph within 125 feet on dry, level pavement. The service brakes shall also stop and hold the fully equipped tractor on a 60 percent grade of dry concrete, traveling either uphill or down, requiring a force not greater than 37 pounds to actuate. In the event of power assist failure, the brakes shall be operable with a force not to exceed 70 pounds with the tractor on a level surface.

3.3.3 Stability. The tractor shall maintain an operational stability sufficient to optimal functionality of all components, under the conditions and environments specified herein. In addition to that provided by the displacement of the tires, the design may rely on the use of stabilizers to accomplish stability in off-road conditions, particularly in excavation. At a minimum, the tractor shall meet the subordinate requirements.

3.3.3.1 Loader. On firm ground, with the rear attachment in the travel position and, except as noted, the bucket with rated operational load (see 3.3.5.1); without any tire leaving the surface; the tractor shall be capable of:

a. Negotiating a 4-inch deep pothole (see 6.8.5) at a speed between 3.5 and 5 mph, with the bucket 12 inches off the ground, and at the maximum lift height.
b. Negotiating a 20 percent longitudinal grade, with the bucket 12 inches off the ground.
c. Negotiating a 15 percent side slope in both directions, with the bucket 12inches off the ground.
d. Negotiating an 8-inch deep wheel rut at a speed between 3.5 and 5 mph, at an angle not greater than 30 degrees, with the bucket 12 inches off the ground, uniformly loaded with 1500 pounds.

3.3.3.2 Forklift. On firm ground, with the rear attachment in the travel position, the forklift with rated lift capacity (see 3.3.5.2), and front suspension lockouts engaged; without any tire leaving the surface, the tractor shall be capable of:

a. Negotiating a 4-inch deep pothole at a speed between 3.5 and 5 mph, with the tines 12 inches off the ground.
b. Negotiating a 12 percent longitudinal grade in both directions (downhill in reverse), with the tines 12 inches off the ground.
c. Negotiating a 12 percent side slope in both directions, with the tines positioned at the minimum height affording ground clearance.

3.3.3.3 Backhoe. With rear stabilizers and loader bucket implanted in firm ground, removing the tractor weight from its wheels, and the backhoe bucket filled to rated boom lift capacity (see 3.3.5.3); without the loader or stabilizer leaving the surface, the tractor shall be capable of:

a. Oscillating the backhoe smoothly through its full swing arc; with it positioned uphill on a 30 percent longitudinal grade; extended to two-thirds of its maximum reach, and the bucket positioned 4 feet off and parallel to the ground.

b. Oscillating the backhoe smoothly from the tractor's centerline to its extreme on the uphill side of the tractor and back, in both directions on a 15 percent side slope, with the backhoe extended to two-thirds of its maximum reach, and the bucket positioned 4 feet off and parallel to the ground.

3.3.3.4 Reserved.

3.3.3.5 Auger. With stabilizers set to level the tractor and front suspension lockouts engaged, the configuration shall permit full depth boring and extraction of the auger bit, at rated torque and maximum speed capacities (see 3.3.5.5), on 9 percent longitudinal grade and side slopes, in both directions, without any tire or stabilizer leaving the surface.

3.3.4 Hydraulics. The system shall provide for operation of the hydraulic tools with the tractor in a stationary position. If at engine idle there is not sufficient hydraulic flow and/or pressure to operate the tools, a means shall be provided to automatically adjust and maintain engine speed or otherwise overcome the limitation. External hydraulic system leakage shall not exceed that indicated for a class 3 system, in accordance with SAE J1176.

3.3.5 Attachment operation.

3.3.5.1 Loader performance. The front mounted multifunction bucket loader attachment shall have the following capabilities as defined in ISO 14397-1:

Characteristic	Type IV	Type II
Bucket capacity	3/4 cubic yard, minimum	3/4 cubic yard, minimum
Breakout force	6600 pounds, minimum	6600 pounds, minimum
Loader reach	30.00 inches, minimum	30.00 inches, minimum
Dump angle	45 degrees, minimum	45 degrees, minimum
Dump height	115.00 inches, minimum	115.00 inches, minimum
Operational load	3300 pounds, minimum	3300 pounds, minimum
Tipping load	6600 pounds, minimum	6600 pounds, minimum
Raise time (to max lift)	6 seconds, maximum	6 seconds, maximum
Lowering time (from max lift)	6 seconds, maximum	6 seconds, maximum
Digging depth	4.00 inches, minimum	4.00 inches, minimum
Bucket width	1.00 inch wider, each side, than tractor, minimum	

3.3.5.2 Forklift performance. The front mounted forklift attachment shall have the following capabilities:

Characteristic	Type IV	Type II
Lift capacity (24-inch load center)	4000 pounds, minimum	2000 pounds, minimum
Lift height	102.00 inches, minimum	102.00 inches, minimum
Fork carriage rotation (left & right)	15 degrees, minimum	15 degrees, minimum
Mast tilt (forward/back of vertical)	8/10 degrees, minimum	8/10 degrees, minimum

Fork overload (at load center)	12000 pounds, minimum	6000 pounds, minimum

3.3.5.3 Backhoe performance. The rear mounted backhoe attachment shall have the following capabilities as defined in SAE J31, ISO 6015, and ISO 7451:

Characteristic	Type IV	Type II
Digging depth	144.00 inches, minimum	96.00 inches, minimum
Loading height	132.00 inches, minimum	132.00 inches, minimum
Digging force, bucket cylinder	8000 pounds, minimum	8000 pounds, minimum
Digging force, dipper-stick cylinder	4000 pounds, minimum	4000 pounds, minimum
Dipper-stick lift capacity	2900 pounds, minimum	2900 pounds, minimum
Boom lift capacity	2500 pounds, minimum	2500 pounds, minimum
Swing arc (left & right of center)	80 degrees, minimum	80 degrees, minimum
Bucket capacity	1/4 cubic yard, minimum	1/4 cubic yard, minimum

3.3.5.4 Reserved.

3.3.5.5 Auger performance. The rear mounted auger attachment shall have the following capabilities:

Characteristic	Type IV	Type II
Bore diameter	12.00 – 24.00 inches	12.00 inches
Bore depth	8 feet, minimum	8 feet, minimum
Speed (Revolution per minute)	0-180 rpm, maximum	0-180 rpm, maximum
Torque (up and down)	3800 pounds–ft minimum	3800 pounds-ft minimum
Bore rate (12.00 inch bore to 6 feet)	90 seconds, maximum	90 seconds, maximum

3.4 Interface requirements.

3.4.1 Dimensions. The tractor, when reconfigured as necessary for transportation (see 3.4.3), shall not be greater than 102.00 inches high. To allow for airdrop, height of Type II tractors shall be reducible to 90.50 inches or less without deflation of tires, or removal of the wheels or cab. Height reduction shall be capable of being accomplished utilizing only onboard tools (see 3.2.3.9). The overall width shall not be greater than 96.00 inches, configured for transport. Additionally, the tractor shall not exceed Gabarit International de Chargement (GIC) clearance dimensions (see 3.4.3) when loaded on a 50 inch high deck rail car.

3.4.2 Reserved.

3.4.3 Transportability. The tractor shall be fit for self-deployment on highways worldwide; and capable of being transported by rail, marine, and air modes in C-130 aircraft in accordance with MIL-STD-1366 as described in MIL-STD-1791. Type II and Type IV tractors shall be C-130 aircraft transportable and low velocity airdrop (LVAD) capable. Type II tractors shall be lifted underslung by CH-47 helicopter in one lift. The Type IV tractor shall be

transportable by CH-47 in a maximum of two lifts (disassembly shall take less than 30 minutes, 15 minutes desired and each lift cannot exceed 16,000 pounds) (objective). The tractor shall conform to Gabarit International de Chargement clearance dimensions, shown on Figure 1, for rail transport, and transportability criteria as set forth in MIL-STD-1366. The tractor design shall enable preparation for fixed wing air transport, and re-assembly after, to be accomplished in 90 minutes or less for each, using only onboard tools. It is desired that the tractor requires no disassembly for C-130 transport. Slinging and tiedown provisions shall counteract detrimental vibration and impact forces encountered in handling and transportation, withstanding malfunction, damage, or permanent deformation. Lift and tie-down provisions shall be labeled as applicable in 1-inch high black letters.

3.4.3.1 Slinging provisions. The tractor shall be provided with slinging provisions conforming to MIL-STD-209, for Type IV equipment. The provisions shall enable the tractor to be lifted in its normal operating orientation. Type II tractors shall meet certification criteria of MIL-STD-913 for helicopter slinging.

3.4.3.2 Tiedown provisions. The tractor shall be provided with integral provisions to permit tiedown to the floor or deck of the transport vehicle or airdrop platform. The tiedown provisions shall conform to MIL-STD-209 and MIL-STD-814 for low velocity airdrop requirements.

3.4.3.3 Airdrop provisions. Guidance in design for airdrop from aircraft may be obtained from MIL-HDBK-669 and MIL-STD-1791. When rigged for airdrop (see MIL-HDBK-669), the tractor shall meet established tipoff curves for C-130 and C-141 aircraft (see MIL-STD-1791). For low velocity airdrop, disassembly and re-assembly shall be accomplished by two people in a combined time not greater than 60 minutes. The suspension system and tires shall be capable of withstanding the vertical travel experienced on impact.

3.4.3.4 Rail Transportability. The tractor with attachments shall be rail transportable in CONUS and NATO countries without restrictions. The tractor shall be capable of withstanding shock loads resulting from rail impact test without degradation or damage. When loaded on a 50-inch high rail car, the tractor shall meet the dimensional requirements of the Association of American Railroads (AAR) Outline Diagram for Single Loads, Without End Overhang, on Open-Top Cars and the Gabarit International de Chargement (GIC) equipment gauge diagram which apply to Standard gauge rail lines in the Continental United States (CONUS) and European countries.

3.4.3.5 Marine Transportability. The tractor shall be transportable on breakbulk (general cargo), roll-on/roll-off (RORO) ships, and barge carrying (LASH and SEABEE) ships without disassembly. The tractor shall also be transportable on the LARC-LX and larger tactical lighterage.

3.4.4 Government-loaned property. Unless otherwise specified (see 6.2), the following property in the quantities indicated in the contract or order, will be loaned by the Government (see 6.6):

Description	Identification
Nuclear, Biological, and Chemical protective ensemble (MOPP IV)	(See 3.6.5.1)
Cold Weather (Arctic)	(See 3.6.5.1)
SINCGARS Radio Set, AN/VRC-88A (w/RT1523 C/U)	5820-01-267-9481
w/Antenna Vehicular AS-3684/VRC	w/ 5985-01-189-7925
Current Army TMDE (WATS)	N/A
MFoCS II	N/A

Other vehicles listed in 3.4.3 are available for inspection at various government installations, and interface drawings are available for loan. Arrangements for access to them shall be scheduled through the contracting officer.

3.5 Environmental parameters.

3.5.1 Operating temperatures. Except as required in 3.3.1.2, the tractor shall perform as specified herein, continuously for not less than 10 hours, in any ambient temperature from -25°F to 110°F, without performance degradation, or mechanical or electrical failure.

3.5.2 Storage temperatures. The tractor shall withstand indefinite storage in any ambient temperature from -50°F to 160°F.

3.5.3 Reserved.

3.5.4 Reserved.

3.5.5 Rain. The tractor, in its operational configuration, shall be capable of withstanding rain at a rate not less than 4 in/hr with a wind velocity greater than 30 mph, when tested IAW paragraph 4.5.11.5.

3.5.6 Fungus. Components and materials used in the construction of the tractor shall be fungus inert see 6.8.4), when tested IAW paragraph 4.5.11.6. Parts not constructed of fungus-inert materials shall be treated with a moisture and fungus proof varnish or other commercially available preparation. This requirement need not apply to components within hermetically sealed enclosures.

3.5.7 Sand/Dust. The tractor shall be capable of withstanding a 12-hour exposure to particulate concentrations maintained at 1.32 ± 0.66 ounces per cubic foot and the air velocity regulated from 300 ft/min to 1750 ft/min, when tested IAW paragraph 4.5.11.7.

3.5.8 Reserved.

3.6 Sustainment parameters.

3.6.1 Maintainability. Provisions shall be made for inspection, adjustment, servicing, and replacement of components. Items requiring periodic or preventive maintenance shall be

accessible without requiring removal of other components. When openings are necessary for access to components, they shall conform to the requirements of 3.6.5.4 and be provided with a removable or hinged cover when in an exterior wall or bulkhead.

3.6.1.1 Ease of maintenance. The time required to accomplish 'Before' and 'After' daily preventive maintenance checks and service (PMCS) on the tractor shall not be greater than 30 minutes each. Provisions for drainage of liquids from components shall not permit drainage onto other components; but directly, or routed, into a suitable container. Drain plugs installed in engine, transmission, transfer case, axles and hydraulic reservoirs shall be at the lowest point and feature permanent magnet assembly or an equivalent ease-of-maintenance aid(s). Engine drain shall be in accordance with SAE J1069. The same or similar ease-of-maintenance aids shall be incorporated into other components requiring disengagement or disassembly, like the transmission oil pan, filter housings, etc. Lubrication fittings shall conform to SAE J534, and be located in a protected, accessible location with sufficient clearance for attaching the hydraulic adapter (see 3.2.3.9).

3.6.2 Reliability. At the field maintenance level, the tractor shall demonstrate a mean time to repair (MTTR) of not greater than 2.5 hours, for on-system essential function (see 6.8.7) failures, and an MTTR of not greater than 1.2 hours, for all other on-system function failures. The tractor shall demonstrate a mean time between essential function failures (MTBEFF) of not less than 110 hours (200 hours desired).

3.6.2.1 Tractor durability. During normal use, in any of the environments specified, components, to include seals, welds, etc., shall not sustain damage that impairs structural integrity, develops malfunctioning systems or changes the operating characteristics of the tractor.

3.6.3 Survivability. The tractor shall have the capability to either accept armor protection or be provided with an interchangeable armor cab to provide complete operator protection against direct small arms fire and mine blasts.

3.6.3.1 Electromagnetic Environmental Effects (E3). The production representative version of the system shall be electromagnetically compatible among all subsystems and equipment within the system and with E3 external to the system. To meet this requirement compliance to MIL-STD-464 to the extent delineated in the following paragraphs shall be achieved.

3.6.3.1.1 Intra-system Electromagnetic Compatibility (EMC). The system shall be electromagnetically compatible within itself such that the system operational performance requirements are met. Individual subsystems and equipment shall meet interference control requirements (such as conducted emissions, radiated emissions, conducted susceptibility and radiated susceptibility requirements of MIL-STD-461) such that the overall system complies with MIL-STD-464.

3.6.3.1.2 Inter-system EMC. The system shall be electromagnetically compatible with its defined Electromagnetic Environment (EME) such that its operational performance requirements are met. The applicable external EME for ground systems is described in MIL-STD-464 Table

1D. Inter-system EMC covers compatibility with, but is not limited to like platforms (such as other HMEEs), friendly emitters, and hostile emitters.

3.6.3.1.3 High-altitude EMP (HEMP). The system shall meet its operational performance requirements after being subject to the HEMP environment. Recycling power to restore operations is acceptable. The HEMP environment is defined by MIL-STD-2169B.

3.6.3.1.4 Electromagnetic radiation hazards (EMRADHAZ). The system design shall protect personnel, fuels and ordnance from hazardous effects of electromagnetic radiation.

3.6.3.1.4.1 Hazards of electromagnetic radiation to personnel (HERP). The system shall comply with current national criteria for the protection of personnel against the effect of electromagnetic radiation. DoD policy is currently found in DoDI 6055.11.

3.6.3.1.4.2 Hazards of electromagnetic radiation to fuel (HERF). Radiated EMEs shall not inadvertently ignite fuels. The EME includes onboard emitters and the external EME (see 3.6.3.1.3).

3.6.3.2 Nuclear, biological, and chemical (NBC) contamination. Tractor components, to include hydraulic hoses, shall be able to operate in an NBC environment and survive decontamination. Materials, particularly those used externally, shall be resistant to chemical and biological agents and to the decontaminators used to neutralize these agents.

3.6.3.3 Crew protection armor kit. The tractor, with the armor kit, shall be easily and quickly installed, and maximize commonality of attaching hardware with no special tools required for maintenance. Operator's visibility shall not be impeded to the point of not being able to safely operate the tractor. The door shall have a combat lock to provide security for the operator. Means shall be provided to prevent accidental closure when parked on an incline thereby reducing the risk of injury to personnel. Operation of the egress shall be capable of being accomplished internally by the driver or externally by rescue personnel without tools. However, the use of a wrench to unlock the combat lock shall be the same combat rescue wrench use for the other armored vehicles (e.g. HMMWV, Material Handling Equipment and Construction Equipment). It is required that the tractor meet the requirements of 3.6.4.1 ROPS/FOPS after installation of the CPK.

3.6.4 Protective devices. The tractor shall be equipped with provisions to protect it against damage incident to its role in early-entry mobility, counter-mobility, excavation, and materials handling tasks. At a minimum, it shall be provided with guards for lights and hydraulic lines; and shall conform to these subordinate requirements.

3.6.4.1 Roll over protective structure (ROPS) / Falling object protective structure (FOPS). The tractor shall be equipped with combination ROPS and FOPS provisions, which may be inherent to the cab. The provisions shall conform to the Occupational Safety and Health Act (OSHA) Standards for Construction Equipment, and shall meet the requirements of SAE J1040_200305 (ROPS) and ISO 3499 (FOPS), respectively. Quick disconnect fittings (electric, hydraulic, etc.) shall be provided if the ROPS/FOPS cab, or structure, as applicable, is

removable. When applicable, the tractor shall be capable of being driven when a ROPS/FOPS cab is removed. Lifting eye(s) conforming to dimensional and strength requirements of MIL-STD-209 shall be provided for ROPS and FOPS structure or ROPS/FOPS cab removal.

3.6.4.2 Fenders. Fenders or equivalent protection shall be provided for all wheels; a continuous fender (front to rear) on each side of the tractor is acceptable. Adequate clearance for vehicle maintenance and installation and removal of tire chains and the wheels shall be provided. Fenders shall afford, at least, momentary (60 seconds) support for operator or maintenance personnel without permanent damage or deformation.

3.6.4.3 Wheel splash and stone throw protection. Anti-sail, flexible, mud flaps shall be provided to preclude mud and debris from being thrown onto mirrors, the tractor body, and lights. Mud flaps shall be mounted to react passively in turning situations, preventing damage to towed equipment and minimizing damage to flaps. They shall be removable using only common hand tools.

3.6.5 Human engineering. Human engineering criteria principles and practices shall be considered as part of the tractor construction. The tractor shall be capable of being deployed and operated by 5th through 95th percentile military personnel in body armor as well as in mission oriented protective posture (MOPP) IV gear (see 3.6.5.1). The use of night-vision goggles by the operator shall be considered in the layout and light intensities of displays. Special emphasis shall be given, but not limited to, visual displays, control/display integration, controls, labeling, anthropometry, design for maintainability, and hazard and safety criteria, as applicable. The unit shall conform to human factors engineering standards, including but not limited to ISO 3411, J185, ISO 6682. MIL-STD-1472 may be used for information and guidance on human factors engineering for Army materiel.

3.6.5.1 Personnel gear. The tractor and all its controls and systems shall be operable by personnel wearing the following ensembles. Unless otherwise specified (see 6.2), the following property, in the quantities indicated in the contract or order, will be loaned by the Government (see 6.6):

MOPP IV:

a. Chemical-biological mask MIL-M-51282 (NSN 4240-00-926-4200)
b. Chemical-biological hood MIL-H-51291 (NSN 4240-00-999-0420)
c. Chemical protective suit MIL-S-43926 (NSN 8415-00-407-1062)
d. Chemical protective glove set MIL-G-43976 (NSN 8415-00-033-3519)
e. Chemical protective footwear MIL-F-43987 (NSN 8430-01-021-5978)

Cold Weather (Arctic):

a. Undershirt, Polypropylene NSN 8415-01-227-9550
b. Drawers, Polypropylene NSN 8415-01-227-9545
c. Shirt, Polyester, Fiberpile NSN 8415-01-228-1356
d. Overall, Bib, Fiberpile NSN 8415-01-228-1329

e. Liner, Trousers, Field NSN 8415-01-180-0370
f. Liner, Coat NSN 8415-00-782-2889
g. Trousers, Cold Camouflage NSN 8415-01-102-6806
h. Parka, Camouflage NSN 8415-01-228-1319
i. Trousers, Camouflage NSN 8415-01-228-1349
j. Mitten Set NSN 8415-00-782-6717
k. Mitten Shells NSN: 8415-00-926-1527
l. Mitten Inserts NSN 8415-00-160-0769
m. Hood NSN 8415-01-310-0606
n. Parka, Snow Camouflage NSN 8415-00-223-7627
o. Trousers, Snow, Camouflage NSN 8415-00-935-0574
p. Boot NSN 8430-00-655-5549

Personal Protective & Load-Bearing Equipment (PPE/LBE):

a. IOTV Gen IV Complete Vest, NSN 8470-01-642-1259
b. IHPS Helmet – with Rails, NSN 8470-01-672-2383
c. Army Combat Glove Capacitive, NSN 8415-01-05-0958
d. Tactical Assault Panel (TAP), NSN 8465-01-641-8924
    1. Double M4 Mag Pouch, NSN 8465-01-641-9431
    2. Canteen Pouch, NSN 8465-01-641-9310
    3. 1 Qt Canteen (with M40 Mask CBRN Cap), NSN 8465-01-115-0026
    4. Triple M4 Mag Pouch x2, NSN 8465-01-641-9389
    5. Tourniquet Pouch Issued with IFAK2, NSN 8465-01-F90-0701
    6. IFAK 2 Pouch, NSN 8465-01-F90-2337

3.6.5.2 Human factors. The design shall foster effective performance of operating procedures, effective personnel safety and health environment, and minimize factors that contribute to increased operator error. The design shall incorporate protection from toxic, electrical, thermal, mechanical, and other potential hazards. The design shall also reflect efficient arrangement of equipment and components; and feature characteristics that ensure rapidity, safety, ease, and economy of use. The equipment shall represent the simplest design consistent with functional requirements.

3.6.5.3 Noise limits. Steady-state noise produced by the tractor shall not exceed 85 dB(A), for sustained exposure, as measured in 4.5.15.1. If it does not, and remedial procedures for noise suppression have been pursued to the satisfaction of the procuring activity, and permission to exceed the limit(s) is obtained, then hazard sign(s) shall be provided (see 3.6.5.5). At a minimum, each sign shall state "HEARING PROTECTION REQUIRED WITHIN (specify) FEET FOR PROLONGED EXPOSURE" and shall be legible from the distance indicated on the sign. Steady state interior noise level at each cab seating position shall not exceed 85dB(A) when tested in accordance with 4.5.15.1.

3.6.5.4 Accessibility. Compartment access and handles shall reflect compatibility with the Clothing and Personal Equipment (C/PE) for personnel using and maintaining equipment, under the environmental conditions specified herein, having space allocations commensurate

with the restrictions imposed on performance by C/PE. Service access dimensions shall conform to the requirements of SAE J925_199306. The handles or grasp areas shall also be located to provide clearance from obstructions and shall not interfere with operation or maintenance of the tractor or individual component installation and removal. Proper orientation of ancillary items and components for stowage on the unit shall be made obvious, either through compartment or fixture design or by means of appropriate labels.

3.6.5.5 Safety. The tractor shall comply with applicable Environmental, Safety, and Occupational Health (ESOH) Rules and Regulations, including DoDI 6055.1, DoDI 5000.02, AR 40-10, and MIL-STD-882, aided by the Army Health Hazard Assessment (HHA) program when requesting a Health Hazard Assessment Report (HHAR). Each tractor shall be provided with a fire extinguisher in accordance with A-A-393, Type I, Class 2, Size 2-1/2 lbs and shall be securely installed inside the cab in a location readily accessible to the operator. The tractor shall comply with applicable OSHA 29 CFR 1910 and 1926 Regulations. Asbestos, cadmium, radioactive material, and ozone depleting chemicals shall not be used in or on the tractor. Safety signs in accordance with SAE J115 shall be used where necessary. The engine hood (s) shall be of double latch construction meeting requirement 113.1 of MIL-STD-1180. Construction shall incorporate methods to protect personnel from shock hazards, to include consideration of ground currents and voltage limits (possible arcing). Adequate safeguards shall be incorporated into the design of the tractor and its components so that personnel shall not be exposed to concentrations of toxic or corrosive substances. Equipment that, in normal operation, exposes personnel to surface temperatures greater than 120°F for prolonged contact or handling, or 140°F for momentary contact, shall be appropriately guarded. Provisions to overcome ruptures in hydraulic lines shall be incorporated. Except where functionally required, exposed surfaces shall be free from burrs, sharp edges and corners, or other features that present a personnel safety hazard; or shall be shielded against contact. Danger or caution signs, labels, and markings shall be used to warn of potential or specific hazards. The sign(s) shall conform to NEMA Z535.2, be prominently displayed on the unit, and visible from any angle of approach. The accelerator control system for the tractor shall meet the requirement 124.1 of MIL-STD-1180.

3.6.5.5.1 Control override. In the event of failure or damage to the hydraulic system, means shall be provided for manual override of the hydraulic pressure, to retract and stow tractor attachments (see 3.2.4). Any inherent capability or subsystem of the tractor may be utilized, but provision shall be made for emergency control for all attachments. Provisions shall dislodge/empty the attachment and, at a minimum, move it into a position suitable for towing/self-deployment of the tractor.

3.6.5.5.2 Backup alarm. A backup alarm conforming to SAE J994, type C shall be provided. The alarm shall be automatically disabled when operating in the blackout mode (see 3.2.3.4.3). The backup alarm signal shall be audible above the tractor's noise level, and distinguishable from other onboard alarms.

3.6.5.5.3 Horn. An operator-controlled horn shall be furnished. The horn shall be 20 dB(A) above the tractor operating sound level at a distance of 50 feet in front of and behind vehicle. The horn shall be inoperable under blackout conditions (see 3.2.3.4.3).

3.6.5.6 Whole body vibration. Tractor shall not create vibrations that are harmful to the operator during operation. Induced vibrations to the operator under all operating conditions shall be measured in accordance with SAE J1013_200711.

3.6.6 Marking. The unit shall have marking or permanently attached data plates in a location where the data will be prominent and legible but not interfere with operation and maintenance. Safety and instructional markings shall not be obscured by components, from the operator's position, to include occasionally positioned levers, etc. Spillage or seepage of fluids, gaseous emissions, accumulations of grime, and areas subject to wear shall also be avoided in placement. Marking shall be of a contrasting color to the surface on which it is inscribed, and indelible for the anticipated life of the unit. Plates shall be constructed of a durable, corrosion, ozone, and weather resistant material.

3.6.6.1 Identification. An identification plate in accordance with A-A-50271 shall be provided in a prominent location at the front of the tractor. At a minimum, the unit shall be marked with:

Manufacturer's identification
Manufacturer's part number
Date of manufacture
Serial number
Registration number
Contract number
Item nomenclature
Type of unit
National stock number
CARC/Month/Year

All attachments or components removed or dissembled for shipment shall be individually identified, with match marking as required for ease of replacement and proper re-assembly.

3.6.6.1.1 U.S. registration number. The contractor shall stencil the vehicle's U.S. Registration Number on the vehicle in suitable locations. The contractor shall obtain the number for each vehicle from the Government, and shall stencil it on the vehicle IAW paragraph 3.6.6.2.

3.6.6.2 Safety, instructional, and component identification. Informational marking and lettering shall be flat black, centered and sized proportionate to the surface on which it is inscribed, shall be legible from the distance from which it is intended to be read, and shall use Sans Serif Gothic block font. Plates in accordance with ANSI Z535.1 and Z535.3 may be used in lieu of, or in conjunction with, lettering. On tractors with a camouflage pattern, markings shall be in accordance with requirements for camouflage. Lift, tiedown, and slinging provisions shall be identified, and the required tire pressure shall be inscribed above each tire as "TP (XX)" where XX is the cold inflation pressure in psi (show numbers only), in one-inch black letters. Caution markings shall be in accordance with NEMA Z535.2.

3.6.6.3 Military load classification identification. A classification number for the tractor(s) shall be displayed using the MLC sign kit, NSN 9905-00-565-6267, provided by the contractor. This sign shall be mounted on the front (passenger side) of the tractor and below the driver's line of vision. The vehicle weight classification number and nomenclature shall be assigned by the contracting officer (see 6.2).

4. VERIFICATION.

4.1 Classification of inspections. The inspection requirements specified herein are classified as follows:

a. First article inspection (see 4.2).
b. Conformance inspection (see 4.3).

4.1.1 Inspection. All inspection procedures shall be in accordance with standard commercial practice for Inspection Criteria, as is applicable at the contractor's facility.

4.2 First article inspection. First article inspection shall be performed on a complete tractor(s) (see 3.1 and 6.3). This inspection shall include the examination of 4.4 and first article inspection tests indicated in 4.5. Nonconformance to any specified requirement, the failure of any test, or the presence of one or more defects shall be cause for rejection.

4.3 Conformance inspection. Conformance inspection shall be performed on all production unit tractors; and shall include the examination of 4.4 and the conformance inspection tests indicated (Conf) in 4.5. Nonconformance to any specified requirement, the failure of any test, or the presence of one or more defects shall be cause for rejection.

4.4 Examination. Each tractor shall be physically examined for compliance with requirements specified in Table 1, to encompass performance, safety, human engineering, and dimensional requirements. The contractor shall demonstrate, or provide evidence of, compliance of items to requirements where it is not readily discernable or identifiable (e.g., BITE, or surge suppression). Noncompliance with any specified requirement, or the presence of one or more defects lessening required efficiency shall constitute cause for rejection. Each unit shall be examined for the defects specified in Table I. The government reserves the right to perform tests necessary to verify any requirement in Section 3.

Table I. Examination schedule.

Exam No.	Defect	Examination Method	Requirement Paragraph
E1	Configuration not as specified	Visual/Doc	3.2
E2	Materials not as specified	Visual/Doc	3.2.1
E3	Toxins, HazMats, or ODCs evidenced in components, manufacturing or finish	Visual/Doc	3.2.1
E4	Used, rebuilt or re-manufactured parts utilized	Visual/Doc	3.2.1.2
E5	Dissimilar metals not protected against galvanic	Visual/Doc	3.2.1.3

	corrosion as specified		
E6	Deterioration prevention and control not, as specified	Visual/Doc	3.2.1.4
E7	Finish not as specified	Visual/Doc	3.2.1.5
E8	Winterization subsystem missing, inoperable, or not as specified	Visual/Doc/SIE	3.3.1.2
E9	Miscellaneous tractor components missing, inoperable, or not as specified	Visual/Doc	3.2.3
E10	Engine components missing, inoperable, or not as specified	Visual/Doc/SIE	3.2.3.1
E11	Drive system components missing, inoperable, or not as specified	Visual/Doc/SIE	3.2.3.2
E12	Hydraulic system components missing, inoperable, or not as specified	Visual/Doc/SIE	3.2.3.3
E13	Electrical system components missing, inoperable, or not as specified	Visual/Doc/SIE	3.2.3.4
E14	Reserved		
E15	Chassis components missing, inoperable, or not as specified	Visual/Doc/SIE	3.2.3.5
E16	Cab components missing, inoperable, or not as specified	Visual/Doc/SIE	3.2.3.6
E17	Reserved		
E18	Storage provisions missing or not as specified	Visual/Doc	3.2.3.7
E19	Towing provisions missing, inoperable, or not as specified	Visual/Doc	3.2.3.8
E20	Ancillary items missing or not as specified	Visual/Doc/SIE	3.2.3.9
E21	Front attachments missing, inoperable, or not as specified	Visual/Doc/SIE	3.2.4.1
E22	Rear attachments missing, inoperable, or not as specified	Visual/Doc/SIE	3.2.4.2
E23	Tool attachments missing, inoperable, or not as specified	Visual/Doc/SIE	3.2.4.3
E24	Tractor curb clearance circle not as specified	Visual/SIE	3.3.2
E25	Excessive external leakage	Visual/Doc/SIE	3.3.4
E26	Tractor dimensions not as specified	Visual/Doc/SIE	3.4.1
E27	Reserved		
E28	Slinging provisions missing or not as specified	Visual/Doc	3.4.3.1
E29	Tiedown provisions missing or not as specified	Visual/Doc	3.4.3.2
E30	Airdrop provisions missing or not as specified	Visual/Doc	3.4.3.3
E31	Maintenance access provisions missing or not as specified	Visual/Doc/SIE	3.6.1 & 3.6.5.4
E32	Maintenance components missing, inoperable, or not as specified	Visual/Doc	3.6.1.1
E33	Survivability components missing, not as specified; or inoperable, as applicable	Visual/Doc	3.6.3

E34	Protective device components and provisions missing or not as specified	Visual/Doc	3.6.4
E35	Human factors provisions or layout not as specified	Visual/Doc	3.6.5.2
E36	Marking missing, illegible, or not as specified	Visual/Doc/SIE	3.6.5.3, 3.6.5.5, 3.6.6
E37	Safety provisions and control missing, inoperable, or not as specified	Visual/Doc/SIE	3.6.5.5
E38	Military Load Classification sign not as specified	Visual/Doc	3.6.6.3

Doc = Documentation, SIE = Standard Inspection Equipment

4.5 Tests. Unless otherwise specified herein, tests shall be conducted on the tractor as assembled and prepared for operation. No braces, sealing materials, tiedown devices, or other items that are not inherently a part of the operating tractor shall be employed. Each tractor shall be subjected to the tests in Table II.

TABLE II. Test schedule.

Test No.	First Article	Conf	Test	Test Paragraph	Requirement Paragraph
T1	X	X	Run-in	4.5.1.3	3.3
T2	X	-	Diagnostics	4.5.2	3.2.3.4.8
T3	X	-	Engine	4.5.3	3.2.3.1
T4	X	-	Transmission	4.5.4	3.2.3.2
T5	X	-	Hydraulics	4.5.5	3.2.3.3
T6	X	-	System filtration	4.5.5.1	3.2.3.3.2
T7	X	-	Attachment couplings	4.5.5.3	3.2.3.3.5
T8	X	-	Chassis	4.5.6	3.2.3.5
T9	X	-	Service brakes	4.5.6.1	3.2.3.5.5 & 3.3.2.5
T10	X	-	Parking brake	4.5.6.2	3.2.3.5.6
T11	X	-	Fenders	4.5.6.3	3.6.4.2
T12			Reserved		
T13	X	-	NBC environment	4.5.7.2	3.6.3.2
T14	X	-	Loader performance	4.5.7.3	3.2.4.1.2 & 3.3.5.1
T15	X	-	Forklift performance	4.5.7.4	3.2.4.1.4 & 3.3.5.2
T16	X	-	Sweeper	4.5.7.5	3.2.4.1.5
T17	X	-	Plow	4.5.7.6	3.2.4.1.6
T18	X	-	Roto-tiller	4.5.7.7	3.2.4.1.7
T19	X	-	Sprayer	4.5.7.8	3.2.4.1.8
T20	X	-	Backhoe performance	4.5.7.9	3.2.4.2.1 & 3.3.5.3
T21			Reserved		
T22	X	-	Auger	4.5.7.11	3.2.4.2.4 & 3.3.5.5
T23			Reserved		
T24	X	-	Tamper/compactor	4.5.7.13	3.2.4.2.6

T25	X	-	Rock/pavement breaker	4.5.7.14	3.2.4.3.1
T26	X	-	Hammer/impact tool	4.5.7.15	3.2.4.3.2
T27	X	-	Post driver	4.5.7.19	3.2.4.3.3
T28	X	-	Rock breaker	4.5.7.16	3.2.4.2.7
T29	X	-	Impact wrench	4.5.7.17	3.2.4.3.4
T30	X	-	Chain saw	4.5.7.18	3.2.4.3.5
T31	X	-	Electronic over hydraulic (EOH)	4.5.8.2 & 4.5.11	3.2.5
T32	X	-	Mobility	4.5.8	3.3.2
T33	X	-	Gradeability	4.5.8.1	3.3.2.1
T34	X	-	Fording	4.5.8.2	3.3.2.2
T35	X	-	Travel speed	4.5.8.3	3.3.2.3
T36	X	-	Reserve tractive ability	4.5.8.3.1	3.3.2.3.1
T37	X	-	Ride quality	4.5.8.3.2	3.3.2.4
T38	X	-	Stability	4.5.9	3.3.3
T39	X	-	Transportability	4.5.10	3.4.1 & 3.4.3
T40	X	-	Slinging provisions	4.5.10.1	3.4.3.1
T41	X	-	Tiedown provisions	4.5.10.2	3.4.3.2
T42	X	-	Rail impact	4.5.10.3	3.4.3.5
T43	X	-	Marine transportability	4.5.10.4	3.4.3.4
T44	X	-	High temperature	4.5.11.1	3.5.1 & 3.5.2
T45	X	-	Low temperature	4.5.11.2	3.5.1 & 3.5.2
T46	X	-	Arctic cold weather kit	4.5.11.2.1	3.3.1.2
T47			Reserved		
T48			Reserved		
T49	X	-	Rain	4.5.11.5	3.5.5
T50	X	-	Fungus	4.5.11.6	3.5.6
T51	X	-	Sand/Dust	4.5.11.7	3.5.7
T52			Reserved		
T53			Reserved		
T54	X	-	Maintainability	4.5.12	3.6.1
T55	X	-	Reliability	4.5.13	3.6.2
T56	X	-	Survivability	4.5.14	3.6.3
T57	X	-	Human factors	4.5.15	3.6.5 & 3.2.3.6
T58	X	-	Noise level	4.5.15.1	3.6.5.3
T59	X	-	Whole body vibration	4.5.15.2	3.6.5.6
T60	X	-	Safety	4.5.16	3.6.6.2

4.5.1 Test conditions. Unless otherwise specified (see 6.2), all tests shall be performed without shelter at climatic conditions existing at the place of test. The tractor shall be operated as specified herein without maintenance, other than scheduled maintenance as established by the maintenance schedule prepared by the contractor prior to testing. Before testing, each tractor shall be subjected to a run-in as specified in 4.5.1.3. All inspection equipment (meters, gauges, etc.) used for verification shall have been calibrated, to a governing national standard, within the preceding six months.

4.5.1.1 Preparation. Prior to test, the tractor(s) shall be lubricated and fluids brought to operating levels with greases, oils, and coolant as specified herein. The fill rate to the hydraulic reservoir shall be monitored (see 4.5.5). Fluids shall be those designated for use in the ambient temperature at the place of test, and Jet A1 fuel with static dissipaters, and icing and corrosion inhibitors (JP-8 and F-24) shall be used for all tests. All operational lights (except under blackout conditions) shall be on during operational tests.

4.5.1.2 Reserved.

4.5.1.3 Run-in. Start and operate each tractor for not less than one-half hour to ensure operation of all components and to allow for minor adjustments, as follows. Start and stop the engine not less than five times. Operate all attachment controls for five minutes; and hold each hydraulic control in the actuated position until the hydraulic system reaches relief valve pressure at least five times. Make at least five abrupt stops, from a speed not less than 25 mph, using the service brakes. Operate the tractor at least two times through a figure-eight steering course, at maximum safe speed. Release and reapply the parking brake not less than five times. Failure to operate as prescribed herein; evidence of any deficiency, malfunction, or leakage, the need for service of any component; or loose, disassembled, or broken items that reduce the required sufficiency of the unit shall constitute failure of this test.

4.5.2 Diagnostic. The tractors will be connected to the current U.S. Army Standard Unit Level Test Measurement and Diagnostic Equipment which is presently the WATS (Wireless At-Platform Test Set) test hardware. A nondestructive fault will be inserted and diagnosed for sections 4.5.2.1 and 4.5.2.2. Failure to diagnose the system fault will constitute failure of this test. Nonconformance to Sections 4.5.2.1 and 4.5.2.2 or failure of any component that degrades the vehicles diagnostics shall constitute failure of this test.

4.5.2.1 Electronic. The contractor will demonstrate via testing with current U.S. Army Unit Level Test Equipment to determine that the vehicle's ECM / ECU diagnostic outputs are transmitted to the vehicle mounted J1939/13 female 9 pin Deutsch connector, using a format conforming to SAE J1587.

4.5.2.2 Analog**.** If the vehicle incorporates a DCA connector (see 3.2.3.4.8.2), the contractor will demonstrate via testing with current U.S. Army Unit Level Test Equipment that the vehicle's DCA harness output is transmitted to the DCA Connector.

4.5.3 Engine. Other than verification that the engine is suited to the task of supporting all onboard systems, verification shall be restricted to a recording or extrapolation of fuel consumption; confirmation of cooling capabilities. Fuel consumption shall be monitored after run-in; the inability to provide sufficient fuel for 10 hours of continuous operation shall constitute failure of this test. Engine temperature shall be routinely monitored, at 30-minute intervals throughout all testing; any failure to meet the requirement of 3.2.3.1.1 shall constitute failure of this test.

4.5.4 Drive assembly. With transmission in the highest gear and the engine at full rpm, stall the automatic/powershift transmission for 30 seconds. Nonconformance to 3.2.3.2, rupture, or leakage shall constitute failure of this test.

4.5.5 Hydraulics. If a fill rate was not established at preparation for testing (see 4.5.1.1), the reservoir would be emptied sufficiently to do so now. The operating temperature of hydraulic fluid in the circuit shall be monitored after testing each attachment. Nonconformance to the requirement specified in 3.2.3.3.1, for fill rate, and in 3.2.3.3, for fluid temperature, shall constitute failure of this test. Specific system components shall be tested as follows.

4.5.5.1 System filtration. Pressurize the filter housing to not less than the minimum proof pressure and hold for not less than 60 seconds; then examine for leaks. Install a new element in the filter housing and establish maximum flow through the filter, at an oil temperature at 150 ± 5°F. Increase the upstream pressure, from 10 psi greater than that determined above, until the bypass flow exceeds 5 percent of the maximum system flow and reexamine. Nonconformance to the requirements of 3.2.3.3.2 shall constitute failure of this test.

4.5.5.2 Reserved.

4.5.5.3 Attachment couplings. With the hydraulic system activated, disconnect and reconnect all hydraulic, quick-disconnect couplings that can be (circuits that operate in excess of 60 psi may not disengage) 50 times, checking for leakage with each reconnection. Nonconformance to the requirements of 3.2.3.3.5 shall constitute failure of this test.

4.5.6 Chassis. During operability testing, the tractor chassis components shall be monitored and evaluated. Nonconformance to 3.2.3.5, failure to operate as prescribed herein, or any evidence of structural or weld failure, permanent deformation, cracks, or broken items that reduce the sufficiency of the unit shall constitute failure of this test. Specific system components shall be tested as follows.

4.5.6.1 Service brakes. The service brakes shall be tested in accordance with FMVSS 105 or 121. Nonconformance to the requirements of 3.2.3.5.5 shall constitute failure of this test.

4.5.6.2 Parking brake. The parking brake shall be tested in accordance with FMVSS 105 or 121. Nonconformance to the requirements of 3.2.3.5.6 shall constitute failure of this test.

4.5.6.3 Fenders. The tractor fenders shall be evaluated for construction and attachment. A 500-pound load shall be placed at the unsupported center(s) of each fender, as close as practicable to the outer edge; and allowed to remain for a period not less than 1 minute. Nonconformance to 3.6.4.2, or any permanent deformation or damage shall constitute failure of this test.

4.5.7 Operability.

4.5.7.1 Reserved.

4.5.7.2 NBC environment. The contractor shall demonstrate, or provide evidence of, the tractor's ability to withstand nuclear, biological, and chemical contamination and decontamination. The tractor shall be evaluated for its capacity to be operated by personnel wearing NBC decontamination protective gear. An operator dressed in a MOPP IV ensemble shall perform the testing in 4.5.1.3. In addition, the operator shall simulate filling the fuel tank and hydraulic reservoir, operate the stabilizers (outriggers) and not less than two attachment tools, and attach the tractor to a prime mover. Nonconformance to 3.6.3.2 or 3.6.5.1, or damage to the operator's protective gear, directly or indirectly attributable to the tractor, shall constitute failure of this test.

4.5.7.3 Loader performance. The tractor loader shall be assembled and operated in accordance with the manufacturer's instructions, to verify compliance with the requirements in 3.2.4.1.2 and 3.3.5.1. This testing may be accomplished during the reliability testing specified in 4.5.13.1. The loader, with each bucket assembled and filled to capacity with dry sand, shall be operated through its full range of motion and monitored for spillage. The sandbagger shall be attached and operated for not less than 20 minutes and its rate of filling sandbags monitored. The loader shall be tested for conformance to the minimum performance requirements for bucket capacity, breakout force, loader reach, dump angle, dump height, operational and tipping loads, raise and lowering times, digging depth, and bucket width. Nonconformance to the requirements of 3.2.4.1.2, 3.3.5.1, or failure to switch each attachment within 30 minutes shall constitute failure of this test.

4.5.7.4 Forklift performance. The tractor forklift shall be assembled and operated in accordance with the manufacturer's instructions, to verify compliance with the requirements in 3.2.4.1.4 and 3.3.5.2. This testing may be accomplished during the reliability testing specified in 4.5.13.2. The forklift shall be tested with a near-solid mass (center of gravity coincident with center of mass), on tines extended to their maximum reach. The forklift shall be tested for conformance to the minimum performance requirements for lift capacity, lift height, fork carriage rotation, mast tilt, and fork overload. Nonconformance to 3.2.4.1.4, 3.3.5.2 or failure to switch the attachment within 30 minutes, to operate as prescribed herein; evidence of any deficiency, malfunction, leakage, or the need for service of any component shall constitute failure of this test.

4.5.7.5 Sweeper. The tractor sweeper shall be assembled and operated in accordance with the manufacturer's instructions, to verify compliance with the requirements in 3.2.4.1.5. The sweeper shall be lowered onto a 6-degree transverse slope, and contact verified across the width of the brush. An area 1-1/2 times the width of the tractor and 1000 feet long shall be strewn with debris, clearly discernable from the underlying pavement, having particles not greater than 0.25 inches in diameter or a commensurate mass. The sweeper shall be activated, lowered to sweeping height, the tractor driven along the center of the 1000-foot strip at an average speed of 25 mph, and the area visually evaluated for removal of not less than 90 percent of the debris. A determination shall be made from not less than five passes, during the last of which not less than three panic stops of the broom shall be attempted. The sweeper shall be switched off, raised to its stowage height, locked, and its ground clearance measured. Nonconformance to 3.2.4.1.5, failure to switch the attachment within 30 minutes, to operate as prescribed herein; evidence of any

deficiency, malfunction, leakage, or the need for service of any component shall constitute failure of this test.

4.5.7.6 Plow. The tractor snowplow shall be assembled and operated in accordance with the manufacturer's instructions, to verify compliance with the requirements in 3.2.4.1.6. The plow blade shall be lowered onto a 6 degree transverse slope and contact verified across the width of the moldboard. An area 1-1/2 times the width of the tractor and 1000 feet long shall be piled with (simulated) snow one foot deep, having a water content not greater than 10 percent by volume. The blade shall be lowered to plowing height, angled to 30 degrees, and the tractor driven along the center of the 1000-foot strip at an average speed of 15 mph. The area shall be visually evaluated for removal of not less than 90 percent of the snow after two passes; and a determination made from not less than five attempts. The plow shall be driven against an embankment, not higher than 6.00 inches, at a speed that would produce a force of 2500 pounds against the bottom of the blade. The blade shall raised to its stowage height, locked, and its ground clearance measured; then repeated with the plow hydraulics deactivated. Nonconformance to 3.2.4.1.6, failure to switch the attachment within 30 minutes, to operate as prescribed herein; evidence of any deficiency, malfunction, leakage, or the need for service of any component shall constitute failure of this test.

4.5.7.7 Roto-tiller. The tractor roto-tiller shall be assembled and operated in accordance with the manufacturer's instructions, to verify compliance with the requirements in 3.2.4.1.7. An area twice the width of the tractor and 1000 feet long of undisturbed, well graded sand with silt and gravel (SW-SM soil), having a known water content, not greater than 20 percent shall be selected. The sprinkler system shall be filled with water, and set to dispense at 40 gpm. The tiller shall be lowered to harrowing height, the earth plowed to a depth of not less than 10.00 inches, at an average speed of 5 mph, and the depth and trituration assessed. The sprinkler system shall be activated, another area plowed, and evaluated for even saturation of the tilled earth. The tiller shall then raised to its stowage height, locked, and its ground clearance measured; then repeated with the tiller hydraulics deactivated. Nonconformance to 3.2.4.1.7, failure to switch the attachment within 30 minutes, to operate as prescribed herein; evidence of any deficiency, malfunction, leakage, or the need for service of any component shall constitute failure of this test.

4.5.7.8 Sprayer. The contractor shall demonstrate, or provide evidence of, the tractor sprayer's compatibility with caustic liquids, as specified. The sprayer shall be assembled and operated in accordance with the manufacturer's instructions, to verify compliance with the requirements in 3.2.4.1.8. If it is relocatable, this test shall be conducted with the spray bar at the rear of the tractor, in an area where its effluence can be (collected and) measured. The sprinkler system shall be filled with water, set to dispense at its lowest setting, allowed to dispense for one minute, and the effluent measured. Using the remaining water, nozzles shall be comparatively evaluated for flow variance greater than 10 percent. Individual containers shall be placed under each nozzle and the quick shutoff used to start and stop flow not less than three times. The first portion of the test shall be repeated, set to dispense at its highest setting, allowed to dispense until the tank is empty, with the time carefully monitored, and the rate of effluence extrapolated. The accuracy of the flow meter and volumeter shall also be assessed. Nonconformance to 3.2.4.1.8, failure to switch the attachment within 30 minutes, to operate as prescribed herein;

evidence of any deficiency, malfunction, leakage, or the need for service of any component shall constitute failure of this test.

4.5.7.9 Backhoe performance. The tractor backhoe shall be assembled and operated in accordance with the manufacturer's instructions, to verify compliance with the requirements in 3.2.4.2.1 and 3.3.5.3. This testing may be accomplished during reliability testing specified in 4.5.13.3. It shall be tested with both buckets: the standard in a clay loam (SM soil), the ripper bucket in sand with silt and gravel (SW-SM soil), each an undisturbed area twice the width of the tractor and 1000 feet long. The tractor backhoe shall be tested for conformance to the minimum performance requirements for digging depth, loading height, digging force of bucket and dipper-stick cylinders, dipper-stick and boom lift capacities, swing arc, and bucket capacity. Nonconformance to the requirements of 3.2.4.2.1 or 3.3.5.3, failure to switch the attachment within 30 minutes, to operate as prescribed herein; evidence of any deficiency, malfunction, leakage, or the need for service of any component shall constitute failure of this test.

4.5.7.10 Reserved.

4.5.7.11 Auger. The contractor shall demonstrate, or provide evidence of, the auger's compliance with minimum requirements for the operating speed and developed torque specified. The tractor auger shall be assembled and operated in accordance with the manufacturer's instructions, to verify compliance with the requirements in 3.2.4.2.4 and 3.3.5.5. It shall be tested in a clay gravel with sand mix (GC soil), on a 20 degree slope, to bore perpendicular holes. Each bit supplied with the auger shall be used to drill not less than ten holes. The auger shall be tested for conformance to the minimum performance requirements for bore diameter, depth, and rate. Nonconformance to the requirements of 3.2.4.2.4 or 3.3.5.5, failure to switch the attachment within 30 minutes, to operate as prescribed herein; evidence of any deficiency, malfunction, leakage, or need for service of any component shall constitute failure of this test.

4.5.7.12 Reserved.

4.5.7.13 Tamper/compactor. The contractor shall demonstrate, or provide evidence of, the tamper's compliance with minimum requirements for the developed force and rate of delivery specified. The compactor shall be assembled and operated in accordance with the manufacturer's instructions, to verify compliance with the requirements in 3.2.4.2.6. It shall be tested in a clay loam (SM soil), naturally unsettled, or plowed to maximum depth by the roto-tiller. The test shall tamp 4x4-foot areas, in a 1000 square foot area, and a comparison to the surrounding areas made for compaction to not greater than 60 percent, of the aerated mass, approximated by observation. During testing, the tamper shall be stopped on a down-stroke, its hydraulics deactivated, and an attempt made to raise it clear of the surface, or disassemble and remove it by just one person. Nonconformance to the requirements of 3.2.4.2.6, failure to switch the attachment within 30 minutes, to operate as prescribed herein; evidence of any deficiency, malfunction, leakage, or need for service of any component shall constitute failure of this test.

4.5.7.14 Rock/pavement breaker. The contractor shall demonstrate, or provide evidence of, the hammer's compliance with the minimum parameters for performance, as specified. Additionally, to demonstrate its suitability to the task, the hammer shall be tested with each of its

attachments for not less than one hour. The spade shall be used to break up compacted clay, the Moil point on rock, and the chisel point on concrete, operated at angles up to 75 degrees from perpendicular. Nonconformance to 3.2.4.3.1, or any major failure (see 6.8.10) shall constitute failure of this test.

4.5.7.15 Hammer/impact tool. The contractor shall demonstrate, or provide evidence of, the hammer's compliance with minimum parameters for performance, as specified. Additionally, to demonstrate its suitability to the task, the hammer shall be tested with each of its attachments for not less than one hour. Each of the bits shall be used to bore not less than 10 holes in rock and in concrete. Nonconformance to 3.2.4.3.2, any major failure (see 6.8.10), or the inability to bore clean, accurate holes to the optimum depth in each material within the hour shall constitute failure of this test.

4.5.7.16 Rock breaker. The contractor shall demonstrate, or provide evidence of, the rock breaker's compliance with minimum parameters for performance, as specified. Additionally, to demonstrate its suitability to the task, the hammer shall be tested with each of its attachments for not less than one hour. Nonconformance to 3.2.4.2.7 or any major failure (see 6.8.10) shall constitute failure of this test.

4.5.7.17 Impact wrench. The contractor shall demonstrate, or provide evidence of, the wrench's compliance with minimum parameters for performance, as specified. Additionally, to demonstrate its suitability to the task, the wrench shall be tested either in completely removing and replacing the tractor's ROPS/FOPS provisions in not greater than 60 minutes, by a team of three workers, or some other Government approved method. Nonconformance to 3.2.4.3.4, any major failure (see 6.8.10), or the inability to complete the task as described shall constitute failure of this test.

4.5.7.18 Chain saw. The contractor shall demonstrate, or provide evidence of, the saw's compliance with minimum parameters for performance, as specified. Additionally, to demonstrate its suitability to the task, the saw shall be tested by making not less than 50 cuts through hardwood timber, an average of 10.00 to 15.00 inches in diameter. Nonconformance to 3.2.4.3.5, any major failure (see 6.8.10), or the inability to complete the task as described shall constitute failure of this test.

4.5.7.19 Post driver. The contractor shall demonstrate, or provide evidence of, the post driver's compliance with the minimum parameters for performance, as specified. Additionally, to demonstrate its suitability to the task, the post driver shall be tested by driving "U" channel, round and square posts for not less than one hour. Nonconformance to 3.2.4.3.3 or any major failure (see 6.8.10) shall constitute failure of this test.

4.5.8 Mobility. To verify compliance with the mobility requirements herein, the tractor shall be evaluated over a course to be selected by the government. Nonconformance to 3.3.2 shall constitute failure of this test.

4.5.8.1 Gradeability. The tractor, in its travel mode, shall be driven forward up a 30 percent grade, off-road, brought to a stop, and remain in that attitude for not less than one

minute. The process shall be repeated with the tractor negotiating the slope in reverse. The tractor, in operational mode and with front bucket loaded to rated capacity, shall be driven forward up an off-road 60 percent grade. The tractor shall make not less than two stops and continue up the grade, then be brought to a stop and remain in that attitude for not less than one minute. The process shall be repeated with the tractor negotiating the slope in reverse. Then the tractor shall be driven across a 30 percent off-road side slope, stopped and turned to face uphill, and held in that attitude for not less than thirty seconds. The tractor shall be turned back to the original direction, continue, stopped and turned to face downhill, and held in that attitude for not less than thirty seconds. The tractor shall then be turned back towards its point of origin, and the process repeated going in that direction. Finally, the tractor's angles of approach and departure shall be measured; and the tractor, in its travel mode, shall negotiate an 18-inch vertical step, in forward and reverse, without the assistance of the attachments or stabilizers. Nonconformance to 3.3.2.1 shall constitute failure of this test.

4.5.8.2 Fording. Samples shall be taken from all lubricants that circulate below the fording line, and analyzed for water content, prior to the test. The tractor shall be operated to bring it to normal fluid operating pressures and temperature, then driven into a hard-bottom, water crossing to a depth of 40 inches. Keeping it submersed to that level, the tractor shall be driven in forward and reverse, for 15 minutes, at speeds not less than 5 mph nor greater than 15 mph. The tractor shall then be driven from the water and operated on land, in high gear, for 15 minutes. This test cycle shall be repeated five times; with the engine being stopped and restarted in the water, not less than twice, during the last cycle. After, the tractor shall be parked for one hour, then samples taken from the same lubricants and analyzed. Nonconformance to the requirements of 3.3.2.2 or failure to operate as prescribed herein shall constitute failure of this test.

4.5.8.3 Travel speed. The tractor's speed shall be determined by a fifth wheel or other system independent of the tractor. The tractor, with front-end loader loaded with all required BII, spare wheel/tire ensemble, and associated mounting/stowage provisions, shall be driven on a level, dry, class I road at its maximum sustainable, safe speed for a period of not less than 30 minutes. This shall be repeated on a dry, class I road with a 3 percent grade; and on a cross-country tract. The tractor, towing a 10,000-pound pneumatic tired trailer, shall be driven on a dry, class I road with a 3 percent grade, at its maximum sustainable, safe speed for a period of not less than 30 minutes. This test shall be replicated on a 30 percent grade, for a distance of not less than 1,000 feet. Off-road, the tractor shall tow the same trailer a distance of not less than 2600 feet, along a 20 percent side slope. Nonconformance to the requirements of 3.3.2.3 shall constitute failure of this test.

4.5.8.3.1 Reserve tractive ability. The reserve tractive ability of the tractor shall be tested in accordance with ISO 7464. Nonconformance to 3.3.2.3.1 shall constitute failure of this test.

4.5.8.3.2 Ride quality. The ride quality shall be measured IAW SAE J1013_200711. Nonconformance to 3.3.2.4 shall constitute failure of this test.

4.5.9 Stability. The tractor shall be tested to demonstrate the functional stability defined in 3.3.3.1, 3.3.3.2, 3.3.3.3, 3.3.3.4, and 3.3.3.5. Nonconformance to the requirements of 3.3.3,

failure to operate as prescribed herein; evidence of any deficiency, malfunction, or leakage, loose or disassembled parts, or the need for service of any component shall constitute failure of this test.

4.5.10 Transportability. The tractor shall be inspected for adequate provisions and conformance to required dimensional limitations for transport by rail, in C130 aircraft, and under CH-47 helicopters. If it is necessary to disassemble the tractor for transport, the time to disassemble and reassemble shall be monitored. The tractor(s) shall be loaded onto aircraft and normal, and airdrop delivery (per MIL-HDBK-669) simulated. The tractor shall be attached to rotary-wing aircraft, in single- or dual-sortie configuration as appropriate, and delivery simulated. After testing in each mode of transportation, the tractor shall be tested in accordance with 4.5.1.3. In addition, nonconformance to 3.4.1, 3.4.3, or 3.4.3.3 shall also constitute failure of this test.

4.5.10.1 Slinging provisions. Slinging provisions shall be tested in accordance MIL-STD-209. Nonconformance to 3.4.3.1, evidence of deteriorating welds; or stress-fatigued, permanently deformed, cracked, broken, or loose provisions or structural components shall constitute failure of this test.

4.5.10.2 Tie-down provisions. Tie-down provisions shall be tested in accordance MIL-STD-209 and MIL-STD-814, as applicable. Nonconformance to 3.4.3.2, evidence of deteriorating welds; or stress fatigued, permanently deformed, cracked, broken, or loose provisions or structural components shall constitute failure of this test.

4.5.10.3 Rail transport test. The tractor shall be tested in accordance with 4.5.10.1 and 4.5.10.2 prior to the rail impact test. To determine conformance to 3.4.3 and 3.4.3.4, the tractor shall be inspected for agreement with the dimensions of the AAR and GIC diagrams, and shall be subjected to the rail impact test. This test shall be conducted by mounting the tractor on a rail car in its rail shipment configuration and then performing a series of at least four impacts. The first three impacts shall be at 6.4, 9.7, and 13 km/h (4, 6, and 8 mph), respectively, in the same direction. The fourth shall be conducted at 13 km/h (8 mph) in the reverse direction. All four impacts shall have a tolerance of +0.8, -0.0 km/h. After each impact, the tractor shall be inspected for spillage of lubricants, fuel, water and structural damage. Electrical shorts and normal operations and performance shall be checked and tested following the completion of the test. Performance degradation or permanent deformation of any part is considered a deficiency and a failure. Spillage of lubricants, fuel or water; structural damage; or electrical shorts shall also constitute failure of this test.

4.5.10.4 Marine transportability. The capability of the tractor to be transported on Marine vessels as required, shall be certified by the contractor, in accordance with MIL-STD-1366, to prove conformance with 3.4.3.5. Inability to meet the requirements of 3.4.3.5 shall constitute failure of this test.

4.5.11 Environmental.

4.5.11.1 High temperature. The tractor shall be stored at a temperature of 160 °F, for not less than 24 hours; then the temperature lowered to 120 °F. After unit temperature stabilization at

120°F, the tractor shall be started and operated at rated capacity for not less than 3 hours. Nonconformance to 3.5.1 and 3.5.2 shall constitute failure of this test.

4.5.11.2 Low temperature. The tractor shall be stored at a temperature of -50 °F for not less than 24 hours; then the temperature shall be raised to -25 °F. After unit temperature stabilization, the tractor shall be started and operated at rated capacity for not less than 3 hours. Nonconformance to 3.5.1 and 3.5.2 shall constitute failure of this test.

4.5.11.2.1 Arctic cold weather kit. When procured with the Arctic Cold Weather kit, the tractor shall instead be stored at a temperature of -50°F for not less than 24 hours. After unit temperature stabilization, the kit provisions shall be implemented, and the tractor started and operated at rated capacity for not less than 3 hours. Nonconformance to 3.3.1.2, any mechanical or electrical failure, or performance degradation shall constitute failure of this test. The defroster and cab heater shall be tested in accordance with SAE J381 and SAE J1503.

4.5.11.3 Reserved.

4.5.11.4 Reserved.

4.5.11.5 Rain. The tractor, in its transport configuration, shall be placed in an environmental control test facility simulating falling rain at a rate not less than 4 in/hr and a wind velocity greater than 30 mph. The chamber temperature need not be controlled but the water temperature shall be maintained at 10°F less than that of the tractor. The rain droplets shall have a diametral range, predominantly, between 0.08 and 0.20 inches. The rain shall be dispersed completely over the tractor, beating directly and uniformly against each side for not less than 10 minutes, with variations up to 45° from the horizontal. The tractor shall be checked for water intrusion, internally, then started. Failure to operate as prescribed herein, nonconformance to 3.5.5 or 3.2.3.1.6, or any accumulation of water greater than 0.15 ounce shall constitute failure of this test.

4.5.11.6 Fungus. Following the tractor examinations of 4.4, any components showing evidence of, or susceptibility to fungus, shall be tested. Test procedures shall be as specified in MIL-STD- 810, Method 508.5, using the standard (5) species of fungi, to test configuration (2), for a duration of 28 days. Nonconformance to 3.5.6 shall constitute failure of this test.

4.5.11.7 Sand/dust. The tractor shall be tested for 12 hours, using the sand and dust composition and particle size distribution specified in 4.5.11.7.1. Concentrations shall be maintained at 1.32 ± 0.66 ounce per cubic foot and the air velocity regulated from 300 ft/min to 1750 ft/min. The first portion of the test shall be conducted, with the tractor in its transport configuration, for 6 hours at +160 ±5 °F. The tractor shall be operated during the second 6-hour portion of the test, which shall be conducted at 73 ±5 °F. Relative humidity shall be controlled, to less than 30 percent throughout the test. The temperature of the tractor shall be returned to ambient and the tractor shall be tested as defined in 4.5.1.3. Nonconformance to 3.5.7 shall constitute failure of this test. It shall also be examined for these additional defects, any of which shall also constitute failure of this test:

a. Penetration of seals.

b. Clogging of openings and filters.
c. Contamination of hydraulic fluid.

4.5.11.7.1 Sand and dust composition. Sand and dust used in testing shall be composed of 97 to 99 percent (by weight) silicon dioxide (SiO_2). The following particle size distribution shall be used to produce silica flour for the sand and dust testing:

100%	shall pass through a 100-mesh screen.
98 ±2%	shall pass through a 140-mesh screen.
90 ±2%	shall pass through a 200-mesh screen.
75 ±2%	shall pass through a 325-mesh screen.

4.5.11.8 Reserved.

4.5.12 Maintainability. Provisions for inspection, adjustment, servicing, and replacement of components shall all be evaluated. Nonconformance to 3.6.1, to include subparagraphs, or any malfunction reported by the test set that reduce the sufficiency of the unit shall constitute failure of this test.

4.5.13 Reliability. The unit(s) shall be of configurations that include the attachments in the subordinate paragraphs, and satisfy the parameters therein. Test duration shall be a minimum of 160 hours per unit, and include testing of all essential functions (see 6.8.7). Time apportioned for each shall be not less than:

Loader	45 percent
Backhoe	35 percent
Forklift	5 percent
Travel	12-1/2 percent
Blackout	2-1/2 percent

Time accrued in other testing may be counted toward fulfilling this requirement, so long as conditions specified here are met. Any failure experienced during this testing shall be used to evaluate MTTR. Blackout conditions verification shall be accomplished in the middle and end of testing. Two occurrences of the same failure or nonconformance to 3.6.2 shall constitute failure of this test.

4.5.13.1 Loader reliability. The loader shall be tested as follows to determine reliability while excavating and handling soils.

a. Seventy percent of test hours per tractor shall be digging pits 100 × 8 × 1-1/2 (d) feet in undisturbed soil.
b. Ten percent of the test hours per tractor shall be loading dump trucks, having a sideboard height not less than 86.00 inches above the ground, with bank run gravel or sand.
c. Ten percent of the test hours per tractor shall be moving stockpiles of bank run gravel or sand, in capacity loads, a distance of not less than 100 feet over an improved surface.
d. Ten percent of the test hours per tractor shall be backfilling trenches dug during the backhoe reliability testing.

4.5.13.2 Forklift reliability. The forklift attachment shall be tested by simulating loading and unloading palletized cargo weighing 4000 pounds for 70 percent of the hours specified, on an improved level surface. Palletized loads of 4000 pounds shall be carried over an improved surface for the remaining hours.

4.5.13.3 Backhoe reliability. The excavating reliability of the tractor using the backhoe shall be demonstrated by digging trenches in undisturbed soil at maximum depth, one bucket-width wide, and not less than 25 feet long. The backhoe shall maintain a production rate of not less than 27 cubic yards per hour in clay-loam or clay-gravel (class GM and SM) soil.

4.5.13.4 Reserved.

4.5.13.5 Travel mode reliability. The front-end loader will be loaded with all required BII, spare wheel/tire ensemble, and associated mounting/stowage provision during all travel mode testing. Travel mode reliability testing shall be conducted as follows, for each tractor tested; 15 percent of hours traveling over primary roads, 15 percent of hours over secondary roads, 35 percent of hours over a level cross-country course, and 35 percent of hours over a hilly cross-country course. Failure to meet the requirement of 3.3.2.4 shall also constitute failure of this test.

4.5.14 Survivability. The contractor shall demonstrate, to the satisfaction of the contracting officer, that the tractor meets minimum requirements for attaching armor, and withstanding rapid decompression, NBC contamination and clean-up. Nonconformance to 3.6.3, to include subparagraphs, shall constitute failure of this test.

4.5.14.1 Electromagnetic environmental effects (E3). Compliance to MIL-STD-464 and MIL-STD-461 shall be verified by testing, analyses, and/or conformity to applicable subtests. Nonconformance to the requirements of 3.6.3.1 and sub-paragraphs shall constitute failure of this test.

4.5.15 Human factors. In addition to the human factors evaluation cited in 4.5.1.2 the tractor shall be inspected for the following. Access provisions shall be measured to determine conformance to SAE J185 and SAE J925_199306, workspace dimensions shall be measured to determine conformance to ISO 3411 and displays and controls evaluated to determine conformance to SAE J680 and ISO 6682. Nonconformance to 3.6.5 or the human factors considerations of 3.2.3.6 shall constitute failure of this test.

4.5.15.1 Noise level. Noise levels shall be measured in accordance with procedures in SAE J1074, with the tractor operating under full load. The noise levels shall be measured at not less than 12 equidistant points around the tractor, and the operators' positions. Noise levels shall be reported as a (weighted) dB(A) level. Interior noise levels shall not exceed the requirements of 3.6.5.3 when tested IAW SAE J1166 and SAE J336, except readings shall be taken at two-thirds the engine speed with the transmission in the highest gear. Nonconformance to 3.6.5.3 shall constitute failure of this test.

4.5.15.2 Whole body vibration. Whole body vibration shall be tested in accordance with SAE J1013_200711.

4.5.16 Safety. In addition to the evaluation cited in 4.5.1.2 the tractor and attachments shall be inspected for compliance to specific safety requirements, to include marking, as appropriate. Nonconformance to 3.6.5.5, to include subparagraphs; caution marking requirement of 3.6.6.2; or any hazard observed during any testing shall constitute failure of this test.

5. PACKAGING.

5.1 Packaging. For acquisition purposes, the packaging requirements shall be as specified in the contract or order (see 6.2).

6. NOTES.

(This section contains information of a general or explanatory nature, which may be helpful but is not mandatory.)

6.1 Intended use. The tractors are intended to be used by engineer units, and selected Ordnance and Quartermaster units, to execute a variety of mobility, countermobility, general engineering, and survivability missions. They will be utilized in all combat environments, supporting missions requiring digging, lifting, trenching, loading, and light lifting capabilities. When equipped with various hydraulic attachments, the tractors can also provide combat deployed units a variety of repair and area clearing (debris, snow, etc.) capabilities.

6.2 Acquisition requirements. Acquisition documents must specify the following:

a. Title, number, and date of this specification.
b. Type of tractor required (see 1.2)
c. Types and quantities of attachments and tools required (see 3.2.4).
d. Issue of DoDISS to be cited in the solicitation and, if required, the specific issue of individual documents referenced (see 2.2 and 2.3).
e. When a first article is required for inspection and approval, time frame for submission, and the number of units required (see 3.1).
f. Finish color requirement (see 3.2.1.5).
g. When a camouflage pattern is to be applied over the finish coat (see 3.2.1.5.1)
h. When an Arctic Cold Weather kit is required (see 3.3.1.2)
i. When current ARMY TMDE (WATS) will not be supplied to the contractor (see 3.2.3.4.8)
j. When a SINCGARS radio set will not be supplied to the contractor (see 3.4.4)
k. When an NBC ensemble will not be supplied to the contractor (see 3.6.5.1)
l. Nomenclature, assigned weight classification number and instructions (see 3.6.6.1)
m. When testing facilities will be stipulated by the government (see 4.5.1)
n. Packaging requirements (see 5.1)

6.3 First article. When a first article inspection is required, each item to be tested should be a first article production unit. The sample should consist of one or more tractors, as specified (see 6.2). The contracting officer should include specific instructions in acquisition documents regarding arrangements for examinations, tests, approval, and disposal of the sample (see 4.2). Invitation for bids should provide that the Government reserves the right to waive the requirement for samples for first article inspection to those bidders offering a product that has been previously acquired or tested by the Government, and that bidders offering such products, who wish to rely on such production or test, must furnish evidence with the bid that prior Government approval is appropriate for the pending contract.

6.4 Reserved.

6.5 Camouflage pattern data. The contracting officer will arrange for submission of outline drawings from the contractor; and subsequently provide the contractor with pertinent data, to include camouflage pattern drawings and Data Item Descriptions, as applicable (see 3.2.1.5.1).

6.6 Government loaned equipment. When applicable (see 6.2.1), the contracting officer should arrange to furnish the contractor the property specified in 3.4.4. Arrangements should also be made to provide documentation on, or make available for inspection, vehicles identified in 3.4.3.

6.7 Metric products. Products manufactured to metric dimensions will be considered on an equal basis with those manufactured using inch-pound units. They will be accepted at the contracting officer's option, providing measurements fall within specified tolerances, using the conversion tables in FED-STD-376; and all other requirements of this specification are met.

6.8 Definitions. For the purposes of this specification, these subordinate definitions apply.

6.8.1 Recovered materials. Recovered materials are those materials that have been collected from solid waste and reprocessed to become a source of raw materials, as distinguished from virgin raw materials.

6.8.2 Dissimilar metals. Metals are considered dissimilar when two specimens in contact with each other promote accelerated galvanic corrosion.

6.8.3 Interchangeable. Interchangeable parts are defined as two or more parts possessing such functional and physical characteristics as to be equivalent in performance and durability, and capable of being exchanged one for the other without alteration of the parts, of mating or adjoining parts, except for adjustment, and without selection for fit or performance.

6.8.4 Fungus-inert. A material that is not a nutrient to fungi is considered fungus-inert.

6.8.5 Pothole. For the purposes of this specification, a pothole is a hole in pavement of sufficient size to envelop the vehicle tire, width and chord to the depth specified.

6.8.6 Reserved.

6.8.7 Essential functions. For the purposes of this specification, the tractor's essential function include both on- and off-road operation of the tractor; operation of front and rear attachments; and blackout capability.

6.8.8 Uncontrolled safety hazard. Uncontrolled safety hazards may be interpreted as defined in MIL-HDBK-454, Guideline 1, Safety Design Criteria-Personnel Hazards.

6.8.9 Minor failure. A minor failure is defined as any malfunction that can be corrected within 30 minutes by adjustment, repair, or replacement using controls and on-equipment tools or parts.

6.8.10 Major failure. A major failure is defined as any malfunction that cannot be corrected within 30 minutes by adjustment, repair, or replacement, using controls and on-equipment tools or parts, and is a malfunction that causes or may cause one or more of the following:

a. Failure to commence operation
b. Cessation of operation
c. Degradation of performance below the designated levels
d. Damage to the system if operation is continued.
e. Personnel safety hazards.

6.9 Identification of changes. Marginal notations are not used in this revision to identify changes with respect to the previous issue, due to the extent of the changes.

DRAFT

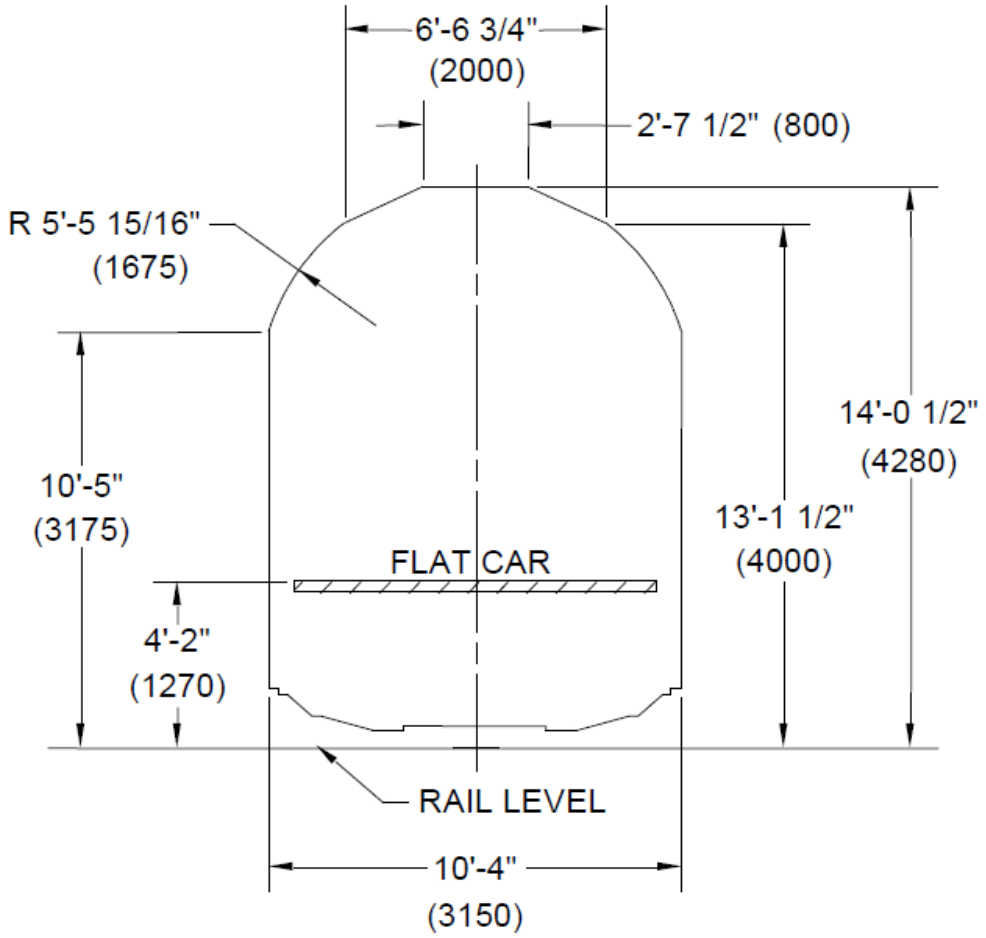

NOTE:
DIMENSIONS IN INCHES (MILLIMETERS).

FIGURE 1. Gabarit International de Chargement (GIC) clearance dimensions.

Custodian:

Army-AT

Preparing activity:

Army-AT

Review Activities:

Air Force-99
Navy-YD
DLA-IS

(Project 2420 -0031)