STATEMENT OF WORK

FOR

COMBINED F-84F THUNDERSTREAK / RB-66B DESTROYER PAINT SERVICES (UFR)

AT

DYESS AFB, TX

07/02/2026

F-84F THUNDERSTREAK / RB-66B DESTROYER PAINT SERVICES

Table of Contents

1.0 SECTION I: DESCRIPTION OF SERVICES
1.1 General Scope
1.2 Background
1.3 Inherently Governmental Function
1.4 Place of Performance
1.5 Specific Tasks
1.6 Historical Data
1.7 Deliverables
1.8 Inspection/Acceptance
1.9 Government Furnished Property and Services

2.0 SECTION II: GENERAL INFORMATION
2.1 Hours of Operation
2.2 Contractor Personnel
2.3 Continuation of Essential DoD Contractor Services During Crisis
2.4 Conservation of Utilities
2.5 Environmental Protection
2.6 Miscellaneous Paragraph
2.7 Security
2.8 Safety

3.0 SECTION III APPENDICES & EXHIBITS
APPENDIX 1 Definitions, Abbreviations, and Acronyms
APPENDIX 2 F-84F Thunderstreak Colors, Markings, & Insignia (CMI) Package
APPENDIX 3 RB-66B Destroyer CMI Package

SECTION I

1.0 DESCRIPTION OF SERVICES

1.1 **General Scope.** This is a non-personnel services contract to provide F-84F Thunderstreak and RB-66B Destroyer paint services. The government shall not exercise any supervision or control over the contract service providers performing the services herein. Such contract service providers shall be accountable solely to the contractor who, in turn is responsible to the government.

1.1.1 Description of Services/Objectives. The contractor shall provide all management, personnel, equipment, supplies, facilities, transportation, tools, materials, supervision, and other items and non-personal services necessary to perform F-84F Thunderstreak and RB-66B Destroyer painting services as defined in this Statement of Work (SOW). The contractor shall perform to the standards in this contract. This includes the planning, coordination, and surveillance of the activities necessary to ensure disciplined work performance and timely resources application to accomplish all tasks under the contract.

1.2 **Background.** The F-84F (51-9364) Thunderstreak was manufactured by Republic Aviation and delivered to the United States Air Force (USAF) in 1951. She served in numerous commands throughout her career in the Strategic Air Command, Air National Guard and Tactical Air Command. Upon retirement from flying in the late 1960's or early 70s, she was put on static display at American Legion Post in St. Hedwig, Texas Near Randolph AFB. After years a fending off vandals and scrappers, who stole some of her original panels and windows, the American Legion made it available to Dyess AFB for use in the Texas Museum of Military History in 1981. She made her final move to the Dyess AFB on a flatbed truck with her wings removed. She was originally placed in front of the 463d AMS building where restoration work was carried out. In 1991 she was finally moved to her current location in the Dyess Linear Air Park. Originally in South-East Asia camouflage, she was transitioned in the 1990s to a classic metallic paint scheme. The aircraft had her last paint touch-up in August of 2022 when her fuselage roundels were sanded down, corrosion was abated and the stars were repainted. This aircraft's last full paint job in 2014. The base curator has performed annual cleanings of this aircraft since, but the paint has begun to fade to a noticeably since, especially the red. With 35 aircraft the base curator needs to contract some of the aircraft out in order to get the airpark looking as it should within the required time frame.

1.2.1 The RB-66B (53-0466) Destroyer was manufactured by Douglas Aircraft and delivered to the United States Air Force (USAF) on 26 June 1956. She served mostly at Shaw AFB, SC, but had a few deployments to Langley AFB and Yokota, Japan all under the Tactical Air Command. Upon retirement from flying in the late 1970, she was put in storage at the Boneyard at Davis-Monthan AFB in Arizona. At an unknown point, the aircraft was taken out of the boneyard and placed on static display at Bergstrom AFB, TX. In 1993 Bergstrom AFB was closed as part of the Base Reallignment and closure (BRAC) program to reduce the size of the military. This closure left the RB-66B Destroyer orphaned. The B-66 Destroyer Association requested the aircraft be moved rather than scrapped because this was one of only seven B-66's known to exist in the world today. In August 1993 the aircraft arrived at Dyess AFB for static display on the back of a semi-truck. She was initially displayed in the northern gate guard position. Eventually she was moved into the woods as there was no place to display her. Around 2012 she was moved to a back lot where she was sanded down, and primed. In 2014 she was towed up to her current display location and put on stands where she remains today. After moving to this site, she was painted using cheap house paints that faded quickly.

1.3 **Inherently Governmental Function.** The contractor shall not perform inherently governmental functions as defined in FAR Subpart 7.5 in relationship to this SOW.

1.4 **Place of Performance.** The contractor shall perform the services in the SOW at Dyess Air Force Base, Texas.

1.5. **Specific Tasks.**

1.5.1 The contractor shall provide all personnel safety gear, equipment, tools, materials, supervision and transportation IAW DAFMAN 91-203. A chemical inventory list (attachment 1) with SDS for each item, shall be approved prior to use by HAZMAT Program Manager, and readily available to all contract personnel.

1.5.2. The contractor shall fully scuff sand the parts of the aircraft designated in the CMI Package (Appendix 2 & 3).

1.5.3. In the event corrosion is discovered under the existing paint, the contractor shall sand down or wire wheel the area to bare metal, feathering down the paint edges. Chemically treat the area free of corrosion, repair said corrosion using a filler compound, and patch minor surface punctures or tears. Contractor shall spot prime any bare metal surfaces.

1.5.4 The contractor shall perform limited disassembly of the aircraft and components in an effort to locate and remove all areas of external corrosion. The contractor shall ensure the aircraft is clean and free from dirt, debris, and contaminants. The contractor shall perform corrosion treatment to all external surfaces, reassemble all components and items, and apply final chemical coating treatment to prevent corrosion from spreading.

1.5.5 The contractor shall match the CMI Package, Appendix 2 & 3, and use the paint colors using the Federal Standard 595 color scale. The contractor shall purchase adequate amounts of paint to comply with the requirements of this SOW.

1.5.6. The contractor shall remove all bird and insect nests.

1.5.7. Before painting, the contractor shall completely scuff-sand the entire exterior surface area that is to be repainted, using abrasive paper no coarser than 150 grit. Scuff sanding shall include roughing up 100% of the painted surface, removal of oxidized paint, and featheredging of all flaked paint. It is not intended to remove a sound paint layer. The contractor shall not sand through to bare metal except in cases of sub-paint corrosion. Sanding shall be accomplished using a HEPA filtration sanding system or wire brush scuffing.

1.5.8. The contractor shall apply primer to the thickness recommended to bare portions of the aircraft designated in the CMI Package to be painted IAW the paint manufacturer and allow it to dry as specified by the paint manufacturer's specifications.

1.5.9. After priming, the contractor shall wipe down the primed aircraft portions with isopropyl alcohol. The solvent used during the wipe down operation shall not be allowed to evaporate from the surface; but shall be wiped from the surface with a dry, clean cloth.

1.5.10. The contractor shall apply topcoats of the appropriate "GLOSS" paints to the areas designated in the CMI Package to the thickness recommended by the paint manufacturer and allow it to dry as specified by the paint manufacturer's specification. After the topcoat is dry, the contractor shall wipe down the aircraft with any solvent which is recommended by the paint manufacturer. The solvent used during the wipe down operation shall not be allowed to evaporate from the surface; but shall be wiped from the surface with a dry, clean cloth. This requirement includes the application of aircraft markings in the CMI Package (Appendix 2 & 3).

1.5.11. The contractor shall warranty and ensure the applied coatings shall not flake, peel, or crack for two (2) years from the date the contract is completed. Paint shall be smooth, uniform and free of blisters, cracks, loosely

adherent particles, nodules, or powdery deposits. No primer shall be visible through top-coat; there shall be no overspray, blisters, fish eyes, runs or sags, roughness or dirt inclusions. After completion of painting and repairs, all aircraft detail markings shall be applied IAW the CMI Package, Appendix 2. No decals or vinyl are to be used for any color, markings, or indicators unless authorized by the contracting officer (CO).

1.5.12. The contractor shall verify and install all vents, wheel wells, flap openings, elevator openings, rudder openings, cowling openings, cowl flap areas, intakes, air scoops, exhausts ducts, and the crest of the tail with bird and/or insect proofing. Further, if the above items are not covered and/or the current covering does not meet the intent to bird or insect proof, the contractor shall repair/replace any necessary items to ensure this standard is met.

1.5.13. The contractor shall inspect and clean all water drain holes to allow for proper drainage.

1.5.14. The contractor shall remove all areas of corrosion, from the aircraft pedestal mounts. Treat these areas with primer and gloss black paint.

1.5.15. The contractor shall remove all paint, or other finish material where it has spilled or spattered. All paint scrapings, trash, old paint, and all debris shall be removed daily from site. All debris shall be containerized for proper removal and disposal. The contractor shall ensure the work area is completely free of debris prior to the end of the period of performance.

1.5.16. The contractor is responsible for the proper collection, handling, and disposal of all waste generated during performance of this work in accordance with all Federal and State regulations.

1.5.17. The contractor shall smooth out and remove any rut marks in the rocks around the aircraft caused by service vehicles.

1.5.18. The contractor shall notify the government Point of Contact (POC) at least 24 hours in advance of beginning work and within 24 hours of work completion.

1.5.19. The contractor shall be available for an inspection of the work by 7 CONS and the base curator.

1.5.20. The contractor shall remediate items on the inspection punch list.

1.5.21. Upon completion of the job, the contractor shall provide a letter of warranty to the base curator and 7 CONS as a matter of record.

1.6 **Historical Data.** The tasks described above has been successfully performed by an Air Force Tiger Team in 2014, using inferior paint stock.

1.7 **Deliverables.**

1.7.1 Below is a list of deliverables under this contract**.**

Support Area	Title	Delivery Date/Description
Hazmart	Chemical Inventory List	No later than 14 calendar days prior to contract start or prior to purchase of locally sourced paints.
Hazmart	Safety Data Sheets	No later than 14 calendar days prior to contract start or prior to purchase of locally sourced paints.
7 BW/CVM	On-Site Inspection Report	Weekly walkthrough inspection with Air Park Curator
7 BW/CVM	Rescheduled Hours	Submit in writing when delays caused by weather, scheduled ceremonies, government shutdown or base closure occur
Bio-environmental	Spray Paint Usage Spreadsheet	Submit monthly to record the amount of low-VOC paint sprayed.

1.8 **Inspection/Acceptance**. The government shall inspect and evaluate the contractors' performance to ensure services are received in accordance with requirements set forth in this contract. At that time, the Government will finalize all applicable acceptance documentation required to close out the project.

1.9 Government Furnished Property and Services

Emergency Medical Services. Dyess AFB will provide emergency medical services for contractor personnel in performance of services under this contract base IAW AFI 41-115 Chapter 1. The contractor shall reimburse the government for treatment provided at the current reimbursement rate for non-authorized user IAW AFH 41-114, paragraph 42. The contractor shall provide to the 7th Medical Group, the name of a physician and/or hospital to which injured personnel can be transferred for further treatment and care after receiving initial emergency treatment on base. All mishaps will be promptly reported to the base safety office through the Base Curator.

Security Police and Fire Protection. Phone number for 7th Security Forces Squadron (SFS), Fire Protection, 911. Contractor must tell the operator they are on Dyess AFB for 7 SFS or base fire dept. to respond.

1.9.1 **Government Furnished Facilities.** The government will provide food court dining, postal, and restroom facilities.

1.9.2 **Government Furnished Property (to include equipment and material).** The government will provide no equipment or material.

1.9.3 **Contractor Furnished Property and Services.** The contractor shall furnish everything required to perform this contract in accordance with all of its terms. The following mentioned requirements are not all inclusive of the contractor furnished items and services required in the performance of this contract.

SECTION II

2.0 GENERAL INFORMATION

2.1. **Hours of Operation.** The contractor shall perform the services required under this contract during hours of their own discretion, except Federal Holidays or when the government facility is closed due to local or national

emergencies, administrative closings, or similar government directed facility closings. For other than firm fixed price contracts, the contractor will not be reimbursed when the government facility is closed for the above reasons. On occasion, an employee will be required to work on weekends and Federal Holidays. The government will notify the contractor within 24 of such occurrences.

2.1.1 Recognized Holidays.

New Year's Day	Labor Day
Martin Luther King Jr.'s Birthday	Columbus Day
President's Day	Veteran's Day
Memorial Day	Thanksgiving Day
Juneteenth	Christmas Day
Independence Day	

*If the holiday falls on a Saturday, it will be observed on the preceding Friday. If the holiday falls on Sunday, it will be observed on the following Monday.

2.1.2 Government Shutdown. In the event of a government shutdown caused by lack of a budget or continuing resolution (CR) passed by Congress, all contract work shall cease until the budget or CR is passed unless funding used was obligated for the contract in the previous Fiscal Year.

2.2. **Contractor Personnel**

2.2.1. Contract Manager (CM). The contractor shall provide a contract manager and alternate(s) who are knowledgeable in aircraft restoration. The contractor shall submit the name, address, telephone number and a resume of the CM to the CO within 2 days of contract start date. The list shall be kept current throughout the life of the contract. The CM or alternate(s) shall have full authority to act for the contractor on all contract matters relating to daily operation of this contract. The CM or alternate(s) shall be available within 24 hours to meet on the installation with government personnel designated by the CO to discuss problem areas. The CM and alternate(s) shall be able to read, write, and speak English. The CM shall be able to effectively communicate with contractor employees. Qualifications for the CM are listed below: Contractor shall have a minimum of ten years of aircraft restoration experience. Contractor must have the ability to fabricate detailed stencils for the application of labeling and markings.

2.2.1.1. Personnel Roster. The contractor may be required to provide a personnel roster consisting of names and other pertinent personnel data to the requiring activity for the purposes of 100% accountability real-world and exercise situations. The personnel roster shall be updated as individuals are removed and added.

2.2.2. Contractor Employees:

Contractor Qualifications. The contractor shall utilize employees possessing adequate training, skills, and knowledge to perform the requirements of this contract.

2.2.3. Use of Government Employees.
The contractor shall not employ any person who is an employee of the U.S. Government if employing that person would create a conflict of interest. In addition, the contractor shall not employ any person who is an employee of the Department of the Defense if such employment would be contrary to the policies contained in AFI 64-106, Chapter 1, *Industrial Labor Relations Activities*.

2.2.3.1 Employment of Spouses/Dependents. The contractor shall not employ any person who is a spouse or dependent child of a Department of Defense employee (either military or civilian) when such employee would be placed in a conflict of interest or appearance of a conflict of interest by virtue of such employment.

2.2.3.2. Off-duty Military Personnel. The contractor is cautioned that off-duty active military personnel hired under this contract may be subject to permanent change of station, change in duty hours, or deployment. Military Reservists and National Guard members may be subject to reorder to active duty. The abrupt absence of these personnel could adversely affect the contractor's ability to perform. However, their absence at any time shall not constitute an excuse for nonperformance under this contract.

2.2.3.3. Identification of Contractor Employees. All contract personnel attending meetings, answering government telephones, and working in other situations where their contractor status is not obvious to third parties are required to identify themselves as such to avoid creating an impression in the minds of members of the public that they are government officials. They must also ensure that all documents or reports produced by contractors are suitably marked as contractor products or that contractor participation is appropriately disclosed. Contractors must have contractor badge on their person at all time while on base.

Organizational Conflict of Interest (OCI). Contractor and subcontractor personnel performing work under this contract may receive, have access to or participate in the development of proprietary or source selection information (e.g., cost or pricing information, budget information or analyses, specifications or work statements, etc.) or perform evaluation services which may create a current or subsequent OCI as defined in FAR Part 9.5. Any potential instance of OCI must be reported to the CO immediately.

Personal Conflict of Interest (PCI). The term "PCI" means that a contractor employee assigned to the contract has interests which (i) may diminish his/her capacity to give impartial, technically sound, objective assistance and advice in performing this contract, (ii) may otherwise result in a biased work product under this contract, or (iii) may result in an unfair competitive advantage. Any potential instance of PCI must be reported to the CO immediately.

Privately Owned Vehicles. Each contractor employee driving a privately owned vehicle on the installation must carry minimum liability insurance as required by the state. Contractor employees shall adhere to all posted speed limits and shall not use hand-held cellular telephones while driving on the installation for phone calls or texting. Use of seatbelts is mandatory. Any contractor employee cited for driving under the influence will have their driving privileges immediately revoked for a period to be determined.

2.3. **Continuation of Essential DoD Contractor Services During Crisis.**

In Accordance With DoDI 1100.22, (12 Apr 2010) Continuation of Essential DoD Contractor Services During Crises, DFARS 237.76, and the Air Force implementation thereof, unless otherwise directed by the CO, it is determined that the services as identified in this SOW ARE NOT essential for performance during a crisis.

Military Personnel. The government retains the option to assign military representatives on a full or part time basis at all contracted sites as deemed necessary for reasons, such as, to receive training, to assist in contingency efforts at site, or to evaluate site performance (not inclusive). The presence of military personnel shall in no way diminish the contractor’s responsibility to provide the operation services specified in this SOW.

Labor Disruptions. The government reserves the right to take over performance of this contract in the event of a labor strike, bankruptcy, default or period of non-performance by the contractor’s employees. In such events, the services will be performed exclusively by government personnel and not a mix of government and non-striking contractor employees. At the direction of the CO, the contractor agrees to remove its non-striking work force from the performance site and not interfere in any way with government performance. The contractor

further agrees, under such circumstances, to permit the government to use any essential contractor-furnished property. The government will not compensate the contractor for performance during this period.

2.4 **Conservation of Utilities.** The contractor shall instruct employees in utilities conservation practices. The contractor shall be responsible for operating under conditions that preclude the waste of utilities.

2.5 **Environmental Protection.** The contractor shall comply with all applicable federal, state and local laws, regulations and standards that are or may become applicable to contractor's activities in performance of this SOW.

2.5.1 Permits. The contractor shall be solely responsible for obtaining at its cost and expense any environmental permits required for its operations under the contract, independent of any existing permits held by the government. The contractor acknowledges that the government will not consent to being named a secondary discharger or co-permittee for any operations or activities of the contractor under the contract. In the event the government is named as a secondary discharger or co-permittee for any activity or operation of the contract, the government shall have the right to take reasonable actions necessary to prevent, suspend, or terminate such activity or operations, including terminating this contract, without liability or penalty.

2.5.2 Right to Inspect. The government's rights under this contract specifically include the right for government officials to inspect upon reasonable notice the work site for compliance with environmental, safety and occupational health laws and regulations, whether or not governmental is responsible for enforcing them. Such inspections are without prejudice to the right of duly constituted enforcement officials to make sure inspections. The government normally will give the contractor 24 hours prior notice of its intention to inspect, unless it determines the entry is required for safety, environmental, operations or security purposes.

2.5.3 Non-compliance. If the contractor is found to not be in compliance with any of these regulations, there may be cause for the facility to shut down until the contractor, when within the contractor's control or the government, has remedied the problem. Any sanitary deficiencies shall require immediate correction.

2.5.4 Spill Response. The contractor is responsible to report and promptly clean up all spills in a manner consistent with current environmental regulations. In the event that it is necessary to utilize government material, equipment, or personnel to clean up a contractor caused spill, the contractor shall be required to reimburse the government for all associated costs.

2.5.5 Audit. This contract may be subject to audit by any and all cognizant government agencies. The contractor shall make available all records, which it maintains with respect to these contract, to such agencies.

2.5.6 Failure to Insist On Compliance. The failure of government to insist, in any one or more instances, upon performance of any of the terms, covenants or conditions of this contract shall not be construed as a waiver or relinquishment of government's right to the future performance of any such terms, covenants or conditions and the contractor's obligations in respect to such future performance shall continue in full force and effect.

2.5.7 Green Procurement Program (GPP). The GPP is mandatory federal acquisition program that focuses on the purchase and use of environmentally preferable products and services. Many different items are covered by the GPP. Recycled-content products are designated by the Environmental Protection Agency (EPA). "Bio-based" products made from renewable plant materials are designated by the United States Department of Agriculture (USDA). Energy and water efficient products are designated by the Department of Energy (DOE). GPP also requires the government to avoid purchasing Ozone Depleting Substances (ODS) and EPA-designated priority chemicals. Environmentally preferable purchasing (EPP) is a voluntary program, and it encourage the purchase of goods and services that have decreased effects on human health and the environment (compared to the competing goods and services that serve the same purpose), but are not already required by one of the mandatory GPP elements.

(1) Green Procurement is mandated except when the contractor can show that the product with recycled content does not meet intended specifications, has excessive costs, or cannot be delivered in time to support the schedule of the contract. If the contractor is unable to locate a specified product meeting the GPP requirement, identify the issue to the CO or GPM for guidance. GPP is based on legal requirements and the Department of Defense facilities are subject to enforcement action if these requirements are ignored.

(2) The contractor shall make maximum use of products containing recovered materials that are EPA-designated items IAW FAR Clause 52.223-17, Affirmative Procurement of EPA-Designated Items in Service and Construction Contracts. The list of EPA-designated items is available at https://www.epa.gov/smm.comprehensive-procurement-guidelines-cpg-program.

2.6. Miscellaneous Paragraphs

2.6.1 Freedom of Information Act (FOIA). All official government records affected by this contract are subject to the provisions of the FOIA (5 U.S.C. 552/DoD 5400.7-R/AF Supplement). Any request received by the contractor for access/release of information from these records to the public (including government/contractor employees acting as private citizens), whether oral or in writing, shall be immediately brought to the attention of the CO for forwarding to the Base FOIA Manager to ensure proper processing and compliance with the Act.

2.6.2 Notification of Debarment/Suspension Status. The contractor shall provide immediate notice to the CO in the event of being suspended, debarred or declared ineligible by any other federal department or agency, or upon receipt of a notice of proposed debarment from another DoD Agency, during the performance of this contract.

2.6.3 Correspondence**.** The government singularly identifies each project with a contract number at time of award. The contract number is a unique identifier to purposely and permanently represent an awarded project. The government issued contract number is to be referenced on all official communication starting upon notice of award.

2.6.4 Post Award Conference. The contractor agrees to attend any post award conference convened by the CO IAW FAR Part 42.5. These meetings shall be at no additional cost to the government.

2.6.5 Privacy Act**.** Work on this contract may require that personnel have access to information protected by the Privacy Act. Contractor personnel shall adhere to the Privacy Act, Title 5 of the U.S. Code, Section 552a and applicable agency rules and regulations when handling such information.

2.6.6 Records. All records created and received by the contractor in the performance of this contract shall be maintained and readily accessible. Records shall remain the property of the government.

2.6.7 Insurance**.** The contractor shall obtain the necessary insurance as required by FAR part 28.3. The minimum amounts of insurance will be maintained IAW FAR 28.307-2.

2.6.8 Subcontracting. The contractor shall ensure that any subcontractor providing services on behalf of the contractor has been approved by the CO prior to any such performance. The subcontractor shall not have a negative performance history or be suspended or otherwise prohibited from doing business with the government.

2.6.9 Fire Prevention. The contractor shall take all necessary precautions to prevent fires in the units and contractor-furnished and government-furnished facilities while performing any work under this contract. In the event fires do occur, the contractor shall immediately notify the Base Fire Department at 911. The contractor shall then notify the requiring activity and the CO. The contractor shall brief and document its employees monthly in fire safety issues and procedures in reporting fires.

2.6.10 Flightline Driving. Employees who are required to drive vehicles on the flight line, cross the runway and shall have a Certificate of Competency, AF Form 483, a valid civilian and military driver's license, IAW AFMAN 24-306, page 25-1.

2.6.11 Hazardous Materials.

(1) Prior to use, the contractor shall provide the Base Hazardous Material Pharmacy, through the CO, a list of all hazardous materials the contractor brings onto government property and shall submit and AF Form 3952 along with a Material Safety Data Sheet (MSDS) for each Hazardous Chemical listed in OSHA Hazard Communication Standard 29 CFR 1910.1200. The purpose of the inventory is to provide information for Emergency Planning and Community Right-to-Know Act (EPCRA) reporting.

(2) Any products that meet the criteria of "Hazardous Waste" must be bar coded and tracked until permanently removed from government property. Criteria for identifying hazardous waste are contained in Subpart C of 40 CFR Part 261. NOTE: Products containing chlorofluorocarbons (CFC's) or ozone depleting substances shall not be allowed or approved for use.

(3) The contractor shall ensure that all contractor employees complete the local Air Force Hazardous Communication, HAZMart, and hazardous waste training. The contractor shall appoint a primary and alternate HAZMART and Hazardous Waste monitor. Monitors are responsible for training all contractor personnel regarding hazardous material containers maintained on base and complete MSDSs immediately upon receipt of new chemicals, products, or materials.

2.6.12 Inclement Weather. If the base closes due to inclement weather, the contractor will be released, by the installation commander, with the general population of the base at no decrement to contract price. The contractor will follow the local procedures for reporting in inclement weather as advertised on local television and radio stations.

2.7 **Security**

2.7.1 General:

2.7.1.1 The contractor shall comply with all base security regulations and with actions dictated by force protection condition changes/measures. For real-world situations/exercises, changes to force protection conditions could impact contractor performance of work and can include denial of access to the installation to perform work.

2.7.1.2. The contractor and its employees shall comply with all base traffic regulations.

2.7.1.3. Contractor employees are prohibited from possessing weapons, firearms or ammunition, on themselves or within contractor-owned or privately owned vehicle while on Air Force installations.

2.7.1.4. The contractor shall report suspicious activity to Security Forces at 911 in a timely manner. Tell the operating.

2.7.2. Additional Security Requirements:

2.7.2.1. Physical Security. The contractor shall be responsible for safeguarding all government equipment, information and property provided for contractor use. At the close of each work period, government facilities, equipment, and materials shall be secured.

2.7.3. Contractor Access To Air Force Installations. All contractor employees will be subject to a criminal history background check IAW Air Force Manual (AFMAN) 31-113, Installation Perimeter Access Control, as stipulated in the Installation Commander's memorandum to the 7th Security Forces Office dated 23 Apr 2015 (the AFMAN and memorandum are both limited access documents but more details on the requirements/process in terms of background checks can be provided by the CO upon request). Vehicle registration, proof of insurance, and a valid driver's license must be presented for vehicles. Installation Commanders may deny access and credentials based on information obtained during identity vetting that indicates the individual may present a threat to the good order, discipline, and morale of the installation.

Base Access. For contractor personnel who wish to obtain long-term Base access via an Air Force Materiel Command (AFMC) Form 496, Application for AFMC Identification Card, IAW Air Force Federal Acquisition Regulation Supplement (AFFARS) Clause 5352.242-9000, Contractor Access to Air Force Installations, the prime contractor shall submit a written request on company letterhead to the CO with the following information (prior to submitting a request for Base access via an AFMC Form 496): 1) contract number, 2) location of work, 3) expiration date (must be on or before contract's expiration date), and 4) names of employees/ subcontractor employees needing access to the base, to include each employee's company name.

It is recommended that the prime contractor provide a copy of the request letter to each employee for verification purposes when the employee comes to the Dyess AFB Visitor Control Center (VCC) to get their AFMC Form 496 signed. Employees for which no request letter can be found or provided will result in the employee being asked to return on another date/time so verification can be made.

Base passes will be limited to the length of the contract not to exceed 3 years from the date the AFMC Form 496 is submitted to the Dyess AFB VCC for signature.

Individuals requesting DBIDS passes/cards through AF Form 496s must be on an authorized DD Form 577 signed by the current Commander/Director of the presiding unit.

The AFMC Form 496 will be reviewed/approved by the CO, then taken by the contractor employee to the Dyess AFB VCC for the security portion and issuance of the Base pass.

Only employees who will be working on the contract consistently/frequently should be submitted for a long term base pass.

2.7.3.1 Visitors/contractors with driver's licenses from ME, MN, MO, MT, and WA (exceptions are EDL-Enhanced driver's licenses from MN & WA) will not be able to obtain base access without another form of identification as an identity proofing document. The list of authorized IDs can be found in the REAL ID Act of 2005. Please visit the Department of Homeland Security's (DHS) website to get the latest information, https://www.dhs.gov/current-status-states-territories.

2.7.4 During performance of the contract, the contractor shall be responsible for obtaining required identification for newly assigned personnel.

The contractor shall be responsible for prompt return of credentials and vehicle passes for: 1) any employee who no longer requires access to the work site; 2) upon request by a CO; and 3) upon completion or termination of the contract. The prime contractor shall ensure that all base identification passes issued to employees and subcontractor employees are returned to the issuing office. Failure to comply with these requirements may result in withholding of payment.

2.8. Safety

It is the contractor's responsibility to ensure its employees and managers have a comprehensive understanding of and full compliance with OSHA requirements. Detailed information is available on the OSHA website at http://www.osha.gov. It is the contractor's sole responsibility for compliance with OSHA, Public Law 91-596. The contractor shall comply with all federal, state and local laws, and Air Force Instructions for the protection of their employees while working on an Air Force Installation or property. The protection of contractor employees is exclusively the obligation of the contractor. Contractor shall manage all work areas to ensure the safety of building occupants, base personnel, or visitors in or near the areas.

The contractor shall submit a Safety and Health Plan that describes the capabilities and processes to ensure compliance with safety and health requirements during the performance of the work described in the solicitation. The contractor's plan shall include appropriate measures to ensure the contractor reacts promptly to investigate, correct and track alleged safety and health violations and/or uncontrolled hazards in contractor work areas. Contractor must ensure that personnel are properly trained on the equipment they are tasked to operate. The contractor shall develop site specific mishap reporting procedures which result in damage to government property or injury to Air Force personnel. These procedures are to be included in the safety and health plan for review. In accordance with AFI 91-202, AFMC Supplement, Safety Program, the contractor shall submit a Safety and Health Plan to the CO for review and acceptance by the safety office prior to contract award.

2.8.1. Safety Equipment. The contractor shall furnish personal safety equipment for its employees in performance of this contract. Safety equipment includes shoes or boots, eyewear, respirators, hearing protection harnesses and gloves.

2.8.2. Safety Threats**.** The government reserves the right to restrict the employment, under this contract, of any contractor employee, or prospective contractor employee who is identified as a potential threat to health, safety, security, general wellbeing, or the operational mission of the installation and its population. Contractor shall perform background checks, at contractor's expense, to ensure that said employee has not been convicted of any sexual crime or any crime against children.

2.8.3. Substance Abuse Testing. The consumption of alcoholic beverages or illegal drugs by contractor personnel, while on duty, is strictly forbidden. Contractor employees shall be subject to substance abuse testing as a result of a mishap investigation when an individual's actions or inactions are suspected as factors in a mishap sequence. The CO may identify the employees to be tested and the drugs and substances for which those employees must be tested. The service provider shall accomplish the specified testing using a certified (i.e., a certified lab that meets Department of Health and Human Services (DHHS)/ Substance Abuse and Mental Health Services Administration (SAMHSA) certification) medical substance abuse testing facility. Results of the test(s) shall be provided to the government solely for the purpose of completing an investigation. The contractor shall immediately remove any employee who is found to be under the influence of alcohol or drugs.

SECTION III

APPENDIX 1

Arrival Services. Services performed to prepare for and properly park transient aircraft in an assigned parking area.

Contract Administrator (CA). The individual within the contracting office who performs the day-to-day administration of the contract. The contract administrator may also be the contracting officer.

Contracting Officer (CO). The duly appointed Government agent authorized to award or administer contracts. The contracting officer is the only person authorized to contractually obligate the Government.

Defect. Any non-conformance with requirements specified in the contract.

Defective Service. A service output that does not meet the standard of performance specified in the contract for that service.

Fair Wear and Tear. The deterioration of items attributed to normal usage.

Government Furnished Property (GFP). Facilities, equipment, tools, supplies, parts, or any other items furnished for the concessionaire's use by the Government.

Major discrepancy. A major finding is defined as a condition that would endanger personnel, jeopardize equipment or system reliability, affect safety of flight, or warrant discontinuing the process or equipment operation.

Minor discrepancy. A minor finding is defined as an unsatisfactory condition that requires repair or correction, but does not endanger personnel, affect safety of flight, jeopardize equipment reliability, or warrant discontinuing a process or equipment operation.

Quality Control (QC). Those actions taken by a Contractor to control the performance of services so that they meet the requirements of the SOW.

ACRONYMS

AFI	Air Force Instruction
ADPE	Automated Data Processing Equipment
AFOSH	Air Force Occupational Safety and Health
AGE	Aerospace Ground Equipment
CM	Contract Manager
CO	Contracting Officer
DLAP	Dyess Linear Air Park
DV	Distinguished Visitor
FC	Functional Commander
GFP	Government-Furnished Property
IAW	In Accordance With
VCC	Visitor Control Center

APPENDIX 2

F-84F (51-9364) CMI

The USAF F-84F Thunderstreak (51-9364) will be repainted using a base silver color with an insignia red (FS 11136) tail flash and air intake (Consult Reference Figure 3 and 4). This aircraft currently has a completely fabricated "generic" paint scheme that curators wasted weeks trying to identify (Consult Reference Figure 8). The curator plans to request a CMI change to put this aircraft back into the livery of the 27th Strategic Fighter Wing that this fighter was assigned to back in the 1950s at Bergstrom AFB, TX. This serves to make an accurate representation of this aircraft as it was and to depict the original intent of the Dyess Linear Air Park, which was to depict Texas-based aircraft.

1. The overall color is silver/metallic paint. Consult Reference Figures 3, 4, 9, 10, and 11.

2. Parts to be masked off to prevent application of paint include but are not limited to exterior lights, static ports, pitot tubes, metal labels, inside the gun barrel openings, and piston rods. No reference.

3. The antenna on the center of the dorsal ridgeline and the canopy glass are to be painted gloss black (FS 17038). Consult Reference Figures 3, 4, 9, 10, and 11.

4. The national insignias on the top of the port-side wing and bottom of the starboard-side wing are 40" and those on the fuselage are both 35". National Stars are applied in full color, gloss insignia blue (FS 15044), gloss insignia red (FS 11136) and gloss insignia white (FS 17875). National Insignias on the wings will be situated perpendicular to the centerline of the aircraft, not sloped with the wing. Consult Reference Figures 1, 2, 3, 4, 9, 10, 11, and 12.

5. There are ½" wide oval (without stencil cuts) around the static ports. Circles are applied in insignia red. This circle is situated centered around two static ports on the nose of the aircraft on the lower side of the fuselage. Consult Reference Figure 10.

6. The tail number, 19364, is 9" high standard Amarillo USAF font (1.5" wide stroke, with stencil cuts), and painted gloss black on both sides of the tail. A silver letter box will surround the tail number to ensure ease of reading. Consult Reference Figures 1, 2, 3, 4, 9, 10, and 11.

7. The data block is located on the left side of the aircraft in the upper right corner of the national star, stenciled in gloss black in 1" standard stencil font (with stencil cuts) It reads:

U.S. AIR FORCE F-84F
A.F. SERIAL NO. 51-9364
SERVICE THIS ACFT. WITH
GRADE JP-4 JET FUEL

Consult Reference Figure 1 and 2.

8. The words "U.S. AIR FORCE" will appear on the vertical stabilizer of the aircraft on port and starboard sides just above the tail number, aligned center on the number. Letters will be applied in Amarillo USAF font, in 4.5" letters in gloss black. Consult Reference Figures 3, 4, 9, 10, and 11.

9. A Strategic Air Command (SAC) stripe or "Milky Way Galaxy" will be applied to the nose of the aircraft. The galaxy will be applied at an approximately 45-degree slant from the nose at the top to the landing gear doors at the bottom to port and starboard. The stripe will be 9 inches thick, uniformly over the whole stripe. The Milky Way will terminate at the top at the edge of the anti-flash and at the bottom at the edge of the landing gear door. The leading edge of the Milky Way will be the trailing edge of the red nose. The Milky Way Galaxy will be applied in gloss insignia blue (FS 15044). Stars applied to the Milky Way are non-uniformly applied but will be a combination of 3 and 1.5 inch, five-pointed stars with a point up. The stars will cover the entire stripe with no clumping, constellation patterns or voids. Stars will be painted in gloss insignia white (FS 17875). Consult Reference Figures 3, 4, 9, 10, and 11.

10. Superimposed over the SAC Milky Way Galaxy on the port-side only will be applied a SAC Emblem. The emblem will be 20" tall and wide at the widest point. Decal may be used for this application. Consult Reference Figure 5 and 11.

11. Superimposed over the SAC Milky Way Galaxy on the starboard-side only will be applied a 27th Strategic Fighter Wing Emblem, sans banner. The emblem will be 20" tall. This emblem should not use the modern, curvy shield, but rather, the straight sided old-style shield without the motto banner. Decal may be used for this application. Consult Reference Figure 4, 6, and 9.

12. Under the port wing and on top of the starboard wing the letters "USAF" are applied in 25-inch-tall letters using Amarillo USAF font and painted in insignia blue (FS 15044). Letters will be perpendicular to the centerline of the aircraft, not sloped with the wing. Consult Reference Figures 2, 4, 9, 10, and 12.

13. In the front port-side corner of the cockpit, the tail number (51-9364) should be stenciled in 1-inch digits using gloss black paint in a standard stencil cut. No Reference.

14. A one to one-half-inch, insignia white outline will surround the glass-side perimeter of the canopy. Consult Reference Figures 3, 4.

15. A two-inch, insignia red line will indicate the turbine inside. This line will circumvent the entire aircraft, except where the line passes the black antenna on the dorsal ridge line. The line is applied just aft of the small air exhaust on the side of the fuselage. Consult Reference Figures 1, 2, 3, 4.

16. Anti-flash black will be painted on the upper nose of the aircraft. It will be narrower than what is currently applied. And will go from the edge of the air-intake all the way to the front frame for the canopy glass. Two points will extend, port and starboard to the aft edge of the front canopy glass section. This will be painted in a gloss or semi-gloss black paint. Consult Reference Figure 1, 2, 3, 4.

17. Buzz numbers FS-364 will be applied on the nose aft of the SAC Stripe on both port and starboard. They will be applied in insignia blue (FS 17044) using 18-inch, Amarillo USAF font (with stencil cuts).

Letters and digits will be centered on a horizontal line from the leading point of the wing. Do not forget the dash. Consult Reference Figure 3, 4, 9, 10, and 11.

18. The tail flash indicative of the 27th Strategic Fighter Wing is an insignia red right triangle. The 90-degree right angle will be on the lower trailing edge of the rudder, below the horizontal stabilizer. The altitude side will follow the rudder's trailing edge and will span the entire length of the rudder and no farther. The base edge will lead from the bottom corner of the rudder to the leading corner of the horizontal stabilizer. The hypotenuse will span from the top trailing corner of the rudder to the leading corner of the horizontal stabilizer with the following variation. When the hypotenuse comes within two inches of any writing, the silver will cut in to facilitate legibility of the tail number and U.S. Air Force markings. The overall effect will be a tilted right triangle. This design will be applied to port and starboard. Consult Reference Figure 3, 4, 9, 10, and 11.

19. From the edge of the air intake back to the first panel line will be painted insignia red. This will not be interrupted by the anti-glare swath. Consult Reference Figure 3, 4, 9, 10, and 11.

20. Another marking indicative of the 27th Strategic Fighter Wing is the application of a yellow and insignia red lightning bolt port and starboard. The bolt will consist of a solid yellow field with a half-inch, insignia red boarder. There are four and a half saw teeth on top and bottom and they change directions together. The lightning bolt tip starts at the leading edge of the wing-root panel. The lightning bolt terminates above the first presentation of the small air intake. Consult Reference Figure 3, 4, 9, 10, and 11.

21. The air brakes and the exhaust shroud should be stripped of all paint and polished to a high shine. No reference.

22. The top of the vertical stabilizer should be painted in white with the exception of the leading corner which should be painted gloss black. As part of an antenna system, it should not be painted at all, but for protection from the elements, it will be painted. Consult Reference Figure 3, 4, 7, 9, and 10.

23. Bird-proofing spikes will be added to the crest of the tail. No reference.

24. Aircraft tires will be painted in semi-gloss black with the hubs and landing gears painted silver. No Reference.

25. Detail stencils marking panel contents, jacking points and other minor markings will be applied as photographic references support their application.

26. All paints will be applied in gloss rather than mission essential flat finishes for cleaning, water run-off, and reduced dirt embedding purposes. Exception will be made for tires. No Reference.

PAINT COLORS USED IN PROJECT

1. Gloss insignia white (FS 17875)
2. Gloss black (FS 17038)
3. Gloss insignia blue (FS 15044)
4. Gloss insignia red (FS 11136)
5. Orange/Yellow (FS 13538)
6. Silver/Aluminum
7. Matte black (FS 37038)

Reference Figures

Reference Figure 1

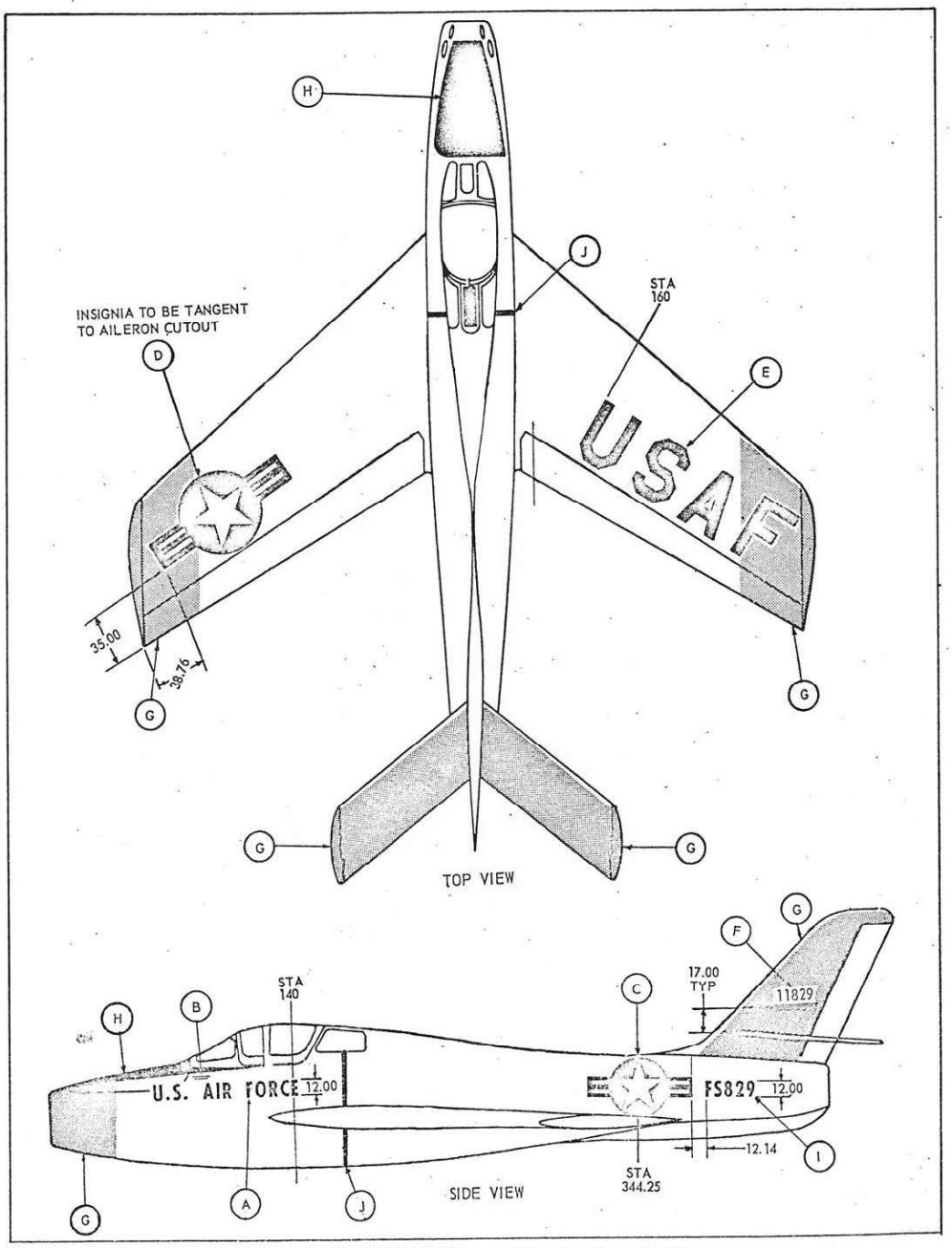

Figure 3-30. F/RF-84 Aircraft Marking Specification.

Reference Figure 2

F-RF84 AIRCRAFT MARKING SPECIFICATION (SEE FIGURE 3-30)

1. MARKING	2. LOCATION	3. SIZE	4. COLOR
A. U.S. Air Force	Both Sides of fuselage	Letters 12 inches high	-Code 15044
B. Model Designation, Aircraft Serial Number and Fuel Requirement	Left side of fuselage only	Letters and numbers 1 inch high	-Code 17038
C. National Star	Both sides of fuselage	35-inch star	Background, Border, -Code 15044. Stars, Bars - Code 17875. Stripes - Code 509.
D. National Star	On under surface of right wing and top surface of left wing	40-inch star	Background, Border, -Code 15044. Stars, bars - Code 17875. Stripes - Code 509.
E. USAF	On top surface of right wing and under surface of left wing	Letters 35 inches high	-Code 15044
F. Call Numbers	Both sides of vertical stabilizer	Numbers 9 inches high	-Code 17038
G. Conspicuity/ Arctic Markings	One inch clearance around all large insignia and markings		-Code 633
H. Anti-Glare	Top of fuselage in front of cockpit		-Code 37038
I. Identification Letters and Numbers	Both sides of fuselage	Letters and numbers 12 inches high	-Code 15044
J. Jet Warning Stripe	Around fuselage	2 inches wide	-Code 509

Disregard Items A., The orientation of D., The orientation and size of E., G., location and size of I, and the location of J.
Reference Figure 3

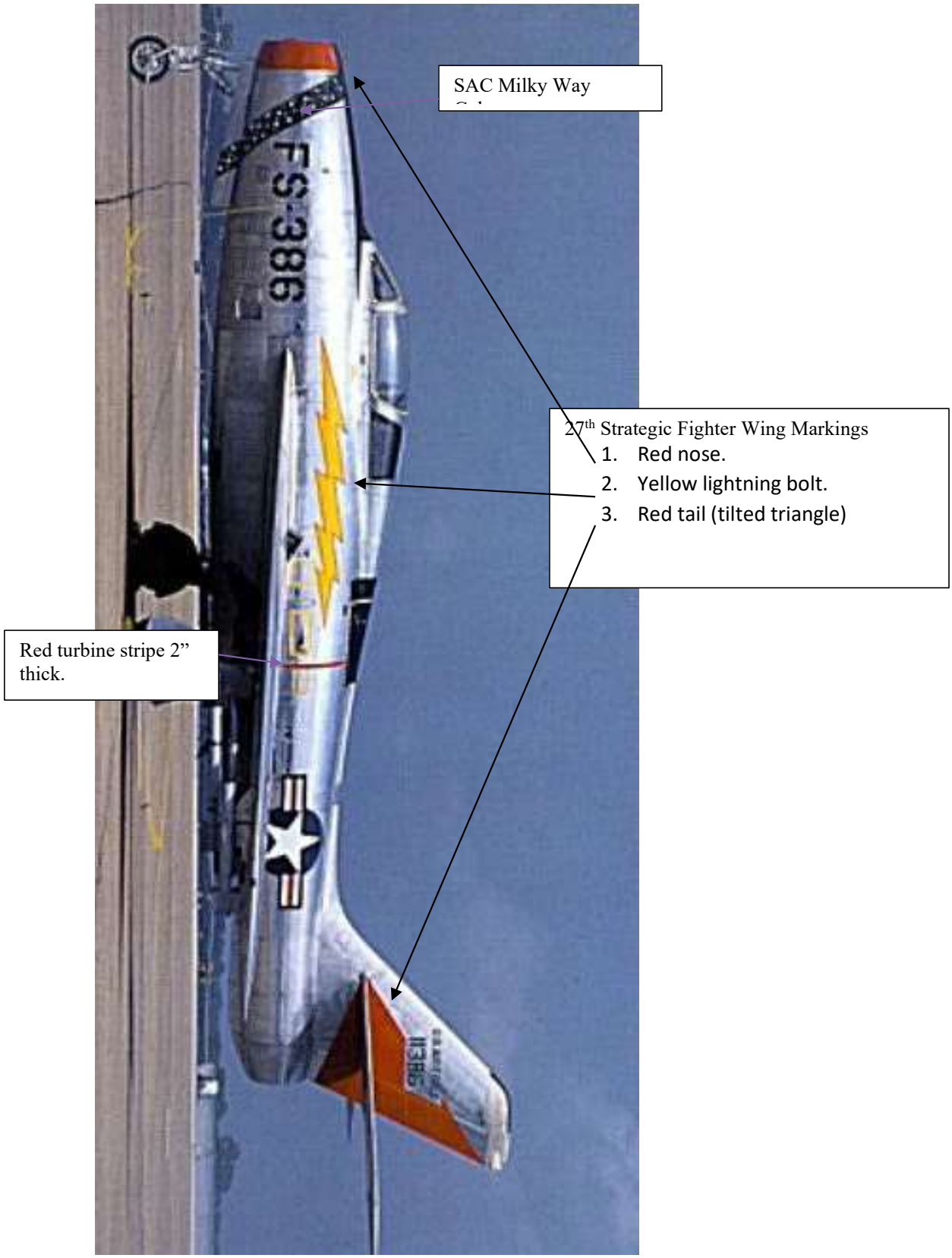

Reference Figure 4

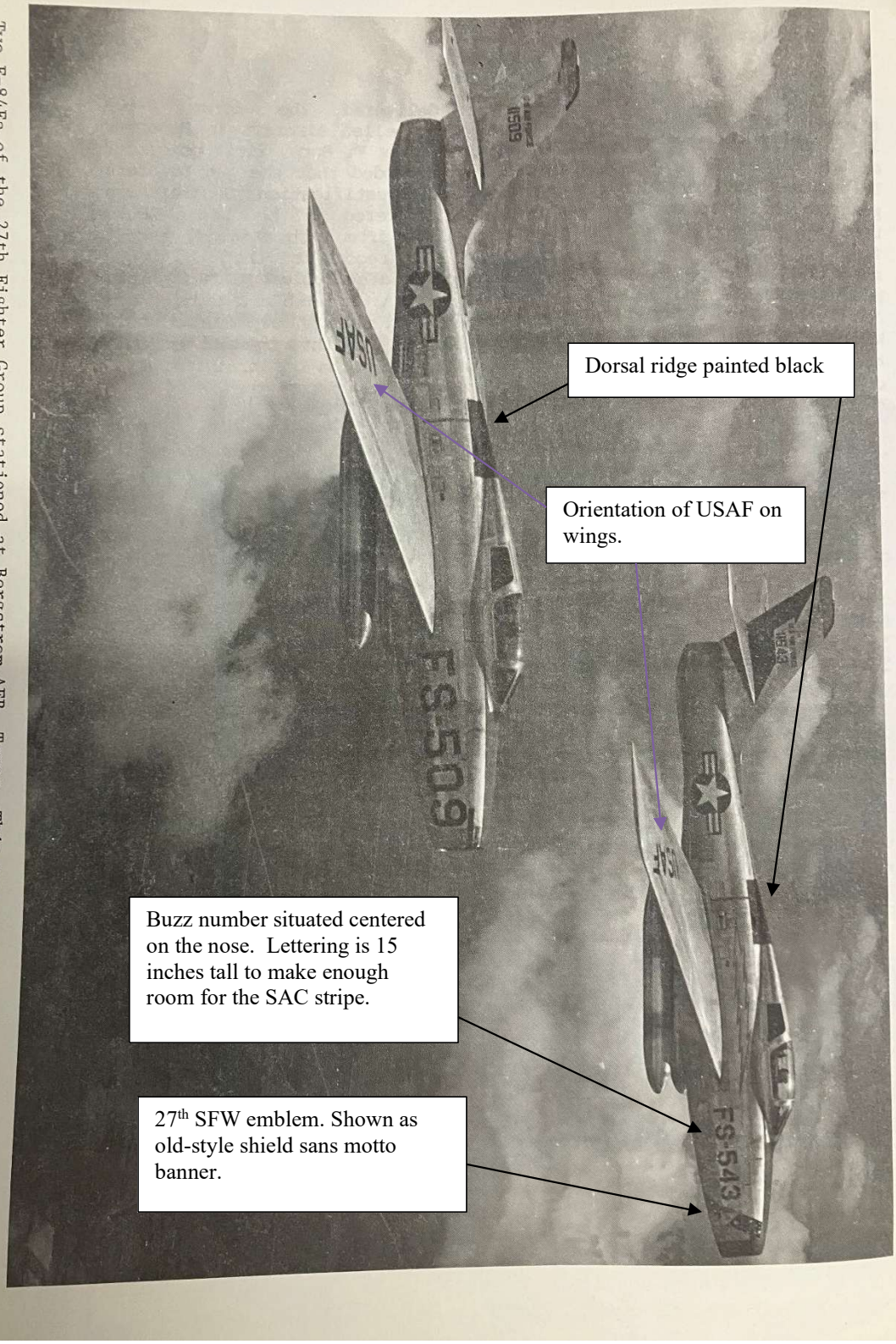

Two F-84Fs of the 27th Fighter Group stationed at Bergstrom AFB, Texas. This was a swept-wing version of the F-84.

Reference Figure 5

Reference Figure 6

INTELLIGENT STRENGTH

Reference Figure 7

Tip of tail off white or white with black front corner.

Reference Figure 8

Current livery. Applied as generic, representing no historic unit markings.

Reference Figure 9

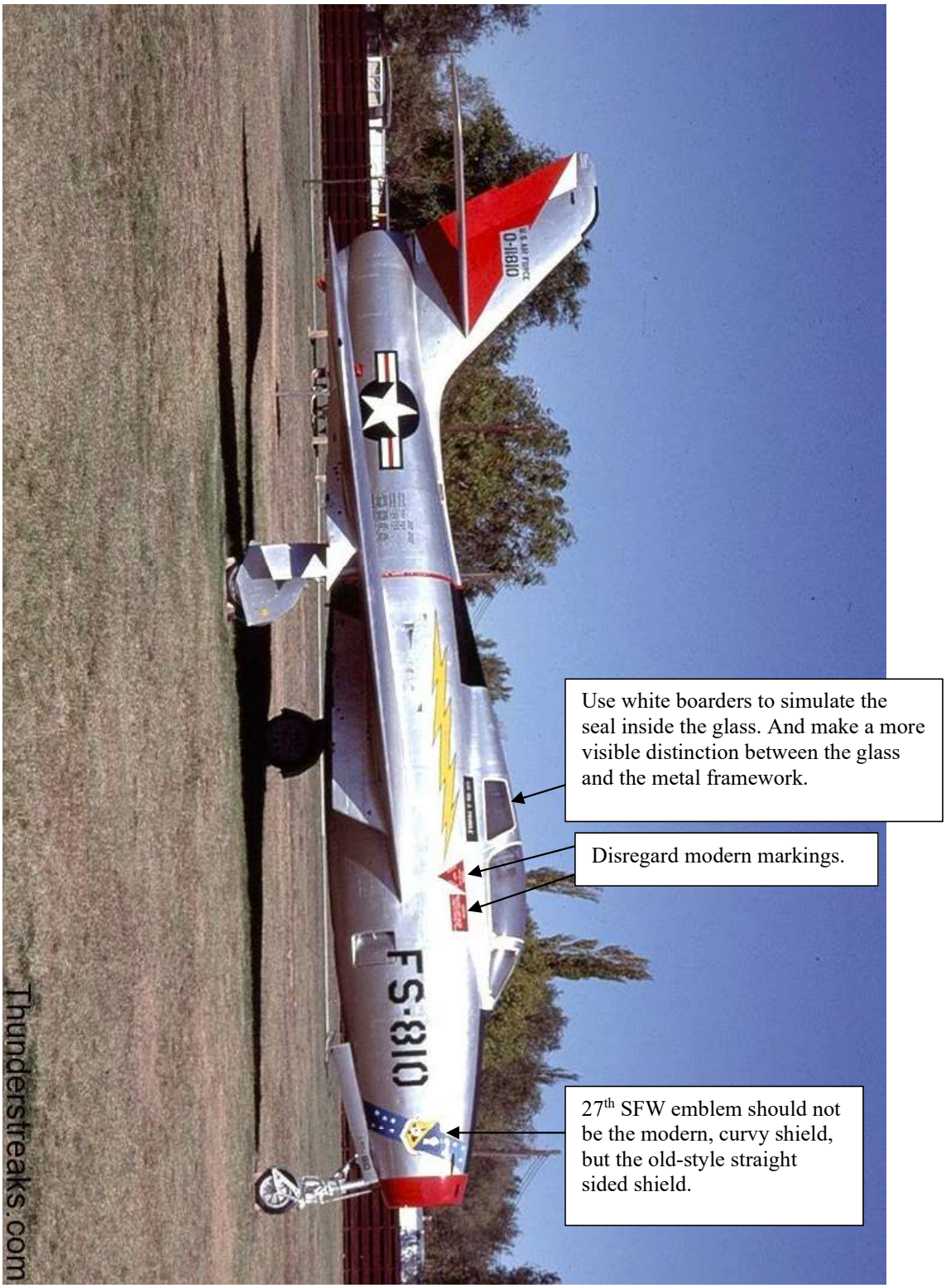

Example of livery on static display at Cannon AFB, NM

Reference Figure 10

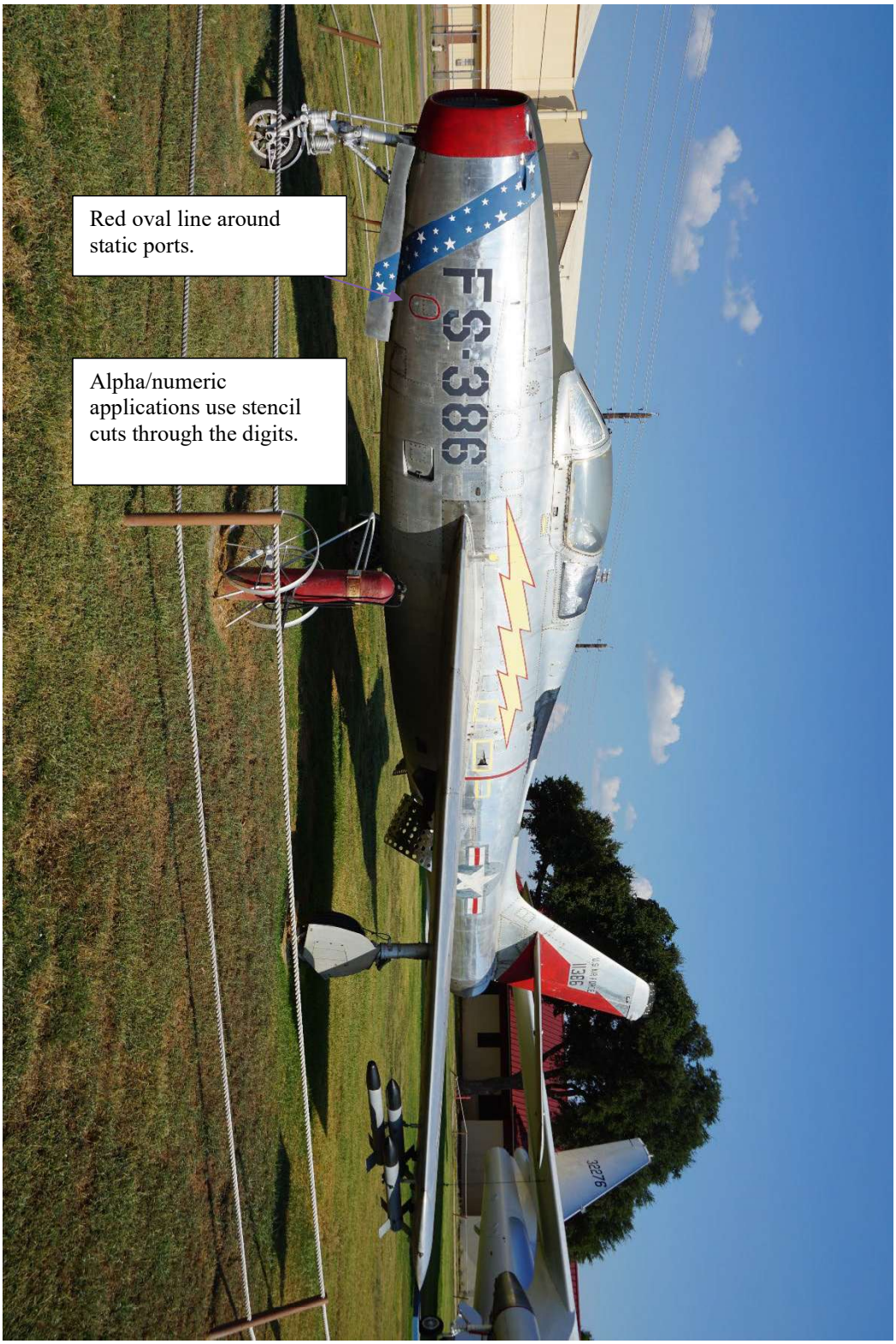

Example of livery on static display at Barksdale AFB, LA
Reference Figure 11

Example of livery on static display at Strategic Air and Space Museum, NE
Reference Figure 12

Orientation of National Star and USAF on bottoms of wings. Extrapolate reciprocal for top of wing.

APPENDIX 3

RB-66B (53-0466) CMI

The USAF RB-66B Destroyer (53-0466) will be repainted in a no CMI change Southeast Asia Camouflage pattern (Consult Reference Figure 1). This aircraft currently has this pattern applied, but the paints used at the last application were cheap house paints that faded to unrecognizable colors. Consult Reference Figure 10. The curator plans to establish this as the official CMI of this aircraft. This serves to make an accurate representation of this aircraft as it would have been during its service life.

1. The aircraft will be painted IAW the Southeast Asia (SEA) camouflage pant scheme detailed in T.O. 1-1-4. This paint scheme uses the following colors: FS 10219 (Tan), FS 16622 (Gray), FS 14079 (Dark Green), FS 14102 (Light Green). All colors will be applied in gloss paints, not matte. Color swaths will be applied IAW Reference Figure 1.

2. Parts to be masked off to prevent application of paint include but are not limited to exterior lights, static ports, metal labels, and piston rods. No reference.

3. The national insignia on the top of the port-side wing is 15" and those on the fuselage are both 15". National Stars are applied in full color, gloss insignia blue (FS 15044), gloss insignia red (FS 11136) and gloss insignia white (FS 17875). National Insignias on the wings will be sloped with the wing. Consult Reference Figures 4 and 9.

4. There are ½" wide circle (with stencil cuts) around the static ports (3 to port, 3 to starboard). Circles are applied in insignia red. This circle is situated centered around the static ports on the nose of the aircraft and will have some overlap. Consult Reference Figure 4.

5. The tail number, 53-0466, is as follows: Standard Amarillo USAF font (without stencil cuts). The format will be a 5-inch AF above a 5 inch 53. Following these stacked digits will be the numbers 466 in 12-inch digits (2 inch stroke, no stencil cuts). To port the tail number will be painted gray (FS 16622). To starboard, the AF/53 stack will be applied in gloss black with the three digits applied in gloss gray. Consult Reference Figures 2,4,6, and 8.

6. The data block is located on the left side of the aircraft in the upper right corner of the national star, stenciled in gloss black in 1" standard stencil font (with stencil cuts) It reads:

U.S. AIR FORCE RB-66B-DL
A.F. SERIAL NO. 53-0466
SERVICE THIS ACFT. WITH
GRADE JP-4 JET FUEL
REFERENCE T.O. 42B1-1-14

Consult Reference Figure 2,6, and 8.

7. On the nose landing gear door, the numbers 466 should be applied in the lower front corner. Digits should be three inches tall and in Amarillo USAF font with no stencil cuts. Digits will be applied in gloss black. Consult Reference Figure 2 and 6.

8. Above the TAC Emblem on the tail will be the letters JN. Letters will be 20 inches tall and applied in Amarillo USAF font. On both sides the marking will be applied in gray (FS 16622). Consult Reference Figure 2, 4, 6, and 8

9. At the crest of the tail will be a red and white checkerboard stacked two high. These being applied to a non-squared surface will have a varied number of horizontal squares. The bottom of the tail flash should be the first panel line from the top. Consult Reference Figure 2, 4, and 6.

10. Landing gear will be painted silver or metallic paint. Consult Reference Figure 2, 4, and 6.

11. All windows will be painted gloss black. No Reference.

12. Air Vents on the engine nacelles will be painted insignia red. No Reference

13. Danger/ Ejection Seat triangles will be applied port and starboard behind the aft-most cockpit window. It will be forward of the small window behind the main cockpit. Consult Reference Figure 2 and 6.

14. The underside of the nose radome will be painted gloss black along with the refueling probe. Consult Reference Figure 2, 3, 4, and 6.

15. Both rescue control panels will be outlined in yellow a half-inch thick with the round buttons painted yellow. Consult Reference Figure 2 and 6.

16. Forward of the rescue buttons will be an instruction box painted black and outlined in a half-inch thick yellow box. The instructions will read as follows:

EMERGENCY ESCAPE HATCH RELEASE /
PUSH BUTTON REMOVE DOOR PULL HANDLE /
CAUTION DO NOT MOVE YELLOW HANDLE IN COCKPIT

These letters will be ½ inch tall and in stencil font with stencil cuts. They will be applied in yellow paint. Consult Reference Figure 2 and 6.

17. Antennae in the vertical stabilizer will be painted gloss black from end to end. Consult Reference Figure 4.

18. The rectangular antennae on the vertical stabilizer will be painted gloss black. Consult Reference Figure 4.

19. The exhaust end of the two engines will be painted in metallic paint. Consult Reference Figure 4 and 6.

20. The fuel cap on the lower starboard side shall be painted insignia red with a red ring around it. Consult Reference Figure 4.

21. The bulge under the lower rear part of the aircraft shall be painted gloss black. 2, 4, and 6.

22. Bird-proofing spikes will be added to the crest of the tail. No Reference.

23. Aircraft tires will be painted in semi-gloss or matte black. No Reference.

24. Detail stencils marking panel contents, jacking points and other minor markings will be applied as photographic references support their application. No Reference.

25. All paints will be applied in gloss rather than mission essential flat finishes for cleaning, water run-off, and reduced dirt embedding purposes. Exceptions will be made for tires. No Reference.

PAINT COLORS USED IN PROJECT

1. Gloss insignia white (FS 17875)
2. Gloss black (FS 17038)
3. Gloss insignia blue (FS 15044)
4. Gloss insignia red (FS 11136)
5. Orange/Yellow (FS 13538)
6. Silver/Aluminum
7. Matte black (FS 37038)
8. Tan (FS 10219)
9. Light Gray (FS 16622)
10. Light Green (FS 14102)
11. Dark Green (FS 14079)

Reference Figure 1

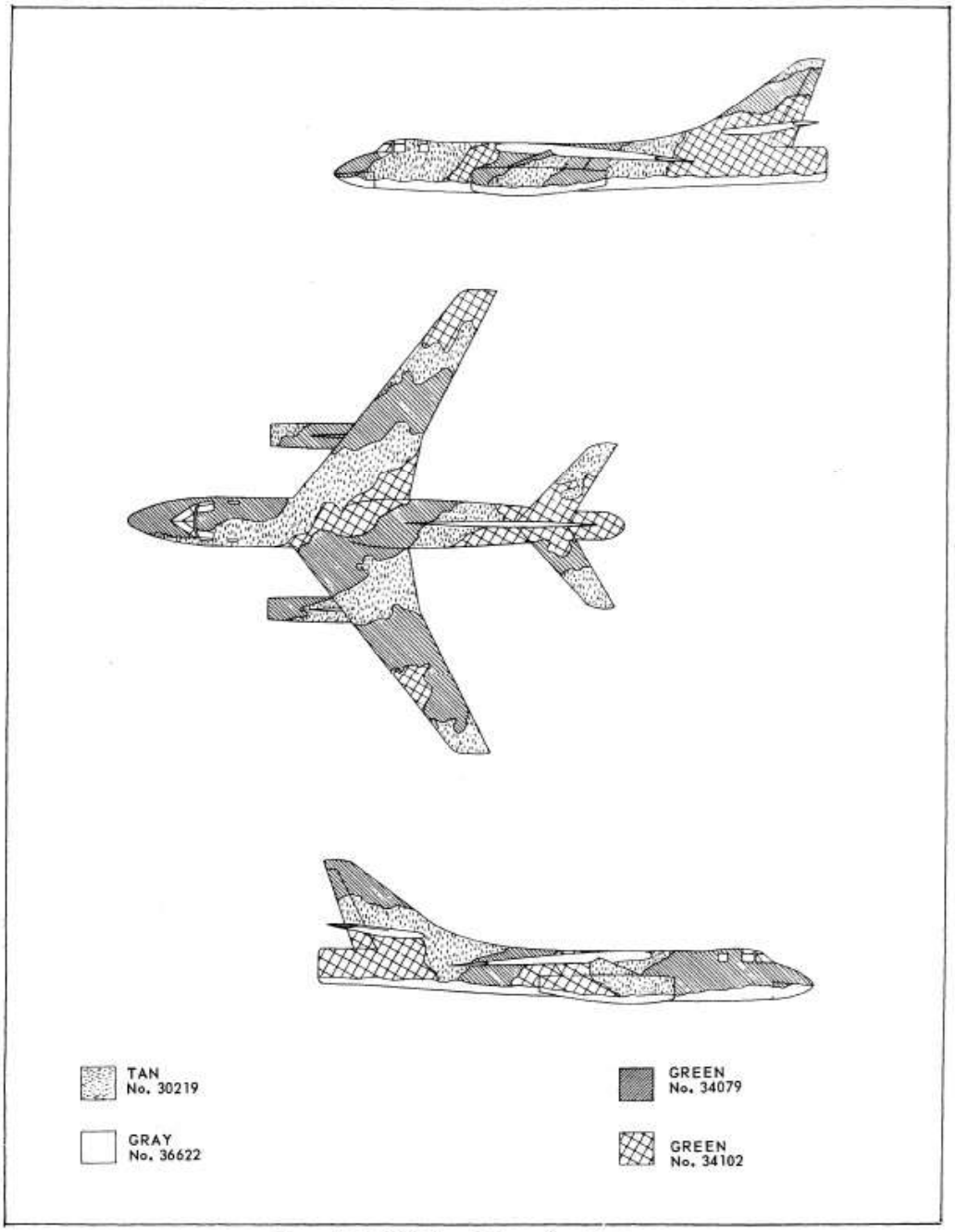

Figure 7-6. B-66 Aircraft Camouflage Pattern.

T.O. 1-1-4

Reference Figure 2

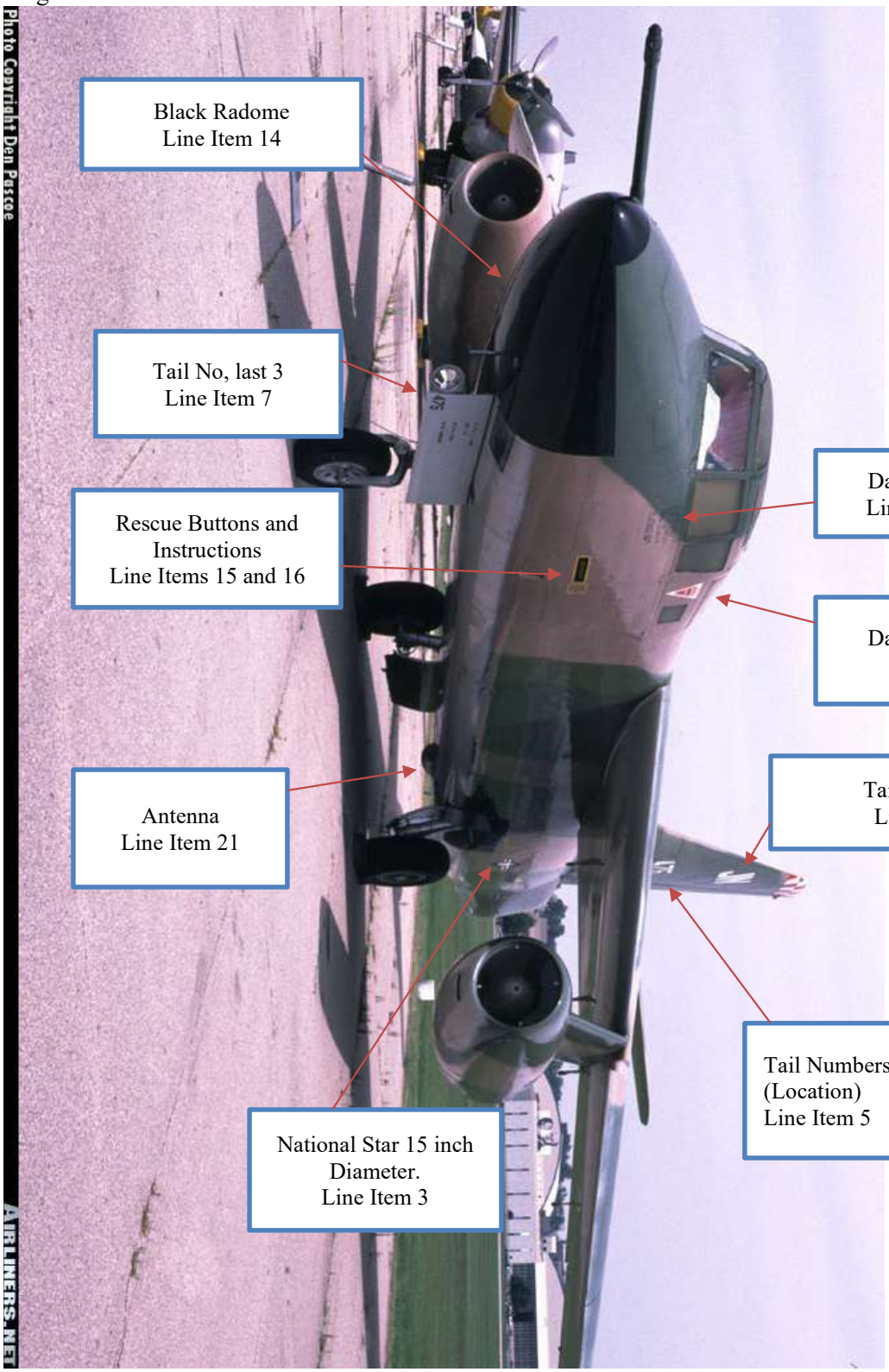

RB-66B Destroyer at NMUSAF

Reference Figure 3

Reference Figure 4

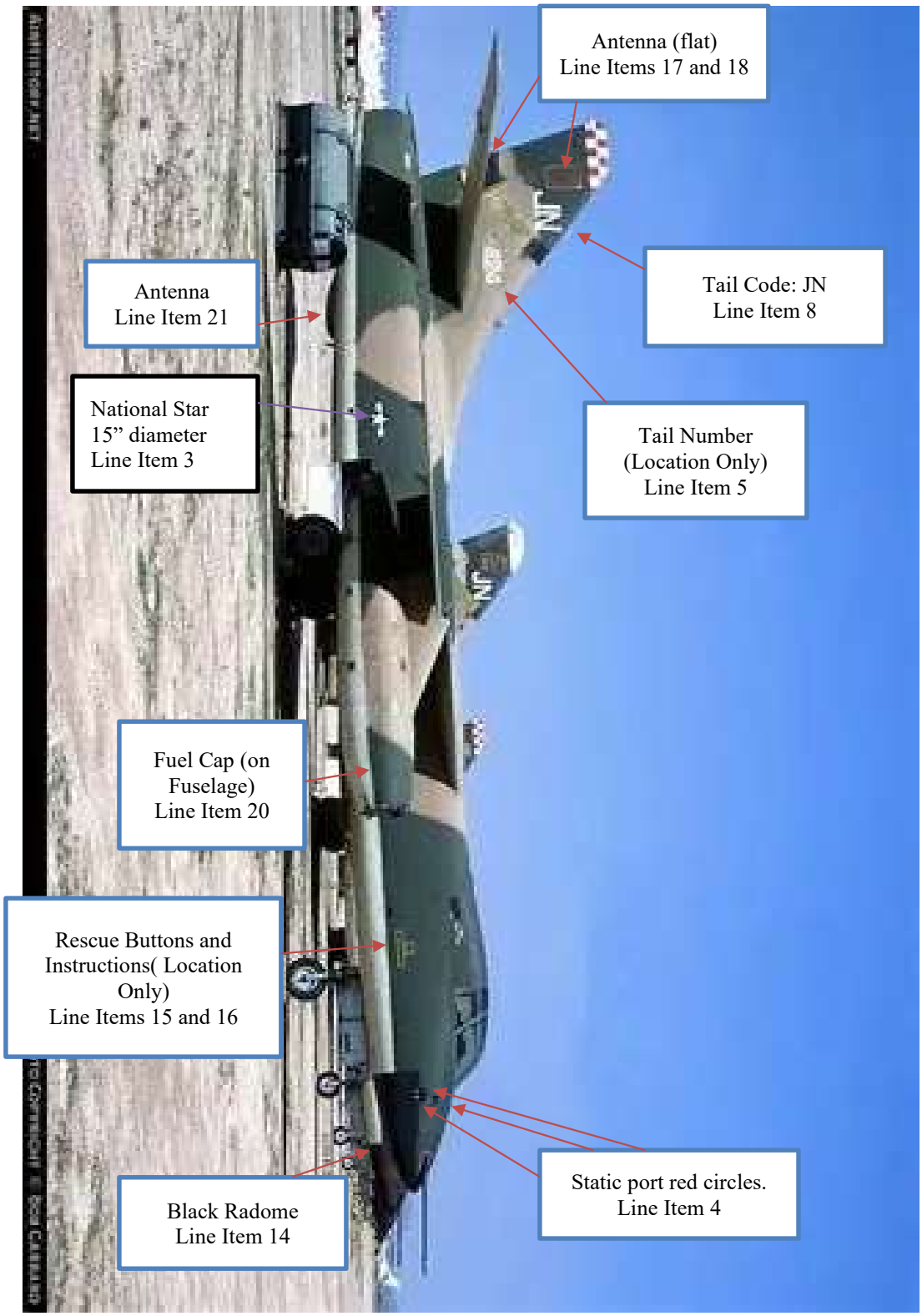

B-66 Destroyers at AMARG

Reference Figure 5

Tactical Air Command Emblem.

Reference Figure 6

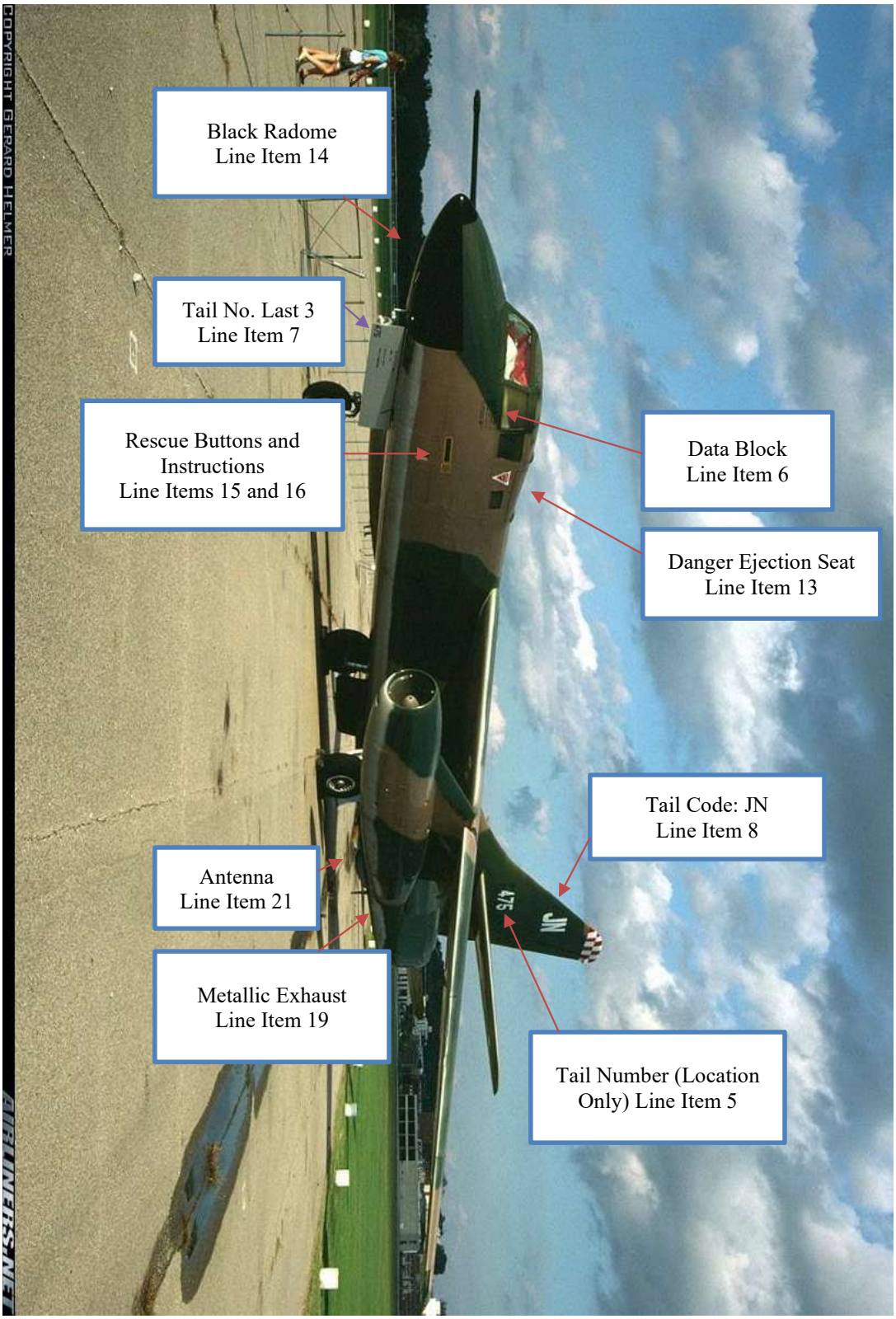

Reference Figure 7

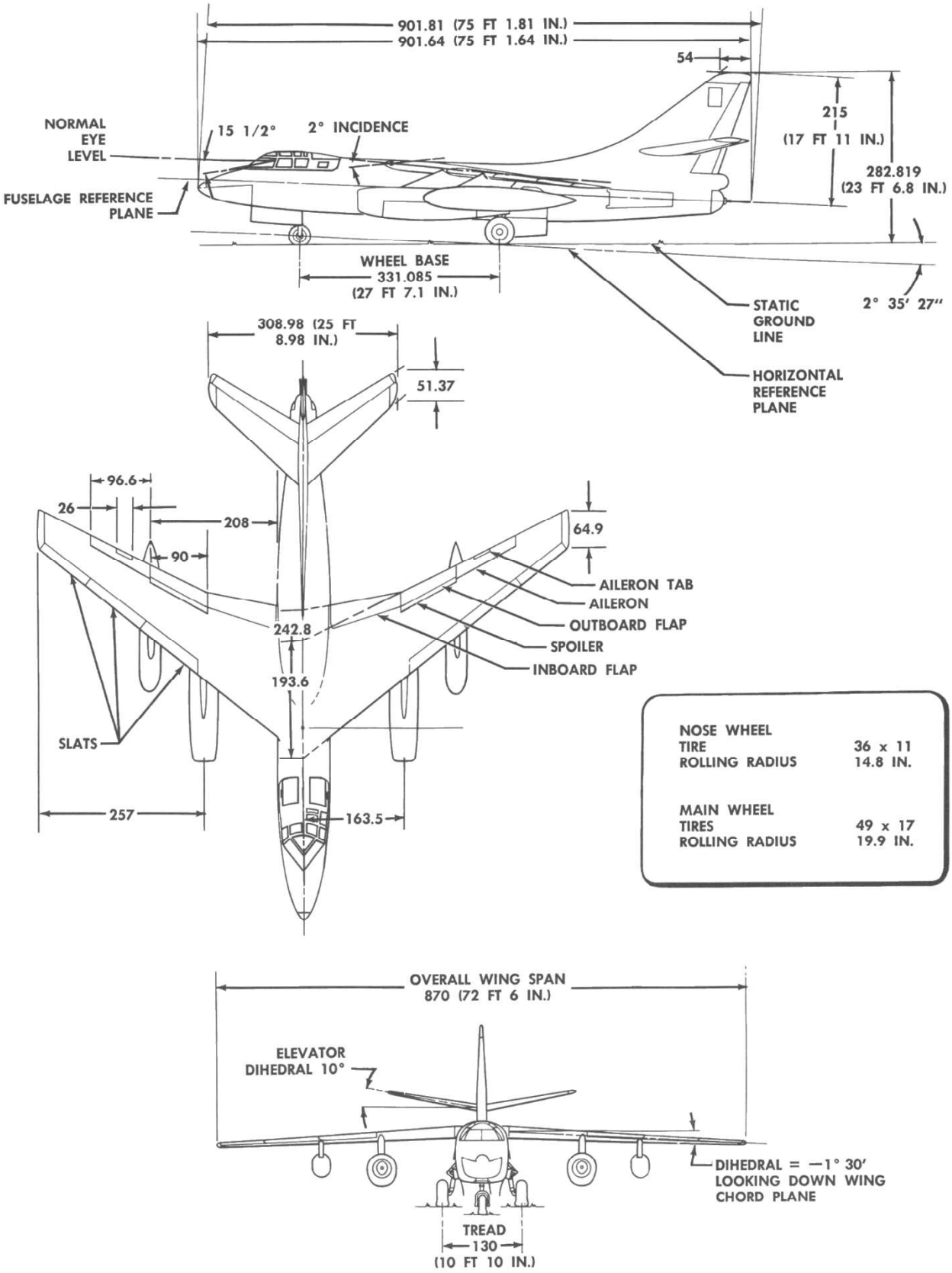

Reference Figure 8

FORM OF LETTERS AND NUMERALS

SINGLE STROKE GOTHIC VERTICAL LETTERING

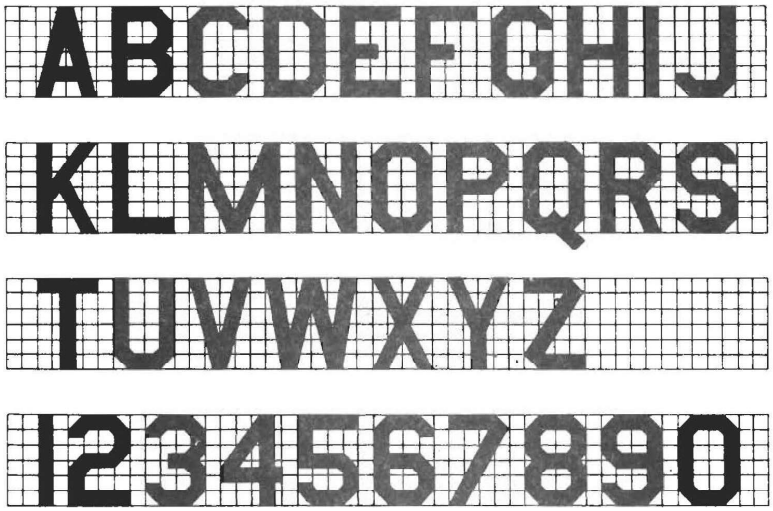

WIDTH OF LETTERS TO BE 2/3 OF HEIGHT
WIDTH OF LETTERS "M" AND "W" SAME AS HEIGHT
WIDTH OF LETTER "I" AND NUMERAL "1" TO BE 1/6 OF HEIGHT
STROKE TO BE 1/6 OF HEIGHT
SPACE BETWEEN LETTERS AND NUMERALS TO BE 1/6 OF HEIGHT
SPACE BETWEEN WORDS TO BE 2/3 OF HEIGHT

VERTICALLY APPLIED LETTERING:

SPACE BETWEEN LETTERS AND NUMERALS 1/6 HEIGHT
SPACE BETWEEN WORDS SAME AS HEIGHT

Figure A-4. Form of Letters and Numerals

Reference Figure 9

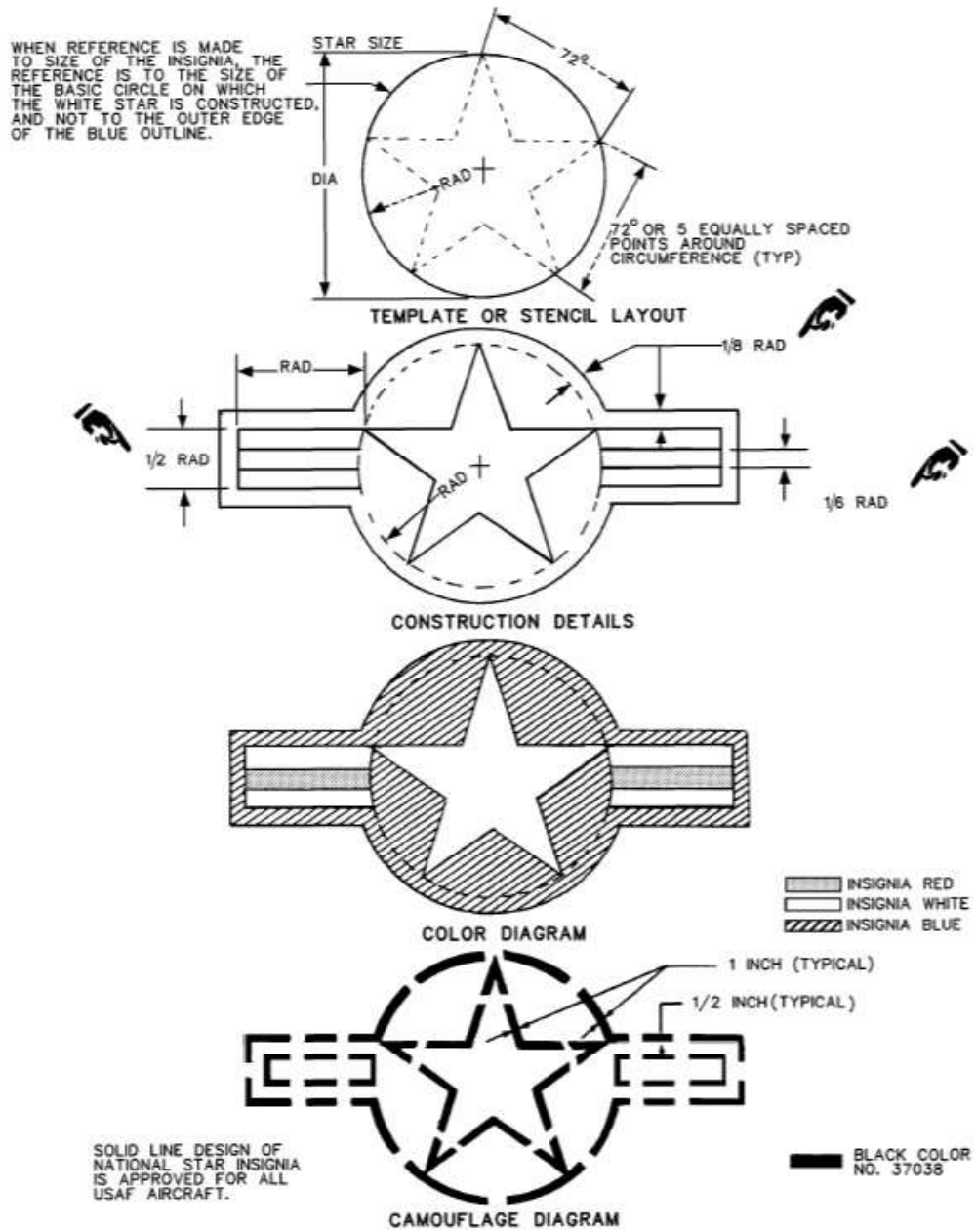

Figure A-1. National Star Insignia

Reference Figure 10

Black Radome
Line Item 14

Current state of aircraft.