PRODUCT OVERVIEW

The KMC Difference

USA Made
Over 55 years strong as an independent American manufacturer

Dependable
Trusted by a global network of system integrators, distributors and OEMs

Innovative
Solutions that improve efficiency, energy performance, comfort, and safety

Versatile
Powering buildings of every size—from local facilities to landmark sustainable projects

Founded in 1969, KMC Controls is an American manufacturer of open, secure, and scalable building automation and technology solutions.

Today, KMC Controls delivers innovative, intuitive building automation solutions backed by responsive people, a commitment to quality, and a dedication to open systems—positioning us for continued growth as technology evolves.

KMC Controls is your one-stop turnkey solution for building control.

We specialize in open, secure and scalable building automations, teaming up with leading technology providers to create innovative products that help customers increase operating efficiency, optimize energy usage, maximize comfort, and improve safety.

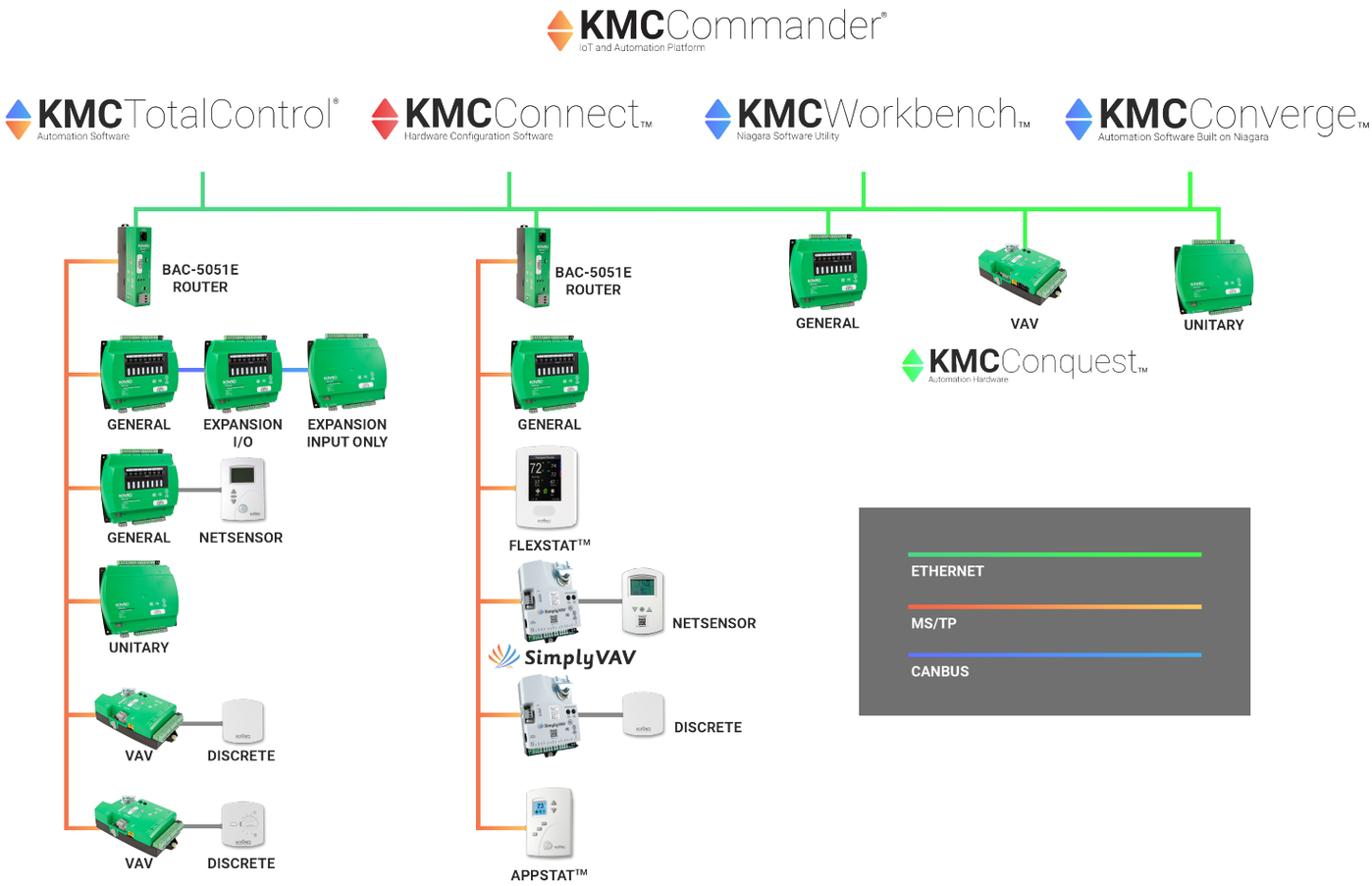

Our building automation hardware and software lineup spans from basic application controllers to fully programmable, customizable solutions with integrated alarming, trending, and scheduling.

Advanced configuration technologies enable fast, secure setup from a smart mobile device. Innovative hardware options provide unparalleled visibility and hands-on control, delivering exceptional flexibility and control for a wide range of building automation applications.

Let our Building Geniuses take your facility to the next level.

KMCFusion™

Combining Power and Flexibility

KMC Fusion is an open, secure, and scalable building automation controller that delivers unmatched power and flexibility for managing high-value, mission-critical equipment. It enables precise control, real-time responsiveness, and seamless integration with both legacy and modern systems—making it the ideal platform for intelligent building management now and into the future.

Features & Benefits

- From AHUs to RTUs, lighting to pumps—KMC Fusion brings unified control to the equipment that keeps buildings running.
- Create and customize control strategies with intuitive wiresheet programming through any open *Niagara Workbench* software
- Unlock reliable data logging, smart alarms, schedules, and sleek web visuals—all on a proven global platform.

Equipment Control
KMC Fusion delivers flexible control for a wide range of HVAC and building systems — from AHUs and chiller plants to pumps, lighting, and rooftop units.

Native *Niagara*
Powered by *Niagara 4*, KMC Fusion supports data logging, alarms, scheduling, visualization, and secure *FOX* communications for seamless integration into existing systems.

Optimized Licensing
Scalable licensing keeps costs low for small jobs while supporting larger equipment. As a *Niagara Edge* device, KMC Fusion counts as just one-tenth of a standard network load.

KMCCommander®
IoT and Automation Platform

Relevant data, real time: The Internet of Things is here

KMC Commander is a secure, open IoT platform that delivers immediate operational value while supporting long-term digital strategy.

It connects building systems through standards-based integration to provide real-time insights that optimize performance and occupant experience.

- Optimizes energy usage, efficiency, comfort, and safety
- Open, standards-based integration across building systems
- Secure on-premise data collection with cloud connectivity
- Real-time tracking, trending, and actionable data insights

Unmatched Scalability
From one asset to an entire campus, KMC Commander delivers affordable scalability and actionable insights across all your properties.

Lower Costs. Greater Efficiency.
Using your existing building management systems, KMC Commander consolidates your entire portfolio into one dashboard—reducing operating costs, streamlining management, and improving system efficiency across all locations.

Dashboard Features
KMC Commander's HTML5 dashboard provides a responsive, real-time view of your IoT network across desktops, tablets, and smartphones.

Open Device Protocols
KMC Commander communicates over these common protocols:

- *BACnet* IP
- *BACnet* MS/TP
- *Modbus* TCP
- *SNMP* V1, V2C, and V3
- More coming soon

KMCAFMS™
Powered By KMCConquest®

A revolution in airflow measurement technology

The KMC Airflow Measurement System (AFMS) provides accurate and repeatable measurements for outside, supply, and return airflow and is unaffected by ambient weather, airborne pollutants, or bends and restrictions in mechanical air delivery systems.

How It Works

The KMC AFMS uses Characterized Airflow Performance® (CAP) to deliver accurate airflow readings. During setup, the system positions dampers at specific points and samples OA/RA/MA temperatures to create a CAP curve following *ASHRAE 111*.

Once characterized, the KMC AFMS measures airflow from the performance curve—without needing continuous temperature sensing—while still allowing those sensors to be used for FDD and quick recalibration.

KMC AFMS: Smarter by Design

The KMC AFMS installs effortlessly—without the space or airflow constraints of traditional systems. It fits anywhere, from compact packaged units to large built-up air handlers.

By delivering multiple airflow measurements, it helps ensure optimal equipment performance and supports advanced, high-efficiency control strategies.

The result: smarter equipment, reliable airflow data, and built-in diagnostics that keep systems performing at their best.

Reliable

Accurate and repeatable airflow with Integrated Fault Detection and Diagnostics (FDD) for energy efficiency

Versatile

Installs on nearly all equipment types, integrates with factory unit controls and the Building Management System (BMS)

Worry-Free

Integrated FDD ensures lasting accuracy and reliability — with no ongoing maintenance or recalibration required

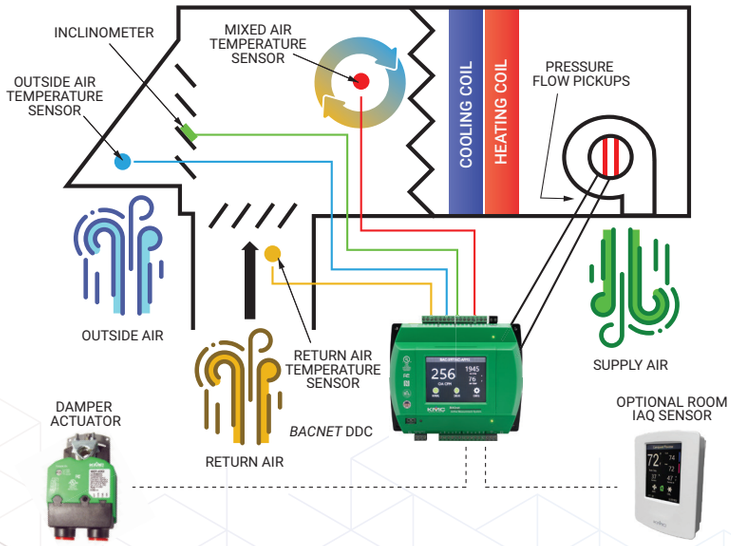

KMCConquest®
Automation Hardware

The latest in building automation

KMC Conquest is a fully programmable series of *BACnet* controllers and sensors for building automation and HVAC systems.

Great flexibility and control

- *BTL*-listed (B-BC) automation hardware for use across a variety applications
- Ethernet/IP (dual port) or MS/TP communications
- KMC Connect Lite™ mobile app enables device addressing via NFC, saving up to 75% of pre-commissioning time

BAC-5971
KMC Conquest
General Purpose with Display

BAC-5900
KMC Conquest
General Purpose

BAC-9300
KMC Conquest
Unitary

BAC-5051AE
KMC Conquest Router

BAC-9000
KMC
Conquest VAV

BAC-190000
KMC FlexStat™

STE-9000
KMC Conquest
NetSensor®

More Capability, Fewer Components

Fewer part numbers, broader coverage – One hardware platform supports more applications and system types.

Built-in, factory-configured applications speed setup and reduce engineering time.

Integrated trending, scheduling, and alarming — no add-ons required.

NFC-enabled commissioning allows pre-configuration via smartphone while unpowered using KMC Connect Lite.

All-in-one NetSensor room sensor combines temperature, humidity, CO_2, and occupancy for faster installation and richer system data.

KMC Connect™
Hardware Configuration Software

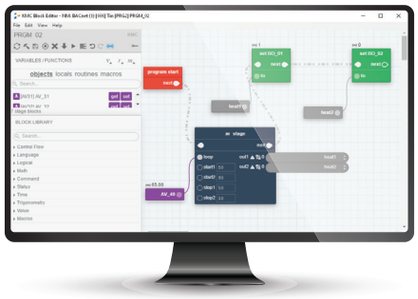

Full-featured configuration software

KMC Connect is a configuration software tool with which you can configure *BACnet* controllers for a building automation system.

Key time-saving features of KMC Connect:

- Build jobs offline and then deploy them on-site with a single click
- Use the wizards to quickly and easily configure alarms, schedules, and trends on native *BACnet* devices
- Choose from a library of hundreds of HVAC applications, with preconfigured set-ups for KMC Controls controllers and accompanying documentation
- Set up continuous commissioning with the Audit tool
- Quickly balance VAV units with the VAV Balancing tool
- Block and Line editor for Control Basic programming

KMC TotalControl®
Automation Software

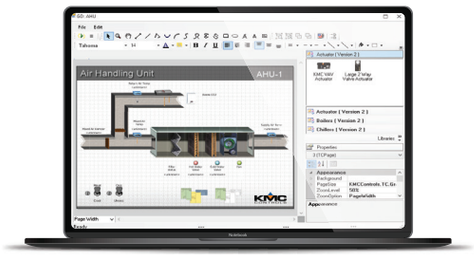

Complete building services solution

The KMC TotalControl 4.0 Building Services applications are a combined software solution for providing facility management. This set of services collects, stores, and routes data between a building automation network and an operator interface or workstation.

Once configured with KMC TotalControl Design Studio, operators need only an internet browser for daily building management.

- *BTL*-certified Advanced Operator Workstation with trends, alarms, and schedules
- Automatic graphic page display with optional kiosk functionality
- Internet browser accessibility

---

niagara4

Power at your convenience

Niagara is a building management system that utilizes an HTML framework to connect embedded devices or systems across a large number of manufacturers and communication protocols. Through the Building Geniuses at KMC Controls, you can order *Niagara*, drivers, licenses, and *JACE* hardware.

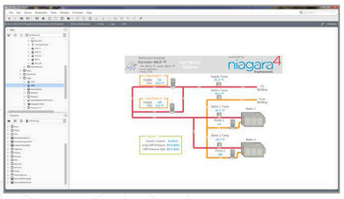

KMC AppStat™

Application specific controller

Power and flexibility all in one package

The KMC AppStat combines the power of a space-mounted equipment controller with the convenience of built-in temperature, humidity, and motion sensors. The controllers include a wide range of factory-supplied programs for the following applications.

- 2 and 4 pipe fan coil units
- Roof top units
- Heat pump units
- Packaged and split unitary systems

Additional benefits include:

- Stand-alone operation requiring no configuration software
- Perfect form factor for new or retrofit applications
- Bright, full color display

SimplyVAV™

Take the complexity out of it

SimplyVAV controllers provide an all-in-one solution for a wide range of VAV applications. Integrated actuators, built-in airflow sensing, and factory applications simplify new and retrofit installations.

Setup, commissioning, and balancing are performed directly from an STE-8001 digital sensor—no programming or software required. All models are *BACnet* MS/TP–ready and *BTL*-listed.

Key benefits

- Easy to install, set up, and balance
- Multiple models to fit any need or budget
- *BTL*-listed

KMC Converge™

Automation Software Built on Niagara

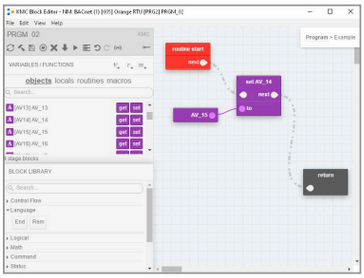

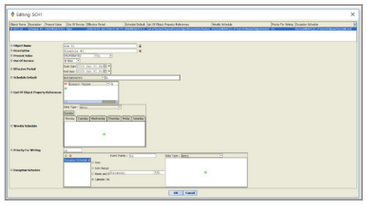

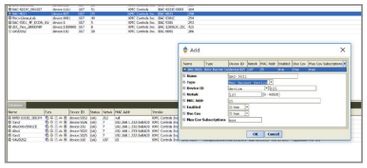

Bring complete KMC Controls customization to *Niagara*

KMC Converge is a software module used with *Niagara Workbench* to customize *BACnet* hardware and deploy KMC Control's application library. You can also use KMC Converge for offline programming with either Line or Block Programming. Using the audit tool, you can capture a baseline for a controller configuration and detect changes in the future.

KMCDome™
Cybersecurity Powered by Veridify

Why KMC Dome?

Zero Trust Security
Ultimate protection for connected systems.

Advanced Encryption
Keeps data and devices securely locked down.

Real-Time Alerts
Respond fast and reduce exposure.

Protects New & Legacy OT Systems
Modernizes security without replacing equipment.

No IT Expertise Needed
Simple to deploy, simple to manage.

Strengthen Your Cyber Resilience

KMC Dome is the next step in protecting your building systems. Boost confidence, reduce risk, and upgrade your security posture—without the complexity.

Smart Protection for Smarter Buildings

DIA | KMC Dome Interface Appliance

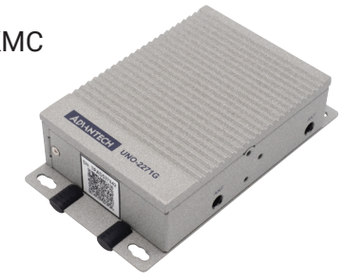

The DIA protects and manages all KMC Dome-enabled and *Dome Sentry* devices on-site, creating a secure Zero Trust environment where only verified devices can communicate.

Key Benefits

- Single, encrypted connection to the cloud
- Controls which devices can join the secure network
- Automatically manages device credentials
- Continuously verifies device trust
- Sends security logs to the KMC Dome Dashboard for monitoring

Dome Sentry | Retrofit Cybersecurity Appliance

Dome Sentry brings modern cybersecurity to older systems without replacing equipment. It encrypts all communication and ensures devices only interact with trusted counterparts.

Key Benefits

- Fast, zero-touch installation
- Secure mutual authentication
- Compatible with multiple protocols and systems
- Built-in data logging for insights
- Crypto-agile, future-ready security
- Secures TCP/IP, *BACnet*/IP, and *Modbus*/TCP to reduce risk and protect investments

KMCConsulting™
Trusted Advisors

Strategy & Process Consulting Services

KMC Consulting offers practical and straightforward insights to help your organization leverage data and best practices to drive business transformation, lower risk, and maximize value. Take your business to the next level.

KMC Consulting will work with you to develop strategies that will help you maximize your performance, which may include the following:

- Quality Culture Assessment
- Cost Segregation Study
- Cyber-Physical Risk Vulnerability Assessments
- Root-Cause Analysis
- Business Process Mapping
- Business Process Stress Testing
- Business Process Improvement
- Business Process Implementations

INTRODUCING KMC Secure Connected Solutions™

A Stronger, Smarter Standard for Building Automation

KMC Controls' new standard for building automation security and integration — strengthening operational resilience, reducing risk, and enabling scalable digital transformation across OT environments. Secure Connected Solutions offers, but is not limited to:

Easier Maintenance
A consistent system structure simplifies troubleshooting and long-term upkeep.

Better Interoperability
Shared naming and configuration rules ensure smooth integration across systems.

Stronger Security
Standardized security settings reduce vulnerabilities and shrink the attack surface.

BuildingGeniuses®

KMC Controls, 19476 Industrial Drive, New Paris, IN 46553 / 877-444-5622 / Fax: 574-831-5252 / www.kmccontrols.com

All third-party logos are trademarks/service marks of their respective owners, who have not sponsored or approved any of this content.

©Copyright 2026 KMC Controls, Inc.

Printed in U.S.A. 2601

Niagara Product Selection Guide

For KMC Supervisor, Workbench, Converge, GFX, and JACE

Do you find this document helpful? Click here to share feedback and help us improve:
Give Feedback

CONTENTS

Introduction 1
- What Is Niagara 4? 1
- What Is KMC Niagara Supervisor? 1
- What Is KMC Niagara Workbench? 2
- What Is KMC Converge? 2
- What Is KMC Converge GFX? 2
- What Is KMC Converge Training? 2
- What Is -3P? 2
- What Is a Host ID and Win ID? 2
- What Is the Niagara NiCS? 2
- Where Are the KMC Software Downloads? 2
- What Is a JACE? 2

KMC Niagara (Software) Products 3
- KMC Converge (Tool Set for KMC Workbench) 3
- KMC Converge (Tool Set for Third-Party Workbench) 3
- KMC Converge GFX (KMC JACE-Hosted Graphics) 3
- KMC Converge GFX (Third-Party JACE-Hosted Graphics) 3
- KMC Converge GFX (KMC Supervisor-Hosted Graphics) 3
- KMC Converge GFX (Third-Party Supervisor Hosted) 3

KMC Niagara (Software) Products (continued) 4
- KMC Niagara N4 Workbench with Converge (Office DEMO) 4
- KMC Niagara Supervisor (for Windows) 4

KMC JACE (Hardware) Products 4
- JACE 8000 Series 4
- JACE 9000 Series 4
- Popular JACE Accessories 5

KMC Setup Tools for KMC Conquest Controllers 5

Support 5

INTRODUCTION

What Is Niagara 4?

Niagara is an open, Java-based framework that can connect almost any embedded device or system—regardless of manufacturer or communication protocol. It includes a graphical toolset that enables users to build applications in a drag-and-drop environment and easily manage assets using a standard Web browser.

Niagara 4 (or N4) is the latest implementation of the framework, with an HTML5 interface, enhanced security, and other features.

What Is KMC Niagara Supervisor?

The KMC **N4** Supervisor, which hosts KMC Workbench, is a flexible network server software application used in environments where multiple Niagara 4-based JACE controllers are networked together. The KMC N4 Supervisor can also communicate with remote JACE controllers. The N4 Supervisor serves real-time graphical information to standard web-browser clients and provides server-level functions such as centralized data logging, archiving, alarming, trending, master scheduling, system-wide database management, and integration with enterprise software applications.

NOTE: A **software maintenance agreement** (**SMA**) must also be purchased with all N4 supervisors (P/N SUP-xxx-SMA-xxx) and JACE controllers (P/N SMA-xxx-xxx).

What Is KMC Niagara Workbench?

KMC Workbench is an engineering tool from which the database is developed and various other engineering actions, such as controller configuration and programming, are conducted.

What Is KMC Converge?

KMC Converge adds functionality to Niagara for setting up BACnet controllers from KMC Controls. KMC Converge is a tool set that runs in Niagara Workbench. It is used to configure and deploy KMC's Application Library and customize programmable KMC BACnet controllers.

KMC Converge is installed via two modules: kmcBACnet (controller programming) and kmcConverge (deployment service).

NOTE: See also the **data sheet and other documentation for KMC Converge**.

What Is KMC Converge GFX?

KMC Converge GFX is a tool set used to configure and generate responsive HTML5 graphics from KMC Workbench or any other open brand of the Niagara Framework. Converge GFX automatically generates an HTML5 web interface for controllers deployed using KMC's Application Library. The interface may be further customized with additional points and navigation. GFX graphics are created in Workbench and hosted on a station. Converge GFX is in addition to the standard graphics included with Niagara.

KMC Converge GFX is installed via one module: kmcConvergeGFX.

What Is KMC Converge Training?

KMC Controls offers training in using KMC Converge. To take a training class, log in to the **KMC Controls website** and navigate to the **Training** section for a schedule of classes and additional information.

What Is -3P?

The "-3P" in a product part number designates "Third Party". The "-3P" products can be licensed to open Niagara products that were sourced from Niagara vendors other than KMC.

What Is a Host ID and Win ID?

The Host ID for a JACE controller is determined at the factory, and a corresponding license file for that specific JACE is stored on a licensing server. The Win ID is the computer/server version of the Niagara Host ID. The Win ID is generated by the Supervisor/Workbench software at installation.

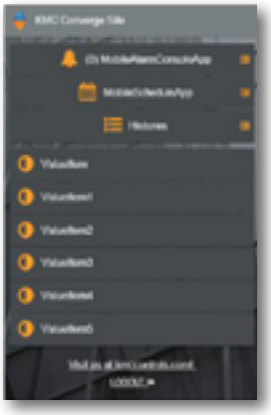

A page created in KMC Converge GFX

All Supervisor/Workbench licenses are bound to that Win ID just as all JACE licenses are bound to the Host ID. (For more information, see Niagara documentation.)

What Is the Niagara NiCS?

The Niagara Compatibility Statement (NiCS) is a licensing model in Niagara that provides OEMs with the ability to define the various levels and types of Niagara interoperability their products will support. The statement can limit what tools can run on a station or what Workbench software can connect to a station. (For more information, see Niagara documentation.)

As an open-branded OEM, KMC Controls is not restricted by the brand of station or workbench for Niagara connections.

Where Are the KMC Software Downloads?

These software modules can be downloaded (after logging in) from the KMC web site:

- KMC Converge and GFX (contains Converge and GFX modules)
- KMC Workbench Supervisor (contains all KMC Niagara product modules)

The files are contained within the **Software** section under **Documents**. The modules require the appropriate licenses and certificates emailed from KMC Customer Service to operate.

What Is a JACE?

A JACE (Java Application Control Engine) is a compact, embedded controller/server device that provides connectivity to building automation systems via the Niagara framework. A JACE combines integrated control, supervision, data logging, alarming, scheduling, and network management functions with Internet connectivity and web-serving capabilities in a small, compact platform. A JACE makes it possible to control and manage external devices over the Internet and present real-time information to users in web-based graphical views.

See **KMC JACE (Hardware) Products on page 4** for details.

KMC NIAGARA (SOFTWARE) PRODUCTS

KMC Converge (Tool Set for KMC Workbench)

P/N: CONVERGE

Converge application only. Order to add to an existing **KMC** Workbench.

Requirements:

- Workbench.
- License requires Host ID or Win ID.

AFTER purchasing:

- Download KMC Converge and GFX Modules from the website and install KMC BACnet and KMC Converge.jar files.
- KMC emails relevant licenses and certificates to you.

KMC Converge (Tool Set for Third-Party Workbench)

P/N: CONVERGE-3P

Converge application only. Order to add to an existing **Third-Party** Workbench.

Requirements:

- Workbench.
- License requires Host ID.

AFTER purchasing:

- Download KMC Converge and GFX Modules from the website and install KMC BACnet and KMC Converge.jar files.
- KMC emails relevant licenses and certificates to you.

KMC Converge GFX (KMC JACE-Hosted Graphics)

P/N: CONVERGE-GFX

HTML5 graphics toolset for a **KMC JACE**, hosted on the JACE.

Requirements:

- Workbench.
- JACE hardware license requires Host ID or Serial Number.
- Soft JACE license requires Win ID.

AFTER purchasing:

- Download KMC Converge and GFX Modules from the website and install KMC BACnet, Converge, and GFX .jar files.*
- KMC emails relevant licenses and certificates to you.

***NOTE:** Converge must be loaded into the station (but it does not need to be licensed) for GFX to function.

KMC Converge GFX (Third-Party JACE-Hosted Graphics)

P/N: CONVERGE-GFX-3P

HTML5 graphics toolset for a **Third-Party JACE**, hosted on the JACE.

Requirements:

- JACE hardware license requires Host ID or Serial Number.
- Soft JACE license requires Win ID.

AFTER purchasing:

- Download KMC Converge and GFX Modules from the website and install KMC BACnet, Converge, and GFX .jar files.*
- KMC emails relevant licenses and certificates to you.

***NOTE:** Converge must be loaded into the station (but it does not need to be licensed) for GFX to function.

KMC Converge GFX (KMC Supervisor-Hosted Graphics)

P/N: CONVERGE-GFX-SUP

HTML5 graphics toolset for a **KMC Supervisor** (Workbench server), hosted on the Supervisor.

Requirements:

- Supervisor (such as KMN-S-AX-3, KMN-S-AX-100, KMN-S-AX-ENT, KMN-S-N4-1, KMN-S-N4-10, KMN-S-N4-100, KMN-S-N4-2, KMN-S-N4-3, or KMN-S-N4-UNL).
- Workbench.
- License requires Win ID.

AFTER purchasing:

- Download KMC Converge and GFX Modules from the web site and install KMC BACnet, Converge, and GFX .jar files.*
- KMC emails relevant licenses and certificates to you.

***NOTE:** Converge must be loaded into the station (but it does not need to be licensed) for GFX to function.

KMC Converge GFX (Third-Party Supervisor Hosted)

P/N: CONVERGE-GFX-SUP-3P

HTML5 graphics tool set for a **Third-Party Supervisor** (Workbench server), hosted on the Supervisor.

Requirements: License requires Win ID.

KMC NIAGARA (SOFTWARE) PRODUCTS (CONTINUED)

AFTER purchasing:

- Download KMC Converge and GFX Modules from the website and install KMC BACnet, Converge, and GFX .jar files.*
- KMC emails relevant licenses and certificates to you.

***NOTE:** Converge must be loaded into the station (but it does not need to be licensed) for GFX to function.

KMC Niagara N4 Workbench with Converge (Office DEMO)

P/N: KMN-S-ENG-DEMO

Office Demo is a technician's Workbench tool to create stations on a local PC. All Tridium and KMC drivers and services are licensed, including GFX.

NOTE: After the SI provides the N4 certification document, N4 functionality is activated.

Requirements: License requires Win ID.

AFTER purchasing:

- Download KMC Workbench N4 from the website and run the setup.
- KMC emails relevant licenses and certificates to you.

KMC Niagara Supervisor (for Windows)

This should be purchased to install a JACE or Supervisor on projects.

P/N:

- KMN-S-N4-0: N4 Supervisor for 0 Niagara devices
- KMN-S-N4-1: N4 Supervisor for 1 Niagara devices
- KMN-S-N4-2: N4 Supervisor for 2 Niagara devices
- KMN-S-N4-3: N4 Supervisor for 3 Niagara devices
- KMN-S-N4-10: N4 Supervisor for 10 Niagara devices
- KMN-S-N4-100: N4 Supervisor for 100 Niagara devices
- KMN-S-N4-UNL: N4 Supervisor for unlimited Niagara devices

Requirements: Licensed to end user computer/server Win ID number.

NOTE: A **software maintenance agreement** (**SMA**) must also be purchased with all N4 supervisors (P/N **SUP-xxx-SMA-xxx**) and JACE controllers (P/N **SMA-xxx-xxx**).

Device Support: SUP-DEVICE-xxx N4 Supervisor Device Pack (options from 10 to 1,000 devices)

AFTER purchasing:

- Download KMC Workbench N4 from the website and run the setup.
- KMC emails relevant licenses and certificates to you.

KMC JACE (HARDWARE) PRODUCTS

JACE 8000 Series

P/N:

- KMN-J-8005: JACE 8000 licensed for up to 5 devices (250 points)
- KMN-J-8010: JACE 8000 licensed for up to 10 devices (500 points)
- KMN-J-8025: JACE 8000 licensed for up to 25 devices (1,250 points)
- KMN-J-8100: JACE 8000 licensed for up to 100 devices (5,000 points)
- KMN-J-8200: JACE 8000 licensed for up to 200 devices (10,000 points)

Requirements: Niagara 4

NOTE: A **software maintenance agreement** (**SMA**) must **also be purchased** with all N4 supervisors (P/N **SUP-xxx-SMA-xxx**) and JACE controllers (P/N **SMA-xxx-xxx**).

JACE 8000

JACE 9000 Series

P/N:

- KMN-J-934: JACE 9000 licensed for 0 devices/0 points (includes one (1) IO-R-34)
- KMN-J-9005: JACE 9000 licensed for up to 5 devices (250 points)
- KMN-J-9010: JACE 9000 licensed for up to 10 devices (500 points)

JACE 9000

Feedback? Give yours **here**.

- KMN-J-9025: JACE 9000 licensed for up to 25 devices (1,250 points)
- KMN-J-9100: JACE 9000 licensed for up to 100 devices (5,000 points)
- KMN-J-9200: JACE 9000 licensed for up to 200 devices (10,000 points)

Requirements: Niagara 4.13

NOTE: A **software maintenance agreement** (**SMA**) must **also be purchased** with all N4 supervisors (P/N **SUP-xxx-SMA-xxx**) and JACE controllers (P/N **SMA-xxx-xxx**).

Optional JACE 8000 and JACE 9000 device upgrades

- **DEVICE-1**: One device (50 points) upgrade
- DEVICE-10: Up to 10 devices (500 points) upgrade
- DEVICE-25: Up to 25 devices (1,250 points) upgrade
- DEVICE-50: Up to 50 devices (2,500 points) upgrade

Popular JACE Accessories

- WPM-8000: Universal power supply for JACE 8000 and JACE 9000 controllers
- NPB-8000-2X-485: Add-on RS-485 dual-port module for JACE 8000 and JACE 9000 controllers
- NPB-8000-LON: Add-on LON single-port FTT10A module for JACE 8000 and JACE 9000 controllers
- IO-R-16: JACE 8000 and JACE 9000 16 point IO
- IO-R-34: JACE 8000 and JACE 9000 34 point IO

See the KMC Controls website for many other accessories.

See product data sheets for more information.

KMC SETUP TOOLS FOR KMC CONQUEST CONTROLLERS

The following table shows how KMC Converge modules fit into the family of tools for configuring, programming, and creating web page graphics for KMC Conquest controllers.

SETUP PROCESS			KMC CONTROLS TOOL
Configuration	**Programming (Control Basic)**	**Web Page Graphics***	
✓			Conquest NetSensor
✓			Internal configuration web pages in Conquest Ethernet "E" models**
✓			KMC Connect Lite™ (NFC) app***
✓	✓		KMC Connect™ software
✓****	✓****	✓	TotalControl™ software
✓	✓		KMC Converge™ module for Niagara Workbench
		✓	KMC Converge **GFX** module for Niagara Workbench

*Custom graphical user-interface web pages can be hosted on a remote web server, but not in the controller.

Conquest Ethernet-enabled "E" models with the latest firmware can be configured with an HTML5 compatible web browser from pages served from within the controller. For information, see the **Conquest Ethernet Controller Configuration Web Pages Application Guide.

***Near Field Communication via enabled smart phone or tablet running the KMC Connect Lite app.

****Full configuration and programming of KMC Conquest controllers is supported starting with TotalControl ver. 4.0.

SUPPORT

For more information, see the data sheets and other support documents on the respective product series pages on the KMC Controls web site (**www.kmccontrols.com**).

© 2026 KMC Controls, Inc.

Conquest™ Selection Guide

Controllers, Sensors, and Accessories

APPLICATIONS AND MODELS

APPLICATIONS	MODELS*	APPLICATIONS	MODELS*
AHU (Air Handler Unit)	**BAC-5901** and **BAC-93x1**	Lighting	**STE-92x1/95x1** and **BAC-5901**
Boiler	**BAC-5901**	Occupancy control	**STE-92x1/95x1** and any controller
CAV (Constant Air Volume)	**BAC-90x1**, **BAC-9311**, and **STE-9xx1**	Other HVAC	**BAC-5901**
Chiller	**BAC-5901**	Pump	
Chilled beam	**BAC-5901**, **BAC-9301**, and **STE-9x21**	RTU (Roof Top Unit)	**BAC-5901**, **BAC-9301**, and **STE-9xx1**
Cooling tower	**BAC-5901**	Static pressure monitoring/ control (RTU/HPU)	**BAC-9311**
DCV (Demand-Control Ventilation)	**STE-93x1/95x1** and any controller	Supply/exhaust tracking	**BAC-9001**, **TSP-8003**, and **STE-9xx1**
FCU (Fan Coil Unit)	**BAC-9301** and **STE-9xx1**	Unit ventilator	**BAC-5901**, **BAC-9301**, and **STE-9xx1**
HPU (Heat Pump Unit)	**BAC-9301**, **BAC-5901**, and **STE-9xx1**	VAV (Variable Air Volume)	**BAC-90x1**, **BAC-9311**, **TSP-8003**, and **STE-9xx1**
Humidity control	**STE-9x21**, **BAC-5901**, and **BAC-9301**	Ventilation control	**STE-93x1/95x1** and any controller

*The most typical models are shown for an application. The controllers are fully programmable, and any controller with sufficient I/O can be adapted to the application. Programming and custom graphics requires KMC Connect™, TotalControl, and/or the KMC Converge™ app for Niagara^AX Workbench, but basic configuration for standard applications can be done using just an STE-9000 series NetSensor® or the KMC Connect Lite™ app or software. See **Setup Tools (Configuring, Programming, and Designing) on page 7**. See also **Accessories on page 6**.

BAC-5900 SERIES GENERAL PURPOSE CONTROLLERS (B-AAC)

APPLICATIONS	INPUTS*	OUTPUTS*	FEATURES			MODEL
			Real Time Clock (RTC)	Ethernet Port	MS/TP Port	
AHU, chillers, boilers, cooling towers, pumps, lighting, FCU, HPU, RTU, unit ventilators, other HVAC	10 total: • 2 analog (temperature sensor port) • 8 universal inputs (software configurable as analog, binary, or accumulator on terminals)	8 universal: • Software configurable as analog or binary • Override boards give additional options**	✔		✔	BAC-5901C
				✔		BAC-5901CE

*Up to four (8 x 8) CAN-5901 I/O expansion modules can be used with BAC-5900 series controllers to provide up to (internal and external) 42 inputs and 40 outputs.

**HPO-6700 series output override board series provide (triac, NC/NO relays, 4–20 mA, adjustable 0–10 VDC) options for devices that cannot be powered from a standard universal output. The boards can also be used with the CAN-5901.

These controllers can be used with the following types of equipment:

- Air handling units
- Boilers
- Chilled beams
- Chillers
- Cooling towers
- Fan coil units
- Heat pump units
- Pumps
- Roof top units
- Unit ventilators
- Other HVAC and building automation system equipment

Requires custom programming in the controller. For more information, see the **BAC-5900 Series** product page.

See also **Accessories on page 6**.

CAN-5900 SERIES I/O EXPANSION MODULES

APPLICATIONS	INPUTS	OUTPUTS*	MODEL
I/O Expansion	8 universal (software configurable as analog, binary, or accumulator)	8 universal • Software configurable as analog or binary • Override boards give additional options**	CAN-5901

*Up to four (8 x 8) CAN-5901 I/O expansion modules can be used with BAC-5900 series controllers to provide up to (internal and external) 42 inputs and 40 outputs.

**HPO-6700 series output override board series provide (triac, NC/NO relays, 4–20 mA, adjustable 0–10 VDC) options for devices that cannot be powered from a standard universal output. The boards can also be used with the CAN-5901.

These input/output expansion modules are designed for use with BAC-5900 series controllers. Multiple CAN-5901s can be connected to a controller via a CAN bus. For applications, see the BAC-5900 series section above. See also the **CAN-5900 Series I/O Expansion Modules** product page.

BAC-9000 SERIES VAV CONTROLLER-ACTUATORS (B-AAC)

APPLICATIONS	INPUTS	OUTPUTS	FEATURES				MODEL
			Air Pressure Sensor	Real Time Clock	MS/TP	Ethernet	
Pressure-**independent** VAV, cooling/heating with fan and reheat; CAV	8 total: • 1 internal actuator position feedback • 1 integrated air pressure sensor (except BAC-9021) • 2 analog (temperature sensor port) • 4 software-configurable universal inputs (terminals)	9 total: • 2 internal triacs (actuator motor control) • 4 external triacs (terminals) • 3 universal outputs (0–12 VDC on terminals)	✔		✔		BAC-9001
				✔		✔	BAC-9001CE
Pressure-**dependent** VAV					✔		BAC-9021

VAV application options for these controllers include:

- Pressure independent or dependent VAV
- Cooling only and with changeover
- Staged, modulated, floating, or time-proportional reheat
- Series or parallel fan control
- Dual duct (with TSP-8003 actuators, see below)
- Supply/exhaust tracking (with TSP-8003 actuators)
- CAV (Constant Air Volume)

For installations with a BACnet building automation system, these easily integrated controllers signal demands for higher static duct pressure, cooler or warmer supply air, and other diagnostics for AHU optimization. For more information, see the **BAC-9000 Series** product page. See also **Accessories on page 6**.

TSP-8003 (DUAL DUCT) TRI-STATE ACTUATOR WITH PRESSURE SENSOR

The TSP-8003 is a 40 in-lb. tri-state actuator with a differential air pressure sensor, typically used in Conquest VAV dual-duct applications as a secondary actuator. The TSP-8003 connects directly to a BAC-9001 VAV controller-actuator for easy installation. Application options include:

- Dual duct VAV or CAV
- Bypass damper*
- Economizer damper*
- Building pressure control damper*
- Supply/exhaust tracking*

***NOTE:** Requires custom programming in the controller.

For more information, see the **TSP-8003** product page.

BAC-9300 SERIES UNITARY CONTROLLERS (B-AAC)

APPLICATIONS	INPUTS	OUTPUTS	FEATURES				MODEL
			Air Pressure Sensor (Input)	Real Time Clock (RTC)	Ethernet Port	MS/TP Port	
RTU, HPU, FCU, AHU, and unit ventilator	8 total standard: • 2 analog (temp. sensor port) • 6 universal inputs (software configurable as analog, binary, or accumulator on terminals)	10 total: • 6 triacs (binary) • 4 universal (software configurable as analog or binary)				✔	BAC-9301
				✔		✔	BAC-9301C
				✔	✔		BAC-9301CE
VAV/CAV (with external tri-state actuator), RTU/ HPU static pressure monitoring/control			✔			✔	BAC-9311
			✔	✔		✔	BAC-9311C
			✔	✔	✔		BAC-9311CE

These controllers can be used with the following equipment:

- Air handling units
- CAV or VAV with external actuator
- Chilled beams*
- Fan coil units
- Heat pump units
- Roof top units
- Unit ventilators

For more information, see the **BAC-9300 Series** product page.
See also **Accessories on page 6**.

***NOTE:** Requires custom programming in the controller.

STE-9000 SERIES NETSENSORS (DIGITAL ROOM SENSORS)

APPLICATIONS: TEMPERATURE CONTROL PLUS...	INTEGRATED SENSORS*				MODEL**
	Temp.	Humidity	Motion	CO_2	
(Temperature control only)	✔				STE-9001W
Humidity control for dehumidification/humidification		✔			STE-9021W
Enhanced occupancy-based control (lighting/setback/self-learning)			✔		STE-9201W
Humidity and occupancy control		✔	✔		STE-9221W
DCV (Demand-Control Ventilation)				✔	STE-9301W
Humidity and ventilation control		✔		✔	STE-9321W
Occupancy and ventilation control			✔	✔	STE-9501W
Humidity, occupancy, and ventilation control		✔	✔	✔	STE-9521W

*All units have a temperature sensor (standard). See above for additional sensor options.

A **W at the end of the model number indicates a **white** case. To order the sensor with **light almond** color instead of white, drop the W on the end of the model number (e.g., STE-9001W is white and STE-9001 is light almond).

Conquest STE-9000 series NetSensors are wall-mounted digital space temperature sensors designed for use with KMC BAC-5900/9000/9300 series controllers. Key features include the following:

- Up to four sensors in a single package minimizes labor, wiring, and wall space, while optional humidity, motion, and CO_2 sensors allow expanded energy-efficient control of humidity, temperature setback, lighting, and ventilation
- A user-friendly three-button integrated operator interface provides occupant viewing and adjusting of setpoints
- It installs permanently as a room sensor or temporarily as a service tool; as a service tool, it commissions controllers without software, configures communication and application settings, and balances VAV air flow
- An HPO-9001 NetSensor distribution module allows up to eight STE-9000 series NetSensors to be linked to one controller or allows one **STE-6010/6014/6017** analog temperature sensor to be connected with up to seven NetSensors

For more information, see the **STE-9000 Series** product page.

NOTE: STE-6010/6014/6017 analog temperature sensors can be connected to a controller in the place of an STE-9001W after the connected controller is configured. See **Accessories on page 6**.

STE-9221W
Temperature/Humidity/Motion Sensing
with Full Control/Configuration

STE-6017W10
Temperature Sensing (Only)
with Setpoint Dial and Override Button

ACCESSORIES

NOTE: For accessory details, see the respective product data sheets and installation guides.

Actuators

NOTE: See also the selection chart in the Connecting a Remote Actuator to a BAC-9311 section of the **KMC Conquest Controller Application Guide**.

MEP-4xxx	Actuators, 25 to 90 in-lb., fail-safe and non-fail-safe
MEP-7xxx	Actuators, 180 and 320 in-lb., fail-safe and non-fail-safe
TSP-8003	Dual duct actuator (for BAC-9001)—see **TSP-8003 (Dual Duct) Tri-State Actuator with Pressure Sensor on page 3**

Expansion Module

CAN-5901	I/O expansion module (for BAC-5900 series)—see **CAN-5900 Series I/O Expansion Modules on page 2**

Misc. Hardware

HCO-1102	Steel control enclosure, 10.1 x 2.4 x 7.1 inches (257 x 62 x 181 mm)
HPO-0055	Replacement network bulb assembly (pack of 5)
HPO-0063	Replacement output jumper, 2-pin (pack of 5)
HPO-9901	Controller replacement parts kit with terminal blocks (1 gray, 1 black, 2 green 3-terminal, 4 green 4-terminal, 2 green 5-terminal, 2 green 6-terminal) and DIN clips (2 small for router and 1 large for controllers)

Network Communications

BAC-5051E	BACnet IP, Ethernet, and (single port) MS/TP router
HPO-5551	Router technician cable kit
HPO-9003	NFC Bluetooth/USB module (fob)
HSO-9001	Ethernet cable, 50 feet
HSO-9011	Ethernet cable, 50 feet, plenum rated
KMD-5567	Network surge suppressor

Output Override Boards (for BAC/CAN-5901)

HPO-6701	Triac output w/ zero-cross switching (AC only)
HPO-6702	0–10 VDC analog with adjustable override potentiometer
HPO-6703	Relay, NO contacts (AC/DC)
HPO-6704	4–20 mA DC current loop with adjustable override potentiometer
HPO-6705	Relay, NC contacts (AC/DC)

Sensors, Analog Room

STE-6010W10	Temperature sensor, white
STE-6014W10	Sensor with rotary setpoint dial, white
STE-6017W10	Sensor with rotary setpoint dial and override button, white

NOTE: Other STE-6000 series sensors are not fully compatible with the dedicated sensor port. However, various other models can be used with the screw terminals. See the STE-6000 series data sheet for more information. For digital sensor information, see the STE-9000 series data sheet.

NOTE: To order the STE-601x sensor with **light almond color** instead of white, **replace the W on the end of the model number with a hyphen** (e.g., STE-6010W10 is white and STE-6010-10 is light almond).

NOTE: See also **STE-9000 Series NetSensors (Digital Room Sensors) on page 5**.

Sensors, Differential Air Pressure

SSS-1012	Sensor, 3-5/32 inches (80 mm) length
SSS-1013	Sensor, 5-13/32 in. (137 mm) length
SSS-1014	Sensor, 7-21/32 in. (194 mm) length
SSS-1015	Sensor, 9-29/32 in. (252 mm) length

Sensors, Digital (LCD Display) Room

HMO-10000W	White (or order HMO-10000 for light almond) mounting plate, allows mounting to horizontal 2 x 4 or 4 x 4 inch electrical boxes
HPO-0044	Replacement cover hex screw
HPO-9002	Foam insulating gasket (mounts between the black backplate and the electrical box)
HPO-9001	NetSensor distribution module
SP-001	Screwdriver (KMC branded) with hex end (for cover screws) and flat blade (for controller terminals)
STE-9000 Series	NetSensor digital room temperature sensors for viewing and configuration and optional humidity, occupancy, and CO_2 sensing—see **STE-9000 Series NetSensors (Digital Room Sensors) on page 5**

Sensors, Miscellaneous Temperature

STE-1405	DAT sensor with plenum-cable
STE-1451	OAT sensor

Transformers, 120 to 24 VAC

XEE-6111-050	50 VA, single-hub
XEE-6112-050	50 VA, dual-hub

SUPPORT

For more information, see the data sheets and other support documents on the respective product series pages on the KMC Controls web site (**www.kmccontrols.com**).

SETUP TOOLS (CONFIGURING, PROGRAMMING, AND DESIGNING)

SETUP PROCESS			KMC TOOL**
Configuration	**Programming (Control Basic)**	**Web Page Graphics***	
✔			Conquest NetSensor™
✔			KMC Connect Lite™ (NFC) app or software***
✔	✔		KMC Connect™ software
		✔	TotalControl™ software
		✔	KMC Converge™ module for Niagara^AX WorkBench

*Custom graphical user-interface web pages can be hosted on a remote web server, but not in the controller.

**For configuration and programming information, see the documents and Help systems for the respective tool.

***Near Field Communication via enabled smart phone or tablet running the KMC Connect Lite app or a PC (with an HPO-9003 NFC-Bluetooth/USB module/fob) running the KMC Connect Lite Desktop software.

© 2016 KMC Controls, Inc.

KMC Conquest™ Gen5 Controllers

Application Guide

Do you find this document helpful? Click here to share feedback and help us improve:
Give Feedback

Contents

GENERAL INFORMATION 4
- About KMC Conquest 4
- Specifications, Accessories, and Installation 4
- Video Tutorials 5
- Submittal Sheets (Diagrams and Operation) 5
- Support 6
- Important Notices 6
- Notes and Cautions 6
- Handling Precautions 6

(STATUS) INDICATORS 7
- Indicators, Connections, and Status 7
- Ready (Power/Status) LEDs (Green) 7
- MS/TP LEDs (Amber) 7
- EIO LEDs (Green) 8
- Network Isolation Bulbs (HPO-0055) 8
- Ethernet LEDs (Green and Amber) 8

CONNECTIONS (SENSORS, EQUIPMENT, NETWORKS) 9
- Input Connections (Room Sensor Port) 9
  - Dedicated Use of (STE-9000/6000) Room Sensor Port 9
  - Digital STE-9000 Series NetSensors 10
  - STE-93xx/95xx CO_2 Sensor and DCV 11
  - Analog STE-6000 Series Thermistor Sensors 12
- Input Connections (Universal, Terminals) 13
- Output Connections 14
  - Connecting Universal Outputs 14
  - Grounds Versus Switched (Relay) Commons 14
  - SC Terminals in Initial BAC-93xx Controllers 15
  - Installing Override Boards in BAC/CAN-5900 Series 16
  - Connecting a VAV Remote Actuator to a BAC-9311 19
- MS/TP Network Connections 20
  - Connections and Wiring 20
  - EOL (End of Line) Termination Switches 21
  - Temporary Network Connection 21
- Ethernet Network Connections 22
- Power (Controller) Connections 23

CONFIGURATION 25
- Configuring, Programming, and Designing 25
- NFC (Near Field Communication) 26

Passwords 26
Controller Configuration with STE-9xx1 Menus 27
Restore (RSTR) and Application/Units Selection 31
VAV Airflow Balancing with an STE-9xx1 32

RESETTING AND TROUBLESHOOTING 35
Resetting Controllers 35
Types of Reset 35
Warm and Cold Starts 35
Troubleshooting 36
Communication Issues 36
LED Indicators and Isolation Bulbs Issues 37
Hardware Issues 38
Input Issues 38
Output Issues 40
NetSensor Display is Blank 41
Power Issues 41
VAV Airflow Issues 41
Configuration, Programming, and Operation Issues 42
Web Page Issues (Ethernet Models) 43
Other Issues 43

MAINTENANCE AND UPGRADES 44
Maintenance 44
Controller Upgrades and Cross-References 44

SEQUENCES OF OPERATIONS 46
AHU (Air Handling Unit) 46
CAV (Constant Air Volume) 46
FCU (Fan Coil Unit) 47
Introduction (FCU) 48
Room Temperature Setpoints (FCU) 48
Occupancy, Motion Sensing, and Standby (FCU) 49
System Mode and Cooling/Heating Changeover (FCU) 50
Scheduling Occupancy (FCU) 50
Dehumidification Sequence (FCU) 50
Temperature Sensing Inputs (FCU) 51
Fan Status (FCU) 51
PID (Proportional Integral Derivative) Loops (FCU) 51
Valve Operation (FCU) 52
Fan Operation (FCU) 53
HPU (Heat Pump Unit) 55
Introduction (HPU) 55
Room Temperature Setpoints (HPU) 56
Occupancy, Motion Sensing, and Standby (HPU) 57
System Mode and Cooling/Heating Changeover (HPU) 58
Scheduling Occupancy (HPU) 58
Dehumidification Sequence (HPU) 58
Temperature Sensing Inputs (HPU) 59

Fan Status (HPU) ... 59
PID (Proportional Integral Derivative) Loops (HPU) ... 59
Staged Heating And Cooling (HPU) ... 60
Fan Operation (HPU) ... 60
Economizer Cooling (HPU) and DCV ... 61
Reversing Valve Action (HPU) ... 61
Auxiliary and Emergency Heat Action (HPU) ... 62
RTU (Roof Top Unit) or AHU (Air Handling Unit) ... 63
Introduction (RTU/AHU) ... 63
Room Temperature Setpoints (RTU/AHU) ... 64
Occupancy, Motion Sensing, and Standby (RTU/AHU) ... 65
System Mode & Cooling/Heating Changeover (RTU/AHU) ... 66
Scheduling Occupancy (RTU/AHU) ... 66
Dehumidification Sequence (RTU/AHU) ... 66
Temperature Sensing Inputs (RTU/AHU) ... 66
Fan Status (RTU/AHU) ... 67
PID (Proportional Integral Derivative) Loops (RTU/AHU) ... 67
Modulating Cooling and Heating (RTU/AHU) ... 67
Staged Heating And Cooling (RTU/AHU) ... 68
Fan Control (RTU/AHU) ... 69
Economizer Cooling (RTU/AHU) and DCV (RTU) ... 69
VAV (Variable Air Volume) ... 70
Introduction (VAV) ... 71
Sensors (VAV) ... 72
Room Temperature Setpoints (VAV) ... 73
Occupancy, Motion Sensing, and Standby (VAV) ... 74
Scheduling Occupancy (VAV) ... 75
PID (Proportional Integral Derivative) Loops (VAV) ... 75
Airflow Setpoints Sequence (VAV) ... 76
Cooling/Heating Changeover (VAV) ... 76
Discharge Air Temperature (DAT) Limiting (VAV) ... 76
Reheat (VAV) ... 77
Damper Operation (VAV) ... 78
Fan Operation (VAV) ... 78
Dual Duct (VAV) ... 79
Balancing Airflow (VAV) ... 79
System Diagnostics (VAV) ... 80

SYSTEM INTEGRATION AND NETWORKING ... 81
Networking ... 81
BACnet Objects List ... 81
General Notes ... 81
BAC-5900 Series (General Purpose Controller) Objects ... 82
BAC-9000 Series (VAV Controller) Objects ... 83
BAC-9300 Series (Unitary Controller) Objects ... 92

APPENDIX: K FACTORS FOR VAV ... 107

INDEX ... 108

WE VALUE YOUR FEEDBACK! ... 111

GENERAL INFORMATION

About KMC Conquest

KMC Conquest controllers are fully programmable, native BACnet controllers with integrated alarming, trending, and scheduling. This applications guide provides expanded installation information, sequences of operation, troubleshooting, and other information. For additional installation instructions, see the installation guides for the respective products.

TERMINAL COLOR CODE	
Black	24 VAC/VDC Power
Gray	MS/TP and CAN Communications
Green	Inputs and Outputs

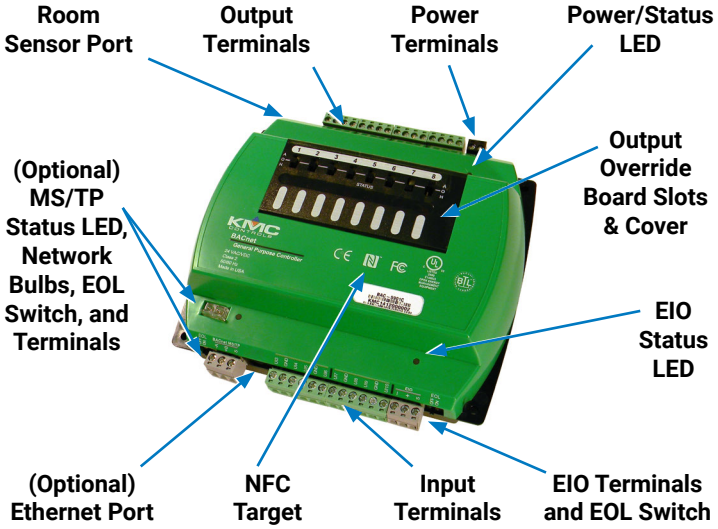

Illustration: Controller Overview (BAC-5901)

Specifications, Accessories, and Installation

See the relevant KMC Conquest documents for:

- **BAC-5900 Series BACnet General Purpose Controllers**
- **CAN-5900 Series I/O Expansion Modules**
- **BAC-9000 Series BACnet VAV Controller-Actuators**
- **BAC-9300 Series BACnet Unitary Controllers**
- **STE-9000 Series NetSensors Digital Room Sensors**
- **TSP-8003 (Dual Duct) Tri-State Actuator with Pressure Sensor**

See also the **Conquest Selection Guide** and the **BAC-5051E BACnet Router**.

For the STE-9000 Series NetSensors, see also the **Room Sensor and Thermostat Mounting and Maintenance Application Guide**.

For 4–20 ma applications, see also the **4–20 mA Wiring for Controllers Application Guide**.

Video Tutorials

See also the assorted Conquest videos on **KMC's YouTube channel**.

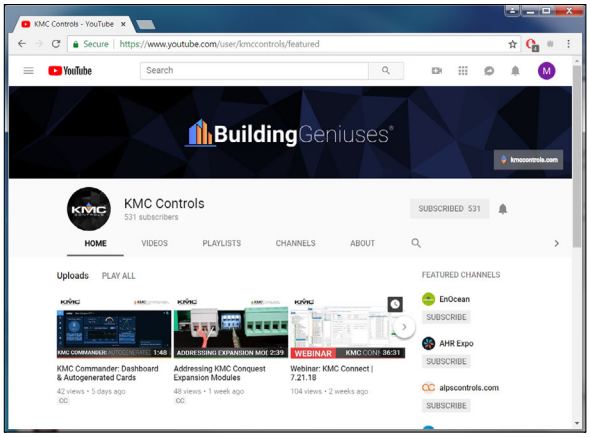

Illustration: KMC YouTube Channel Videos

Submittal Sheets (Diagrams and Operation)

BAC-9300 series unitary controllers and BAC-9000 series VAV controllers have a collection of submittal sheets for common applications available through the KMC Connect, TotalControl, or Converge configuration wizards. The submittal sheets include wiring diagrams and sequences of operation.

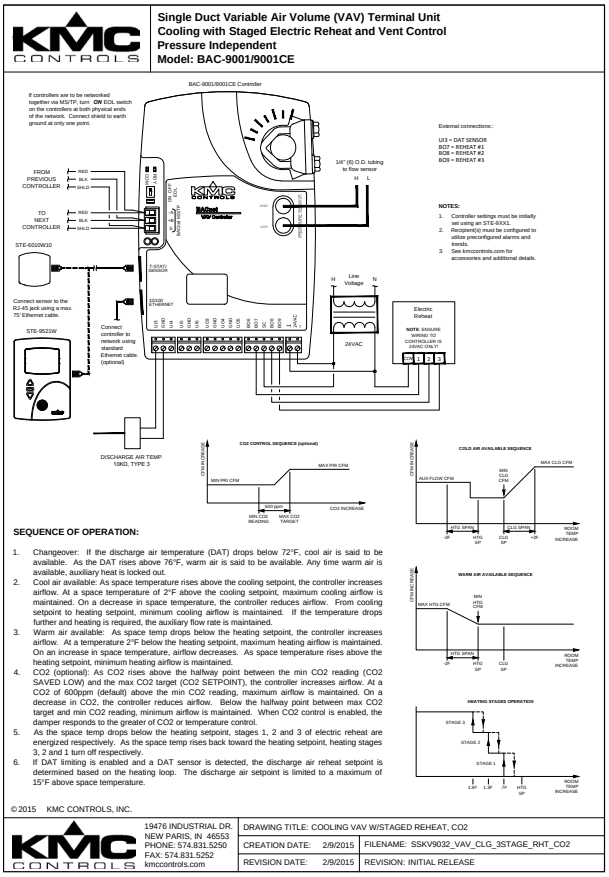

Illustration: Sample (VAV) Submittal Sheet

See the applications library in KMC Connect, TotalControl, or Converge to download the sheets.

Support

Additional resources for installation, configuration, application, operation, programming, upgrading and much more are available on the KMC Controls web site (**www.kmccontrols.com**). Log-in to see all available files.

Important Notices

KMC Controls® and NetSensor® are all registered trademarks of KMC Controls. KMC Conquest™, KMC Commander™, KMC Connect™, KMC Connect Lite™, KMC Converge™, and TotalControl™ are all trademarks of KMC Controls. All other products or name brands mentioned are trademarks of their respective companies or organizations.

All rights reserved. No part of this publication may be reproduced, transmitted, transcribed, stored in a retrieval system, or translated into any language in any form by any means without the written permission of KMC Controls, Inc.

The material in this document is for information purposes only. **The contents and the product it describes are subject to change without notice.** KMC Controls, Inc. makes no representations or warranties with respect to this document. In no event shall KMC Controls, Inc. be liable for any damages, direct or incidental, arising out of or related to the use of this document.

Specifications and design are subject to change without notice.

Notes and Cautions

NOTE: In this document, a **NOTE** provides additional information that is important.

⚠ CAUTION

In this document, a CAUTION indicates potential personal injury or equipment or property damage if instructions are not followed.

Handling Precautions

For **digital and electronic** sensors, thermostats, and controllers, take reasonable precautions to prevent electrostatic discharges to the devices when installing, servicing, or operating them. Discharge accumulated static electricity by touching one's hand to a securely grounded object before working with each device.

(STATUS) INDICATORS

Indicators, Connections, and Status

Indicators show the status of connections and the controller. Indicator actions are described below. For **troubleshooting** faulty operation, see **LED Indicators and Isolation Bulbs Issues on page 37**.

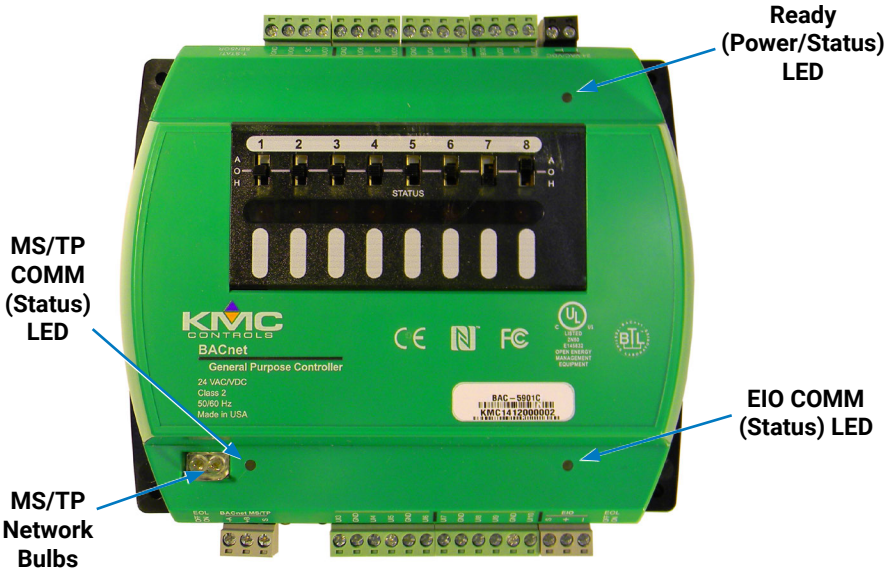

Illustration: Indicators (BAC-5901C)

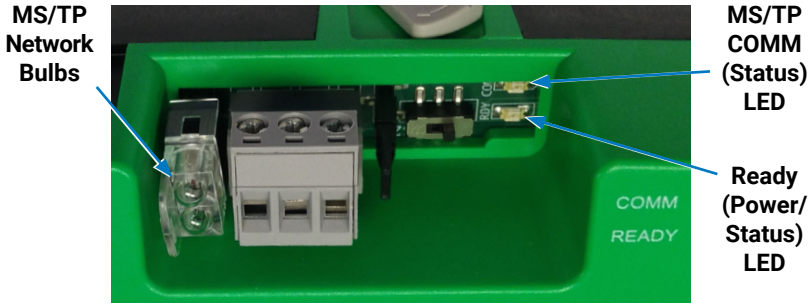

Illustration: Indicators (BAC-9001C)

Ready (Power/Status) LEDs (Green)

Within a few seconds after power is first applied, the green Ready (power/status) LED near the power terminals will begin flashing (on for a second and then off for a second) if the device is functioning normally.

MS/TP LEDs (Amber)

The (optional) MS/TP network has an amber LED that flickers as it receives and passes the token during communication with the network. When the controller is powered up (but not communicating on the MS/TP port), these amber LEDs will flash slowly, about once per second. When the MS/TP port establishes communications with the network, the amber LED for that MS/TP port will flash rapidly (multiple times a second) as it receives and passes the token.

EIO LEDs (Green)

For BAC-5900 series controllers with connected CAN-5900 series expansion modules, the EIO (Expansion Input Output) network (also known as a CAN bus) has a green LED (on each end) that flickers as it receives and passes the token during communication with the network. See the **CAN-5900 Series Installation Guide** for more information.

Network Isolation Bulbs (HPO-0055)

MS/TP and EIO networks have an assembly of two isolation bulbs located near the network terminals. Normally the bulbs are not illuminated. If one or both bulbs are illuminated, it indicates the network is improperly phased (the ground potential of the controller/module is not the same as on other controllers/ modules on the network).

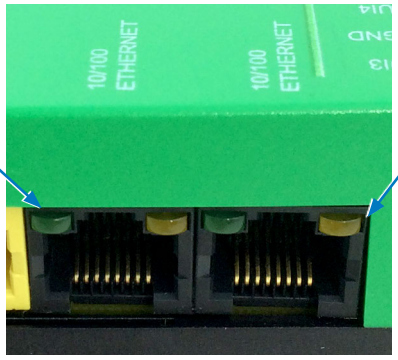

Illustration: Ethernet Indicators (2016 and Later BAC-90xxE Shown)

Ethernet LEDs (Green and Amber)

(Optional) Ethernet network connectors have two built-in LEDs:

- The amber LED illuminates when the controller has power and is communicating at its highest speed (100BaseT). (It is off when the connection is communicating at 10BaseT.)
- The green LED will blink at a rate in accordance to Ethernet traffic.
- If neither LED is illuminated, controller is unpowered or there is a faulty Ethernet connection.

Early BAC-59xxE and BAC-9xxE models had a single Ethernet port. In mid-2016, dual port models began replacing the single port models. On these newer models, the Room Sensor port is yellow instead of black to help differentiate it from the black Ethernet ports.

NOTE: The Room Sensor port is **next** to the Ethernet ports in the BAC-90xxE VAV controllers. It is on the **opposite** side on BAC-93xxE and BAC-59xxE controllers.

CONNECTIONS(SENSORS,EQUIPMENT,NETWORKS)

Input Connections (Room Sensor Port)

Dedicated Use of (STE-9000/6000) Room Sensor Port

⚠ CAUTION

On Conquest "E" models, do NOT plug a cable meant for Ethernet communications into the Room Sensor jack. The Room Sensor port powers a NetSensor, and the supplied voltage may damage an Ethernet card, switch, or router to which it is accidentally connected. See Illustration: Inputs and Ports (Early BAC-9001CE) on page 9 and Illustration: Room Sensor and Dual Ethernet Ports on page 9.

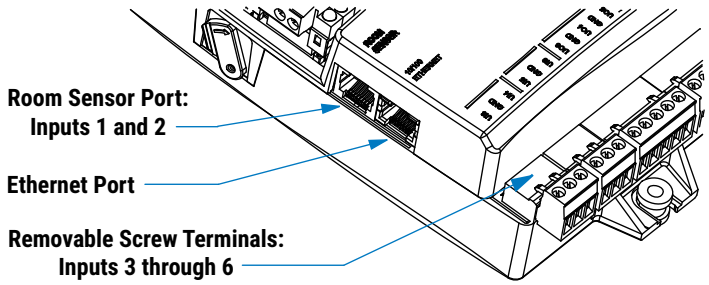

Illustration: Inputs and Ports (Early BAC-9001CE)

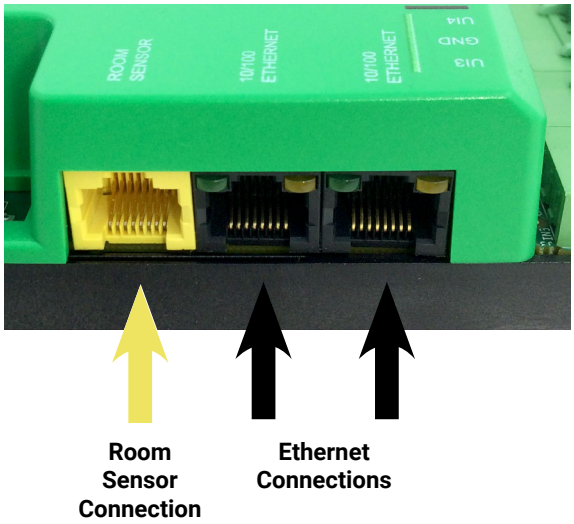

(2016 and Later BAC-90xxE Shown)

Illustration: Room Sensor and Dual Ethernet Ports

Early model BAC-59xxE and BAC-9xxE models had a single Ethernet port. In mid-2016, dual port models began replacing the single port models. On these newer models, the Room Sensor port is yellow instead of black to help differentiate it from the black Ethernet ports.

NOTE: The Room Sensor port is **next** to the Ethernet ports in the BAC-90xxE VAV controllers. It is on the **opposite** side on BAC-93xxE and BAC-59xxE controllers.

The dual Ethernet ports on these controllers function as Ethernet switches to other controllers as well as interfaces within each controller. This allows daisy-chaining of Ethernet models. See **Daisy-Chaining Conquest Ethernet Controllers Technical Bulletin (TB160426)** for more information.

NOTE: The **input objects AI1 and AI2 are dedicated for use with analog electronic STE-6010, STE-6014, and STE-6017 sensors**, but not digital STE-9xx1 NetSensors. See **Analog STE-6000 Series Thermistor Sensors on page 12**. When a NetSensor is connected to the port, AI1 and AI2 will appear in software to be unused. The NetSensor digitally communicates with the value objects AV1, AV3, and AV4. See **Digital STE-9000 Series NetSensors on page 10**.

NOTE: For additional information on value objects, see **BACnet Objects List on page 81**.

NOTE: AI1 and AI2 can be used with other sensors by connecting to Pin 3 and Pin 1 and/or Pin 8 of an RJ45-type modular connector inserted in the Room Sensor port. See **Illustration: Room Sensor Port Pinouts on page 10**.

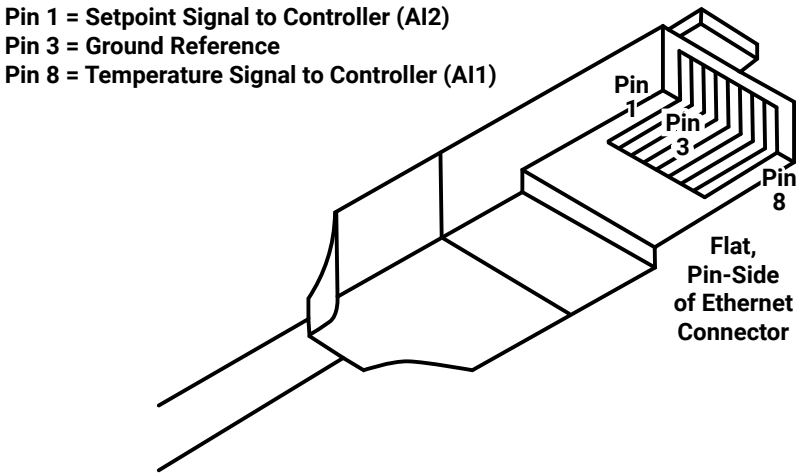

Illustration: Room Sensor Port Pinouts

Digital STE-9000 Series NetSensors

STE-90xx/93xx

STE-92xx/95xx with Motion Sensor

Illustration: STE-9000 Series NetSensors

These KMC Conquest digital wall sensors include a room temperature sensor, optional sensors (humidity, motion, and/or CO_2), a digital display, and a push-button interface for entering setpoints and configuring the controllers. Connection is made using a standard Ethernet patch cable. If an STE-9000 series sensor is detected, the sensor's temperature is mapped to the Space Temperature Reference value object (AV1) as the temperature input value. The cooling and heating setpoints are mapped to Active Cooling Setpoint (AV4) and Active Heating Setpoint (AV5).

For information about using the NetSensor to configure Conquest controllers, see **Controller Configuration with STE-9xx1 Menus on page 27**, **Restore (RSTR) and Application/Units Selection on page 31**, and **VAV Airflow Balancing with an STE-9xx1 on page 32**.

NOTE: If the display remains blank after plugging it in, see **NetSensor Display is Blank on page 41**.

STE-93xx/95xx CO_2 Sensor and DCV

The space **CO_2 level** read by an **STE-93xx/95xx** sensor always maps to **AV57**.

DCV (Demand Control Ventilation) is available in a KMC Conquest controller (only) when all five of these conditions are met:

- A **BAC-93xx** controller is used.
- The **HPU or RTU** application is chosen.
- An **economizer** is enabled.
- An **STE-93x1/95x1** NetSensor is connected to the Room Sensor port.
- **AND** the controller firmware is **R1.0.0.6** or higher.

After all the DCV conditions are met, adjust these settings:

- **DCV, which is disabled by default** (under **CO2** in the NetSensor System menu or BV29). Enable it to use it.
- **CO2 Setpoint** (800 ppm default), which is the value at which DCV control of the economizer damper position begins (under **CO** in the NetSensor Setpoint menu or AV59).
- **CO2 Range** (200 ppm default), which proportionally controls the economizer damper position for a given CO_2 reading above the setpoint (under **CORA** in the NetSensor Setpoint menu or AV58).

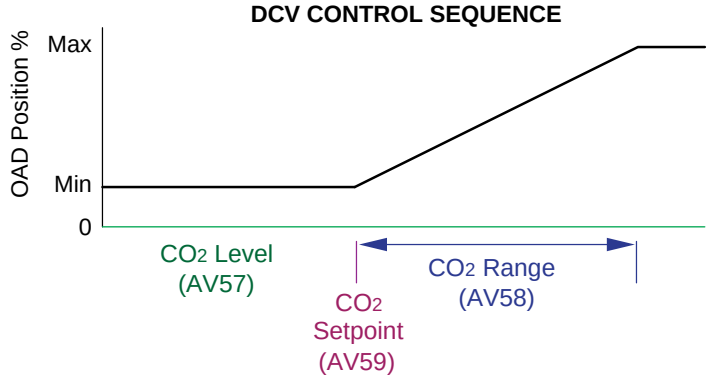

Illustration: DCV Control Sequence

NOTE: At the bottom of the CO_2 range, the damper is at the minimum position (assuming there is no other demand on the economizer). At the top of the range, the damper opens to the maximum value. For example, with the defaults and no other ventilation demand, the damper position would be at its minimum for a CO_2 reading of 800 ppm and at its maximum for a CO_2 reading of 1000 ppm or higher.

For **other applications and/or controllers**, application programming that references the (AV57) CO_2 value may be added to the controller either by modifying the factory application programming or by adding Control Basic logic in an unused program.

NOTE: Alternately, to use an easy (menu-configurable) yet advanced DCV solution for AHU, RTU, FCU, and HPU applications, see the integrated sensor-and-controller **BAC-13xxx and BAC-14xxx series of FlexStats**.

NOTE: The STE-93xx/95xx CO_2 sensor uses a **self-calibration** technique designed to be used **in applications where CO_2 concentrations will periodically drop to outside ambient conditions (approximately 400 ppm),** typically during unoccupied periods. The sensor will typically reach its **operational accuracy after 25 hours of continuous operation if it was exposed to ambient reference levels of air at 400 ±10 ppm CO_2.** The sensor will **maintain accuracy specifications if it is exposed to the reference value at least four times in 21 days.** (There is no provision for calibrating with gas.)

NOTE: For troubleshooting tips, see **Demand Control Ventilation (DCV) Is Not Available or Working Properly on page 38**.

Analog STE-6000 Series Thermistor Sensors

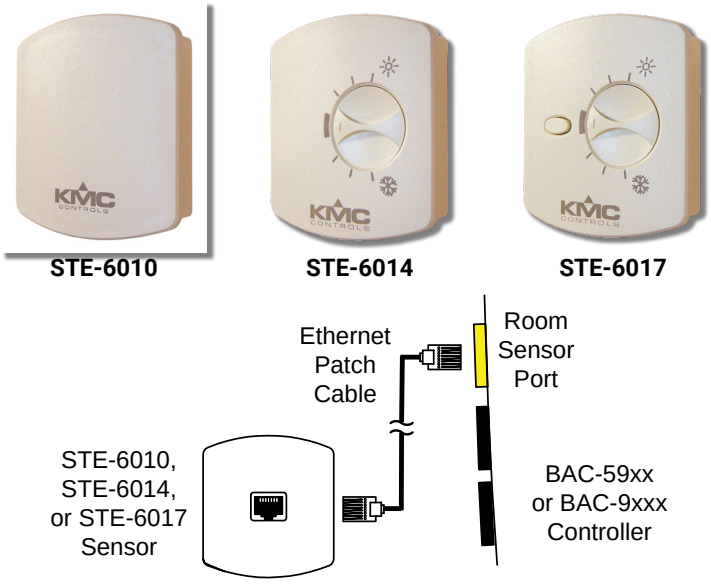

Illustration: STE-601x Sensors Compatible with Room Temp. Port

Three models of the STE-6000 series sensors are compatible with the Room Sensor port on KMC Conquest controllers. If an **STE-6010**, **STE-6014**, **or STE-6017** is connected to the Room Sensor port (with a standard Ethernet patch cable), the sensor's **temperature** from AI1 is automatically mapped to the Space Temperature Reference value object (AV1) as the temperature input value.

The **HPO-9005** room sensor adapter allows the use of other sensors and optional setpoint potentiometers to be used instead (e.g., an **STE-6011** or **STE-6019**). This provides the means of reusing an existing suitable sensor and wiring in a retrofit application or using a different kind of sensor (e.g., a flat plate sensor such as a **STE-1430**) for new installations.

NOTE: Other STE-6000 series sensors with terminals can be used with the controller's terminals.

The STE-6014 and STE-6017 include a **dial** for adjusting the zone **setpoint**. If either of these two sensors is detected, the reading of the dial setting (AI2) is mapped to the Setpoint Offset (AV2).

The default range of the setpoint offset (AV2) is plus or minus 3 for °F applications (or 1.5 for °C applications). This means that, **with the STE-6014/6017, users can adjust the scheduled setpoint a maximum of three degrees up or down (e.g., 69 to 75 for a scheduled setpoint of 72°)**. To change the maximum range (using KMC Connect or TotalControl):

- Change the relinquished default value (of 3) in AV12. (AV12 is the standby offset typically used with occupancy control). AI2 is mapped to AV2 (with a multiplier AV12) for the setpoint offset, and AV2 is the value used in room temperature control programming (not AI2 directly). AV2 = AI2 x AV12. (If AV12 = 1, then AV2 = AI2.) See the **HPO-9005 Room Sensor Adapter Installation Guide** for more information about configuration.
- Alternately, import custom table values into (Table Object) Input Table 4. (See the software documentation for more information.)

An STE-6017/6019 sensor also includes a button that shunts the thermistor when pushed (SENSORON in Control Basic) to indicate **override** of an unoccupied state. Local Override (e.g., BV4 in a BAC-9001) then becomes Active until the Local Override Timer (AV38) value is exceeded. (The controller performs the override function automatically, and no additional programming using SENSORON is required.)

NOTE: The override button needs to be pressed and held for at least a half a second to be reliably recognized for override mode.

Input Connections (Universal, Terminals)

NOTE: On Conquest controllers, Inputs 1 and 2 are dedicated to the Room Sensor port. Terminals on removable green blocks start with Input 3. (See **Illustration: Controller Overview (BAC-5901) on page 4** and **Illustration: Inputs and Ports (Early BAC-9001CE) on page 9**.) The input object AI1 is dedicated to the room temperature, and object AI2 is dedicated to room temperature setpoint. If reusing Custom Control Basic programs from older controllers, make any necessary changes to the input objects in the program. See **Analog STE-6000 Series Thermistor Sensors on page 12**.

The universal inputs on green terminal blocks can be configured as:

- Analog objects—Changing resistance (thermistor) or 0 **TO** 12 VDC
- Binary objects—Open/Close passive switch or 0 **OR** 12 VDC

For an **active** voltage input, configure the input for 0–12 VDC (in the Termination drop-down selection of KMC Connect, Converge, or TotalControl).

NOTE: For 0–12 VDC inputs, select 0–12 V in the Termination drop-down box rather than Fixed Bias 0–12 V. Fixed Bias 0–12 V is automatically selected by built-in applications for mapping some inputs (e.g., AI1 and AI2 with STE-60xx sensors) into AVs. Other such inputs include: AI7 Primary Duct (BAC-9001), AI8 Primary Position (BAC-9001), and AI9 Duct (BAC-9311).

For **passive** analog input signals, such as thermistors, configure the input for 10K ohm (or 1K ohm for most RTDs) pull-up resistor.

For **passive binary** input signals, such as switch contacts, convert an analog input to a **binary** input:

- By right-clicking the input object in the Network Manager list and selecting **Convert To**.
- By opening the object configuration page and selecting **Convert To** above it.
- By removing an analog input object and adding a binary input object in its place. (See the software's documentation for more information.)

For a **pulse** input signal, convert an analog input to an **accumulator** input (in the same way as converting to a binary object above) and configure it in the following manner:

- If the pulse input is a passive input, such as switch contacts, then configure the input for 10K ohm pull-up resistor.
- If the pulse is an active voltage up to a maximum of 12 VDC, then configure the input for 0–12 VDC.

For a **4–20 mA** current loop input, configure the input for 4–20 mA. See also the **4–20 mA Wiring for Controllers Application Guide**.

Output Connections

Connecting Universal Outputs

Connect the output device under control between the output terminal and the ground (GND) terminal on the same bank. On BAC-9300 series, Switched Common (SC) terminals are used on the BO terminals. On BAC-5900 series controllers and CAN-5900 series expansion modules, SC terminals are only used with some of the output override boards. See **Grounds Versus Switched (Relay) Commons on page 14**.

The universal outputs (on green terminal blocks) can be configured as:

- Analog objects—0 TO 12 VDC
- Binary objects—0 OR 12 VDC

For either type of output, the DC voltage signals can—within the specification of the output—connect directly to most equipment. For additional options, see **Installing Override Boards in BAC/CAN-5900 Series on page 16**.

NOTE: For 4–20 ma applications, see also the **4–20 mA Wiring for Controllers Application Guide**.

Grounds Versus Switched (Relay) Commons

Use the SC terminal in the same output bank (individual terminal block) as its output terminal. The switched common terminals are isolated from the circuit grounds used for the universal output analog circuitry in controllers. See **Illustration: Conquest SC Terminals on page 15**.

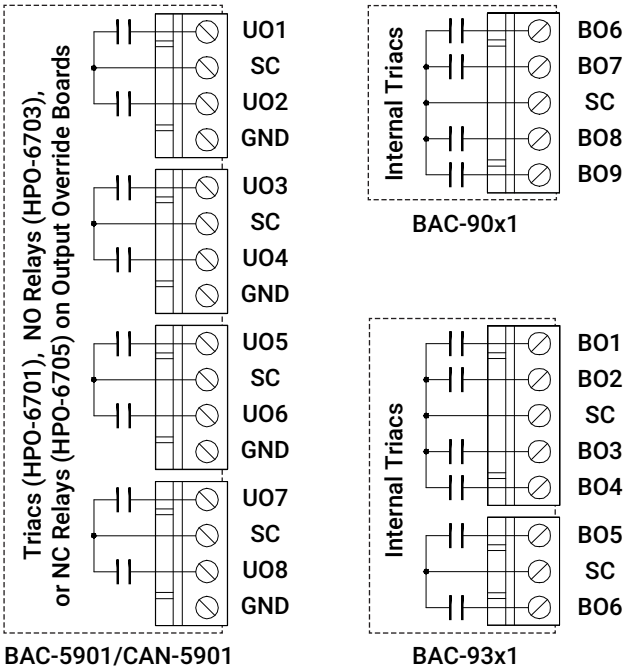

Illustration: Conquest SC Terminals

See also **SC Terminals in Initial BAC-93xx Controllers on page 15**.

Switched Common (SC) output terminals are unconnected in the BAC-5900 series controller unless the jumper is removed and an appropriate relay/triac override output board is installed. **Use only the Switched (relay) Common instead of the Ground with the HPO-6701 triac and HPO-6703/6705 relays!** See **Illustration: Output Override Boards Configuration on page 17** and **Illustration: Output Schematics on page 17**.

SC Terminals in Initial BAC-93xx Controllers

Initial shipments of BAC-93x1 controllers (**before** Date Code 1535, shipped Sept. 1, 2015, S/N KMC1509xxxxxx) had the SC (Switched Common) terminals of the two binary terminal blocks connected together on the circuit board. (See **Illustration: Initial (before Sept. 2015) BAC-93xx Controller SC Terminals on page 15**.)

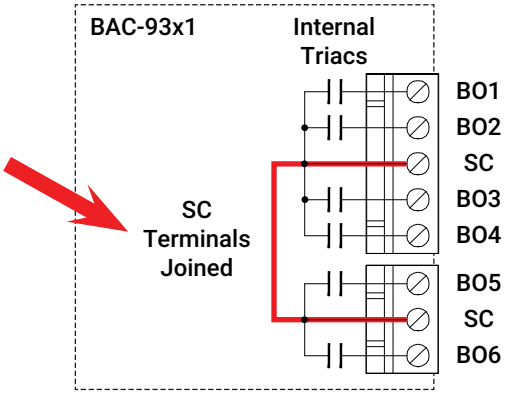

Illustration: Initial (before Sept. 2015) BAC-93xx Controller SC Terminals

Having SC terminals joined together is a convenience for most applications.

⚠ CAUTION

If SEPARATE transformers or power supplies are connected to the SC terminals of these controllers, however, equipment damage could occur.

For example, a transformer and output device connected to the triac on BO1 and the corresponding (upper) SC terminal may conflict with another transformer and device connected to the BO5 triac and the corresponding (lower) SC terminal.

NOTE: The switched common terminals are isolated from the circuit grounds used for the universal output analog (VDC) circuitry in controllers. Triacs are for VAC only.

For these BAC-9300 series controllers:

- Connect (only) a single source of power to either SC terminal.
- If separate circuits with separate power sources are needed, connect an intermediate relay (such as an REE-3101) to an output or replace the BAC-93xx with a later unit (after Date Code 1535, shipped Sept. 1, 2015).

Later shipments of BAC-9300 series controllers have the SC terminals separate as shown in **Illustration: Conquest SC Terminals on page 15**.

Installing Override Boards in BAC/CAN-5900 Series

For enhanced output options, such as manual control or using large relays or devices that cannot be powered directly from a standard output, install output override boards (also called “cards”). See **Illustration: Output Override Boards Configuration on page 17**.

Output boards have an accessible three-position slide switch for selecting the “Hand-Off-Auto” functions:

- While in the “Hand” (H) position, the output is manually energized, and the controller receives a feedback signal to indicate the output has been overridden.
- While in the “Off” (O) position, the output is manually de-energized, and the controller receives a feedback signal to indicate the output has been overridden.
- While in the “Auto” (A) position, the output is under the command of the controller.

Each output board also has a red LED that illuminates when the output is turned On (either manually or automatically).

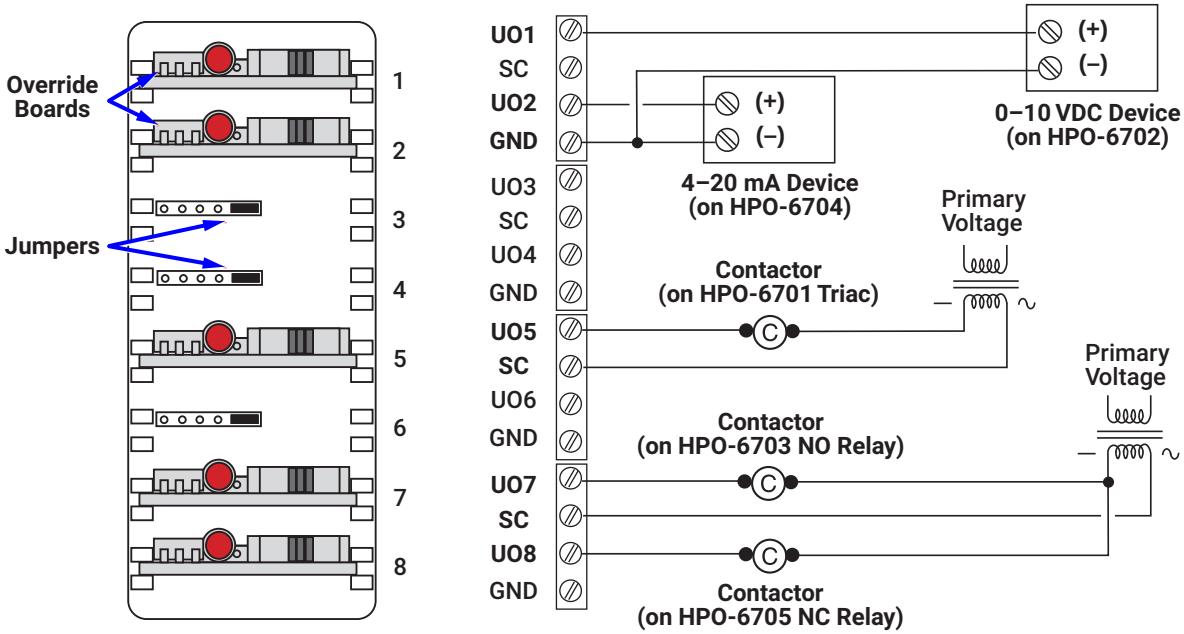

Illustration: Output Override Boards Configuration

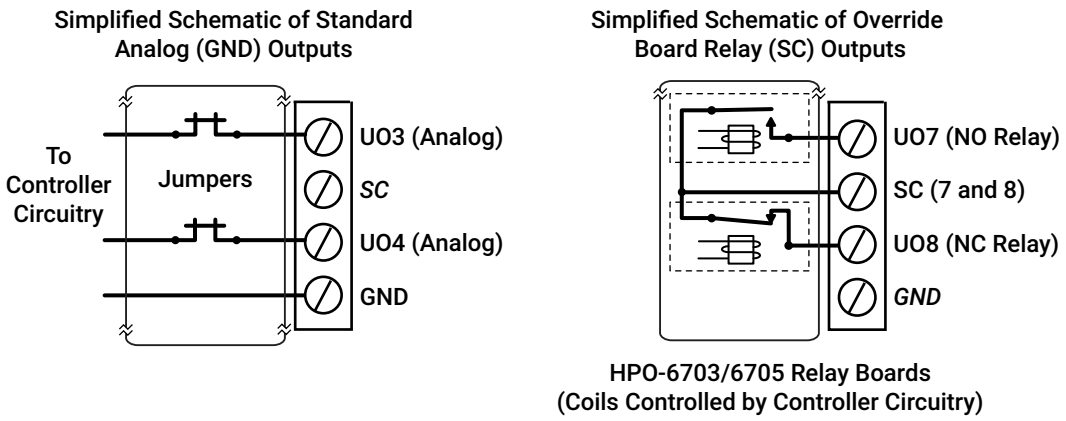

Illustration: Output Schematics

The following output boards are available from KMC Controls:

OUTPUT OVERRIDE BOARDS	
Model Number	**Output Type***
HPO-6701**	**Triac (AC only):** zero-cross switching, optical isolation, 12 VAC min. and 30 VAC max. voltage, 20 mA min. and 1 A max. current
HPO-6702	**0–10 VDC analog:** short protection, 100 mA max., adjustable override potentiometer
HPO-6704	**4–20 mA current loop:** short protection, adjustable override potentiometer (since the HPO-6704 supplies the power, it will not work with a 4–20 mA device that also supplies its own power)
HPO-6703*	**Normally open relay:** 30 VAC/VDC, 2 A max.
HPO-6705*	**Normally closed relay:** 30 VAC/VDC, 2 A max.
*For more information, see the **HPO-6700 Series Output Override Boards Data Sheet**. **With the **HPO-6701 triac** and **HPO-6703/6705 relays**, use the **Switched Common** terminals instead of Ground.	

NOTE: For 4–20 ma applications with the HPO6704, see also the **4–20 mA Wiring for Controllers Application Guide**.

⚠ CAUTION

Connecting 24 VAC or other signals that exceed the operation specifications of the controller before the output jumper is removed will damage the controller. Remove the jumper and install the override board before connecting AC or other voltage to the output terminals of the controller.

To install the HPO-6700 series override boards:

1. Disconnect the power to the controller.
2. Pull the top edge of the (translucent black) override board cover away from the case and open the cover.
3. Remove the jumper from the relevant mounting header pins. See **Illustration: Output Override Boards Configuration on page 17**.
4. Position the board in the relevant slot with the Hand-Off-Auto selection switch positioned toward the output connections.
5. Slide the board down the integral board tracks onto the header pins.
6. Set the selection switch on the override board to the desired position. A (Automatic) is the top position of the switch, O (Off) is the center position, and H ("Hand" or On) is on the bottom position.
7. Repeat steps 3 through 6 to install additional boards.
8. Close the override board cover.
9. Connect the output devices to the controller outputs. See **Grounds Versus Switched (Relay) Commons on page 14**.
10. Reconnect the power.

NOTE: If a board is to be moved or removed, reinstall the (HPO-0063) jumper (removed in Step 3) on the two pins closest to the outputs.

NOTE: For 4–20 ma applications, see also the **4–20 mA Wiring for Controllers Application Guide**.

Connecting a VAV Remote Actuator to a BAC-9311

Instead of using a BAC-9000 series controller-actuator in a VAV application, using a BAC-9311 with a remote actuator provides additional options, such as higher torque or fail-safe. The tri-state actuator should be connected to the BO5, BO6, and SC terminals of the triac (VAC only) outputs. See **Illustration: Remote Actuator Wiring on page 19**.

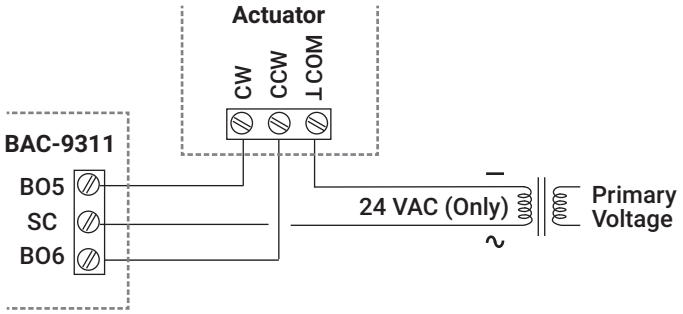

Illustration: Remote Actuator Wiring

See **Illustration: Remote Actuators for a BAC-9311 on page 19** to select an appropriate actuator. Some applications may require custom programming.

TRI-STATE MODELS*	TORQUE (IN-LB.)						
	25	40	45	80	90	180	320
NON-FAIL-SAFE							
MEP-4201	✓						
MEP-40x1/40x3		✓					
MEP-4501			✓				
MEP-48x1/48x3				✓			
MEP-4901					✓		
MEP-7501/7503						✓	
MEP-7801/7803							✓
FAIL-SAFE							
MEP-4251	✓						
MEP-4551			✓				
MEP-4951					✓		
MEP-7551/7553						✓	
MEP-7851/7853							✓
*See the relevant data sheet for options and other specifications.							

Illustration: Remote Actuators for a BAC-9311

MS/TP Network Connections

Connections and Wiring

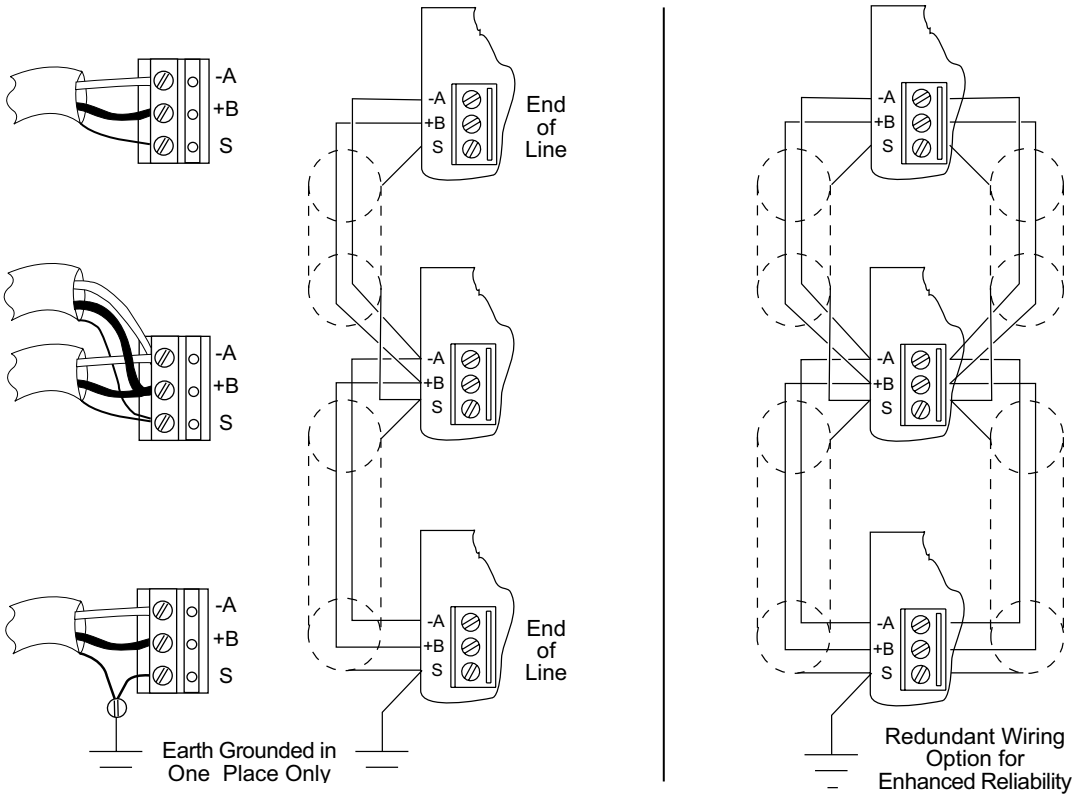

Illustration: MS/TP Network Wiring (Standard and Redundant Wiring)

Use the following principles when connecting a controller to an MS/TP network:

- Use 18 gauge, twisted-pair, shielded cable with capacitance of no more than 51 picofarads per foot (167 pf/m) for all network wiring. Manufacturers' cables that meet KMC requirements include Belden (18 AWG) P/N **82760**, Windy City Wire (18 AWG) P/N **052000LC**, and Windy City Wire (22 AWG) P/N **043000-110** or **043000AL**.
- Connect the –A terminal in parallel with all other –A terminals and the +B terminal in parallel with all other +B terminals. See **Illustration: MS/TP Network Wiring (Standard and Redundant Wiring) on page 20**.
- Connect the shields of the cable together at each controller. For KMC BACnet controllers use the S (Shield) terminal. The S terminal is provided as a connecting point for the shield. The terminal is not connected to the circuit ground of the controller. When connecting to controllers from other manufacturers, verify the shield connection is not connected to ground.
- Connect the shield to an earth ground **at one end only**.
- To maintain communications in case of an open conductor on the network cable, use redundant wiring routed separately to enhance reliability. See **Illustration: MS/TP Network Wiring (Standard and Redundant Wiring) on page 20**.
- Connect no more than 128 addressable BACnet master devices (total) to one MS/TP network. The devices can be any mix of controllers or routers. (Up to 127 slave devices can also be connected.)
- Limiting the MS/TP network size to no more than about 30 controllers will optimize network performance.

- If the network has more than 31 MS/TP devices or if the cable length exceeds 4,000 feet (1,220 meters), use a KMD-5575 repeater (on an MS/TP-only network if the baud rate on the network is no higher than 38.4K baud) or a faster KMC BAC-5051E router with an Ethernet network. For each network segment, connect the shields to a good earth ground at only one end of the segment; tape back the shield ground at the other end. Generally, use no more than four KMD-5575 repeaters per MS/TP network.
- Use a KMC KMD-5567 surge suppressor where a cable exits the building.

NOTE: See **Planning BACnet Networks (Application Note AN0404A)** for additional information about installing controllers.

NOTE: To temporarily disconnect the controller from the network, pull out the isolation bulb assembly or the MS/TP terminal block from its connector.

NOTE: For troubleshooting the wiring, see the **MS/TP Troubleshooting Using a Multimeter - Bifurcation** video and downloadable troubleshooting guide.

EOL (End of Line) Termination Switches

The controllers on the physical ends of the EIA-485 wiring segment must have EOL (End of Line) termination enabled for proper network operation. In the end controllers (only), turn the EOL swi tches On. See **Illustration: End-of-Line Termination on page 21**. Verify that all other controllers have EOLs turned Off (as shipped from the factory).

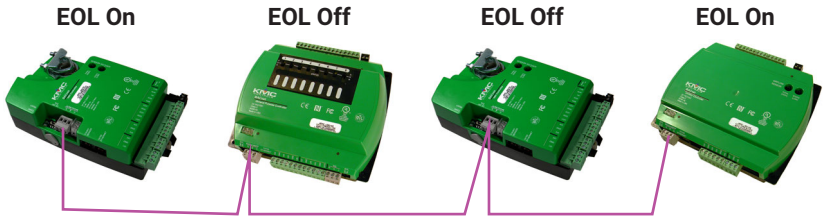

Illustration: End-of-Line Termination

Temporary Network Connection

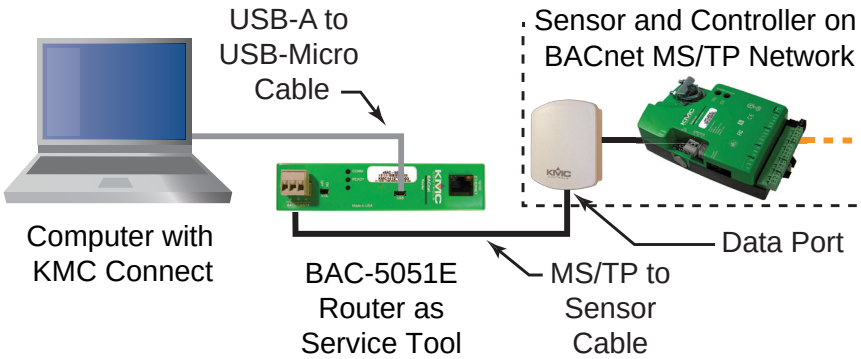

Illustration: Using a BAC-5051E as a Service Tool

For configuration and troubleshooting, data ports on the bottom of STE-9xxx NetSensors or STE-6010/6014/6017 analog sensors provide temporary MS/TP network connections using a BAC-5051E router and KMC Connect on a computer. See the **BAC-5051E Router Application Guide** for instructions.

NOTE: This temporary connection through the data port is not available on Ethernet networks.

Ethernet Network Connections

NOTE: See also (Status) Indicators on page 7!

The controller connects in the same manner as other Ethernet devices. Connect a standard T568B CAT 5 or CAT 6 Ethernet cable from the Ethernet port on the controller to a network router, switch, or hub.

⚠ CAUTION

Do NOT plug the cable meant for Ethernet communications into the Room Sensor jack. The Room Sensor port powers a NetSensor, and the supplied voltage may damage an Ethernet card, switch, or router to which it is accidentally connected. See Illustration: Inputs and Ports (Early BAC-9001CE) on page 9 and Illustration: Room Sensor and Dual Ethernet Ports on page 9.

NOTE: Early BAC-59xxE and BAC-9xxE models had a single Ethernet port. In mid-2016, dual ports replaced the single ports. Additionally on these newer models, the Room Sensor port is yellow instead of black to help differentiate it from the black Ethernet ports.

NOTE: BAC-59xxE and BAC-9xxE models with dual Ethernet ports support daisy-chaining. See the technical bulletin (TB160426) **Daisy-Chaining Conquest Ethernet Controllers** on the KMC web site (after logging in) for more information

With current firmware, a Conquest "E" model controller can be configured (using KMC Connect, TotalControl, or Converge, but not a NetSensor) for the following types of communication:

- Ethernet 802.3 (ISO 8802-3)
- BACnet IP
- Foreign Device

NOTE: Placing the controller on an BACnet IP network without proper configuration and assigning the correct IP address could cause disruption to the Ethernet LAN network service. See relevant software documentation for more information about IP configuration.

Conquest Ethernet-enabled "E" models with the latest firmware can be configured with an HTML5 compatible web browser from pages served from within the controller. For complete details, see the **Conquest Ethernet Controller Configuration Web Pages Application Guide**.

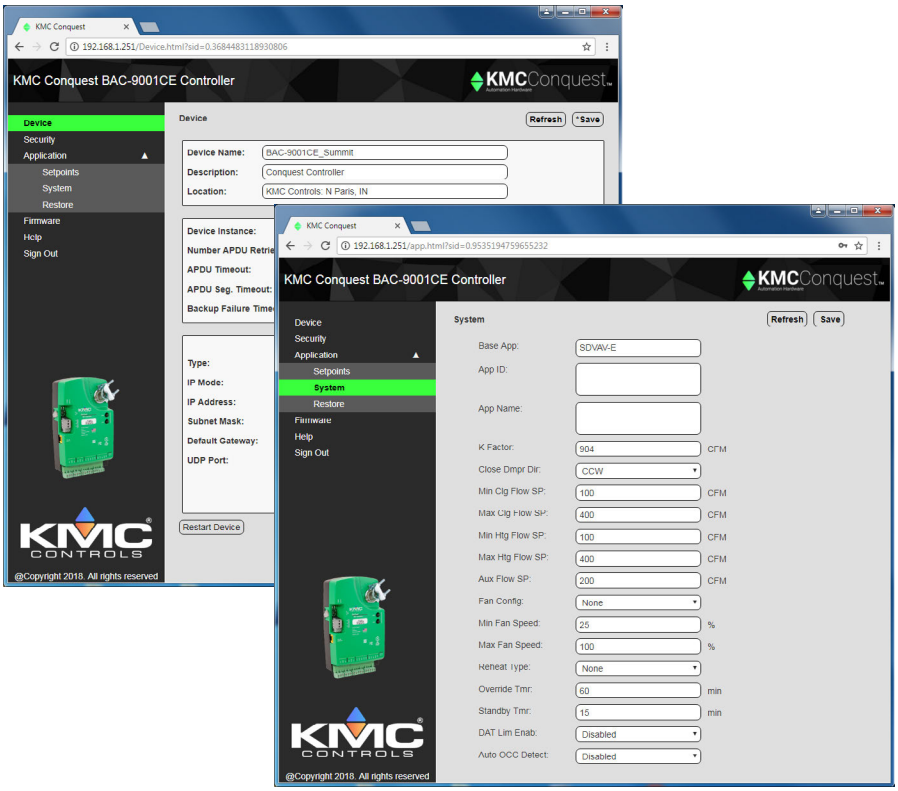

Illustration: Ethernet Model Configuration Web Pages

The controllers have the following default network address values:

- IP address—192.168.1.251
- Subnet mask—255.255.255.0
- Gateway—192.168.1.1

NOTE: The default IP address of the BAC-5051E router is 192.168.1.25**2**.

Power (Controller) Connections

Use the following guidelines when choosing and wiring 24 VAC transformers.

- Use a KMC Controls Class-2 transformer of the appropriate size to supply power to the controllers. KMC Controls recommends powering only one controller from each transformer. Do not run 24 VAC power from within an enclosure to external controllers.
- If several controllers are mounted in the same cabinet, a transformer can be shared between them provided the transformer does not exceed 100 VA (or other regulatory requirements), the total power drawn does not exceed the transformer's rating, and the phasing is correct.

To **connect 24 VAC (–15%, +20%), 50/60 Hz, power** to the black (removable) terminal block:

- Connect the AC **phase** to the **~** (phase/R) terminal.
- Connect the **neutral** lead from the transformer to the **⊥** (common) terminal.

Power is applied to the controller when the transformer or power supply is powered and the removable terminal block is plugged into the connector.

Transformers for optional CAN-5900 series expansion modules should be powered on the same circuit as that of their controller. See the **CAN-5900 Series Installation Guide**.

NOTE: New **BAC-5900, CAN-5900, and BAC-9300** series controllers (with the latest hardware revisions) can also be powered by 24 Volts **DC** as well as **AC**. See **Illustration: 24 VAC and VDC Power Connections on page 24**.

NOTE: BAC-9000 series VAV controller-actuators and the TSP-8003 dual-duct actuator, however, are to be powered by AC only because of motor timing. STE-9000 NetSensors are powered by the connection to the controller.

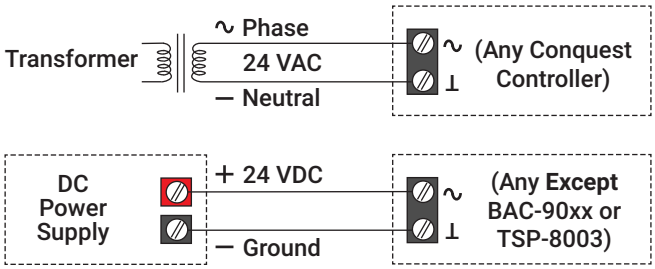

Illustration: 24 VAC and VDC Power Connections

To connect 24 V**AC (–15%, +20%), 50/60 Hz**, power to the black (removable) terminal block:

- Connect the AC **phase** to the **~** (phase/R) terminal.
- Connect the **neutral** lead from the transformer to the **⊥** (common) terminal.

To connect 24 V**DC (–15%, +20%)** instead of VAC power (to new BAC-5900, CAN-5900, and BAC-9300 series only):

- Connect 24 **VDC** to the **~** (phase/R) terminal.
- Connect **GND** to the **⊥** (common) terminal.

CONFIGURATION

Configuring, Programming, and Designing

For configuration and programming information, see the documents and Help systems for the respective tool.

SETUP PROCESS			KMC CONTROLS TOOL
Configuration	**Programming (Control Basic)**	**Web Page Graphics***	
✓			Conquest NetSensor
✓			Internal configuration web pages in Ethernet "E" models**
✓			KMC Connect Lite™ (NFC) app***
✓	✓		KMC Connect™ software
✓****	✓****	✓	TotalControl™ software
✓	✓		KMC Converge™ module for Niagara WorkBench
		✓	KMC Converge **GFX** module for Niagara WorkBench

*Custom graphical user-interface web pages can be hosted on a remote web server, but not in the controller.

Conquest Ethernet-enabled **"E" models with the latest firmware can be configured with an HTML5 compatible web browser from pages served from within the controller. For information, see the **Conquest Ethernet Controller Configuration Web Pages Application Guide**.

***Near Field Communication via enabled smart phone or tablet running the KMC Connect Lite app (optionally with an HPO-9003 NFC-Bluetooth/USB module/fob).

****Full configuration and programming of KMC Conquest controllers is supported starting with TotalControl ver. 4.0.

Illustration: Configuration, Programming, and Graphics Tools

For configuration using a **NetSensor**, see **Controller Configuration with STE-9xx1 Menus on page 27**. See also **Restore (RSTR) and Application/Units Selection on page 31** and **VAV Airflow Balancing with an STE-9xx1 on page 32**.

NOTE: A NetSensor is only one option for configuring controllers, however. For example, a NetSensor cannot configure controllers while they are still in the box or configure IP options for Ethernet models. But those functions can be done with the **KMC Connect Lite app** on an NFC enabled smart phone. You would probably also want to use Connect Lite instead of a NetSensor if you are configuring a large number of controllers. On the other hand, use a NetSensor if you want to configure MS/TP model controllers without any software or app. You may want to use a NetSensor if you only have a few controllers to configure.

NOTE: On Conquest controllers, Inputs 1 and 2 are dedicated to the Room Sensor port (for the STE-6010/6014/6017—see **Analog STE-6000 Series Thermistor Sensors on page 12**). The input object AI1 is dedicated to the room temperature (for the STE-6010/6014/6017), and object AI2 is dedicated to room temperature setpoint (for the 6014/6017). If reusing Custom Control Basic programs from older controllers, make any necessary changes to the input objects in the program.

NOTE: Input objects AI1 and AI2 are **not** used by STE-9xxx NetSensors. Those digital sensors map temperature and setpoint values directly to AV1, AV4, and AV5. (See **Digital STE-9000 Series NetSensors on page 10**.)

NOTE: Terminals on removable blocks start with Input 3. (See **Illustration: Controller Overview (BAC-5901) on page 4** and **Illustration: Inputs and Ports (Early BAC-9001CE) on page 9**.)

NOTE: Customized programming is the responsibility of the user. KMC Controls does not provide support for such programs.

NFC (Near Field Communication)

An NFC-enabled device can be used with KMC Connect Lite to configure KMC Conquest controllers. See the **KMC Connect Lite Mobile App User Guide** for information on configuring controllers via NFC.

NOTE: To meet FCC regulations and enhance data communication reliability, NFC operation should only be used when the controller is **not** powered.

NOTE: Because of the very short range of NFC, hold the NFC-enabled phone or HPO-9003 NFC-Bluetooth/USB module (fob) as close as possible over the NFC symbol on the controller or unpacked controller box.

For additional security after configuration, NFC can be disabled (in controllers with firmware E1.0.0.31 or later), using the latest version of KMC Connect, Converge, or TotalControl. Disabling NFC prevents the reading and updating of configuration data in the controller through NFC. To disable NFC, see the instructions in the Disabling/Enabling NFC in Controllers section of the **KMC Connect Lite Mobile App User Guide**.

NOTE: NFC should only be disabled after the controller has been installed.

Passwords

To protect against unauthorized tampering with the configuration parameters, Conquest controllers are factory-set with a default level 2 password when using an STE-9000 series NetSensor or the KMC Connect Lite NFC app. See the **Conquest Controllers Default Password Technical Bulletin** by logging into the **KMC web site** and looking at the downloadable documents for any of the KMC Conquest controllers or STE-9000 series NetSensors.

Controller Configuration with STE-9xx1 Menus

NOTE: Screens are dependent on application (default dual duct VAV is shown below). For descriptions of these and other screens not shown, see **Conquest NetSensor Screen Abbreviations on page 28**.

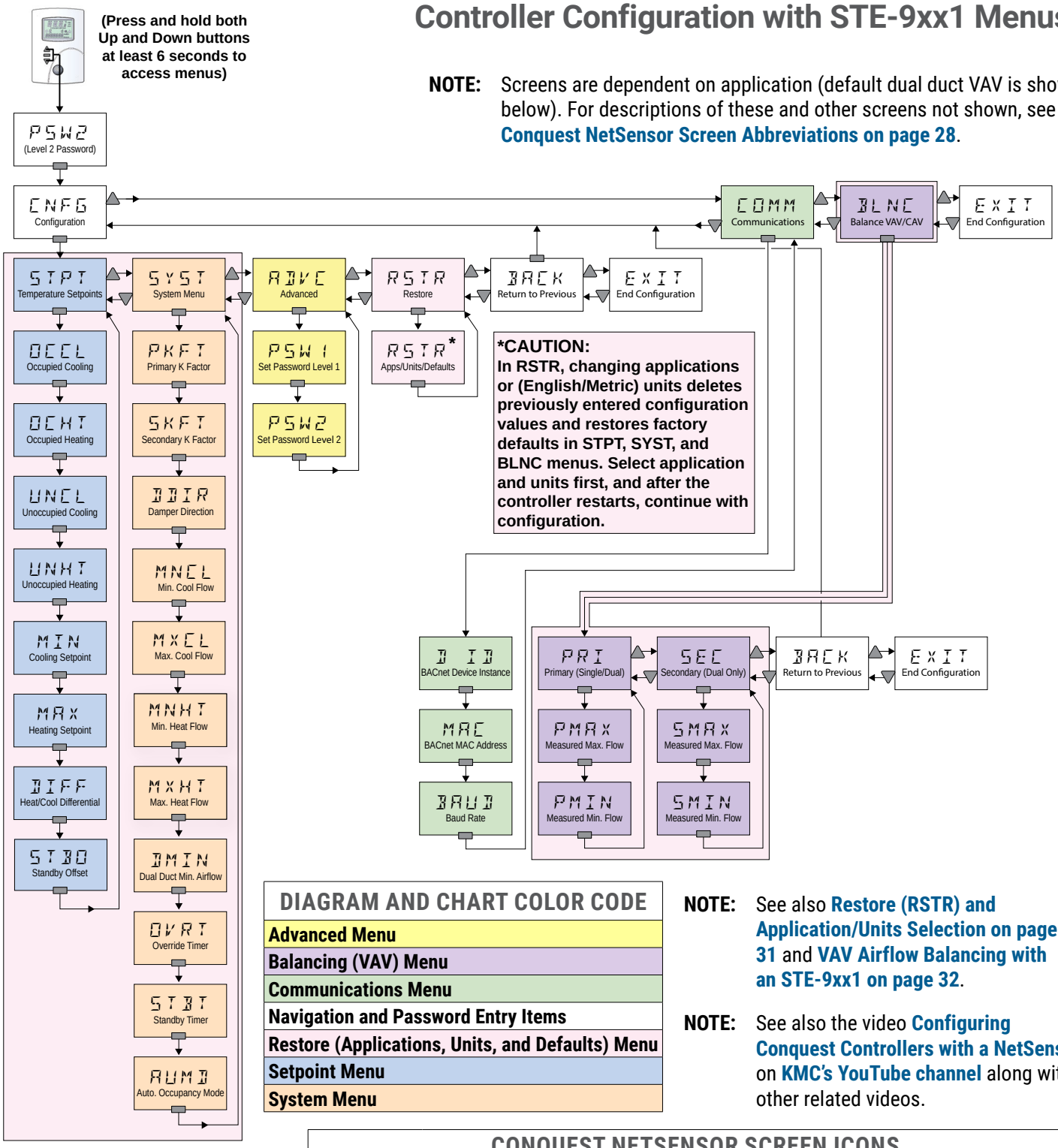

DIAGRAM AND CHART COLOR CODE
Advanced Menu
Balancing (VAV) Menu
Communications Menu
Navigation and Password Entry Items
Restore (Applications, Units, and Defaults) Menu
Setpoint Menu
System Menu

NOTE: See also **Restore (RSTR) and Application/Units Selection on page 31** and **VAV Airflow Balancing with an STE-9xx1 on page 32**.

NOTE: See also the video **Configuring Conquest Controllers with a NetSensor** on **KMC's YouTube channel** along with other related videos.

CONQUEST NETSENSOR SCREEN ICONS		
Icon	**Meaning**	**Comments**
A	Cooling/Heating Mode	User-selected Cooling (snowflake) or Heating (flame) or automatic (A)
A	Fan	Off, Low, Medium, or High speed (number of bars are dependent on configuration and fan type) and A = Automatic operation
OVR	Occupancy Mode	According to the schedule, sensed motion, or button activation: • Person in house = Occupied • Empty house = Standby • OVR = Override • None of the icons = Unoccupied

DIAGRAM AND CHART COLOR CODE
Advanced Menu
Balancing (VAV) Menu
Communications Menu
Navigation and Password Entry Items
Restore (Applications, Units, and Defaults) Menu
Setpoint Menu
System Menu

CONQUEST NETSENSOR SCREEN ABBREVIATIONS

Abbreviation	Meaning	Function/Comments
0.0	Calibration	Enter a positive number if reading is too low or negative number if reading is too high
ADVC	**Advanced Menu**	Set passwords and calibration
AUMD	Automatic Occupancy Mode	Automatic occupancy mode—enable (controller automatically enters unoccupied mode when it detects the loss of primary air supply) or disable (controller will remain in occupied mode regardless of the primary air supply)
AUX	Auxiliary Airflow (BAC-9xx1)	Set the BAC-9xx1 VAV auxiliary airflow setpoint for when reheat is active (cfm)
	Auxiliary Damper Position (BAC-9021)	Set the BAC-9021 pressure-dependent VAV auxiliary damper position (%)
	Auxiliary Heat (BAC-9301 FCU)	Enable/disable auxiliary heat for two-pipe BAC-9301 FCU applications
AUXH	Auxiliary Heat (BAC-93x1 HPU)	Select auxiliary heat options (None, 3rd Stage, Compressor Lockout) for BAC-93x1 HPU applications
AXLK	OAT Aux Heat Lockout	Set the Outside Air Temperature that locks out HPU auxiliary heat (°)
BACK	Back	Go back to previous menu
BAUD	Baud Rate	Set baud rate
BLNC	**Balance Menu**	Set airflow balancing parameters—only the PRI (primary) menu is used for single duct VAV
CHNG	SAT Changeover	Set the Supply Air Temperature setpoint (°) at which the controller will change between heating and cooling
CMLK	Compressor Lockout Temperature	Set Compressor Lockout Temperature (°)
CNFG	**Configuration Menu**	Access the configuration menus
CO	CO_2 Setpoint	The setpoint for DCV control (see **STE-93xx /95xx CO2 Sensor and DCV on page 11**)
CO_2	CO_2/DCV Enable	Demand Control Ventilation (DCV) is an available option when an economizer is enabled in BAC-93xx HPU or RTU applications and an STE-93x1/95x1 NetSensor is connected to the Room Sensor port (but is disabled by default)
CORA	CO_2 Range	The CO_2 value for DCV min. to max. damper opening (see **STE-93xx/95xx CO2 Sensor and DCV on page 11**)
COMM	**Communication Menu**	Set BACnet device instance, MAC address, and network baud rate
CVA	Cooling Valve Action	Select Normally Closed or Normally Open valve
DAEN	DAT Limiting Enable	Enable/disable Discharge Air Temperature Limiting
DDIR	Damper Direction	Select the rotation direction (CW or CCW) of the actuator to close the damper
DEHU	Dehumidification Setpoint	Set Dehumidification Setpoint (%)

DIAGRAM AND CHART COLOR CODE
Advanced Menu
Balancing (VAV) Menu
Communications Menu
Navigation and Password Entry Items
Restore (Applications, Units, and Defaults) Menu
Setpoint Menu
System Menu

DHDF	Dehumidification Differential	Set Dehumidification Differential (%)
D ID	BACnet Device Instance	Set BACnet Device Instance number
DIFF	Minimum Set-point Differential	Set the minimum allowable temperature value (differential) between the cooling and heating setpoints (°)
DMIN	Dual Duct Min Air-flow (BAC-9001)	Set the BAC-9001 dual duct VAV minimum airflow (cfm)
EETM	Economizer Ena-ble Temperature	Set Economizer Enable (Outside Air) Tempera-ture (°)
ELOC	Enable Compres-sor Lockout	Enable/disable compressor lockout
ENEC	Econ Enable	Enable/disable Economizer operation
ENDH	Enable Dehumidi-fication	Enable/disable Dehumidification operation
ENST	Enable Standby Mode	Enable/disable Standby Mode
EQDY	Equipment Delay	Set Equipment Delay time (minutes)
EVAL	Start H20 Evalu-ation	Set Offset Temperature to Start Water Evaluation for 2-pipe FCU (°)
EXIT	Exit	End configuration
FNDY	Fan Off Delay	Set Fan Off Delay time (minutes)
FNHT	Fan Active In Heat	Select Fan Off or Auto in Heat mode
FNOC	Fan On During Occupied Mode	Enable/disable Fan On (continuously) during Occupied mode
FNTP	Fan Type	Set the fan type in VAV applications (None, Series, or Parallel)
FSPD	Fan Speeds Available	Select number of Fan Speeds Available (1, 2, or 3)
HVA	Heating Valve Action	Select Normally Closed or Normally Open valve
MAC	BACnet MAC Address	Set BACnet MAC address number
MAX	Maximum Heat-ing Setpoint	Set the highest temperature that a user can enter as the active setpoint (°)
MIN	Minimum Cooling Setpoint	Set the lowest temperature that a user can enter as the active setpoint (°)
MNCL	Minimum Cooling Airflow	Set Minimum Cooling Airflow limit (cfm)
MNDC	Minimum DAT	Set Minimum Discharge Air Temperature (°)
MNDM	Minimum Econ Damper	Set Minimum Economizer Damper position (%)
MNFN	Min. Fan Speed	Set Minimum Fan Speed (%)
MNHT	Minimum Heating Airflow	Set Minimum Heating Airflow (cfm)
MXCL	Maximum Cooling Airflow	Set the maximum limit for cooling airflow (cfm)
MXDT	Maximum DAT	Set Maximum Discharge Air Temperature (°)

DIAGRAM AND CHART COLOR CODE
Advanced Menu
Balancing (VAV) Menu
Communications Menu
Navigation and Password Entry Items
Restore (Applications, Units, and Defaults) Menu
Setpoint Menu
System Menu

MXHT	Maximum Heating Airflow	Set Maximum Heating Airflow limit (cfm)
MXFN	Max. Fan Speed	Set Maximum Fan Speed (%)
OCCL	Occupied Cooling Setpoint	Set the cooling setpoint used as the active setpoint when the the space is occupied (°)
OCHT	Occupied Heating Setpoint	Set the heating setpoint used as the active setpoint when the the space is occupied (°)
OVRD	Override Mode	Enable/disable local unoccupied override mode
OVRT	Override Timer	Set Local Unoccupied Override Timer after override has been initiated (minutes)
PKFT	Primary K Factor	Enter the K-factor supplied by the manufacturer of the VAV terminal unit
PMAX	Primary Measured Max. Airflow	Set value for either the cooling or heating maximum airflow in primary duct (cfm)
PMIN	Primary Measured Min. Airflow	Set value for either the cooling or heating minimum airflow in primary duct (cfm)
PRI	Primary	Select Primary duct to balance
PSW1	Password Level 1	Set Password 1 (entering four zeros removes the password)
PSW2	Password Level 2	Set Password 2 (entering four zeros removes the password)—see **(Unknown) Password Is Required on page 42**
RHTP	Reheat Type	Select the reheat type for none, staged, modulating (0–10 VDC actuator), floating (tri-state actuator), or time proportional (thermal wax actuator)
RSTR	**Restore (Menu)**	Select application, select English/Metric units, and restore STPT, SYST, and BLNC menu items to factory default settings
RVA	Reversing Valve Action	Set Reversing Valve Action (active during cooling or active during heating)—see **Reversing Valve Action (HPU) on page 61**
SEC	Secondary	Select Secondary duct to balance
SKFT	Secondary K Factor	Enter the K-factor supplied by the manufacturer of the VAV terminal unit for the second duct of a dual duct system
SMAX	Secondary Measured Max. Airflow	Set value for either the cooling or heating maximum airflow in secondary duct (cfm)
SMIN	Secondary Measured Min. Airflow	Set value for either the cooling or heating minimum airflow in secondary duct (cfm)
STBT	Standby Timer	Set motion sensor inactivity time before triggering Standby mode (minutes)
STDY	Stage Delay	Set Stage Delay time (minutes)
STBO	Standby Offset	Set the offset value (°) added or subtracted (depending on mode) from the value of the active setpoint
STPT	**Setpoint Menu**	Enter temperature setpoints and limits
SYST	**System Menu**	Configure basic HVAC application functions
UNCL	Unoccupied Cooling	Set the cooling setpoint used as the active setpoint when the the space is unoccupied (°)
UNHT	Unoccupied Heating	Set the heating setpoint used as the active setpoint when the the space is unoccupied (°)
VA	Valve Action	Select Normally Closed or Normally Open valve

Restore (RSTR) and Application/Units Selection

The Restore (RSTR) menu performs three functions:

- Selects the application (dependent on controller model)
- Selects the units (English, Metric, or mixed)
- Restores the items in the Setpoint, System, and Balance menus to their factory defaults. (Communication settings and user-defined passwords are not affected.)

See **Controller Configuration with STE-9xx1 Menus on page 27**.

To perform one or more of these functions, follow the steps below.

NOTE: **Changing the application or the units will ALSO restore the factory defaults to the Setpoint, System, and Balance menu items!** Select the desired **application and units first,** let the controller **restart** (at least 30 seconds), and **then continue configuring** the applicable Setpoint, System, and Balance items.

NOTE: To restore a configured controller to the factory defaults while **keeping the existing application and units**, restore with a different application and/or units first. After the controller restarts, change the application and/or units back to the original setting. After the controller restarts again, continue with the configuration.

APPLICATIONS, UNITS, AND DEFAULTS STEPS	DISPLAY
1. Start at the temperature display.	72 °F 12:51 PM
2. Press the Up and Down buttons together for at least 6 seconds and enter the level 2 password. The display changes to CNFG after Password 2 is correctly entered. See **(Unknown) Password Is Required on page 42**.	PSW2 0000
3. At the CNFG display, press the Enter button.	CNFG
4. At the STPT display, press the Up or Down button to advance to the RSTR display.	STPT
5. With RSTR flashing, press the Enter button. The application and units will start flashing. (If you do **NOT** want to restore application settings to the factory defaults, **do NOT press the Enter button while the application and units are flashing**. Let the display time out instead—about 30 seconds.)	RSTR HPU ENG
6. With the application and units flashing, use the Up and Down buttons to find the correct choice and press the Enter button. With RSTR flashing, either navigate to the Exit menu (using the Up or Down button) or let the menu time out (about 30 seconds).	EXIT

See also **VAV Airflow Balancing with an STE-9xx1 on page 32**.

VAV Airflow Balancing with an STE-9xx1

NOTE: This procedure is very similar to that of using an STE-8x01 NetSensor to balance a KMC SimplyVAV controller. See the balancing video and other information on **www.simplyvav.com/balance/**.

The airflow balancing/calibrating procedure requires the following:

- An STE-9000 series NetSensor. If the system does not include one of these sensors, temporarily disconnect any STE-60xx sensor connected to the Room Sensor port and connect an STE-9xx1 as a service tool.
- The level 2 password.
- A flow hood or other accurate method to measure airflow.
- The engineering design specifications for the minimum and maximum airflow setpoints.
- The K factor for the box (see **Appendix: K Factors for VAV on page 107**). The **K factor value is first entered in the SYST menu** (see **Controller Configuration with STE-9xx1 Menus on page 27**).

NOTE: For a heating-only or cooling-only VAV unit, the airflow setpoints for the unused mode must be set within the range of the mode in use. Failure to set the unused setpoints correctly will result in unpredictable or erroneous air balancing settings. See **Controller Configuration with STE-9xx1 Menus on page 27**.

NOTE: Starting the balancing procedure erases all previous airflow correction factors. The airflow readings displayed by the STE-9xx1 are the actual uncorrected airflow readings as measured by the controller. Sensor calibration must be done at both Minimum and Maximum settings.

NOTE: Once the following procedure is started, all steps must be completed in order.

PROCEDURES AND STEPS	DISPLAY
Select balancing mode	
1. Start at the temperature display.	72 °F 1251 PM
2. Press and hold the Up and Down buttons together for at least 6 seconds and enter the level 2 password. The display changes to CNFG after Password 2 is correctly entered. See **(Unknown) Password Is Required on page 42**.	PSW2 0000
3. From the CNFG display, press the Up or Down buttons to advance to the BLNC display.	CNFG
4. Press the Enter button to select BLNC. The display advances to PRI.	BLNC
5. Press the Enter button to select PRI.	PRI

Measure and enter maximum primary airflow	
NOTE: The display begins flashing PMAX and displays the (uncorrected) actual airflow at the bottom. The airflow will attempt to stabilize on the highest value for either the cooling or heating maximum airflow even if only one mode is operational. 6. Wait for the maximum airflow value to stabilize. 7. With a flow hood, measure the actual airflow. 8. Press the Enter button to advance to the entry display. PMAX stops flashing. 9. Press the Up or Down button to enter the measured airflow. 10. Press the Enter button to save the measured airflow. The display changes to PMIN.	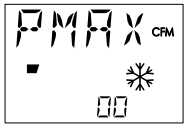
Measure and enter minimum primary airflow	
NOTE: The display begins flashing PMIN and displays the (uncorrected) actual airflow at the bottom. The airflow will attempt to stabilize on the lowest value for either the cooling or heating maximum airflow even if only one mode is operational. 11. Wait for the minimum airflow value to stabilize. 12. With a flow hood, measure the actual airflow. 13. Press the Enter button to advance to the entry display. PMIN stops flashing. 14. Press the Up or Down button to enter the measured airflow. 15. Press the Enter button to save the measured airflow. The display changes to PRI.	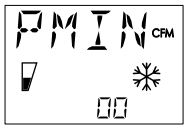
Continue for dual duct or exit	
16. Press the Up or Down button to advance to one of the following choices and then press the Enter button: • BACK to choose another function. • EXIT to return to the temperature display. • SEC to balance the secondary VAV for dual duct systems. This option is available only on dual duct models. (Continue on the steps on the next page.)	

Measure and enter maximum secondary airflow	
NOTE: If SEC is selected, the display begins flashing SMAX and also displays the (uncorrected) actual airflow at the bottom. The airflow will attempt to stabilize on the highest value for either the cooling or heating maximum airflow even if only one mode is operational. 17. Wait for the maximum airflow value to stabilize. 18. With a flow hood, measure the actual airflow. 19. Press the Enter button to advance to the entry display. SMAX stops flashing. 20. Press the Up or Down buttons to enter the measured airflow. 21. Press the Enter button to save the measured airflow. The display changes to SMIN.	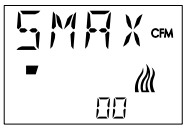
Measure and enter minimum secondary airflow	
NOTE: The display begins flashing SMIN and also displays the (uncorrected) actual airflow at the bottom. The airflow will attempt to stabilize on the lowest value for either the cooling or heating maximum airflow even if only one mode is operational. 22. Wait for the minimum airflow value to stabilize. 23. With a flow hood, measure the actual airflow. 24. Press the Enter button to advance to the entry display. SMIN stops flashing. 25. Press the Up or Down buttons to enter the measured airflow. 26. Press the Enter button to save the measured airflow.	
27. Press the Up or Down button to advance to one of the following (and then press the Enter button): • BACK to choose another function. • EXIT to return to the temperature display.	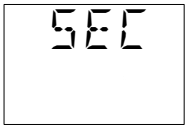

See also **Restore (RSTR) and Application/Units Selection on page 31**.

RESETTING AND TROUBLESHOOTING

Resetting Controllers

Types of Reset

If a controller is not operating correctly, reset the controller. Any reset interrupts normal operation, and several types of reset exist:

- A **warm start** is generally the least disruptive option (restarting normal operation the quickest).
- If problems still persist, try a **cold start**. (This should also be used after a new Control Basic program is loaded and compiled.)
- To **restore** (STPT, SYST, and BLNC) configuration values to their **factory defaults**, see **Restore (RSTR) and Application/Units Selection on page 31**.

Warm and Cold Starts

⚠ CAUTION

During a restart, the analog outputs go to zero, and triacs go to their normally open state. A restart is a process that lasts several seconds, and it may result in several changes of state for an output, turning equipment off and on abruptly. Before resetting the controller, manually override equipment as needed. If a large fan is controlled by the controller, for example, set a minimum off time.

A **WARM start** does the following in the controller:

- Zeroes out objects (during the restart process).
- Restores present values of objects to **their last values before the restart** (until they are updated by the controller's programs).
- Restarts the controller's Control Basic programs.
- Leaves configuration and programming intact.

To perform a warm start, do one of the following:

- Momentarily remove power to the controller.
- From TotalControl, Connect, or Converge, select Reinitialize Device > Warm Start.

NOTE: When power is restored after an outage, the controller will attempt a warm start as long as the values in RAM are retained (up to about six hours). If the RAM checksum test fails, a cold start is done instead.

NOTE: In custom Control Basic programming, using the POWERLOSS command may be desirable to determine start-up conditions and to take appropriate actions—see the Help system in KMC Connect or TotalControl for more information.)

A **COLD start** does the following in the controller:

- Zeroes out objects (during the restart process).
- Returns all present values of objects to **their relinquished defaults** (until they are updated by the controller's programs).
- Restarts the controller's Control Basic programs.
- Leaves configuration and programming intact.

To perform a cold start, from TotalControl, Connect, or Converge, select Reinitialize Device > Cold Start.

Troubleshooting

Communication Issues

Communication Issues—CAN (Expansion Module)

- See **EIO LEDs (Green) on page 8**.
- See also **Ready (Power/Status) LED (Green) Issues on page 37**.
- Check that EOL switches are correctly positioned on the controller and each module. See **EOL (End of Line) Termination Switches on page 21**.
- Check for correct wiring and phasing.
- Check addressing switches. See the **CAN-5900 Series Installation Guide**.

NOTE: If the **CAN-5901 loses EIO communication** with the BAC-5900 series controller, the CAN-5901 **retains the last present value for the outputs** until communication is restored or power is lost. When communication is restored, the outputs will go to whatever state the controller is commanding them to be at that time. (For CAN-5901 modules with firmware 0.0.0.1, about 30 seconds after communications loss, the module turns all of its outputs **off** until communication is restored.)

Communication Issues—Ethernet

⚠ CAUTION

On Conquest "E" models, do NOT plug the cable meant for Ethernet communications into the Room Sensor jack. The Room Sensor port powers a NetSensor, and the supplied voltage may damage an Ethernet card, switch, or router to which it is accidentally connected. See Illustration: Inputs and Ports (Early BAC-9001CE) on page 9.

- Check that the Ethernet connection cable is plugged into the Ethernet port and not the Room Sensor port.
- See **Ethernet LEDs (Green and Amber) Issues on page 37**.
- Use a BAC-5051E router to check route status for network issues such as duplicate network numbers.
- Restart the controller. See **Resetting Controllers on page 35**.
- See also the Troubleshooting section in the **Conquest Ethernet Controller Configuration Web Pages Application Guide**.

Communication Issues—MS/TP

- See **LED Indicators and Isolation Bulbs Issues on page 37**.
- Check that EOL switches are correctly positioned at each controller on the network. See **EOL (End of Line) Termination Switches on page 21**.
- Check for correct wiring and phasing.
- Check the Max Master setting in a configuration tool. It should be (just) higher than the highest numbered controller.
- See **Planning BACnet Networks (Application Note AN0404A)**.
- Check the baud rate setting (which should be the same on all the controllers on the network).
- See the **MS/TP Troubleshooting Using a Multimeter - Bifurcation** video and downloadable troubleshooting guide.

Communication Issues—NFC (Near Field Communication)

NOTE: To meet FCC regulations and enhance data communication reliability, NFC operation should only be used when the controller is **not** powered.

- Hold the NFC-enabled phone or HPO-9003 NFC-Bluetooth/USB module (fob) as close as possible over the NFC symbol on the controller or unpacked controller box.
- For no NFC communication with a previously configured controller, check that NFC has not been disabled. See **NFC (Near Field Communication) on page 26**.
- For other issues, see the **KMC Connect Lite User Guide**.

LED Indicators and Isolation Bulbs Issues

NOTE: For general information about indicators, see **(Status) Indicators on page 7**.

Ready (Power/Status) LED (Green) Issues

- Within a few seconds after power is first applied, the green Ready (power/status) LED near the power terminals will begin flashing (on for a second and then off for a second) if the device is functioning normally.
- If it is not illuminated, check the power and connections to the controller.

Ethernet LEDs (Green and Amber) Issues

The Ethernet connector has two built-in LEDs:

- The amber LED illuminates when the controller has power and is communicating at its highest speed (100BaseT). (It is off when the connection is communicating at 10BaseT.)
- The green LED will blink at a rate in accordance to Ethernet traffic.
- If neither LED is illuminated, check the power and Ethernet connection.

MS/TP LEDs (Amber) Issues

NOTE: The MS/TP network has an amber LED that flickers as it receives and passes the token during communication with the network. When the controller is powered up (but not communicating on the MS/TP port), these amber LEDs will flash slowly, about once per second. When the MS/TP port establishes communications with the network, the amber LED for that MS/TP port will flash rapidly (multiple times a second) as it receives and passes the token.

If the amber LED is not periodically flashing rapidly:

- Check the isolation bulbs. See **Network Isolation Bulbs (HPO-0055) Issues on page 37**.
- Check the network connections and configuration.
- Restart the controller.

Network Isolation Bulbs (HPO-0055) Issues

MS/TP and CAN bus networks have an assembly of two isolation bulbs located near the network terminals. Normally the bulbs are not illuminated.

- If one or both bulbs are illuminated, it indicates the network is improperly phased (the ground potential of the controller is not the same as on other controllers on the network). Disconnect the power and check the MS/TP and power connections.

- If one or both bulbs are blown, it indicates the voltage or current on the network exceeded safe levels. Correct the conditions and replace the bulbs.

Hardware Issues

Broken or Lost Terminals or DIN Clips

- Replace the item from the HPO-9901 kit.

Burned Out Network Isolation Bulbs

- See **Network Isolation Bulbs (HPO-0055) Issues on page 37**.

Lost Jumper

- Replace with an HPO-0063.

NOTE: The (watch dog) jumper on the BAC-9000 series VAV controllers should never be removed.

NOTE: An output jumper under the cover of a BAC-5900 series controller should only be removed when installing an HPO-6700 series output override board in its slot.

Input Issues

⚠ CAUTION

On Conquest "E" models, do NOT plug the cable meant for Ethernet communications into the Room Sensor jack. The Room Sensor port powers a NetSensor, and the supplied voltage may damage an Ethernet card, switch, or router to which it is accidentally connected. See Illustration: Inputs and Ports (Early BAC-9001CE) on page 9.

Demand Control Ventilation (DCV) Is Not Available or Working Properly

NOTE: For details, see **STE-93xx/95xx CO2 Sensor and DCV on page 11**.

- With firmware **R1.0.0.6** or later, **built-in** DCV (Demand Control Ventilation) with a CO_2 sensor is available **only** when an economizer is enabled in BAC-93xx HPU or RTU applications and an STE-93x1/95x1 NetSensor is connected to the Room Sensor port. Upgrade to the latest firmware if needed.
- For other applications and/or controllers, application programming that references the CO_2 value may be added to the controller either by modifying the factory application programming or by adding Control Basic logic in an unused program.
- Ensure that **DCV is enabled** (under CO2 in the NetSensor System menu or BV29).
- Adjust the CO_2 **setpoint** (under CO in the NetSensor Setpoint menu or AV59) and/or **range** (under CORA in the NetSensor Setpoint menu or AV58).
- Check that conditions for **self-calibration** are met.
- Check that AV57 is not out of service.

Input Values Are Outside the Expected Range

- Check that the cable to the NetSensor is plugged into the Room Sensor port and not the Ethernet port.
- After initial power-up, allow time for readings to stabilize.
- Using KMC Connect, KMC Converge, or TotalControl, check input configuration. Check that the input is not configured as Out Of Service.
- Check input wiring.

NOTE: Faulty wiring on one input can potentially cause fluctuating input values on other inputs.

- Check connected sensors (see **Illustration: Input Voltages on page 39**).

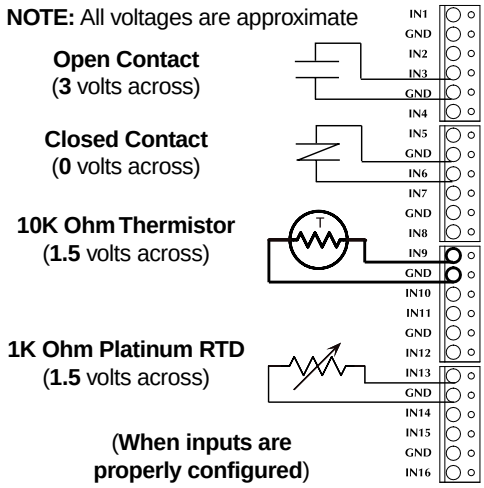

Illustration: Input Voltages

Motion/Occupancy Sensor (STE-92x1/95x1) Does Not Work

- Check that the cable to the NetSensor is plugged into the Room Sensor port and not the Ethernet port.
- After an initial power-up or restart, the motion/occupancy sensor requires about 30 seconds before it will begin responding to motion.
- In standard application programs, the motion/occupancy sensor initiates override only during "off" times in the schedule. See **Configuration/Programming Issues on page 42**.
- Check that the motion sensor is enabled and detects motion.
- See the Motion Sensing and Troubleshooting (Location) sections in the **Room Sensor and Thermostat Mounting and Maintenance Application Guide**.
- Using KMC Connect, KMC Converge, or TotalControl, check input configuration. Check that the value objects (e.g., BV6, MSV1) controlling occupancy mode are not configured as Out Of Service.

NOTE: The STE-92x1/95x1 motion sensor does not have a corresponding binary input object in the controller. The motion sensor writes to BV6.

Temperature Reading Is Incorrect

- Check that the cable to the NetSensor is plugged into the Room Sensor port and not the Ethernet port.
- After initial power-up, allow time for readings to stabilize.
- Check that the correct °F/°C temperature scale is selected. (Changing the temperature scale in the configuration, resets the controller to its factory default.)
- If the discrepancy is small, adjust the calibration offset in the configuration setup using KMC Connect, KMC Converge, or TotalControl.
- Using KMC Connect, KMC Converge, or TotalControl, check the AV1 and (for STE-6010/6014/6017 sensors) the AI1 configuration. Check that the objects are not configured as Out Of Service.
- Check that the sensor is properly mounted in a proper location. See the **Room Sensor and Thermostat Mounting and Maintenance Application Guide**.
- See also **Input Values Are Outside the Expected Range on page 38**.

Temperature Setpoint Is Not Maintained

- Check inputs and outputs. See **Input Values Are Outside the Expected Range on page 38** and **Output Issues on page 40**.
- Check schedules. See **Schedules Do Not Operate Properly on page 43**.
- Check that room temperature is being sensed correctly. See **Temperature Reading Is Incorrect on page 39**.
- Using KMC Connect, KMC Converge, or TotalControl, check output configuration. Check that the corresponding analog value object (e.g., AV3, AV4) is not configured as Out Of Service.
- In 2-pipe FCU applications, check the changeover water temperature sensor and wiring.
- If the HVAC system has trouble recovering from the unoccupied setpoint to the occupied setpoint during very cold weather, decrease the amount the setback.
- If the space temperature is overshooting the setpoint or is oscillating, try increasing the proportional band by a degree. If the problem persists, try increasing the integral value slightly (up to 20%). If the problem still persists, try setting the integral value to 0. (The optimal integral value is dependent on the characteristics of the particular space and HVAC system.)

Output Issues

Analog Output Does Not Work

⚠ CAUTION

Do not connect 24 VAC to an analog output ground. This is not the same as a relay's switched common.

NOTE: For an output on a CAN-5900 series expansion module, see also **Communication Issues—CAN (Expansion Module) on page 36**.

NOTE: Excessive loads will be clamped at the maximum. External relays may chatter or fail to latch if they need more current than the maximum allowed.

- Check for proper output object configuration.
- Using KMC Connect, KMC Converge, or TotalControl, check the outputs. Check that the output object (e.g., AO7) is not configured as Out Of Service.
- Check the Control Basic programs, loop objects, and schedules.
- Check that the output is on.
- Check the current draw of the load. Substitute an output device that draws less current.

Relay or Triac (HPO-670x Override Board) Does Not Work

⚠ CAUTION

Relays and triacs are for Class-2 voltages (24 VAC) only. Do not connect line voltage to them! Do not attach a device that draws more than the maximum current rating.

NOTE: Triacs are for AC only. See the **HPO-6700 Series Output Override Boards Data Sheet**.

NOTE: For an HPO-6701 triac output override board on a CAN-5900 series expansion module, see also **Communication Issues—CAN (Expansion Module) on page 36**.

- Check for proper output object configuration.
- Using KMC Connect, KMC Converge, or TotalControl, check the outputs. Check that the output object (e.g., BO4) is not configured as Out Of Service.
- Check the current draw of the load. Substitute an output device that draws less current.
- Check that the output is on.

NetSensor Display is Blank

⚠ CAUTION

Do NOT plug the cable meant for Ethernet communications into the Room Sensor jack. The Room Sensor port powers a NetSensor, and the supplied voltage may damage an Ethernet card, switch, or router to which it is accidentally connected. See Illustration: Inputs and Ports (Early BAC-9001CE) on page 9 and Illustration: Room Sensor and Dual Ethernet Ports on page 9.

- Check that the cable from the NetSensor is plugged into the **Room Temperature port** and not an Ethernet port.
- Check that the cable is a standard Ethernet patch cable and not a crossover cable.
- Unplug the NetSensor for a moment and plug it back in.
- See Power Issues on page 41.
- Check (using KMC Connect, TotalControl, or Converge) that Screen Blanking has not been enabled in the NetSensor object. For more information, see the video **Enabling Screen Blanking on STE-9000 Series NetSensor** on **KMC's YouTube channel**.

Power Issues

NOTE: When the controller is powered, the green LED above the power terminals flashes slowly.

- See Power (Controller) Connections on page 23.
- Check for a tripped circuit breaker to the transformer.
- Check for proper supply voltage and phasing from the transformer (or power supply) and that the transformer has enough capacity (VA) for all connected devices. See the devices' respective data sheets and **Tips for Connecting 24-Volt Power Application Note (AN0604D)**.

NOTE: Wiring must be adequate to avoid excessive voltage drop on long runs! Allow plenty of "cushion." A voltage meter may be too slow to register transient dips or peaks during startup.

VAV Airflow Issues

- Hold down the gear disengagement lever and check that the damper moves freely to each end of its travel.
- Check the controller configuration.
- Check for 24 VAC at the terminals **~** (phase) and the **⊥** (common). Tolerance can be −15% to +20% (20.4 to 28.8 VAC). If using the same transformer for more than one controller, the phase and common must be the same on each device. See Power Issues on page 41.
- Check that the V-clamp on the actuator shaft is secure (not slipping).
- Check that the tubing to the differential pressure sensor is not kinked, pulled off, or leaking.
- Check that the flow sensor in the duct is not dirty.

- Check for adequate airflow in the duct leading to the controller.
- Review the sequence of operations in **VAV (Variable Air Volume) on page 70**.
- To properly set up a VAV controller, the correct K factor for the VAV box must be entered into the controller. If this information is unknown, see **Appendix: K Factors for VAV on page 107**.

Configuration, Programming, and Operation Issues

NOTE: Use the relevant software or app to perform the following tasks.

Control Basic Programs Do Not Work

NOTE: Standard configurations are available through the KMC application configuration wizards in KMC Connect, Converge, or TotalControl. Beyond these standard configurations, custom changes can be added to a controller using Control Basic.

NOTE: Customized programs are the responsibility of the user. KMC Controls does not provide support for such programs.

- Check that program objects are not configured as Out Of Service.
- Check that program objects are running and they have Run on Cold Start selected.
- Check the Control Basic code for errors in syntax, priority levels, and other issues. For assistance with Control Basic commands, see the Help system in KMC Connect or TotalControl.

Configuration/Programming Issues

- Check for proper connections between the controller and the app or software.
- See the help information in the documentation for the app or software. See **Configuring, Programming, and Designing on page 25**.
- To restore (STPT, SYST, and BLNC) configuration values to their factory defaults, see **Restore (RSTR) and Application/Units Selection on page 31**.

Objects Are Missing

- For missing objects (e.g., inputs and outputs on CAN-5901 expansion modules, trend log multiples, and other objects that have been accidentally deleted), use KMC Connect, Converge, or TotalControl to create objects. See **BACnet Objects List on page 81**.

(Unknown) Password Is Required

- A **default** Level 2 password is required for initial configuration when using a STE-9000 series NetSensor or the KMC Connect Lite NFC app. See the **Conquest Controllers Default Password Technical Bulletin (TB150716)** by logging into the **KMC web site** and looking at the downloadable documents for any of the KMC Conquest controllers or STE-9000 series NetSensors.

NOTE: If a Level 1 or 2 password is configured for 0000 in the Advanced menu, that password screen (for later user setpoint changes or configuration) is bypassed in an STE-9000 series NetSensor.

NOTE: To enhance security after configuration, change the Level 2 password for the controllers in the Advanced menu. **Be sure to document the new password for future reference!**

- If a **user-configured** Level 2 password has been forgotten, use KMC Connect to view the password in the NetSensor object screen. In KMC Connect, both levels of passwords can be viewed and changed as desired without having to first enter either one.

Schedules Do Not Operate Properly

- Check for proper schedule configuration.
- Check the controller's time. See **Time and/or Date Are Not Correct on page 43**.
- Using KMC Connect, KMC Converge, or TotalControl, check the outputs. Check that the schedule object is not configured as Out Of Service.

Time and/or Date Are Not Correct

NOTE: When powered up after losing the RTC (Real Time Clock) time, the time and date will revert to the default and must be set manually or by synching to the system time.

- Set the time and date using one of the configuration tools.
- Check the DST (Daylight Saving Time) settings.
- Check the UTC Offset.

Trends Do Not Work

- Check the trend log object properties for proper configuration.
- Check that the trend log object Start Time and Stop Time are valid in the configuration.
- Check that Log Enable is selected.
- Check that the log is not full because Stop When Full is selected.
- Using KMC Connect, KMC Converge, or TotalControl, check that trend log objects are not configured as Out Of Service.

Web Page Issues (Ethernet Models)

- Restart the controller. See **Resetting Controllers on page 35**.
- See **Communication Issues—Ethernet on page 36**.
- See the **Conquest Ethernet Controller Configuration Web Pages Application Guide**.

Other Issues

- Thoroughly check appropriate connections, wiring, and settings.
- Reset the controller. See **Resetting Controllers on page 35**.
- Consult with the network administrator for proper network settings.
- Contact KMC Controls technical support.

MAINTENANCE AND UPGRADES

Maintenance

For controllers, no routine maintenance is required. Each component is designed for dependable, long-term reliability and performance. Careful installation will ensure long-term reliability and performance.

For STE-9000 series NetSensors, see the **Room Sensor and Thermostat Mounting and Maintenance Application Guide**.

Controller Upgrades and Cross-References

KMC Conquest controllers are compatible with any existing BACnet networks, but some changes must be made:

- **Conquest controllers require Conquest NetSensors.** If an older KMC BACnet controller (e.g., BAC-5801) is replaced with a Conquest controller (e.g., BAC-5901), the KMD-11xx NetSensor must also be replaced with an STE-9000 series NetSensor. See **BAC-58xx/7xxx Series Controller Cross-Reference on page 45** and **KMD-11xx/12xx NetSensor Cross-Reference on page 45**.
- The **NetSensor cable must also be replaced with a Category 5 or better Ethernet patch cable** (such as an **HSO-9001**, **HSO-9011**, or **HSO-9012**) of equivalent length.

See also **Specifications, Accessories, and Installation on page 4**.

NOTE:

- For the new controllers, **inputs and outputs** may be different.
- Before reusing any **custom Control Basic** programs from older controllers, carefully evaluate them and make any needed modifications.
- Before reusing any **graphics**, evaluate all points and update them as necessary.

BAC-58XX/7XXX SERIES CONTROLLER CROSS-REFERENCE			
Model Number	**Comments**	**Replacement Model Number***	**Comments**
BAC-5801	8 x 8 General Purpose	BAC-5901C	8 x 8 General Purpose w/ RTC
BAC-5802	8 x 8 General Purpose w/ RTC		
BAC-5831	16 x 12 General Purpose w/ RTC	BAC-5901C with (1) CAN-5901	16 x 16 General Purpose w/ RTC
BAC-7001/7003	VAV Controller, 18°/minute	BAC-9001	VAV controller, 60°/minute
BAC-7051/7053	VAV Controller, 60°/minute		
BAC-7301	AHU Controller	BAC-9301	Unitary Controller
BAC-7301C	AHU Controller w/ RTC	BAC-9301C	Unitary Controller w/ RTC
BAC-7302	RTU Controller	BAC-9301	Unitary Controller
BAC-7302C	RTU Controller w/ RTC	BAC-9301C	Unitary Controller w/ RTC
BAC-7303	FCU Controller	BAC-9301	Unitary Controller
BAC-7303C	FCU Controller w/ RTC	BAC-9301C	Unitary Controller w/ RTC
BAC-7401	HPU Controller	BAC-9301	Unitary Controller
BAC-7401C	HPU Controller w/ RTC	BAC-9301C	Unitary Controller w/ RTC
*NOTE: Replacement of a controller also requires replacement of any connected KMD-1xxx NetSensor with the equivalent STE-9xxx NetSensor (see below). Also the cable connecting the controller and NetSensor must be replaced with an equivalent length of Cat. 5 Ethernet patch cable (e.g., HSO-9001, HSO-9011, HSO-9012).			

KMD-11XX/12XX NETSENSOR CROSS-REFERENCE			
Model Number*	**Comments**	**Replacement Model Number****	**Comments**
KMD-1161	Temperature Only	STE-9001	Temperature Only
KMD-1164			
KMD-1162	Temp. Only, Hospitality***		
KMD-1181	Temp. and Humidity	STE-9021	Temp. and Humidity
KMD-1183			
KMD-1184			
KMD-1185			
KMD-1261	Temp. and Motion	STE-9201	Temp. and Motion
KMD-1281	Temp., Humidity, and Motion	STE-9221	Temp., Humidity, and Motion
*NOTE: Replacement of a KMD-1xxx NetSensor with the equivalent STE-9xxx NetSensor also requires replacement of the controller (see above). Also the cable connecting the controller and NetSensor must be replaced with an equivalent length of Cat. 5 Ethernet patch cable (e.g., HSO-9001, HSO-9011, HSO-9012). The button interface on the new NetSensor will be different.			
**NOTE: For color choice, the default color is Light Almond. For white, add a W to the end (e.g., STE-9001W).			
***NOTE: KMD-1162 Hospitality NetSensors have slide switches for fan speed and heat/cool/off selection. An STE-9001 can perform similar functions but has a very different user interface.			

SEQUENCES OF OPERATIONS

AHU (Air Handling Unit)

See **RTU (Roof Top Unit) or AHU (Air Handling Unit) on page 63**.

CAV (Constant Air Volume)

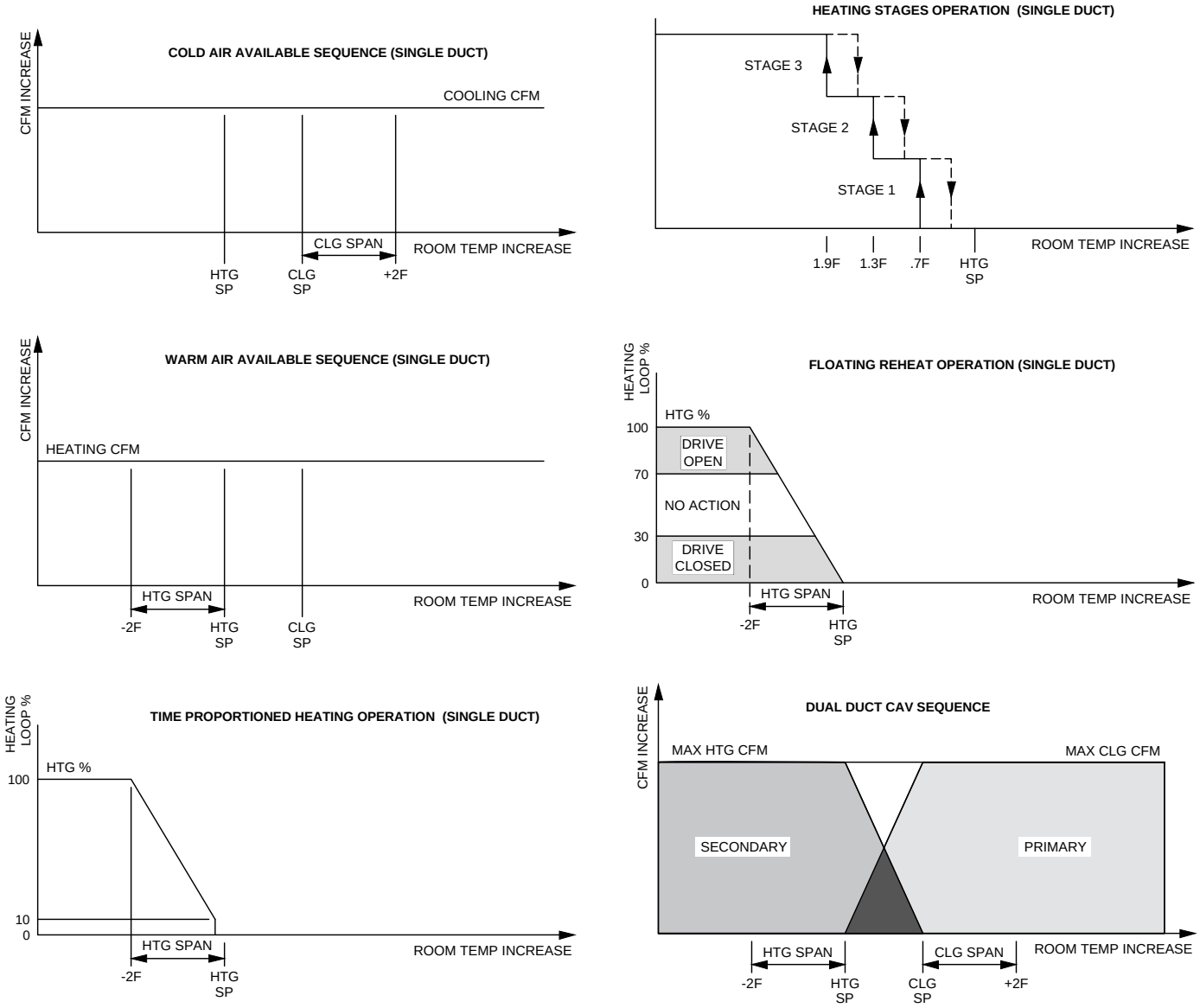

Illustration: VAV Operations

See relevant sections of **VAV (Variable Air Volume) on page 70** for additional descriptions.

FCU (Fan Coil Unit)

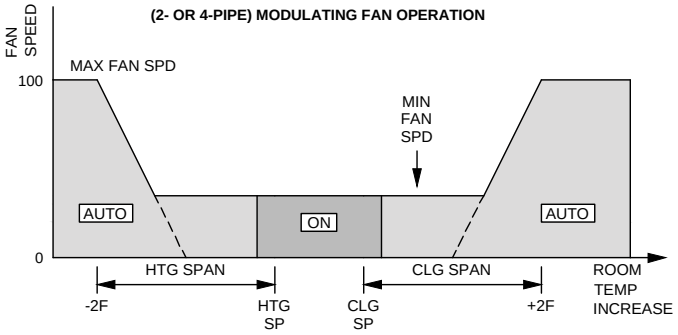

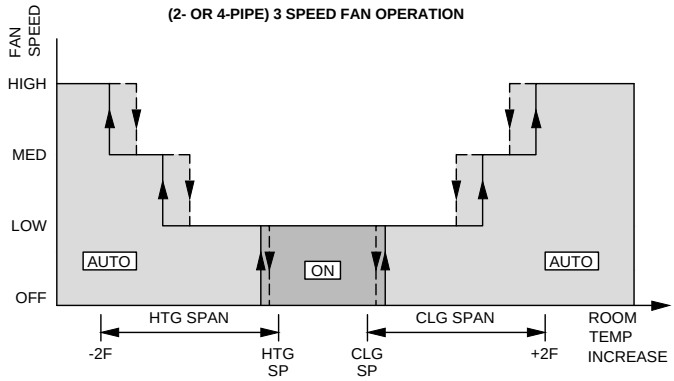

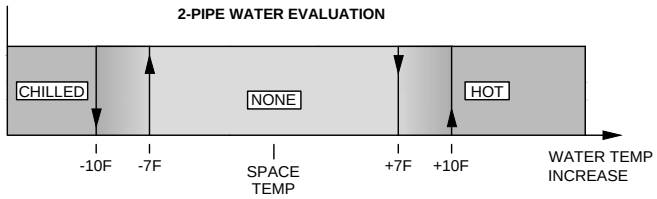

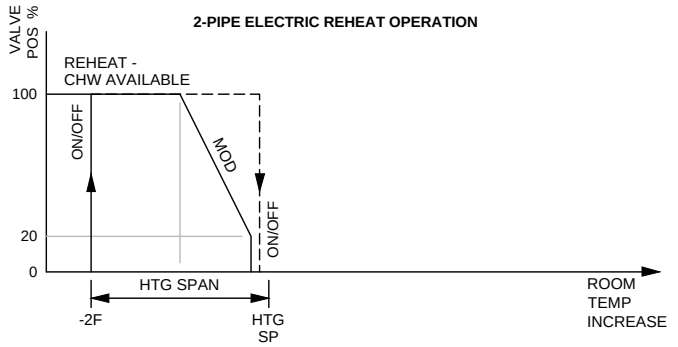

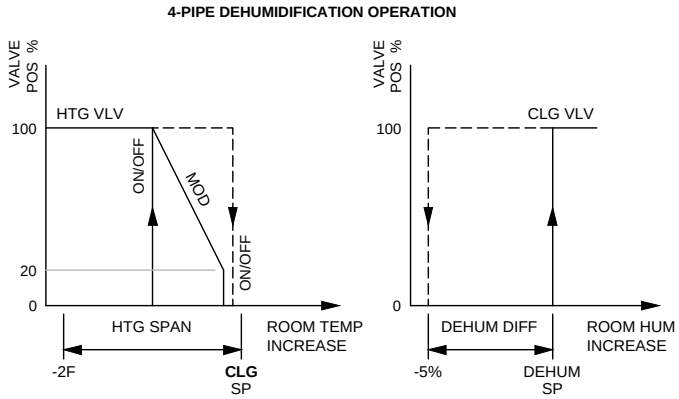

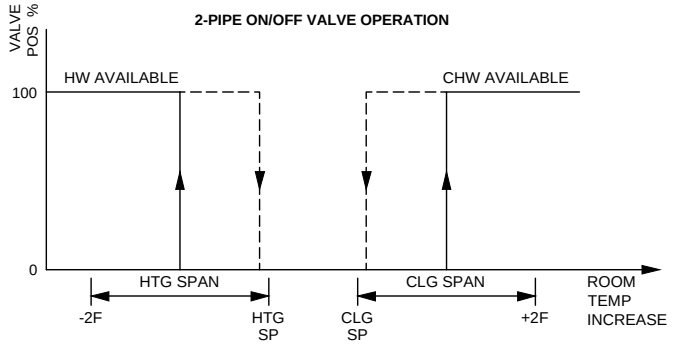

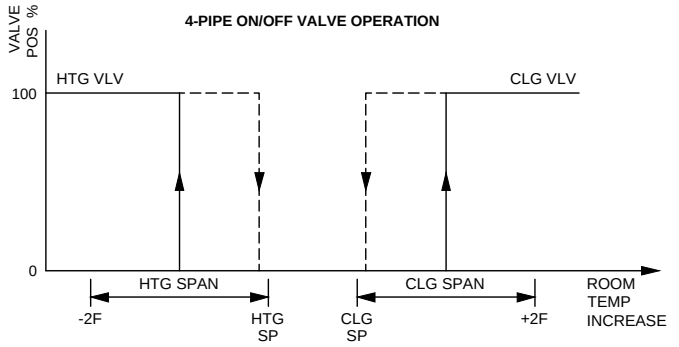

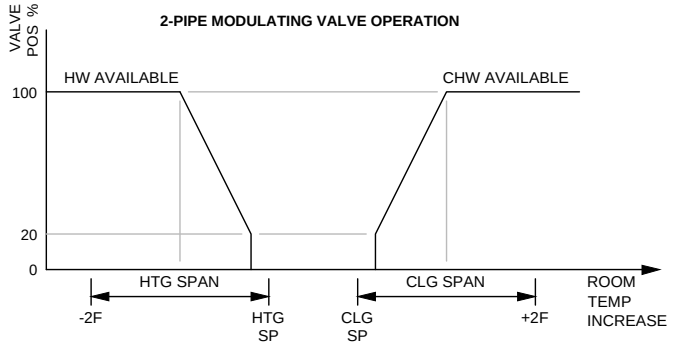

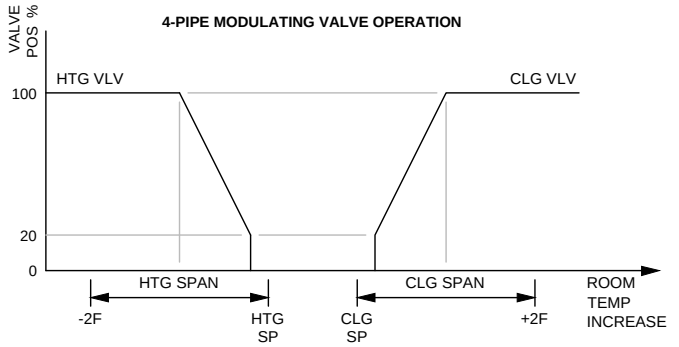

Illustration: FCU Operations

Introduction (FCU)

Topics in this section cover the FCU sequences of operation for the KMC Conquest BAC-9301 unitary controller. These are advanced topics for controls technicians and engineers.

NOTE: For sequence of operations with charts and wiring diagrams, see also the FCU submittal sheets (see **Submittal Sheets (Diagrams and Operation) on page 5**).

NOTE: See also **BACnet Objects List on page 81** for more information about objects listed in the descriptions.

Room Temperature Setpoints (FCU)

Types of Setpoints

There are four temperature setpoints each for heating and cooling for a total of eight setpoints.

- Active cooling
- Occupied cooling
- Unoccupied cooling
- Standby cooling
- Active heating
- Occupied heating
- Unoccupied heating
- Standby heating

These setpoints are based on a user-entered value or the occupancy state and standby value described in **Occupancy, Motion Sensing, and Standby (FCU) on page 49**.

Active Setpoint

The active setpoint is the current setpoint being used for control. The active setpoint is determined according to the occupancy state (see **Occupancy, Motion Sensing, and Standby (FCU) on page 49**):

- When the space becomes **Occupied**, the Occupied Cooling Setpoint (AV5) is placed in the Active Cooling Setpoint (AV3), and the Occupied Heating Setpoint (AV6) is placed in the Active Heating Setpoint (AV4).
- When the space becomes **Unoccupied**, the Unoccupied Cooling Setpoint (AV7) is placed in the Active Cooling Setpoint (AV3), and the Unoccupied Heating Setpoint (AV8) is placed in the Active Heating Setpoint (AV4).
- When the space enters **Standby**, the controller calculates the active setpoint by adding or subtracting (depending on mode) the Standby Offset (AV12) from the relevant occupied (but not unoccupied) setpoint. Standby is only applied to the occupied setpoint and thus is only valid when the schedule is active.

A user with a level 1 password (if a level 1 password is configured) can enter an active setpoint from the KMC Conquest STE-9000 series NetSensor (via AV3 and AV4). The local override is valid only when the schedule is inactive. This change is for a limited time or until the next time the occupancy state changes.

For display and control loop calculations, the active setpoint value is compared to the value of the space temperature variable AV1, which is taken from the physical temperature input AI1.

Occupied Setpoint

This temperature setpoint is entered by the controls technician during controller setup and system commissioning. This is the setpoint used when the system is occupied, which is usually controlled by the schedule in the controller.

Unoccupied Setpoint

This temperature setpoint is entered by the controls technician during controller setup and system commissioning. This is the setpoint used when the system is unoccupied, which is usually controlled by the schedule in the controller.

Standby Setpoint

This setpoint is used when the controller is in the standby state. It is a calculated from the relevant occupied setpoint value and the Standby Offset value. The Standby Offset value is entered by the controls technician during controller setup and system commissioning. See **Occupancy, Motion Sensing, and Standby (FCU) on page 49**.

Setpoint Limits

Programming in the controller limits the setpoint entry so that a heating setpoint is not set higher than its corresponding cooling setpoint.

If a user adjusts a setpoint so that it falls within the range set by the value of Minimum Setpoint Differential, the corresponding setpoint is changed to maintain the differential. For example, the Minimum Setpoint Differential is 4° F and the Occupied Heating setpoint is 70° F. If the user lowers the Occupied Cooling setpoint to 71° F, the controller recalculates the Occupied Heating setpoint and changes it to 67° F.

Occupancy, Motion Sensing, and Standby (FCU)

The controller is designed to operate as a stand-alone controller and can determine occupancy based on its internal occupancy schedule and (if connected to an STE-92x1/95x1 NetSensor) motion in the space. The controller can be in any one of the following occupancy states:

- Occupied
- Unoccupied
- Standby

The controller chooses which setpoint to use based on the occupancy and standby states. See **Room Temperature Setpoints (FCU) on page 48**.

The occupancy and standby states can also be commanded by another BACnet device or an operator workstation connected to the building automation network.

Occupied

For controllers without a connected motion sensor, the controller starts in the occupied state. If an internal schedule is enabled, the state of the schedule is set to either occupied or unoccupied as the initial state. See **Scheduling Occupancy (FCU) on page 50**.

Unoccupied

The controller changes to the unoccupied state only if the internal occupancy schedule is enabled and if the schedule is inactive.

Standby

In units with a connected motion sensor, the controller starts in standby and changes to occupied after detecting motion in the space. The controller will change from occupied to standby after a lack of motion for the period specified by the variable Standby Timer (AV28).

System Mode and Cooling/Heating Changeover (FCU)

The heating/cooling mode can also be manually set by adjusting the System Mode through the user interface. The System Mode (MSV2) can be set to Off, Auto, Heat, or Cool. Setting the System Mode to Heat or Cool forces the unit into that mode. Setting the System Mode to Off turns off all heating and cooling functions but has no effect on fan control.

When set to Auto:

- If the space temperature rises above the active cooling setpoint, the mode is set to cooling.
- If the space temperature falls below the heating setpoint, the mode is set to heating.
- The changeover is immediate.

Scheduling Occupancy (FCU)

The schedule in the controller is a standard BACnet schedule object. It can be changed from a configuration tool or a BACnet operator workstation.

The internal occupancy schedule changes the controller between the Occupied (Active) and Unoccupied (Inactive) states. If the controller is connected to an STE-92x1/95x1 NetSensor with a motion sensor, the motion sensor may change the controller between occupied and standby based on motion detected in the space.

NOTE: See also **Occupancy, Motion Sensing, and Standby (FCU) on page 49**.

Dehumidification Sequence (FCU)

NOTE: See also the four-pipe section in **Illustration: FCU Operations on page 47**.

Optional dehumidification control is available only for four-pipe applications when a controller is connected to an STE-9x21 NetSensor with an internal humidity sensor. (It is not available in two-pipe applications.) The controller can run the dehumidification sequence only if the heating and cooling modes are set to automatic.

If the space humidity rises above the dehumidification setpoint, the cooling valve is opened 100%. The heating valve then follows its normal operation to maintain the cooling setpoint. Once the space humidity drops below the dehumidification setpoint minus its span, dehumidification ceases and the heating and cooling valves resume normal operation.

Temperature Sensing Inputs (FCU)

Space Temperature Sensing

The controller uses a connected STE-9000 series NetSensor digital wall sensor or an STE-6010/6014/6017 analog wall sensor. See **Digital STE-9000 Series NetSensors on page 10** and **Analog STE-6000 Series Thermistor Sensors on page 12**.

WST (Water Supply Temperature) Sensor

The WST sensor is a required sensor (e.g., STE-1455) for two-pipe fan coil units and is optional for other fan coil applications. The controller is configured for a Type III thermistor sensor to monitor water temperature. The water temperature can be monitored as an analog input, and it is also stored as an analog value object (AV19).

DAT (Discharge Air Temperature) Sensor

The DAT input is a required input for economizer applications and is an option for other applications. For DAT applications, the controller is configured for a Type III thermistor sensor (e.g., STE-1405). DAT can be monitored as an analog input (AI3), and it is also stored as an analog value object (AV20).

Fan Status (FCU)

The function requires an NC (Normally Closed) fan status switch (e.g., CSE-1102) connected across the fan input terminals (UI**7** and GND for 2-pipe FCU; UI**6** and GND for 4-pipe FCU). When the fan is started at any speed, the controller program waits 10 seconds for the Fan Status switch (FST) to open. The fan output remains enabled until the fan status switch opens. The state of fan status is stored in a binary variable (BV14).

PID (Proportional Integral Derivative) Loops (FCU)

A PID control loop calculates an error value from the difference between the measured room temperature and the active setpoint values. The error value is expressed as a percentage and is typically used in a controller to control the state of an output. When the difference between the setpoint and room temperature is large, the error is large. As the system reduces the difference between the setpoint and space temperature, the error becomes smaller. In a simple example, if the output of the PID loop that is controlling a modulating valve is 50%, the valve position is half-way open; if the output of the loop is 100%, the valve position is fully open.

The controller uses up to three PID control loops:

- The **heating** loop and **cooling** loop are implemented in all models.
- The **reheat** loop is used only for heating outputs during dehumidification.

The PID control loops in the controller are standard BACnet objects.

Valve Operation (FCU)

Four-Pipe vs. Two Pipe

Four-pipe applications have both hot and chilled water valves for heating and cooling and an option for dehumidification. Two-pipe applications have one valve, a method to determine supply water temperature, and an option for electric reheat.

On/Off Valves

On a call for cooling or heating, the valve will open once the PID loop controlling the valve reaches 50% (half the span away from setpoint). The valve will close once the loop falls to 5%. The controller programming supports both normal and reverse action valves, which are set from the user interface.

Modulating Valves

On a call for cooling or heating, a modulating valve modulates from 0 to 100% over the first half (0 to 50%) of the PID loop output controlling the valve. When the temperature drops below 50% of the span, the valve starts modulating closed.

Valve Action

The controller supports both normal and reverse valve action that is set from the user interface.

- **Normal**—The valve is fully closed when the output signal is inactive and fully open when the output is active.
- **Reverse**—The valve is fully closed when the output signal is active and fully open when the output is inactive.

Two-Pipe Water Supply Temperature Evaluation

For two-pipe fan coil units, the controller uses the WST sensor to determine if chilled or hot water is being supplied to the unit. See **WST (Water Supply Temperature) Sensor on page 51**.The water type is determined by comparing the value of the water temperature sensor input to the room temperature. The controller programming then determines that the water temperature is one of the following.

- **Hot**—the water temperature is 10° F (default) or more above room temperature.
- **Chilled**—the water temperature is over 10° F (default) or more below room temperature.
- **None**—the water temperature is within that range.

NOTE: The default of 10° F can be changed in the STE-9xx1 menu by modifying the value in EVAL. See **Conquest NetSensor Screen Abbreviations on page 28**.

If the water temperature is evaluated as None, the controller runs the water evaluation program every six hours. During a water evaluation, the controller opens the valve until a water type is determined or for five minutes, whichever is reached first. If a water evaluation is not being performed, the valve remains closed.

Electric Heating (Two-Pipe Option)

Electric heat can be added to two-pipe systems, typically through a duct or baseboard resistance heater controlled by a relay.

When the supply water type is chilled water and there is a call for heat, the controller controls the heating element through output terminal BO5. The output turns on when the heating loop is greater than 99%. The output is turned off when the loop falls to 5%. If the supply water type is hot water, only the water valve output is used to satisfy a call for heat.

Fan Operation (FCU)

Automatic Fan Control

The controller supports both modulating fans and fans with one, two, or three speeds. Fan speed is determined by the PID loop currently controlling the heating or cooling. Fan speed control is set up from the user interface by a user with a level 2 password (if a level 2 password is configured).

A user with a level 1 password (if a level 1 password is configured) can set the controller controlled fan to either run continuously or to start automatically on a call for cooling or heating.

- **On**—The fan runs continuously regardless of the heating/cooling modes or occupied/standby states.
- **Auto**—The fan begins running only when there is a call for cooling or heating. After the call for cooling or heating ends, the fan continues to run for the period set by the fan delay timer.
- **Low, Medium, High**—For systems with three-speed fans, the user has the choice of low, medium or high speed as the continuous running speed for the fan. Two-speed fans have two choices.

One, Two, and Three Speed Fans

For one, two, and three speed fans, the controller controls the fan speed with terminals BO1 (Low), BO2 (Medium), and BO3 (High) and SC.

- Single speed fans use terminal BO1 only
- Two speed fans use terminals BO1 and BO3
- Thee speed fans use terminals BO1, BO2, and BO3

The fan output terminals are energized as the cooling or heating loop varies from 0–100%. When the fan mode is set to Auto and either valve is called for, the fan starts on low speed. As the space temperature deviates further from the setpoint, the fan speed changes to medium. As the space temperature passes the active setpoint (plus/minus its span), high fan speed becomes the active speed. As the space temperature begins to return to the setpoint, the active fan speed drops to medium. As the space temperature further returns to the setpoint, the fan speed switches to low. As the active valve closes, all fan speeds are deenergized. During the occupied and standby modes, low fan speed is energized while both valves are closed if the fan mode is set to On.

Fan terminal activation is shown in the following table.

FAN SPEED	L TERMINAL (BO1)		M TERMINAL (BO2)		H TERMINAL (BO3)	
	ON	OFF	ON	OFF	ON	OFF
One (Low)	Active valve	5%	N/A	N/A	N/A	N/A
Two (Medium)	Active valve	5%	N/A	N/A	95%	80%
Three (High)	Active valve	5%	65%	50%	95%	80%

Illustration: Fan Speed and Terminal States

Modulating Fans

When the fan mode is set to Auto and either valve opens, the fan (controlled by UO7) starts at the minimum fan speed. Once the active valve is fully open, as the space temperature deviates further from the setpoint, the fan speed increases until it reaches the maximum fan speed. As the space temperature begins to return to the setpoint, the fan speed modulates toward the minimum fan speed. The fan runs at the minimum speed until the space temperature further returns to setpoint and the active valve closes. During the occupied and standby modes, the fan is energized at the minimum fan speed while both valves are closed if the fan mode is set to On.

HPU (Heat Pump Unit)

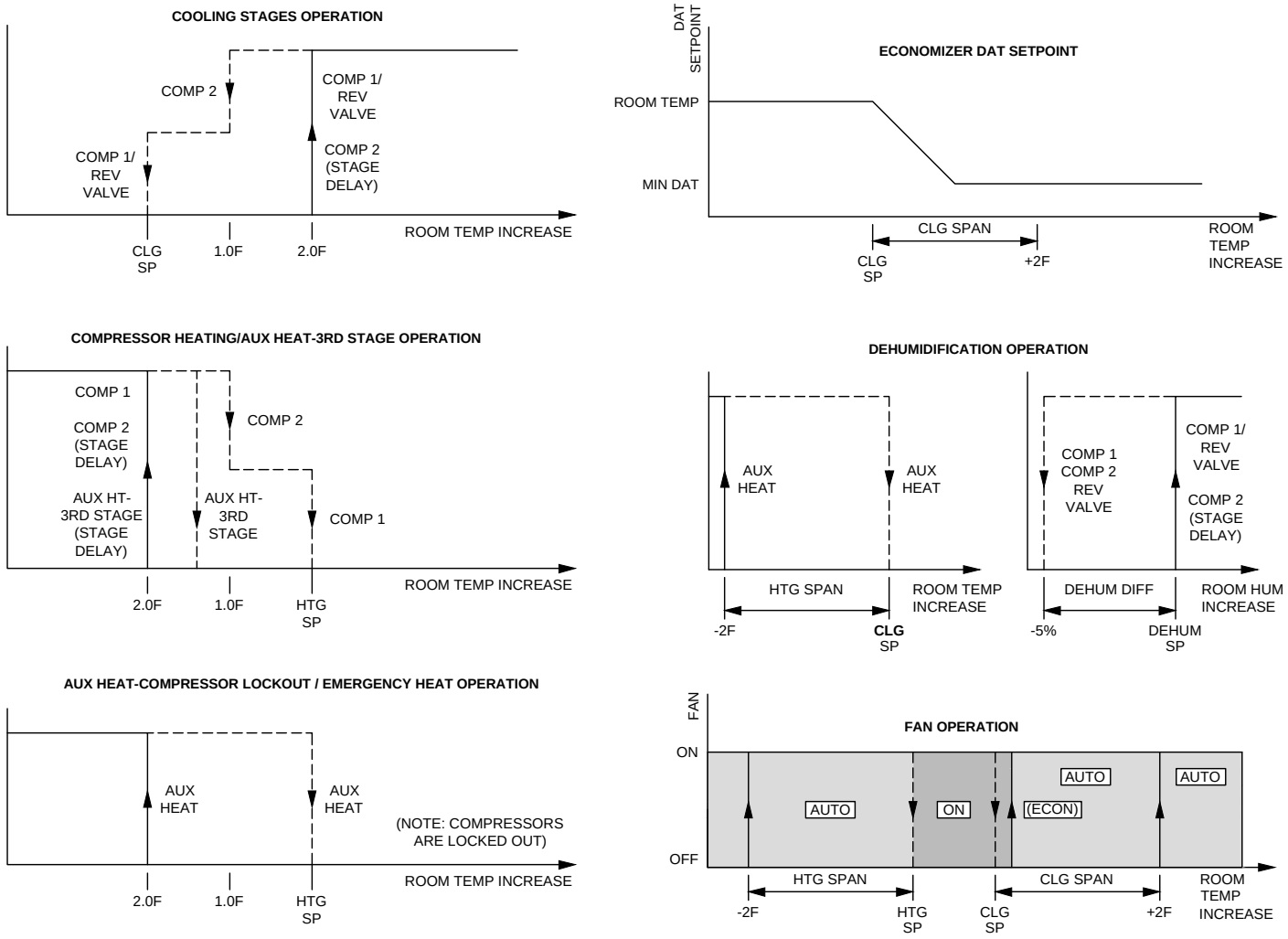

Illustration: HPU Operations

Introduction (HPU)

Topics in this section cover the sequences of operation for the HPU applications in the KMC Conquest BAC-9301 unitary controller. These are advanced topics for controls technicians and engineers.

NOTE: For sequence of operations with charts and wiring diagrams, see also the HPU submittal sheet. See **Submittal Sheets (Diagrams and Operation) on page 5**.

NOTE: See also **BACnet Objects List on page 81** for more information about objects listed in the descriptions.

NOTE: For information about the **CO_2 sensor and DCV (Demand Control Ventilation)** operation, see **STE-93xx/95xx CO2 Sensor and DCV on page 11**.

Room Temperature Setpoints (HPU)

Types of Setpoints

There are four temperature setpoints each for heating and cooling for a total of eight setpoints:

- Active cooling
- Occupied cooling
- Unoccupied cooling
- Standby cooling
- Active heating
- Occupied heating
- Unoccupied heating
- Standby heating

These setpoints are based on a user-entered value or the occupancy state and standby value described in **Occupancy, Motion Sensing, and Standby (HPU) on page 57**.

Active Setpoint

The active setpoint is the current setpoint being used for control. The active setpoint is determined according to the occupancy state (see **Occupancy, Motion Sensing, and Standby (HPU) on page 57**):

- When the space becomes **Occupied**, the Occupied Cooling Setpoint (AV5) is placed in the Active Cooling Setpoint (AV3), and the Occupied Heating Setpoint (AV6) is placed in the Active Heating Setpoint (AV4).
- When the space becomes **Unoccupied**, the Unoccupied Cooling Setpoint (AV7) is placed in the Active Cooling Setpoint (AV3), and the Unoccupied Heating Setpoint (AV8) is placed in the Active Heating Setpoint (AV4).
- When the space enters **Standby**, the controller calculates the active setpoint by adding or subtracting (depending on mode) the Standby Offset (AV12) from the relevant occupied (but not unoccupied) setpoint. Standby is only applied to the occupied setpoint and thus is only valid when the schedule is active.

AA user with a level 1 password (if a level 1 password is configured) can enter an active setpoint from the KMC Conquest STE-9000 series NetSensor (via AV3 and AV4). The local override is valid only when the schedule is inactive. This change is for a limited time or until the next time the occupancy state changes.

For display and control loop calculations, the active setpoint value is compared to the value of the space temperature variable AV1, which is taken from the physical temperature input AI1.

Occupied Setpoint

This temperature setpoint is entered by the controls technician during controller setup and system commissioning. This is the setpoint used when the system is occupied, which is usually controlled by the schedule in the controller.

Unoccupied Setpoint

This temperature setpoint is entered by the controls technician during controller setup and system commissioning. This is the setpoint used when the system is unoccupied, which is usually controlled by the schedule in the controller.

Standby Setpoint

This setpoint is used when the controller is in the standby state. It is calculated from the relevant occupied setpoint value and the Standby Offset value. The Standby Offset value is entered by the controls technician during controller setup and system commissioning. See **Occupancy, Motion Sensing, and Standby (HPU) on page 57**.

Setpoint Limits

Programming in the controller limits the setpoint entry so that a heating setpoint is not set higher than its corresponding cooling setpoint.

If a user adjusts a setpoint so that it falls within the range set by the value of Minimum Setpoint Differential, the corresponding setpoint is changed to maintain the differential. For example, the Minimum Setpoint Differential is 4° F and the Occupied Heating setpoint is 70° F. If the user lowers the Occupied Cooling setpoint to 71° F, the controller recalculates the Occupied Heating setpoint and changes it to 67° F.

Occupancy, Motion Sensing, and Standby (HPU)

The controller is designed to operate as a stand-alone controller and can determine occupancy based on its internal occupancy schedule and (if connected to an STE-92x1/95x1 NetSensor) motion in the space. The controller can be in any one of the following occupancy states:

- Occupied
- Unoccupied
- Standby

The controller chooses which setpoint to use based on the occupancy and standby states. See **Room Temperature Setpoints (HPU) on page 56**.

The occupancy and standby states can also be commanded by another BACnet device or an operator workstation connected to the building automation network.

Occupied

For controllers without a connected motion sensor, the controller starts in the occupied state. If an internal schedule is enabled, the state of the schedule is set to either occupied or unoccupied as the initial state. See **Scheduling Occupancy (HPU) on page 58**.

Unoccupied

The controller changes to the unoccupied state only if the internal occupancy schedule is enabled and if the schedule is inactive.

Standby

In units with a connected motion sensor, the controller starts in standby and changes to occupied after detecting motion in the space. The controller will change from occupied to standby after a lack of motion for the period specified by the variable Standby Timer (AV28).

System Mode and Cooling/Heating Changeover (HPU)

The heating/cooling mode can also be manually set by adjusting the System Mode through the user interface. The System Mode (MSV2) can be set to Off, Auto, Heat, Cool, or Emergency Heat. Setting the System Mode to Heat, Cool, or Emergency Heat forces the unit into that mode. Setting the System Mode to Off turns off all heating and cooling functions but has no effect on fan control.

When set to Auto:

- If the space temperature rises above the active cooling setpoint, the mode is set to cooling.
- If the space temperature falls below the heating setpoint, the mode is set to heating.
- The changeover does not take place until the time set by Fan Off Delay expires.

Scheduling Occupancy (HPU)

The schedule in the controller is a standard BACnet schedule object. It can be changed from a configuration tool or a BACnet operator workstation.

The internal occupancy schedule changes the controller between the Occupied (Active) and Unoccupied (Inactive) states. If the controller is connected to an STE-92x1/95x1 NetSensor with a motion sensor, the motion sensor may change the controller between occupied and standby based on detected motion.

NOTE: See also **Occupancy, Motion Sensing, and Standby (HPU) on page 57**.

Dehumidification Sequence (HPU)

NOTE: See **Illustration: HPU Operations on page 55**.

Optional dehumidification control is available only when a controller is connected to an STE-9x21 NetSensor with an internal humidity sensor.

The controller can run the dehumidification sequence only if the heating and cooling modes are set to automatic.

When dehumidification is active, cooling output is set to 100%. Heating then reheats the discharge air to maintain the space temperature to the value of the Active Cooling setpoint. The controller continuously runs the fan during dehumidification regardless of other fan settings.

If the space humidity rises above the dehumidification setpoint, compressor 1 is energized if the minimum off time has been met. If the humidity remains high for the stage delay and compressor 2's minimum off time has been met, compressor 2 is energized. Auxiliary heat is then cycled to maintain the cooling setpoint. Once the space humidity drops below the dehumidification setpoint minus its span, dehumidification ceases and the compressors resume normal space temperature control.

Temperature Sensing Inputs (HPU)

Space Temperature Sensing

The controller uses a connected STE-9000 series NetSensor digital wall sensor or an STE-6010/6014/6017 analog wall sensor. See **Digital STE-9000 Series NetSensors on page 10** and **Analog STE-6000 Series Thermistor Sensors on page 12**.

OAT (Outside Air Temperature) Sensing

The OAT input is a required input for compressor lockout and economizer applications and is an optional input for others. The controller is configured for a Type III thermistor sensor (e.g., STE-1451) to monitor outside air temperature. The outside air temperature is also stored in an analog value object (AV19).

DAT (Discharge Air Temperature) Sensor

The DAT input is a required input for economizer applications and is an option for other applications. For DAT applications, the controller is configured for a Type III thermistor sensor (e.g., STE-1405). The DAT can be monitored as an analog input (AI3) and is also stored in an analog value object (AV20).

Fan Status (HPU)

NOTE: See **Illustration: HPU Operations on page 55**.

The function requires an NC (Normally Closed) fan status switch (e.g., CSE-1102) connected across the fan input terminals (UI6 and GND). When the fan is started at any speed, the controller program waits 10 seconds for the Fan Status switch (FST) to open. If the status switch does not open within 10 seconds after the fan is commanded to start, all heating and cooling is commanded to stop at BACnet priority level 5. The fan output remains enabled until the fan status switch opens. The state of fan status is stored in a binary variable (BV14).

PID (Proportional Integral Derivative) Loops (HPU)

A PID control loop calculates an error value from the difference between the measured room temperature and the active setpoint. The error value is expressed as a percentage and is typically used in a controller to control the state of an output. When the difference between the setpoint and room temperature is large, the error is large. As the system reduces the difference between the setpoint and space temperature, the error becomes smaller. In a simple example, if the output of the PID loop that is controlling a modulating valve is 50%, the valve position is half-way open; if the output of the loop is 100%, the valve position is fully open.

The controller uses up to four PID control loops:

- The **heating** loop and **cooling** loop are implemented in all models.
- The **discharge air** loop controls the position of the economizer damper. For this loop, the setpoint is the measured temperature of the air that is discharged by a heat pump unit. See **Economizer Cooling (HPU) and DCV on page 61**.
- The **reheat** loop is used only for heating outputs during dehumidification. See also **Auxiliary and Emergency Heat Action (HPU) on page 62**.

The PID control loops in the controller are standard BACnet objects.

Staged Heating And Cooling (HPU)

Staged heating and cooling are used for applications other than chilled or hot water systems. Typically the controller controls gas heat, electric heat, or direct expansion (DX) cooling with staged heating and cooling. Staged heating or cooling can be mixed with a modulating valve for heating or cooling.

NOTE: See **Illustration: HPU Operations on page 55**.

Staged Cooling

As the demand for cooling increases, the controller starts the first stage of cooling when the cooling PID loop rises above 99% and the first stage of cooling has been turned off for at least the time set by the value of Minimum Off Time. See **PID (Proportional Integral Derivative) Loops (HPU) on page 59**.

The second stage of cooling turns on when:

- The cooling loop rises above 99%.
- And the first stage has been turned on for the period set by Stage Delay.
- And the second stage has been turned off for at least as long as the value of Minimum Off Time.

As the demand for cooling is satisfied, the second stage turns off when the cooling PID loop drops below 50%. This first stage turns off when the cooling loop drops below 1%.

Staged Heating

As the demand for heating increases, the controller starts the first stage of heating when the heating PID loop rises above 99%. The second stage of heating turns on when the heating loop rises above 99% and the first stage has already been on for the period set by the Stage Delay.

As the demand for heating is satisfied, the second stage is turned off when the heating PID loop drops below 50%. This first stage is turned off when the heating loop drops below 1%.

See also **Auxiliary and Emergency Heat Action (HPU) on page 62**.

Fan Operation (HPU)

A user with a level 1 password (if a level 1 password is configured) can set the controller controlled fan to either run continuously or to start automatically on a call for cooling or heating.

- **On**—The fan runs continuously regardless of the heating/cooling modes or occupied/standby states.
- **Auto**—The fan begins running only when there is a call for cooling or heating. After the call for cooling or heating ends, the fan continues to run for the period set by the fan delay timer.

Economizer Cooling (HPU) and DCV

NOTE: See **Illustration: HPU Operations on page 55**.

NOTE: During Occupied mode, the optional economizer can be enabled only if both OAT and DAT sensors are connected to the controller. See **OAT (Outside Air Temperature) Sensing on page 59** and **DAT (Discharge Air Temperature) Sensor on page 59**.

During occupied mode, if the OAT drops below the economizer enable temperature and there is a call for cooling, the economizer mode is enabled. The economizer mode is disabled if the OAT rises 1° above the economizer enable temperature.

Once enabled, the economizer OAD (Outside Air Damper) opens to the larger value of either the minimum damper position limit (Minimum Econ Damper) or the DAT PID loop. The DAT loop modulates from 0 to 100% as the DAT rises above the DAT setpoint. The DAT setpoint resets between the sensed room temperature and the limit for minimum discharge air temperature as the cooling loop varies between 0 and 50%. If the DAT decreases below 55° F, the OAD returns to the minimum damper position.

While economizing, the OAD is open to the greater of the minimum damper position or DAT control. The OAD is shut during unoccupied mode and any time the fan is off.

NOTE: For information about the **CO_2 sensor and DCV (Demand Control Ventilation)** operation, see **STE-93xx/95xx CO2 Sensor and DCV on page 11**.

Reversing Valve Action (HPU)

The controller reversing valve output BO4 to HPU terminal O/B, is energized on a call for cooling (“O” function). The action can be changed from the user interface to be active on a call for heating (“B” function). The “O” function is the default.

HPU REVERSING VALVE CONNECTIONS AND CONFIGURATION				
BAC-9301 Terminal	**HPU Terminal**	**RVA on NetSensor Display***	**BV15 Object State**	**Reversing Valve Action***
BO4	O	ACTV CL or Disable**	Inactive	Energized for Cooling
	B	ACTV HT or Enable**	Active	Energized for Heating

*NOTE: The RVA (Reversing Valve) configuration is in the SYS menu of the STE-9xxx NetSensor. See **Controller Configuration with STE-9xx1 Menus on page 27**.

**NOTE: Displayed text is dependent on firmware version. Only initial firmware had Disable/Enable.

Illustration: HPU Reversing Valve Connections and Configuration

Auxiliary and Emergency Heat Action (HPU)

NOTE: See **Illustration: HPU Operations on page 55**.

The heat pump unit AUX/E terminal is for auxiliary or emergency heat.

Auxiliary heat operation can be configured for one of three modes:

- **Compressor lockout**—The compressors are locked out when the outside air temperature drops below the value of the Compressor OAT Low Limit, and the auxiliary heat output follows the compressor 1 heating sequence. The lockout is cleared when the outside air temperature rises 2° F above the value of Compressor OAT Low Limit. The BO5 (AUX/E) output terminal is active only on a call for heating when the compressors are locked out.
- **Third stage**—The BO5 (AUX/E) output functions as the output for a third stage of heat. When auxiliary heat is configured for third stage, the unit is in heating mode and compressor 2 has been on for the stage delay, the aux heat output is energized. As the space temperature rises above 65% of the heating span below heating setpoint, aux heat is deenergized.
- **None**—Auxiliary heat is disabled.

When the system mode is manually set to **Emergency** heat, the compressor heating outputs (BO2 and BO3) are locked out and emergency heat (BO5) is energized as the space temperature drops below the heating setpoint minus heating span. As the space temperature rises above the heating setpoint, the emergency heat output is deenergized.

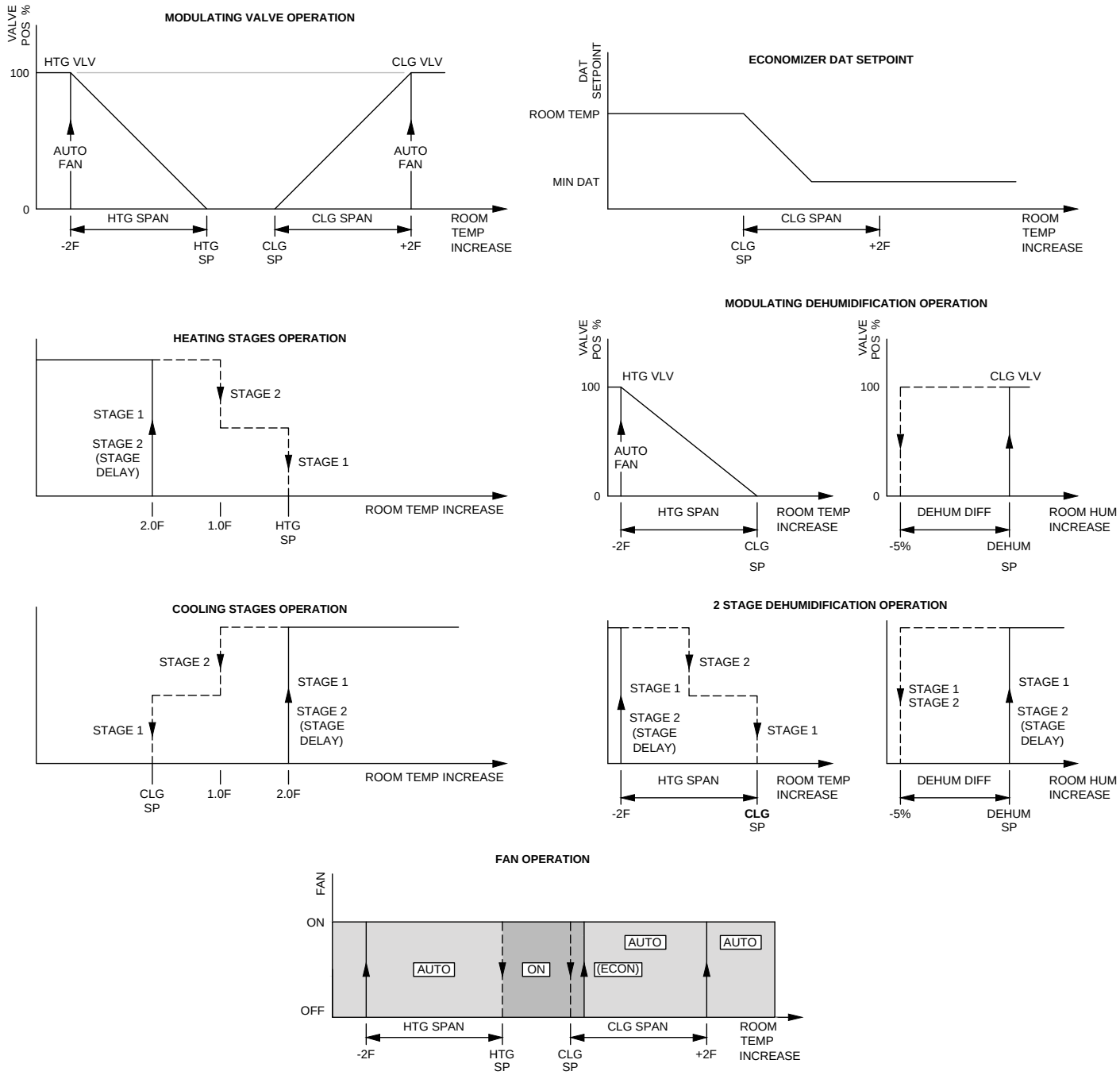

Illustration: RTU Operations

Introduction (RTU/AHU)

Topics in this section cover the RTU sequences of operation for the KMC Conquest BAC-9301 unitary controller. These are advanced topics for controls technicians and engineers.

NOTE: For sequence of operations with charts and wiring diagrams, see also the RTU submittal sheets (see **Submittal Sheets (Diagrams and Operation) on page 5**).

NOTE: See also **BACnet Objects List on page 81** for more information about objects listed in the descriptions.

NOTE: For information about the **CO_2 sensor and DCV (Demand Control Ventilation)** operation, see **STE-93xx/95xx CO2 Sensor and DCV on page 11**.

Room Temperature Setpoints (RTU/AHU)

Types of Setpoints

There are four temperature setpoints each for heating and cooling for a total of eight setpoints.

- Active cooling
- Occupied cooling
- Unoccupied cooling
- Standby cooling
- Active heating
- Occupied heating
- Unoccupied heating
- Standby heating

These setpoints are based on a user-entered value or the occupancy state and standby that is described in **Occupancy, Motion Sensing, and Standby (RTU/AHU) on page 65**.

Active Setpoint

The active setpoint is the current setpoint being used for control. The active setpoint is determined according to the occupancy state (see **Occupancy, Motion Sensing, and Standby (RTU/AHU) on page 65**):

- When the space becomes **Occupied**, the Occupied Cooling Setpoint (AV5) is placed in the Active Cooling Setpoint (AV3), and the Occupied Heating Setpoint (AV6) is placed in the Active Heating Setpoint (AV4).
- When the space becomes **Unoccupied**, the Unoccupied Cooling Setpoint (AV7) is placed in the Active Cooling Setpoint (AV3), and the Unoccupied Heating Setpoint (AV8) is placed in the Active Heating Setpoint (AV4).
- When the space enters **Standby**, the controller calculates the active setpoint by adding or subtracting (depending on mode) the Standby Offset (AV12) from the relevant occupied (but not unoccupied) setpoint. Standby is only applied to the occupied setpoint and thus is only valid when the schedule is active.

A user with a level 1 password (if a level 1 password is configured) can enter an active setpoint from the KMC Conquest STE-9000 series NetSensor (via AV3 and AV4). The local override is valid only when the schedule is inactive. This change is for a limited time or until the next time the occupancy state changes.

For display and control loop calculations, the active setpoint value is compared to the value of the space temperature variable AV1, which is taken from the physical temperature input AI1.

Occupied Setpoint

This temperature setpoint is entered by the controls technician during controller setup and system commissioning. This is the setpoint used when the system is occupied, which is usually controlled by the schedule in the controller.

Unoccupied Setpoint

This temperature setpoint is entered by the controls technician during controller setup and system commissioning. This is the setpoint used when the system is unoccupied, which is usually controlled by the schedule in the controller.

Standby Setpoint

The standby setpoint is used when the controller is in the standby state. It is calculated from the occupied setpoint and the value of Standby Offset. The Standby Offset value is entered by the controls technician during controller setup and system commissioning. See **Occupancy, Motion Sensing, and Standby (RTU/AHU) on page 65**.

Setpoint Limits

Programming in the controller limits the setpoint entry so that a heating setpoint is not set higher than its corresponding cooling setpoint.

If a user adjusts a setpoint so that it falls within the range set by the value of Minimum Setpoint Differential, the corresponding setpoint is changed to maintain the differential. For example, the Minimum Setpoint Differential is 4° F and the Occupied Heating setpoint is 70° F. If the user lowers the Occupied Cooling setpoint to 71° F, the controller recalculates the Occupied Heating setpoint and changes it to 67° F.

Occupancy, Motion Sensing, and Standby (RTU/AHU)

The controller is designed to operate as a stand-alone controller and can determine occupancy based on its internal occupancy schedule and (if connected to an STE-92x1/95x1 NetSensor) motion in the space. The controller can be in any one of the following occupancy states:

- Occupied
- Unoccupied
- Standby

The controller chooses which setpoint to use based on the occupancy and standby states. See **Room Temperature Setpoints (RTU/AHU) on page 64**.

The occupancy and standby states can also be commanded by another BACnet device or an operator workstation connected to the building automation network.

Occupied

For controllers without a connected motion sensor, the controller starts in the occupied state. If an internal schedule is enabled, the state of the schedule is set to either occupied or unoccupied as the initial state. See **Scheduling Occupancy (RTU/AHU) on page 66**.

Unoccupied

The controller changes to the unoccupied state only if the internal occupancy schedule is enabled and if the schedule is inactive.

Standby

In units with a connected motion sensor, the controller starts in standby and changes to occupied after detecting motion in the space. The controller will

change from occupied to standby after a lack of motion for the period specified by the variable Standby Timer (AV28).

System Mode & Cooling/Heating Changeover (RTU/AHU)

The heating/cooling mode can also be manually set by adjusting the System Mode through the user interface. The System Mode (MSV2) can be set to Off, Auto, Heat, or Cool. Setting the System Mode to Heat or Cool forces the unit into that mode. Setting the System Mode to Off turns off all heating and cooling functions but has no effect on fan control.

When set to Auto:

- If the space temperature rises above the active cooling setpoint, the mode is set to cooling.
- If the space temperature falls below the heating setpoint, the mode is set to heating.
- The changeover does not take place until the time set by Fan Off Delay expires.

Scheduling Occupancy (RTU/AHU)

The schedule in the controller is a standard BACnet schedule object. It can be changed from a configuration tool or a BACnet operator workstation.

The internal occupancy schedule changes the controller between the Occupied (Active) and Unoccupied (Inactive) states. If the controller is connected to an STE-92x1/95x1 NetSensor with a motion sensor, the motion sensor may change the controller between occupied and standby based on motion detected in the space.

NOTE: See also **Occupancy, Motion Sensing, and Standby (RTU/AHU) on page 65**.

Dehumidification Sequence (RTU/AHU)

NOTE: See **Illustration: RTU Operations on page 63**.

Optional dehumidification control is available only when a controller is connected to an STE-9x21 NetSensor with an internal humidity sensor.

The controller can run the dehumidification sequence only if the heating and cooling modes are set to automatic.

When dehumidification is active, cooling output is activated to 100%. Heating then reheats the discharge air to maintain the space temperature to the value of the Active Cooling setpoint. The controller continuously runs the fan during dehumidification regardless of other fan settings.

Temperature Sensing Inputs (RTU/AHU)

Space Temperature Sensing

The controller uses a connected STE-9000 series NetSensor digital wall sensor or an STE-6010/6014/6017 analog wall sensor. See **Digital STE-9000 Series NetSensors on page 10** and **Analog STE-6000 Series Thermistor Sensors on page 12**.

OAT (Outside Air Temperature) Sensing

The OAT input is a required input for compressor lockout and economizer applications and is an optional input for others. The controller is configured for a Type III thermistor sensor (e.g., STE-1451) to monitor outside air temperature. The outside air temperature is also stored in an analog value object (AV19).

DAT (Discharge Air Temperature) Sensor

The DAT input is a required input for economizer applications and is an option for other applications. For DAT applications, the controller is configured for a Type III thermistor sensor (e.g., STE-1405). The DAT can be monitored as an analog input (AI3) and is also stored in an analog value object (AV20).

Fan Status (RTU/AHU)

NOTE: See **Illustration: RTU Operations on page 63**.

The function requires an NC (Normally Closed) fan status switch (e.g., CSE-1102) connected across the fan input terminals (UI6 and GND). When the fan is started at any speed, the controller program waits 10 seconds for the Fan Status switch (FST) to open. If the status switch does not open within 10 seconds after the fan is commanded to start, all heating and cooling is commanded to stop at BACnet priority level 5. The fan output remains enabled until the fan status switch opens. The state of fan status is stored in a binary variable (BV14).

PID (Proportional Integral Derivative) Loops (RTU/AHU)

A PID control loop calculates an error value from the difference between the measured room temperature and the active setpoint. The error value is expressed as a percentage and is typically used in a controller to control the state of an output. When the difference between the setpoint and room temperature is large, the error is large. As the system reduces the difference between the setpoint and space temperature, the error becomes smaller. In a simple example, if the output of the PID loop that is controlling a modulating valve is 50%, the valve position is half-way open; if the output of the loop is 100%, the valve position is fully open.

The controller uses up to four PID control loops:

- The **heating** loop and **cooling** loop are implemented in all models.
- The **discharge air** loop controls the position of the economizer damper. For this loop, the setpoint is the measured temperature of the air that is discharged by the RTU. See **Economizer Cooling (RTU/AHU) and DCV (RTU) on page 69**.
- The **reheat** loop is used only for heating outputs during dehumidification.

The PID control loops in the controller are standard BACnet objects.

Modulating Cooling and Heating (RTU/AHU)

Modulating cooling and heating are used in controller controlled systems with modulating valves and chilled or hot water coils. A single modulating valve can be used with staged cooling or heating.

Modulating Cooling

Modulating cooling does not start until the cooling loop exceeds 99%. Then the analog cooling output modulates over 10 VDC as the cooling loop changes from

0 to 100%. When the cooling loop drops below 1%, cooling stops until the loop again exceeds 99%.

If the economizer is enabled, cooling will not start modulating until the economizer damper is fully open.

Modulating Heating

Modulating heating does not start until the heating loop exceeds 99%. Then the analog heating output modulates over 10 VDC as the heating loop changes from 0 to 100%. When the heating loop drops below 1%, heating stops until the loop exceeds 99% again.

Valve Action

The controller supports both normal and reverse valve action that can be set from the user interface.

- **Normal**—The valve is fully closed when the output signal is 0 VDC and fully open when the output is 10 VDC.
- **Reverse**—The valve is fully closed when the output signal is 10 VDC and fully open when the output is 0 VDC.

Staged Heating And Cooling (RTU/AHU)

Staged heating and cooling are used for applications other than chilled or hot water systems. Typically the controller controls gas heat, electric heat, or direct expansion (DX) cooling with staged heating and cooling. Staged heating or cooling can be mixed with a modulating valve for heating or cooling.

NOTE: See **Illustration: RTU Operations on page 63**.

Staged Cooling

As the demand for cooling increases, the controller starts the first stage of cooling when the cooling PID loop rises above 99% and the first stage of cooling has been turned off for at least the time set by the value of Minimum Off Time. See **PID (Proportional Integral Derivative) Loops (RTU/AHU) on page 67**.

The second stage of cooling turns on when:

- The cooling loop rises above 99%.
- And the first stage has been turned on for the period set by Stage Delay.
- And the second stage has been turned off for at least as long as the value of Minimum Off Time.

As the demand for cooling is satisfied, the second stage turns off when the cooling PID loop drops below 50%. This first stage turns off when the cooling loop drops below 1%.

Staged Heating

As the demand for heating increases, the controller starts the first stage of heating when the heating PID loop rises above 99%. The second stage of heating is turned on when the heating loop rises above 99% and the first stage has been turned on for period set by the Stage Delay.

As the demand for heating is satisfied, the second stage is turned off when the heating PID loop drops below 50%. This first stage is turned off when the heating loop drops below 1%.

Fan Control (RTU/AHU)

A user with a level 1 password (if a level 1 password is configured) can set the controller controlled fan to either run continuously or to start automatically on a call for cooling or heating.

- **On**—The fan will run continuously regardless of the heat/cool modes or occupied/standby states.
- **Auto**—The fan will run only when there is a call for heating or cooling. It continues to run for the period set by the fan delay timer after the call for heating or cooling.

Economizer Cooling (RTU/AHU) and DCV (RTU)

NOTE: See **Illustration: RTU Operations on page 63**.

NOTE: During Occupied mode, the optional economizer can be enabled only if both OAT and DAT sensors are connected to the controller. See **OAT (Outside Air Temperature) Sensing on page 67** and **DAT (Discharge Air Temperature) Sensor on page 67**.

During occupied mode, if the OAT drops below the economizer enable temperature and there is a call for cooling, the economizer mode is enabled. The economizer mode is disabled if the OAT rises 1° above the economizer enable temperature.

Once enabled, the economizer OAD (Outside Air Damper) opens to the larger value of either the minimum damper position limit (Minimum Econ Damper) or the DAT PID loop. The DAT loop modulates from 0 to 100% as the DAT rises above the DAT setpoint. The DAT setpoint resets between the sensed room temperature and the limit for minimum discharge air temperature as the cooling loop varies between 0 and 50%. If the DAT decreases below 55° F, the OAD returns to the minimum damper position.

While economizing, the OAD is open to the greater of the minimum damper position or DAT control. The OAD is shut during unoccupied mode and any time the fan is off.

NOTE: For information about the **CO_2 sensor and DCV (Demand Control Ventilation)** operation in RTU applications, see **STE-93xx/95xx CO2 Sensor and DCV on page 11**.

VAV (Variable Air Volume)

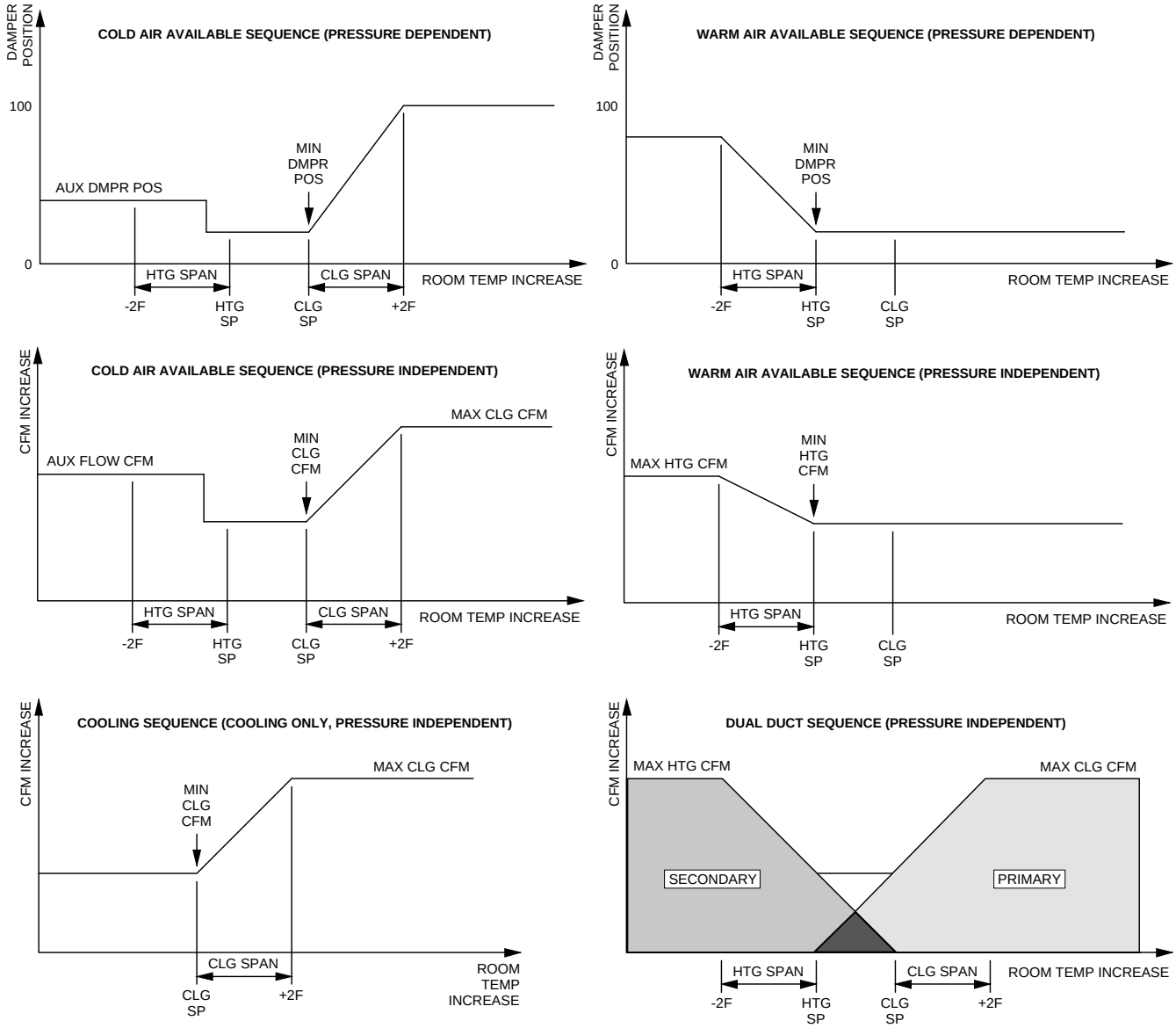

Illustration: VAV Airflow Operations

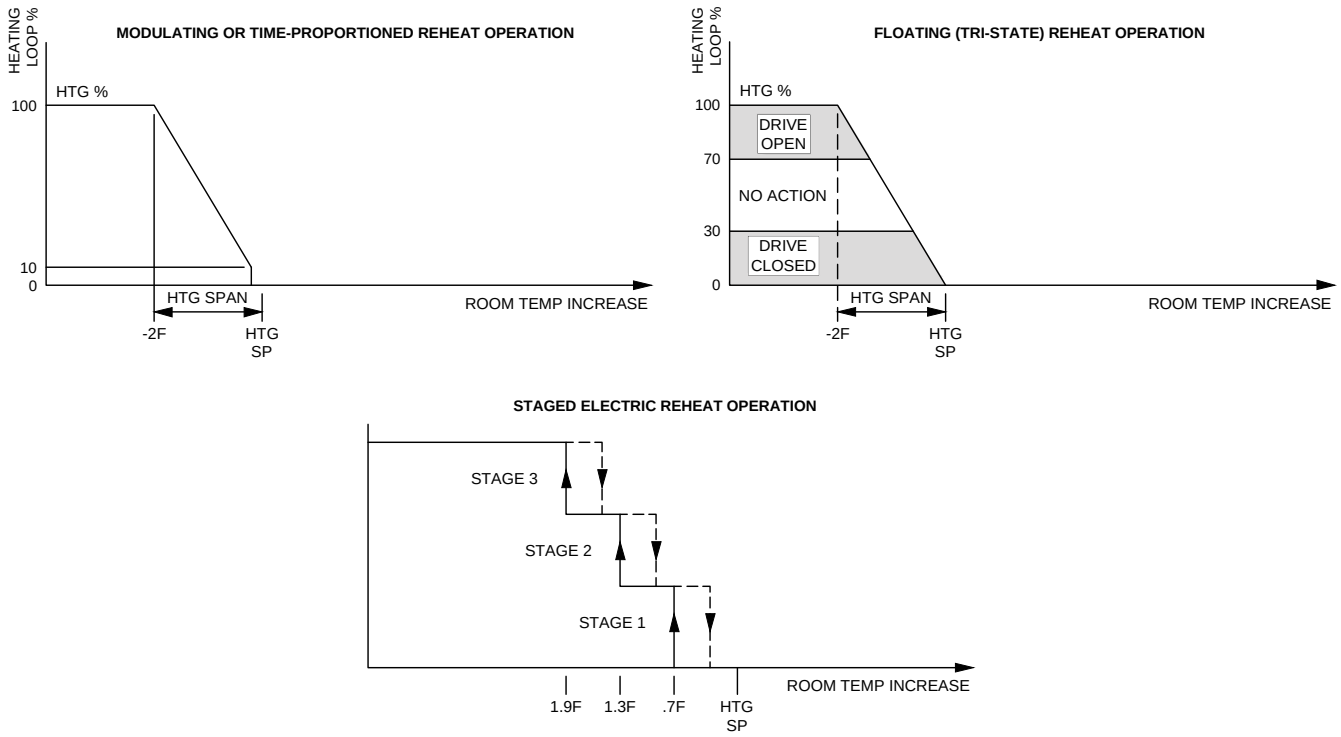

Illustration: VAV Reheat Operations

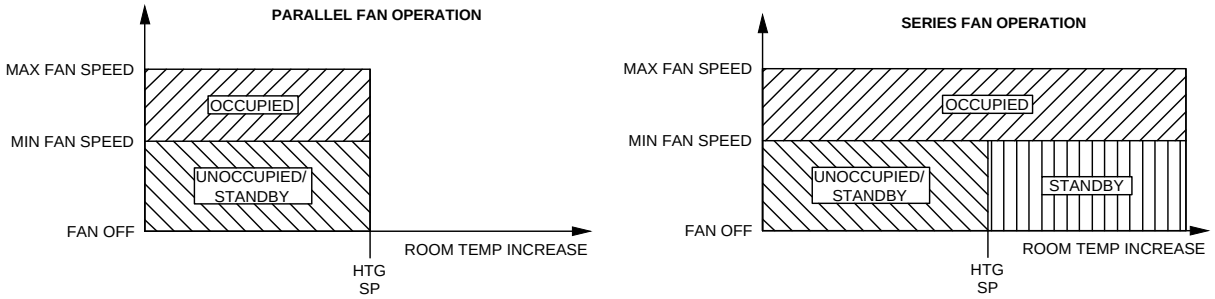

Illustration: VAV Fan Operations

Introduction (VAV)

Topics in this section cover the VAV (and CAV) sequences of operation for the KMC Conquest BAC-9000 series controller-actuators and (with use of an external actuator) the BAC-9311 unitary controller. These are advanced topics for controls technicians and engineers. Considerable differences in sequences and options exist for the various configurations of VAV (e.g., dual duct vs. single duct and type of reheat). See the sections relevant for the desired application.

NOTE: For CAV-specific diagrams, see **CAV (Constant Air Volume) on page 46**.

NOTE: For sequence of operations with charts and wiring diagrams, see also the VAV submittal sheets (see **Submittal Sheets (Diagrams and Operation) on page 5**).

NOTE: See also **BACnet Objects List on page 81** for more information about objects listed in the descriptions.

NOTE: Starting the balancing procedure clears the previously calculated balancing correction factors. See **Balancing Airflow (VAV) on page 79**.

NOTE: If Auto Occupancy is enabled (disabled by default) and the measured airflow is 75% or less of the requested airflow for at least five minutes during Occupied mode, the mode will change to Unoccupied. See **Occupancy, Motion Sensing, and Standby (VAV) on page 74**.

NOTE: Auxiliary Flow is the airflow setpoint used during reheat operation. If the measured airflow is 25% or less of the Auxiliary Flow setting, reheat is disabled.

NOTE: If the supply air is warmer than the changeover setpoint (74° default) plus 2° F, the controller modulates between minimum and maximum heating airflows and reheat is locked out. See **Cooling/Heating Changeover (VAV) on page 76**.

NOTE: To properly set up a VAV controller, the correct K factor for the VAV box must be entered into the controller. If this information is unknown, see **Appendix: K Factors for VAV on page 107**.

Sensors (VAV)

Space Temperature Sensor

The controller uses a connected STE-9000 series NetSensor digital wall sensor or an STE-6010/6014/6017 analog wall sensor. See **Digital STE-9000 Series NetSensors on page 10** and **Analog STE-6000 Series Thermistor Sensors on page 12**.

DAT (Discharge Air Temperature) Sensor

The DAT sensor is an optional Type III, 10K ohm thermistor (e.g., STE-1400 series) and is required for VAV heating applications. If the controller detects that this sensor is connected, the controller uses discharge air temperature to determine when to change between heating and cooling. The DAT sensor input is also used to control reheat. See **Reheat (VAV) on page 77** and **Cooling/Heating Changeover (VAV) on page 76**.

NOTE: DAT can be monitored as an analog input (AI3).

Airflow Sensors and Pickups

VAV airflow is calculated by measuring the high and low duct pressures with the built-in airflow sensor connected to airflow pickup tubes (e.g., SSS-101x). The high and low pressure measurements along with the K-factor of the VAV terminal unit are used to calculate the airflow through the VAV unit. (See **Appendix: K Factors for VAV on page 107**.)

Room Temperature Setpoints (VAV)

Types of Setpoints

There are four temperature setpoints each for heating and cooling for a total of eight setpoints.

- Active cooling
- Occupied cooling
- Unoccupied cooling
- Standby cooling
- Active heating
- Occupied heating
- Unoccupied heating
- Standby heating

These setpoints are based on a user-entered value or the occupancy state and standby value described in **Occupancy, Motion Sensing, and Standby (VAV) on page 74**.

Active Setpoint

The active setpoint is the current setpoint being used for control. The active setpoint is determined according to the occupancy state (see **Occupancy, Motion Sensing, and Standby (VAV) on page 74**):

- When the space becomes **Occupied**, the Occupied Cooling Setpoint (AV5) is placed in the Active Cooling Setpoint (AV3), and the Occupied Heating Setpoint (AV6) is placed in the Active Heating Setpoint (AV4).
- When the space becomes **Unoccupied**, the Unoccupied Cooling Setpoint (AV7) is placed in the Active Cooling Setpoint (AV3), and the Unoccupied Heating Setpoint (AV8) is placed in the Active Heating Setpoint (AV4).
- When the space enters **Standby**, the controller calculates the active setpoint by adding or subtracting (depending on mode) the Standby Offset (AV12) from the relevant occupied (but not unoccupied) setpoint. Standby is only applied to the occupied setpoint and thus is only valid when the schedule is active.

A user with a level 1 password (if a level 1 password is configured) can enter an active setpoint from the KMC Conquest STE-9000 series NetSensor (via AV3 and AV4). The local override is valid only when the schedule is inactive. This change is for a limited time or until the next time the occupancy state changes.

For display and control loop calculations, the active setpoint value is compared to the value of the space temperature variable AV1, which is taken from the physical temperature input AI1.

Occupied Setpoint

This temperature setpoint is entered by the controls technician during controller setup and system commissioning. This is the setpoint used when the system is occupied, which is usually controlled by the schedule in the controller.

Unoccupied Setpoint

This temperature setpoint is entered by the controls technician during controller setup and system commissioning. This is the setpoint used when the system is unoccupied, which is usually controlled by the schedule in the controller.

Standby Setpoint

This setpoint is used when the controller is in the standby state. It is calculated from the relevant occupied setpoint value and the Standby Offset value. The Standby Offset value is entered by the controls technician during controller setup and system commissioning. See **Occupancy, Motion Sensing, and Standby (VAV) on page 74**.

Setpoint Limits

Programming in the controller limits the setpoint entry so that a heating setpoint is not set higher than its corresponding cooling setpoint.

If a user adjusts a setpoint so that it falls within the range set by the value of Minimum Setpoint Differential, the corresponding setpoint is changed to maintain the differential. For example, the Minimum Setpoint Differential is 4° F and the Occupied Heating setpoint is 70° F. If the user lowers the Occupied Cooling setpoint to 71° F, the controller recalculates the Occupied Heating setpoint and changes it to 67° F.

Occupancy, Motion Sensing, and Standby (VAV)

Occupancy Options

The controller can operate as a stand-alone controller and can determine occupancy based on its internal occupancy schedule and (if connected to an STE-92x1/95x1 NetSensor) motion in the space. The controller can be in any one of the following occupancy states:

- Occupied
- Unoccupied
- Standby

The controller chooses which setpoint to use based on the occupancy and standby states. See **Room Temperature Setpoints (VAV) on page 73**.

The occupancy and standby states can also be commanded by another BACnet device or an operator workstation connected to the building automation network.

Automatic Occupancy

If Automatic Occupancy is enabled, the controller automatically toggles between Unoccupied, Occupied, and Standby based on the presence of primary airflow and motion in the zone. The default for Automatic Occupancy is Disabled.

Occupied

For controllers without a connected motion sensor, the controller changes to Occupied upon the detection of primary airflow.

Controllers **with** a connected motion sensor change to Occupied upon the detection of primary airflow **and** motion in the space. The unit remains in the Occupied state as long as periodic motion is detected and primary airflow continues. If motion stops, the controller changes to Standby.

If an internal schedule is enabled, the occupancy state is set according to the schedule. See **Scheduling Occupancy (VAV) on page 75**.

Unoccupied

Occupancy mode changes to Unoccupied when the controller detects a loss of primary airflow. While in the Unoccupied state, the controller will fully open the damper in an attempt to reach the maximum airflow setpoint.

Loss of primary airflow is defined as detection of less than 25% of the requested flow for at least 5 minutes. The occupancy mode changes to Occupied or Standby once the actual airflow is at least 30% of the requested flow.

The Occupied state changes to the Unoccupied state if the internal occupancy schedule is enabled and if the schedule for that time is inactive.

Standby

In units with a connected motion sensor, the controller starts in Standby and changes to Occupied after detecting motion in the space. Motion in the space is defined as two movements detected within 5 minutes. The controller will change back to Standby after a lack of motion for the period specified by the variable Standby Timer (AV39).

Standby mode is not available for controllers without a motion sensor, unless commanded by a building management system.

Scheduling Occupancy (VAV)

The schedule in the controller is a standard BACnet schedule object. It can be changed from a configuration tool or a BACnet operator workstation.

The internal occupancy schedule changes the controller between the Occupied (Active) and Unoccupied (Inactive) states. If the controller is connected to an STE-92x1/95x1 NetSensor with a motion sensor, the motion sensor may change the controller between occupied and standby based on motion detected in the space.

See also **Occupancy, Motion Sensing, and Standby (VAV) on page 74**.

PID (Proportional Integral Derivative) Loops (VAV)

A PID control loop calculates an error value from the difference between the measured room temperature and the active setpoint. The error value is expressed as a percentage and is typically used in a controller to control the state of an output. When the difference between the setpoint and room temperature is large, the error is large. As the system reduces the difference between the setpoint and space temperature, the error becomes smaller. In a simple example, if the output of the PID loop that is controlling the damper is 50%, the damper position is half-way open; if the output of the loop is 100%, the damper position is fully open.

The controller uses up to four PID control loops:

- The output of either the **heating** loop or the **cooling** loop is used to control the position of the damper.
- The **discharge air** loop and the DAT input (if present) control the reheat loop.
- The **reheat** loop is used to control the temperature of the discharge air.

The PID control loops in the controller are standard BACnet objects.

Airflow Setpoints Sequence (VAV)

NOTE: See **Illustration: VAV Airflow Operations on page 70**. See also **Reheat (VAV) on page 77**.

If no room sensor is connected to the controller, the controller uses the Minimum Cooling Airflow setpoint to maintain airflow.

Cool Air Sequence: As the Cooling loop increases from 0% to 100%, the Primary Airflow Setpoint is proportionally calculated between the Minimum Cooling Airflow and the Maximum Cooling Airflow. If there is a call for reheat to maintain room temperature, the primary airflow is set to the value of Auxiliary Flow.

Warm Air Available: In the heating mode, as the Heating Loop increases from 0% to 100%, the Primary Airflow Setpoint is proportionally calculated between the Minimum Heating Airflow and the Maximum Heating Airflow.

Cooling/Heating Changeover (VAV)

The DAT input (AI3) is used by the controller to determine the type of air being supplied by the AHU or RTU. The DAT sensor is required for applications that require automatic changeover between cooling and heating.

The changeover function is disabled while Heating (reheat) is active. Changeover is enabled again 3 minutes after Heating ends. (This is because the same sensor is used for DAT and changeover.)

When Heating is inactive, the DAT input is compared to the SAT Changeover Temperature (AV37). If the DAT is below the SAT Changeover Temperature minus 2°, the SAT Changeover Mode is set to Cooling. If the DAT is above the SAT Changeover Temperature plus 2° F, the SAT Changeover Mode is set to Heating. The default changeover temperature is 74° F.

NOTE: The **SAT (Supply Air Temperature)** is the temperature of the air in the duct supplied by the AHU or RTU and entering into the VAV box before any reheat is applied. The **DAT (Discharge Air Temperature)** is the temperature of the air leaving from the VAV box and entering the room. A DAT sensor can be used to measure SAT since they are equivalent as long as no reheat is active.

NOTE: See also **Reheat (VAV) on page 77**.

Discharge Air Temperature (DAT) Limiting (VAV)

If a DAT sensor is detected and DAT Limiting is enabled, the VAV terminal will be controlled by the DAT loop. When there is a call for heat and the primary air is cool air, the reheat outputs are directly controlled by the DAT Loop and the DAT Setpoint reset based on the output of the Heating loop. As the Heating loop increases from 0% to 50%, the DAT Setpoint is proportionally calculated between the Space Temperature Reference and the Space Temperature Reference +15° F up to a maximum of 90° F. This allows the reheat to be controlled by the DAT loop over the first 50% of a call for heat.

If DAT Limiting is enabled, and a DAT sensor is not connected, the controller will lock out reheat control only in the cooling mode. The unit will operate this way until a DAT sensor is detected or DAT limiting is disabled.

If DAT Limiting is disabled, the unit's reheat is controlled by the Heating loop instead of the DAT loop. ***See also*** **Reheat (VAV) on page 77.**

Reheat (VAV)

Types and Control of Reheat

The controllers can control four types of reheat installations:

- Modulating
- Time-proportioned
- Floating
- Staged

NOTE: See **Illustration: VAV Reheat Operations on page 71**.

All reheat is controlled by either the Heating loop or the Discharge Air Temp Limiting (DAT) PID loop. See **PID (Proportional Integral Derivative) Loops (VAV) on page 75**.

- If Discharge Air Temp Limiting is enabled, reheat is controlled by the DAT PID loop.
- If DAT control is not enabled, reheat is controlled by the Heating loop.

In the following descriptions, the PID loop controlling reheat is referred to as the Reheat loop.

Modulating Reheat

If the controller is configured for modulating reheat, it controls an analog reheat unit with 0–10 VDC at the analog reheat output. On a call for reheat, the reheat output is modulated over the span of the Reheat loop. If the Reheat loop is less than 10%, the reheat output remains at zero. The reheat is set to zero if the Cooling loop is active.

Time Proportioned Reheat

For controllers configured for time proportional reheat, the duty cycle of a binary triac output varies over a 10 second period. For example, if the Reheat loop is at 50%, the reheat output is On for 5 seconds and Off for 5 seconds. If the Reheat loop is less than 10%, the reheat output remains at zero.

Floating Reheat

If the controller is configured for floating reheat, it controls two binary triac outputs to drive the inputs of a tri-state actuator connected to a valve. If the Reheat loop is less than 30%, the valve is driven closed. If the loop is greater than 70%, the valve is driven open. If the loop is in between 30% and 70%, no valve action is taken.

Staged Reheat

If the controller is configured for staged reheat, it can control up to three stages of reheat through binary triac outputs. The reheat outputs are commanded On when the Reheat loop rises above the On threshold and Off when the loop drops below the Off threshold. Thresholds and stage activation are shown in the following table.

HEATING STAGES	OUTPUT STATE	
	ON THRESHOLD	OFF THRESHOLD
Stage 1	35%	15%
Stage 2	65%	45%
Stage 3	95%	75%

Illustration: Staged Reheat Thresholds

Damper Operation (VAV)

Damper movement is determined by comparing the actual airflow reading to the airflow setpoints. If the actual airflow is within 5% of the setpoint, no damper action is initiated. Once within the 5% deadband, the actual airflow must be outside a 7% deadband before damper position changes.

Fan Operation (VAV)

The controllers support both series and parallel fan powered VAV units. See **Illustration: VAV Fan Operations on page 71**. For either type of fan operation, the fan is controlled through the following terminals:

- A binary output triac controls a 24-volt fan starting circuit.
- A 0–10 VDC analog output controls the speed of the fan. The output controls fan speed at either Min Fan Speed or Max Fan Speed. See the topic Set the airflow setpoints on page 34 for the procedure to set the fan speeds.

If the VAV unit is not configured for a fan, the two outputs are not used and remain inactive regardless of the occupancy state.

Series Fan

If the controller is configured for a series fan, any time the Occupancy mode of the controller is set to either Occupied or Standby, the fan runs continuously. The fan speed is set to Maximum Fan Speed when the state is Occupied and set to Minimum Fan Speed when the state is Standby.

When the Occupancy state is Unoccupied, the fan starts and runs at minimum speed only on a call for heating. The fan starts when the Heating loop is greater than 5% and stops when the Heating loop is less than 1%.

Parallel Fan

If the controller is configured for a parallel fan, any time the Occupancy mode of the controller is set to either Occupied or Standby and there is a call for heat, the fan runs continuously. The fan starts when the Heating loop is greater than 5% and stops when the Heating loop is less than 1%.

When the unit Occupancy state is Unoccupied, the fan starts and runs at minimum speed only on a call for heating. The fan starts when the Heating loop is greater than 5% and stops when the Heating loop is less than 1%.

Dual Duct (VAV)

A dual duct installation consists of separate primary heating and cooling ducts, both with control dampers and airflow monitoring. For this type of installation a BAC-9001 controller-actuator controls the cooling air (primary) damper and a TSP-8003 actuator controls the heating air (secondary) damper.

- As the space temperature rises above the cooling setpoint, the primary airflow is modulated from the Cooling Minimum flow to the Cooling Maximum Flow.
- As the space temperature falls below the heating setpoint, the secondary airflow is modulated from the Heating Minimum flow to the Heating Maximum Flow.
- Between the heating and cooling setpoints, both the primary airflow and secondary airflow are modulated to maintain the Dual Duct Minimum airflow.

Balancing Airflow (VAV)

Balancing airflow is the process of calibrating the internal airflow sensor to a known standard. In the field, airflow is measured with an airflow hood or other measuring instrument and then compared to the airflow measurements from the sensor in the controller. The balancing process uses a KMC Conquest STE-9000 series NetSensor as the technician setup tool for initiating the balancing sequence and entering actual flow measurements.

When the balancing sequence starts, all other functions of the controller are locked out.

At the start of the sequence, the controller drives the damper open until the airflow reaches the highest value of either the cooling or heating maximum airflow setpoints. An airflow measurement is made with an airflow hood and the actual airflow value is entered into the controller. Once the actual airflow is entered, the controller drives the damper closed to the lower value of either the cooling or heating minimum airflow. Another measurement is made with the flow hood and that measurement is entered into the controller.

After the minimum airflow measurement is entered, the programming in the controller calculates the airflow correction factors, which are used to adjust the measurements from the internal airflow sensor. Balancing is complete and the controller is returned to normal operation.

NOTE: For the procedure to balance the airflow with a Conquest NetSensor, see **VAV Airflow Balancing with an STE-9xx1 on page 32**.

System Diagnostics (VAV)

Object Types Monitored

The controller programming includes four system diagnostic indicators in the form of BACnet value objects.

- Need AHU start
- Need for cooler supply air
- Need for warmer supply air
- Need for higher static pressure

These diagnostic indicators or flags are monitored by other BACnet devices connected to the same building automation system as the controller. (See the documentation for the relevant equipment.)

Need AHU Start (BV1)

The Need AHU Start value object is set to Active for any of the following conditions:

- The system mode is Unoccupied and the Cooling loop or the Heating loop reaches 100%.
- The system mode is Occupied.
- The system mode is Standby.

The Need AHU Start object changes to Inactive when both loops drop below 5%.

Need for Cooler Supply Air (BV2)

The Need Cooler Supply value object is set to Active when the damper is fully open and the Cooling loop is greater than 95% for 30 minutes. The indicator changes to Inactive when the Cooling loop falls below 90%.

Need For Warmer Supply Air (BV7)

The Need Warmer Supply value object is set to Active when the damper is fully open and the Heating loop is greater than 95% for 30 minutes. The indicator changes to Inactive when the Heating loop falls below 90%.

Need for Higher Static Pressure (BV3)

The Need Higher Static value object is set to Active when the damper is fully open and airflow cannot reach the required setpoint value.

SYSTEM INTEGRATION AND NETWORKING

Networking

See **MS/TP Network Connections on page 20** and **Ethernet Network Connections on page 22**.

BACnet Objects List

General Notes

NOTE: Objects are dependent on controller model and application. Use KMC Connect, KMC Converge, or TotalControl to check relevant objects in a controller.

NOTE: Objects can be **deleted or created** in KMC Connect, KMC Converge, or TotalControl. If needed objects are "missing," check the application and create the required objects. See the Help system in the relevant program for more information about creating and deleting objects. As a best practice when doing custom configuration and programming, **avoid reusing objects for custom programs that are reserved for KMC default programs**. Create new objects for custom programming instead. This avoids having custom objects being overwritten in the future during events such as a firmware upgrade.

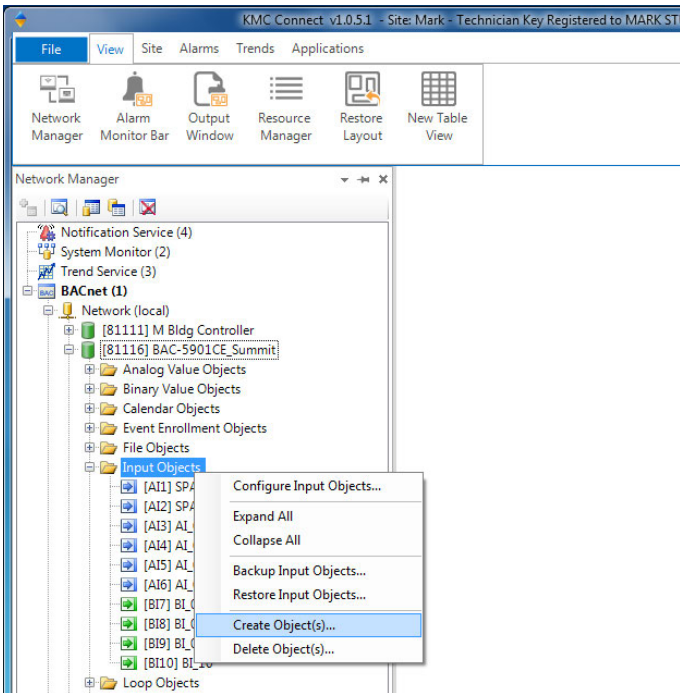

Illustration: Creating Objects in KMC Connect

NOTE: AI1 and AI2 are dedicated for use with the analog electronic STE-6010/6014/6017 sensors but not the digital STE-9xx1 NetSensors or any other sensors. Room temperature and setpoints are mapped to value objects. See **Digital STE-9000 Series NetSensors on page 10** and **Analog STE-6000 Series Thermistor Sensors on page 12**.

On the following pages, see:

- **BAC-5900 Series (General Purpose Controller) Objects on page 82**
- **BAC-9000 Series (VAV Controller) Objects on page 83**
- **BAC-9300 Series (Unitary Controller) Objects on page 92**

BAC-5900 Series (General Purpose Controller) Objects

BAC-5901 GENERAL PURPOSE OBJECTS				
OBJECT	**NAME**	**DESCRIPTION**	**UNITS or STATE**	**DEFAULT**
Inputs				
AI1	SPACE SENSOR	Space Sensor	KMC Type II Deg F	
AI2	SPACE SETPOINT	Space Setpoint	TABLE_4	
Values				
AV1	SPACE_TEMP	Space Temperature	Degrees F	0
AV2	AV_02	Analog Value #2	No Units	0
AV3	ACT_COOL_STPT	Active Cooling Setpoint	Degrees F	74
AV4	ACT_HEAT_STPT	Active Heating Setpoint	Degrees F	72
AV5	OCC_CL_STPT	Occupied Cooling Setpoint	Degrees F	76
AV6	OCC_HT_STPT	Occupied Heating Setpoint	Degrees F	72
AV7	UNOCC_CL_STPT	Unoccupied Cooling Setpoint	Degrees F	80
AV8	UNOCC_HT_STPT	Unoccupied Heating Setpoint	Degrees F	65
AV9	MIN_CL_STPT	Minimum Cooling Setpoint	Degrees F	68
AV10	MAX_HT_STPT	Maximum Heating Setpoint	Degrees F	76
AV11	MIN_STPT_DIFF	Minimum Setpoint Differential	Degrees F	2
AV12	STBY_OFFSET	Standby Offset	Degrees F	3
AV21	REL_HUMIDITY	Relative Humidity	Relative Humidity	0
AV38	OVRD_TIME	Local Override Timer	Minutes	60
AV57	ROOM CO2	Room CO2 Level	Parts per Million	0
BV28	LOCAL_OVRD	Local Override Mode		Inactive
BV40	ICO_FAN	Fan Icon		Inactive
BV41	ICO_FAN_LOW	Icon Fan Low Speed		Inactive
BV42	ICO_FAN_MEDIUM	Icon Fan Medium Speed		Inactive
BV43	ICO_FAN_HIGH	Icon Fan Auto		Inactive
BV44	ICO_FAN_AUTO	Icon Fan Auto		Inactive
BV45	ICO_OCCUPIED	Icon Occupied		Inactive
BV46	ICO_STANDBY	Icon Standby		Inactive
BV47	ICO_COOLING	Icon Cooling		Inactive
BV48	ICO_HEATING	Icon Heating		Inactive
BV49	ICO_AUTO_MODE	Icon Auto Mode		Inactive
BV50	ICO_OVERRIDE	Icon Override		Inactive
MSV2	SYSTEM_MODE	Control Mode	OFF	2
			AUTO	
			COOL	
			HEAT	

NOTE: As a best practice when doing custom configuration and programming, **avoid reusing objects for custom programs that are reserved for KMC default programs**. Create new objects for custom programming instead. This avoids having custom objects being overwritten in the future during events such as a firmware upgrade.

BAC-9000 Series (VAV Controller) Objects

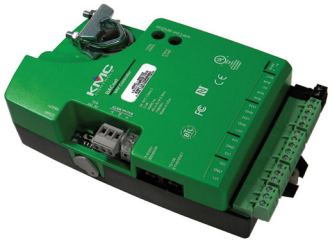

BAC-9001 PRESSURE INDEPENDENT VAV, SINGLE DUCT OBJECTS				
OBJECT	**NAME**	**DESCRIPTION**	**UNITS or STATE**	**DEFAULT**
Inputs				
AI1	SPACE SENSOR	Space Sensor	KMC Type II Deg F	
AI2	SPACE SETPOINT	Space Setpoint	TABLE_4	
AI3	DISCHARGE AIR	Discharge Air Temperature	KMC10K_Type_III	
AI7	PRIMARY DUCT	Primary Duct Pressure	NONE	
AI8	PRIMARY POSITION	Primary Damper Position		
Outputs				
AO3	ANALOG HEAT	Analog Heat	0_100%	0
AO4	FAN SPEED	Fan Speed	0_100%	0
BO1	PRI DAMPER CW	Primary Damper Clockwise	Unknown	Inactive
BO2	PRI DAMPER CCW	Primary Damper Counter Clockwise	Unknown	Inactive
BO6	FAN	Fan	Unknown	Inactive
BO7	HT STAGE 1	Heating Stage 1	Unknown	Inactive
BO8	HT STAGE 2	Heating Stage 2	Unknown	Inactive
BO9	HT STAGE 3	Heating Stage3	Unknown	Inactive
Values				
AV1	SPACE TEMP	Space Temperature	Degrees F	0
AV2	STPT REFERENCE	Setpoint Reference	Degrees F	72
AV3	ACT COOL STPT	Active Cooling Setpoint	Degrees F	74
AV4	ACT HEAT STPT	Active Heating Setpoint	Degrees F	70
AV5	OCC CL STPT	Occupied Cooling Setpoint	Degrees F	74
AV6	OCC HT STPT	Occupied Heating Setpoint	Degrees F	70
AV7	UNOCC CL STPT	Unoccupied Cooling Setpoint	Degrees F	80
AV8	UNOCC HT STPT	Unoccupied Heating Setpoint	Degrees F	64
AV9	MIN CL STPT	Minimum Cooling Setpoint	Degrees F	68
AV10	MAX HT STPT	Maximum Heating Setpoint	Degrees F	76
AV11	MIN STPT DIFF	Minimum Setpoint Differential	Degrees F	4
AV12	STBY_OFFSET	Standby Offset	Degrees F	3
AV13	MIN COOL FLOW	Minimum Cooling Flow	Cubic Feet per Minute	100
AV14	MAX COOL FLOW	Maximum Cooling Flow	Cubic Feet per Minute	400
AV15	MIN HEAT FLOW	Minimum Heating Flow	Cubic Feet per Minute	100
AV16	MAX HEAT FLOW	Maximum Heating Flow	Cubic Feet per Minute	400
AV17	AUXILLARY FLOW	Auxillary Flow	Cubic Feet per Minute	200
AV18	PRI K FACT	Primary K Factor	No Units	904
AV19	PRI CORR SLOPE	Primary Correction Slope	No Units	1
AV20	PRI CORR OFFST	Primary Correction Offset	Cubic Feet per Minute	0
AV21	PRI LO FLOW CORR	Primary Low Flow Correction	No Units	1
AV22	PRI FLOW STPT	Primary Flow Setpoint	Cubic Feet per Minute	0
AV23	PRI RAW FLOW	Primary Raw Flow	Cubic Feet per Minute	0
AV24	PRI ACTUAL FLOW	Primary Actual Flow	Cubic Feet per Minute	0
AV25	AV_25	Analog Value #25	No Units	0
AV32	MIN FAN SPEED	Minimum Fan Speed	Percent	25
AV33	MAX FAN SPEED	Maximum Fan Speed	Percent	100
AV34	AV_34	Analog Value #34	No Units	0
AV36	DAT RESET	Discharge Air Temp Setpoint	Degrees F	90

BAC-9001 PRESSURE INDEPENDENT VAV, SINGLE DUCT OBJECTS				
OBJECT	**NAME**	**DESCRIPTION**	**UNITS or STATE**	**DEFAULT**
AV37	SAT CHANGEOVER	SAT Changeover Temperature	Degrees F	72
AV38	LOCAL OVRD TIME	Local Override Timer	Minutes	60
AV39	STANDBY TIMER	Standby Timer (motion)	Minutes	15
AV40	OCCUPANCY TRIGGE	Occupancy Trigger	Minutes	5
AV41	REL_HUMIDITY	Relative Humidity	Relative Humidity	0
AV43	MEASURED MAX	Measured Maximum	Cubic Feet per Minute	0
AV44	MEASURED MIN	Measured Minimum	Cubic Feet per Minute	0
AV45	PRI SAVE MIN FLO	Primary Saved Minimum Airflow	Cubic Feet per Minute	0
AV46	AV_46	Analog Value #46	No Units	0
AV47	DAT MAXIMUM	Maximum DAT Setpoint	Degrees F	90
AV48	CCW DMP POS	CCW Damper Position	Volts	0
AV49	CW DMP POS	CW Damper Position	Volts	0.01
AV50	DAMPER POSITION	Damper Position	Percent	0
AV51	APP_ID	Application Identification	No Units	0
AV54	MOTOR PAUSE	Delays Motor Close to Setpoint	Seconds	0
AV55	CHNG OVER DELAY	Heating Change Over Delay	Minutes	3
AV56	LOW AUTO OCC	Low Limit for Auto Occupy	Cubic Feet per Minute	50
AV57	ROOM CO2	Room CO2 Level	Parts per Million	0
BV1	NEED AHU	Needl For AHU		Inactive
BV2	NEED COLDER SPLY	Need For Colder Air Supply		Inactive
BV3	NEED MORE STATIC	Need For More Static Pressure		Inactive
BV4	LOCAL OVRD	Local Override Mode		Inactive
BV5	MOTION OVRD	Motion Override Mode		Inactive
BV6	MOTION SENSOR	Motion Sensor (Wall Stat)		Inactive
BV7	NEED HOTTER SPLY	Need For Hotter Air Supply		Inactive
BV8	SUPPLY AIR TYPE	Supply Air Type		Active
BV9	DAT LIMITING	Discharge Air Temp Limiting		Inactive
BV10	DIR TO CLOSE	Direction to Close		Inactive
BV11	AUTO OCCUPANCY	Auto Occupancy Detection		Inactive
BV12	BALANCE MODE	Balance Mode		Inactive
BV13	DAT SENSOR	DAT Sensor Present		Inactive
BV14	PRI BAL TRIGGER	Primary Balance Trigger		Inactive
BV15	BV_15	Binary Value #15		Inactive
BV40	ICO_FAN	Fan Icon		Inactive
BV41	ICO_FAN_LOW	Icon Fan Low Speed		Inactive
BV42	ICO_FAN_MEDIUM	Icon Fan Medium Speed		Inactive
BV43	ICO_FAN_HIGH	Icon Fan Auto		Inactive
BV44	ICO_FAN_AUTO	Icon Fan Auto		Inactive
BV45	ICO_OCCUPIED	Icon Occupied		Inactive
BV46	ICO_STANDBY	Icon Standby		Inactive
BV47	ICO_COOLING	Icon Cooling		Inactive
BV48	ICO_HEATING	Icon Heating		Inactive
BV49	ICO_AUTO_MODE	Icon Auto Mode		Inactive
BV50	ICO_OVERRIDE	Icon Override		Inactive

NOTE: As a best practice when doing custom configuration and programming, **avoid reusing objects for custom programs that are reserved for KMC default programs**. Create new objects for custom programming instead. This avoids having custom objects being overwritten in the future during events such as a firmware upgrade.

BAC-9001 PRESSURE INDEPENDENT VAV, SINGLE DUCT OBJECTS				
OBJECT	**NAME**	**DESCRIPTION**	**UNITS or STATE**	**DEFAULT**
MSV1	OCCUPIED MODE	Occupied Mode	OCCUPIED	1
			STANDBY	
			UNOCCUPIED	
			LOCAL OVERRIDE	
			MOTION OVERRIDE	
MSV2	FAN CONFIG	Fantype Configuration	NONE	1
			SERIES	
			PARALLEL	
MSV3	REHEAT	Reheat Type	NONE	1
			STAGED	
			MODULATING	
			FLOATING	
			TIME PROP	
MSV4	STPT_MODE	User Setpoint Mode	Heat	1
			Cool	
			Unocc Heat	
			Unocc Cool	
MSV8	OCCUPIED STATE	Occupied State	OCCUPIED	1
			STANDBY	
			UNOCCUPIED	
			LOCAL OVERRIDE	
MSV10	WALL SENSOR	Wall Sensor Type	STE-9001 TEMP	1
			STE-9021 HUMIDITY	
			STE-9201 MOTION	
			STE-9221 HUMIDITY/ MOTION	
			STE-9301 CO2	
			STE-9321 HUMIDITY/CO2	
			STE-9501 MOTION/CO2	
			STE-9521 HUMIDITY/MO-TION/CO2	
			STE-6014/7	
			STE-6010	
			NONE	

NOTE: As a best practice when doing custom configuration and programming, **avoid reusing objects for custom programs that are reserved for KMC default programs**. Create new objects for custom programming instead. This avoids having custom objects being overwritten in the future during events such as a firmware upgrade.

BAC-9001 PRESSURE INDEPENDENT VAV, DUAL DUCT OBJECTS				
OBJECT	**NAME**	**DESCRIPTION**	**UNITS or STATE**	**DEFAULT**
Inputs				
AI1	SPACE SENSOR	Space Sensor	KMC10K_Type_II	
AI2	SPACE SETPOINT	Space Setpoint	TABLE_4	
AI3	DISCHARGE AIR	Discharge Air Temperature	KMC10K_Type_III	
AI4	AI_04	Analog Input #4	no sensor	
AI5	SECONDARY DUCT	Secondary Duct Pressure	NONE	
AI6	SECONDARY POS	Secondary Damper Position	Volts_0_to_5	
AI7	PRIMARY DUCT	Primary Duct Pressure	NONE	
AI8	PRIMARY POSITION	Primary Damper Position	Volts_0_to_5	
Outputs				
AO3	AO_03	Analog Output #3	no sensor	0
AO4	AO_04	Analog Output #4	no sensor	0
AO5	AO_05	Analog Output #5	no sensor	0
BO1	PRI DAMPER CW	Primary Damper Clockwise	Unknown	Inactive
BO2	PRI DAMPER CCW	Primary Damper Counter Clockwise	Unknown	Inactive
BO6	BO_06	Binary Output #6	no sensor	Inactive
BO7	SEC DAMPER CW	Secondary Damper Clockwise	Unknown	Inactive
BO8	SEC DAMPER CCW	Secondary Damper CounterCW	Unknown	Inactive
BO9	BO_09	Binary Output #9	no sensor	Inactive
Values				
AV1	SPACE TEMP	Space Temperature	Degrees F	0
AV2	STPT REFERENCE	Setpoint Reference	Degrees F	72
AV3	ACT COOL STPT	Active Cooling Setpoint	Degrees F	68
AV4	ACT HEAT STPT	Active Heating Setpoint	Degrees F	64
AV5	OCC CL STPT	Occupied Cooling Setpoint	Degrees F	68
AV6	OCC HT STPT	Occupied Heating Setpoint	Degrees F	64
AV7	UNOCC CL STPT	Unoccupied Cooling Setpoint	Degrees F	80
AV8	UNOCC HT STPT	Unoccupied Heating Setpoint	Degrees F	64
AV9	MIN CL STPT	Minimum Cooling Setpoint	Degrees F	68
AV10	MAX HT STPT	Maximum Heating Setpoint	Degrees F	76
AV11	MIN STPT DIFF	Minimum Setpoint Differential	Degrees F	4
AV12	STBY_OFFSET	Standby Offset	Degrees F	3
AV13	MIN COOL FLOW	Minimum Cooling Flow	Cubic Feet per Minute	100
AV14	MAX COOL FLOW	Maximum Cooling Flow	Cubic Feet per Minute	400
AV15	MIN HEAT FLOW	Minimum Heating Flow	Cubic Feet per Minute	100
AV16	MAX HEAT FLOW	Maximum Heating Flow	Cubic Feet per Minute	400
AV17	DUAL MINIMUM	Dual Minimum	Cubic Feet per Minute	400
AV18	PRI K FACT	Primary K Factor	No Units	904
AV19	PRI CORR SLOPE	Primary Correction Slope	No Units	1
AV20	PRI CORR OFFST	Primary Correction Offset	Cubic Feet per Minute	0
AV21	PRI LO FLOW CORR	Primary Low Flow Correction	No Units	1
AV22	PRI FLOW STPT	Primary Flow Setpoint	Cubic Feet per Minute	0
AV23	PRI RAW FLOW	Primary Raw Flow	Cubic Feet per Minute	0
AV24	PRI ACTUAL FLOW	Primary Actual Flow	Cubic Feet per Minute	0

NOTE: As a best practice when doing custom configuration and programming, **avoid reusing objects for custom programs that are reserved for KMC default programs**. Create new objects for custom programming instead. This avoids having custom objects being overwritten in the future during events such as a firmware upgrade.

BAC-9001 PRESSURE INDEPENDENT VAV, DUAL DUCT OBJECTS				
OBJECT	**NAME**	**DESCRIPTION**	**UNITS or STATE**	**DEFAULT**
AV25	SEC K FACT	Secondary K Factor	No Units	904
AV26	SEC CORR SLOPE	Secondary Correction Slope	No Units	1
AV27	SEC CORR OFFST	Secondary Correction Offset	Cubic Feet per Minute	0
AV28	SEC LO FLOW CORR	Secondary Low Flow Correction	No Units	1
AV29	SEC FLOW STPT	Secondary Flow Setpoint	Cubic Feet per Minute	0
AV30	SEC RAW FLOW	Secondary Raw Flow	Cubic Feet per Minute	0
AV31	SEC ACTUAL FLOW	Secondary Actual Flow	Cubic Feet per Minute	0
AV32	AV_32	Analog Value #32	No Units	0
AV38	LOCAL OVRD TIME	Local Override Timer	Minutes	60
AV39	STANDBY TIMER	Standby Timer (motion)	Minutes	15
AV40	OCCUPANCY TRIGGE	Occupancy Trigger	Minutes	5
AV41	REL_HUMIDITY	Relative Humidity	Relative Humidity	0
AV42	AV_42	Analog Value #42	No Units	0
AV43	MEASURED MAX	Measured Maximum	Cubic Feet per Minute	0.3
AV44	MEASURED MIN	Measured Minimum	Cubic Feet per Minute	0.3
AV45	PRI SAVE MIN FLO	Primary Saved Minimum Airflow	Cubic Feet per Minute	0.3
AV46	SEC SAVE MIN FLO	Secondary Save Min Flow	Cubic Feet per Minute	0.3
AV47	AV_47	Analog Value #47	No Units	0
AV48	CCW DMP POS	CCW Damper Position	Volts	3
AV49	CW DMP POS	CW Damper Position	Volts	2.999725
AV50	DAMPER POSITION	Damper Position	Percent	0
AV51	APP_ID	Application Identification	No Units	0
AV52	SEC CCW DMP POS	CCW Damper Position	Volts	0.5
AV53	SEC CW DMP POS	CW Damper Position	Volts	2.9
AV54	MOTOR PAUSE	Delays Motor Close to Setpoint	Seconds	0
AV55	AV_55	Analog Value #55	No Units	0
AV56	LOW AUTO OCC	Low Limit for Auto Occupy	Cubic Feet per Minute	50
AV57	ROOM CO2	Room CO2 Level	Parts per Million	0
AV58	AV_58	Analog Value #58	No Units	
AV60	SEC DAMPER POSITION	Damper Position	Percent	0
BV1	NEED AHU	Needl For AHU		Inactive
BV2	NEED COLDER SPLY	Need For Colder Air Supply		Inactive
BV3	NEED MORE STATIC	Need For More Static Pressure		Inactive
BV4	LOCAL OVRD	Local Override Mode		Inactive
BV5	MOTION OVRD	Motion Override Mode		Inactive
BV6	MOTION SENSOR	Motion Sensor (Wall Stat)		Inactive
BV7	NEED HOTTER SPLY	Need For Hotter Air Supply		Inactive
BV8	SUPPLY AIR TYPE	Supply Air Type		Active
BV9	NEED SEC STATIC	Need More Secondary Static		Inactive
BV10	DIR TO CLOSE	Direction to Close		Inactive
BV11	AUTO OCCUPANCY	Auto Occupancy Detection		Inactive
BV12	PRI BALANCE MODE	Primary Balance Mode		Inactive
BV13	SEC BALANCE MODE	Secondary Balance Mode		Inactive
BV14	PRI BAL TRIGGER	Primary Balance Trigger		Inactive
BV15	SEC BAL TRIGGER	Secondary Balance Trigger		Inactive
BV16	BV_16	Binary Value #16		Inactive
BV40	ICO_FAN	Fan Icon		Inactive
BV41	ICO_FAN_LOW	Icon Fan Low Speed		Inactive
BV42	ICO_FAN_MEDIUM	Icon Fan Medium Speed		Inactive
BV43	ICO_FAN_HIGH	Icon Fan Auto		Inactive

NOTE: As a best practice when doing custom configuration and programming, **avoid reusing objects for custom programs that are reserved for KMC default programs**. Create new objects for custom programming instead. This avoids having custom objects being overwritten in the future during events such as a firmware upgrade.

BAC-9001 PRESSURE INDEPENDENT VAV, DUAL DUCT OBJECTS				
OBJECT	**NAME**	**DESCRIPTION**	**UNITS or STATE**	**DEFAULT**
BV44	ICO_FAN_AUTO	Icon Fan Auto		Inactive
BV45	ICO_OCCUPIED	Icon Occupied		Inactive
BV46	ICO_STANDBY	Icon Standby		Inactive
BV47	ICO_COOLING	Icon Cooling		Inactive
BV48	ICO_HEATING	Icon Heating		Inactive
BV49	ICO_AUTO_MODE	Icon Auto Mode		Inactive
BV50	ICO_OVERRIDE	Icon Override		Inactive
MSV1	OCCUPIED MODE	Occupied Mode	OCCUPIED	1
			STANDBY	
			UNOCCUPIED	
			LOCAL OVERRIDE	
			MOTION OVERRIDE	
MSV2	MSV_02	Multistate Variable #2		
MSV3	MSV_03	Multistate Variable #3		
MSV4	STPT_MODE	User Setpoint Mode	Heat	1
			Cool	
			Unocc Heat	
			Unocc Cool	
MSV8	OCCUPIED STATE	Occupied State	OCCUPIED	1
			STANDBY	
			UNOCCUPIED	
			LOCAL OVERRIDE	
MSV10	WALL SENSOR	Wall Sensor Type	STE-9001 TEMP	1
			STE-9021 HUMIDITY	
			STE-9201 MOTION	
			STE-9221 HUMIDITY/ MOTION	
			STE-9301 CO2	
			STE-9321 HUMIDITY/CO2	
			STE-9501 MOTION/CO2	
			STE-9521 HUMIDITY/MO-TION/CO2	
			STE-6014/7	
			STE-6010	
			NONE	

NOTE: As a best practice when doing custom configuration and programming, **avoid reusing objects for custom programs that are reserved for KMC default programs**. Create new objects for custom programming instead. This avoids having custom objects being overwritten in the future during events such as a firmware upgrade.

BAC-9021 PRESSURE DEPENDENT VAV, SINGLE DUCT OBJECTS				
OBJECT	**NAME**	**DESCRIPTION**	**UNITS or STATE**	**DEFAULT**
Inputs				
AI1	SPACE SENSOR	Space Sensor	KMC Type II Deg F	
AI2	SPACE SETPOINT	Space Setpoint	TABLE_4	
AI3	DISCHARGE AIR	Discharge Air Temperature	KMC10K_Type_III	
AI8	PRIMARY POSITION	Primary Damper Position		
Outputs				
AO3	ANALOG HEAT	Analog Heat	0_100%	0
AO4	AO_04	Analog Output #5	0_100%	0
BO1	PRI DAMPER CW	Primary Damper Clockwise	Unknown	Inactive
BO2	PRI DAMPER CCW	Primary Damper Counter Clockwise	Unknown	Inactive
BO6	BO_06	Binary Output #6	Unknown	Inactive
BO7	HT STAGE 1	Heating Stage 1	Unknown	Inactive
BO8	HT STAGE 2	Heating Stage 2	Unknown	Inactive
BO9	HT STAGE 3	Heating Stage3	Unknown	Inactive
Values				
AV1	SPACE TEMP	Space Temperature	Degrees F	0
AV2	STPT REFERENCE	Setpoint Reference	Degrees F	72
AV3	ACT COOL STPT	Active Cooling Setpoint	Degrees F	77
AV4	ACT HEAT STPT	Active Heating Setpoint	Degrees F	67
AV5	OCC CL STPT	Occupied Cooling Setpoint	Degrees F	74
AV6	OCC HT STPT	Occupied Heating Setpoint	Degrees F	70
AV7	UNOCC CL STPT	Unoccupied Cooling Setpoint	Degrees F	80
AV8	UNOCC HT STPT	Unoccupied Heating Setpoint	Degrees F	64
AV9	MIN CL STPT	Minimum Cooling Setpoint	Degrees F	68
AV10	MAX HT STPT	Maximum Heating Setpoint	Degrees F	76
AV11	MIN STPT DIFF	Minimum Setpoint Differential	Degrees F	4
AV12	STBY_OFFSET	Standby Offset	Degrees F	3
AV13	AV_13	Analog Value #13	No Units	0
AV36	DAT STPT	Discharge Air Temp Setpoint	Degrees F	90
AV37	SAT CHANGEOVER	SAT Changeover Temperature	Degrees F	72
AV38	LOCAL OVRD TIME	Local Override Timer	Minutes	60
AV39	STANDBY TIMER	Standby Timer (motion)	Minutes	15
AV40	OCCUPANCY TRIGGE	Occupancy Trigger	Minutes	5
AV41	REL_HUMIDITY	Relative Humidity	Relative Humidity	0
AV47	DAT MAXIMUM	Maximum DAT Setpoint	Degrees F	90
AV48	CCW DMP POS	CCW Damper Position	Volts	0
AV49	CW DMP POS	CW Damper Position	Volts	0.01
AV50	DAMPER POSITION	Damper Position	Percent	0
AV51	APP_ID	Application Identification	No Units	0
AV55	CHNG_OVER_DELAY	Cooling Change Over Delay	Minutes	3
AV56	LOW AUTO OCC	Low Limit for Auto Occupy	Cubic Feet per Minute	50
AV57	AV_57	Analog Value #57	No Units	0

NOTE: As a best practice when doing custom configuration and programming, **avoid reusing objects for custom programs that are reserved for KMC default programs**. Create new objects for custom programming instead. This avoids having custom objects being overwritten in the future during events such as a firmware upgrade.

BAC-9021 PRESSURE DEPENDENT VAV, SINGLE DUCT OBJECTS				
OBJECT	**NAME**	**DESCRIPTION**	**UNITS or STATE**	**DEFAULT**
AV64	DAMPER STPT	Damper Setpoint	Percent	0
AV65	MIN COOL DMPR	Minimum Cooling Damper Position	Percent	10
AV66	MAX COOL DMPR	Maximum Cooling Damper Position	Percent	100
AV67	MIN HEAT DMPR	Minimum Heating Damper Position	Percent	10
AV68	MAX HEAT DMPR	Maximum Heating Damper Position	Percent	100
AV69	AUXILLARY DMPR	Auxiliary Damper Position	Percent	50
BV1	NEED AHU	Need For AHU		Inactive
BV2	NEED COLDER SPLY	Need For Colder Air Supply		Inactive
BV3	NEED MORE STATIC	Need For More Static Pressure		Inactive
BV4	LOCAL OVRD	Local Override Mode		Inactive
BV5	MOTION OVRD	Motion Override Mode		Inactive
BV6	MOTION SENSOR	Motion Sensor (Wall Stat)		Inactive
BV7	NEED HOTTER SPLY	Need For Hotter Air Supply		Inactive
BV8	SUPPLY AIR TYPE	Supply Air Type		Active
BV9	DAT LIMITING	Discharge Air Temp Limiting		Inactive
BV10	DIR TO CLOSE	Direction to Close		Inactive
BV11	BV_11	Binary Value #11		Inactive
BV12	CALIBRATE DMPR	Start Damper Calibration		Inactive
BV13	DAT SENSOR	DAT Sensor Present		Inactive
BV14	BV_14	Binary Value #14		Inactive
BV40	ICO_FAN	Fan Icon		Inactive
BV41	ICO_FAN_LOW	Icon Fan Low Speed		Inactive
BV42	ICO_FAN_MEDIUM	Icon Fan Medium Speed		Inactive
BV43	ICO_FAN_HIGH	Icon Fan Auto		Inactive
BV44	ICO_FAN_AUTO	Icon Fan Auto		Inactive
BV45	ICO_OCCUPIED	Icon Occupied		Inactive
BV46	ICO_STANDBY	Icon Standby		Inactive
BV47	ICO_COOLING	Icon Cooling		Inactive
BV48	ICO_HEATING	Icon Heating		Inactive
BV49	ICO_AUTO_MODE	Icon Auto Mode		Inactive
BV50	ICO_OVERRIDE	Icon Override		Inactive
MSV1	OCCUPIED MODE	Occupied Mode	OCCUPIED	1
			STANDBY	
			UNOCCUPIED	
			LOCAL OVERRIDE	
			MOTION OVERRIDE	
MSV2	MSV_02	Multistate Variable #2		
MSV3	REHEAT	Reheat Type	NONE	1
			STAGED	
			MODULATING	
			FLOATING	
			TIME PROP	

BAC-9021 PRESSURE DEPENDENT VAV, SINGLE DUCT OBJECTS				
OBJECT	**NAME**	**DESCRIPTION**	**UNITS or STATE**	**DEFAULT**
MSV4	STPT_MODE	User Setpoint Mode	Heat	1
			Cool	
			Unocc Heat	
			Unocc Cool	
MSV8	OCCUPIED STATE	Occupied State	OCCUPIED	1
			STANDBY	
			UNOCCUPIED	
			LOCAL OVERRIDE	
MSV10	WALL SENSOR	Wall Sensor Type	STE-9001 TEMP	1
			STE-9021 HUMIDITY	
			STE-9201 MOTION	
			STE-9221 HUMIDITY/ MOTION	
			STE-9301 CO2	
			STE-9321 HUMIDITY/CO2	
			STE-9501 MOTION/CO2	
			STE-9521 HUMIDITY/MO-TION/CO2	
			STE-6014/7	
			STE-6010	
			NONE	

NOTE: As a best practice when doing custom configuration and programming, **avoid reusing objects for custom programs that are reserved for KMC default programs**. Create new objects for custom programming instead. This avoids having custom objects being overwritten in the future during events such as a firmware upgrade.

BAC-9300 Series (Unitary Controller) Objects

BAC-9301 2-PIPE FCU OBJECTS				
OBJECT	**NAME**	**DESCRIPTION**	**UNITS or STATE**	**DEFAULT**
Inputs				
AI1	SPACE SENSOR	Space Sensor	KMC Type II Deg F (10K)	
AI2	SPACE SETPOINT	Space Setpoint	TABLE_4	
AI3	DISCHARGE AIR	Discharge Air Temperature	KMC Type III Deg F (10K)	
AI4	OUTDOOR AIR	Outdoor Air Temp	KMC10K_Type_III	
AI5	HUMIDITY	Space Humidity	Humidity (0-100 % 0-5 v)	
AI6	WATER_TEMP	Supply Water Temperature	KMC Type III Deg F (10K)	
AI8	AI_08	Analog Input #8	no sensor	
BI7	FAN_ST	Fan	NONE	
Outputs				
AO7	ANALOG VALVE	Analog Valve Output	0-100% (0-10 V)	0
AO8	ANALOG AUX HEAT	Auxiliary Heat	0-100% (0-10V)	0
AO9	AO_09	Analog Output #9	NONE	0
AO10	ANALOG_FAN	Fan Speed Control	0-100% (0-10V)	0
BO1	LOW	Fan Low Speed	Unknown	Inactive
BO2	MEDIUM	Fan Medium Speed	Unknown	Inactive
BO3	HIGH	Fan High Speed	Unknown	Inactive
BO4	DIGITAL VALVE	Digital Valve	Unknown	Inactive
BO5	DIGITAL AUX HEAT	Auxiliary Heat	Unknown	Inactive
BO6	BO_06	Binary Output #6	Unknown	Inactive
Values				
AV1	SPACE_TEMP	Space Temperature	Degrees F	0
AV2	STPT REFERENCE	Setpoint Reference	Degrees F	72
AV3	ACT_COOL_STPT	Active Cooling Setpoint	Degrees F	80
AV4	ACT_HEAT_STPT	Active Heating Setpoint	Degrees F	64
AV5	OCC_CL_STPT	Occupied Cooling Setpoint	Degrees F	74
AV6	OCC_HT_STPT	Occupied Heating Setpoint	Degrees F	70
AV7	UNOCC_CL_STPT	Unoccupied Cooling Setpoint	Degrees F	80
AV8	UNOCC_HT_STPT	Unoccupied Heating Setpoint	Degrees F	64
AV9	MIN_CL_STPT	Minimum Cooling Setpoint	Degrees F	68
AV10	MAX_HT_STPT	Maximum Heating Setpoint	Degrees F	76
AV11	MIN_STPT_DIFF	Minimum Setpoint Differential	Degrees F	2
AV12	STBY_OFFSET	Standby Offset	Degrees F	3
AV13	AV_13	Analog Value #13	No Units	0
AV19	WATER _TEMP	Water Temperature	Degrees F	0
AV20	DISCHARGE_TEMP	Discharge Air Temp	Degrees F	0
AV21	REL_HUMIDITY	Relative Humidity	Relative Humidity	0
AV22	AV_22	Analog Value #22	No Units	0
AV25	FAN_OFF_DELAY	Fan Off Delay	Minutes	2
AV26	AV_26	Analog Value #26	No Units	0
AV28	STANDBY_TIMER	Inactivity Timer	Minutes	20
AV29	OCCUPANCY TRIGGE	Occupancy Trigger	Minutes	5
AV30	AV_30	Analog Value #30	No Units	0

BAC-9301 2-PIPE FCU OBJECTS				
OBJECT	**NAME**	**DESCRIPTION**	**UNITS or STATE**	**DEFAULT**
AV34	FAN_SPEED	Fan Speed	Percent	0
AV35	FAN_MAXIMUM	Fan Maximum Speed	Percent	100
AV36	FAN_MINIMUM	Fan Minimum Speed	Percent	35
AV37	AV_37	Analog Value #37	No Units	0
AV38	OVRD_TIME	Local Override Timer	Minutes	60
AV39	AV_39	Analog Value #39	No Units	0
AV51	APP_ID	Application Identification	No Units	0
AV52	COOL PROP	Cooling Proportional Band	Degrees F	2
AV53	HEAT PROP	Heating Proportional Band	Degrees F	2
AV54	COOL INTG	Cool Integral	Per Hour	0
AV55	HEAT INTG	Heat Integral	Per Hour	0
AV56	START_H2O_EVAL	Offset Temp to Start H2O Evaluat	Degrees F	10
AV57	ROOM CO2	Room CO2 Level	Parts per Million	0
BV1	BV_1	Binary Value #1		Inactive
BV2	BV_2	Binary Value #2		Inactive
BV3	BV_3	Binary Value #3		Inactive
BV4	COND_OVERFLO	Condensate Overflow		Inactive
BV5	OCC_SCHEDULE	Occupy Schedule		Inactive
BV6	MOTION	Motion Detected		Active
BV7	DAT_SENSOR	DAT Sensor Present		Inactive
BV8	MODE	Heat or Cool Mode		Active
BV9	FAN_NEED	Call for Fan		Inactive
BV10	COOL_HEAT_NEED	Cooling or Heating Needed?		Active
BV11	SPEED_UP	Speed Up Timers X 15		Inactive
BV12	BV_12	Binary Value #12		Inactive
BV13	OCCUPIED_FAN	Fan On During Occupied Mode		Inactive
BV14	FAN_STATUS	Fan Proof		Inactive
BV15	BV_15	Binary Value #15		Inactive
BV19	VLV_ACTION	Normal Close/Normal Open		Inactive
BV20	COOL_STG_1	Cooling Stage 1		Inactive
BV21	BV_21	Binary Value #21		Inactive
BV22	HEAT_STG_1	Heating Stage 1		Inactive
BV23	BV_23	Binary Value #23		Inactive
BV28	LOCAL_OVRD	Local Override Mode		Inactive
BV29	BV_29	Binary Value #29		Inactive
BV33	STANDBY_ENABLE	Enable Standby Mode		Active
BV34	AUXILIARY HEAT	Auxiliary Heat		Inactive
BV35	WATER_EVAL	Water Ealuation Mode		Inactive
BV36	STPT_HOLD	Hold Temperature Setpoint		Inactive
BV37	BV_37	Binary Value #37		Inactive
BV40	ICO_FAN	Fan Icon		Inactive
BV41	ICO_FAN_LOW	Icon Fan Low Speed		Inactive
BV42	ICO_FAN_MEDIUM	Icon Fan Medium Speed		Inactive
BV43	ICO_FAN_HIGH	Icon Fan Auto		Inactive
BV44	ICO_FAN_AUTO	Icon Fan Auto		Inactive
BV45	ICO_OCCUPIED	Icon Occupied		Inactive
BV46	ICO_STANDBY	Icon Standby		Inactive
BV47	ICO_COOLING	Icon Cooling		Inactive
BV48	ICO_HEATING	Icon Heating		Inactive
BV49	ICO_AUTO_MODE	Icon Auto Mode		Inactive
BV50	ICO_OVERRIDE	Icon Override		Inactive
MSV1	OCCUPIED MODE	Occupied Mode	OCCUPIED	1

BAC-9301 2-PIPE FCU OBJECTS				
OBJECT	**NAME**	**DESCRIPTION**	**UNITS or STATE**	**DEFAULT**
			STANDBY	
			UNOCCUPIED	
MSV2	SYSTEM_MODE	Control Mode	OFF	2
			AUTO	
			COOL	
			HEAT	
MSV3	FAN_MODE	Fan Auto-Manual Mode	AUTO	1
			LOW	
			MED	
			HIGH	
MSV4	AVAILABLE_SPEEDS	Number of Fan Speeds Available	SINGLE SPEED	1
			TWO SPEED	
			THREE SPEED	
MSV9	WATER_TYPE	Water Supplied to FCU	CHILLED WATER	1
			HOT WATER	
			UNCONDITIONED	
MSV8	OCCUPIED STATE	Occupied State	OCCUPIED	1
			STANDBY	
			UNOCCUPIED	
			LOCAL OVERRIDE	
MSV10	WALL SENSOR	Wall Sensor Type	STE-9001 Temp	1
			STE-9021 Humidity	
			STE-9201 Motion	
			STE-9221 Humidity/Motion	
			STE-9301 CO2	
			STE-9321 Humidity/CO2	
			STE-9501 Motion/CO2	
			STE-9521 Humidity/Motion/CO2	
			STE-6014/7	
			STE-6010	
			None	

NOTE: As a best practice when doing custom configuration and programming, **avoid reusing objects for custom programs that are reserved for KMC default programs**. Create new objects for custom programming instead. This avoids having custom objects being overwritten in the future during events such as a firmware upgrade.

BAC-9301 4-PIPE FCU OBJECTS				
OBJECT	**NAME**	**DESCRIPTION**	**UNITS or STATE**	**DEFAULT**
Inputs				
AI1	SPACE SENSOR	Space Sensor	KMC Type II Deg F (10K)	
AI2	SPACE SETPOINT	Space Setpoint	TABLE_4	
AI3	DISCHARGE AIR	Discharge Air Temperature	KMC Type III Deg F (10K)	
AI4	OUTDOOR AIR	Outdoor Air Temp	KMC10K_Type_III	
AI5	HUMIDITY	Space Humidity	Humidity (0-100 % 0-5 v)	
AI7	AI_07	Analog Input #7	NONE	
AI8	AI_08	Analog Input #8	NONE	
BI6	FAN	Fan	NONE	
Outputs				
AO7	ANALOG_COOLING	Analog Cooling Output	0-100% (0-10 V)	0
AO8	ANALOG_HEATING	Analog Heating Output	0-100% (0-10 V)	0
AO9	AO_09	Analog Output #9	NONE	0
AO10	ANALOG_FAN	Fan Speed Control	0-100% (0-10V)	0
BO1	LOW	Fan Low Speed	Unknown	Inactive
BO2	MEDIUM	Fan Medium Speed	Unknown	Inactive
BO3	HIGH	Fan High Speed	Unknown	Inactive
BO4	DIGITAL_COOLING	Cooling Valve	Unknown	Inactive
BO5	DIGITAL_HEATING	Heating Valve	Unknown	Inactive
BO6	BO_06	Binary Output #6	Unknown	Inactive
Values				
AV1	SPACE_TEMP	Space Temperature	Degrees F	0
AV2	STPT REFERENCE	Setpoint Reference	Degrees F	72
AV3	ACT_COOL_STPT	Active Cooling Setpoint	Degrees F	80
AV4	ACT_HEAT_STPT	Active Heating Setpoint	Degrees F	64
AV5	OCC_CL_STPT	Occupied Cooling Setpoint	Degrees F	74
AV6	OCC_HT_STPT	Occupied Heating Setpoint	Degrees F	70
AV7	UNOCC_CL_STPT	Unoccupied Cooling Setpoint	Degrees F	80
AV8	UNOCC_HT_STPT	Unoccupied Heating Setpoint	Degrees F	64
AV9	MIN_CL_STPT	Minimum Cooling Setpoint	Degrees F	68
AV10	MAX_HT_STPT	Maximum Heating Setpoint	Degrees F	76
AV11	MIN_STPT_DIFF	Minimum Setpoint Differential	Degrees F	2
AV12	STBY_OFFSET	Standby Offset	Degrees F	3
AV13	AV_13	Analog Value #13	No Units	0
AV19	OUTDOOR_TEMP	Outdoor Temperature	Degrees F	0
AV20	DISCHARGE_TEMP	Discharge Air Temp	Degrees F	0
AV21	REL_HUMIDITY	Relative Humidity	Relative Humidity	0
AV22	DEHUM_STPT	Dehumidification Setpoint	Percent	60
AV23	AV_23	Analog Value #23	No Units	0
AV24	DEHUM_DIFF	Dehumidification Differential	Percent	5
AV25	FAN_OFF_DELAY	Fan Off Delay	Minutes	2
AV26	AV_26	Analog Value #26	No Units	0
AV28	STANDBY_TIMER	Inactivity Timer	Minutes	20

NOTE: As a best practice when doing custom configuration and programming, **avoid reusing objects for custom programs that are reserved for KMC default programs**. Create new objects for custom programming instead. This avoids having custom objects being overwritten in the future during events such as a firmware upgrade.

BAC-9301 4-PIPE FCU OBJECTS				
OBJECT	**NAME**	**DESCRIPTION**	**UNITS or STATE**	**DEFAULT**
AV29	OCCUPANCY TRIGGE	Occupancy Trigger	Minutes	5
AV30	AV_30	Analog Value #30	No Units	0
AV34	FAN_SPEED	Fan Speed	Percent	0
AV35	FAN_MAXIMUM	Fan Maximum Speed	Percent	100
AV36	FAN_MINIMUM	Fan Minimum Speed	Percent	35
AV37	AV_37	Analog Value #37	No Units	0
AV38	OVRD_TIME	Local Override Timer	Minutes	60
AV39	AV_39	Analog Value #39	No Units	0
AV51	APP_ID	Application Identification	No Units	0
AV52	COOL PROP	Cooling Proportional Band	Degrees F	2
AV53	HEAT PROP	Heating Proportional Band	Degrees F	2
AV54	COOL INTG	Cool Integral	Per Hour	0
AV55	HEAT INTG	Heat Integral	Per Hour	0
AV56	AV_56	Analog Value #56	No Units	0
AV57	ROOM CO2	Room CO2 Level	Parts per Million	0
BV1	BV_1	Binary Value #1		Inactive
BV2	BV_2	Binary Value #2		Inactive
BV3	BV_3	Binary Value #3		Inactive
BV4	COND_OVERFLO	Condensate Overflow		Inactive
BV5	OCC_SCHEDULE	Occupy Schedule		Inactive
BV6	MOTION	Motion Detected		Active
BV7	DAT_SENSOR	DAT Sensor Present		Inactive
BV8	MODE	Heat or Cool Mode		Active
BV9	FAN_NEED	Call for Fan		Inactive
BV10	COOL_HEAT_NEED	Cooling or Heating Needed?		Active
BV11	SPEED_UP	Speed Up Timers X 15		Inactive
BV12	BV_12	Binary Value #12		Inactive
BV13	OCCUPIED_FAN	Fan On During Occupied Mode		Inactive
BV14	FAN_STATUS	Fan Proof		Inactive
BV15	BV_15	Binary Value #15		Inactive
BV18	CL_VLV_ACTION	Normal Close/Normal Open		Inactive
BV19	HT_VLV_ACTION	Normal Close/Normal Open		Inactive
BV20	COOL_STG_1	Cooling Stage 1		Inactive
BV21	BV_21	Binary Value #21		Inactive
BV22	HEAT_STG_1	Heating Stage 1		Inactive
BV23	BV_23	Binary Value #23		Inactive
BV27	OAT_SENSOR	Outdoor Sensor Present?		Inactive
BV28	LOCAL_OVRD	Local Override Mode		Inactive
BV29	BV_29	Binary Value #29		Inactive
BV31	DEHUM_ENABLE	Enable Dehumidification		Inactive
BV32	DEHUM_MODE	Dehumidification Mode		Inactive
BV33	STANDBY_ENABLE	Enable Standby Mode		Active
BV34	BV_34	Binary Value #34		Inactive
BV36	STPT_HOLD	Hold Temperature Setpoint		Inactive

NOTE: As a best practice when doing custom configuration and programming, **avoid reusing objects for custom programs that are reserved for KMC default programs**. Create new objects for custom programming instead. This avoids having custom objects being overwritten in the future during events such as a firmware upgrade.

BAC-9301 4-PIPE FCU OBJECTS				
OBJECT	**NAME**	**DESCRIPTION**	**UNITS or STATE**	**DEFAULT**
BV37	BV_37	Binary Value #37		Inactive
BV40	ICO_FAN	Fan Icon		Inactive
BV41	ICO_FAN_LOW	Icon Fan Low Speed		Inactive
BV42	ICO_FAN_MEDIUM	Icon Fan Medium Speed		Inactive
BV43	ICO_FAN_HIGH	Icon Fan Auto		Inactive
BV44	ICO_FAN_AUTO	Icon Fan Auto		Inactive
BV45	ICO_OCCUPIED	Icon Occupied		Inactive
BV46	ICO_STANDBY	Icon Standby		Inactive
BV47	ICO_COOLING	Icon Cooling		Inactive
BV48	ICO_HEATING	Icon Heating		Inactive
BV49	ICO_AUTO_MODE	Icon Auto Mode		Inactive
BV50	ICO_OVERRIDE	Icon Override		Inactive
MSV1	OCCUPIED MODE	Occupied Mode	OCCUPIED	1
			STANDBY	
			UNOCCUPIED	
MSV2	SYSTEM_MODE	Control Mode	OFF	2
			AUTO	
			COOL	
			HEAT	
MSV3	FAN_MODE	Fan Auto-Manual Mode	AUTO	1
			LOW	
			MED	
			HIGH	
MSV4	AVAILABLE_SPEEDS	Number of Fan Speeds Available	SINGLE SPEED	1
			TWO SPEED	
			THREE SPEED	
MSV8	OCCUPIED STATE	Occupied State	OCCUPIED	1
			STANDBY	
			UNOCCUPIED	
			LOCAL OVERRIDE	
MSV10	WALL SENSOR	Wall Sensor Type	STE-9001 Temp	1
			STE-9021 Humidity	
			STE-9201 Motion	
			STE-9221 Humidity/Motion	
			STE-9301 CO2	
			STE-9321 Humidity/CO2	
			STE-9501 Motion/CO2	
			STE-9521 Humidity/Motion/CO2	
			STE-6014/7	
			STE-6010	
			None	

NOTE: As a best practice when doing custom configuration and programming, **avoid reusing objects for custom programs that are reserved for KMC default programs**. Create new objects for custom programming instead. This avoids having custom objects being overwritten in the future during events such as a firmware upgrade.

BAC-93X1 RTU OBJECTS				
OBJECT	**NAME**	**DESCRIPTION**	**UNITS or STATE**	**DEFAULT**
Inputs				
AI1	SPACE SENSOR	Space Sensor	KMC Type II Deg F (10K)	
AI2	SPACE SETPOINT	Space Setpoint	TABLE_4	
AI3	DISCHARGE AIR	Discharge Air Temperature	KMC Type III Deg F (10K)	
AI4	OUTDOOR AIR	Outdoor Air Temp	KMC10K_Type_III	
AI5	HUMIDITY	Space Humidity	Humidity (0-100 % 0-5 v)	
AI6	AI_06	Analog Input #6	NONE	
AI7	AI_07	Analog Input #7	NONE	
AI8	AI_08	Analog Input #8	NONE	
AI9*	DUCT	Duct Pressure	NONE	
Outputs				
AO7	COOLING_OUTPUT	Analog Cooling Output	0-100% (0-10 V)	0
AO8	HEATING_OUTPUT	Analog Heating Output	0-100% (0-10 V)	0
AO9	ECON_DAMPER	Economizer Output	0-100% (0-10 V)	0
AO10	FAN_SPEED	Analog Output #10	PSI (0-100 % 0-10 V)	Inactive
BO1	FAN	Fan Start - Stop	Unknown	Inactive
BO2	CL STAGE 1	Cool Stage 1	Unknown	Inactive
BO3	CL STAGE 2	Cool Stage 2	Unknown	Inactive
BO4	BO_04	Binary Output #04	Unknown	Inactive
BO5	HT STAGE 1	Heating Stage 1	Unknown	Inactive
BO6	HT STAGE 2	Heating Stage 2	Unknown	Inactive
Values				
AV1	SPACE_TEMP	Space Temperature	Degrees F	0
AV2	STPT REFERENCE	Setpoint Reference	Degrees F	72
AV3	ACT_COOL_STPT	Active Cooling Setpoint	Degrees F	74
AV4	ACT_HEAT_STPT	Active Heating Setpoint	Degrees F	70
AV5	OCC_CL_STPT	Occupied Cooling Setpoint	Degrees F	74
AV6	OCC_HT_STPT	Occupied Heating Setpoint	Degrees F	70
AV7	UNOCC_CL_STPT	Unoccupied Cooling Setpoint	Degrees F	80
AV8	UNOCC_HT_STPT	Unoccupied Heating Setpoint	Degrees F	64
AV9	MIN_CL_STPT	Minimum Cooling Setpoint	Degrees F	68
AV10	MAX_HT_STPT	Maximum Heating Setpoint	Degrees F	76
AV11	MIN_STPT_DIFF	Minimum Setpoint Differential	Degrees F	2
AV12	STBY_OFFSET	Standby Offset	Degrees F	3
AV13	DAT RESET	Discharge Air Temperature Setpoi	Degrees F	0
AV14	MIN DAT	Min Dishcharge Air Temp	Degrees F	55
AV15	MIN_ECON_DAMPER	Minimum Econ Damper	Percent	10
AV16	ECON_ENABLE_TEMP	Econimizer Enable Temperature	Degrees F	60
AV17	AV_17	Analog Value #17	No Units	0
AV19	OUTDOOR_TEMP	Outdoor Air Temperature	Degrees F	0
AV20	DISCHARGE_TEMP	Discharge Air Temp	Degrees F	0
AV21	REL_HUMIDITY	Relative Humidity	Percent	0
AV22	DEHUM_STPT	Dehumidification Setpoint	Percent	60
AV23	AV_23	Analog Value #23	No Units	0
AV24	DEHUM_DIFF	Dehumidification Differential	Percent	5
AV25	FAN_OFF_DELAY	Fan Off Delay	Minutes	2
AV26	MIN_ OFF_TIME	Equipment Delay	Minutes	5
AV27	STAGE_DELAY	Stage Delay	Minutes	10
AV28	STANDBY_TIMER	Inactivity Timer	Minutes	20
AV29	OCCUPANCY TRIGGE	Occupancy Trigger	Minutes	5
AV30	AV_30	Analog Value #30	No Units	0
AV33	AV_33	Analog Value #33	No Units	0
AV34	AV_34	Analog Value #34	No Units	0
AV35	FAN_MAXIMUM	Fan Maximum Speed	Percent	90
AV36	FAN_MINIMUM	Fan Minimum Speed	Percent	30
AV37	AV_37	Analog Value #37	No Units	0

BAC-93X1 RTU OBJECTS				
OBJECT	**NAME**	**DESCRIPTION**	**UNITS or STATE**	**DEFAULT**
AV38	OVRD_TIME	Local Override Timer	Minutes	60
AV39	AV_39	Analog Value #39	No Units	0
AV51	APP_ID	Application Identification	No Units	0
AV52	COOL PROP	Cooling Proportional Band	Degrees F	2
AV53	HEAT PROP	Heating Proportional Band	Degrees F	2
AV54	COOL INTG	Cool Intergral	Per Hour	0
AV55	HEAT INTG	Heat Intergral	Per Hour	0
AV56	AV_56	Analog Value #56	No Units	0
AV57	ROOM CO2	Room CO2 Level	Parts per Million	0
AV58	CO2_RANGE	CO2 Range (above setpoint)	Parts per Million	200
AV59	CO2_SETPOINT	CO2 Setpoint	Parts per Million	800
BV1	BV_1	Binary Value #1		Inactive
BV2	BV_2	Binary Value #2		Inactive
BV3	BV_3	Binary Value #3		Inactive
BV4	BV_4	Binary Value #4		Inactive
BV5	OCC_SCHEDULE	Occupy Schedule		Inactive
BV6	MOTION	Motion Detected		Active
BV7	DAT_SENSOR	DAT Sensor Present		Inactive
BV8	MODE	Heat or Cool Mode		Active
BV9	FAN_NEED	Call for Fan		Inactive
BV10	COOL_HEAT_NEED	Cooling or Heating Needed?		Active
BV11	SPEED_UP	Speed Up Timers X 15		Inactive
BV12	HEATING_FAN	Fan Acitve In Heat		Active
BV13	OCCUPIED_FAN	Fan On During Occupied Mode		Inactive
BV14	FAN_STATUS	Fan Proof		Inactive
BV15	BV_15	Binary Value#15		Inactive
BV16	ECON_ENABLE	Econimizer		Inactive
BV17	ECON_MODE	Start Stop Econimizer		Inactive
BV18	CL_VLV_ACTION	Normal Close/Normal Open		Inactive
BV19	HT_VLV_ACTION	Normal Close/Normal Open		Inactive
BV20	COOL_STG_1	Cooling Stage 1		Inactive
BV21	COOL_STG_2	Cooling Stage 2		Inactive
BV22	HEAT_STG_1	Heating Stage 1		Inactive
BV23	HEAT_STG_2	Heating Stage 2		Inactive
BV24	BV_24	Binary Value #24		Inactive
BV27	OAT_SENSOR	Outdoor Sensor Present?		Inactive
BV28	LOCAL_OVRD	Local Override Mode		Inactive
BV29	CO2 VENT ENABLE	Enable/Disable CO2 Ventilation		Inactive
BV31	DEHUM_ENABLE	Enable Dehumidification		Inactive
BV32	DEHUM_MODE	Dehumidification Mode		Inactive
BV33	STANDBY_ENABLE	Enable Standby Mode		Active
BV34	BV_34	Binary Value #34		Inactive
BV36	STPT_HOLD	Hold Temperature Setpoint		Inactive
BV37	BV_37	Binary Value #37		Inactive
BV40	ICO_FAN	Fan Icon		Inactive
BV41	ICO_FAN_LOW	Icon Fan Low Speed		Inactive
BV42	ICO_FAN_MEDIUM	Icon Fan Medium Speed		Inactive
BV43	ICO_FAN_HIGH	Icon Fan Auto		Inactive
BV44	ICO_FAN_AUTO	Icon Fan Auto		Inactive
BV45	ICO_OCCUPIED	Icon Occupied		Inactive
BV46	ICO_STANDBY	Icon Standby		Inactive
BV47	ICO_COOLING	Icon Cooling		Inactive

BAC-93X1 RTU OBJECTS				
OBJECT	**NAME**	**DESCRIPTION**	**UNITS or STATE**	**DEFAULT**
BV48	ICO_HEATING	Icon Heating		Inactive
BV49	ICO_AUTO_MODE	Icon Auto Mode		Inactive
BV50	ICO_OVERRIDE	Icon Override		Inactive
MSV1	OCCUPIED MODE	Occupied Mode	OCCUPIED	1
			STANDBY	
			UNOCCUPIED	
MSV2	SYSTEM_MODE	Control Mode	OFF	2
			AUTO	
			COOL	
			HEAT	
MSV3	FAN_MODE	Fan Auto-Manual Mode	AUTO	1
			ON	
MSV8	OCCUPIED STATE	Occupied State	OCCUPIED	1
			STANDBY	
			UNOCCUPIED	
			LOCAL OVERRIDE	
MSV10	WALL SENSOR	Wall Sensor Type	STE-9001 Temp	1
			STE-9021 Humidity	
			STE-9201 Motion	
			STE-9221 Humidity/Motion	
			STE-9301 CO2	
			STE-9321 Humidity/CO2	
			STE-9501 Motion/CO2	
			STE-9521 Humidity/Mo-tion/CO2	
			STE-6014/7	
			STE-6010	
			None	

***NOTE:** **AI9** is for the **optional** air pressure sensor (in the BAC-9311). All models of the BAC-9300 series have **8 standard** inputs—2 analog for the temp. sensor port and 6 universal inputs (software configurable as analog, binary, or accumulator on terminals).

NOTE: As a best practice when doing custom configuration and programming, **avoid reusing objects for custom programs that are reserved for KMC default programs**. Create new objects for custom programming instead. This avoids having custom objects being overwritten in the future during events such as a firmware upgrade.

BAC-93X1 HPU OBJECTS				
OBJECT	**NAME**	**DESCRIPTION**	**UNITS or STATE**	**DEFAULT**
Inputs				
AI1	SPACE SENSOR	Space Sensor	KMC Type II Deg F (10K)	
AI2	SPACE SETPOINT	Space Setpoint	TABLE_4	
AI3	DISCHARGE AIR	Discharge Air Temperature	KMC Type III Deg F (10K)	
AI4	OUTDOOR AIR	Outdoor Air Temp	KMC10K_Type_III	
AI5	HUMIDITY	Space Humidity	Humidity (0-100 % 0-5 v)	
AI7	AI_07	Analog Input #7	NONE	
AI8	AI_08	Analog Input #8	NONE	
AI9*	DUCT	Duct Pressure	NONE	
BI6	FAN_ST	Fan	NONE	
Outputs				
AO7	AO_07	Analog Output #7	no sensor	0
AO8	AO_08	Analog Output #8	no sensor	0
AO9	ECON_DAMPER	Economizer Output	0-100% (0-10 V)	0
AO10	AO_10	Analog Output #10	no sensor	0
BO1	FAN	Fan Start - Stop	Unknown	Inactive
BO2	COMPRESSOR_1	Stage 1 Compressor	Unknown	Inactive
BO3	COMPRESSOR_2	Stage 2 Compressor	Unknown	Inactive
BO4	REVERSING _VALVE	Reversing Valve	Unknown	Inactive
BO5	AUXILIARY_HEAT	Auxiliary Heat	Unknown	Inactive
BO6	BO_06	Binary Output #6	no sensor	Inactive
Values				
AV1	SPACE_TEMP	Space Temperature	Degrees F	0
AV2	STPT REFERENCE	Setpoint Reference	Degrees F	72
AV3	ACT_COOL_STPT	Active Cooling Setpoint	Degrees F	80
AV4	ACT_HEAT_STPT	Active Heating Setpoint	Degrees F	64
AV5	OCC_CL_STPT	Occupied Cooling Setpoint	Degrees F	74
AV6	OCC_HT_STPT	Occupied Heating Setpoint	Degrees F	70
AV7	UNOCC_CL_STPT	Unoccupied Cooling Setpoint	Degrees F	80
AV8	UNOCC_HT_STPT	Unoccupied Heating Setpoint	Degrees F	64
AV9	MIN_CL_STPT	Minimum Cooling Setpoint	Degrees F	68
AV10	MAX_HT_STPT	Maximum Heating Setpoint	Degrees F	76
AV11	MIN_STPT_DIFF	Minimum Setpoint Differential	Degrees F	2
AV12	STBY_OFFSET	Standby Offset	Degrees F	3
AV13	DAT_RESET	Discharge Air Reset STPT	Degrees F	0
AV14	MIN DAT	Min Discharge Air Temp	Degrees F	55
AV15	MIN_ECON_DAMPER	Minimum Econ Damper	Percent	10
AV16	ECON_ENABLE_TEMP	Economizer Enable Temperature	Degrees F	60
AV17	CMP_LOCKOUT	Compressor Lockout Temperature	Degrees F	25
AV18	AUX_HT_LOCKOUT	OAT AUX Heat Lockout	Degrees F	60
AV19	OUTDOOR_TEMP	Outdoor Air Temperature	Degrees F	0
AV20	DISCHARGE_TEMP	Discharge Air Temp	Degrees F	0
AV21	REL_HUMIDITY	Relative Humidity	Relative Humidity	0
AV22	DEHUM_STPT	Dehumidification Setpoint	Percent	60
AV23	AV_23	Analog Value #23	No Units	5
AV24	DEHUM_DIFF	Dehumidification Differential	Percent	5
AV25	FAN_OFF_DELAY	Fan Off Delay	Minutes	2
AV26	MIN_ OFF_TIME	Equipment Delay	Minutes	5
AV27	STAGE_DELAY	Stage Delay	Minutes	10
AV28	STANDBY_TIMER	Inactivity Timer	Minutes	20
AV29	OCCUPANCY TRIGGE	Occupancy Trigger	Minutes	5

NOTE: As a best practice when doing custom configuration and programming, **avoid reusing objects for custom programs that are reserved for KMC default programs**. Create new objects for custom programming instead. This avoids having custom objects being overwritten in the future during events such as a firmware upgrade.

BAC-93X1 HPU OBJECTS				
OBJECT	**NAME**	**DESCRIPTION**	**UNITS or STATE**	**DEFAULT**
AV30	AV_30	Analog Value #30	No Units	0
AV38	OVRD_TIME	Local Override Timer	Minutes	60
AV39	AV_39	Analog Value #39	No Units	0
AV51	APP_ID	Application Identification	No Units	0
AV52	COOL PROP	Cooling Proportional Band	Degrees F	2
AV53	HEAT PROP	Heating Proportional Band	Degrees F	2
AV54	COOL INTG	Cool Intergral	Per Hour	0
AV55	HEAT INTG	Heat Intergral	Per Hour	0
AV56	AV_56	Analog Value #56	No Units	0
AV57	ROOM CO2	Room CO2 Level	Parts per Million	0
AV58	CO2_RANGE	CO2 Range (above setpoint)	Parts per Million	200
AV59	CO2_SETPOINT	CO2 Setpoint	Parts per Million	800
BV1	BV_1	Binary Value #1		Inactive
BV2	BV_2	Binary Value #2		Inactive
BV3	BV_3	Binary Value #3		Inactive
BV4	BV_4	Binary Value #4		Inactive
BV5	OCC_SCHEDULE	Occupy Schedule		Inactive
BV6	MOTION	Motion Detected		Active
BV7	DAT_SENSOR	DAT Sensor Present		Inactive
BV8	MODE	Heat or Cool Mode		Active
BV9	FAN_NEED	Call for Fan		Inactive
BV10	COOL_HEAT_NEED	Cooling or Heating Needed?		Active
BV11	SPEED_UP	Speed Up Timers X 15		Inactive
BV12	BV_12	Binary Value #12		Inactive
BV13	OCCUPIED_FAN	Fan On During Occupied Mode		Inactive
BV14	FAN_STATUS	Fan Proof		Inactive
BV15	REV_VLV_POLARITY	Reversing Valve Action		Inactive
BV16	ECON_ENABLE	Economizer		Inactive
BV17	ECON_MODE	Start Stop Economizer		Inactive
BV18	BV_18	Binary Value #18		Inactive
BV20	COOL_STG_1	Cooling Stage 1		Inactive
BV21	COOL_STG_2	Cooling Stage 2		Inactive
BV22	HEAT_STG_1	Heating Stage 1		Inactive
BV23	HEAT_STG_2	Heating Stage 2		Inactive
BV24	AUX_HEAT_STG	Auxiliary Heat Stage		Inactive
BV25	AUX_LOCKOUT	Aux Heat Lockout		Inactive
BV26	COMP_LOCKOUT	Compressor Lockout		Inactive
BV27	OAT_SENSOR	Outdoor Sensor Present?		Inactive
BV28	LOCAL_OVRD	Local Override Mode		Inactive
BV29	CO2 VENT ENABLE	Enable/Disable CO2 Ventilation		Inactive
BV31	DEHUM_ENABLE	Enable Dehumidification		Inactive
BV32	DEHUM_MODE	Dehumidification Mode		Inactive
BV33	STANDBY_ENABLE	Enable Standby Mode		Active
BV34	BV_34	Binary Value #34		Inactive

NOTE: As a best practice when doing custom configuration and programming, **avoid reusing objects for custom programs that are reserved for KMC default programs**. Create new objects for custom programming instead. This avoids having custom objects being overwritten in the future during events such as a firmware upgrade.

BAC-93X1 HPU OBJECTS				
OBJECT	**NAME**	**DESCRIPTION**	**UNITS or STATE**	**DEFAULT**
BV36	STPT_HOLD	Hold Temperature Setpoint		Inactive
BV37	ENBL_CMP_LOCKOUT	Enable Compressor Lockout		Active
BV40	ICO_FAN	Fan Icon		Inactive
BV41	ICO_FAN_LOW	Icon Fan Low Speed		Inactive
BV42	ICO_FAN_MEDIUM	Icon Fan Medium Speed		Inactive
BV43	ICO_FAN_HIGH	Icon Fan Auto		Inactive
BV44	ICO_FAN_AUTO	Icon Fan Auto		Inactive
BV45	ICO_OCCUPIED	Icon Occupied		Inactive
BV46	ICO_STANDBY	Icon Standby		Inactive
BV47	ICO_COOLING	Icon Cooling		Inactive
BV48	ICO_HEATING	Icon Heating		Inactive
BV49	ICO_AUTO_MODE	Icon Auto Mode		Inactive
BV50	ICO_OVERRIDE	Icon Override		Inactive
MSV1	OCCUPIED MODE	Occupied Mode	OCCUPIED	1
			STANDBY	
			UNOCCUPIED	
MSV2	SYSTEM_MODE	Control Mode	OFF	2
			AUTO	
			COOL	
			HEAT	
			EMERGENCY_HEAT	
MSV3	FAN_MODE	Fan Auto-Manual Mode	AUTO	1
			ON	
MSV5	AUX_HEAT	Auxiliary Heat	None	1
			3rd Stage	
			Comp Lockout	
MSV8	OCCUPIED STATE	Occupied Mode	OCCUPIED	1
			STANDBY	
			UNOCCUPIED	
			LOCAL OVERRIDE	
MSV10	WALL SENSOR	Wall Sensor Type	STE-9001 Temp	1
			STE-9021 Humidity	
			STE-9201 Motion	
			STE-9221 Humidity/Motion	
			STE-9301 CO2	
			STE-9321 Humidity/CO2	
			STE-9501 Motion/CO2	
			STE-9521 Humidity/Motion/CO2	
			STE-6014/7	
			STE-6010	
			None	

***NOTE:** **AI9** is for the **optional** air pressure sensor (in the BAC-9311). All models of the BAC-9300 series have **8 standard** inputs—2 analog for the temp. sensor port and 6 universal inputs (software configurable as analog, binary, or accumulator on terminals).

NOTE: As a best practice when doing custom configuration and programming, **avoid reusing objects for custom programs that are reserved for KMC default programs**. Create new objects for custom programming instead. This avoids having custom objects being overwritten in the future during events such as a firmware upgrade.

BAC-9311 VAV WITH REMOTE ACTUATOR OBJECTS				
OBJECT	**NAME**	**DESCRIPTION**	**UNITS or STATE**	**DEFAULT**
Inputs				
AI1	SPACE SENSOR	Space Sensor	KMC Type II Deg F	
AI2	SPACE SETPOINT	Space Setpoint	Table 4	
AI3	DISCHARGE AIR	Discharge Air Temperature	KMC Type III Deg F	
AI8	PRIMARY POSITION	Primary Damper Position	0-12 Volts	
AI9*	PRIMARY DUCT	Primary Duct Pressure	NONE	
Outputs				
AO7	ANALOG HEAT	Analog Heat	0-100 % (0-10 V)	0
AO8	FAN SPEED	Fan Speed	0_100%	0
AO9	AO_09	Analog Output #9	NONE	0
BO1	FAN	Fan	Unknown	Inactive
BO2	HT STAGE 1	Heating Stage 1	Unknown	Inactive
BO3	HT STAGE 2	Heating Stage 2	Unknown	Inactive
BO4	HT STAGE 3	Heating Stage3	Unknown	Inactive
BO5	PRI DAMPER CW	Primary Damper Clockwise	Unknown	Inactive
BO6	PRI DAMPER CCW	Primary Damper Counter Clockwise	Unknown	Inactive
Values				
AV1	SPACE TEMP	Space Temperature	Degrees F	0
AV2	STPT REFERENCE	Setpoint Reference	Degrees F	72
AV3	ACT COOL STPT	Active Cooling Setpoint	Degrees F	74
AV4	ACT HEAT STPT	Active Heating Setpoint	Degrees F	70
AV5	OCC CL STPT	Occupied Cooling Setpoint	Degrees F	74
AV6	OCC HT STPT	Occupied Heating Setpoint	Degrees F	70
AV7	UNOCC CL STPT	Unoccupied Cooling Setpoint	Degrees F	80
AV8	UNOCC HT STPT	Unoccupied Heating Setpoint	Degrees F	64
AV9	MIN CL STPT	Minimum Cooling Setpoint	Degrees F	68
AV10	MAX HT STPT	Maximum Heating Setpoint	Degrees F	76
AV11	MIN STPT DIFF	Minimum Setpoint Differential	Degrees F	4
AV12	STBY_OFFSET	Standby Offset	Degrees F	3
AV13	MIN COOL FLOW	Minimum Cooling Flow	Cubic Feet per Minute	100
AV14	MAX COOL FLOW	Maximum Cooling Flow	Cubic Feet per Minute	400
AV15	MIN HEAT FLOW	Minimum Heating Flow	Cubic Feet per Minute	100
AV16	MAX HEAT FLOW	Maximum Heating Flow	Cubic Feet per Minute	400
AV17	AUXILLARY FLOW	Auxillary Flow	Cubic Feet per Minute	200
AV18	PRI K FACT	Primary K Factor	No Units	904
AV19	PRI CORR SLOPE	Primary Correction Slope	No Units	1
AV20	PRI CORR OFFST	Primary Correction Offset	Cubic Feet per Minute	0
AV21	PRI LO FLOW CORR	Primary Low Flow Correction	No Units	1
AV22	PRI FLOW STPT	Primary Flow Setpoint	Cubic Feet per Minute	0
AV23	PRI RAW FLOW	Primary Raw Flow	Cubic Feet per Minute	0
AV24	PRI ACTUAL FLOW	Primary Actual Flow	Cubic Feet per Minute	0
AV25	AV_25	Analog Value #25	No Units	0
AV32	MIN FAN SPEED	Minimum Fan Speed	Percent	25
AV33	MAX FAN SPEED	Maximum Fan Speed	Percent	100

NOTE: As a best practice when doing custom configuration and programming, **avoid reusing objects for custom programs that are reserved for KMC default programs**. Create new objects for custom programming instead. This avoids having custom objects being overwritten in the future during events such as a firmware upgrade.

BAC-9311 VAV WITH REMOTE ACTUATOR OBJECTS				
OBJECT	**NAME**	**DESCRIPTION**	**UNITS or STATE**	**DEFAULT**
AV34	AV_34	Analog Value #34	No Units	0
AV36	DAT STPT	Discharge Air Temp Setpoint	Degrees F	90
AV37	SAT CHANGEOVER	SAT Changeover Temperature	Degrees F	72
AV38	LOCAL OVRD TIME	Local Override Timer	Minutes	60
AV39	STANDBY TIMER	Standby Timer (motion)	Minutes	15
AV40	OCCUPANCY TRIGGE	Occupancy Trigger	Minutes	5
AV41	REL_HUMIDITY	Relative Humidity	Relative Humidity	0
AV43	MEASURED MAX	Measured Maximum	Cubic Feet per Minute	0
AV44	MEASURED MIN	Measured Minimum	Cubic Feet per Minute	0
AV45	PRI SAVE MIN FLO	Primary Saved Minimum Airflow	Cubic Feet per Minute	0
AV46	AV_46	Analog Value #46	No Units	0
AV47	DAT MAXIMUM	Maximum DAT Setpoint	Degrees F	90
AV48	CCW DMP POS	CCW Damper Position	Volts	0
AV49	CW DMP POS	CW Damper Position	Volts	0.01
AV50	DAMPER POSITION	Damper Position	Percent	0
AV51	APP_ID	Application Identification	No Units	0
AV55	CHNG OVER DELAY	Heating Change Over Delay	Minutes	3
AV56	LOW AUTO OCC	Low Limit for Auto Occupy	Cubic Feet per Minute	50
AV57	ROOM CO2	Room CO2 Level	Parts per Million	0
BV1	NEED AHU	Needl For AHU		Inactive
BV2	NEED COLDER SPLY	Need For Colder Air Supply		Inactive
BV3	NEED MORE STATIC	Need For More Static Pressure		Inactive
BV4	LOCAL OVRD	Local Override Mode		Inactive
BV5	MOTION OVRD	Motion Override Mode		Inactive
BV6	MOTION SENSOR	Motion Sensor (Wall Stat)		Inactive
BV7	NEED HOTTER SPLY	Need For Hotter Air Supply		Inactive
BV8	SUPPLY AIR TYPE	Supply Air Type		Active
BV9	DAT LIMITING	Discharge Air Temp Limiting		Inactive
BV10	DIRECTION-CLOSE	Clockwise Close		Inactive
BV11	AUTO OCCUPANCY	Auto Occupancy Detection		Inactive
BV12	BALANCE MODE	Balance Mode		Inactive
BV13	DAT SENSOR	DAT Sensor Present		Inactive
BV14	PRI BAL TRIGGER	Primary Balance Trigger		Inactive
BV15	BV_15	Binary Value #15		Inactive
BV40	ICO_FAN	Fan Icon		Inactive
BV41	ICO_FAN_LOW	Icon Fan Low Speed		Inactive
BV42	ICO_FAN_MEDIUM	Icon Fan Medium Speed		Inactive
BV43	ICO_FAN_HIGH	Icon Fan Auto		Inactive
BV44	ICO_FAN_AUTO	Icon Fan Auto		Inactive
BV45	ICO_OCCUPIED	Icon Occupied		Inactive
BV46	ICO_STANDBY	Icon Standby		Inactive
BV47	ICO_COOLING	Icon Cooling		Inactive
BV48	ICO_HEATING	Icon Heating		Inactive
BV49	ICO_AUTO_MODE	Icon Auto Mode		Inactive
BV50	ICO_OVERRIDE	Icon Override		Inactive

NOTE: As a best practice when doing custom configuration and programming, **avoid reusing objects for custom programs that are reserved for KMC default programs**. Create new objects for custom programming instead. This avoids having custom objects being overwritten in the future during events such as a firmware upgrade.

BAC-9311 VAV WITH REMOTE ACTUATOR OBJECTS				
OBJECT	**NAME**	**DESCRIPTION**	**UNITS or STATE**	**DEFAULT**
MSV1	OCCUPIED MODE	Occupied Mode	OCCUPIED	1
			STANDBY	
			UNOCCUPIED	
			LOCAL OVERRIDE	
			MOTION OVERRIDE	
MSV2	FAN CONFIG	Fantype Configuration	NONE	1
			SERIES	
			PARALLEL	
MSV3	REHEAT	Reheat Type	NONE	1
			STAGED	
			MODULATING	
			FLOATING	
			TIME PROP	
MSV8	OCCUPIED STATE	Occupied State	OCCUPIED	1
			STANDBY	
			UNOCCUPIED	
			LOCAL OVERRIDE	
MSV6	WALL SENSOR	Wall Sensor Type	STE-9001 Temp	1
			STE-9021 Humidity	
			STE-9201 Motion	
			STE-9221 Humidity/Motion	
			STE-9301 CO2	
			STE-9321 Humidity/CO2	
			STE-9501 Motion/CO2	
			STE-9521 Humidity/Motion/CO2	
			STE-6014/7	
			STE-6010	
			None	

***NOTE:** **AI9** is for the **optional** air pressure sensor (in the BAC-9311). All models of the BAC-9300 series have **8 standard** inputs—2 analog for the temp. sensor port and 6 universal inputs (software configurable as analog, binary, or accumulator on terminals).

NOTE: As a best practice when doing custom configuration and programming, **avoid reusing objects for custom programs that are reserved for KMC default programs**. Create new objects for custom programming instead. This avoids having custom objects being overwritten in the future during events such as a firmware upgrade.

APPENDIX: K FACTORS FOR VAV

To properly set up a VAV controller, the correct K factor for the VAV box must be entered into the controller. Typically, this is part of the airflow chart that the manufacturer places on the VAV unit. If this information is missing and not available from the manufacturer, use a generic K factor from the following chart as an approximate value.

DUCT SIZE (INCHES)	K FACTOR	
	CFM	LPS
4 (Round)	265	8
5	357	11
6	460	14
7	652	19
8	890	27
9	1145	34
10	1443	43
12	1972	59
14	2771	86
16	3741	111
24 x 16 (Rectangular)	6980	208

INDEX

Symbols

0–12 VDC
  Inputs *13*
  Outputs *14*
2-Pipe FCU *92*
2-Pipe vs. 4-Pipe FCU *52*
4–20 mA
  Inputs *14*
  Output Override Boards *17*
4-Pipe FCU *95*
10K and 1K Ohm *13*

A

Abbreviations, NetSensor Screen *28*
Accessories *4*
Active Inputs *13*
Actuator, Remote for VAV *19*
AC vs. DC Power *24*
Adapter, HPO-9005 Room Sensor *12*
ADVC *28*
AHU (Air Handling Unit) *63*
AI (Analog Inputs) *10*, *13*
Airflow
  Balancing *33*, *79*
  Setpoints Sequence *76*
  Troubleshooting Issues *41*
Analog
  Inputs (AI) *13*
  Outputs (AO) *14*, *35*, *40*
  Sensors (STE-6000) *12*
Application, Selecting *31*
AUMD *28*
AUX *28*
AUXH *28*
Auxiliary and Emergency Heat *62*
AXLK *28*

B

BAC-7xxx Cross-Reference *45*
BAC-58xx Cross-Reference *45*
BAC-5051E Router *21*, *36*
BAC-5900 Series General Purpose *16*
BAC-9000 Series VAV Controller *32*, *41*, *70*, *83*
BAC-9300 Series Unitary Controller *46*, *47*, *55*, *63*, *70*, *92*, *98*, *101*
BAC-9311
  Connecting Remote Actuator *19*
  VAV Objects *104*
BACnet IP *22*
BACnet Objects *81*
Balancing VAV Airflow *32*, *79*
BAUD *28*
Binary
  Inputs (BI) *13*
  Outputs (BO) *14*
BLNC *28*

C

Calibration *12*, *32*, *39*
CAN-5900 Series Expansion Modules *8*, *16*, *37*
Cautions *6*
CAV (Constant Air Volume) *46*
Changeover *50*, *58*, *66*, *76*
CHNG *28*
CMLK *28*
CNFG *28*
CO2 Sensor *11*, *28*, *38*
Cold Start *35*
COMM *28*
Communication Issues *36*
Configuration *25*, *27*
Connect *42*
Connections
  Ethernet *9*
  Ethernet Network *22*
  Inputs *9*
  MS/TP Network *20*
  Output Override Boards *14*
  Outputs *14*
  Power *23*
  Room Sensor Port *9*
  Switched Common *14*
Connect Lite (App) *25*
Connect (Software) *25*
Control Basic Programs *43*
Controller Cross-References *45*
Converge (Niagara) *25*
Cooling/Heating Changeover *50*, *58*, *66*, *76*
Cross-References *45*
CVA *28*

D

DAEN *28*
Daisy-Chaining Ethernet *22*
Damper Operation *78*
DAT (Discharge Air Temperature) *51*, *59*, *67*, *76*
Date and Time *43*
DCV (Demand Control Ventilation) *11*, *28*, *38*
DC vs. AC Power *24*
DDIR *28*
Defaults, Factory *31*
DEHU *28*
Dehumidification *50*, *58*, *66*
Delay, Fan *35*
Designing Web Graphics *25*
DHDF *29*
Diagnostics, VAV System *80*
D ID *29*
DIFF *29*
Digital. See Binary *13*, *14*

Digital Sensor. *See* NetSensor
DMIN *29*
Dual Duct *79*

E

Economizer *61*, *69*
EETM *29*
EIO (Expansion Input Output) *8*
Electric Heating (Two-Pipe Option) *53*
ELOC *29*
Emergency and Auxiliary Heat *62*
ENDH *29*
ENEC *29*
English Units *31*
ENST *29*
EOL (End of Line) *21*
EQDY *29*
ESD (Electrostatic Static Discharge) *6*
Ethernet *9*, *22*
EVAL *29*

F

Factory Defaults *31*, *35*
Fan
  Control *61*, *69*
  Delay *35*
  Icons *27*
  Operation *53*, *78*
  Speed *27*, *53*
  Status *51*, *59*, *67*
FCU (Fan Coil Unit)
  2-Pipe Objects *92*
  4-Pipe Objects *95*
  Sequences *47*
FNDY *29*
FNHT *29*
FNOC *29*
FNTP *29*
Fob, HPO-9003 NFC *25*, *26*, *37*
Foreign Device *22*
Four-Pipe vs. Two Pipe FCU *52*
FSPD *29*
Fuses (Network Bulbs) *37*

G

Ground
  Circuit *14*
  Earth *20*
  Versus Switched (Relay) Common *14*

H

Handling Precautions *6*
HAO (Hand-Off-Auto) *16*
HPO-0055 Isolation Bulbs *8*, *37*
HPO-0063 Output Override Jumper *18*
HPO-6700 Series Override Boards *18*
HPO-9003 NFC-Bluetooth/USB Module *25*, *26*, *37*
HPO-9005 Room Sensor Adapter *12*
HPO-9901 Kit *38*
HPU (Heat Pump Unit) *55*, *101*
HVA *29*

I

Icons *27*
Important Notices *6*
Inputs
  0–12 VDC *13*
  4–20 mA *14*
  Passive *13*, *14*
  Pulse *14*
  Troubleshooting *38*
  Universal *9*
Installation *4*, *9*
IP *22*
Isolation Bulbs (HPO-0055) *8*, *37*

J

Jumper *18*, *38*

K

K Factor *107*
KMC Connect *42*
KMD-11xx Cross-Reference *45*

L

LED Indicators *37*

M

MAC *29*
Maintenance *44*
MAX *29*
Menus *27*
Metric Units *31*
MIN *29*
Mixed Units *31*
MNCL *29*
MNDC *29*
MNDM *29*
MNFN *29*
MNHT *29*
Modes, Icons *27*
Modulating Heating and Cooling *52*, *68*, *77*
Motion Sensor *39*, *49*, *65*, *74*
MS/TP Network *20*
MXCL *29*
MXDT *29*
MXFN *30*
MXHT *30*

N

NetSensor
  Balancing VAV *32*
  CO2 Sensor *11*
  Cross-Reference *45*
  Mapping to Objects *10*
  Menus *27*
  Replacements *44*
  Room Sensor Port *9*
  Troubleshooting *41*
Network
  Ethernet *22*
  MS/TP *20*
NFC
  Controllers *26*
  Disabling/Enabling *26*
NFC (Near Field Communication) *25*, *26*, *36*
Niagara (Converge) *25*
Notices *6*

O

OAT (Outside Air Temperature) *59*, *67*
Objects, BACnet *81*
OCCL *30*
Occupancy Mode *27*, *49*, *57*, *65*, *74*
OCHT *30*
Offset, Setpoint *13*
Operation *5*
Outage, Power *35*
Outputs *35*
  4–20 mA *17*
  Analog (Universal) *40*
  Override Boards *16*
  Relay or Triac *40*
  Troubleshooting *40*
Override
  Occupancy *13*, *27*
  Output Boards *17*
OVRD *30*
OVRT *30*

P

Passive Inputs *13*, *14*
Passwords *26*, *42*
Phasing
  CAN Expansion Module *36*
  MS/TP *20*, *36*
  Power *41*
PID (Proportional Integral Derivative) Control Loops *51*, *59*, *67*, *75*
PKFT *30*
PMAX *30*
PMIN *30*
Ports *9*, *22*
Power
  Capacity and Phasing *41*
  Connecting to Controllers *23*
  Outage/Removal *35*
  Troubleshooting *38*
PRI *30*
Programming *25*
PSW *30*
Pulse Inputs *14*

R

Reheat *52*, *60*, *68*, *77*
Reinitialize *31*, *35*
Relays *17*
Remote Actuator *19*
Repeater *21*
Reset *31*, *35*
Restart *31*, *35*
Restore *31*
Reversing Valve *62*
RHTP *30*
Room Sensor. *See also* Sensors
Room Sensor Port *9*
Room Sensors (STE-xxxx) *10*
RSTR *30*, *31*
RTDs *13*
RTU (Roof Top Unit) *63*, *98*
RVA *30*

S

SAT (Supply Air Temperature) *76*
Schedules *43*, *50*, *58*, *66*, *75*
SC (Switched Common) *15*
SEC *30*
SENSORON *13*
Sensors
  Airflow *72*
  Cross-Reference *45*
  Motion *39*, *57*
  Mounting and Maintenance *4*
  Temperature *39*, *51*, *72*
Sequences of Operations
  AHU *63*
  CAV *46*
  FCU *47*
  HPU *55*
  RTU *63*
  VAV *70*
Setpoints
  Airflow Operation *76*
  Offset (AV2) *13*
  Room Temperature Operation *48*, *56*, *64*, *73*
  Troubleshooting *39*

SKFT *30*
SMAX *30*
SMIN *30*
Software *25*
Specifications *4*
S (Shield) Terminal *20*
Staged Heating and Cooling *60*, *68*, *78*
Standby *27*, *49*, *57*, *65*, *74*
Start (Reset), Cold or Warm *35*
Status *7*
STBO *30*
STBT *30*
STDY *30*
STE-6000 Series *12*
STE-9000 Series NetSensors. *See* NetSensor
STPT *30*
Submittal Sheets *5*
Support *6*
Surge Suppressor *21*
Switched (Relay) Commons *14*
Switches *21*
SYST *30*
System
  Diagnostics, VAV *80*
  Integration *81*
  Mode *50*, *58*, *66*

T

Temperature
  2-Pipe Water Supply Evaluation *52*
  Sensing *51*, *59*, *66*
  Troubleshooting *39*
Thermistor *12*
Time and Date *43*
Transformer, Power and Phasing *41*
Trends *43*
Triac *17*
Troubleshooting *36*
Two Pipe vs. Four Pipe FCU *52*

U

UNCL *30*
UNHT *30*
Units (English, Metric, or Mixed) *31*
Upgrade *44*

V

VA *30*
Valve Operation *52*
VAV (Variable Air Volume)
  Balancing *32*
  Cross-Reference *45*
  K Factor *107*
  Objects *104*
  Sequences *70*
  Troubleshooting *41*
Video Tutorials *5*

W

Warm Start *35*
Web Pages, User Interface and Configuration *22*, *25*, *43*
Wiring *20*
WorkBench, Converge for Niagara *25*
WST (Water Supply Temperature) Sensor *51*

WE VALUE YOUR FEEDBACK!

Help us improve this document.

Click here to take a 3-minute survey.

Your input helps us make our documents clearer and more useful.