United States Department of Agriculture
Forest Service

VIRGINIA
AUGUSTA COUNTY
(R08) SOUTHERN REGION
GEORGE WASHINGTON & JEFFERSON NATIONAL FORESTS
GLENWOOD AND PEDLAR RANGER DISTRICTS

SHERANDO LAKE RECREATION AREA WATER SYSTEM REPLACEMENT

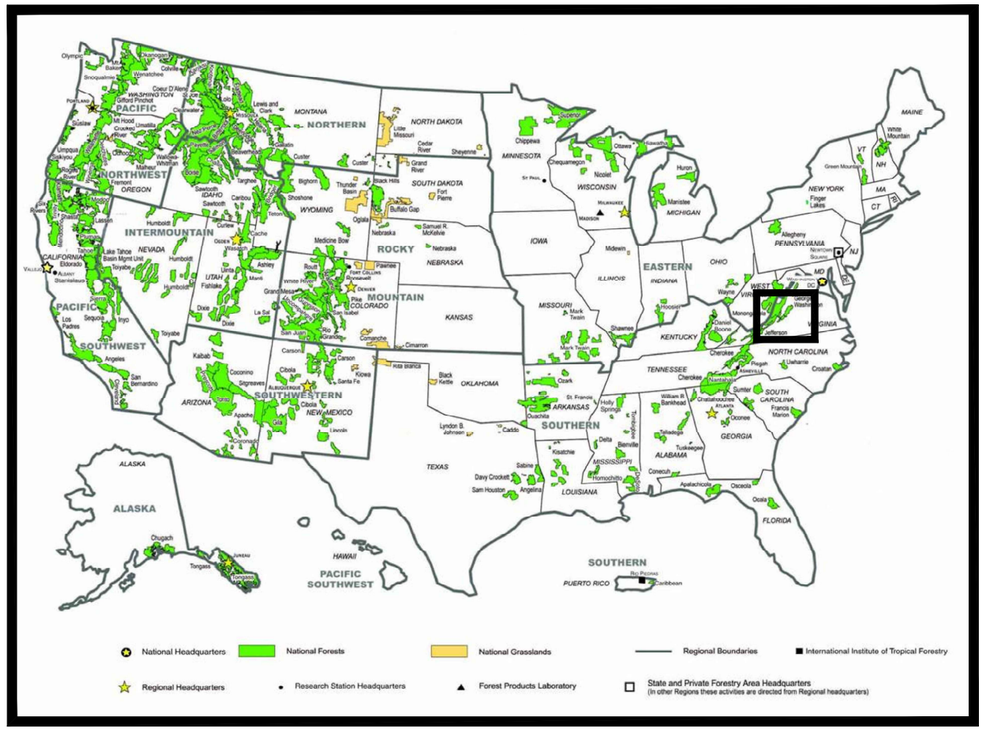

FOREST LOCATION

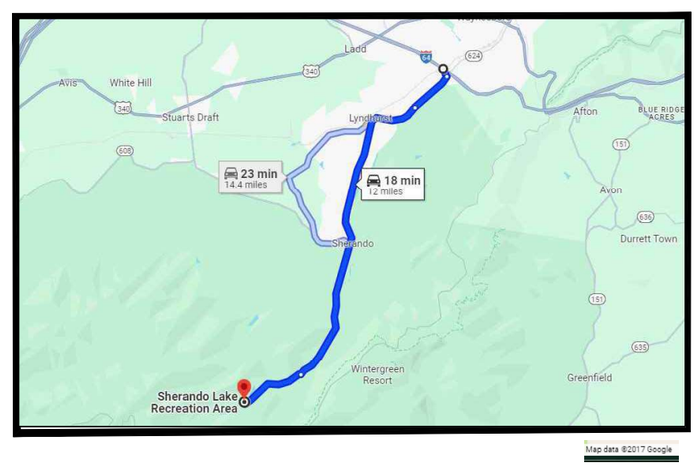

VICINITY MAP

TRAVEL DIRECTIONS:

The Sherando Lake Recreation Area is in the western portion on Virginia in the Blue Ridge mountains. From I-64: Take exit 96 just east of Stuarts Draft. Turn south onto State Route (SR) 624 and continue. At Lyndhurst the road changes to SR 664 (Mount Torrey Road), but there is no distinct turn. Continue south on SR 664 approximately 8 miles to the entrance to Sherando Lake Recreation Area on the right.

Sheet List Table

LAYOUT NUMBER	DRAWING TITLE	SHEET NUMBER
G-01	COVERSHEET	001
G-02	LEGEND AND ABBREVIATIONS	002
CU-01	SHERANDO RECREATION AREA EXISTING CONDITIONS OVERVIEW	003
CU-02	SHERANDO RECREATION AREA OVERVIEW 2	004
CU-03	WILLIAMS BRANCH & STORAGE TANK	005
CU-04	DAY USE PARKING AREA	006
CU-05	B LOOP	007
CU-06	C LOOP	008
CU-07	WAREHOUSE	009
CU-08	VOLUNTEER VILLAGE	010
CU-09	GROUP LOOP	011
CU-10	MAINLINE TO UPPER A LOOP	012
CU-11	UPPER A LOOP	013
CU-12	WILLIAMS BRANCH DAY USE	014
CU-13	DAY USE TO LOWER A LOOP	015
CU-14	LOWER A LOOP	016
CU-15	LOWER A LOOP & OFFICE LATERAL	017
CU-16	OFFICE AND LOWER A LOOP WELLHOUSE	018
CU-17	BEACH MAINLINE	019
CU-18	BEACH AREA	020
CU-19	POINT TABLES	021
D-01	PRESSURE REDUCING VALVE DETAIL	022
D-02	WATER HYDRANT DETAIL	023
D-03	RESERVOIR DETAIL	024
D-04	ARV AND PUMPOUT DRAIN DETAIL	025
D-05	LARGE UTILITY BOX DETAIL	026
D-06	INSULATED UTILITY BOX AND THRUST BLOCK DETAIL	027
D-07	DRAINLINE, TRENCH, VALVE BOX DETAIL	028
D-08	WATER TOWER FILL STATION	029
D-09	WELL HOUSE REPAIRS	030

RECOMMENDED BY:

BETH CHRISTENSEN Digitally signed by BETH CHRISTENSEN Date: 2026.05.19 12:53:23 -04'00'
ENGINEERING STAFF OFFICER (ACTING) — DATE

LAUREN STULL Digitally signed by LAUREN STULL Date: 2026.05.15 14:55:37 -04'00'
DISTRICT RANGER — DATE

JOBY TIMM Digitally signed by JOBY TIMM Date: 2026.05.19 15:34:08 -04'00'
FOREST SUPERVISOR — DATE

JOEL ORTIZ Digitally signed by JOEL ORTIZ Date: 2026.05.20 10:06:26 -04'00'
RO WATER AND WASTEWATER PROGRAM MANAGER — DATE

APPROVED:

JONATHAN HEYL Digitally signed by JONATHAN HEYL Date: 2026.05.20 09:53:39 -05'00'
DIRECTOR OF ENGINEERING — DATE

5/15/26 11:24 RORY.MULLENNEX C:\USERS\RORY.MULLENNEX\APPDATA\LOCAL\BOX\BOX EDIT\DOCUMENTS\YGU5PDSX\VE27SNVP\TTSMG==\SHERANDO WATER SYSTEM.DWG;

GENERAL NOTES:

1. NEW WATERLINE SHALL BE BURIED AT A MINIMUM OF 24 INCHES TO THE TOP OF THE PIPE FROM THE GROUND SURFACE EXCEPT FOR DRAIN PIPES. PLAN AND PROFILE SHEETS WERE DESIGNED TO MAINTAIN THIS MINIMUM AND NOT TO EXCEED 5 FEET DEPTH, IF POSSIBLE, WHICH WOULD REQUIRE SHORING. THE CONTRACTOR WITH APPROVAL FROM THE CONTRACTING OFFICER MAY ADJUST GRADES AS LONG AS THE 24-INCH MINIMUM BURIAL DEPTH IS MAINTAINED AND THE PIPE SLOPES TO DRAIN AT A MINIMUM OF 1%.

2. LOCATION AND ORIENTATION OF ALL STRUCTURES AND HYDRANTS SHALL BE APPROVED BY THE CONTRACTING OFFICER PRIOR TO INSTALLATION.

3. INSTALL THE WATER SYSTEM ACCORDING TO APPLICABLE FEDERAL, STATE, AND LOCAL REGULATIONS FOR PUBLIC DRINKING WATER SYSTEM.

4. THE MAXIMUM ALLOWABLE CLEARING WIDTH ALONG PIPING ALIGNMENTS SHALL BE 18 FEET (TOTAL), HOWEVER, THE CLEARED WIDTH SHALL BE MINIMIZED TO THE GREATEST EXTENT POSSIBLE. THE CONTRACTOR SHALL PRIORITIZE THE PRESERVATION OF TREES LARGER THAN 11" DBH TO THE GREATEST EXTENT POSSIBLE IN ALL LOCATIONS AND SHALL USE CAUTION AND AVOID DAMAGE TO ALL TREES AND VEGETATION. THE CONTRACTOR SHALL CONFINE ALL OPERATIONS AND ACTIVITIES TO WITHIN THE CLEARING LIMITS.

5. WATERLINES SHALL BE INSTALLED A MINIMUM OF 10 FEET FROM VAULT TOILETS AND SEPTIC TANKS.

6. ON LATERALS AND DRAIN LINES, INSTALL VALVES AND BOXES 2 FEET FROM THE TEE OR LINE TO BE DRAINED UNLESS DRAWINGS SPECIFY OTHERWISE.

7. VALVES TO BE SAME SIZE AS THE LINE THEY ARE INSTALLED ON UNLESS INDICATED OTHERWISE. ALL VALVES 2" AND SMALLER SHALL BE BALL VALVES AND ANYTHING LARGER THAN 2" SHALL BE GATE VALVES.

9. DRAINS SHALL BE PLACED IN THE LOWEST POINT OF THE PIPE IF THE LOW POINT DIFFERS FROM THE DESIGN DATA.

10. ALL STREAM BORINGS SHALL BE AT A MINIMUM 5 FEET BELOW THE LOWEST POINT OF THE STREAM AT ALL TIMES.

11. SUPPLY OR DISTRIBUTION PIPE SHALL BE BURIED A MINIMUM OF 36 INCHES BELOW THE ROAD SURFACE TO THE TOP OF THE PIPE. SUPPLY OR DISTRIBUTION PIPE SHALL BE PLACED INSIDE A STEEL CASING PIPE (SEE SPECIFICATIONS SECTION 221100) BENEATH ALL ASPHALT ROAD SURFACES; DEPTH TO TOP OF CASING PIPE SHALL BE 36 INCHES.

12. AN ATTEMPT HAS BEEN MADE TO ACCURATELY DEPICT ALL VALVES, DRAINS, HYDRANTS, AND MANHOLES. WHETHER THEY ARE SHOWN OR NOT SHOWN ON THE DRAWINGS, CONTRACTOR IS RESPONSIBLE FOR REMOVING ANY COMPONENTS OF THE EXISTING WATER SYSTEM THAT CONFLICT WITH INSTALLATION OF THE PROPOSED WATER SYSTEM AND FOR DEMOLISHING AND REMOVING ALL COMPONENTS OF THE EXISTING SYSTEM TO A MINIMUM DEPTH OF 1 FOOT BELOW THE SURFACE. COMPONENTS OF THE EXISTING WATER SYSTEM THAT DO NOT CONFLICT WITH THE PROPOSED SYSTEM SHALL BE CAPPED OR GROUTED ON EACH END AND ABANDONED IN-PLACE. BREAK OR PERFORATE THE BOTTOM OF STRUCTURES ABANDONED IN-PLACE TO PROVIDE DRAINAGE, AND FILL THE REMAINING STRUCTURE WITH AN OPEN-GRADED, SELF-COMPACTING AGGREGATE (SUCH AS #57) TO 1 FOOT BELOW THE SURFACE, AND MATCH THE SURROUNDING SURFACE IN THE REMAINING SPACE. SEVER ALL CONNECTIONS BETWEEN ANY PIPING OR COMPONENTS TO BE ABANDONED IN-PLACE AND THE PROPOSED WATER SYSTEM.

13. AN ATTEMPT HAS BEEN MADE TO LABEL ALL EXISTING UTILITIES, EXCEPT IN THE C-LOOP AREA. IT IS THE CONTRACTOR'S RESPONSIBILITY TO CONFIRM THE ACTUAL LOCATIONS OF ALL EXISTING UTILITIES PRIOR TO EXCAVATION. THE CONTRACTOR SHALL BE RESPONSIBLE FOR REPAIR IF UTILITIES SHOWN ON THE DRAWINGS BECOME DAMAGED. IF A UTILITY WAS NOT SHOWN ON THE DRAWINGS AND IT BECOMES DAMAGED, CONTRACTOR MAY SEEK REIMBURSEMENT FOR REPAIRING THE DAMAGED UTILITY. NOTE THAT NO INFORMATION HAS BEEN SHOWN FOR THE UTILITIES IN THE C-LOOP AREA; UTILITIES DO EXIST IN THE C-LOOP AREA AND IT SHALL BE THE RESPONSIBILITY OF THE CONTRACTOR TO LOCATE ALL UTILITIES IN THAT AREA.

14. THE PRECISE LOCATIONS OF EXISTING UTILITIES ARE NOT KNOWN AND HAND-EXCAVATION IS RECOMMENDED IN THE VICINITY OF ANY KNOWN OR SUSPECTED EXISTING UTILITY.

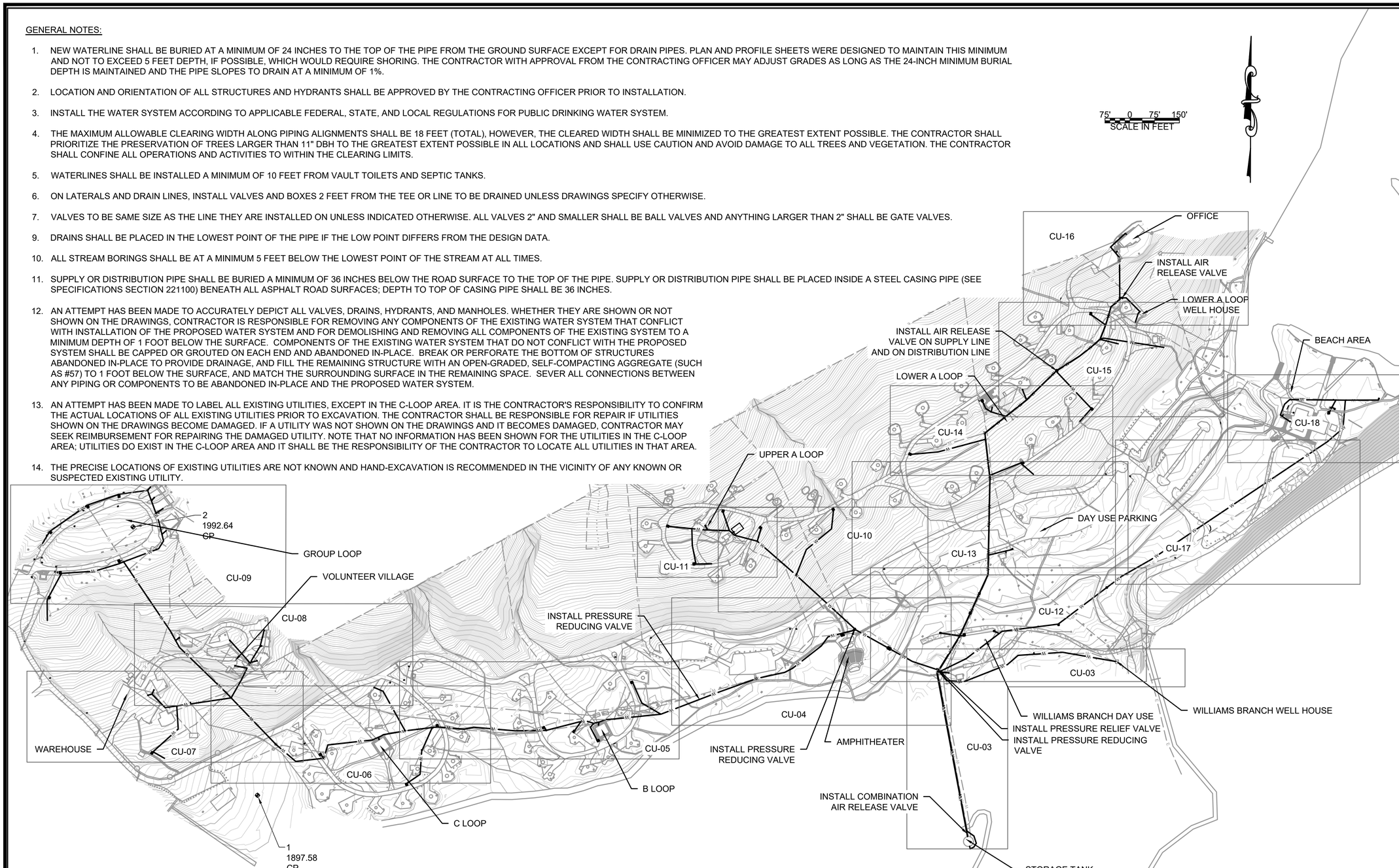

POINT TABLE

POINT #	NORTHING	EASTING
1	6653311.05	11334047.97
2	6654123.15	11333671.59

GENERAL SURVEY NOTES:

1. ALL SURVEYING WAS COMPLETE USING GNSS SURVEY EQUIPMENT AND ON NAD83 VIRGINIA STATE PLANE NORTH ZONE, U.S. SURVEY FOOT.

USDA FOREST SERVICE

United States Department of Agriculture
Forest Service

(R08)
SOUTHERN REGION

STAMPS, LOGOS, AND SEALS

NO.	REVISION / ISSUE	DATE
4		
3		
2		
1		

PROJECT NAME

SHERANDO RECREATION AREA WATER SYSTEM REPLACEMENT

GEORGE WASHINGTON & JEFFERSON NATIONAL FORESTS

GLENWOOD/PEDLAR RANGER DISTRICTS

DRAWING TITLE

SHERANDO RECREATION AREA EXISTING CONDITIONS OVERVIEW

DATE 11/19/2024
ARCHIVE NO. ---
DESIGNER A. FOX
DRAWN A. FOX
CHECKED D. KIMBALL
PROJECT NO.
DRAWING SHEET NO. CU-01
SHEET 003 OF 030

6/28/26 13:48 RORYMULLENNEX C:\USERS\RORYMULLENNEX\APPDATA\LOCALBOX\BOX EDIT\DOCUMENTS\HUYHZGLALEKQNSERPPDBW==\SHERANDO WATER SYSTEM.DWG;

GENERAL NOTES:

1. NEW WATERLINE SHALL BE BURIED AT A MINIMUM OF 24 INCHES TO THE TOP OF THE PIPE FROM THE GROUND SURFACE EXCEPT FOR DRAIN PIPES. PLAN AND PROFILE SHEETS WERE DESIGNED TO MAINTAIN THIS MINIMUM AND NOT TO EXCEED 5 FEET DEPTH, IF POSSIBLE, WHICH WOULD REQUIRE SHORING. THE CONTRACTOR WITH APPROVAL FROM THE CONTRACTING OFFICER MAY ADJUST GRADES AS LONG AS THE 24-INCH MINIMUM BURIAL DEPTH IS MAINTAINED AND THE PIPE SLOPES TO DRAIN AT A MINIMUM OF 1%.
2. LOCATION AND ORIENTATION OF ALL STRUCTURES AND HYDRANTS SHALL BE APPROVED BY THE CONTRACTING OFFICER PRIOR TO INSTALLATION.
3. INSTALL THE WATER SYSTEM ACCORDING TO APPLICABLE FEDERAL, STATE, AND LOCAL REGULATIONS FOR PUBLIC DRINKING WATER SYSTEM.
4. THE MAXIMUM ALLOWABLE CLEARING WIDTH ALONG PIPING ALIGNMENTS SHALL BE 18 FEET (TOTAL), HOWEVER, THE CLEARED WIDTH SHALL BE MINIMIZED TO THE GREATEST EXTENT POSSIBLE. THE CONTRACTOR SHALL PRIORITIZE THE PRESERVATION OF TREES LARGER THAN 11" DBH TO THE GREATEST EXTENT POSSIBLE IN ALL LOCATIONS AND SHALL USE CAUTION AND AVOID DAMAGE TO ALL TREES AND VEGETATION. THE CONTRACTOR SHALL CONFINE ALL OPERATIONS AND ACTIVITIES TO WITHIN THE CLEARING LIMITS.
5. WATERLINES SHALL BE INSTALLED A MINIMUM OF 10 FEET FROM VAULT TOILETS AND SEPTIC TANKS.
6. ON LATERALS AND DRAIN LINES, INSTALL VALVES AND BOXES 2 FEET FROM THE TEE OR LINE TO BE DRAINED UNLESS DRAWINGS SPECIFY OTHERWISE.
7. VALVES TO BE SAME SIZE AS THE LINE THEY ARE INSTALLED ON UNLESS INDICATED OTHERWISE. ALL VALVES 2" AND SMALLER SHALL BE BALL VALVES AND ANYTHING LARGER THAN 2" SHALL BE GATE VALVES.
9. DRAINS SHALL BE PLACED IN THE LOWEST POINT OF THE PIPE IF THE LOW POINT DIFFERS FROM THE DESIGN DATA.
10. ALL STREAM BORINGS SHALL BE AT A MINIMUM 5 FEET BELOW THE LOWEST POINT OF THE STREAM AT ALL TIMES.
11. SUPPLY OR DISTRIBUTION PIPE SHALL BE BURIED A MINIMUM OF 36 INCHES BELOW THE ROAD SURFACE TO THE TOP OF THE PIPE. SUPPLY OR DISTRIBUTION PIPE SHALL BE PLACED INSIDE A STEEL CASING PIPE (SEE SPECIFICATIONS SECTION 221100) BENEATH ALL ASPHALT ROAD SURFACES; DEPTH TO TOP OF CASING PIPE SHALL BE 36 INCHES.
12. AN ATTEMPT HAS BEEN MADE TO ACCURATELY DEPICT ALL VALVES, DRAINS, HYDRANTS, AND MANHOLES. WHETHER THEY ARE SHOWN OR NOT SHOWN ON THE DRAWINGS, CONTRACTOR IS RESPONSIBLE FOR REMOVING ANY COMPONENTS OF THE EXISTING WATER SYSTEM THAT CONFLICT WITH INSTALLATION OF THE PROPOSED WATER SYSTEM AND FOR DEMOLISHING AND REMOVING ALL COMPONENTS OF THE EXISTING SYSTEM TO A MINIMUM DEPTH OF 1 FOOT BELOW THE SURFACE. COMPONENTS OF THE EXISTING WATER SYSTEM THAT DO NOT CONFLICT WITH THE PROPOSED SYSTEM SHALL BE CAPPED OR GROUTED ON EACH END AND ABANDONED IN-PLACE. BREAK OR PERFORATE THE BOTTOM OF STRUCTURES ABANDONED IN-PLACE TO PROVIDE DRAINAGE, AND FILL THE REMAINING STRUCTURE WITH AN OPEN-GRADED, SELF-COMPACTING AGGREGATE (SUCH AS #57) TO 1 FOOT BELOW THE SURFACE, AND MATCH THE SURROUNDING SURFACE IN THE REMAINING SPACE. SEVER ALL CONNECTIONS BETWEEN ANY PIPING OR COMPONENTS TO BE ABANDONED IN-PLACE AND THE PROPOSED WATER SYSTEM.
13. AN ATTEMPT HAS BEEN MADE TO LABEL ALL EXISTING UTILITIES, EXCEPT IN THE C-LOOP AREA. IT IS THE CONTRACTOR'S RESPONSIBILITY TO CONFIRM THE ACTUAL LOCATIONS OF ALL EXISTING UTILITIES PRIOR TO EXCAVATION. THE CONTRACTOR SHALL BE RESPONSIBLE FOR REPAIR IF UTILITIES SHOWN ON THE DRAWINGS BECOME DAMAGED. IF A UTILITY WAS NOT SHOWN ON THE DRAWINGS AND IT BECOMES DAMAGED, CONTRACTOR MAY SEEK REIMBURSEMENT FOR REPAIRING THE DAMAGED UTILITY. NOTE THAT NO INFORMATION HAS BEEN SHOWN FOR THE UTILITIES IN THE C-LOOP AREA; UTILITIES DO EXIST IN THE C-LOOP AREA AND IT SHALL BE THE RESPONSIBILITY OF THE CONTRACTOR TO LOCATE ALL UTILITIES IN THAT AREA.
14. THE PRECISE LOCATIONS OF EXISTING UTILITIES ARE NOT KNOWN AND HAND-EXCAVATION IS RECOMMENDED IN THE VICINITY OF ANY KNOWN OR SUSPECTED EXISTING UTILITY.

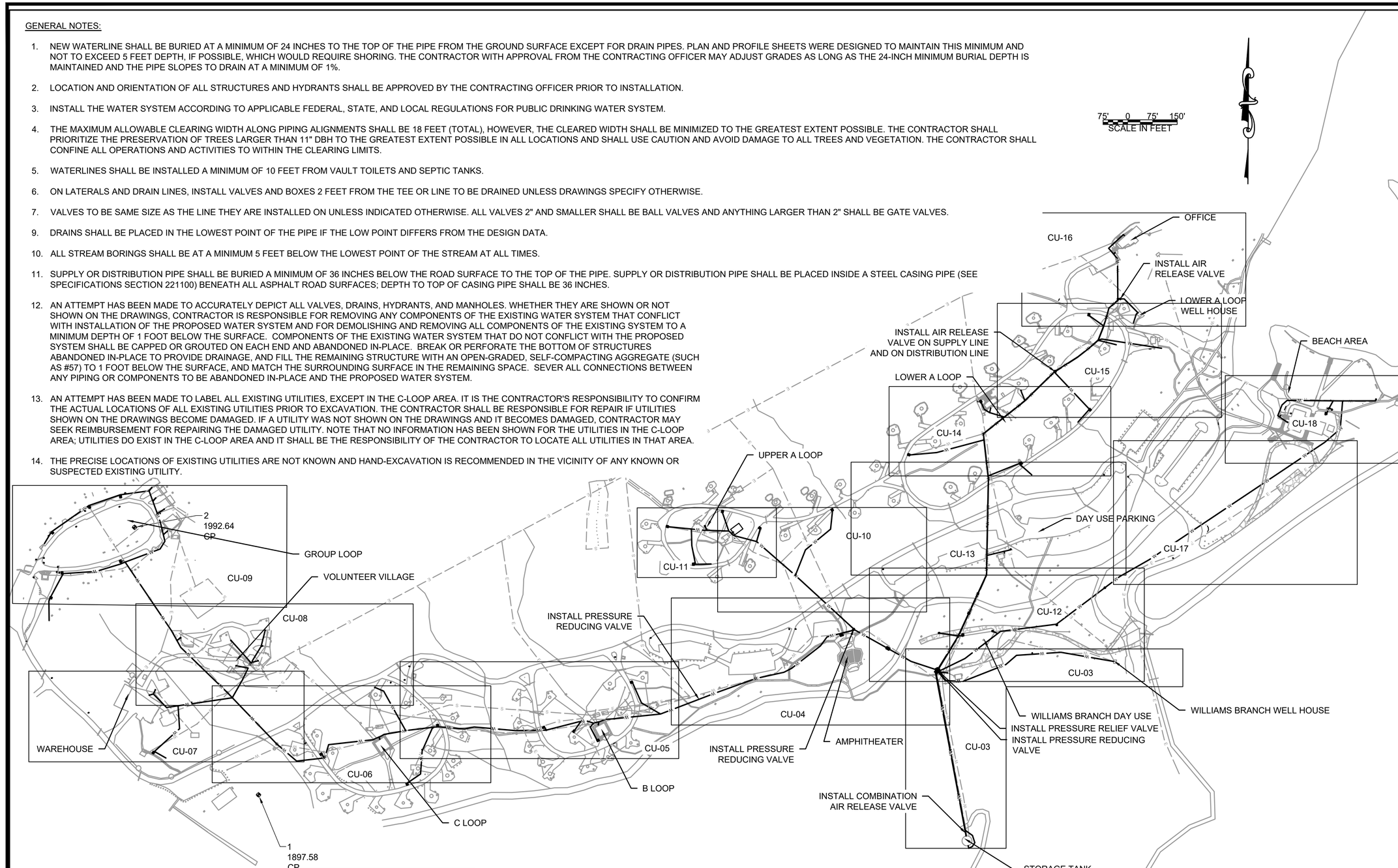

POINT TABLE

POINT #	NORTHING	EASTING
1	6653311.05	11334047.97
2	6654123.15	11333671.59

GENERAL SURVEY NOTES:

1. ALL SURVEYING WAS COMPLETE USING GNSS SURVEY EQUIPMENT AND ON NAD83 VIRGINIA STATE PLANE NORTH ZONE, U.S. SURVEY FOOT.

USDA FOREST SERVICE

United States Department of Agriculture
Forest Service

(R08)
SOUTHERN REGION

STAMPS, LOGOS, AND SEALS

NO.	REVISION / ISSUE	DATE
4		
3		
2		
1		

PROJECT NAME

SHERANDO RECREATION AREA WATER SYSTEM REPLACEMENT

GEORGE WASHINGTON & JEFFERSON NATIONAL FORESTS

GLENWOOD/PEDLAR RANGER DISTRICTS

DRAWING TITLE

SHERANDO RECREATION AREA OVERVIEW 2

DATE 11/19/2024
ARCHIVE NO.
DESIGNER A. FOX
DRAWN A. FOX
CHECKED D. KIMBALL
PROJECT NO.
DRAWING SHEET NO. **CU-02**
SHEET 004 OF 030

6/28/26 13:48 RORYMULLENNEX C:\USERS\RORYMULLENNEX\APPDATA\LOCAL\BOX\BOX EDIT\DOCUMENTS\HUVHZGLALEKQN3EPRPDDBW==\SHERANDO WATER SYSTEM.DWG;

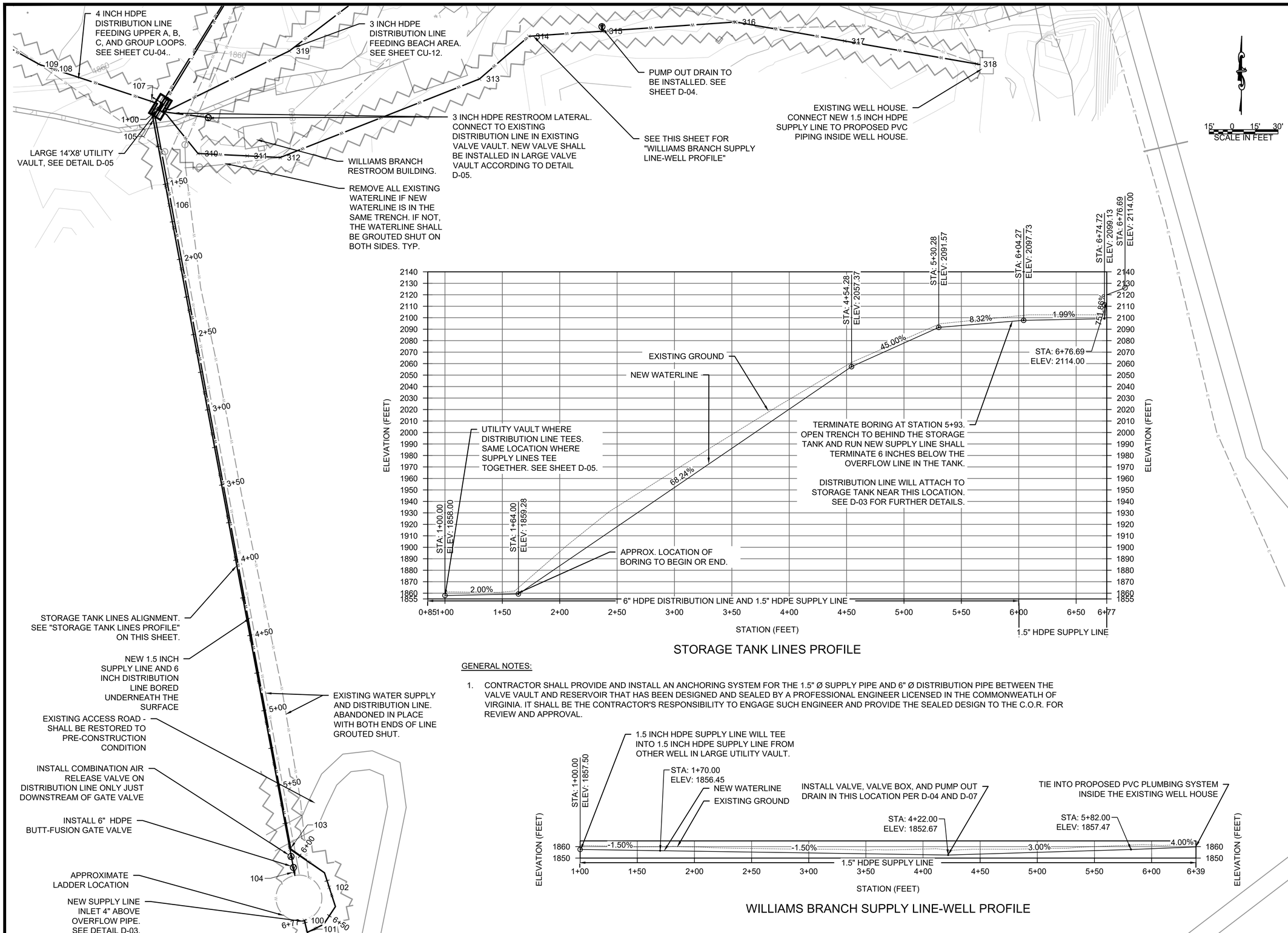

STORAGE TANK LINES PROFILE

GENERAL NOTES:

1. CONTRACTOR SHALL PROVIDE AND INSTALL AN ANCHORING SYSTEM FOR THE 1.5" Ø SUPPLY PIPE AND 6" Ø DISTRIBUTION PIPE BETWEEN THE VALVE VAULT AND RESERVOIR THAT HAS BEEN DESIGNED AND SEALED BY A PROFESSIONAL ENGINEER LICENSED IN THE COMMONWEATLH OF VIRGINIA. IT SHALL BE THE CONTRACTOR'S RESPONSIBILITY TO ENGAGE SUCH ENGINEER AND PROVIDE THE SEALED DESIGN TO THE C.O.R. FOR REVIEW AND APPROVAL.

WILLIAMS BRANCH SUPPLY LINE-WELL PROFILE

USDA FOREST SERVICE

United States Department of Agriculture
Forest Service

(R08)
SOUTHERN REGION

STAMPS, LOGOS, AND SEALS

NO.	REVISION / ISSUE	DATE
4		
3		
2		
1		

PROJECT NAME

SHERANDO RECREATION AREA WATER SYSTEM REPLACEMENT

GEORGE WASHINGTON & JEFFERSON NATIONAL FORESTS

GLENWOOD/PEDLAR RANGER DISTRICTS

DRAWING TITLE

WILLIAMS BRANCH & STORAGE TANK

DATE 11/19/2024	ARCHIVE NO.
DESIGNER A. FOX	DRAWING SHEET NO. CU-03
DRAWN A. FOX	
CHECKED D. KIMBALL	
PROJECT NO.	SHEET 005 OF 030

6/26/26 13:48 RORY.MULLENNEX C:\USERS\RORYMULLENNEX\APPDATA\LOCAL\BOX\BOX EDIT\DOCUMENTS\HUYHZGLALEKQN\SEPRPDDBW==\SHERANDO WATER SYSTEM.DWG;

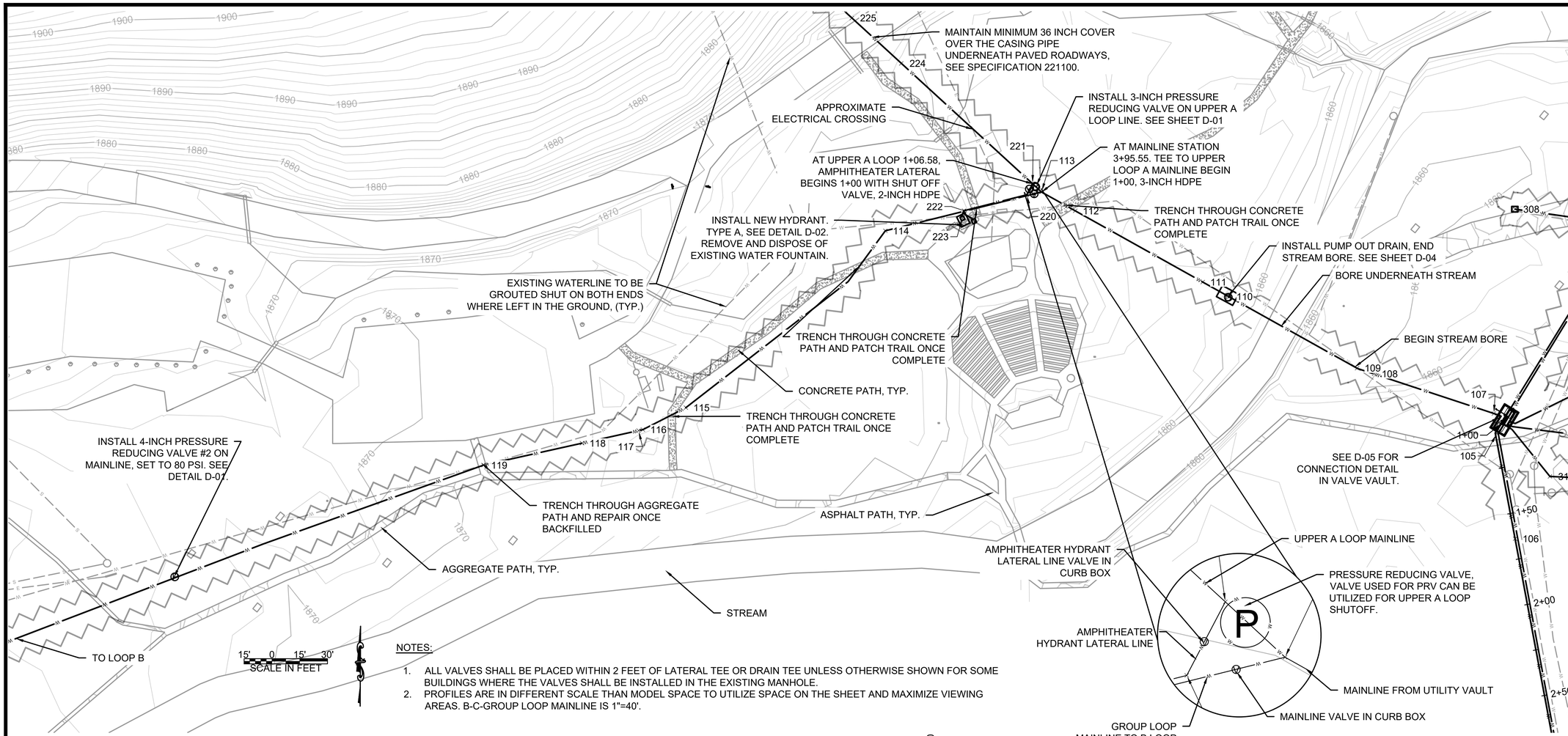

NOTES:

1. ALL VALVES SHALL BE PLACED WITHIN 2 FEET OF LATERAL TEE OR DRAIN TEE UNLESS OTHERWISE SHOWN FOR SOME BUILDINGS WHERE THE VALVES SHALL BE INSTALLED IN THE EXISTING MANHOLE.
2. PROFILES ARE IN DIFFERENT SCALE THAN MODEL SPACE TO UTILIZE SPACE ON THE SHEET AND MAXIMIZE VIEWING AREAS. B-C-GROUP LOOP MAINLINE IS 1"=40'.

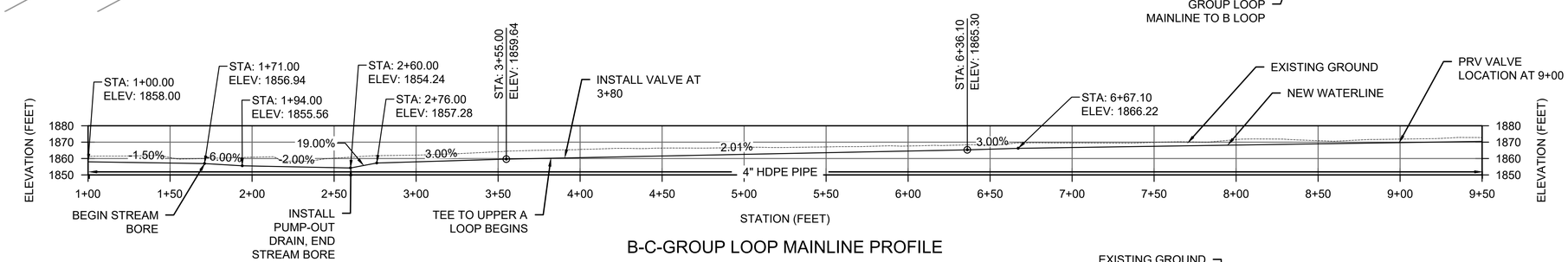

B-C-GROUP LOOP MAINLINE PROFILE

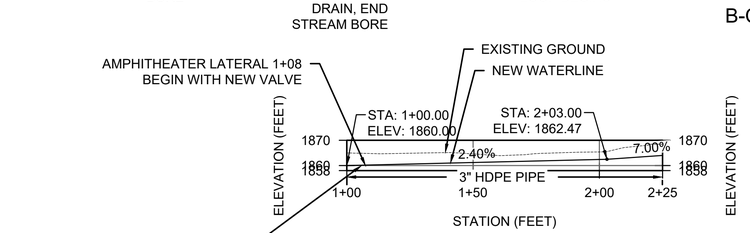

UPPER A LOOP MAINLINE PROFILE

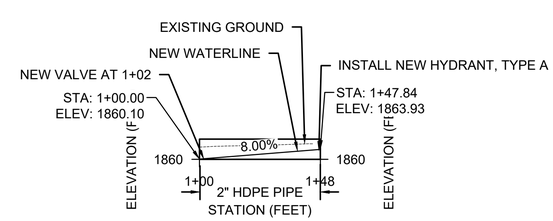

AMPHITHEATER HYDRANT & FOUNTAIN PROFILE

USDA FOREST SERVICE

United States Department of Agriculture
Forest Service

(R08)
SOUTHERN REGION

STAMPS, LOGOS, AND SEALS

NO.	REVISION / ISSUE	DATE
4		
3		
2		
1		

PROJECT NAME

SHERANDO RECREATION AREA WATER SYSTEM REPLACEMENT

GEORGE WASHINGTON & JEFFERSON NATIONAL FORESTS

GLENWOOD/PEDLAR RANGER DISTRICTS

DRAWING TITLE

DAY USE PARKING AREA

DATE 11/19/2024	ARCHIVE NO.
DESIGNER A. FOX	DRAWING SHEET NO. CU-04
DRAWN A. FOX	
CHECKED D. KIMBALL	
PROJECT NO.	SHEET 006 OF 030

6/28/26 13:48 RORYMULLENNEX C:\USERS\RORYMULLENNEX\APPDATA\LOCAL\BOX\BOX EDIT\DOCUMENTS\HUYHZGLALEKQN3EPRPDDBW==\SHERANDO WATER SYSTEM.DWG;

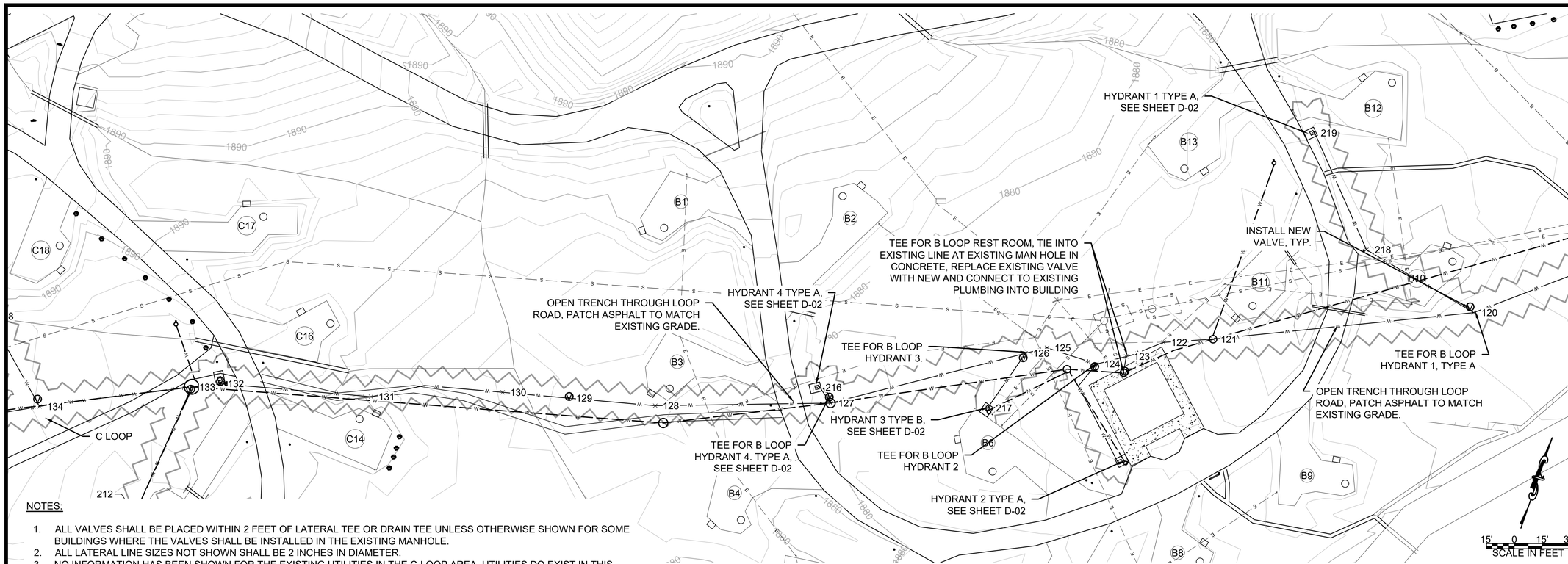

NOTES:

1. ALL VALVES SHALL BE PLACED WITHIN 2 FEET OF LATERAL TEE OR DRAIN TEE UNLESS OTHERWISE SHOWN FOR SOME BUILDINGS WHERE THE VALVES SHALL BE INSTALLED IN THE EXISTING MANHOLE.
2. ALL LATERAL LINE SIZES NOT SHOWN SHALL BE 2 INCHES IN DIAMETER.
3. NO INFORMATION HAS BEEN SHOWN FOR THE EXISTING UTILITIES IN THE C-LOOP AREA. UTILITIES DO EXIST IN THIS AREA AND IT SHALL BE THE RESPONSIBILITY OF THE CONTRACTOR TO LOCATE ALL UTILITIES IN THIS AREA.

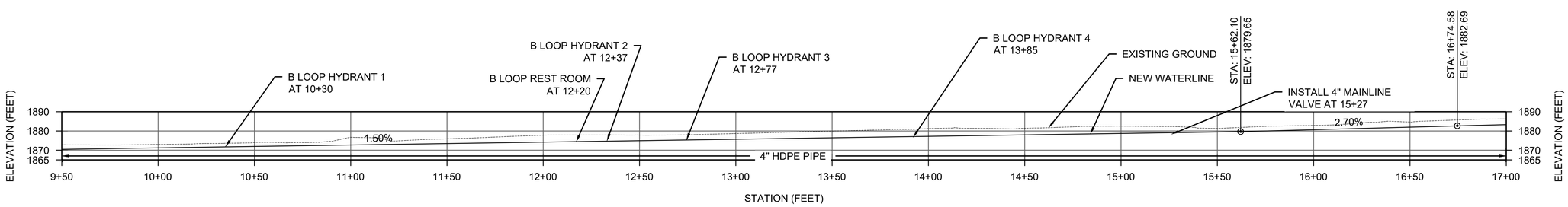

B-C-GROUP LOOP MAINLINE PROFILE

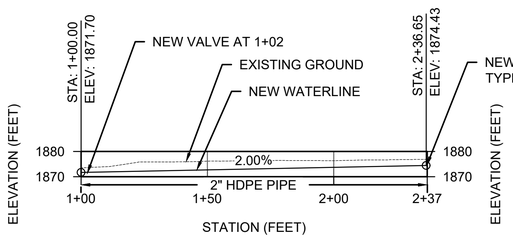

B LOOP HYDRANT 1 PROFILE

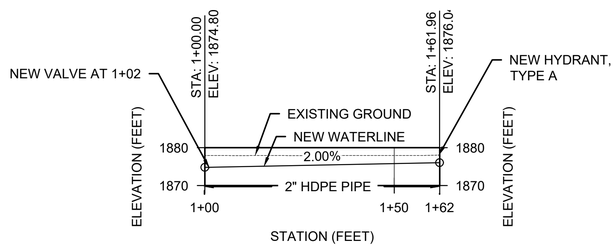

B LOOP HYDRANT 2 PROFILE

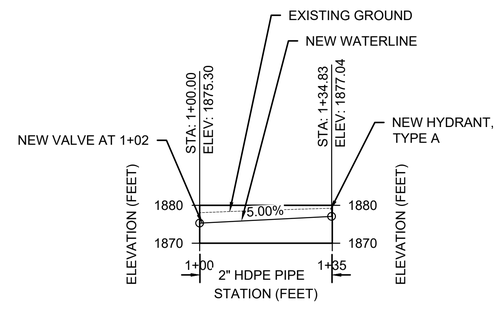

B LOOP HYDRANT 3 PROFILE

USDA FOREST SERVICE

United States Department of Agriculture
Forest Service

(R08)
SOUTHERN REGION

STAMPS, LOGOS, AND SEALS

NO.	REVISION / ISSUE	DATE
4		
3		
2		
1		

PROJECT NAME

SHERANDO RECREATION AREA WATER SYSTEM REPLACEMENT

GEORGE WASHINGTON & JEFFERSON NATIONAL FORESTS

GLENWOOD/PEDLAR RANGER DISTRICTS

DRAWING TITLE

B LOOP

DATE 11/19/2024	ARCHIVE NO.
DESIGNER A. FOX	DRAWING SHEET NO. CU-05
DRAWN A. FOX	
CHECKED D. KIMBALL	
PROJECT NO.	SHEET 007 OF 030

7/22/26 10:41 RORY.MULLENNEX C:\USERS\RORYMULLENNEX\ONEDRIVE - USDA\DOCUMENTS\RORY MULLENNEX\FACILITIES\GLENWOOD-PEDLAR\SHERANDO LAKE REC AREA\WATER SYSTEM\100% DRAFT\SHERANDO WATER SYSTEM G-01 - CU-19 07212026.DWG;

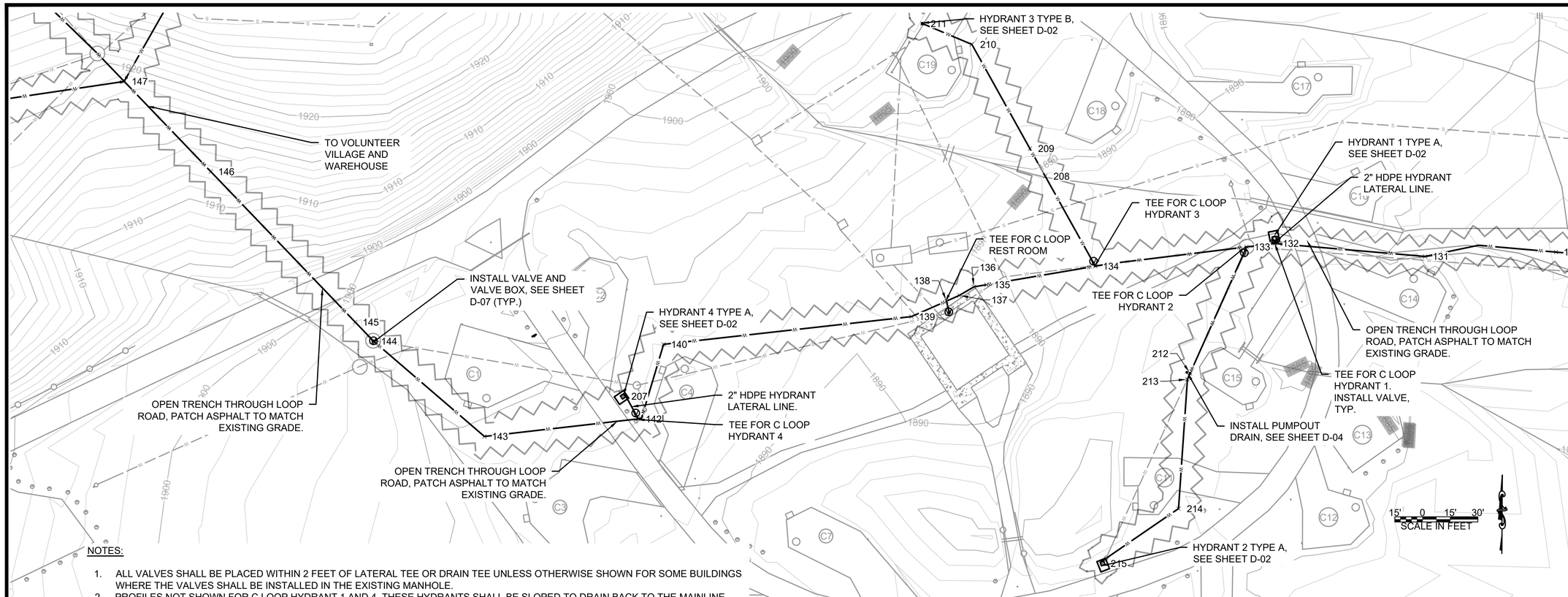

NOTES:

1. ALL VALVES SHALL BE PLACED WITHIN 2 FEET OF LATERAL TEE OR DRAIN TEE UNLESS OTHERWISE SHOWN FOR SOME BUILDINGS WHERE THE VALVES SHALL BE INSTALLED IN THE EXISTING MANHOLE.
2. PROFILES NOT SHOWN FOR C LOOP HYDRANT 1 AND 4. THESE HYDRANTS SHALL BE SLOPED TO DRAIN BACK TO THE MAINLINE.
3. ALL LATERAL LINE SIZES NOT SHOWN SHALL BE 2 INCHES IN DIAMETER.
4. NO INFORMATION HAS BEEN SHOWN FOR THE EXISTING UTILITIES IN THE C-LOOP AREA. UTILITIES DO EXIST IN THIS ARE AND IT SHALL BE THE RESPONSIBILITY OF THE CONTRACTOR TO LOCATE ALL UTILITIES IN THIS AREA.

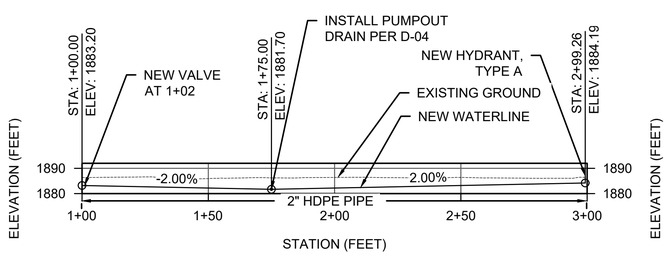

C LOOP HYDRANT 2 PROFILE

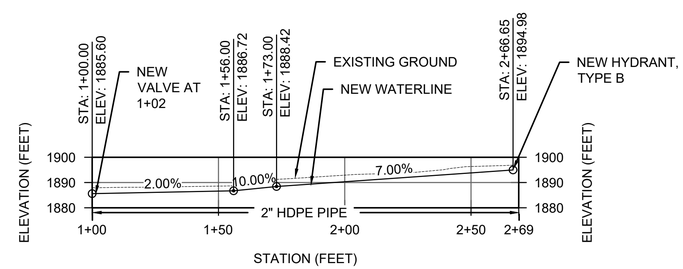

C LOOP HYDRANT 3 PROFILE

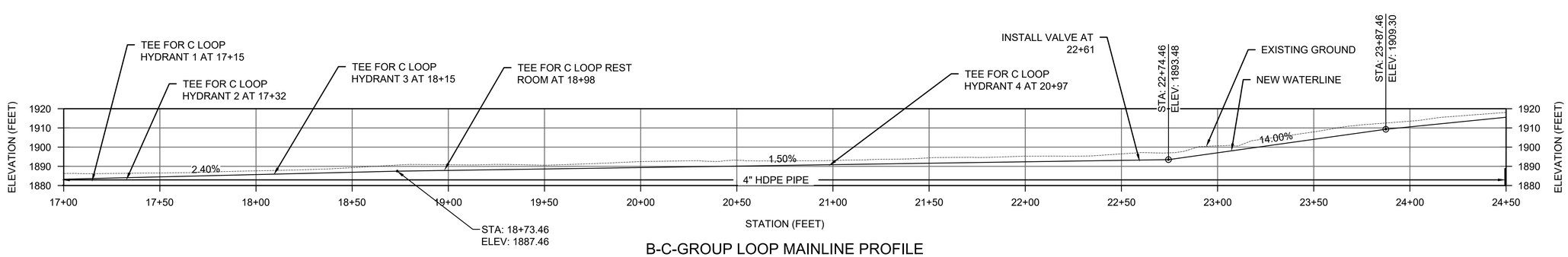

B-C-GROUP LOOP MAINLINE PROFILE

United States Department of Agriculture
Forest Service

(R08)
SOUTHERN REGION

STAMPS, LOGOS, AND SEALS

NO.	REVISION / ISSUE	DATE
4		
3		
2		
1		

PROJECT NAME

SHERANDO RECREATION AREA WATER SYSTEM REPLACEMENT

GEORGE WASHINGTON & JEFFERSON NATIONAL FORESTS

GLENWOOD/PEDLAR RANGER DISTRICTS

DRAWING TITLE

C LOOP

DATE 11/19/2024	ARCHIVE NO.
DESIGNER A. FOX	DRAWING SHEET NO. CU-06
DRAWN A. FOX	
CHECKED D. KIMBALL	
PROJECT NO.	SHEET 008 OF 030

6/28/26 13:48 RORYMULLENNEX C:\USERS\RORYMULLENNEX\APPDATA\LOCAL\BOX\BOX EDIT\DOCUMENTS\HUYHZGLALEKQN3EPRPDDBW==\SHERANDO WATER SYSTEM.DWG;

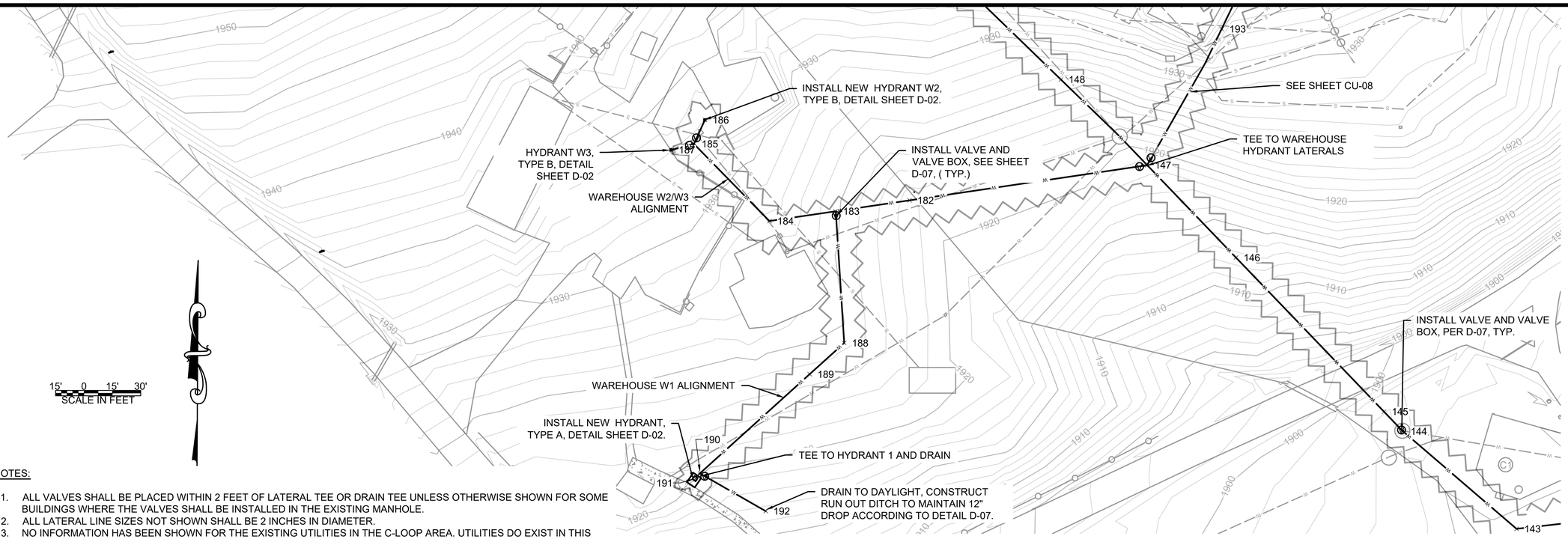

NOTES:

1. ALL VALVES SHALL BE PLACED WITHIN 2 FEET OF LATERAL TEE OR DRAIN TEE UNLESS OTHERWISE SHOWN FOR SOME BUILDINGS WHERE THE VALVES SHALL BE INSTALLED IN THE EXISTING MANHOLE.
2. ALL LATERAL LINE SIZES NOT SHOWN SHALL BE 2 INCHES IN DIAMETER.
3. NO INFORMATION HAS BEEN SHOWN FOR THE EXISTING UTILITIES IN THE C-LOOP AREA. UTILITIES DO EXIST IN THIS AREA AND IT SHALL BE THE RESPONSIBILITY OF THE CONTRACTOR TO LOCATE ALL UTILITIES IN THIS AREA.

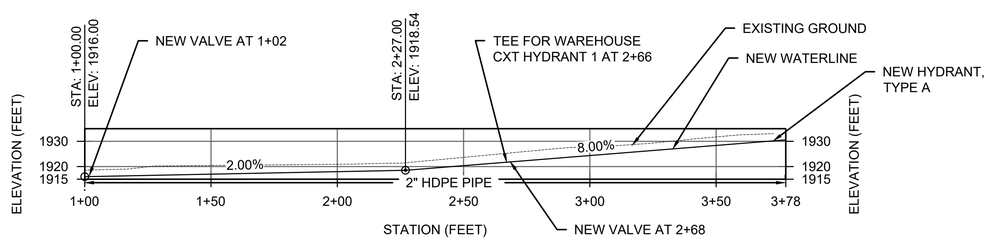

WAREHOUSE LATERAL W2-W3 PROFILE

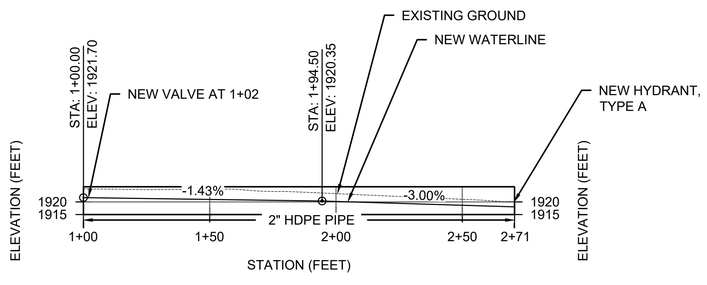

WAREHOUSE CXT LATERAL W1 PROFILE

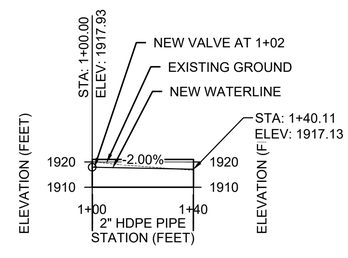

WAREHOUSE CXT LATERAL W1 DRAIN PROFILE

USDA FOREST SERVICE

United States Department of Agriculture
Forest Service

(R08)
SOUTHERN REGION

STAMPS, LOGOS, AND SEALS

NO.	REVISION / ISSUE	DATE
4		
3		
2		
1		

PROJECT NAME

SHERANDO RECREATION AREA WATER SYSTEM REPLACEMENT

GEORGE WASHINGTON & JEFFERSON NATIONAL FORESTS

GLENWOOD/PEDLAR RANGER DISTRICTS

DRAWING TITLE

WAREHOUSE

DATE 11/19/2024	ARCHIVE NO.
DESIGNER A. FOX	DRAWING SHEET NO. CU-07
DRAWN A. FOX	
CHECKED D. KIMBALL	
PROJECT NO.	SHEET 009 OF 030

6/28/26 13:48 RORYMULLENNEX C:\USERS\RORYMULLENNEX\APPDATA\LOCAL\BOX\BOX EDIT\DOCUMENTS\HUYHZGLALEKQN3EPRPDDBW==\SHERANDO WATER SYSTEM.DWG;

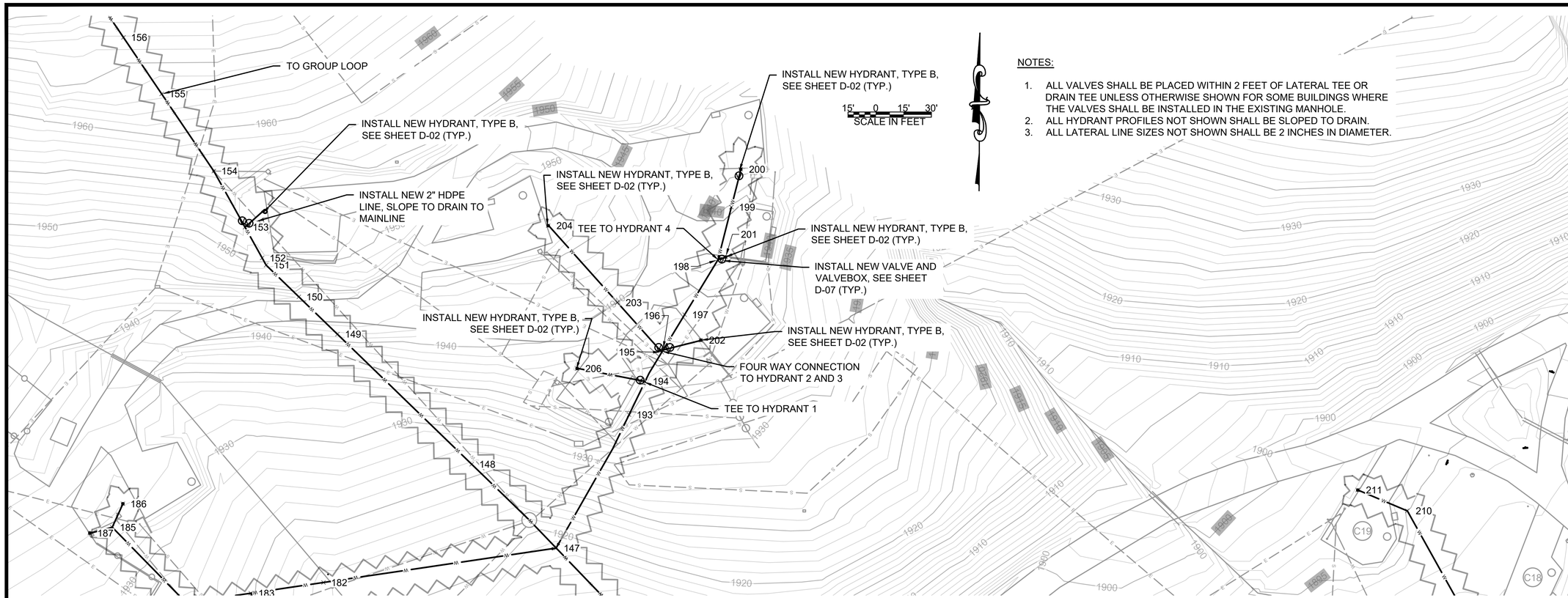

NOTES:

1. ALL VALVES SHALL BE PLACED WITHIN 2 FEET OF LATERAL TEE OR DRAIN TEE UNLESS OTHERWISE SHOWN FOR SOME BUILDINGS WHERE THE VALVES SHALL BE INSTALLED IN THE EXISTING MANHOLE.
2. ALL HYDRANT PROFILES NOT SHOWN SHALL BE SLOPED TO DRAIN.
3. ALL LATERAL LINE SIZES NOT SHOWN SHALL BE 2 INCHES IN DIAMETER.

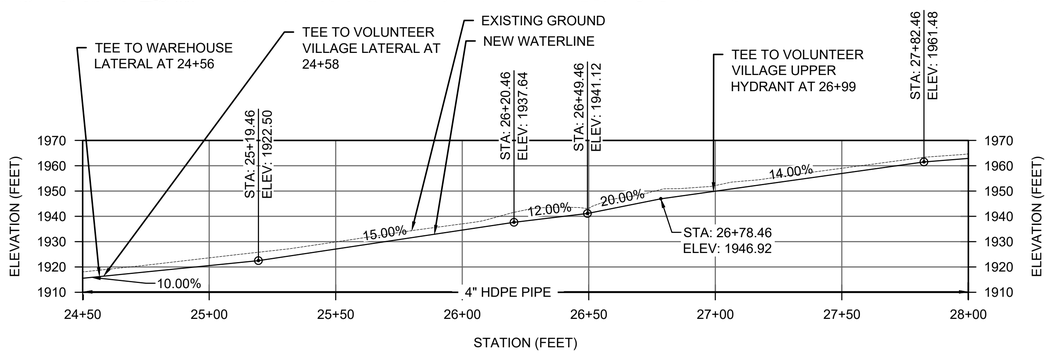

B-C-GROUP LOOP MAINLINE PROFILE

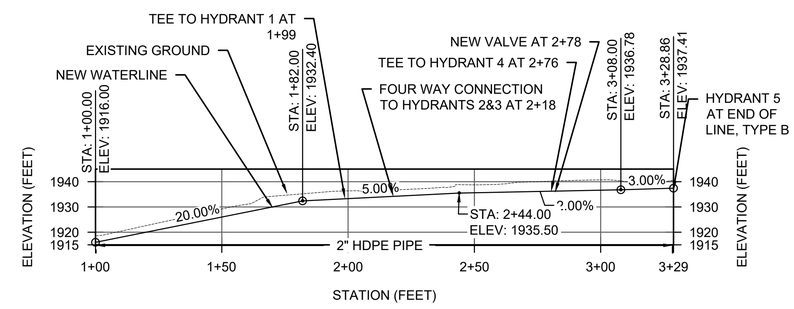

VOLUNTEER VILLAGE LATERAL V1 PROFILE

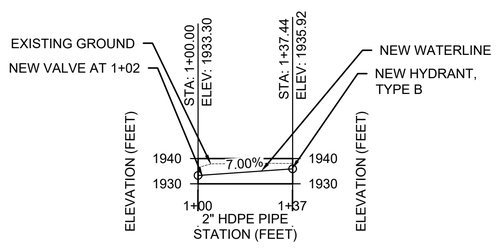

VOLUNTEER VILLAGE HYDRANT 1 PROFILE

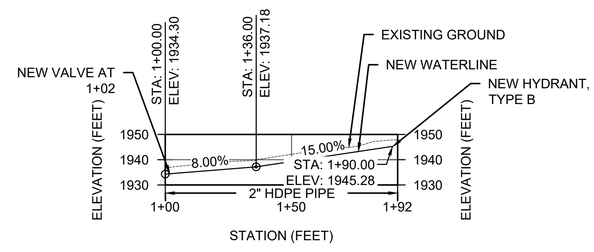

VOLUNTEER VILLAGE HYDRANT 2 PROFILE

United States Department of Agriculture
Forest Service

(R08)
SOUTHERN REGION

STAMPS, LOGOS, AND SEALS

NO.	REVISION / ISSUE	DATE
4		
3		
2		
1		

PROJECT NAME

SHERANDO RECREATION AREA WATER SYSTEM REPLACEMENT

GEORGE WASHINGTON & JEFFERSON NATIONAL FORESTS

GLENWOOD/PEDLAR RANGER DISTRICTS

DRAWING TITLE

VOLUNTEER VILLAGE

DATE 11/19/2024	ARCHIVE NO.
DESIGNER A. FOX	DRAWING SHEET NO. CU-08
DRAWN A. FOX	
CHECKED D. KIMBALL	
PROJECT NO.	SHEET 010 OF 030

6/28/26 13:48 RORYMULLENNEX C:\USERS\RORYMULLENNEX\APPDATA\LOCAL\BOX\BOX EDIT\DOCUMENTS\HUVHZGLALEKQN3EPRPDDBW==\SHERANDO WATER SYSTEM.DWG;

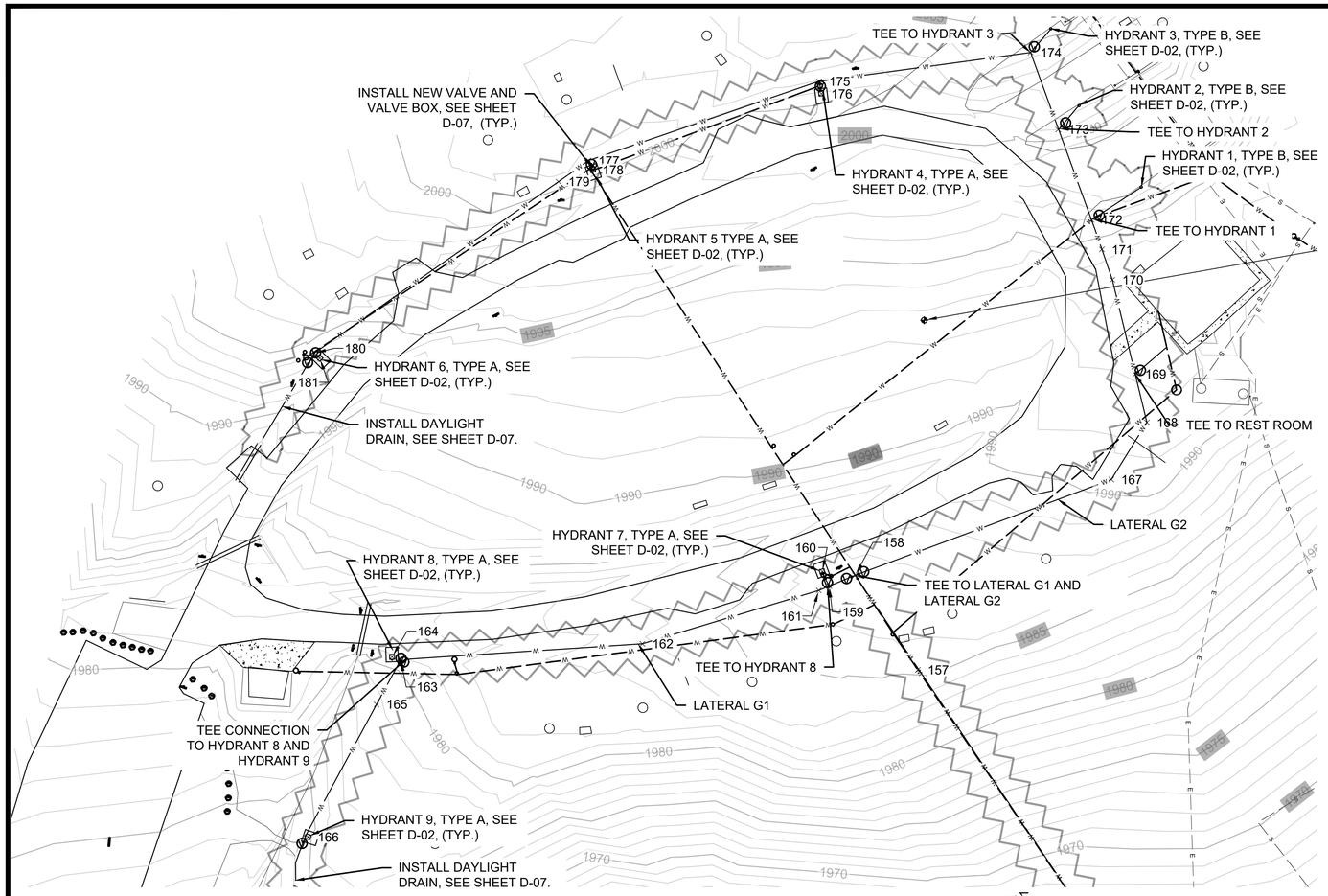

15' 0 15' 30'
SCALE IN FEET

NOTES:

1. ALL VALVES SHALL BE PLACED WITHIN 2 FEET OF LATERAL TEE OR DRAIN TEE UNLESS OTHERWISE SHOWN FOR SOME BUILDINGS WHERE THE VALVES SHALL BE INSTALLED IN THE EXISTING MANHOLE.
2. ALL HYDRANTS SHOWN WITHOUT PROFILES SHALL BE SLOPED TO DRAIN.
3. ALL LATERAL LINE SIZES NOT SHOWN SHALL BE 2 INCHES IN DIAMETER.

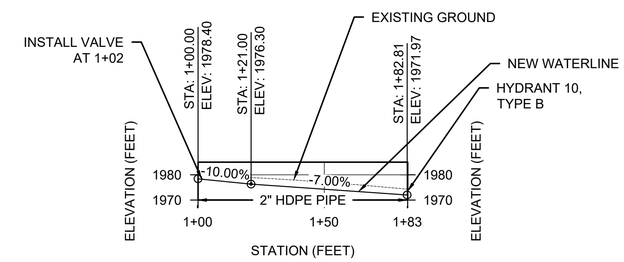

GROUP LOOP HYDRANT 10 PROFILE

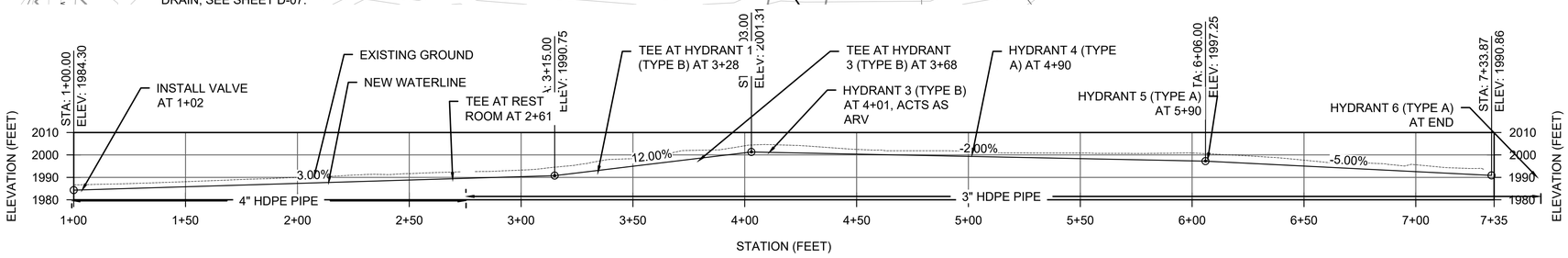

GROUP LOOP LATERAL G2 PROFILE

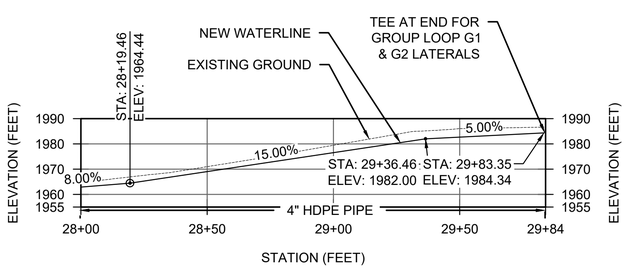

B-C-GROUP LOOP MAINLINE PROFILE

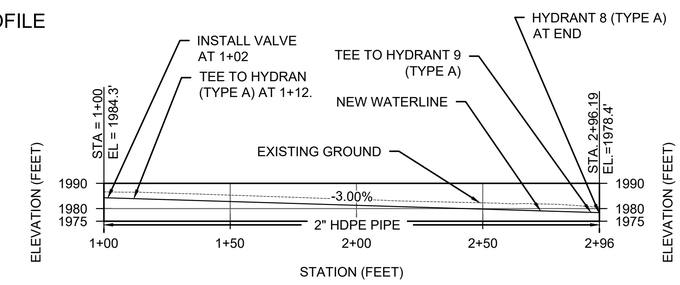

GROUP LOOP LATERAL G1 PROFILE

USDA

United States Department of Agriculture
Forest Service

(R08)
SOUTHERN REGION

STAMPS, LOGOS, AND SEALS

NO.	REVISION / ISSUE	DATE
4		
3		
2		
1		

PROJECT NAME

SHERANDO RECREATION AREA WATER SYSTEM REPLACEMENT

GEORGE WASHINGTON & JEFFERSON NATIONAL FORESTS

GLENWOOD/PEDLAR RANGER DISTRICTS

DRAWING TITLE

GROUP LOOP

DATE 11/19/2024	ARCHIVE NO. A. FOX
DESIGNER A. FOX	DRAWING SHEET NO. CU-09
DRAWN A. FOX	
CHECKED D. KIMBALL	
PROJECT NO.	SHEET 011 OF 030

7/22/25 11:30 RORY.MULLENNEX C:\USERS\RORYMULLENNEX\ONEDRIVE - USDA\DOCUMENTS\RORY MULLENNEX\FACILITIES\GLENWOOD-PEDLAR\SHERANDO LAKE REC AREA\WATER SYSTEM\100% DRAFT\SHERANDO WATER SYSTEM G-01 - CU-19 07212025.DWG;

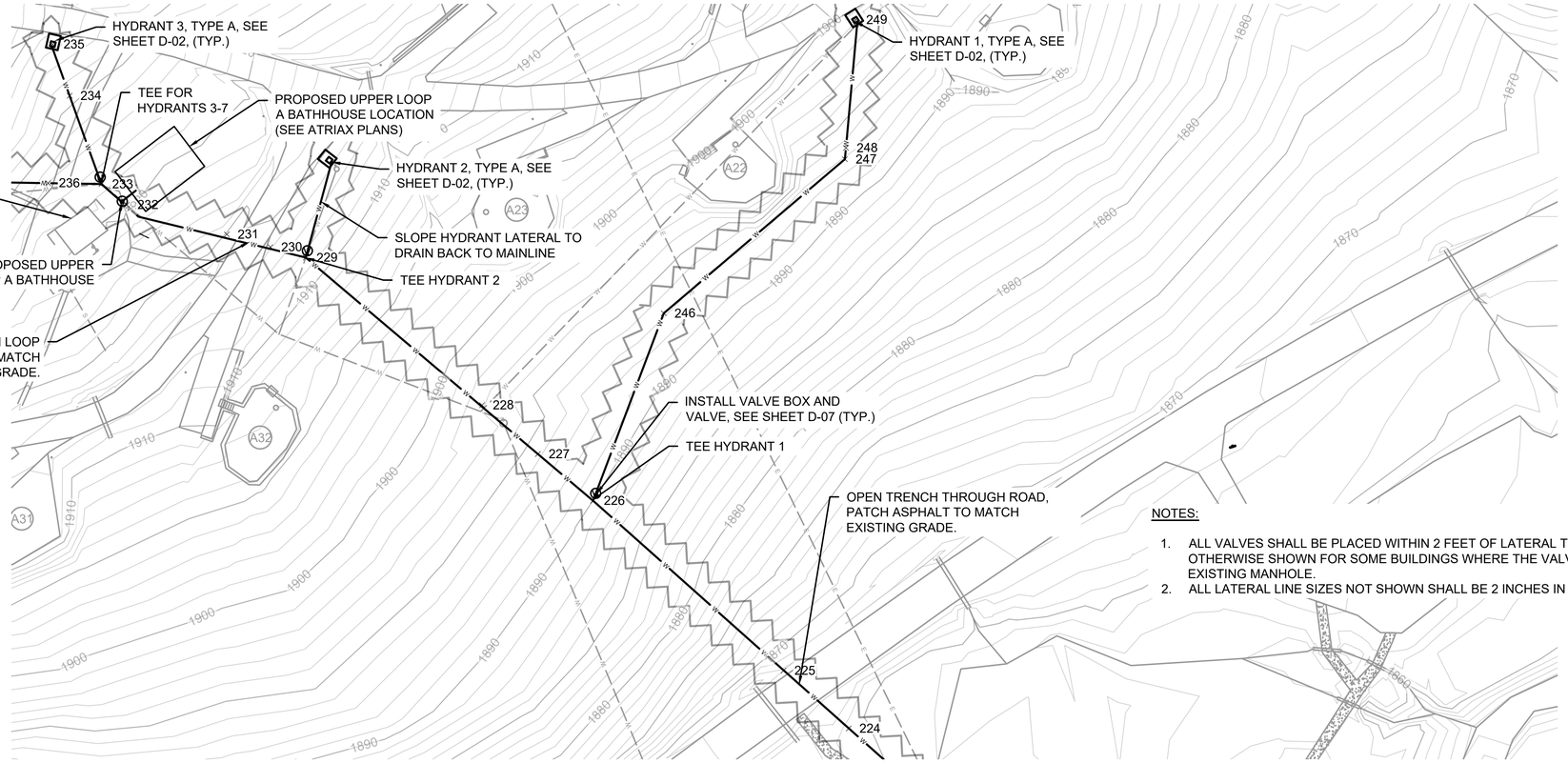

NOTES:

1. ALL VALVES SHALL BE PLACED WITHIN 2 FEET OF LATERAL TEE OR DRAIN TEE UNLESS OTHERWISE SHOWN FOR SOME BUILDINGS WHERE THE VALVES SHALL BE INSTALLED IN THE EXISTING MANHOLE.
2. ALL LATERAL LINE SIZES NOT SHOWN SHALL BE 2 INCHES IN DIAMETER.

15' 0 15' 30'
SCALE IN FEET

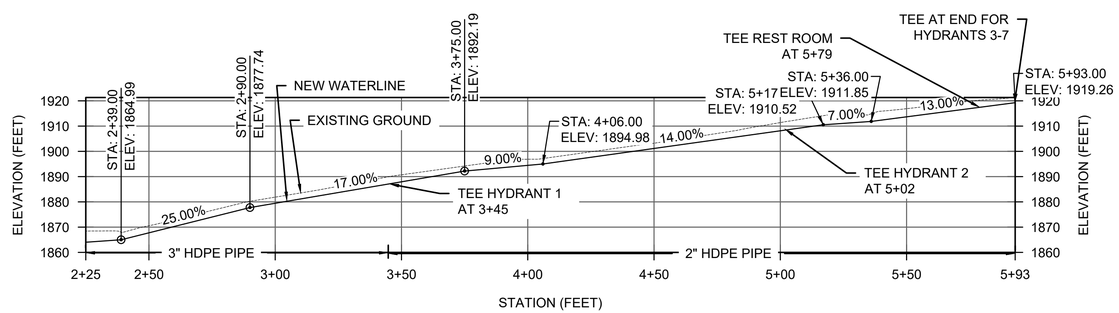

UPPER A LOOP MAINLINE PROFILE

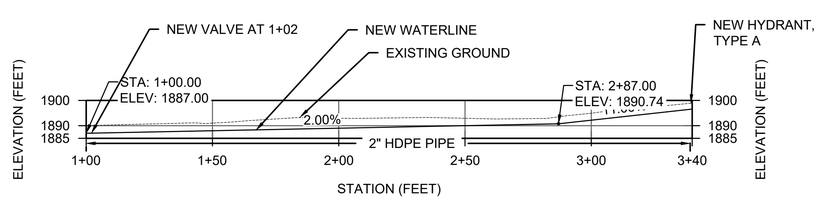

UPPER A LOOP HYDRANT 1 PROFILE

USDA FOREST SERVICE

United States Department of Agriculture
Forest Service

(R08)
SOUTHERN REGION

STAMPS, LOGOS, AND SEALS

NO.	REVISION / ISSUE	DATE
4		
3		
2		
1		

PROJECT NAME

SHERANDO RECREATION AREA WATER SYSTEM REPLACEMENT

GEORGE WASHINGTON & JEFFERSON NATIONAL FORESTS

GLENWOOD/PEDLAR RANGER DISTRICTS

DRAWING TITLE

MAINLINE TO UPPER A LOOP

DATE 11/19/2024	ARCHIVE NO.
DESIGNER A. FOX	DRAWING SHEET NO. CU-10
DRAWN A. FOX	
CHECKED D. KIMBALL	
PROJECT NO.	SHEET 012 OF 030

6/28/26 13:48 RORY.MULLENNEX C:\USERS\RORY.MULLENNEX\APPDATA\LOCAL\BOX\BOX EDIT\DOCUMENTS\HUYHZGLALEKQN3EPRPDDBW==\SHERANDO WATER SYSTEM.DWG;

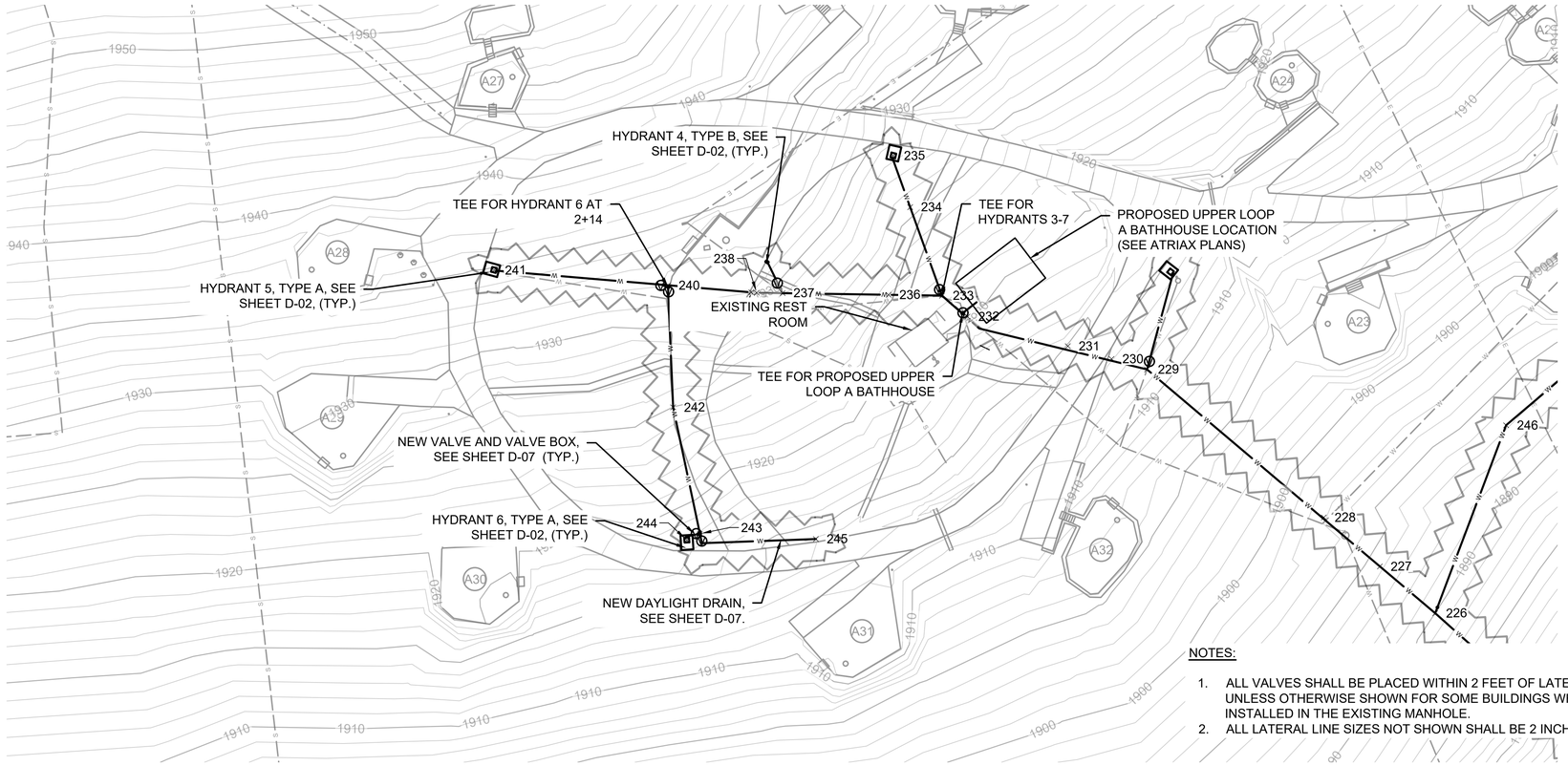

15' 0 15' 30'
SCALE IN FEET

NOTES:

1. ALL VALVES SHALL BE PLACED WITHIN 2 FEET OF LATERAL TEE OR DRAIN TEE UNLESS OTHERWISE SHOWN FOR SOME BUILDINGS WHERE THE VALVES SHALL BE INSTALLED IN THE EXISTING MANHOLE.
2. ALL LATERAL LINE SIZES NOT SHOWN SHALL BE 2 INCHES IN DIAMETER.

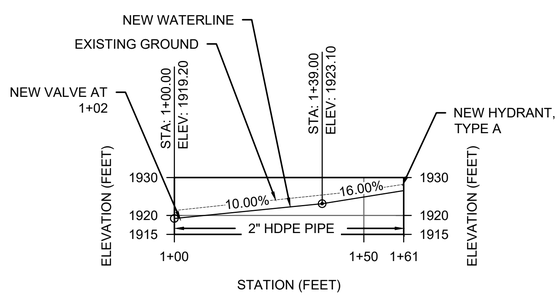

UPPER A LOOP HYDRANT 3 PROFILE

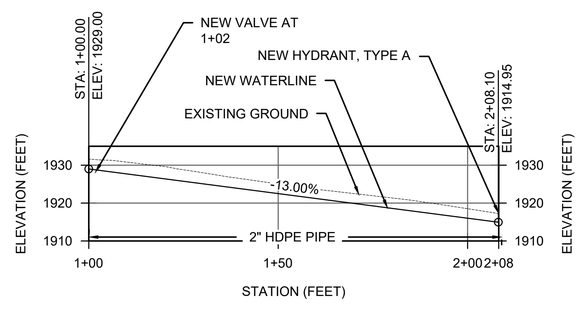

UPPER A LOOP HYDRANT 6 PROFILE

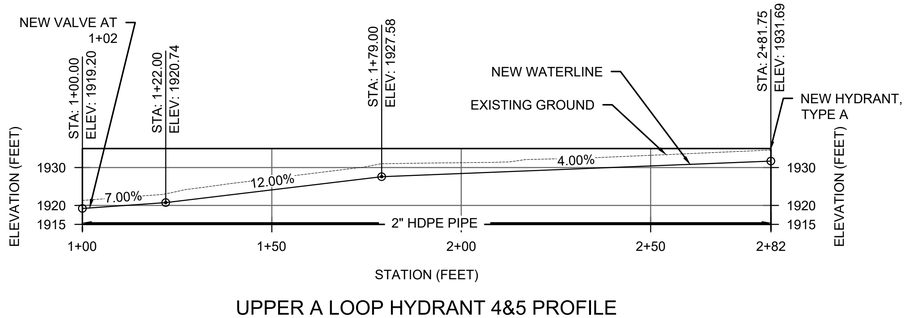

UPPER A LOOP HYDRANT 4&5 PROFILE

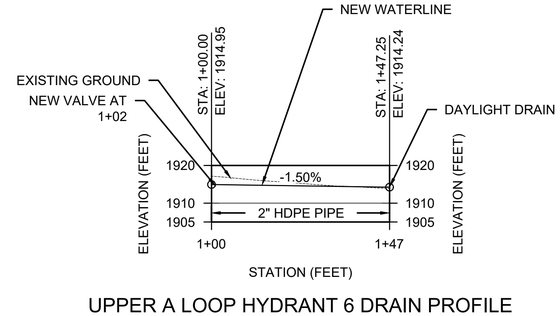

UPPER A LOOP HYDRANT 6 DRAIN PROFILE

USDA FOREST SERVICE

United States Department of Agriculture
Forest Service

(R08)
SOUTHERN REGION

STAMPS, LOGOS, AND SEALS

NO.	REVISION / ISSUE	DATE
4		
3		
2		
1		

PROJECT NAME

SHERANDO RECREATION AREA WATER SYSTEM REPLACEMENT

GEORGE WASHINGTON & JEFFERSON NATIONAL FORESTS

GLENWOOD/PEDLAR RANGER DISTRICTS

DRAWING TITLE

UPPER A LOOP

DATE 11/19/2024	ARCHIVE NO.
DESIGNER A. FOX	DRAWING SHEET NO. CU-11
DRAWN A. FOX	
CHECKED D. KIMBALL	
PROJECT NO.	SHEET 013 OF 030

6/28/26 13:48 RORY.MULLENNEX C:\USERS\RORYMULLENNEX\APPDATA\LOCAL\BOX\BOX EDIT\DOCUMENTS\HUYHZGLALEKQN\SEPRPDDBW=\SHERANDO WATER SYSTEM.DWG;

NOTES:

1. ALL VALVES SHALL BE PLACED WITHIN 2 FEET OF LATERAL TEE OR DRAIN TEE UNLESS OTHERWISE SHOWN FOR SOME BUILDINGS WHERE THE VALVES SHALL BE INSTALLED IN THE EXISTING MANHOLE.
2. ALL HYDRANTS AND VALVES SHALL BE SLOPED TO DRAIN.
3. ALL LATERAL LINE SIZES NOT SHOWN SHALL BE 2 INCHES IN DIAMETER.
4. CASING PIPE SIZES MAY VARY DUE TO COMPLETING ONE LARGE BORING OR TWO SEPARATE BORINGS. CONTRACTOR SHALL FOLLOW ALL FEDERAL, STATE, AND LOCAL LAWS AS WELL AS INDUSTRY GUIDANCE WHEN SELECTING CARRIER SIZING.

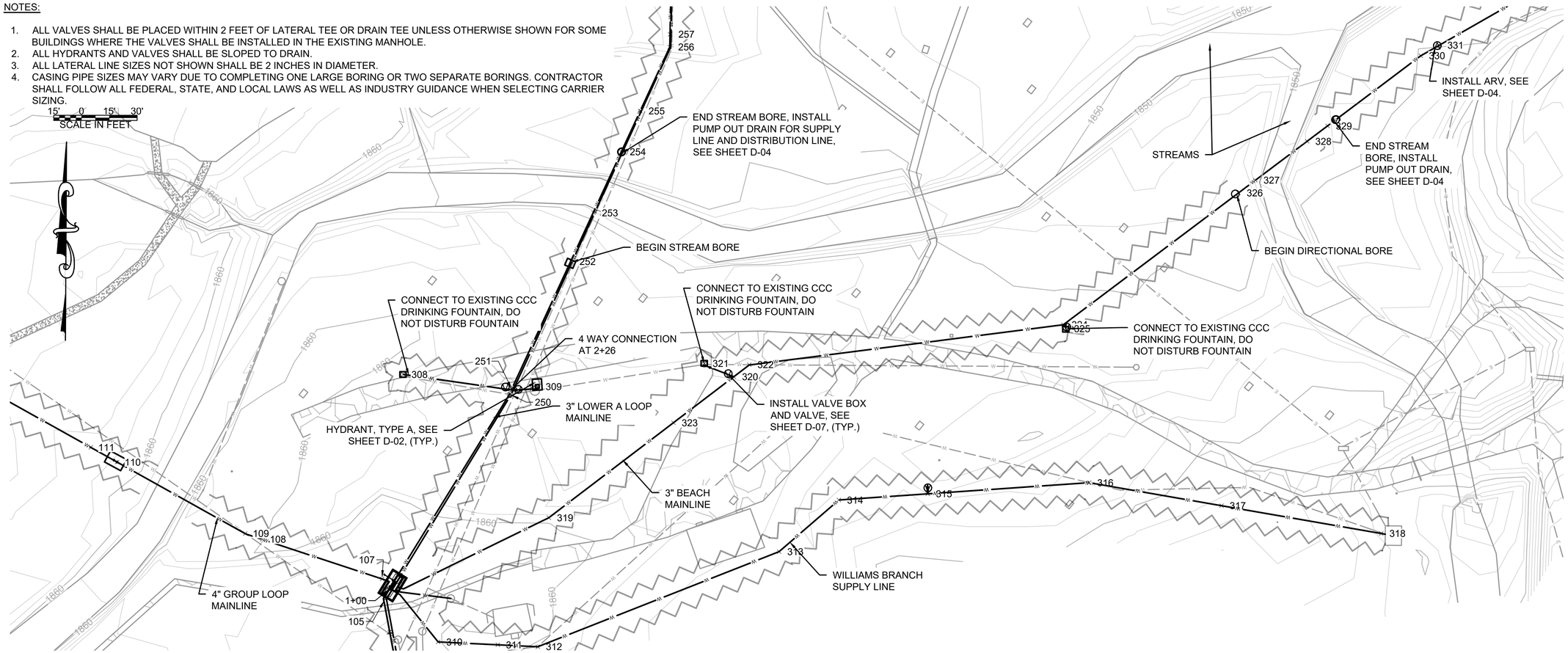

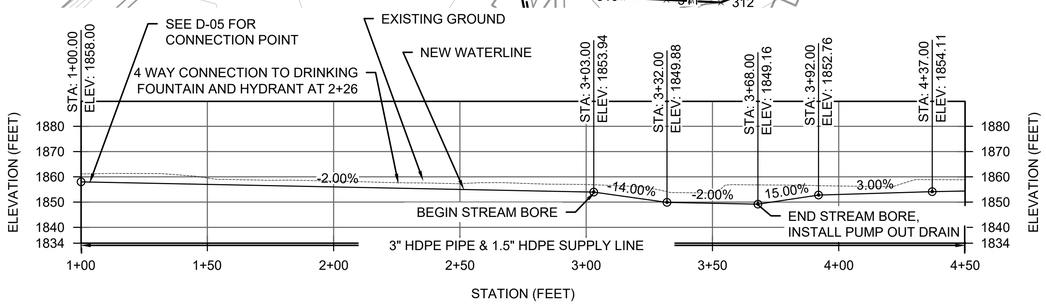

LOOP A MAINLINE PROFILE

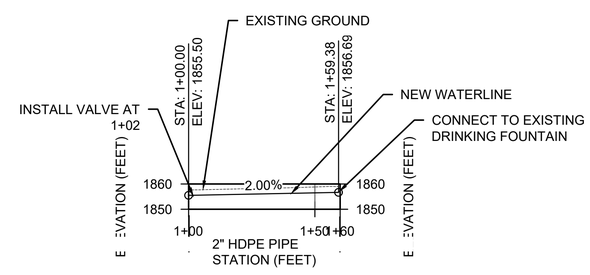

WILLIAMS BRANCH DRINKING FOUNTAIN PROFILE

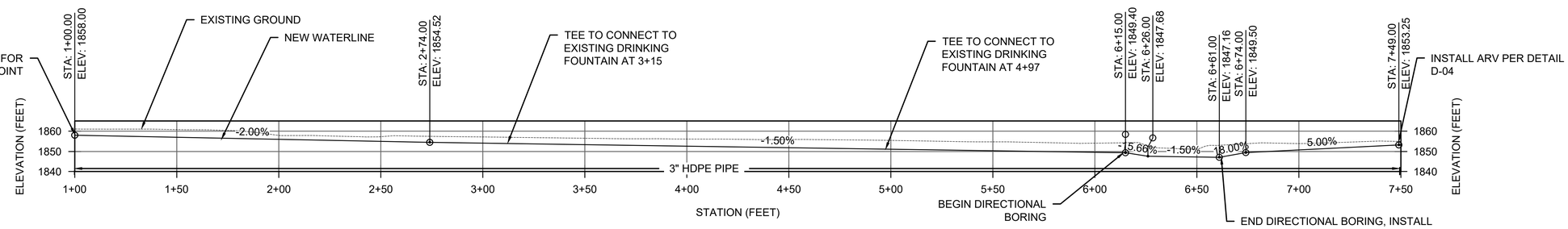

BEACH AREA MAINLINE PROFILE

USDA FOREST SERVICE

United States Department of Agriculture
Forest Service

(R08)
SOUTHERN REGION

STAMPS, LOGOS, AND SEALS

NO.	REVISION / ISSUE	DATE
4		
3		
2		
1		

PROJECT NAME

SHERANDO RECREATION AREA WATER SYSTEM REPLACEMENT

GEORGE WASHINGTON & JEFFERSON NATIONAL FORESTS

GLENWOOD/PEDLAR RANGER DISTRICTS

DRAWING TITLE

WILLIAMS BRANCH DAY USE

DATE 11/19/2024	ARCHIVE NO.
DESIGNER A. FOX	DRAWING SHEET NO. CU-12
DRAWN A. FOX	
CHECKED D. KIMBALL	
PROJECT NO.	SHEET 014 OF 030

6/28/26 13:48 RORY.MULLENNEX C:\USERS\RORYMULLENNEX\APPDATA\LOCAL\BOX\BOX EDIT\DOCUMENTS\HUYHZGLALEKQNSERPRDDBW==\SHERANDO WATER SYSTEM.DWG;

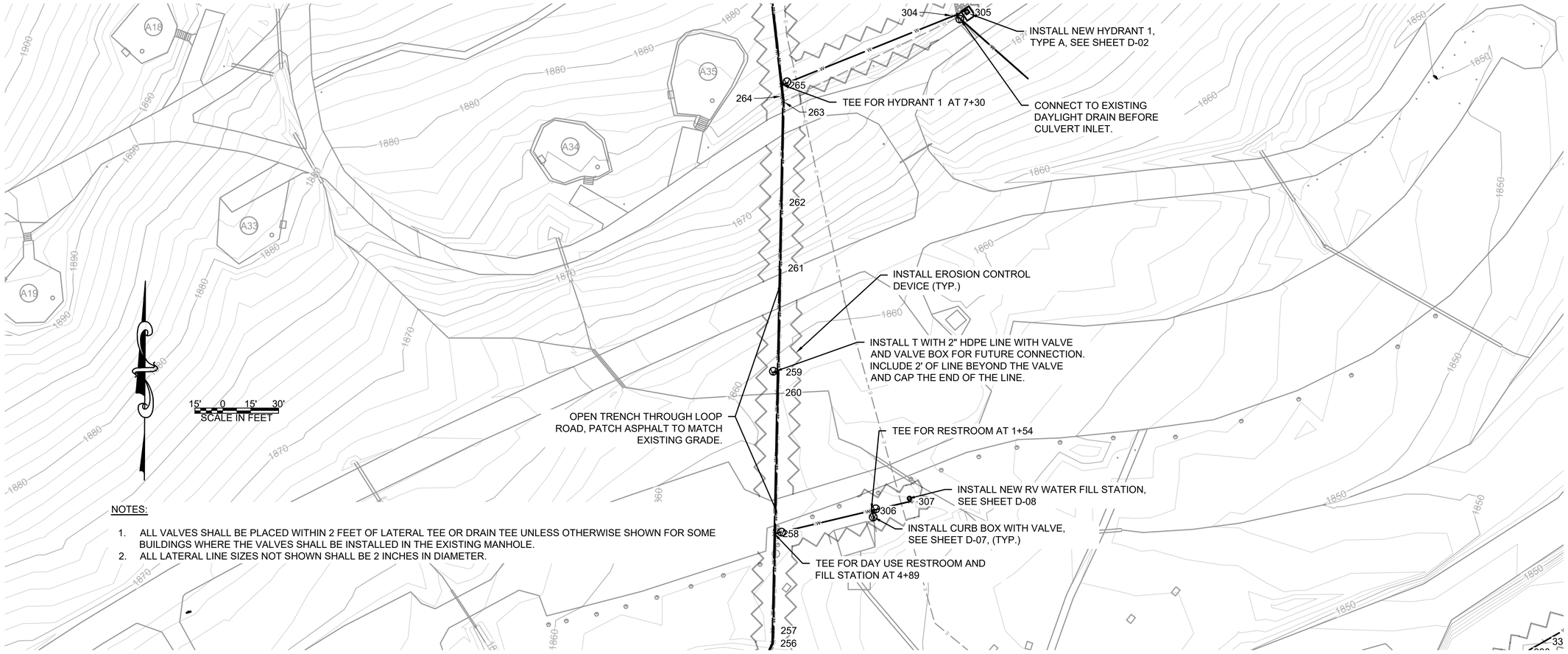

NOTES:

1. ALL VALVES SHALL BE PLACED WITHIN 2 FEET OF LATERAL TEE OR DRAIN TEE UNLESS OTHERWISE SHOWN FOR SOME BUILDINGS WHERE THE VALVES SHALL BE INSTALLED IN THE EXISTING MANHOLE.
2. ALL LATERAL LINE SIZES NOT SHOWN SHALL BE 2 INCHES IN DIAMETER.

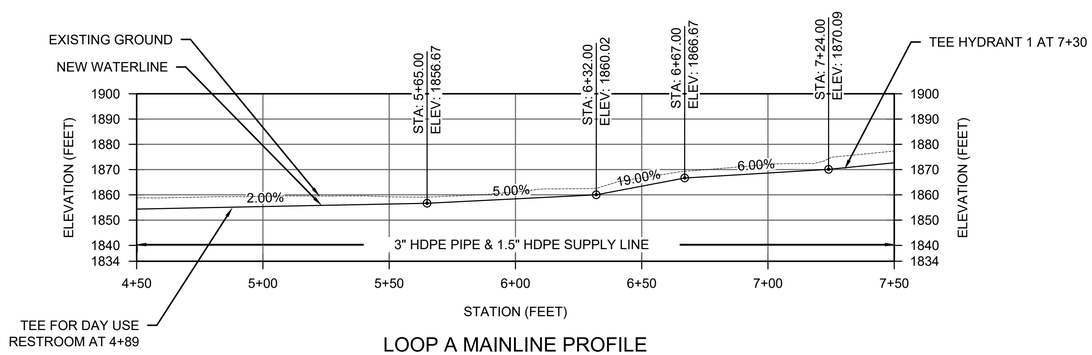

LOOP A MAINLINE PROFILE

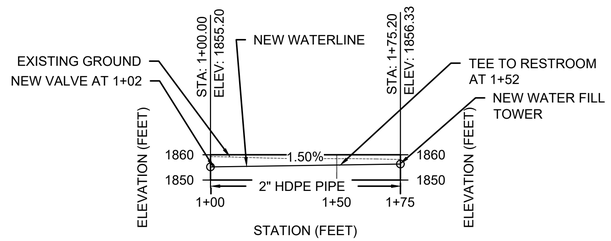

DAY USE RR & FILL STATION PROFILE

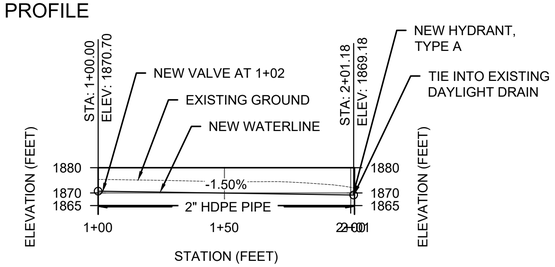

LOWER A LOOP HYDRANT 1 PROFILE

USDA FOREST SERVICE

United States Department of Agriculture
Forest Service

(R08)
SOUTHERN REGION

STAMPS, LOGOS, AND SEALS

NO.	REVISION / ISSUE	DATE
4		
3		
2		
1		

PROJECT NAME

SHERANDO RECREATION AREA WATER SYSTEM REPLACEMENT

GEORGE WASHINGTON & JEFFERSON NATIONAL FORESTS

GLENWOOD/PEDLAR RANGER DISTRICTS

DRAWING TITLE

DAY USE TO LOWER A LOOP

DATE 11/19/2024	ARCHIVE NO.
DESIGNER A. FOX	DRAWING SHEET NO. CU-13
DRAWN A. FOX	
CHECKED D. KIMBALL	
PROJECT NO.	SHEET 015 OF 030

6/28/26 13:48 RORYMULLENNEX C:\USERS\RORYMULLENNEX\APPDATA\LOCAL\BOX\BOX EDIT\DOCUMENTS\HUYHZGLALEKQN3EPRPDDBW==\SHERANDO WATER SYSTEM.DWG;

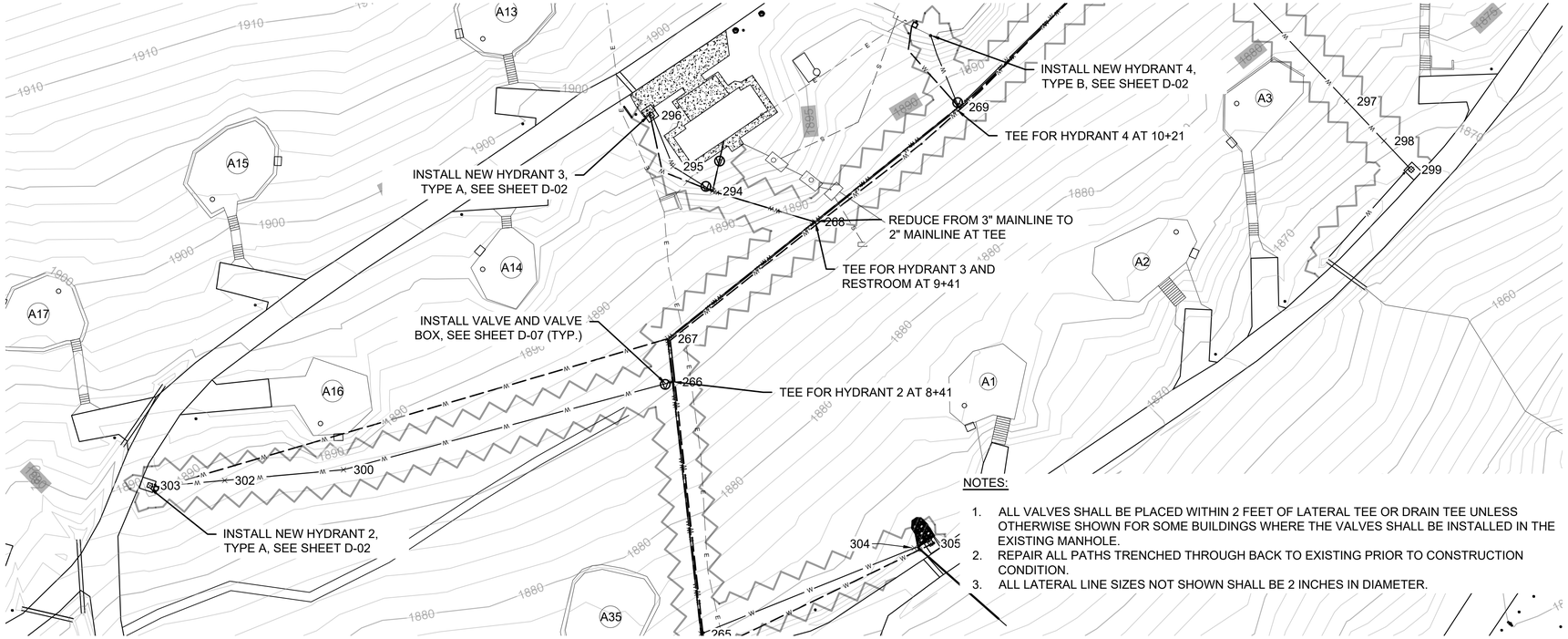

NOTES:

1. ALL VALVES SHALL BE PLACED WITHIN 2 FEET OF LATERAL TEE OR DRAIN TEE UNLESS OTHERWISE SHOWN FOR SOME BUILDINGS WHERE THE VALVES SHALL BE INSTALLED IN THE EXISTING MANHOLE.
2. REPAIR ALL PATHS TRENCHED THROUGH BACK TO EXISTING PRIOR TO CONSTRUCTION CONDITION.
3. ALL LATERAL LINE SIZES NOT SHOWN SHALL BE 2 INCHES IN DIAMETER.

15' 0 15' 30'
SCALE IN FEET

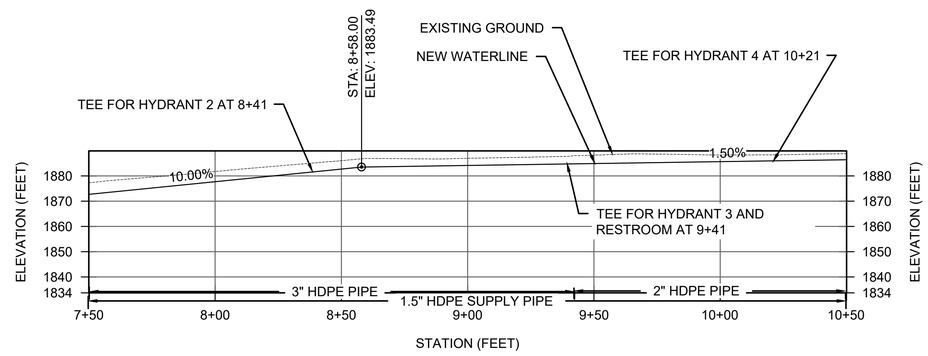

LOOP A MAINLINE PROFILE

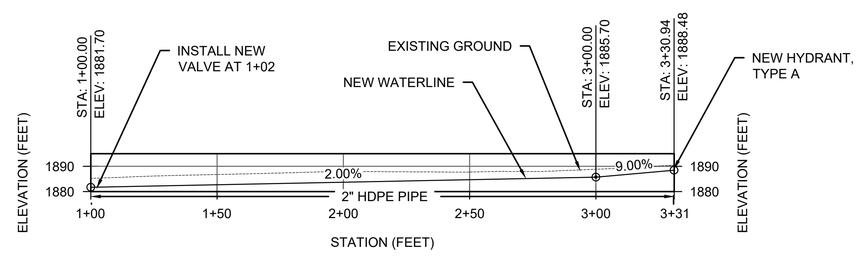

LOWER A LOOP HYDRANT 2 PROFILE

USDA FOREST SERVICE

United States Department of Agriculture
Forest Service

(R08)
SOUTHERN REGION

STAMPS, LOGOS, AND SEALS

NO.	REVISION / ISSUE	DATE
4		
3		
2		
1		

PROJECT NAME

SHERANDO RECREATION AREA WATER SYSTEM REPLACEMENT

GEORGE WASHINGTON & JEFFERSON NATIONAL FORESTS

GLENWOOD/PEDLAR RANGER DISTRICTS

DRAWING TITLE

LOWER A LOOP

DATE 11/19/2024	ARCHIVE NO.
DESIGNER A. FOX	DRAWING SHEET NO. CU-14
DRAWN A. FOX	
CHECKED D. KIMBALL	
PROJECT NO.	SHEET 016 OF 030

7/22/26 12:34 RORYMULLENNEX C:\USERS\RORYMULLENNEX\ONEDRIVE - USDA\DOCUMENTS\RORY MULLENNEX\FACILITIES\GLENWOOD-PEDLAR\SHERANDO LAKE REC AREA\WATER SYSTEM\100% DRAFT\SHERANDO WATER SYSTEM G-01 - CU-19 07212026.DWG;

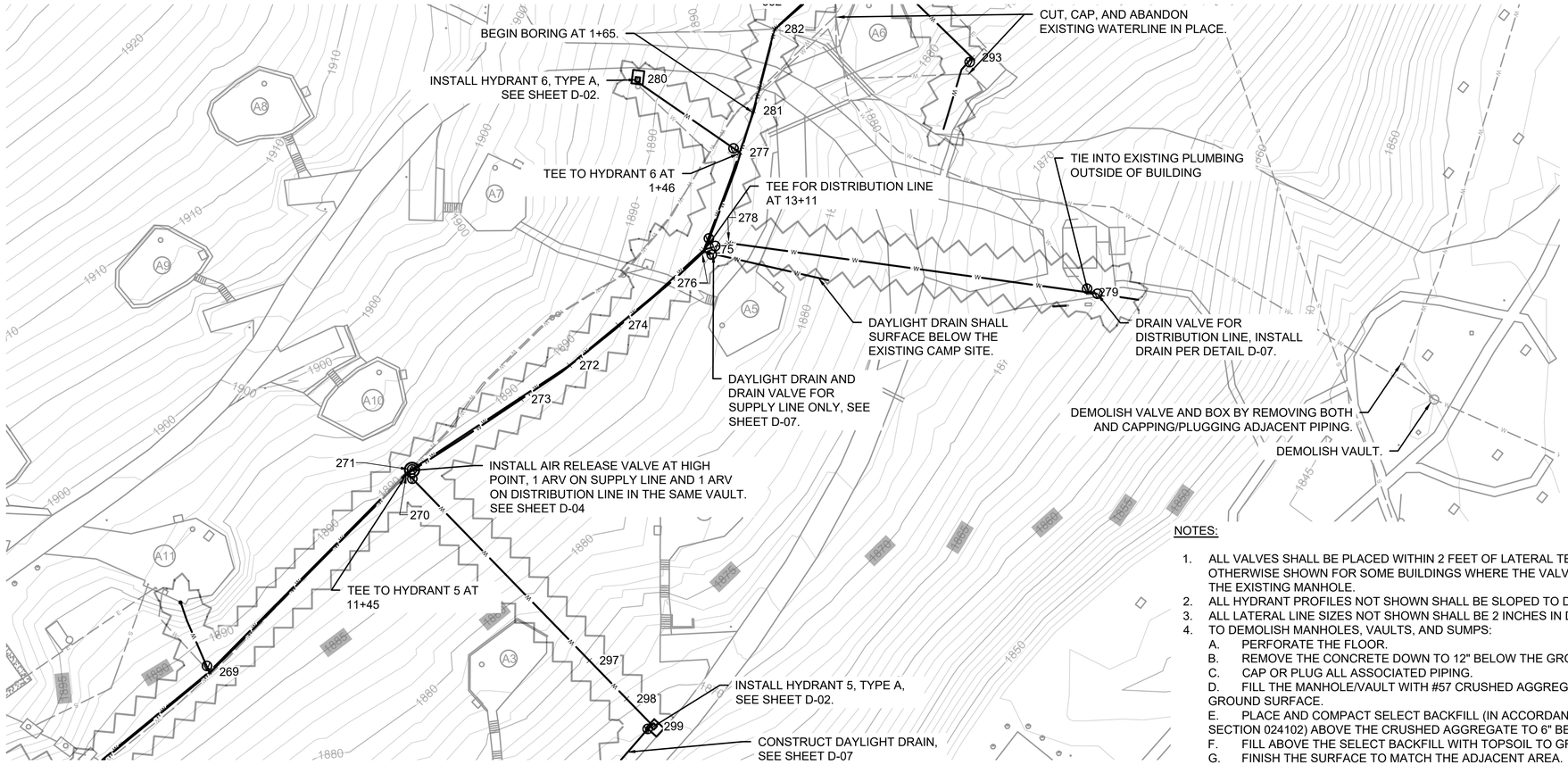

NOTES:

1. ALL VALVES SHALL BE PLACED WITHIN 2 FEET OF LATERAL TEE OR DRAIN TEE UNLESS OTHERWISE SHOWN FOR SOME BUILDINGS WHERE THE VALVES SHALL BE INSTALLED IN THE EXISTING MANHOLE.
2. ALL HYDRANT PROFILES NOT SHOWN SHALL BE SLOPED TO DRAIN.
3. ALL LATERAL LINE SIZES NOT SHOWN SHALL BE 2 INCHES IN DIAMETER.
4. TO DEMOLISH MANHOLES, VAULTS, AND SUMPS:
   A. PERFORATE THE FLOOR.
   B. REMOVE THE CONCRETE DOWN TO 12" BELOW THE GROUND SURFACE.
   C. CAP OR PLUG ALL ASSOCIATED PIPING.
   D. FILL THE MANHOLE/VAULT WITH #57 CRUSHED AGGREGATE TO 12" BELOW THE GROUND SURFACE.
   E. PLACE AND COMPACT SELECT BACKFILL (IN ACCORDANCE WITH SPECIFICATION SECTION 024102) ABOVE THE CRUSHED AGGREGATE TO 6" BELOW GROUND SURFACE.
   F. FILL ABOVE THE SELECT BACKFILL WITH TOPSOIL TO GROUND SURFACE.
   G. FINISH THE SURFACE TO MATCH THE ADJACENT AREA.

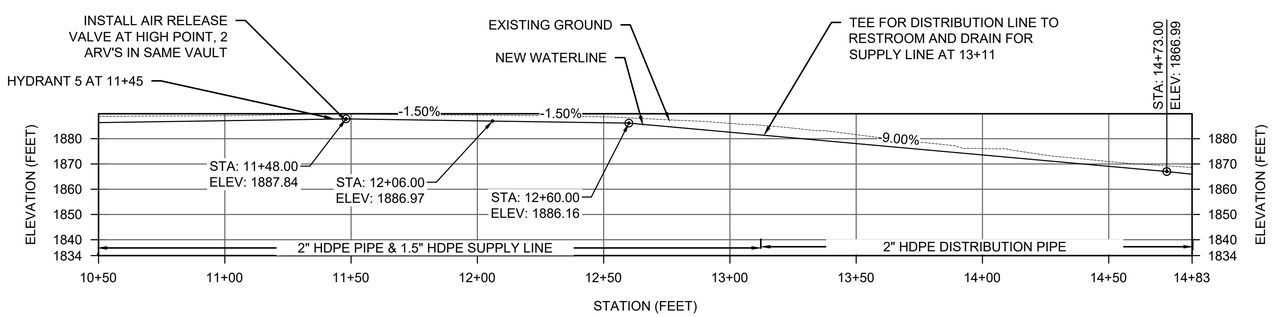

LOOP A MAINLINE PROFILE

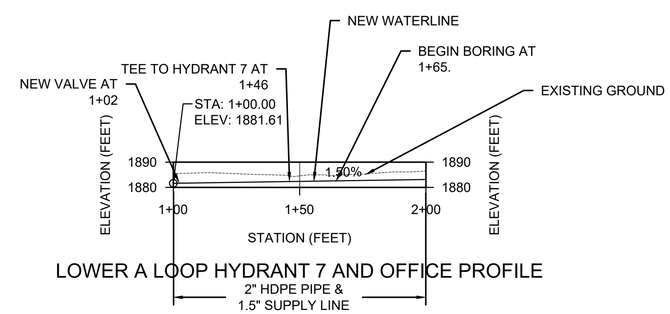

LOWER A LOOP HYDRANT 7 AND OFFICE PROFILE

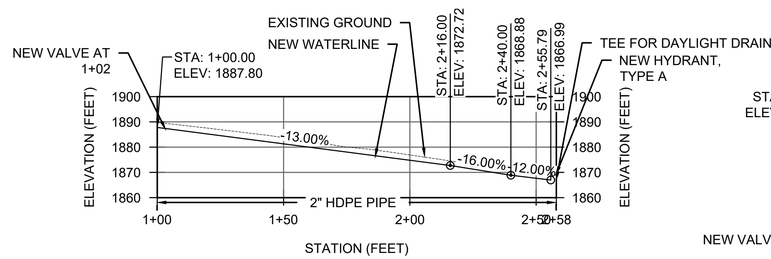

LOWER A LOOP HYDRANT 5 PROFILE

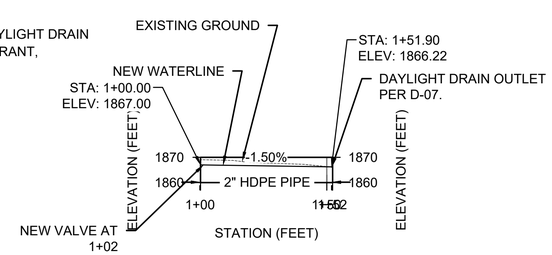

LOWER A LOOP HYDRANT 5 DRAIN PROFILE

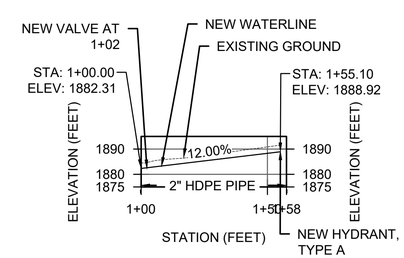

LOWER A LOOP HYDRANT 7 PROFILE

USDA FOREST SERVICE

United States Department of Agriculture
Forest Service

(R08)
SOUTHERN REGION

STAMPS, LOGOS, AND SEALS

NO.	REVISION / ISSUE	DATE
4		
3		
2		
1		

PROJECT NAME

SHERANDO RECREATION AREA WATER SYSTEM REPLACEMENT

GEORGE WASHINGTON & JEFFERSON NATIONAL FORESTS

GLENWOOD/PEDLAR RANGER DISTRICTS

DRAWING TITLE

LOWER A LOOP & OFFICE LATERAL

DATE 11/19/2024	ARCHIVE NO.
DESIGNER A. FOX	DRAWING SHEET NO. CU-15
DRAWN A. FOX	
CHECKED D. KIMBALL	
PROJECT NO.	SHEET 017 OF 030

6/28/26 13:48 RORYMULLENNEX C:\USERS\RORYMULLENNEX\APPDATA\LOCAL\BOX\BOX EDIT\DOCUMENTS\HUYHZGLALEKQN3EPRPDDBW==\SHERANDO WATER SYSTEM.DWG;

NOTES:

1. ALL VALVES SHALL BE PLACED WITHIN 2 FEET OF LATERAL TEE OR DRAIN TEE UNLESS OTHERWISE SHOWN FOR SOME BUILDINGS WHERE THE VALVES SHALL BE INSTALLED IN THE EXISTING MANHOLE.
2. ALL WATERLINE FROM THE WELL HOUSE TO THE INSULATED VALVE BOX AND FROM THE VALVE BOX TO THE OFFICE SHALL BE BURIED A MINIMUM OF 36" BELOW GRADE.
3. ALL LATERAL LINE SIZES NOT SHOWN SHALL BE 2 INCHES IN DIAMETER.
4. WATER SERVICE TO RESIDENCE MUST BE MAINTAINED THROUGHOUT PROJECT DURATION EXCEPT FOR AN OUTAGE OF ONE WEEK, MAXIMUM. WATER SERVICE TO THE RESIDENCE CAN BE PROVIDED FROM THE LOOP A WELL HOUSE (SHOWN ON THIS SHEET), EVEN WHEN THE REST OF THE DISTRIBUTION SYSTEM IS INOPERABLE.
5. TO DEMOLISH MANHOLES, VAULTS, AND SUMPS:
   A. PERFORATE THE FLOOR.
   B. REMOVE THE CONCRETE DOWN TO 12" BELOW THE GROUND SURFACE.
   C. CAP OR PLUG ALL ASSOCIATED PIPING.
   D. FILL THE MANHOLE/VAULT WITH #57 CRUSHED AGGREGATE TO 12" BELOW THE GROUND SURFACE.
   E. PLACE AND COMPACT SELECT BACKFILL (IN ACCORDANCE WITH SPECIFICATION SECTION 024102) ABOVE THE CRUSHED AGGREGATE TO 6" BELOW GROUND SURFACE.
   F. FILL ABOVE THE SELECT BACKFILL WITH TOPSOIL TO GROUND SURFACE.
   G. FINISH THE SURFACE TO MATCH THE ADJACENT AREA.

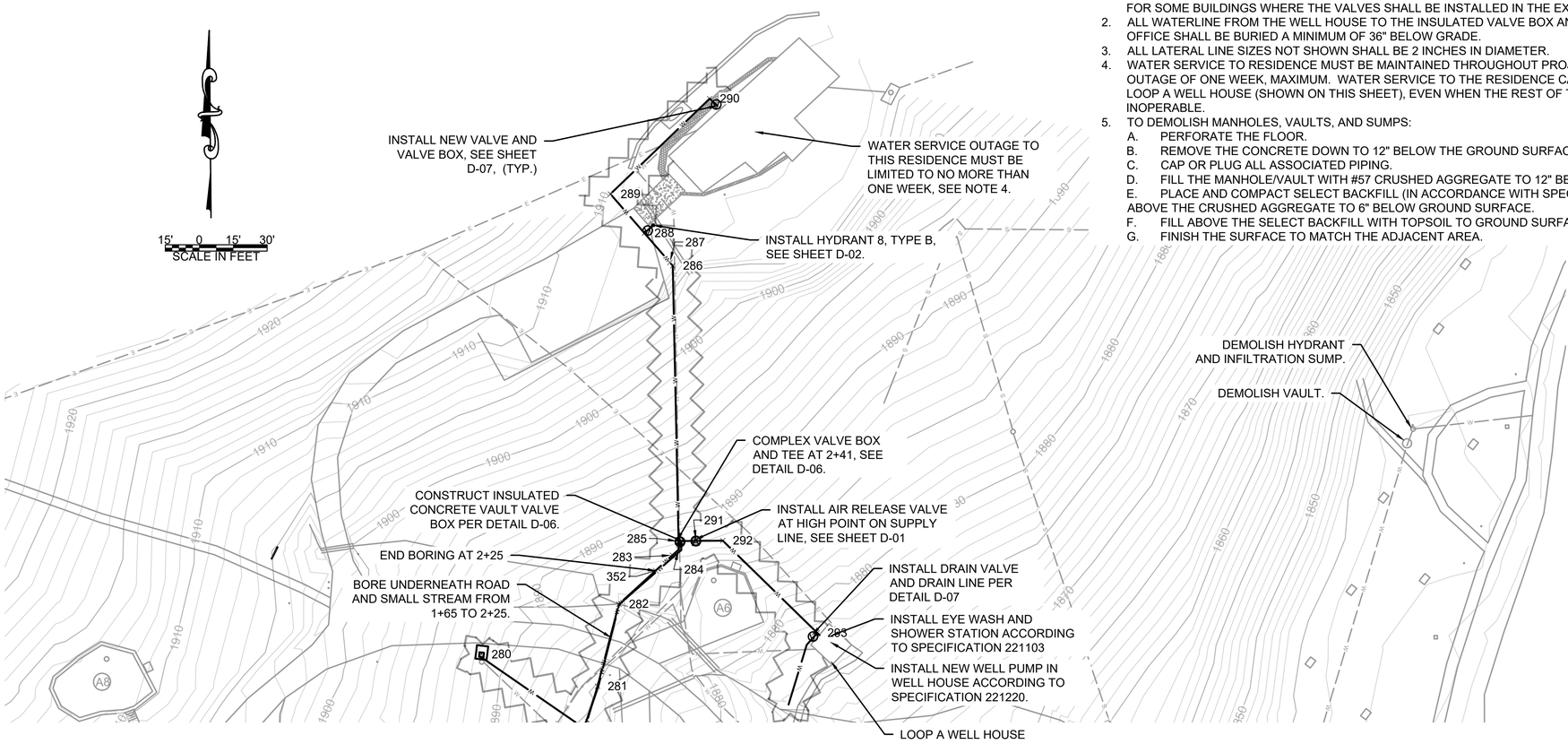

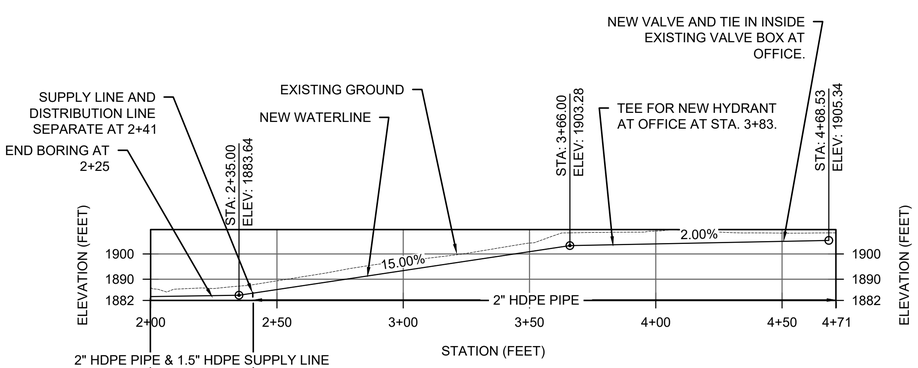

LOWER A LOOP HYDRANT 7 AND OFFICE PROFILE

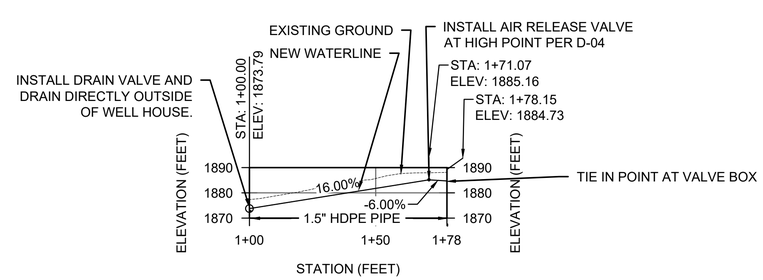

LOWER A WELL FROM JUNCTION PROFILE

USDA FOREST SERVICE

United States Department of Agriculture
Forest Service

(R08)
SOUTHERN REGION

STAMPS, LOGOS, AND SEALS

NO.	REVISION / ISSUE	DATE
4		
3		
2		
1		

PROJECT NAME

SHERANDO RECREATION AREA WATER SYSTEM REPLACEMENT

GEORGE WASHINGTON & JEFFERSON NATIONAL FORESTS

GLENWOOD/PEDLAR RANGER DISTRICTS

DRAWING TITLE

OFFICE AND LOWER A LOOP WELLHOUSE

DATE 11/19/2024	ARCHIVE NO.
DESIGNER A. FOX	DRAWING SHEET NO.
DRAWN A. FOX	CU-16
CHECKED D. KIMBALL	
PROJECT NO.	SHEET 018 OF 030

6/28/26 13:48 RORYMULLENNEX C:\USERS\RORYMULLENNEX\APPDATA\LOCAL\BOX\BOX EDIT\DOCUMENTS\HUYHZGLALEKQN3EPRPDDBW==\SHERANDO WATER SYSTEM.DWG;

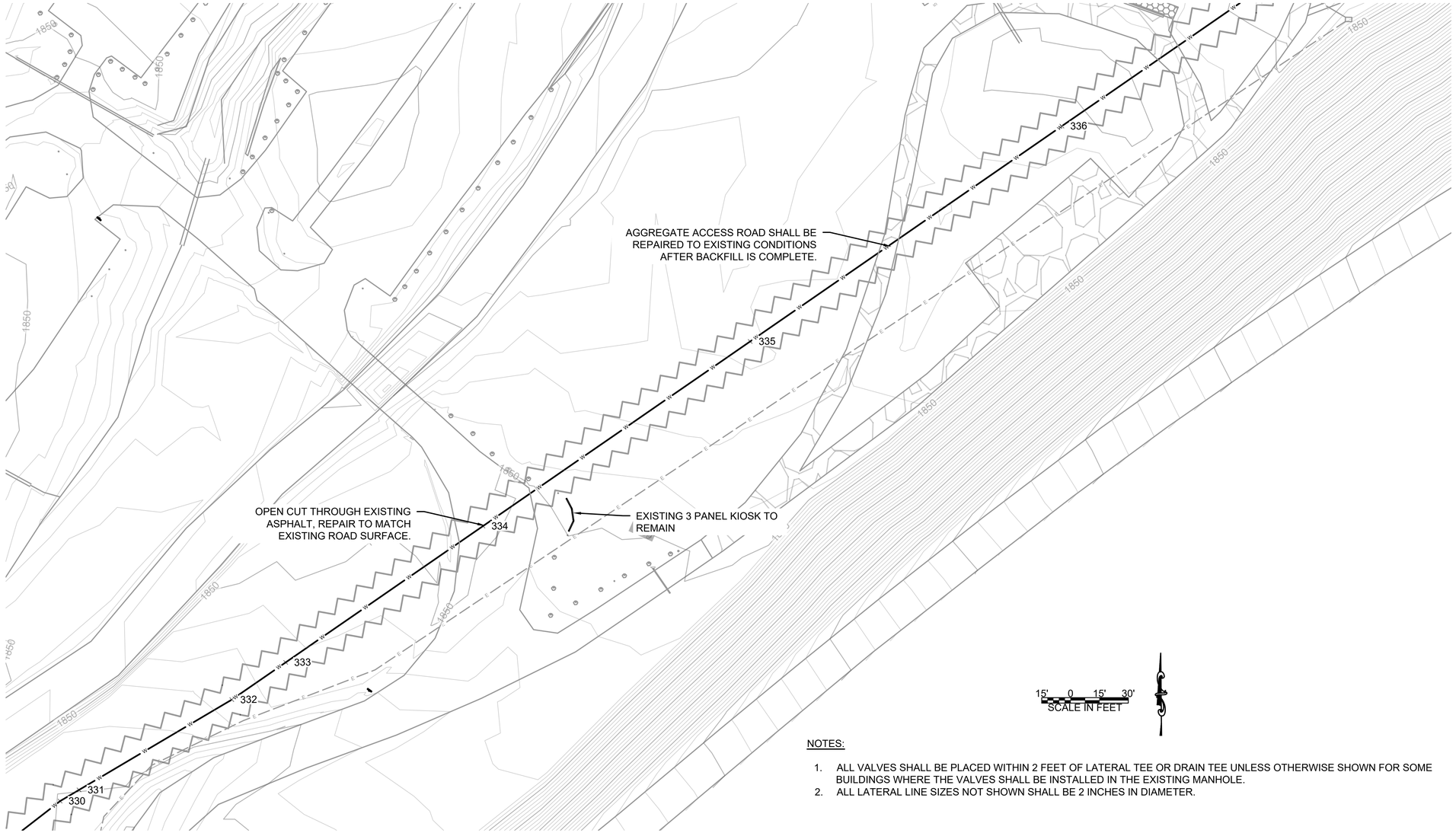

NOTES:

1. ALL VALVES SHALL BE PLACED WITHIN 2 FEET OF LATERAL TEE OR DRAIN TEE UNLESS OTHERWISE SHOWN FOR SOME BUILDINGS WHERE THE VALVES SHALL BE INSTALLED IN THE EXISTING MANHOLE.
2. ALL LATERAL LINE SIZES NOT SHOWN SHALL BE 2 INCHES IN DIAMETER.

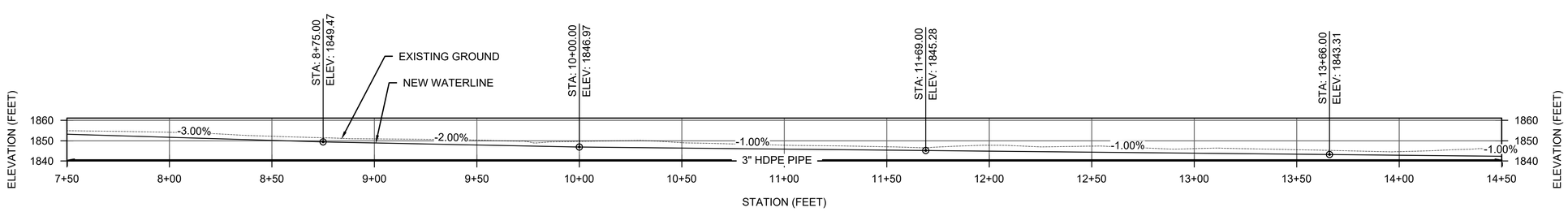

BEACH AREA MAINLINE PROFILE

United States Department of Agriculture
Forest Service

(R08)
SOUTHERN REGION

STAMPS, LOGOS, AND SEALS

NO.	REVISION / ISSUE	DATE
4		
3		
2		
1		

PROJECT NAME

SHERANDO RECREATION AREA WATER SYSTEM REPLACEMENT

GEORGE WASHINGTON & JEFFERSON NATIONAL FORESTS

GLENWOOD/PEDLAR RANGER DISTRICTS

DRAWING TITLE

BEACH MAINLINE

DATE 11/19/2024	ARCHIVE NO.
DESIGNER A.FOX	DRAWING SHEET NO. CU-17
DRAWN A. FOX	
CHECKED D. KIMBALL	
PROJECT NO.	SHEET 019 OF 030

6/28/26 13:48 RORYMULLENNEX C:\USERS\RORYMULLENNEX\APPDATA\LOCAL\BOX\BOX EDIT\DOCUMENTS\HUYHZGLALEKQN3ERPPDBW==\SHERANDO WATER SYSTEM.DWG;

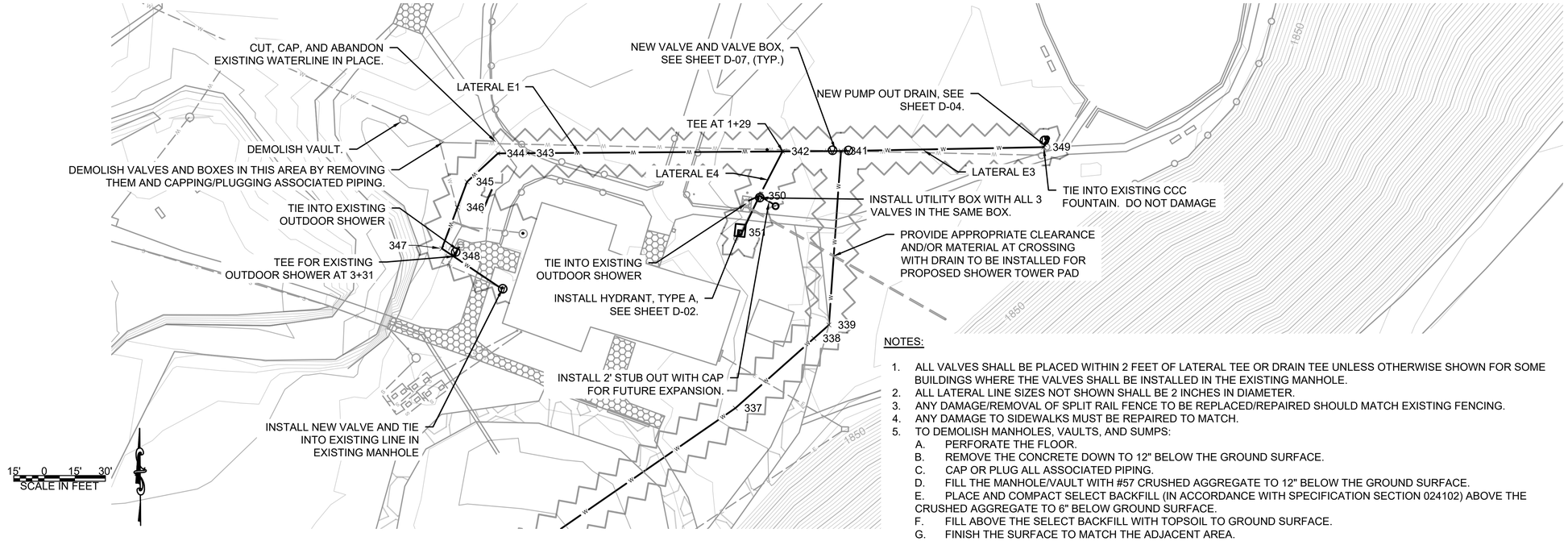

NOTES:

1. ALL VALVES SHALL BE PLACED WITHIN 2 FEET OF LATERAL TEE OR DRAIN TEE UNLESS OTHERWISE SHOWN FOR SOME BUILDINGS WHERE THE VALVES SHALL BE INSTALLED IN THE EXISTING MANHOLE.
2. ALL LATERAL LINE SIZES NOT SHOWN SHALL BE 2 INCHES IN DIAMETER.
3. ANY DAMAGE/REMOVAL OF SPLIT RAIL FENCE TO BE REPLACED/REPAIRED SHOULD MATCH EXISTING FENCING.
4. ANY DAMAGE TO SIDEWALKS MUST BE REPAIRED TO MATCH.
5. TO DEMOLISH MANHOLES, VAULTS, AND SUMPS:
   A. PERFORATE THE FLOOR.
   B. REMOVE THE CONCRETE DOWN TO 12" BELOW THE GROUND SURFACE.
   C. CAP OR PLUG ALL ASSOCIATED PIPING.
   D. FILL THE MANHOLE/VAULT WITH #57 CRUSHED AGGREGATE TO 12" BELOW THE GROUND SURFACE.
   E. PLACE AND COMPACT SELECT BACKFILL (IN ACCORDANCE WITH SPECIFICATION SECTION 024102) ABOVE THE CRUSHED AGGREGATE TO 6" BELOW GROUND SURFACE.
   F. FILL ABOVE THE SELECT BACKFILL WITH TOPSOIL TO GROUND SURFACE.
   G. FINISH THE SURFACE TO MATCH THE ADJACENT AREA.

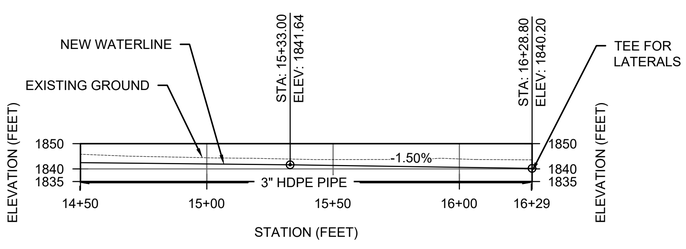

BEACH AREA MAINLINE PROFILE

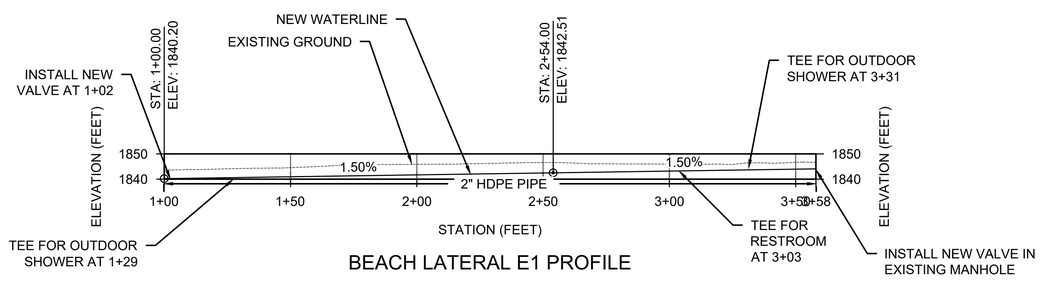

BEACH LATERAL E1 PROFILE

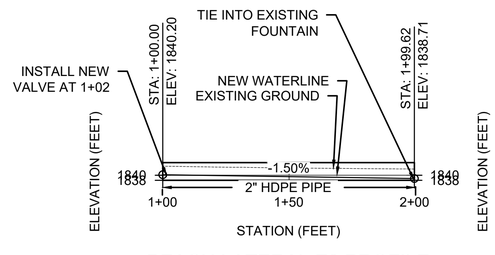

BEACH LATERAL E3 PROFILE

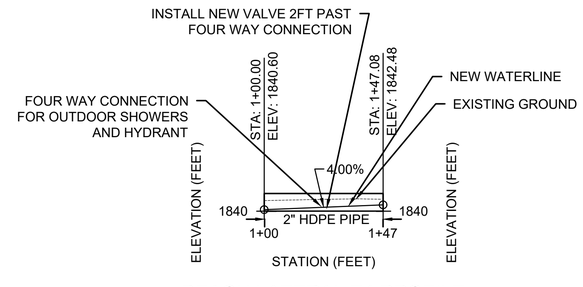

BEACH LATERAL E4 PROFILE

USDA FOREST SERVICE

United States Department of Agriculture
Forest Service

(R08)
SOUTHERN REGION

STAMPS, LOGOS, AND SEALS

NO.	REVISION / ISSUE	DATE
4		
3		
2		
1		

PROJECT NAME

SHERANDO RECREATION AREA WATER SYSTEM REPLACEMENT

GEORGE WASHINGTON & JEFFERSON NATIONAL FORESTS

GLENWOOD/PEDLAR RANGER DISTRICTS

DRAWING TITLE

BEACH AREA

DATE 11/19/2024	ARCHIVE NO.
DESIGNER A. FOX	DRAWING SHEET NO. CU-18
DRAWN A. FOX	
CHECKED D. KIMBALL	
PROJECT NO.	SHEET 020 OF 030

6/28/26 13:48 RORY.MULLENNEX C:\USERS\RORYMULLENNEX\APPDATA\LOCAL\BOX\BOX EDIT\DOCUMENTS\HUYYKZGLALEKQN3EPRPDDBW==\SHERANDO WATER SYSTEM.DWG;

POINT TABLE

POINT #	NORTHING	EASTING
100	6653156.72	11336202.64
101	6653148.93	11336204.52
102	6653178.38	11336218.82
103	6653203.28	11336193.17
104	6653188.42	11336195.97
105	6653681.01	11336104.40
106	6653624.29	11336114.25
107	6653691.91	11336102.79
108	6653713.37	11336038.14
109	6653716.41	11336028.97
110	6653754.98	11335959.79
111	6653762.90	11335945.62
112	6653801.39	11335876.79
113	6653811.52	11335858.59
114	6653790.59	11335774.26
115	6653695.06	11335666.56
116	6653683.20	11335643.33
117	6653682.69	11335641.03
118	6653675.88	11335610.49
119	6653664.04	11335557.35
120	6653556.42	11335268.50
121	6653542.07	11335127.94
122	6653540.36	11335101.20
123	6653532.74	11335081.06
124	6653528.67	11335065.03
125	6653537.44	11335038.35
126	6653534.49	11335026.81
127	6653507.61	11334921.56
128	6653506.18	11334827.00
129	6653510.29	11334780.26
130	6653513.42	11334744.69
131	6653511.06	11334673.68
132	6653518.09	11334592.36
133	6653516.20	11334576.90
134	6653505.78	11334494.92
135	6653495.74	11334435.87
136	6653494.58	11334429.02
137	6653489.97	11334421.21
138	6653486.85	11334414.17
139	6653478.47	11334395.20
140	6653463.44	11334260.83
141	6653423.26	11334248.81
142	6653423.05	11334246.98
143	6653413.52	11334163.69
144	6653465.18	11334103.57

POINT TABLE

POINT #	NORTHING	EASTING
145	6653475.51	11334093.61
146	6653557.02	11334015.33
147	6653605.87	11333968.35
148	6653651.16	11333922.77
149	6653721.42	11333850.29
150	6653741.61	11333829.45
151	6653758.74	11333811.78
152	6653762.61	11333809.63
153	6653779.23	11333800.40
154	6653809.53	11333783.55
155	6653851.24	11333755.39
156	6653881.77	11333734.77
157	6653978.56	11333668.94
158	6654017.68	11333643.01
159	6654013.22	11333632.27
160	6654019.23	11333629.36
161	6654011.42	11333627.94
162	6653989.35	11333554.98
163	6653982.80	11333455.03
164	6653983.91	11333451.46
165	6653964.29	11333445.03
166	6653909.50	11333416.60
167	6654057.27	11333748.96
168	6654080.94	11333763.70
169	6654100.86	11333758.87
170	6654139.89	11333749.42
171	6654152.45	11333745.07
172	6654164.67	11333740.76
173	6654202.01	11333727.01
174	6654233.90	11333715.58
175	6654221.91	11333628.09
176	6654216.80	11333629.02
177	6654189.17	11333532.72
178	6654185.35	11333534.38
179	6654180.45	11333520.29
180	6654109.59	11333419.32
181	6654107.48	11333421.53
182	6653587.29	11333842.76
183	6653581.48	11333803.50
184	6653576.34	11333768.70
185	6653617.13	11333728.71
186	6653629.83	11333734.45
187	6653613.98	11333716.60
188	6653511.85	11333808.17
189	6653495.32	11333789.93

POINT TABLE

POINT #	NORTHING	EASTING
190	6653442.83	11333732.00
191	6653440.10	11333729.42
192	6653422.89	11333766.67
193	6653677.92	11334007.75
194	6653695.91	11334016.41
195	6653711.71	11334025.43
196	6653712.90	11334026.12
197	6653731.98	11334037.74
198	6653761.67	11334055.76
199	6653790.06	11334062.97
200	6653810.55	11334068.05
201	6653763.08	11334059.89
202	6653718.14	11334046.49
203	6653738.56	11334001.44
204	6653780.05	11333964.07
206	6653702.90	11333979.67
207	6653435.32	11334238.89
208	6653554.57	11334467.73
209	6653569.53	11334459.39
210	6653625.94	11334427.96
211	6653637.26	11334401.12
212	6653447.74	11334546.27
213	6653444.53	11334544.83
214	6653374.43	11334540.01
215	6653344.74	11334498.73
216	6653516.02	11334914.36
217	6653505.02	11335006.29
218	6653590.33	11335210.69
219	6653653.45	11335181.52
220	6653810.05	11335850.68
221	6653815.98	11335853.78
222	6653801.45	11335816.76
223	6653797.42	11335815.85
224	6653880.98	11335782.85
225	6653905.46	11335756.14
226	6653977.25	11335678.05
227	6653997.00	11335655.42
228	6654017.66	11335632.52
229	6654080.11	11335560.20
230	6654084.66	11335545.56
231	6654090.26	11335527.53
232	6654103.14	11335486.12
233	6654111.95	11335475.71
234	6654148.85	11335463.09
235	6654170.30	11335456.35

POINT TABLE

POINT #	NORTHING	EASTING
236	6654112.67	11335453.59
237	6654114.02	11335409.69
238	6654114.35	11335398.95
239	6654114.58	11335396.71
240	6654117.93	11335362.19
241	6654125.37	11335290.32
242	6654067.42	11335363.60
243	6654014.84	11335373.90
244	6654012.23	11335368.49
245	6654011.91	11335421.92
246	6654054.71	11335708.63
247	6654117.57	11335784.88
248	6654122.27	11335785.38
249	6654175.41	11335790.16
250	6653791.46	11336171.89
251	6653793.81	11336173.08
252	6653863.22	11336204.89
253	6653889.50	11336216.96
254	6653922.35	11336232.03
255	6653944.38	11336242.18
256	6653978.99	11336258.08
257	6653985.81	11336258.21
258	6654037.81	11336259.24
259	6654124.68	11336260.96
260	6654113.87	11336260.74
261	6654180.61	11336262.06
262	6654215.95	11336262.76
263	6654270.38	11336263.83
264	6654272.96	11336263.54
265	6654278.90	11336262.87
266	6654388.39	11336250.30
267	6654407.19	11336248.35
268	6654458.06	11336312.29
269	6654507.96	11336375.01
270	6654594.92	11336463.99
271	6654596.28	11336466.12
272	6654641.48	11336536.90
273	6654626.83	11336515.26
274	6654659.00	11336558.81
275	6654691.90	11336597.37
276	6654690.98	11336596.46
277	6654734.74	11336613.85
278	6654694.64	11336608.41
279	6654670.31	11336767.74
280	6654768.00	11336569.06

POINT TABLE

POINT #	NORTHING	EASTING
281	6654753.09	11336620.16
282	6654789.21	11336630.13
283	6654810.47	11336654.15
284	6654813.00	11336657.00
285	6654816.57	11336656.99
286	6654938.30	11336656.24
287	6654939.76	11336655.00
288	6654952.94	11336643.90
289	6654970.40	11336629.18
290	6655011.87	11336673.69
291	6654816.66	11336664.65
292	6654816.56	11336676.49
293	6654775.21	11336717.61
294	6654471.32	11336267.92
295	6654482.12	11336250.73
296	6654504.38	11336241.26
297	6654510.46	11336543.72
298	6654493.24	11336560.01
299	6654480.80	11336571.86
300	6654350.24	11336107.37
302	6654345.58	11336055.69
303	6654343.34	11336023.27
304	6654316.20	11336355.65
305	6654318.22	11336362.76
306	6654050.28	11336311.75
307	6654055.19	11336332.41
308	6653802.29	11336114.24
309	6653795.62	11336186.64
310	6653657.93	11336133.07
311	6653656.37	11336165.24
312	6653655.32	11336186.81
313	6653706.64	11336317.07
314	6653734.53	11336349.33
315	6653737.86	11336397.26
316	6653743.87	11336484.36
317	6653731.43	11336555.81
318	6653716.43	11336642.00
319	6653724.95	11336192.80
320	6653801.04	11336292.62
321	6653808.22	11336276.75
322	6653807.51	11336301.00
323	6653776.23	11336260.07
324	6653829.10	11336470.48
325	6653827.02	11336471.78
326	6653900.21	11336564.98

POINT TABLE

POINT #	NORTHING	EASTING
327	6653907.04	11336574.07
328	6653928.07	11336602.02
329	6653936.36	11336613.03
330	6653974.22	11336663.35
331	6653979.89	11336673.28
332	6654025.61	11336753.41
333	6654044.54	11336781.71
334	6654113.84	11336885.35
335	6654207.72	11337025.76
336	6654317.22	11337189.51
337	6654381.54	11337285.71
338	6654415.22	11337324.80
339	6654421.70	11337332.32
341	6654507.00	11337339.58
342	6654507.24	11337310.79
343	6654508.29	11337185.47
344	6654508.42	11337170.99
345	6654494.68	11337155.58
346	6654482.21	11337150.66
347	6654462.12	11337142.72
348	6654458.30	11337148.23
349	6654507.40	11337439.19
350	6654485.59	11337299.12
351	6654467.79	11337289.20
352	6654803.81	11336646.62

United States Department of Agriculture
Forest Service

(R08)
SOUTHERN REGION

STAMPS, LOGOS, AND SEALS

NO.	REVISION / ISSUE	DATE
4		
3		
2		
1		

PROJECT NAME

SHERANDO RECREATION AREA WATER SYSTEM REPLACEMENT

GEORGE WASHINGTON & JEFFERSON NATIONAL FORESTS

GLENWOOD/PEDLAR RANGER DISTRICTS

DRAWING TITLE

POINT TABLES

DATE 11/19/2024
ARCHIVE NO.
DESIGNER A. FOX
DRAWN A. FOX
CHECKED D. KIMBALL
PROJECT NO.
DRAWING SHEET NO. CU-19
SHEET 021 OF 030

6/28/26 13:48 RORYMULLENNEX C:\USERS\RORYMULLENNEX\APPDATA\LOCAL\BOX\BOX EDIT\DOCUMENTS\HUYHZGLALEKQN3EPRPODBW==\SHERANDO WATER SYSTEM.DWG;

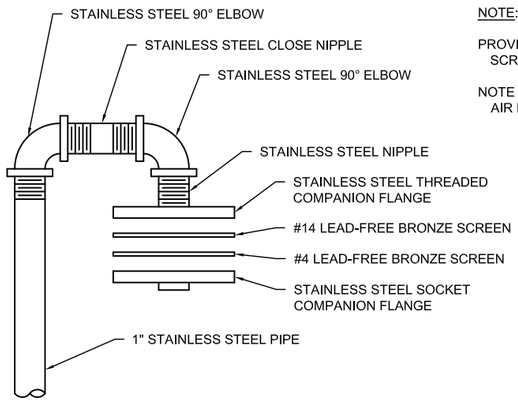

NOTE:

PROVIDE STAINLESS STEEL BOLTS FOR RODENT SCREEN ASSEMBLY.

NOTE DIFFERENT SCREENING IS USED FOR PRV AND AIR RELIEF VENTS.

SCREENED VENT DETAIL

NOT TO SCALE

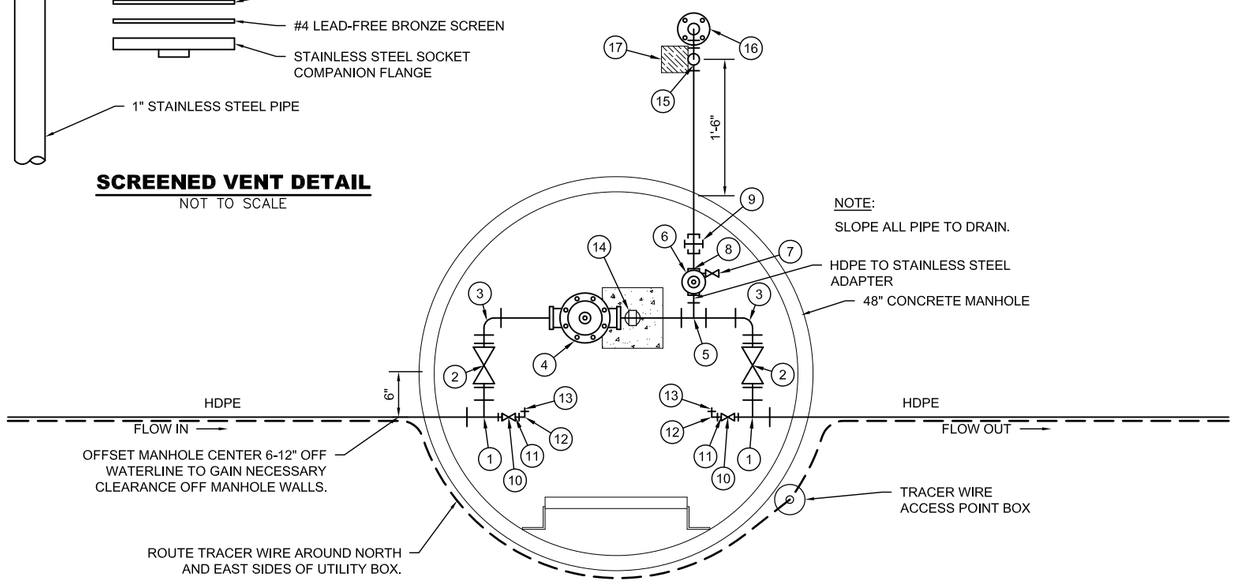

NOTE:

SLOPE ALL PIPE TO DRAIN.

PLAN VIEW (INTERIOR)

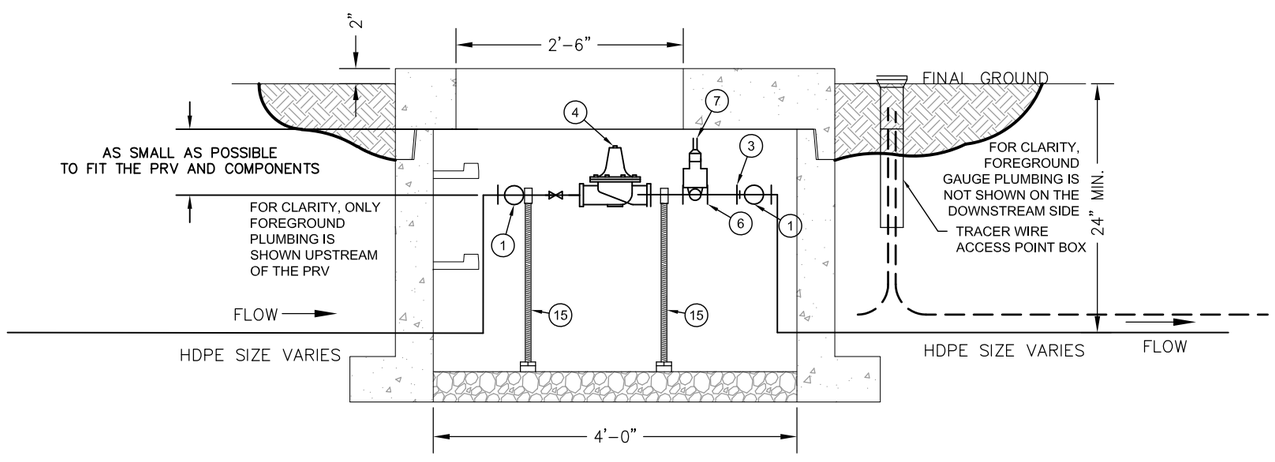

PROFILE

NOT TO SCALE

UTILITY VAULT KEY NOTES

ALL PIPE AND FITTINGS AND APPURTENANCES SHALL BE STAINLESS STEEL AND SHALL COMPLY WITH THE SPECIFICATIONS (PARTICULARLY DIVISION 22).

1. TEE W/ BUSHING(S) TO STEP DOWN TO 1/2" OUTLET TO GAUGE (SIZE VARIES - SEE SIZE SCHEDULE)
2. BALL VALVE (SIZE VARIES - SEE SIZE SCHEDULE)
3. 90-DEG ELBOW - SIZE AS REQUIRED BY ADJACENT PLUMBING
4. PRESSURE REDUCING VALVE (PRV), SET OUTLET PRESSURE AS SHOWN ON ON VALVE AND PIPE SIZE TABLE, BELOW. (SIZE AND MODEL VARY - SEE SIZE SCHEDULE)
5. TEE (SIZE VARIES - SEE SIZE SCHEDULE)
6. 3/4" PRESSURE RELIEF VALVE (SET TO RELEASE AS SHOWN IN SCHEDULE).
7. 1/4" NIPPLE AND DRAIN VALVE (BALL VALVE) ATTACHED TO OUTLET PORT OF PRESSURE RELIEF VALVE (FOR VENT PIPE DRAINAGE - NORMALLY CLOSED). SEE SPECIFICATION 221100.
8. 1" X 3/4" BUSHING IN PRESSURE RELIEF VALVE OUTLET.
9. 1" UNION
10. 1/2" BALL VALVE
11. 1/2" X 1/4" BUSHING IN BALL VALVE OUTLET
12. 1/4" 90-DEG ELBOW AND BRING PIPE TO WITHIN 18" OF THE SURFACE.
13. FEMALE QUICK CONNECTION TO ALLOW ANY UNIVERSAL PRESSURE GAUGE TO CONNECT.
14. PIPE STANCHION.
15. PIPE STANCHION
16. COMPANION FLANGE AND SCREEN ASSEMBLY (SEE SCREENED VENT DETAIL THIS SHEET.
17. 4" X 4" HDPE POST TO LOOK LIKE WOOD, SEE SPECIFICATION 133402. LOCATE POST SO THAT IT DOES NOT INTERFERE WITH OPERATION OF LID OR BLOCK ACCESS TO VAULT, AND SET ON OPPOSITE SIDE OF MANHOLE FROM ROAD.

UTILITY VAULT GENERAL NOTES

1. ADJUSTMENTS TO THE PIPING CONFIGURATION CAN BE MADE (INCLUDING ELEVATION CHANGES) AS LONG AS THE ORDER OF COMPONENTS STAYS THE SAME AND ALL PIPING AND COMPONENTS ARE SLOPED TO DRAIN. ENSURE ALL APPURTENANCES CAN BE ACCESSED FOR OPERATION/MAINTENANCE.
2. SET ALL BALL VALVES TO ENSURE FREE OPERATION WITHOUT THE HANDLE COMING IN CONTACT WITH MANHOLE WALLS, ADJACENT PLUMBING, OR OTHER OBSTRUCTIONS. ARRANGE ALL VALVES SO THAT HANDLE STOPS ARE LEVEL WITH OR ABOVE THE PIPE.
3. MOUNT PIPING AND APPURTENANCES 12" MIN. ABOVE THE GRAVEL BASE. ALL PIPES AND PLUMBING APPURTENANCES SHALL BE SECURE FROM MOVEMENT DURING NORMAL OPERATION. IF NECESSARY, USE PIPE SUPPORTS (UNISTRUT OR APPROVED EQUAL) AS NECESSARY TO SECURELY ATTACH PLUMBING TO WALLS OF UTILITY MANHOLE.
4. FILL ANNULAR SPACE BETWEEN WATER PIPES AND MANHOLE WALLS WITH "FOAM FILL" OR APPROVED EQUAL.

VALVE AND PIPE SIZE SCHEDULE

PRV #	SIZE	MODEL	THRU-PIPE	REGULATING VALVE SET	RELIEF VALVE SET
1	4"	*	4"	70	80 psi
2	4"	*	4"	80	90 psi
3	3"	*	3"	80	90 psi

*SEE SPECIFICATIONS, DIVISION 22.

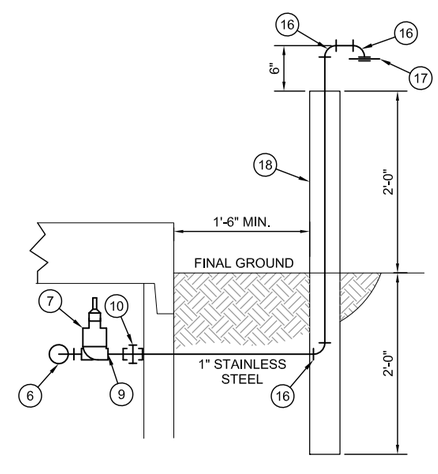

VENTING DETAIL

NOT TO SCALE

USDA FOREST SERVICE

United States Department of Agriculture
Forest Service

(R8)
SOUTHERN REGION

STAMPS, LOGOS, AND SEALS

NO.	REVISION / ISSUE	DATE
4		
3		
2		
1		

PROJECT NAME

SHERANDO RECREATION AREA WATER SYSTEM REPLACEMENT

GEORGE WASHINGTON & JEFFERSON NATIONAL FORESTS

GLENWOOD/PEDLAR RANGER DISTRICTS

DRAWING TITLE

PRESSURE REDUCING VALVE DETAIL

DATE 09/06/2024
ARCHIVE NO. #
DESIGNER A. FOX
DRAWN A. FOX
CHECKED D. KIMBALL
PROJECT NO. #
DRAWING SHEET NO. D-01
SHEET 021 OF 030

6/28/26 13:34 RORY.MULLENNEX C:\USERS\RORYMULLENNEX\APPDATA\LOCAL\BOX\BOX EDIT\DOCUMENTS\2NGV0W_X50CANPX0HLC8TG=#1 - PRV DETAIL.DWG;

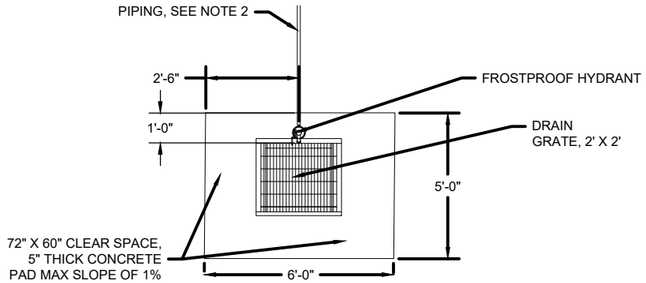

HYDRANT PAD DETAIL

NO SCALE

NOTES:

1. TYPE B HYDRANTS: ALL HOST SITE LOCATIONS AS SPECIFIED IN THE DRAWINGS.
   TYPE A HYDRANTS: ALL OTHER LOCATIONS.
   TYPE A & B HYDRANTS ARE DEFINED IN SPECIFICATION DIVISION 22.
   TYPE A AND B: 12" BURY DEPTH, 12" RESERVOIR DEPTH FOR A TOTAL OF 24" OVERALL DEPTH. EXCEPTION AT OFFICE HYDRANT WHERE OVERALL DEPTH SHALL BE 36" WITH 24" BURY DEPTH.
2. TYPE A HYDRANTS SHALL INCLUDE GRATE AND CONCRETE PAD AS SHOWN ON THIS DETAIL.
   TYPE B HYDRANTS SHALL ONLY INCLUDE THE HYDRANT COMPACTED WITH NATIVE FILL SURROUNDING THE BASE.
3. ALIGN THE PIPING AT BOTTOM OF HYDRANT AS NECESSARY TO OBTAIN PROPER ORIENTATION OF HYDRANT AS SHOWN ON THE WATER SYSTEM DRAWINGS.
4. HYDRANT LOCATION SHALL BE AS STAKED IN THE FIELD OR AS SHOWN ON THE DRAWINGS. ALTER HYDRANT LOCATION OR PAD SIZE ONLY WITH APPROVAL FROM THE CONTRACTING OFFICER.
5. HYDRANT PADS MAY BE IN CUT OR FILL ALONG SIDE OF ROADWAY. CUT AND FILL SLOPES SHALL MATCH ADJACENT ROADSIDE SLOPES.
6. ENSURE HYDRANT LATERALS DRAIN BACK TO THE MAIN LINE AT 1.5% MINIMUM. IN SOME AREAS, THE MAIN LINE AND HYDRANT LATERAL INVERTS MAY NEED TO BE DEEPER THAN 36 INCHES TO ENSURE PROPER DRAINAGE. HYDRANT CONNECTIONS ARE EXPECTED TO BE APPROX. 24-36 INCHES BELOW FINISHED GROUND
7. THE DRAIN GRATE, CONCRETE, GEOTEXTILE, AND DRAIN ROCK INFILL SHALL BE CONSIDERED INCIDENTAL TO THE INSTALLATION OF THE NEW HYDRANTS AND AS SUCH, NO ADDITIONAL PAYMENT SHALL BE MADE FOR THESE ITEMS.
8. ALL PIPE, HYDRANT FITTINGS, AND CONNECTIONS SHALL BE CONSIDERED INCIDENTAL TO THE INSTALLATION OF THE NEW HYDRANTS AND AS SUCH, NO ADDITIONAL PAYMENT SHALL BE MADE FOR THESE ITEMS.

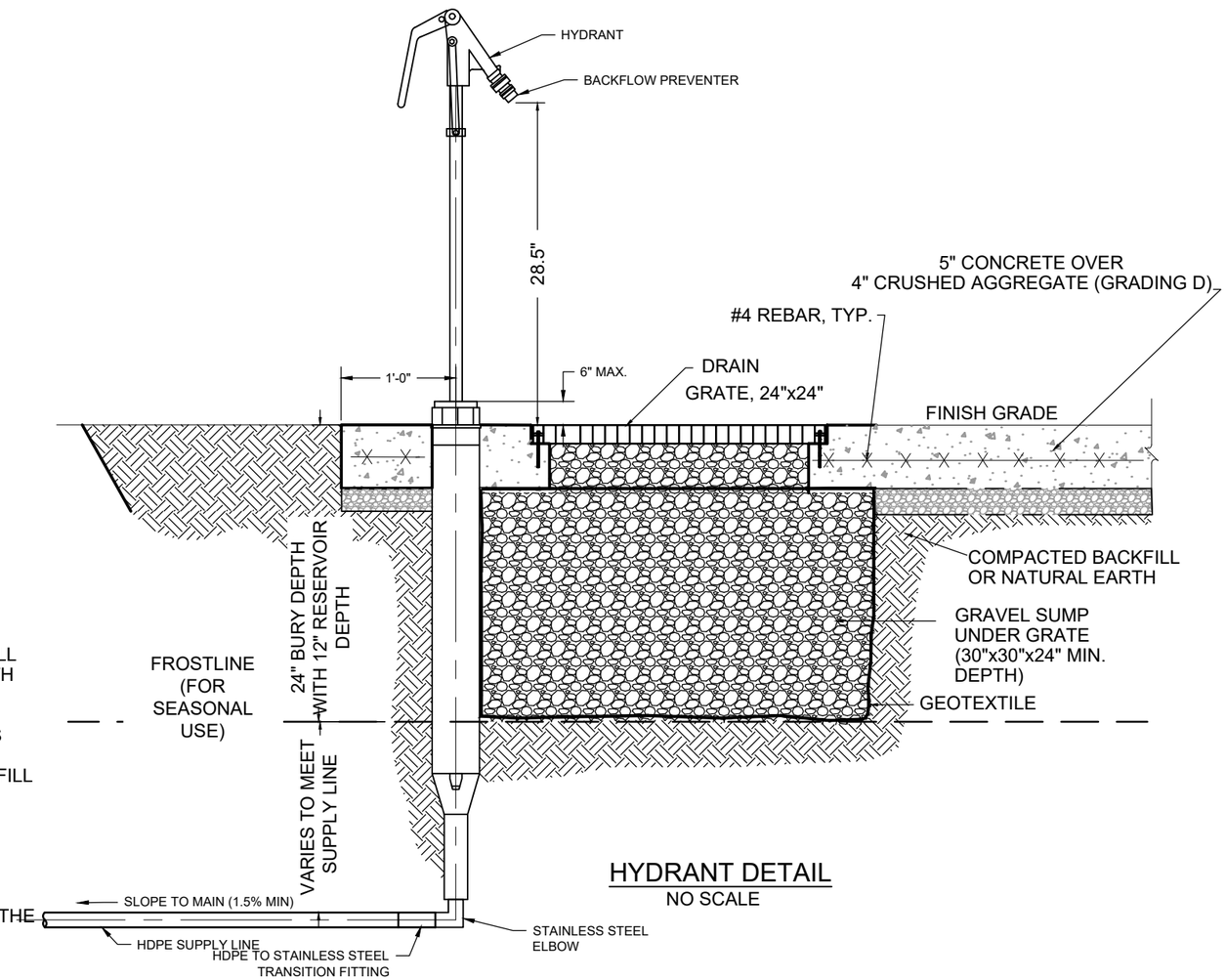

HYDRANT DETAIL

NO SCALE

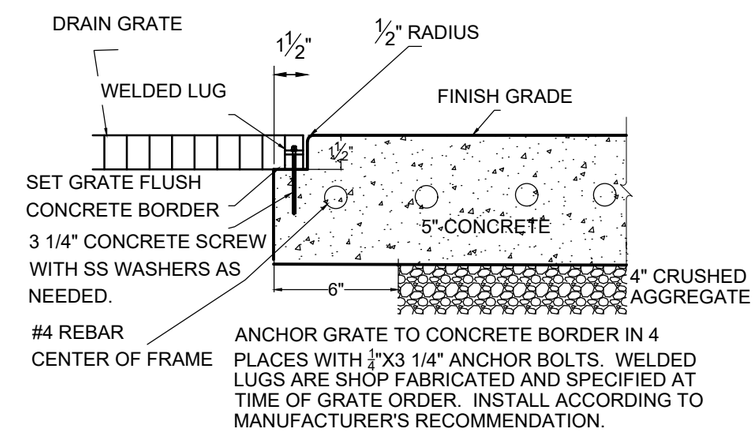

GRATE DETAIL

NO SCALE

USDA FOREST SERVICE

United States Department of Agriculture
Forest Service

(R8)
SOUTHERN REGION

STAMPS, LOGOS, AND SEALS

NO.	REVISION / ISSUE	DATE
4		
3		
2		
1		

PROJECT NAME

SHERANDO RECREATION AREA WATER SYSTEM REPLACEMENT

GEORGE WASHINGTON & JEFFERSON NATIONAL FORESTS

GLENWOOD/PEDLAR RANGER DISTRICTS

DRAWING TITLE

WATER HYDRANT DETAIL

DATE 09/06/2024	ARCHIVE NO. #
DESIGNER A. FOX	DRAWING SHEET NO. D-02
DRAWN A. FOX	
CHECKED D. KIMBALL	
PROJECT NO. #	SHEET 022 OF 030

6/28/26 13:52 RORYMULLENNEX C:\USERS\RORYMULLENNEX\APPDATA\LOCAL\BOX\BOX EDIT\DOCUMENTS\AFLYEL\VDKA3EAGRNKVHDG=\2 - WATER HYDRANT DETAIL.DWG;

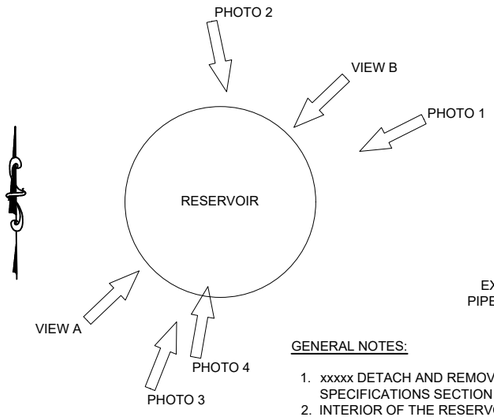

PHOTO 1

PHOTO 2

PHOTO 3

PHOTO 4

GENERAL NOTES:

1. xxxxx DETACH AND REMOVE EXISTING INTERIOR LADDER. INSTALL NEW INTERIOR LADDER IN ACCORDANCE WITH SPECIFICATIONS SECTION ____ xxxxx
2. INTERIOR OF THE RESERVOIR SHALL BE CLEANED AND COATED PER SPECIFICATIONS SECTION 099013 AFTER NEW INTERIOR LADDER, SUPPLY PIPE, AND BRACKETS ARE FULLY INSTALLED.
3. EXTERIOR OF TANK SHALL BE CLEANED AND PAINTED PER SPECIFICATIONS TO MATCH EXISTING PAINT COLOR AFTER SUPPLY PIPE AND BRACKETS ARE FULLY INSTALLED.
4. CONTRACTOR SHALL PROVIDE AND REPLACE ALL RESERVOIR SEALS, INCLUDING UPPER MANWAY AND LOWER MANWAY.
5. CONTRACTOR SHALL REMOVE EXISTING PRESSURE GAUGE LOCATED ON THE RESERVOIR DRAIN RESERVOIR TANK AND PROVIDE AND INSTALL A 0-20FT LIQUID LEVEL ALTITUDE PRESSURE GAUGE AS MANUFACTURED BY WINTERS, OR EQUIVALENT. SEE PHOTO 2, THIS SHEET.

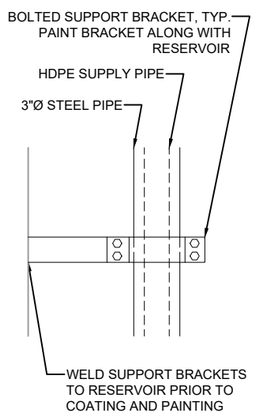

DETAIL 2

(N.T.S.)

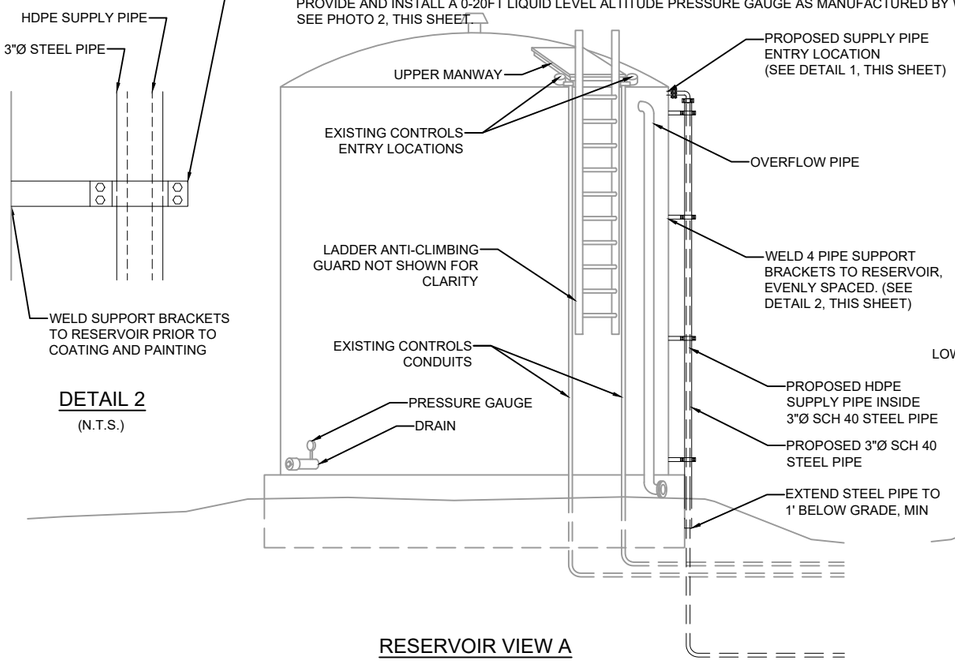

RESERVOIR VIEW A

(AS VIEWED FROM SOUTHWEST)

(N.T.S.)

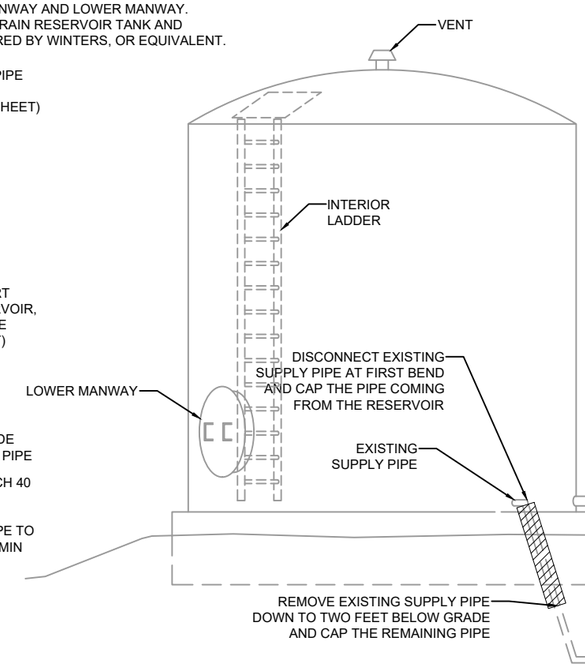

RESERVOIR VIEW B

(AS VIEWED FROM NORTHEAST)

(N.T.S.)

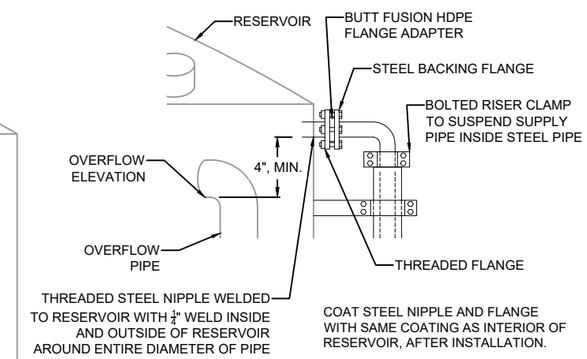

DETAIL 1

(N.T.S.)

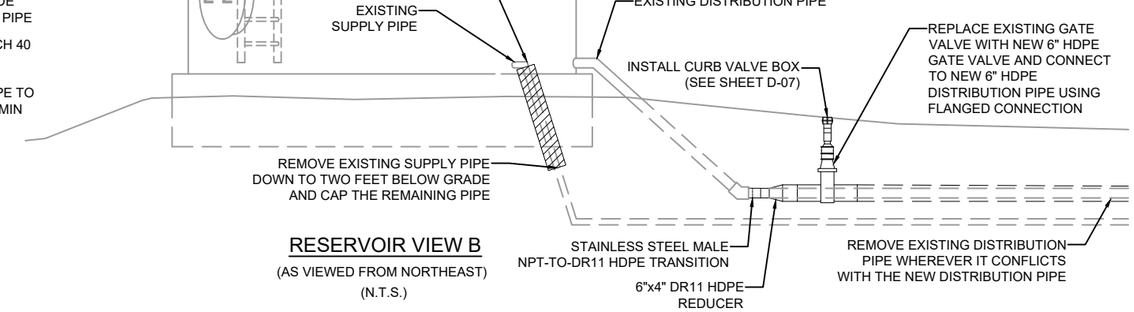

WELL PUMPS CONTROL AND RESERVOIR MONITORING NOTES:

1. THERE ARE TWO WELLS THAT SUPPLY WATER TO THE RESERVOIR; THE LOOP A WELL, AND THE WILLIAMS BRANCH WELL.
2. THE CONTRACTOR SHALL PROVIDE AND INSTALL A NEW AUTOMATED CONTROL SYSTEM FOR THE WELL PUMPS. THE CONTROL SYSTEM SHALL USE SOLID-STATE LOW-VOLTAGE LIQUID LEVEL RELAYS TO CONTROL THE WATER LEVEL IN THE RESERVOIR AND TO INDICATE HIGH AND LOW ALARM LEVELS. PUMP CONTROL LEVELS SHALL CONSIST OF "LEAD ON", "LAG ON", AND "OFF". THE LEAD PUMP SHALL ALTERNATE FOR EACH OPERATION CYCLE. CONTRACTOR SHALL COORDINATE WITH C.O.R. TO DETERMINE THE CONTROL AND ALARM ELEVATIONS. THE CENTRAL CONTROL PANEL FOR BOTH WELLS SHALL BE LOCATED INSIDE THE LOOP A WELL HOUSE. THE CONTROL SYSTEM SHALL BE AMERICAN MANUFACTURING COMPANY INC. STORAGE CONTROLS "S" SERIES, OR EQUIVALENT.
5. INSTALL THE WIRING FOR NEW PUMP CONTROL SYSTEM IN THE EXISTING CONDUITS BETWEEN THE RESERVOIR AND THE WILLIAMS BRANCH WELL HOUSE IF POSSIBLE. THE CONTRACTOR SHALL PROVIDE BID PRICING FOR AN OPTION ITEM FOR INSTALLING NEW CONDUITS BETWEEN THE RESERVOIR AND THE WILLIAMS BRANCH WELL HOUSE IN CASE THE EXISTING CONDUITS ARE INADEQUATE OR UNUSABLE.
6. THE CONTRACTOR SHALL PROVIDE AND INSTALL NEW BURIED CONDUIT AND WIRING FOR THE WELL PUMPS CONTROL SYSTEM BETWEEN THE WILLIAMS BRANCH WELL HOUSE AND THE LOOP A WELL HOUSE.
7. THE CONTRACTOR SHALL PROVIDE AND INSTALL A MONITORING SYSTEM THAT INDICATES THE DEPTH OF WATER IN THE RESERVOIR. THE SYSTEM DISPLAY/READ-OUT SHALL BE LOCATED IN THE LOOP A WELL HOUSE. THE SYSTEM SHALL BE DURABLE, FREEZE-PROOF, AND APPROPIATE FOR THE APPLICATION AND ALL WEATHER CONDITIONS.
8. CONTRACTOR SHALL PROVIDE AND INSTALL A SYSTEM SWITCH TO ENABLE OPERATION OF THE LOOP A WELL PUMP INDEPENDENTLY FROM THE AUTOMATED PUMPS CONTROL SYSTEM. DURING WINTER MONTHS THE PUMP SHALL PROVIDE WATER TO THE RESIDENCE AND SHALL BE CONTROLLED BY THE PRESSURE SWITCH IN THE PRESSURE TANK IN THE WELL HOUSE. CONTRACTOR SHALL OBTAIN C.O.R. APPROVAL OF CONTRACTOR'S PROPOSED SWITCH.

United States Department of Agriculture
Forest Service

RESERVOIR DETAIL
SOUTHERN REGION

STAMPS, LOGOS, AND SEALS

NO.	REVISION / ISSUE	DATE
4		
3		
2		
1		

PROJECT NAME

SHERANDO RECREATION AREA WATER SYSTEM REPLACEMENT

GEORGE WASHINGTON & JEFFERSON NATIONAL FORESTS

GLENWOOD/PEDLAR RANGER DISTRICTS

DRAWING TITLE

RESERVOIR DETAIL

DATE 11/19/2024	ARCHIVE NO. #
DESIGNER A. FOX	DRAWING SHEET NO. D-03
DRAWN A. FOX	
CHECKED D. KIMBALL	
PROJECT NO. #	SHEET 024 OF 030

6/28/26 15:20 RORY.MULLENNEX C:\USERS\RORYMULLENNEX\APPDATA\LOCALIBOX\BOX EDIT\DOCUMENTS\RGFMA8AJWUQCDJQORVCAFA==\3 - D-03-04-05-06-09 CONCRETE MANHOLE WITH PLUMBING - ARV.DWG;

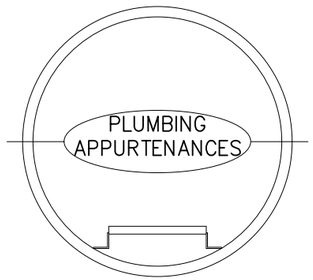

BOX PLAN

NOTES:

SUPPORT COMBINATION AIR VALVE, PIPE AND PLUMBING APPURTENANCES WITH UNISTRUT (OR EQUAL) AS REQUIRED. FINAL INSTALLATION TO BE STURDY AND SECURELY ATTACHED TO MAHOLE WALLS.

1. 4'-0" DIA. MANHOLE WITH CAST-IN STEPS
2. 2'-6" DIA. CIRCULAR STEEL LID
3. 6" COMPACTED GRAVEL (GRADING D)
4. PIPE SIZE INLET X PIPE SIZE OUTLET" X 1" HDPE TEE. PIPE SHALL BE FULLY SUPPORTED
5. 1" HDPE/STAINLESS STEEL TRANSITION FITTING (BUTT FUSED HDPE SIDE WITH THREADED METAL SIDE
6. 1" STAINLESS STEEL BALL VALVE
7. 1" COMBINATION AIR VALVE
8. 1" GSP 90-DEG ELBOW
9. AIR VENT, SEE DETAIL ON SHEET D-01.
10. CORE DRILL MANHOLE WALL TO FIT PIPE (1-2" CLEARANCE ON ALL SIDES REQ.) AND SEAL WITH NEAT CEMENT GROUT. AS AN ALTERNATIVE, STANDARD SEWERLINE BOOTS AND PREFABRICATED HOLES MAY BE USED.
11. HDPE WATERLINE TO BE FULLY SUPPORTED BY COMPACTED GRAVEL
12. POLY CURB VALVE MATCHING SIZE OF HDPE THROUGH PIPE
13. 1" STAINLESS STEEL UNION

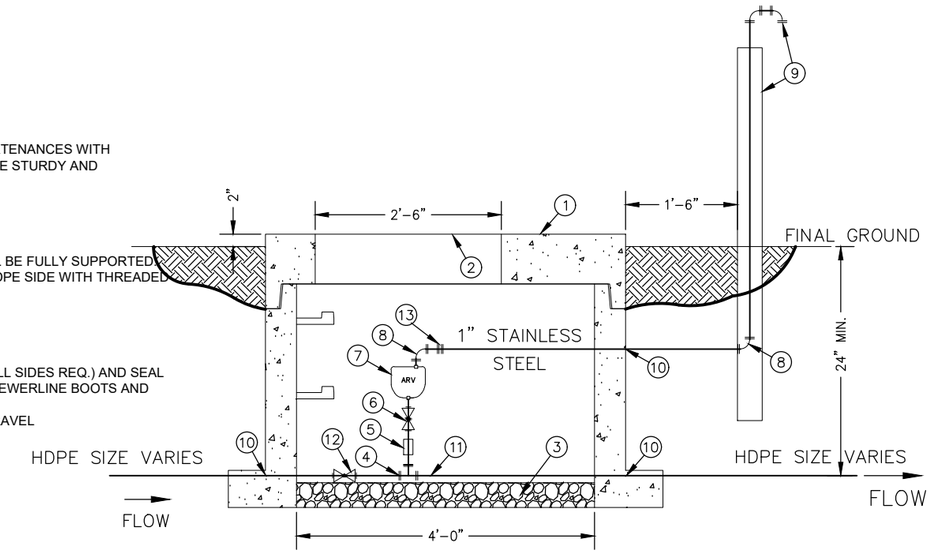

UTILITY BOX WITH COMBINATION AIR VALVE

NOT TO SCALE

BOX NOTES:

1. CORE DRILL MANHOLE WALL TO FIT PIPE (1-2" CLEARANCE ON ALL SIDES REQ.) AND SEAL WITH NEAT CEMENT OR SEWERLINE BOOTS.
2. GRADE ALL PIPE A MINIMUM OF 2% TO DRAIN.
3. PLUMBING APPURTENANCES SHALL BE SUPPORTED WITH CONCRETE BLOCK AND UNISTRUT (OR EQUAL) TO PREVENT PIPE MOVEMENT.

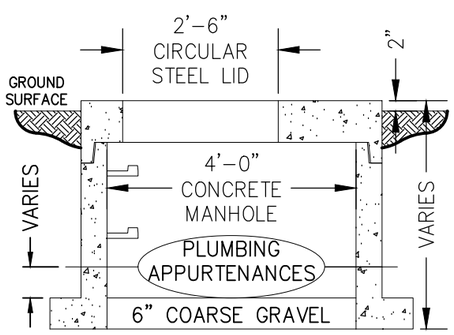

BOX PROFILE

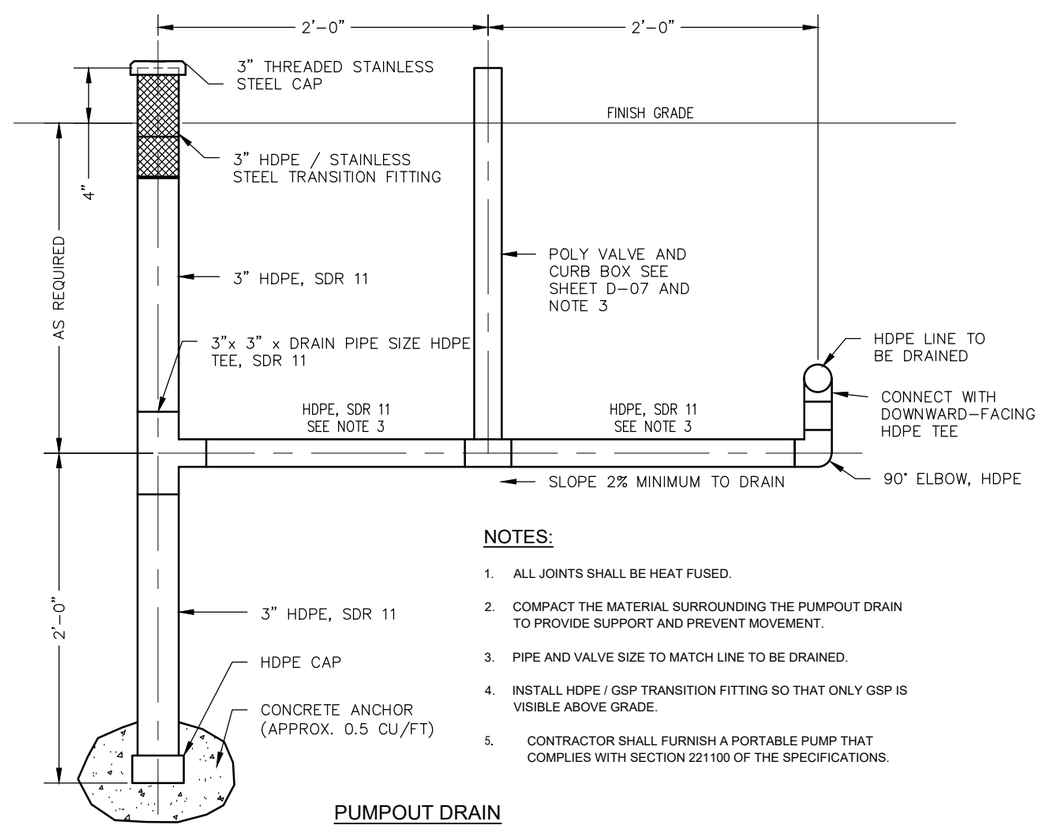

NOTES:

1. ALL JOINTS SHALL BE HEAT FUSED.
2. COMPACT THE MATERIAL SURROUNDING THE PUMPOUT DRAIN TO PROVIDE SUPPORT AND PREVENT MOVEMENT.
3. PIPE AND VALVE SIZE TO MATCH LINE TO BE DRAINED.
4. INSTALL HDPE / GSP TRANSITION FITTING SO THAT ONLY GSP IS VISIBLE ABOVE GRADE.
5. CONTRACTOR SHALL FURNISH A PORTABLE PUMP THAT COMPLIES WITH SECTION 221100 OF THE SPECIFICATIONS.

PUMPOUT DRAIN

United States Department of Agriculture
Forest Service

(R8)
SOUTHERN REGION

STAMPS, LOGOS, AND SEALS

NO.	REVISION / ISSUE	DATE
4		
3		
2		
1		

PROJECT NAME

SHERANDO RECREATION AREA WATER SYSTEM REPLACEMENT

GEORGE WASHINGTON & JEFFERSON NATIONAL FORESTS

GLENWOOD/PEDLAR RANGER DISTRICTS

DRAWING TITLE

ARV AND PUMPOUT DRAIN DETAIL

DATE 11/19/2024	ARCHIVE NO. #
DESIGNER A. FOX	DRAWING SHEET NO. D-04
DRAWN A. FOX	
CHECKED D. KIMBALL	
PROJECT NO. #	SHEET 025 OF 030

6/30/26 10:22 RORY.MULLENNEX C:\USERS\RORYMULLENNEX\APPDATA\LOCAL\BOX\BOX EDIT\DOCUMENTS\RGFMA8AJWUQCDJQORVCAFA==\3 - D-03-04-05-06-09 CONCRETE MANHOLE WITH PLUMBING - ARV.DWG;

UTILITY VAULT LEGEND AND NOTES:

UNLESS OTHERWISE NOTED, PIPING IS HDPE PIPE, ALL CONNECTIONS, VALVES, TEES, AND 90'S SHOULD BE HEAT FUSED. HDPE TO METAL CONNECTIONS ARE FLANGED CONNECTIONS UNLESS OTHERWISE CALLED OUT.

1. NEW CONCRETE UTILITY VAULT, APPROX. DIMENSIONS: 14' L X 8' W X 4'-8" DEEP
2. NEW METAIL LIDS X2, SPRING ASSISTED, APPROX. DIMENSIONS 6' X 6' MANUFACTURED BY HALLIDAY PRODUCTS MODEL #H2W7272 OR EQUIVALENT.
3. 4"X4"X4" TEE
4. 1.5"X1.5"X1.5x TEE
5. 4" GATE VALVE
6. 4"-3" REDUCER
7. 1.5" BALL VALVE
8. 4" PRESSURE REDUCING VALVE (PRV) #1, WITH THE FOLLOWING OPTIONS (AVAILABLE FROM MANUFACTURER):SEE DETAIL D-01 FOR CLOSER PRV DETAIL
   - 8.1. WYE STRAINER AT INLET
   - 8.2. PRESSURE GAUGE AT INLET, 0-150 PSI
   - 8.3. PRESSURE GAUGE AT OUTLET, 1-150 PSI
9. PRESSURE RELIEF VALVE WITH VENT (SEE DETAIL D-01 FOR VENT DETAIL)
10. HDPE/STAINLESS STEEL TRANSITION FITTING
11. 4" WATER METER
12. 1.5" WATER METER
13. FURNISH AND INSTALL TWO NEW LADDERS OR FORM INTO PRECAST VAULT
14. SAW CUT A 8-INCH WIDE X 5 FOOT LONG CHANNEL COMPLETELY THROUGH CONCRETE FLOOR OF BOX. REMOVE CONCRETE AND INSTALL WASHED GRAVEL TO ACT AS FLOOR DRAIN. IF THE PROPOSED SHAPE AND/OR DIMENSIONS ARE DIFFICULT TO CONSTRUCT DUE TO EQUIPMENT LIMITATIONS, THE CONTRACTOR MAY SUBMIT ALTERNATE DESIGNS FOR APPROVAL BY THE CONTRACTING OFFICER.
15. 6" TO 4" REDUCER JUST OUTSIDE OF VAULT
16. 3" GATE VALVE

EQUIPMENT LABELING LEGEND AND NOTES:

PLUMBING APPURTENANCES SHALL BE LABELED ACCORDING TO THE LEGEND BELOW. LABEL EACH APPURTENANCE WITH ENGRAVED METAL OR LAMINATED-PLASTIC NAME PLATE ATTACHED WITH A LONG LASTING ADHESIVE THAT IS APPROVED BY THE CONTRACTING OFFICER. MINIMUM LETTER SIZE OF 1" IN HEIGHT. TAG EQUIPMENT THAT LACKS A FLAT SURFACE ACCORDING TO THE SPECIFICATIONS. A LEGEND WITH ALPHABETICAL LABELING SHALL BE INSTALLED IN A VISIBLE LOCATION TO BE SEEN FROM OUTSIDE OF THE VAULT WHEN OPENING THE LID.

A. SUPPLY LINE FROM LOWER A LOOP WELL
B. SUPPLY LINE FROM WILLIAMS BRANCH WELL
C. SUPPLY LINE TO RESERVOIR
D. DISTRIBUTION LINE FROM RESERVOIR
E. BEACH MAINLINE
F. GROUP LOOP MAINLINE
G. LOWER A LOOP MAINLINE

GENERAL NOTES:

1. ALL PIPES AND PLUMBING APPURTENANCES SHALL BE SECURELY ATTACHED TO FLOOR OR WALLS OF UTILITY VAULT. USE PIPE SUPPORTS (UNISTRUT OR APPROVED EQUAL) AS NECESSARY TO PREVENT MOVEMENT OF PIPES DURING NORMAL OPERATION.
2. ALL VALVES SHALL HAVE A SUPPORT ATTACHED TO A CONCRETE BASE BLOCK TO ALLOW TORQUE TO PASS THROUGH TO THE CONCRETE RATHER THAN ON THE VALVE.
3. ALL PIPES AND PLUMBING SHALL BE INSTALLED TO DRAIN. ENSURE THE SYSTEM CAN BE COMPLETELY WINTERIZED EACH SEASON WITHOUT RISK OF DAMAGE FROM FREEZING. INSTALL ADDITIONAL DRAINS OR UNIONS IF NECESSARY.
4. FOREST SERVICE WILL PROVIDE LOCK FOR BOTH LIDS.
5. DO NOT INSTALL PRESSURE REDUCING VALVES OR ANY OTHER PLUMBING INTO THE UTILITY BOX UNTIL THE UPSTREAM WATERLINES HAVE BEEN FULLY FLUSHED OF DEBRIS ACCORDING TO THE SPECIFICATIONS.
6. VAULT AND HATCHES SHALL BE DESIGNED ACCORDING TO LOAD LEVEL 2 IN ASTM C1802-20.
5. CONTRACTOR SHALL PROVIDE THE FOLLOWING TO USFS IN NEW AND UNUSED CONDITION, WITH MANUFACTURER'S WARRANTY:
   - A. JACKMAN ROUGHNECK ELECTROFUSION PROCESSOR WITH SMARTSCANNER, MODEL ROUGHNECK972-1, WITH 120V ADAPTER INCLUDED.

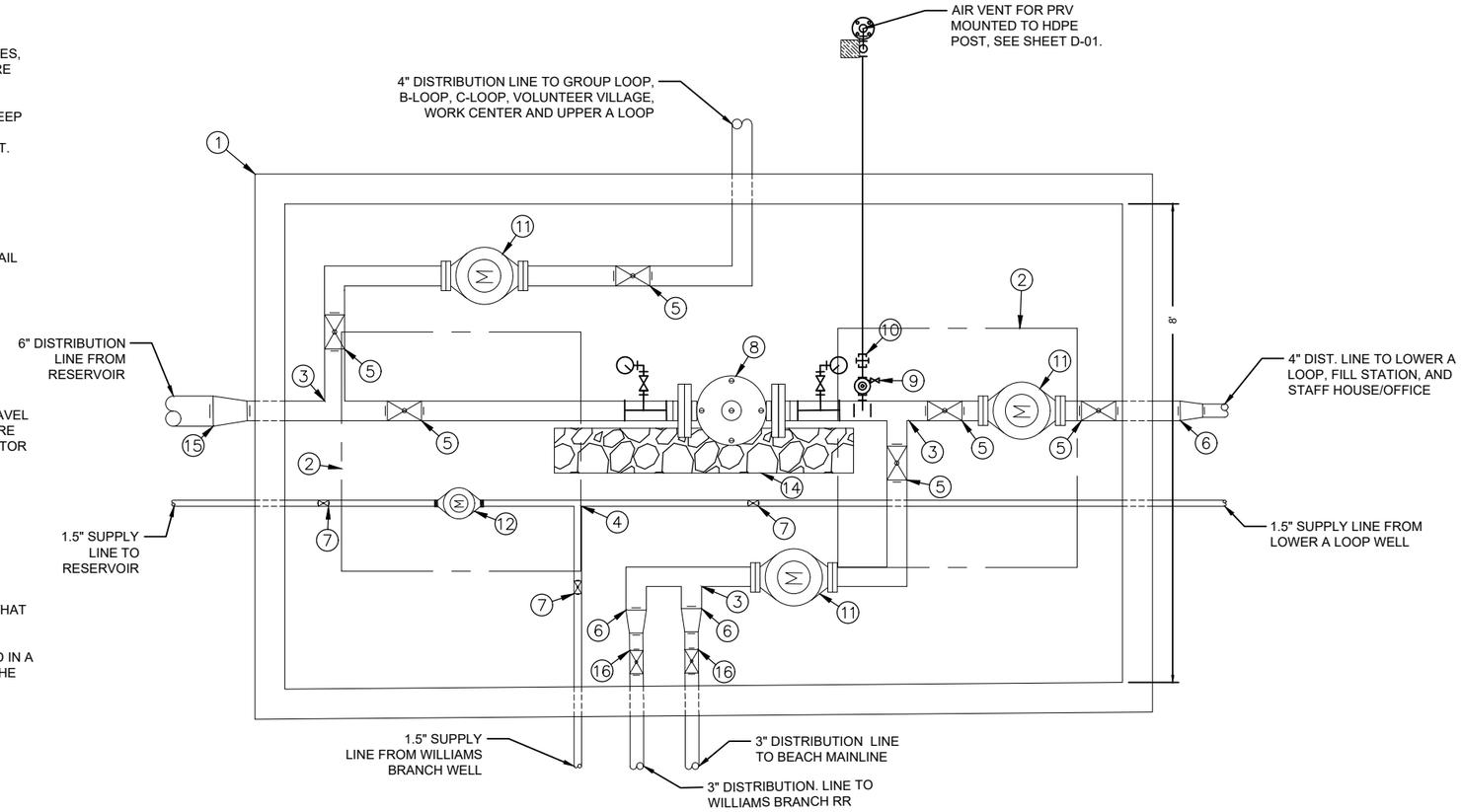

UTILITY VAULT (PLAN VIEW)

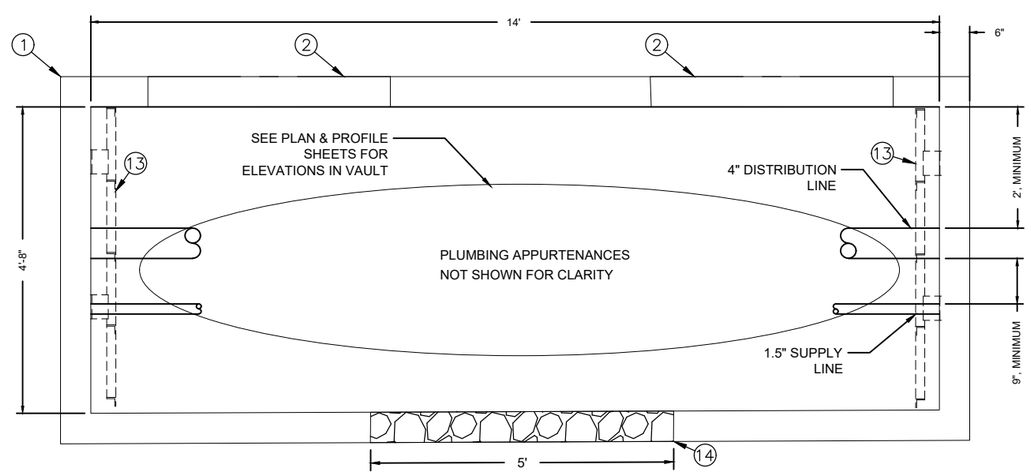

UTILITY VAULT (PROFILE VIEW)

USDA FOREST SERVICE

United States Department of Agriculture
Forest Service

(R8)
SOUTHERN REGION

STAMPS, LOGOS, AND SEALS

NO.	REVISION / ISSUE	DATE
4		
3		
2		
1		

PROJECT NAME

SHERANDO RECREATION AREA WATER SYSTEM REPLACEMENT

GEORGE WASHINGTON & JEFFERSON NATIONAL FORESTS

GLENWOOD/PEDLAR RANGER DISTRICTS

DRAWING TITLE

LARGE UTILITY BOX DETAIL

DATE 11/19/2024	ARCHIVE NO. #
DESIGNER A. FOX	DRAWING SHEET NO. D-05
DRAWN A. FOX	
CHECKED D. KIMBALL	
PROJECT NO. #	SHEET 026 OF 030

6/30/26 10:22 RORYWILLENNEX C:\USERS\RORYWILLENNEX\APPDATA\LOCAL\BOX\BOX EDIT\DOCUMENTS\RGFMA8AJWUQCDJQORVCAFA==\3 - D-03-04-05-06-09 CONCRETE MANHOLE WITH PLUMBING - ARV.DWG;

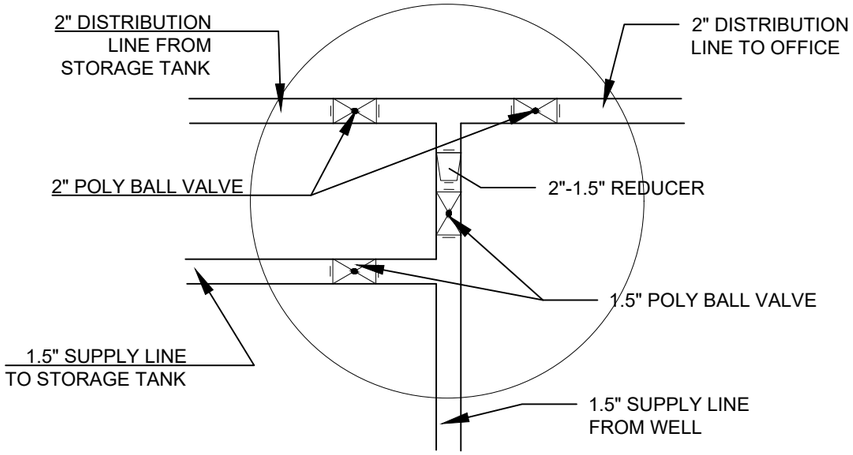

UTILITY VAULT (INSULATED) PLAN VIEW

NOT TO SCALE

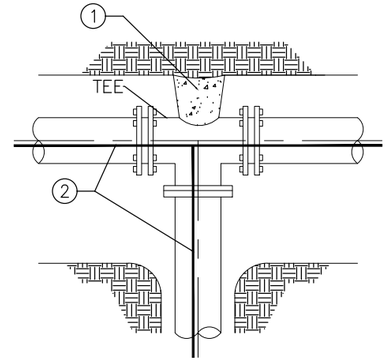

TEE DETAIL

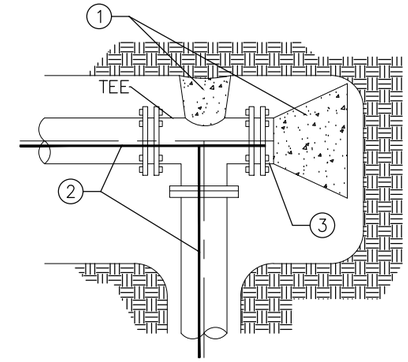

TEE AND PLUG DETAIL

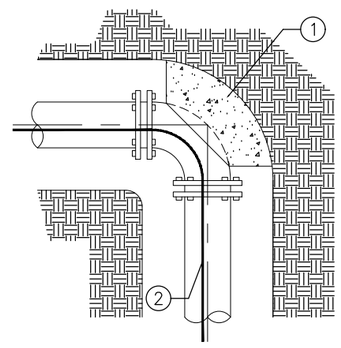

90° BEND DETAIL

LEGEND:

1. PROVIDE A MIN. 4 CUBIC FEET CONCRETE POURED AGAINST UNDISTURBED EARTH.
2. NO. 14 COPPER FINDER WIRE (IF USING NON-METALLIC PIPE).
3. PLUG.

NOTES:

SUPPORT PLUMBING APPURTENANCES WITH SPECIFIED POLY BRACKET (OR EQUAL). INSULATE VAULT PER SPECIFICATIONS.

1. DETAIL APPLIES TO SHEET CU-16 FOR INSULATED UTILITY VAULT.
2. 4'-0" DIA. CONCRETE MANHOLE WITH 2'-6" DIA. METAL LID
3. POLY BALL VALVE (VARYING SIZE)
4. 8" X 8" X 11" CONCRETE SUPPORT BLOCK UNDER VALVES WITH BRACKET BOLTED TO THE BLOCK.
5. 4" THICK SPRAY-ON "FOAM FILL" INSULATION. INSTALL ON INTERIOR OF MANHOLE AS SHOWN. CREATE "LIP" AT TOP OF INSULATION AREA TO SUPPORT RIGID STYROFOAM INSULATION ABOVE.
6. 4" THICK X 47" DIA. RIGID STYROFOAM INSULATION TO FIT TIGHTLY INSIDE OF VAULT. CONSTRUCT IN TWO PIECES, EACH THE SHAPE OF A HALF-CIRCLE, SO PIECES CAN BE REMOVED FROM VAULT FOR MAINTENANCE ACCESS. INSTALL ANCHOR BOLTS AND/OR SUPPORTS AS NECESSARY TO SUPPORT INSULATION ABOVE EXISTING PIPING.
7. 6" COMPACTED GRAVEL (GRADING D)

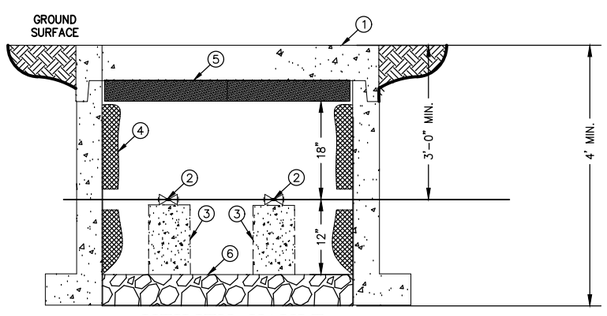

UTILITY VAULT (INSULATED)

NOT TO SCALE

MINIMUM THRUST BLOCK BEARING AREAS (SQ. FT.) *					
PIPE SIZE	TEE OR END	BENDS			
		90°	45°	22 1/2°	11 1/4°
4"	1.4	2.0	1.1	0.6	0.4
6"	2.8	4.0	2.2	1.6	1.0
8"	5.0	7.0	3.7	2.0	1.0
10"	8.0	10.3	5.6	2.9	1.0
12"	10.3	14.6	8.0	4.0	1.5

* BASED ON 150 P.S.I. MAIN PRESSURE AND 2000 P.S.F. SOIL BEARING PRESSURE.

NOTES:

1. COVER BOLTS AND FLANGES WITH PLASTIC TO PROTECT FROM CONCRETE ADHERENCE DURING CONSTRUCTION OF THRUST BLOCKS.
2. SEE CHART FOR MINIMUM THRUST BLOCKS BEARING AREAS.
3. ALL CONCRETE SHALL BE PLACED AGAINST UNDISTURBED EARTH.
4. PROVIDE 6 MIL. POLYPROPYLENE BETWEEN FITTINGS AND CONCRETE.
5. NOTIFY CONTRACTING OFFICER FOR ANY CONDITION OR PIPE SIZE NOT INDICATED.

THRUST BLOCKS

USDA FOREST SERVICE

United States Department of Agriculture
Forest Service

(R8)
SOUTHERN REGION

STAMPS, LOGOS, AND SEALS

NO.	REVISION / ISSUE	DATE
4		
3		
2		
1		

PROJECT NAME

SHERANDO RECREATION AREA WATER SYSTEM REPLACEMENT

GEORGE WASHINGTON & JEFFERSON NATIONAL FORESTS

GLENWOOD/PEDLAR RANGER DISTRICTS

DRAWING TITLE

INSULATED UTILITY BOX AND THRUST BLOCK DETAIL

DATE 11/19/2024	ARCHIVE NO. #
DESIGNER A. FOX	DRAWING SHEET NO. D-06
DRAWN A. FOX	
CHECKED D. KIMBALL	
PROJECT NO. #	SHEET 027 OF 030

6/28/26 15:20 RORY.MULLENNEX C:\USERS\RORY.MULLENNEX\APPDATA\LOCAL\BOX\BOX EDIT\DOCUMENTS\RGFM\A&A\INV\QCD\QOR\VGA\FA==\3 - D-03-04-05-06-09 CONCRETE MANHOLE WITH PLUMBING - ARV.DWG;

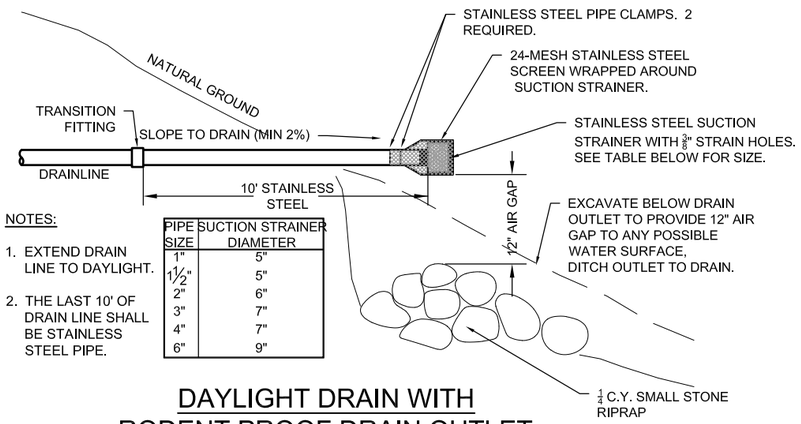

NOTES:

1. EXTEND DRAIN LINE TO DAYLIGHT.
2. THE LAST 10' OF DRAIN LINE SHALL BE STAINLESS STEEL PIPE.

PIPE SIZE	SUCTION STRAINER DIAMETER
1"	5"
1 1/2"	5"
2"	6"
3"	7"
4"	7"
6"	9"

DAYLIGHT DRAIN WITH RODENT PROOF DRAIN OUTLET

NO SCALE

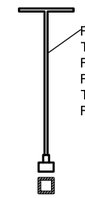

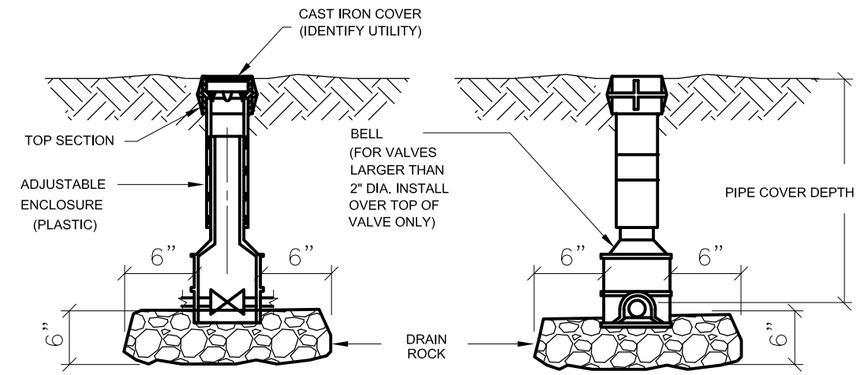

CURB VALVE BOX

(PLASTIC)

NO SCALE

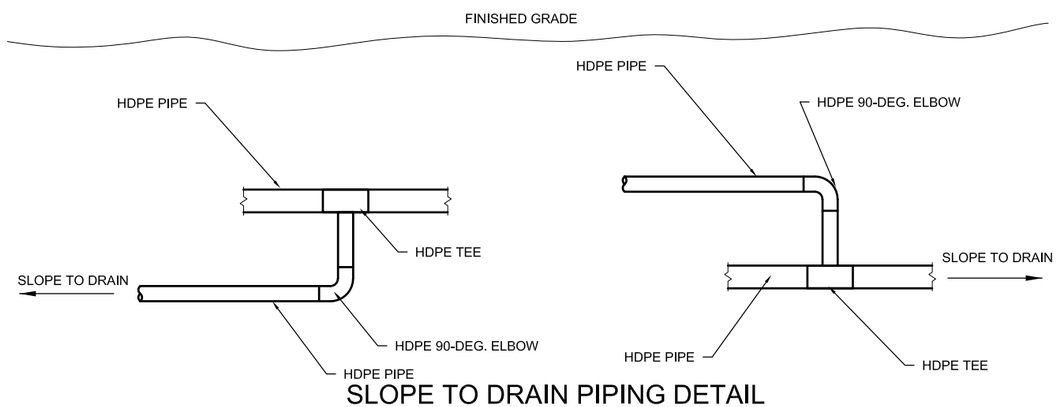

SLOPE TO DRAIN PIPING DETAIL

NO SCALE

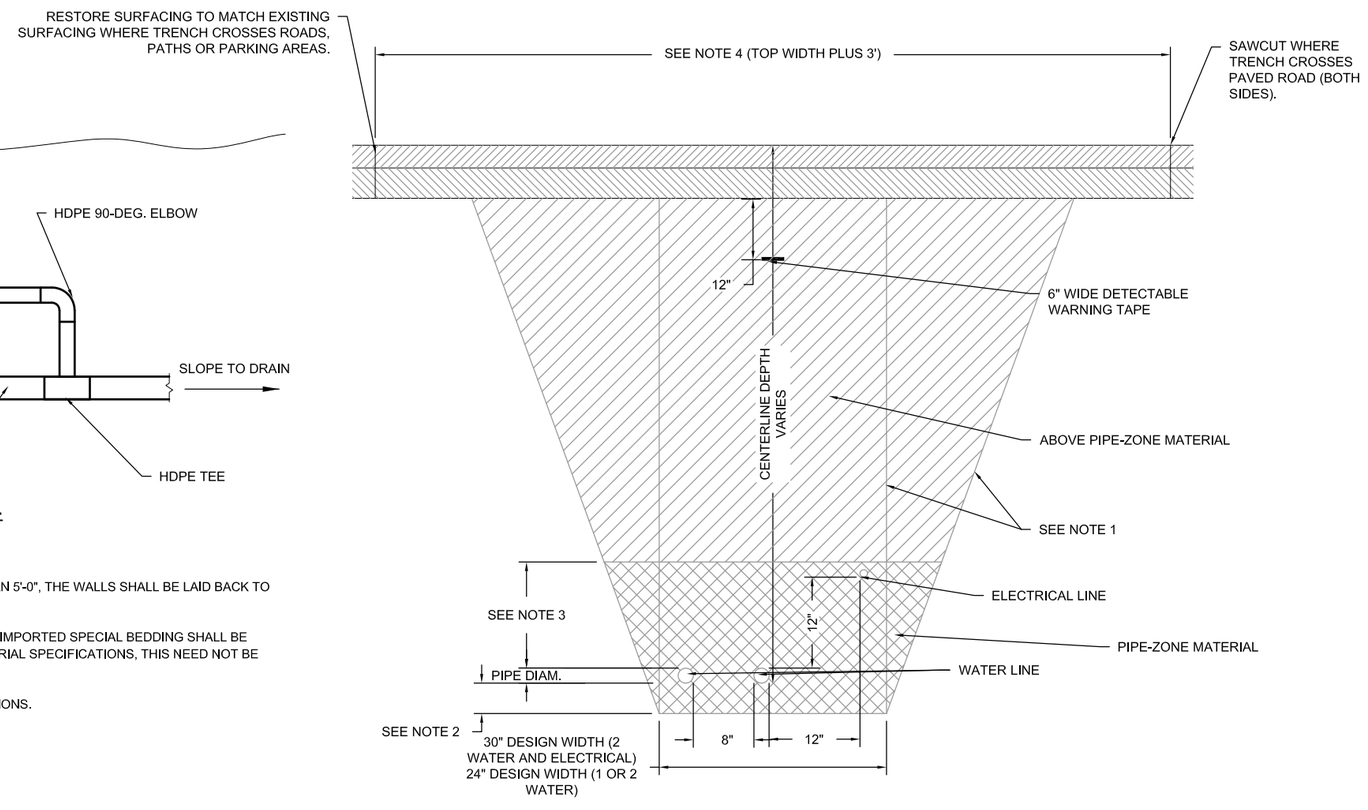

TRENCH CROSS SECTION

NO SCALE

TRENCHING NOTES:

1. WALLS SHALL BE VERTICAL FOR TRENCHES LESS THAN 5'-0" DEEP AT CENTERLINE. FOR DEPTHS GREATER THAN 5'-0", THE WALLS SHALL BE LAID BACK TO MEET APPLICABLE SAFETY STANDARDS.
2. IF BOTTOM OF TRENCH IS UNSATISFACTORY BEDDING MATERIAL, A MINIMUM OF 6" OF PIPE-ZONE MATERIAL OR IMPORTED SPECIAL BEDDING SHALL BE USED DEPENDING ON MATERIAL ENCOUNTERED. IF SOIL IS OF A UNIFORM TEXTURE MEETING PIPE-ZONE MATERIAL SPECIFICATIONS, THIS NEED NOT BE EXCAVATED.
3. REQUIRED DEPTH OF PIPE ZONE MATERIAL IS 12" UNLESS INDICATED OTHERWISE IN DRAWINGS OR SPECIFICATIONS.
4. IN AREAS WHERE TRENCH RESURFACING IS REQUIRED, THIS INDICATES MAXIMUM PAY WIDTH ALLOWED.
5. MAINTAIN 8" MINIMUM HORIZONTAL SEPARATION BETWEEN UTILITY LINES IN THE SAME TRENCH.
6. UTILITY LINES SHALL BE BURIED A MINIMUM OF 24 INCHES UNLESS OTHERWISE NOTED.
7. WRAP ALL BURIED, NON-METALLIC PIPE WITH TRACER WIRE. WHERE POSSIBLE, ATTACH TRACER WIRE TO OBJECTS OR STRUCTURES ABOVE GRADE (SEE SPECIFICATION SECTION 312000).

United States Department of Agriculture
Forest Service

(R8)
SOUTHERN REGION

STAMPS, LOGOS, AND SEALS

NO.	REVISION / ISSUE	DATE
4		
3		
2		
1		

PROJECT NAME

SHERANDO RECREATION AREA WATER SYSTEM REPLACEMENT

GEORGE WASHINGTON & JEFFERSON NATIONAL FORESTS

GLENWOOD/PEDLAR RANGER DISTRICTS

DRAWING TITLE

DRAINLINE, TRENCH, VALVE BOX DETAIL

DATE 09/06/2024	ARCHIVE NO. #
DESIGNER A. FOX	DRAWING SHEET NO. D-07
DRAWN A. FOX	
CHECKED D. KIMBALL	
PROJECT NO. #	SHEET 027 OF 030

6/28/26 15:23 RORYMULLENNEX C:\USERS\RORYMULLENNEX\APPDATA\LOCAL\BOX\BOX EDIT\DOCUMENTS\M5TL95QHBKKGR9YXDM7EG=4 - DRAINLINE TRENCH VALVE BOX.DWG;

NOTES

1. POTABLE WATER TOWER SHALL BE PAINTED BLUE. THE CONTRACTOR SHALL SUBMIT PAINT COLORS TO CONTRACTING OFFICER FOR APPROVAL.

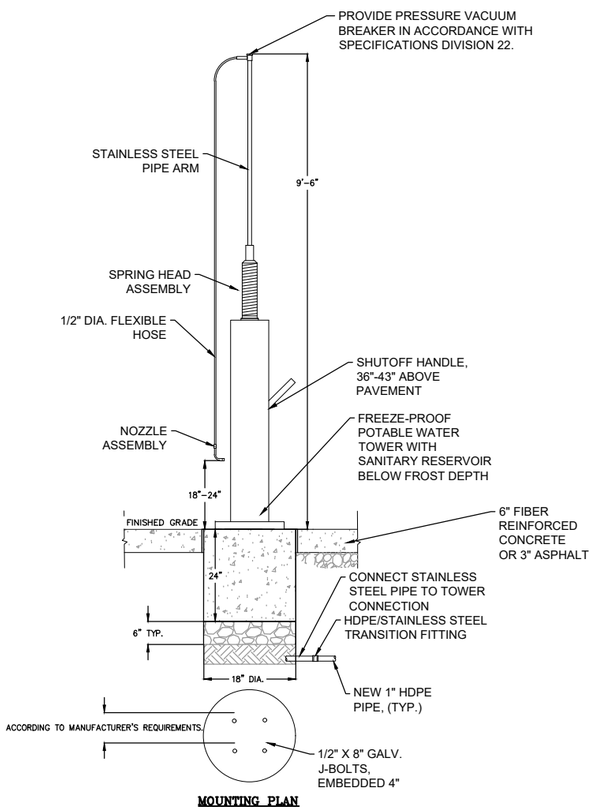

POTABLE WATER TOWER DETAIL
NOT TO SCALE

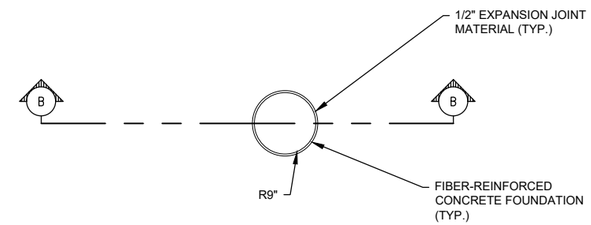

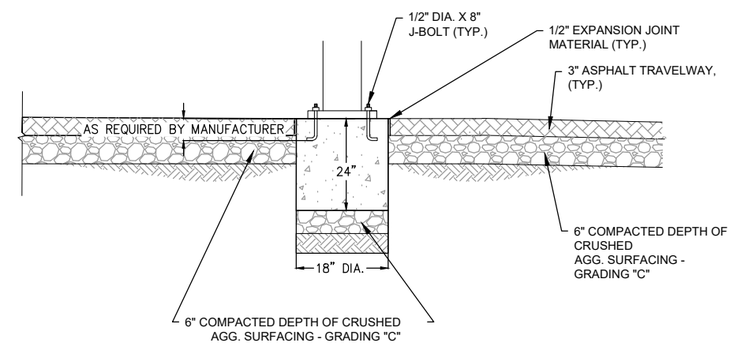

WATER TOWER FOUNDATION (SECTION B–B)
NOT TO SCALE

USDA FOREST SERVICE
United States Department of Agriculture
Forest Service

(R8)
SOUTHERN REGION

STAMPS, LOGOS, AND SEALS

NO.	REVISION / ISSUE	DATE
4		
3		
2		
1		

PROJECT NAME

SHERANDO RECREATION AREA WATER SYSTEM REPLACEMENT

GEORGE WASHINGTON & JEFFERSON NATIONAL FORESTS

GLENWOOD/PEDLAR RANGER DISTRICTS

DRAWING TITLE

WATER TOWER FILL STATION

DATE 09/06/2024	ARCHIVE NO. #
DESIGNER A. FOX	DRAWING SHEET NO. D-08
DRAWN A. FOX	
CHECKED D. KIMBALL	
PROJECT NO. #	SHEET 028 OF 030

6/28/26 20:39 RORYMULLENNEX C:\USERS\RORYMULLENNEX\APPDATA\LOCAL\BOX\BOX EDIT\DOCUMENTS\1D5341YCA9K2S2DVLZQXACG=\D-08 POTABLE WATER TOWER_RECOVER.DWG;

APPROXIMATE LOOP A BUILDING FOUNDATION DIMENSIONS: 128" X 96"

LOOP A WELL HOUSE

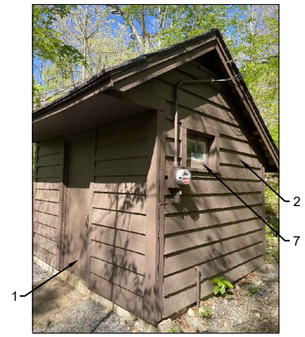

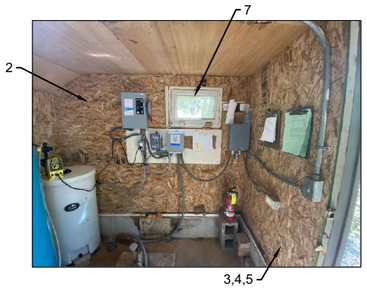

LOOP A WELL HOUSE NOTES:

1. REPLACE ENTRY DOOR. CONTRACTOR SHALL DETERMINE APPROPRIATE DIMENSIONS. DOOR SHALL BE FLUSH-FACED HOLLOW METAL EXTERIOR DOOR WITH THE FOLLOWING FEATURES:
   - 1.1 18-GUAGE GALVANNEAL
   - 1.2 POLYSTYRENE CORE
   - 1.3 LEFT HAND
   - 1.4 18"X18" LOUVER IN BOTTOM HALF
   - 1.5 NO LITE
   - 1.6 MORTISE LOCK WITH CLASSROOM FUNCTION
   - 1.7 HEAVY-DUTY BALL BEARING HINGES
   - 1.8 STANDARD-DUTY DOOR CLOSER WITH HOLD-OPEN FEATURE
   - 1.9 ADA-COMPLIANT BUMPER THRESHOLD WITH VINYL SEAL
   - 1.10 DOOR COLOR SHALL BE FOREST SERVICE BROWN
2. INSTALL THROUGH-WALL EXHAUST FAN WITH 8" BLADE IN NORTHEAST WALL. INSTALL AS CLOSE TO CEILING AS PRACTICABLE. MINIMUM AIRFLOW RATE SHALL BE 360 CFM. FRAME SHALL BE ALUMINUM. BLADE SHALL BE GALVANIZED STEEL. INSTALL ALL REQUIRED WIRING AND FRAMING FOR A COMPLETE AND SAFELY OPERABLE INSTALLATION. FAN SHALL BE CANARM MODEL AX08, OR EQUIVALENT.

LOOP A WELL HOUSE NOTES CONTINUED:

3. REMOVE ALL WALL AND CEILING PANELS (ALL 4 WALLS). REMOVE AND SAVE SHELVES FOR REINSTALLATION.
4. INSTALL R-13 FIBERGLASS INSULATION IN ALL WALLS AND R-49 FIBERGLASS INSULATION ABOVE CEILING. INSULATION SHALL BE OWENS CORNING PINK, OR EQUIVALENT.
5. INSTALL 5/8" EXTERIOR-GRADE PLYWOOD SIDING ON ALL INTERIOR WALLS AND CEILING. PLYWOOD SHALL BE T1-11, OR EQUIVALENT. REINSTALL SHELVES IN SAME LOCATIONS.
6. INSTALL 2000/4000W 240Vac ELECTRIC WALL-MOUNTED HEATER, BROAN MODEL 198, OR EQUIVALENT IN SOUTHWEST WALL. INSTALL AS CLOSE TO THE BOTTOM OF THE STICK-FRAMED WALL AS IS SAFE AND PRACTICABLE. INSTALL ALL REQUIRED WIRING AND FRAMING FOR A COMPLETE AND SAFELY OPERABLE INSTALLATION.
7. REPLACE 2 WINDOWS. FOR EACH:
   - 7.1 TEST THE EXISTING PAINT AND GLAZING FOR LEAD AND ASBESTOS AND DISPOSE OF PROPERLY IN ACCORDANCE WITH ALL REGULATIONS.
   - 7.2 REPLACE SASH, TRIM, AND ANY FRAMING NECESSARY TO ACCOMMODATE NEW WINDOW.
   - 7.3 WINDOW SHALL BE OPENABLE AND HAVE REMOVABLE SCREEN; COORDINATE WITH C.O.R. FOR ALL OTHER DETAILS.

LOOP A WELL HOUSE NOTES CONTINUED:

8. REPLACE THE WATER PIPING INSIDE THE WELL HOUSE WITH SCH 80 PVC AS FOLLOWS:
   - 8.1 REPLACE ALL EXISTING COMPONENTS (FOR EXAMPLE VALVES, GAUGES, UNIONS, TEES, SPIGOTS, ETC.) WITH SIMILAR COMPONENTS APPROPRIATE FOR HDPE AND SAFE FOR DRINKING WATER SUPPLY. ALL COMPONENTS SHALL BE LEAD-FREE. ENSURE THE SAME FUNCTIONALITY AS THE CURRENT PIPNG, INCLUDING THE ABILITY TO WINTERIZE THE PIPING OR REMOVE COMPONENTS.
   - 8.2 ALL PVC PIPE, FITTINGS, GLUE, PRIMER, ETC., SHALL BE SAFE FOR DRINKING WATER CONTACT. PIPE AND FITTINGS SHALL BE MARKED WITH NSF/ANSI 61 CERTIFICATION AND GLUE AND PRIMER SHALL BE NSF-LISTED.
   - 8.3 TRANSITION FROM PVC TO HDPE SUPPLY PIPE SHALL BE FLANGED AND INCORPORATE A STEEL BACKING FLANGE ON THE HDPE SIDE.
   - 8.4 INSTALL PIPE SUPPORTS AT NO FARTHER THAN 30" APART AND AT ALL HORIZONTAL CHANGES IN DIRECTION.
   - 8.5 INSTALL A VACUUM BREAKER ON EVERY HOSE BIB.

APPROXIMATE WILLIAMS BRANCH BUILDING FOUNDATION DIMENSIONS: 127" X 103"

WILLIAMS BRANCH WELL HOUSE

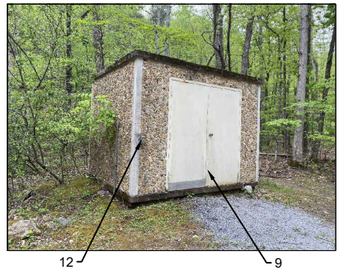

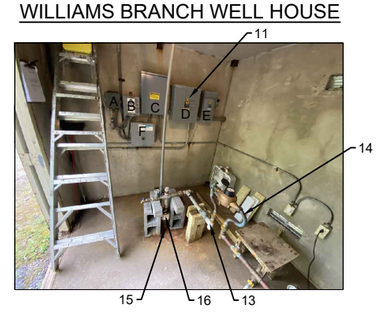

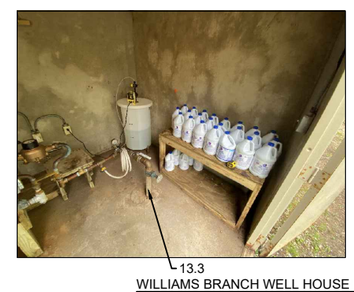

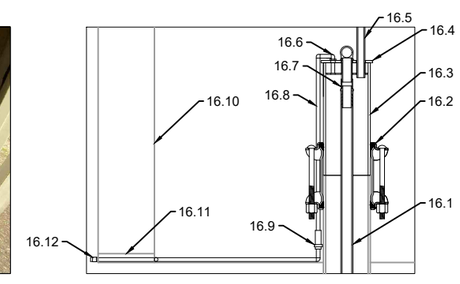

N.T.S.

WILLIAMS BRANCH WELL HOUSE NOTES:

9. REPLACE ENTRY DOORS AND FRAME. CONTRACTOR SHALL DETERMINE APPROPRIATE DIMENSIONS. DOORS SHALL BE FLUSH-FACED HOLLOW METAL EXTERIOR DOORS WITH THE FOLLOWING FEATURES:
   - 9.1 18-GUAGE GALVANNEAL
   - 9.2 POLYSTYRENE CORE
   - 9.3 LEFT HAND REVERSE ACTIVE
   - 9.4 24"X24" LOUVERS IN BOTTOM HALVES
   - 9.5 MORTISE LOCK WITH LATCH GUARD AND CLASSROOM FUNCTION
   - 9.6 HEAVY-DUTY BALL BEARING HINGES
   - 9.7 STANDARD-DUTY DOOR CLOSER WITH HOLD-OPEN FEATURE
   - 9.8 ADA-COMPLIANT BUMPER THRESHOLD WITH VINYL SEAL
   - 9.9 DOOR COLOR SHALL BE FOREST SERVICE BROWN
10. INSTALL THROUGH-WALL EXHAUST FAN WITH 8" BLADE. INSTALL IN REAR WALL, AS CLOSE TO CEILING AS PRACTICABLE. MINIMUM AIRFLOW RATE SHALL BE 360 CFM. FRAME SHALL BE ALUMINUM. BLADE SHALL BE GALVANIZED STEEL. INSTALL ALL REQUIRED WIRING AND FRAMING FOR A COMPLETE AND SAFELY OPERABLE INSTALLATION. FAN SHALL BE CANARM MODEL AX08, OR EQUIVALENT.
11. REPLACE ALL ELECTRICAL COMPONENTS IN THIS BUILDING, EXCEPT THE WELL RELAY AND PUMP CONTROLLER, AS FOLLOWS:
   - 11.1 A - WELL RELAY (WILL NOT BE NEEDED AFTER CONTRACTOR INSTALLS NEW CONTROL SYSTEM)

WILLIAMS BRANCH WELL HOUSE NOTES CONTINUED:

- 11.2 B - PUMP CONTROLLER (DOES NOT NEED TO BE REPLACED)
- 11.3 C - BREAKER PANEL
- 11.4 D - GENERATOR CONTROL SWITCH
- 11.5 E - GENERATOR SAFETY SWITCH
- 11.6 F - HAND-OFF-AUTO SWITCH FOR WELL PUMP
- 11.7 CONDUIT, WIRING, RECEPTACLES, SWITCHES, LIGHT FIXTURES

12. REMOVE EXISTING GENERATOR RECEPTACLE AND INSTALL NEW NEMA L14-30R RECEPTACLE FOR CONNECTION OF A GENERATOR.
13. REPLACE THE WATER PIPING INSIDE THE WELL HOUSE WITH SCH 80 PVC AS FOLLOWS:
   - 13.1 REPLACE ALL EXISTING COMPONENTS (FOR EXAMPLE VALVES, GAUGES, UNIONS, TEES, SPIGOTS, ETC.) WITH SIMILAR COMPONENTS APPROPRIATE FOR HDPE AND SAFE FOR DRINKING WATER SUPPLY. ALL COMPONENTS SHALL BE LEAD-FREE. ENSURE THE SAME FUNCTIONALITY AS THE CURRENT PIPING, INCLUDING THE ABILITY TO WINTERIZE THE PIPING OR REMOVE COMPONENTS.
   - 13.2 ALL PVC PIPE, FITTINGS, GLUE, PRIMER, ETC., SHALL BE SAFE FOR DRINKING WATER CONTACT. PIPE AND FITTINGS SHALL BE MARKED WITH NSF/ANSI 61 CERTIFICATION AND GLUE AND PRIMER SHALL BE NSF-LISTED.
   - 13.3 TRANSITION FROM PVC TO HDPE SUPPLY PIPE SHALL BE FLANGED AND INCORPORATE A STEEL BACKING FLANGE ON THE HDPE SIDE.
   - 13.4 INSTALL PIPE SUPPORTS AT NO FARTHER THAN 30" APART AND AT ALL HORIZONTAL CHANGES IN DIRECTION.
   - 13.5 INSTALL A VACUUM BREAKER ON EVERY HOSE BIB.

WILLIAMS BRANCH WELL HOUSE NOTES CONTINUED:

14. INSTALL A PIPE SUPPORT FOR THE METER SETTER ON EACH SIDE OF THE METER. DO NOT REPLACE THE COPPER METER SETTER OR METER.
15. REPLACE THE WATER SUPPLY PIPE FROM THE WELL HEAD TO THE PUMP WITH 1.25" Ø HDPE PIPE.
16. EXTEND WELL CASING TO 12" (MIN) ABOVE FINISHED FLOOR ELEVATION, SEAL WELL HEAD, AND PROVIDE A DRAIN FOR THE SMALL AMOUNT OF ARTESIAN FLOW.
   - 16.1 1.25" Ø HDPE WELL PIPE TO PUMP
   - 16.2 STYLE 38 DRESSER COUPLING CERTIFIED FOR USE WITH DRINKING WATER, SEE SPECIFICATIONS, DIVISION 22.
   - 16.3 304 STAINLESS STEEL CASING EXTENSION.
   - 16.4 304 STAINLESS STEEL WELL SEAL.
   - 16.5 NSF/ANSI 61-CERTIFIED 3/4" Ø SCH 80 PVC. EXTEND TO ELBOW ATTACHED TO CEILING. (THIS WILL BE USED FOR THE PUMP WIRING AND LIFTING CORD.)
   - 16.6 304 STAINLESS STEEL $\frac{1}{2}$" PEX x $\frac{1}{2}$" MALE THREADED ELBOW.
   - 16.7 STAINLESS STEEL "POLY DROP PIPE KIT" (INCL. TEE, NIPPLE, COUPLER, HOSE BARB, AND HOSE CLAMPS).
   - 16.8 DRAIN LINE. $\frac{1}{2}$" PEX TUBING WITH STAINLESS STEEL ELBOWS. ROUTE TO FLOOR, THEN TO NEARBY WALL, THEN TO THE EXISTING HOLE THROUGH THE WALL NEAR THE CORNER.
   - 16.9 LEAD-FREE DOUBLE CHECK VALVE
   - 16.10 EXISTING WALL
   - 16.11 EXISTING HOLE IN WALL AT CORNER
   - 16.12 STAINLESS STEEL FINE MESH SCREEN ATTACHED WITH HOSE CLAMP.
   - 16.13 ALL MATERIALS LISTED HERE SHALL BE PFAS-FREE AND SHALL BE CERTIFIED BY NSF/ASNI 61-2025 AND NSF/ASNI 372-2024 AS SAFE FOR USE IN DRINKING WATER SYSTEMS. SEE SPECIFICATIONS, DIVISION 22.

USDA FOREST SERVICE

United States Department of Agriculture
Forest Service

RESERVOIR DETAIL
SOUTHERN REGION

STAMPS, LOGOS, AND SEALS

NO.	REVISION / ISSUE	DATE
4		
3		
2		
1	R. MULLENNEX	

PROJECT NAME

SHERANDO RECREATION AREA WATER SYSTEM REPLACEMENT

GEORGE WASHINGTON & JEFFERSON NATIONAL FORESTS

GLENWOOD/PEDLAR RANGER DISTRICTS

DRAWING TITLE

RESERVOIR DETAIL

DATE 11/19/2024	ARCHIVE NO. #
DESIGNER R. MULLENNEX	DRAWING SHEET NO. D-09
DRAWN R. MULLENNEX	
CHECKED	
PROJECT NO. #	SHEET 030 OF 030

6/30/26 10:22 RORYMULLENNEX C:\USERS\RORYMULLENNEX\APPDATA\LOCAL\BOX\BOX EDIT\DOCUMENTS\RGFMA8AJWUQCDJQORVCAFA==\3 - D-03-04-05-06-09 CONCRETE MANHOLE WITH PLUMBING - ARV.DWG;