SPECIAL PACKAGING INSTRUCTION

CODE ID	SPI NO. (TPO)
98747	F01-218-0344
	SHEET 1 OF 6

PART OR DRAWING NO.	NATIONAL STOCK NO.	CURRENT REV
MULTIPLE PART NUMBERS	1377-01-218-0344 ES	C

ITEM NOMENCLATURE
CORD ASSEMBLY, DETONATING

ORIGINAL DATE
14301

ILL. K. KNIGHTON
P.S. S. OYLER
CHK. D. HALE
AUTH. J. BURLEIGH

MILITARY PRESERVATION IAW MIL-STD-2073-1

SERVICEABLE METHOD: 41
UNSERVICEABLE METHOD: 41

QUP 001 [1]
ICQ 000

CLEANING & DRYING: IAW MIL-STD-2073-1
PRESERVATIVE: N/A

MARKING IAW MIL-STD-129

SPECIAL MARKINGS:

A) SPI NO. F01-218-0344
MARK THE SPI NUMBER ON THE IDENTIFICATION SIDE OF CONTAINER.

B) PROPER SHIPPING NAME: FUZES, DETONATING
UN0257

C) UN POP MARKING: (UN) 4G/Y10/S/**
USA/DOD/AF70

**THE LAST TWO DIGITS OF THE YEAR DURING WHICH THE PACKAGING WAS MANUFACTURED.

D) REUSABLE CONTAINER & DUNNAGE DO NOT DESTROY.

NOTE: THE ABOVE POP MARKINGS ARE FOR DOD USE ONLY.

CLOSURE:

LEVEL A: IAW ASTM D6251
LEVEL B: IAW THIS INSTRUCTION

PACKING AS SPECIFIED BELOW AND BILL OF MATERIALS

LEVEL	SPEC	STYLE	TYPE	CL	VRTY	GR	TR
A	ASTM D6251	A	III	2			B
B	ASTM D5118	RSC				V3c	

	LEVEL A	LEVEL B
GROSS CU FT	SEE NOTICE 1	1.043
GROSS WT LBS	SEE NOTICE 1	4
DESIGN FRAGILITY G	80	80

	LENGTH	WIDTH	DEPTH
CNTR I.D.			
LEVEL A:	SEE NOTICE 1		
LEVEL B:	10	10	16
CNTR O.D.			
LEVEL A:	SEE NOTICE 1		
LEVEL B:	10 3/8	10 3/8	16 3/4
ITEM DIM	VARIES		
ITEM WT.	VARIES		

REVISIONS		
LTR	DESCRIPTION	DATE
B	UPDATED POP MARKING AND CLOSURE METHOD, ILLUSTRATED CLOSURE	22285
C	ADDED CUI, UPDATED PALLETIZATION BOM	24347

CONTROLLED BY: 406 SCMS
CONTROLLED BY: GULAA-HILL AFB
CONTROLLED BY: CUI/SP-CTI
DISTRIBUTION/DISSEMINATION CONTROL: FEDCON
POC: 406SCMS.GULAA.CONTRACTSHILL@US.AF.MIL

DODPOPHM/USA/DOD/AF70/TR14012

SPI NO. F01-218-0344

SPECIAL PACKAGING INSTRUCTION	CODE ID 98747	SPI NO. (TPO) F01-218-0344
ITEM NOMENCLATURE CORD ASSEMBLY, DETONATING		SHEET 2 OF 6

P/N	QTY REQD	NOMENCLATURE OR DESCRIPTION	SIZE: (INCHES UNLESS SPECIFIED) TOLERANCES ON FRAC. ± ⅛, DECIMAL ± .10, ANGLES ± 1°	MATERIAL SPECIFICATION
-4	A/R	TAPE, PACKAGING	3 X AS REQUIRED	ASTM D5486 TYPE I OR V
-3	1	WRAP	AS REQUIRED	A-A-59135 CLASS 1, GRADE B
-2	1	BARRIER BAG	AS REQUIRED	MIL-DTL-117 TYPE I, CLASS F, STYLE 1
-1	A/R	CUSHIONING	AS REQUIRED	A-A-1898 GRADE II, CLASS A OR B

SPECIAL PACKAGING INSTRUCTION	CODE ID 98747	SPI NO. (TPO) F01-218-0344
ITEM NOMENCLATURE CORD ASSEMBLY, DETONATING		SHEET 3 OF 6

MUNITION NOTICES

NOTICE 1: FOR LEVEL A PACKING REQUIREMENTS: THE LEVEL B PACKS SHALL BE OVERBOXED IN A LEVEL A SPECIFIED CONTAINER SHOWN ON PAGE 1 UNDER PACKAGING LEVEL A. MARK THE OUTSIDE OF THE OVERBOX "OVERPACK." THE SIZE AND WEIGHT OF THE OVERBOX WILL VARY DEPENDING ON THE NUMBER OF ITEMS BEING SHIPPED. USE FILLER PAD OF ASTM D4727, CF, DOM, GR 275 (OR EQUAL) TO ENSURE A TIGHT FIT IN THE OVERBOX.

NOTICE 2: ASSETS PACKAGED IN ACCORDANCE WITH THE PREVIOUS EDITION OF THIS SPI DO NOT REQUIRE REPACKAGING IF THE INTEGRITY OF THE SPI IS MAINTAINED.

NOTICE 3: SEE SPIRES FOR A COMPLETE LISTING OF NSN's ASSIGNED TO THIS SPI.

NOTICE 4: THIS SPI IS NOT AUTHORIZED FOR USE WITHOUT PROPER HAZARD CLASSIFICATION. UNLESS A FINAL HAZARD CLASSIFICATION HAS BEEN ISSUED, A COPY OF THE VALID INTERIM HAZARD CLASSIFICATION LETTER ALONG WITH DOT SP 15448 MUST ACCOMPANY EACH SHIPMENT.

NOTICE 5: LEVEL A PROTECTION REQUIRED TO MEET THE MOST SEVERE WORLDWIDE SHIPMENT, HANDLING, AND STORAGE CONDITIONS. EXAMPLES OF SITUATIONS ARE: WAR RESERVE MATERIAL, MOBILIZATION, STRATEGIC AND THEATER DEPLOYMENT, OPEN STORAGE AND DECK LOADING. SECURITY ASSISTANCE ITEMS, INCLUDING FMS, ARE ESPECIALLY SUSCEPTIBLE TO DAMAGE DUE TO UNKNOWN AND UNFAVORABLE TRANSPORTATION, CLIMATIC, AND STORAGE CONDITIONS. PROVIDE LEVEL B PACKING UNLESS OTHERWISE DIRECTED BY THE PROCURING COUNTRY.

INTERNATIONAL STANDARDS FOR PHYTOSANITARY MEASURES
REVISION OF ISPM NO. 15
REVISION OF WOOD PACKAGING MATERIAL FOR INTERNATIONAL TRADE

THE FOLLOWING STATEMENT IS IN COMPLIANCE WITH THE UNITED NATIONS-IMPLEMENTED RESTRICTIONS ON WOOD PACKAGING MATERIAL (WPM). THIS REQUIREMENT IS SPECIFICALLY CONCERNED WITH INVASIVE SPECIES SUCH AS THE PINEWOOD NEMATODE. WPM IS DEFINED AS WOOD PALLETS, SKIDS, LOAD BOARDS, PALLET COLLARS, WOODEN BOXES, REELS, DUNNAGE, CRATES, FRAMES, AND CLEATS. THE STATEMENT BELOW CITES THE REQUIREMENTS IN DETAIL AND COVERS LUMBER FOR BUILDING CONTAINERS AND PALLETS USED FOR DELIVERIES, RESULTING IN SHIPMENTS WORLDWIDE (DIRECT, OR THROUGH AIR LOGISTICS CENTERS (ALC), CONTAINER CONSOLIDATION POINTS (CCP), OR OTHER BASES).

WOODEN LUMBER, WOODEN PALLET AND PACKAGING/CONTAINER STATEMENT:

ALL WOODEN LUMBER, WOODEN PALLETS, AND WOODEN CONTAINERS PRODUCED ENTIRELY OR IN PART OF WOOD PACKAGING MATERIAL (WPM) SHALL BE CONSTRUCTED FROM DEBARKED WOOD IN ADDITION TO THE APPLICATION OF HEAT-TREATED (HT) MATERIAL (HT TO 56 DEGREES CENTIGRADE OR 133 DEGREES FAHRENHEIT FOR 30 MINUTES). CERTIFICATION/MARKING IS REQUIRED BY AN ACCREDITED AGENCY RECOGNIZED BY THE AMERICAN LUMBER STANDARDS COMMITTEE (ALSC). FOR REFERENCE DOCUMENTATION, SEE LATEST REVISION OF "INTERNATIONAL STANDARDS FOR PHYTOSANITARY MEASURES (ISPM NO. 15), "REGULATION OF WOOD PACKAGING MATERIAL IN INTERNATIONAL TRADE."

NOTES

1. MAY PLACE UP TO 5 BAGGED ITEMS INTO SHIPPING CONTAINER.

SPECIAL PACKAGING INSTRUCTION	CODE ID 98747	SPI NO. (TPO) F01-218-0344
ITEM NOMENCLATURE CORD ASSEMBLY, DETONATING		SHEET 4 OF 6

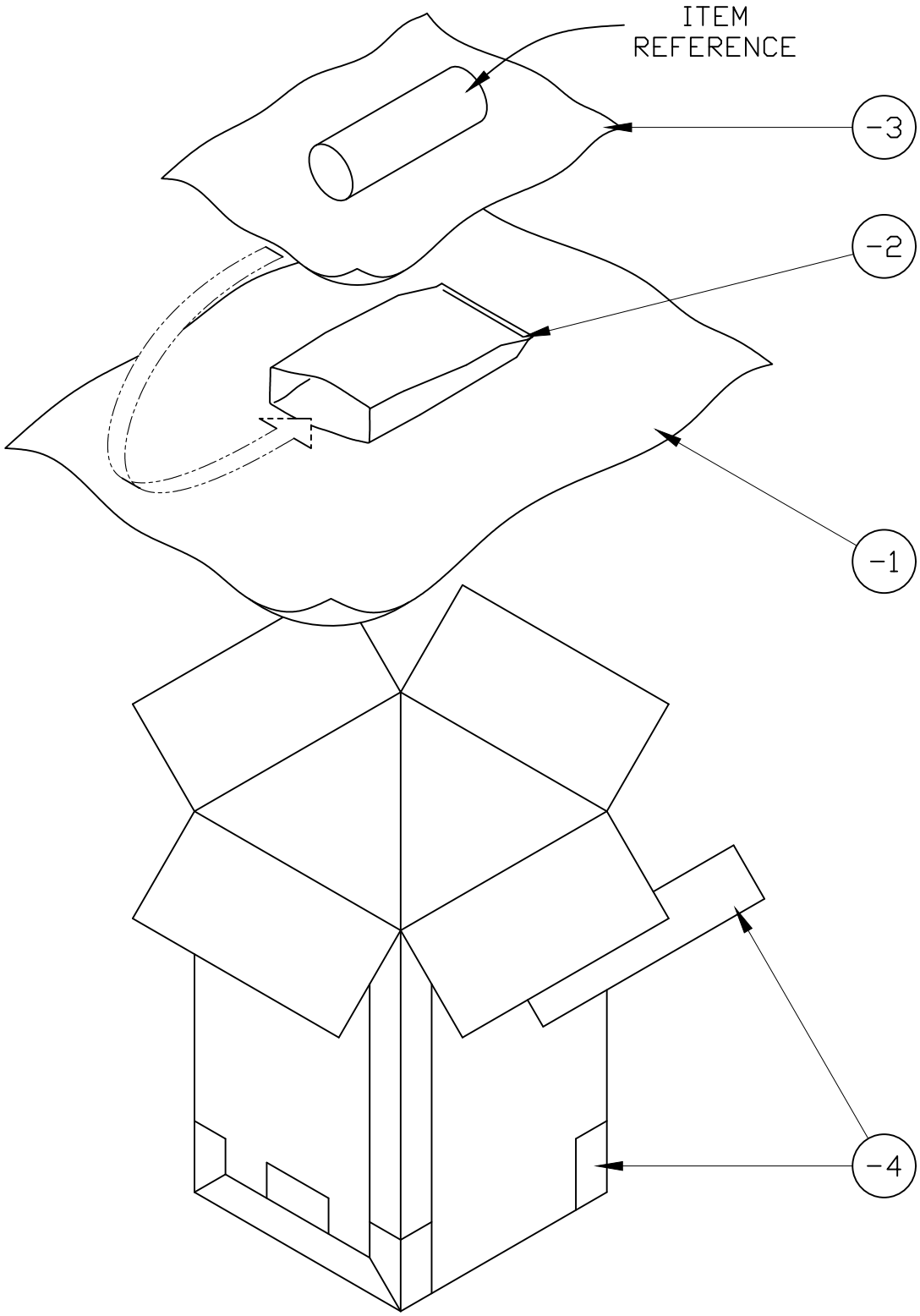

SPECIAL PACKAGING INSTRUCTION	CODE ID 98747	SPI NO. (TPO) F01-218-0344
ITEM NOMENCLATURE CORD ASSEMBLY, DETONATING		SHEET 5 OF 6

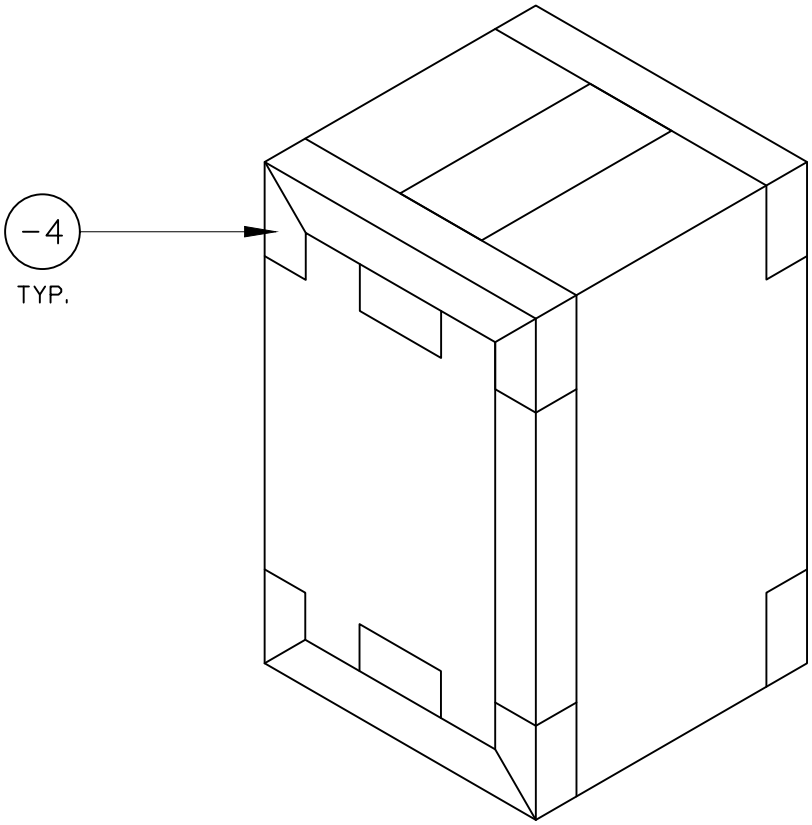

CLOSURE

SPECIAL PACKAGING INSTRUCTION	CODE ID 98747	SPI NO. (TPO) F01-218-0344
ITEM NOMENCLATURE CORD ASSEMBLY, DETONATING		SHEET 6 OF 6

PALLETIZATION PROCEDURE FOR LEVEL B PACK

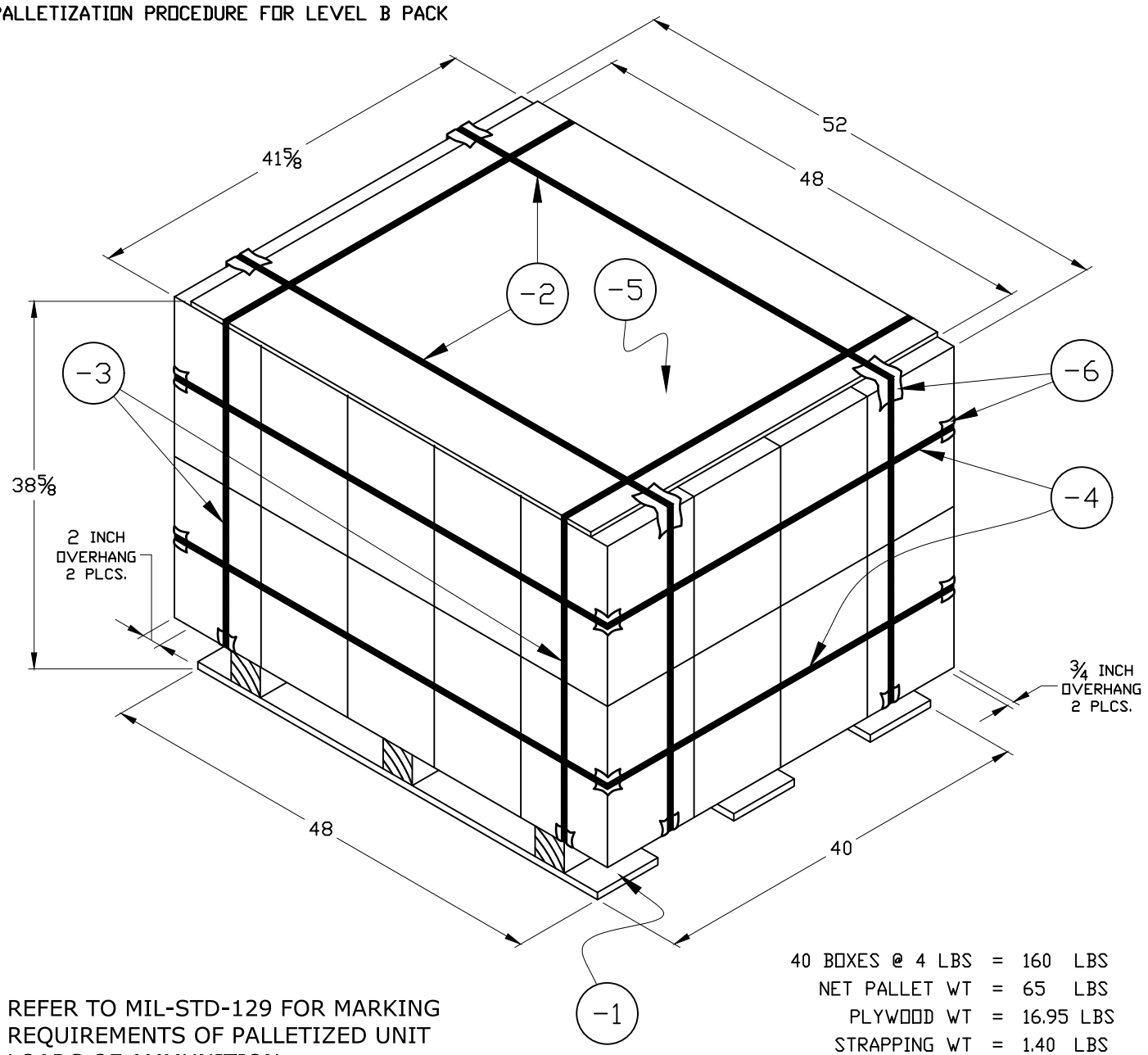

REFER TO MIL-STD-129 FOR MARKING REQUIREMENTS OF PALLETIZED UNIT LOADS OF AMMUNITION.

40 BOXES @ 4 LBS	=	160	LBS
NET PALLET WT	=	65	LBS
PLYWOOD WT	=	16.95	LBS
STRAPPING WT	=	1.40	LBS
		243.35	LBS

CUBE OF PALETIZED LOAD = 48.4

P/N	QTY REQD	NOMENCLATURE OR DESCRIPTION	SIZE: (INCHES UNLESS SPECIFIED) TOLERANCES ON FRAC. ± 1/8, DECIMAL ± .10, ANGLES ± 1°	MATERIAL SPECIFICATION
-6	20	EDGE PROTECTOR	AS MANUFACTURED	NSN 8135-00-145-0070 (OR EQUAL)
-5	1	PLYWOOD	48 X 41 5/8 X 3/8	A-A-55057 TYPE A
-4	2	STRAPPING, STEEL	3/4 X .015 (MIN) X AS REQD	ASTM D3953 TYPE 1, REG DUTY, FIN B, GRADE 2
-3	2	STRAPPING, STEEL	3/4 X .015 (MIN) X AS REQD	ASTM D3953 TYPE 1, REG DUTY, FIN B, GRADE 2
-2	2	STRAPPING, STEEL	3/4 X .015 (MIN) X AS REQD	ASTM D3953 TYPE 1, REG DUTY, FIN B, GRADE 2
-1	1	PALLET, 4-WAY ENTRY	40 X 48	MIL-DTL-15011 TYPE I, CLASS 1, STYLE 1

SPECIAL PACKAGING INSTRUCTION

CODE ID	SPI NO. (TPO)
98747	F01-056-0824
	SHEET 1 OF 6

PART OR DRAWING NO.	NATIONAL STOCK NO.	CURRENT REV	ILL. K. KNIGHTON
MULTIPLE PART NUMBERS	1325-01-056-0824	T	P.S. A. DASILVA
ITEM NOMENCLATURE		ORIGINAL DATE	CHK. D. HALE
FUZE, BOMB		77311	AUTH. J. BURLEIGH

DODPOPHM/USA/DOD/AF70/TR14026

MILITARY PRESERVATION IAW MIL-STD-2073-1

SERVICEABLE METHOD: 41
UNSERVICEABLE METHOD: 41

QUP 001
ICQ 000

CLEANING & DRYING: IAW MIL-STD-2073-1
PRESERVATIVE: N/A

MARKING IAW MIL-STD-129

SPECIAL MARKINGS:

A) SPI NO. F01-056-0824
MARK THE SPI NUMBER ON THE IDENTIFICATION SIDE OF CONTAINER.

B) PROPER SHIPPING NAME: FUZES, DETONATING
UN0410

C) UN POP MARKING: UN 4G/Y5/S/**
USA/DOD/AF70

**THE LAST TWO DIGITS OF THE YEAR DURING WHICH THE PACKAGING WAS MANUFACTURED.

D) REUSABLE CONTAINER & DUNNAGE DO NOT DESTROY.

NOTE: THE ABOVE POP MARKINGS ARE FOR DOD USE ONLY.

CLOSURE:

LEVEL A: IAW ASTM D6251
LEVEL B: IAW THIS INSTRUCTION

PACKING AS SPECIFIED BELOW AND BILL OF MATERIALS

LEVEL	SPEC	STYLE	TYPE	CL	VRTY	GR	TR
A	ASTM D6251	A	III	2			B
B	ASTM D5118	RSC				V3c	

	LEVEL A	LEVEL B
GROSS CU FT	SEE NOTICE 2	1.043
GROSS WT LBS	SEE NOTICE 2	10
DESIGN FRAGILITY G	60	60

	LENGTH	WIDTH	DEPTH
CNTR I.D.			
LEVEL A:	SEE NOTICE 2		
LEVEL B:	10	10	16
CNTR O.D.			
LEVEL A:	SEE NOTICE 2		
LEVEL B:	10 3/8	10 3/8	16 3/4
ITEM DIM	VARIES		
ITEM WT.	VARIES		

REVISIONS		
LTR	DESCRIPTION	DATE
R	ADDED DISTRIBUTION STATEMENT AND DESTRUCTION NOTICE, UPDATED NOTICES	18095
T	LOWERED POP WEIGHT, UPDATED NOTES AND NOTICES, ADDED CLOSURE DRAWING	23173

SPI NO. F01-056-0824

CONTROLLED BY: 406 SCMS
CONTROLLED BY: GULAA-HILL AFB
CONTROLLED BY: CUI/SP-CTI
DISTRIBUTION/DISSEMINATION CONTROL: FEDCON
POC: 406SCMS.GULAA.CONTRACTSHILL@US.AF.MIL

SPECIAL PACKAGING INSTRUCTION	CODE ID 98747	SPI NO. (TPO) F01-056-0824
ITEM NOMENCLATURE FUZE, BOMB		SHEET 2 OF 6

P/N	QTY REQD	NOMENCLATURE OR DESCRIPTION	SIZE: (INCHES UNLESS SPECIFIED) TOLERANCES ON FRAC. ± ⅛, DECIMAL ± .10, ANGLES ± 1°	MATERIAL SPECIFICATION	
-4	A/R	TAPE, PACKAGING	3 X AS REQUIRED	ASTM D5486 TYPE I OR V	3
-3	1	WRAP	AS REQUIRED	A-A-59135 CLASS 1, GRADE B	1
-2	1	BAG, BARRIER	AS REQUIRED	MIL-DTL-117 TYPE I, CLASS F, STYLE 1	1
-1	A/R	CUSHIONING	AS REQUIRED	A-A-1898 GRADE II	2

SPECIAL PACKAGING INSTRUCTION	CODE ID 98747	SPI NO. (TPO) F01-056-0824
ITEM NOMENCLATURE FUZE, BOMB		SHEET 3 OF 6

MUNITION NOTICES

NOTICE 1: CLASS 1 (EXPLOSIVE) MATERIAL OWNED BY THE DEPARTMENT OF DEFENSE (DOD) PACKAGED PRIOR TO JANUARY 1, 1990 IN ACCORDANCE WITH THE PACKAGING REQUIREMENTS IN EFFECT AT THAT TIME ARE EXCEPTED FROM THE REQUIREMENTS OF PERFORMANCE ORIENTED PACKAGING (POP) PROVIDED THE PACKAGING HAVE MAINTAINED THEIR INTEGRITY AND THE GOODS ARE DECLARED AS GOVERNMENT OWNED GOODS PACKAGED PRIOR TO JANUARY 1, 1990. THIS CLAUSE DOES NOT APPLY TO COMMERCIAL AIR SHIPMENTS. (REF DLAD 4145.41/AFJI 24-210.)

NOTICE 2: FOR LEVEL A PACKING REQUIREMENTS: THE LEVEL B PACKS SHALL BE OVERBOXED IN A LEVEL A SPECIFIED CONTAINER SHOWN ON PAGE 1 UNDER PACKAGING LEVEL A. MARK THE OUTSIDE OF THE OVERBOX "OVERPACK." THE SIZE AND WEIGHT OF THE OVERBOX WILL VARY DEPENDING ON THE NUMBER OF ITEMS BEING SHIPPED. USE FILLER PAD OF ASTM D4727, CF, DOM, GR 275 (OR EQUAL) TO ENSURE A TIGHT FIT IN THE OVERBOX.

NOTICE 3: ASSETS PACKAGED IN ACCORDANCE WITH PREVIOUS EDITIONS OF THIS SPI DO NOT REQUIRE REPACKAGING IF THE INTEGRITY OF THE SPI IS MAINTAINED.

NOTICE 4: SEE SPIRES FOR A COMPLETE LISTING OF NSN's ASSIGNED TO THIS SPI.

NOTICE 5: THIS SPI IS NOT AUTHORIZED FOR USE WITHOUT PROPER HAZARD CLASSIFICATION. UNLESS A FINAL HAZARD CLASSIFICATION HAS BEEN ISSUED, A COPY OF THE VALID INTERIM HAZARD CLASSIFICATION LETTER ALONG WITH DOT SP 15448 MUST ACCOMPANY EACH SHIPMENT.

NOTICE 6: LEVEL A PROTECTION REQUIRED TO MEET THE MOST SEVERE WORLDWIDE SHIPMENT, HANDLING, AND STORAGE CONDITIONS. EXAMPLES OF SITUATIONS ARE: WAR RESERVE MATERIAL, MOBILIZATION, STRATEGIC AND THEATER DEPLOYMENT, OPEN STORAGE AND DECK LOADING. SECURITY ASSISTANCE ITEMS, INCLUDING FMS, ARE ESPECIALLY SUSCEPTIBLE TO DAMAGE DUE TO UNKNOWN AND UNFAVORABLE TRANSPORTATION, CLIMATIC, AND STORAGE CONDITIONS. PROVIDE LEVEL B PACKING UNLESS OTHERWISE DIRECTED BY THE PROCURING COUNTRY.

INTERNATIONAL STANDARDS FOR PHYTOSANITARY MEASURES
REVISION OF ISPM NO. 15
REVISION OF WOOD PACKAGING MATERIAL FOR INTERNATIONAL TRADE

THE FOLLOWING STATEMENT IS IN COMPLIANCE WITH THE UNITED NATIONS-IMPLEMENTED RESTRICTIONS ON WOOD PACKAGING MATERIAL (WPM). THIS REQUIREMENT IS SPECIFICALLY CONCERNED WITH INVASIVE SPECIES SUCH AS THE PINEWOOD NEMATODE. WPM IS DEFINED AS WOOD PALLETS, SKIDS, LOAD BOARDS, PALLET COLLARS, WOODEN BOXES, REELS, DUNNAGE, CRATES, FRAMES, AND CLEATS. THE STATEMENT BELOW CITES THE REQUIREMENTS IN DETAIL AND COVERS LUMBER FOR BUILDING CONTAINERS AND PALLETS USED FOR DELIVERIES, RESULTING IN SHIPMENTS WORLDWIDE (DIRECT, OR THROUGH AIR LOGISTICS CENTERS (ALC), CONTAINER CONSOLIDATION POINTS (CCP), OR OTHER BASES).

WOODEN LUMBER, WOODEN PALLET AND PACKAGING/CONTAINER STATEMENT:

ALL WOODEN LUMBER, WOODEN PALLETS, AND WOODEN CONTAINERS PRODUCED ENTIRELY OR IN PART OF WOOD PACKAGING MATERIAL (WPM) SHALL BE CONSTRUCTED FROM DEBARKED WOOD IN ADDITION TO THE APPLICATION OF HEAT-TREATED (HT) MATERIAL (HT TO 56 DEGREES CENTIGRADE OR 133 DEGREES FAHRENHEIT FOR 30 MINUTES). CERTIFICATION/MARKING IS REQUIRED BY AN ACCREDITED AGENCY RECOGNIZED BY THE AMERICAN LUMBER STANDARDS COMMITTEE (ALSC). FOR REFERENCE DOCUMENTATION, SEE LATEST REVISION OF "INTERNATIONAL STANDARDS FOR PHYTOSANITARY MEASURES (ISPM NO. 15), "REGULATION OF WOOD PACKAGING MATERIAL IN INTERNATIONAL TRADE."

NOTES

1. WRAP ITEM WITH REF.-3 AND PLACE INTO REF.-2 BARRIER BAG. REMOVE AIR AND SEAL.

2. USE CUSHIONING REF.-1 TO PREVENT ITEM FROM TOUCHING SHIPPING CONTAINER AND TO PREVENT MOVEMENT.

3. SEAL CONTAINER USING REF.-4 ACCORDING TO THE DRAWING.

SPECIAL PACKAGING INSTRUCTION	CODE ID 98747	SPI NO. (TPO) F01-056-0824
ITEM NOMENCLATURE FUZE, BOMB		SHEET 4 OF 6

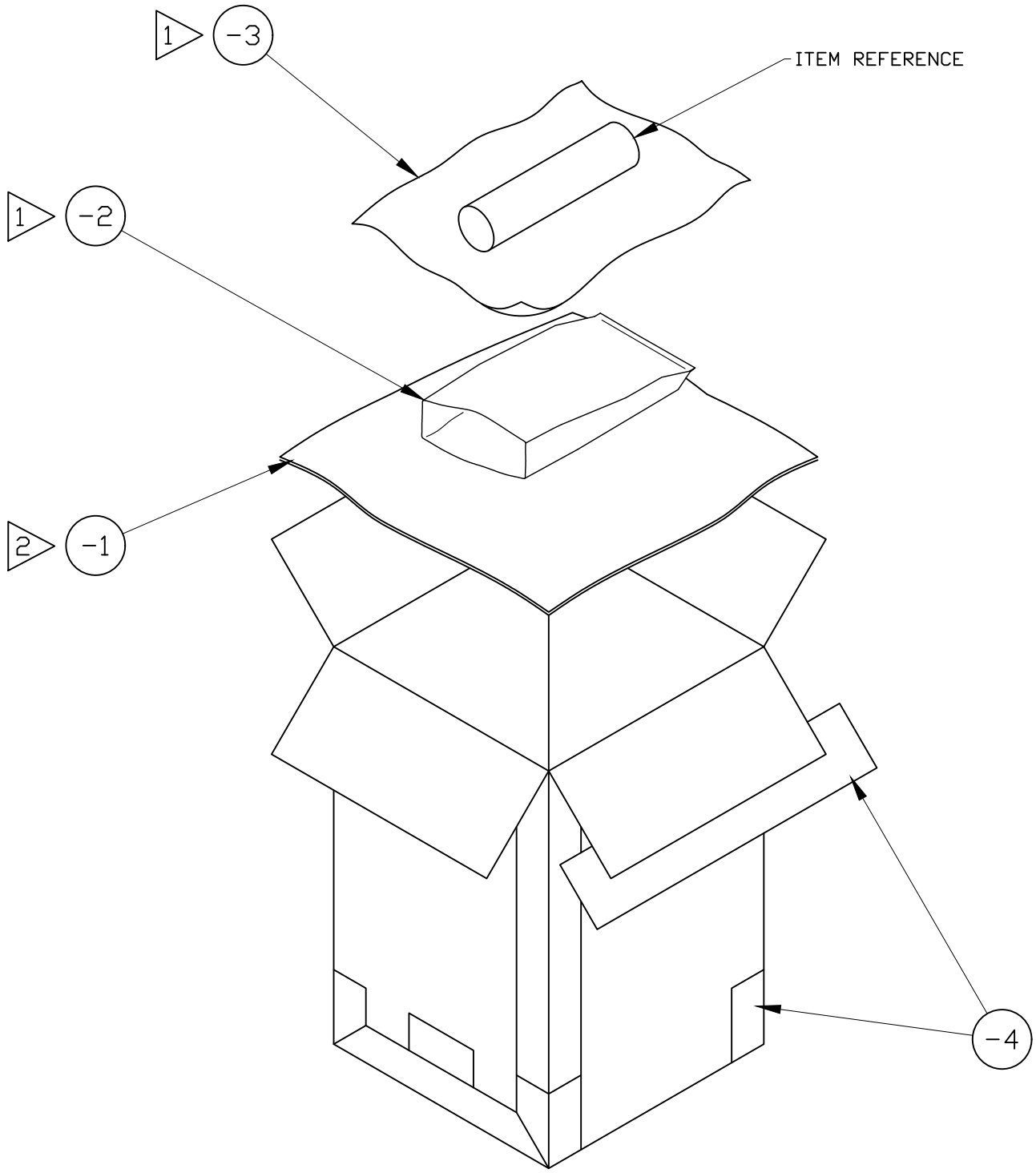

SPECIAL PACKAGING INSTRUCTION	CODE ID 98747	SPI NO. (TPO) F01-056-0824
ITEM NOMENCLATURE FUZE, BOMB		SHEET 5 OF 6

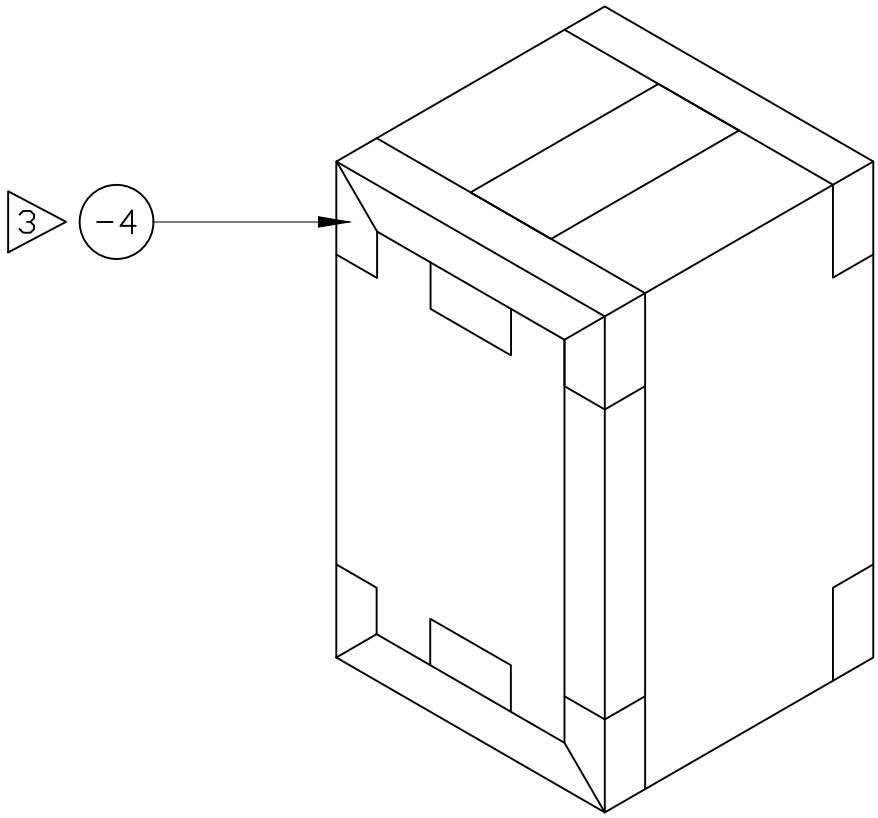

CLOSURE

SPECIAL PACKAGING INSTRUCTION	CODE ID 98747	SPI NO. (TPO) F01-056-0824
ITEM NOMENCLATURE FUZE, BOMB		SHEET 6 OF 6

PALLETIZATION PROCEDURE FOR LEVEL B PACK

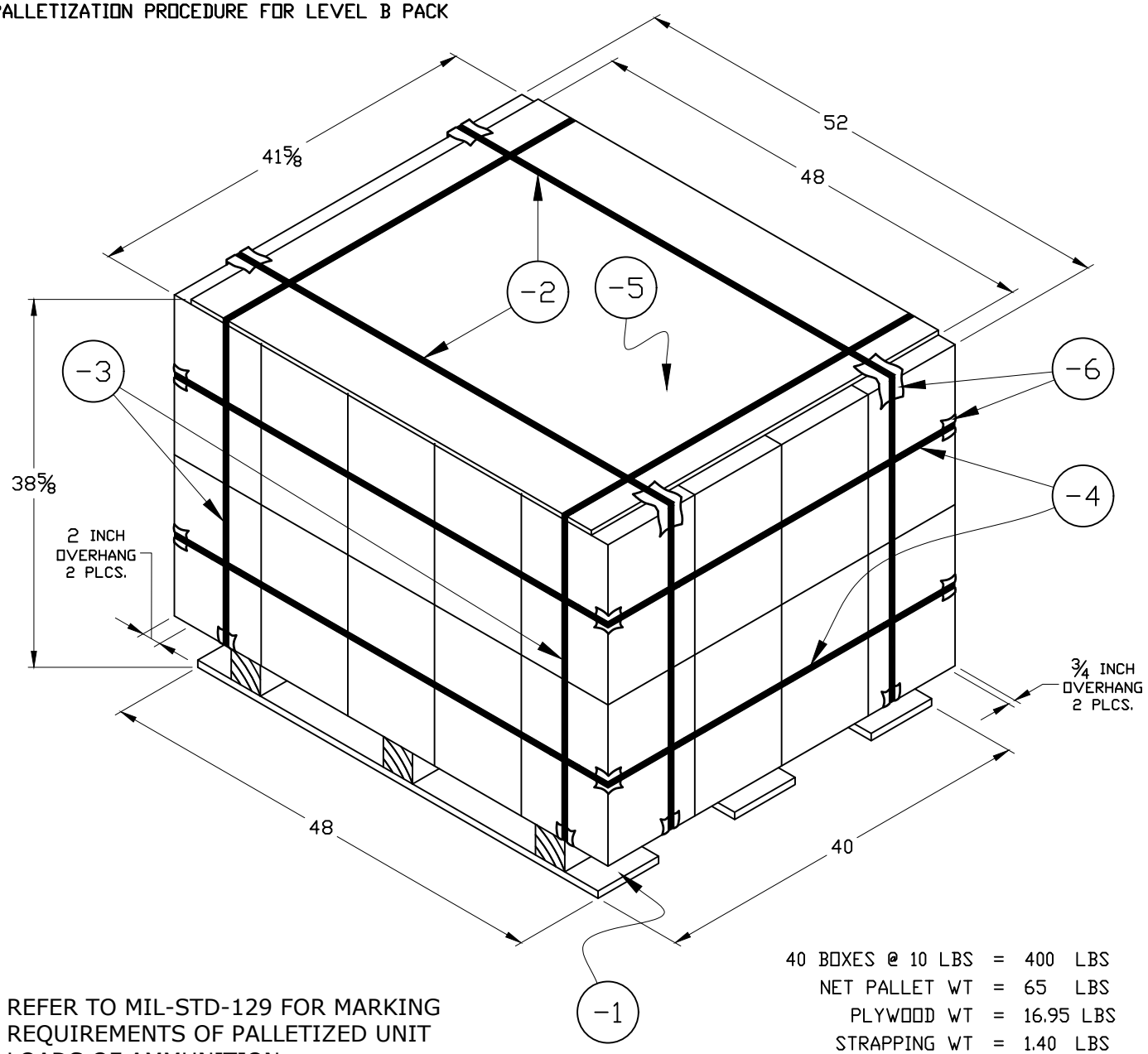

REFER TO MIL-STD-129 FOR MARKING REQUIREMENTS OF PALLETIZED UNIT LOADS OF AMMUNITION.

40 BOXES @ 10 LBS	=	400 LBS
NET PALLET WT	=	65 LBS
PLYWOOD WT	=	16.95 LBS
STRAPPING WT	=	1.40 LBS
		483.35 LBS

CUBE OF PALLETIZED LOAD = 48.4

P/N	QTY REQD	NOMENCLATURE OR DESCRIPTION	SIZE: (INCHES UNLESS SPECIFIED) TOLERANCES ON FRAC. ± 1/8, DECIMAL ± .10, ANGLES ± 1°	MATERIAL SPECIFICATION
-6	20	EDGE PROTECTORS	AS MANUFACTURED	NSN 8135-00-145-0070 (OR EQUAL)
-5	1	PLYWOOD	48 X 41 5/8 X 3/8	A-A-55057 TYPE A
-4	2	STRAPPING, STEEL	3/4 X .015 X AS REQUIRED	ASTM D3953 TYPE 1, REG DUTY, FIN B, GRADE 2
-3	2	STRAPPING, STEEL	3/4 X .015 X AS REQUIRED	ASTM D3953 TYPE 1, REG DUTY, FIN B, GRADE 2
-2	2	STRAPPING, STEEL	3/4 X .015 X AS REQUIRED	ASTM D3953 TYPE 1, REG DUTY, FIN B, GRADE 2
-1	1	PALLET, 4-WAY ENTRY	40 X 48	MIL-DTL-15011 TYPE I, CLASS 1, STYLE 1