BUREAU OF RECLAMATION

Navajo-Gallup Water Supply Project - New Mexico

Cutter Lateral - Reach 21 - Booster Plant

U.S. Department of the Interior JUNE 2025

This page intentionally left blank.

NAVAJO-GALLUP WATER SUPPLY PROJECT - NEW MEXICO

CUTTER LATERAL – REACH 21 - BOOSTER PLANT

FOREWORD

Work is located approximately 26-miles South of Bloomfield, New Mexico in San Juan County.

The principal components of work include the following items:

1. Pre-engineered concrete booster pump station, concrete foundation pad, pipe encasement, yard pipe, fencing, electrical equipment, gravel surfacing, and pipe connections.
2. Installation of secondary regulation tank at Regulation Tank No. 3 site, foundation, electrical equipment, yard pipe, and pipe connections.
3. Reinstallation of gravel surfacing at Regulation Tank No. 3 site
4. Erosion and scour restoration/prevention:
    a. Includes a retaining wall, swale, runoff channel, and site regrading.
5. Supervisory Control and Data Acquisition (SCADA) equipment.

PRE-BID SITE VISIT: A PREBID SITE VISIT WILL BE HELD ON {insert date}, {insert location}, BEGINNING AT {insert time}. PROSPECTIVE BIDDERS SHOULD MAKE ARRANGEMENTS BY CONTACTING [ ]AT THE TELEPHONE NUMBER LISTED ABOVE. ATTENDEES ARE TO PROVIDE AND WEAR SAFETY BOOTS, HARD HATS, SAFETY VESTS.

FOR DATE AND PLACE OF BID OPENING, SEE "SOLICITATION, OFFER, AND AWARD," STANDARD FORM 1442.

FOR INFORMATION REGARDING BUREAU OF RECLAMATION'S PUBLICATION "RECLAMATION SAFETY AND HEALTH STANDARDS" INCLUDING REVISIONS AT http://www.usbr.gov/ssle/safety/RSHS/rshs.html) WHICH IS APPLICABLE TO WORK UNDER THIS CONTRACT, SEE CLAUSE AT "WBR 1452.223-81 SAFETY AND HEALTH."

This page intentionally left blank.

SECTION B - SUPPLIES OR SERVICES AND PRICES
NAVAJO-GALLUP WATER SUPPLY PROJECT - NEW MEXICO
CUTTER LATERAL – REACH 21 - BOOSTER PLANT

B.1 PRICE SCHEDULE

(a) Offers will be considered for award on the following Price Schedule but no offer will be considered for award on only a part of the Price Schedule.

(b) Offers are subject to terms and conditions of this solicitation.

(c) Quantities in the Price Schedule are estimated quantities for comparison of offers only. Except as provided in contract clause at H.2, Variation in Estimated Quantity, no claim shall be made against Government for overruns or underruns. Contract clause at H.2, Variation in Estimated Quantity does not apply to lump sum items.

(d) See contract clause at WBR 1452.232-81, Payment for Mobilization and Preparatory Work, for CLIN 1-1.

(e) Definitions:

(1) CLIN – Contract Line Item Number.

(f) Note: In accordance with Section 7-9-3.3 of New Mexico Statutes Annotated (NMSA) 1978 and Section 402 of Navajo Nation's Business Activity Tax Statute, it is Contractor's responsibility to ensure that all applicable New Mexico Gross Receipts Tax and Navajo Nation Gross Receipts Tax are included in their price proposal.

(g) In accordance with FAR 52.232-5 (Payments under Fixed-Price Construction Contracts) (b)(2), payment may be approved for materials delivered to Contractor at locations other than the site if Contractor obtains CO approval prior to making arrangements for obtaining the materials. Contractor shall also be required to complete a "Materials on Hand Certificate" which will certify:

(1) Materials described for use on identified contract.

(2) Materials are clearly marked to identify that they belong to contract cited.

(3) Full title for those materials vested in Prime Contractor sited.

(4) Materials are free of liens and encumbrances.

(5) Materials are properly store, secured, and protected against loss or damage.

PRICE SCHEDULE

CLIN	Section	Supplies or Services	Quantity and Unit	Unit Price	Amount
1	WBR 1452.232-81	Mobilization and Preparatory Work	For the lump sum of		$
2	01 31 30	Contract Document Management System	For the lump sum of		$
3	01 56 15	Field Investigation for Existing Utilities	For the lump sum of		$
4	01 78 30	As-built and Final Drawings	For the lump sum of		$200,000
5	01 78 30	Operations and Maintenance (O&M) Manuals	For the lump sum of		$200,000
6	01 80 15	Commissioning	For the lump sum of		$
7	02 41 00	Site Demolition	For the lump sum of		$
8	03 30 00	Concrete	yd^3	$	$
9	03 35 10	Concrete Floor Hardener	ft^2	$	$
10	03 48 00	Plant-Precast Concrete Structures	For the lump sum of		$
11	05 50 00	Metal Fabrications	For the lump sum of		$
12	22 11 35	Prefabricated Pump Station Design	For the lump sum of		$
13	22 11 35	Prefabricated Pump Station Fabrication	For the lump sum of		$
14	22 11 35	Prefabricated Pump Station Installation	For the lump sum of		$

PRICE SCHEDULE

CLIN	Section	Supplies or Services	Quantity and Unit	Unit Price	Amount
15	22 11 35	Prefabricated Pump Station Field Testing and Commissioning	For the lump sum of		$
16	26 05 02	Complete Electrical System	For the lump sum of		$
17	26 24 20	Control and Communication System	For the lump sum of		$
18	26 42 00	Corrosion System(s)	For the lump sum of		$
19	28 10 01	Security System	For the lump sum of		$
20	31 02 10	Water for Dust Abatement	M (1,000) gal	$	$
21	31 02 30	Dust Palliative	acres	$	$
22	31 11 00	Clearing and Grubbing	yd^2	$	$
23	31 14 10	Stripping, Stockpiling and Placement	yd^3	$	$
24	31 23 10	Common Excavation for Site and Structures	yd^3	$	$
25	31 23 10	Rock Excavation for Site and Structures	yd^3	$	$
26	31 23 10	Compacted Backfill for Site and Structures	yd^3	$	$
27	31 23 10	Processing of Site and Foundation Materials	yd^3	$	$
28	31 23 50	Earthwork for Roads	yd^3	$	$
29	31 24 18	Gravel Drain Material for Water Storage Tanks	yd^3	$	$
30	31 32 32	Geotextile	yd^2	$	$

PRICE SCHEDULE

CLIN	Section	Supplies or Services	Quantity and Unit	Unit Price	Amount
31	31 32 36	HDPE Geomembrane for Water Storage Tanks	yd^2	$	$
32	31 37 00	Riprap	yd^3	$	$
33	32 15 10	Gravel Surfacing	yd^3	$	$
34	32 31 10	Chain Link Fence	lin ft	$	$
35	32 91 60	Erosion Control Blanket	yd^2	$	$
36	32 92 20	Seeding	acre	$	$
37	33 11 13	Pipeline Disinfection	For the lump sum of		$
38	33 11 16	PVC Piping	For the lump sum of		$
39	33 11 18	HDPE Piping	For the lump sum of		$
40	33 16 45	Regulating Tank 3B, Welded Steel Water Storage Tank	For the lump sum of		$
41	33 16 45	Filling and Testing Tanks	For the lump sum of		$
42	33 16 45	Water Storage Tank Disinfection	For the lump sum of		$
43	35 21 95	Steel Piping	For the lump sum of		$
44	35 22 14	Valves and Equipment	For the lump sum of		$

TOTAL FOR PRICE SCHEDULE $_____

END OF SUPPLIES OR SERVICES AND PRICES

SECTION C - DESCRIPTION/SPECIFICATIONS

TABLE OF CONTENTS

DIVISION 01 – GENERAL REQUIREMENTS

01 11 00 Summary of Work
01 12 10 Other Contracts
01 14 10 Use of Site
01 14 12 Work Restrictions
01 31 04 Partnering
01 31 19 Project Management and Coordination
01 31 30 Contract Document Management System
01 32 10 Construction Program
01 33 00 Submittals
01 33 26 Electrical Drawings and Data
01 35 10 Safety Data Sheets
01 35 20 Safety and Health
01 35 30 Contractor's Onsite Safety Personnel
01 42 10 Reference Standards
01 46 00 Quality Procedures
01 46 20 Testing Agency Services
01 51 00 Temporary Utilities
01 52 10 Field Office
01 55 00 Vehicular Access and Parking
01 55 20 Traffic Control
01 56 10 Protection of Existing Installations
01 56 15 Protection of Existing Utilities
01 56 20 Existing Fences
01 56 32 Temporary Safety Fence
01 57 20 Environmental Controls
01 57 30 Water Pollution Control
01 57 50 Tree and Plant Protection
01 57 60 Protected Species
01 57 90 Preservation of Historical and Archeological Data
01 60 00 Product Requirements
01 71 20 Surveying
01 74 00 Cleaning and Waste Management
01 78 30 Project Record Documents
01 79 20 Training
01 80 15 Commissioning and Testing

DIVISION 02 – EXISTING CONDITIONS

02 41 10 Demolition

DIVISION 03 – CONCRETE

03 11 10 Concrete Forming
03 20 00 Concrete Reinforcing
03 30 00 Cast-In-Place Concrete
03 35 10 Concrete Floor Hardener
03 48 00 Plant-Precast Concrete Structures
03 62 20 Nonshrink Grout
03 63 00 Epoxy Grout

DIVISION 05 – METALS

05 50 00 Metal Fabrications

DIVISION 09 – FINISHES

09 96 20 Coatings

DIVISION 22 – PLUMBING

22 11 35 Prefabricated Pump Station

DIVISION 26 – ELECTRICAL

26 05 02 Basic Electrical Materials and Methods
26 05 10 Conductors and Cables
26 05 26 Grounding and Bonding
26 05 33 Raceways and Boxes
26 05 90 Wiring Checkout and Tests
26 24 20 Control Boards
26 24 41 Distribution Panelboards
26 42 00 Cathodic Protection Systems
26 42 11 Buried Galvanic Anode Cathodic Protection
26 42 15 Galvanic Anode Cathodic Protection for Welded Steel Tanks

DIVISION 28 – ELECTRONIC SAFETY AND SECURITY

28 10 01 Security and Surveillance System

DIVISION 31 – EARTHWORK

31 02 10 Water for Dust Abatement
31 02 30 Dust Palliative
31 11 00 Clearing and Grubbing
31 14 10 Topsoil Stripping, Stockpiling and Placement
31 23 02 Compacting Earth Materials
31 23 10 Earthwork for Site and Structures

31 23 22 Pipe Trench Earthwork
31 23 39 Disposal of Excavated Materials
31 23 50 Earthwork for Roads
31 23 70 Controlled Low Strength Material (CLSM)
31 24 18 Gravel Drain for Water Storage Tanks
31 31 30 Soil-Applied Herbicide
31 32 32 Geotextile
31 32 36 HDPE Geomembrane for Water Storage Tanks
31 37 00 Riprap

DIVISION 32 – EXTERIOR IMPROVEMENTS

32 15 10 Gravel Surfacing
32 31 01 Fence Grounding
32 31 10 Chain Link Fence
32 91 60 Erosion Control Blanket
32 92 20 Seeding

DIVISION 33 – UTILITIES

33 11 13 Pipeline Disinfection
33 11 16 PVC Pressure Pipe
33 11 18 HDPE Pressure Pipe
33 16 45 Welded Steel Water Storage Tank

DIVISION 35 - WATERWAY AND MARINE CONSTRUCTION

35 21 95 Steel Piping
35 22 14 Valves and Equipment

DIVISION 51 – INFORMATION AVAILABLE TO OFFERORS

51 00 00 Information Available to Offerors
51 00 10 Permit Applications
51 00 15 Property and Utility Owner Agreements
51 00 20 I/O Points List
51 00 25 Pump Control and Sequencing Logic
51 00 30 Utility Acknowledgements
51 00 35 Site Specific Revegetation Plan
51 00 50 Electronic Media Release
51 00 90 Photographs
51 02 21 Surveys

DIVISION 52 – DRAWINGS

52 00 00 Drawings

DIVISION 53 – GEOLOGIC INVESTIGATIONS AND RECORDS

53 10 00 Geologic Investigations
53 20 00 Records of Geologic and Subsurface Investigations

END OF SECTION

SECTION 01 11 00
SUMMARY OF WORK

PART 1 GENERAL

1.01 LOCATION

A. Work is located approximately 26-miles South of Bloomfield, New Mexico in San Juan County.

1.02 PRINCIPAL COMPONENTS OF WORK

A. The principal components of work include the following items:

1. Pre-engineered concrete booster pump station, concrete foundation pad, pipe encasement, yard pipe, fencing, electrical equipment, gravel surfacing, and pipe connections.
2. Installation of secondary regulation tank at Regulation Tank No. 3 site, foundation, electrical equipment, yard pipe, and pipe connections.
3. Erosion and scour restoration/prevention :
   a. Includes a retaining wall, swale, runoff channel, and site regrading.
4. Reinstallation of gravel surfacing at Regulation Tank No. 3 site.
5. Supervisory Control and Data Acquisition (SCADA) equipment and radio communications system.

1.03 SPECIFICATIONS REQUIREMENTS

A. Requirements in Division 1, General Requirements, apply to Divisions 2 through 53.

B. Imperative statements in these specifications are Contractor requirements, unless otherwise stated.

C. Where specifications are written in streamlined form, words “shall be” are included by inference where a colon (:) is used within sentence or phrase.

1.04 DEFINITIONS

A. When specifications use a word or term defined in Federal Acquisition Regulations (FAR), definition of the word or term shall be in accordance with FAR sections in effect at the time solicitation was issued.

1.05 ACRONYMS

A. The following acronyms apply to specifications Divisions 1 through 53:

1. CO: Contracting Officer.
2. COR: Contracting Officer's Representative.
3. OGR: Onsite Government Representative.

PART 2 PRODUCTS

Not Used

PART 3 EXECUTION

Not Used

END OF SECTION

SECTION 01 12 10
OTHER CONTRACTS

PART 1 GENERAL

1.01 MEASUREMENT AND PAYMENT

A. Cost:

1. Include in prices offered in the Price Schedule for other items of work.

1.02 OTHER WORK

A. During work under this contract, other work that may be performed in the vicinity of the work by Reclamation and other contractors includes the following:

1. ZZZccc
2. AAAzzz

B. Cooperate and coordinate with other contractors on access to and use of work areas and contractor use areas. Comply with the clause at FAR 52.236-8 - Other Contracts.

C. Cooperate and coordinate with other contractors on use of temporary utilities.

D. Cooperate and coordinate with other contractors on maintaining dust-free operations.

PART 2 PRODUCTS

Not Used

PART 3 EXECUTION

Not Used

END OF SECTION

This page intentionally left blank.

SECTION 01 14 10
USE OF SITE

PART 1 GENERAL

1.01 MEASUREMENT AND PAYMENT

A. Cost:

1. Include in prices offered in the Price Schedule for other items of work.

1.02 REFERENCE STANDARDS

A. Bureau of Reclamation (Reclamation)

1. Cleaning Manual — Inspection and Cleaning Manual for Equipment and Vehicles to Prevent the Spread of Invasive Species, available at: https://www.usbr.gov/mussels/prevention/docs/EquipmentInspectionandCleaningManual2021.pdf

1.03 SUBMITTALS

A. Submit in accordance with Section 01 33 00 – Submittals.

B. RSN 01 14 10-1, Land Use and Landscape Rehabilitation Plan:

1. Use site on Right-of-Way (ROW) or easements:

a. Show use location and extent of impact. Uses include but are not limited to the following:

1) Buildings and service areas including onsite offices, shops, warehouses, storage areas, fuel and oil storage areas, and fabrication yards.

2) Parking areas, temporary roads, and haul routes.

3) Utilities including gas, air, power, and water lines; fire hydrants; and compressor station.

4) First-aid and medical facilities.

5) Concrete, CLSM, pressure grouting, and aggregate plants. Show sizes, rated capacities, and general features of aggregate processing plant including transporting, storing, screening, and washing facilities; concrete batching and mixing plant; and concrete conveying, placing, and cooling plants.

6) Areas for processing, storing, and disposing of waste materials from construction operations.

7) Temporary fences.

8) Utility hook-ups for Reclamation construction trailer.

b. Describe methods to preserve, protect, and repair, vegetation (such as trees, shrubs, and grass) and other landscape features on or adjacent to jobsite, which are not to be removed and which do not interfere with work required under this contract. Include methods to mark work area limits, protect disturbed areas, and prevent erosion.

c. Describe methods to reseed disturbed areas.

d. Describe methods to preserve, protect, identified cultural resources adjacent to jobsite, which are not to be removed and which do not interfere with work required under this contract. Include methods to mark work area limits, protect sensitive areas, and prevent erosion.

e. Describe methods to protect and repair, existing improvements and utilities at or near jobsite.

f. Describe methods for removing temporary structures and facilities, cleanup, and rehabilitating site after completion of construction activities.

2. Submit revised drawings of changes in use of Government land made during design and erection stages or after use of Government land is in operation.

C. RSN 01 14 10-2, Optional Onsite Security Plan:

1. Schedule for single individual to live on job site to provide full-time inhabitance including estimated or fixed dates.

2. Residence facilities, indicating:

a. If existing job trailer will be used or if a new trailer will be placed onsite.

b. Utilities for residence facility to be used and if modifications are required:

1) Electric.

2) Water.

3) Waste management.

c. Any changes required to existing site security lighting.

3. Map showing residence facility in relation to overall site, including construction trailer.

4. Other items not listed pertinent to additional site use.

1.04 PROJECT CONDITIONS

A. Government land, ROW, and Easements as shown on drawings may be used for required construction facilities:

1. Refer to Staging Area drawing for approved location of construction trailers.
2. Include space and hookups for Government construction trailers.

B. When private land is used for construction facilities, or other construction purposes, make necessary arrangements associated with use of private land:

1. Prior to using land outside of ROW, obtain cultural and environmental approvals in accordance with Section 01 31 19 – Project Management and Coordination and Section 01 57 90 – Preservation of Historical and Archeological Data.

C. Location, construction, operation, maintenance, and removal of construction facilities on ROW or Easements will be subject to approval of COR.

D. Do not interfere with work of other contractors, Navajo Nation or Government in vicinity, or with reservations made by Government for use of such land.

E. Blasting is not allowed.

F. See 01 51 00 – Temporary Utilities.

G. Housing for construction personnel will not be permitted on Government land, except housing for guards or watchmen as may be approved by COR.

H. Limited Contractor-provided housing for onsite security team member subject to approval of COR and RSN 01 14 10-2.

I. Natural Conditions, Contractor to verify (Source):

1. Ambient Temperature Range: Averages 16 to 93 degrees F with extremes of minus 21 to 110 degrees F possible.
2. Annual Average Precipitation: 7.48 inches.
3. Altitude: 5,070 feet.
4. Wind:
   a. Maximum sustained: 9.5 mph.
   b. Maximum gust: 64 mph.

PART 2 PRODUCTS

Not Used

PART 3 EXECUTION

3.01 PROVISIONS FOR GOVERNMENT TRAILER AND PARKING

A. Government trailer is a towed trailer that will be used by the COR as an office area and for storing materials.

B. Provide an area and maintain vehicle access for Government trailer and parking.

1. Locate area outside of construction and haul roads and close to Contractor's job trailer or in another area approved by COR.
2. Gravel surfaced to accommodate trailer and adjacent parking for not less than 4 vehicles.

C. Provide electrical hookup for the Government trailer. Power requirement: 30 amps.

D. Provide portable toilet facilities for exclusive use of Government.

1. Provide separate portable toilets for men and women.
2. Locate toilet facilities within 25 feet of area designated for Government trailer.
3. Self-contained Toilet Units:
   a. Single-occupant units.
   b. Chemical, aerated recirculation, or combustion type.
   c. Vented.
   d. Fully enclosed with a glass-fiber-reinforced polyester shell or similar nonabsorbent material.

3.02 CLEANING

A. Construction Equipment:

1. Before bringing on site, clean construction equipment, to remove dirt, vegetation, and other organic material to prevent introduction of noxious weeds, and invasive plant and animal species.
2. Contractor cleaning procedures shall result in equipment and vehicles being cleaned as well or better than procedures described in Cleaning Manual.
3. OGR will inspect construction equipment following procedures described in Cleaning Manual before allowing equipment onsite.

3.03 MAINTENANCE

A. Clean and service portable toilets weekly or more frequently as directed by COR.

B. Keep approach walks free of mud, water, ice, and snow.

3.04 RESTORATION

A. Restore Contractor use areas to preconstruction condition.

B. Restore temporary construction roads to original contours and make impassable to vehicular traffic when no longer required.

C. After completion of work, regrade and scarify Government land, easements, and ROWs used for construction purposes and not required for completed installation so that surfaces blend with natural terrain and are in a condition that facilitates revegetation, provides drainage, and prevents erosion.

D. Seed disturbed areas used for construction purposes and not required for completed installation in accordance with Section 32 92 20 – Seeding.

END OF SECTION

This page intentionally left blank.

SECTION 01 14 12
WORK RESTRICTIONS

PART 1 GENERAL

1.01 MEASUREMENT AND PAYMENT

A. Cost:

1. Include in prices offered in the Price Schedule for other items of work.

1.02 WORK RESTRICTIONS

A. Allowable work hours are 7:00 am to sunset, Monday through Friday, unless otherwise approved by COR.

B. Alternate work schedules including weekends and holidays may be allowed as approved by COR. Provide COR a written notice 14 working days in advance of proposed alternate work schedule for review and approval.

C. Contractor shall avoid interfering with Reclamation other active construction contracts or operations in the Project vicinity.

PART 2 PRODUCTS

Not Used

PART 3 EXECUTION

Not Used

END OF SECTION

This page intentionally left blank.

SECTION 01 31 04
PARTNERING

PART 1 GENERAL

1.01 MEASUREMENT AND PAYMENT

A. Cost:

1. Include in prices offered in the Price Schedule for other items of work.

1.02 MEETINGS

A. Team scoping/partnering workshop will be held immediately following Notice to Proceed to discuss the specific elements related to the pre-construction services phase of the project. Discussion shall include submittal requirements and process, reconciliation of submittal review comments, project goals, project communication and issue escalation plan, schedule management, risk analysis, construction partnering.

B. Traditional construction Partnering workshops will be held in addition to the initial scoping/partnering workshop.

1.03 INTENT

A. Discuss effectively and successfully implementing work throughout construction. Form an informal management partnership with the Contractor to develop a cohesive building team.

B. Form a bilateral relationship striving for mutual trust, dedication to common goals, and an understanding of individual expectations and values.

C. Develop a cooperative management team drawing on strengths of each team member. Expected benefits include improved efficiency, cost effectiveness and innovation between parties to ensure a quality deliverable completed on time and within budget.

D. Anticipated partnership between the primary contractor, subcontractors, and Reclamation.

E. Partnering Sessions:

1. Facilitated by a third party selected by the Contractor with approval by Reclamation.
2. Held in Farmington, New Mexico.
3. One half-day initial partnering session.
4. Quarterly half day sessions during construction.

5. Half-day final lessons learned session after construction is completed.

PART 2 PRODUCTS

Not Used

PART 3 EXECUTION

Not Used

END OF SECTION

SECTION 01 31 19
PROJECT MANAGEMENT AND COORDINATION

PART 1 GENERAL

1.01 MEASUREMENT AND PAYMENT

A. Cost:

1. Include in prices offered in the Price Schedule for other items of work.

1.02 REFERENCE STANDARDS

A. Bureau of Reclamation (Reclamation)

1. RSHS — Reclamation Safety and Health Standards, including revisions posted at: https://www.usbr.gov/safety/rshs/index.html

1.03 SUBMITTALS

A. Submit the following in accordance with Section 01 33 00 – Submittals.

B. RSN 01 31 19-1, Written Summary:

1. Written summary of upcoming submittals work, and traffic plans. Provide work schedule for next 3-weeks.

C. RSN 01 31 19-2, Off ROW Land Use Coordination:

1. Show expanded use location and extent of impact.
2. Request cultural approvals:
   a. In accordance with Section 01 57 90 – Preservation of Historical and Archeological Data.
3. Request or revise Environmental Permits. In accordance with:
   a. Section 01 57 20 – Environmental Controls.
   b. Section 01 57 30 – Water Pollution Control.
   c. Section 01 57 50 – Tree and Plant Protection.
   d. Section 01 57 60 – Protected Species.
4. Do not use proposed land until approved by COR:
   a. Approvals may require several months.
5. Requirement does not apply to existing commercial facilities.

D. RSN 01 31 19-3, Replacement of Key Personnel:

1. Submit key personnel changes with a minimum notice of 48-hours to CO:

a. Changes in key personnel must be approved by CO prior to work being performed by new personnel.

PART 2 PRODUCTS

Not Used

PART 3 EXECUTION

3.01 PROJECT COORDINATION

A. Coordinate work with COR, other Bureau of Reclamation (Reclamation) staff, Bureau of Indian Affairs, and other local, State, Tribal and Federal Agencies:

1. Oil and Gas Companies.
2. Environmental Services Contractor.
3. Navajo Tribal Utility Authority.
4. Navajo Nation Department of Fish and Wildlife.
5. Cultural Resources Contractor.
6. Jemez Mountain Electric Cooperative.

B. Facilitate on-site work of above listed agencies.

C. 48-Hour Look Ahead Notification:

1. Provide COR, via email, with a rolling 48-hour construction schedule for coordination with Cultural Resources Contractor.

3.02 MEETINGS

A. Following meetings are considered significant, but do not relieve Contractor from responsibility of other meetings required by contract:

1. Preconstruction Meeting:

a. Meet with Government prior to start of construction. Provide, as a minimum, Project Manager or Project Superintendent for Preconstruction Meeting. Review will include, but may not be limited to:

1) Use of premises by Contractor, Government, and public.

2) Construction facilities and controls.

3) Access to work and haul routes.

4) Temporary utilities.

5) Survey layout.

6) Security.

7) Housekeeping procedures.

8) Schedules and sequence of work.

9) Procedures for testing.

10) Procedures for maintaining record documents.

11) Special Site Requirements:

a) Archeological: Refer to Section 01 57 90 – Preservation of Historical and Archaeological Data.

b) Biological: Refer to Section 01 57 60 – Protected Species.

c) Environmental: Refer to:

i. Section 01 57 20 – Environmental Controls.

ii. Section 01 57 30 – Water Pollution Control.

12) Roles and responsibilities:

a) Government organization and personnel.

b) Contractor organization and personnel.

c) Subcontractors.

d) Proposed work schedule.

13) Contract requirements:

a) Progress payments.

b) Invoices.

c) Differing site conditions.

d) Changes.

e) Superintendence by Contractor.

f) Payment for mobilization and preparatory work.

g) Submittal procedures.

h) Emails, faxes, and telephone calls.

2. Preconstruction Safety Meeting:

a. Meet with COR prior to start of construction.

b. Review will include:

1) Safety requirements.

2) Monthly joint safety policy meetings.

3) Weekly toolbox safety meetings.

4) Safety program.

5) Job hazard analysis.

6) Required safety inspections.

7) Government will monitor Contractor's operations for compliance with RSHS.

3. Progress Meetings:

a. Meet weekly with Government to review:

1) Progress made.

2) Difficulties in performing work.

3) Resolution necessary to meet specifications requirements.

4) Status of contract documents (RFI's, submittals, etc.).

5) Updating of progress reports.

6) Other items as determined by COR.

b. Develop meeting agenda and minutes.

4. Design Coordination Meetings:

a. Conduct a minimum of one design coordination meeting with both the Contractor and Government in attendance:

1) Design coordination meeting will be held at Government facilities in Farmington, NM or mutually agreed upon location.

b. Conduct monthly design coordination conference calls with both the Contractor and Government in attendance.

c. The purpose of the meetings will be to discuss coordination issues, programming and control logic modification, report generation, and HMI screen configurations.

d. Design coordination meetings shall be scheduled at a mutually agreed upon date.

e. Provide equipment and paperwork needed for review and discussion of the design coordination subjects.

f. Additional meetings shall be mutually agreed upon.

END OF SECTION

SECTION 01 31 30
CONTRACT DOCUMENT MANAGEMENT SYSTEM

PART 1 GENERAL

1.01 MEASUREMENT AND PAYMENT

A. Contract Document Management System:

1. Payment: Lump sum prices offered in the Price Schedule.

1.02 DEFINITIONS

A. CDMS: Contract Document Management System.

1. Contract Documents include, but are not limited to:
   - a. Specifications.
   - b. Contract Drawings.
   - c. Submittals.
   - d. RFCs: Request for Change (Contractor generated document).
   - e. RFIs: Request for Information (Contractor generated document).
   - f. RFPs: Request for Proposal (Government generated document).
   - g. CMs: Contract Modifications.
   - h. Contractor Proposals.
   - i. Value Engineering Proposals.
   - j. Government Inspection Reports.
   - k. Invoices and Progress Payments.
   - l. Contract Schedules.
   - m. Meeting Agendas and Meeting Minutes.
   - n. Letters and Memos.

1.03 SUBMITTALS

A. Submit in accordance with Section 01 33 00 – Submittals.

B. RSN 01 31 30-1, Approval Data:

1. System provider experience, number of systems operating, references.
2. Documentation of system capabilities.
3. Instructions for system use.

C. RSN 01 31 30-2, Final Data:

1. Government issued electronic device of documents uploaded to CDMS.

1.04 QUALIFICATIONS

A. System provider: At least 5-years successful performance in providing required services.

1.05 CDMS REQUIREMENTS

A. CDMS shall be capable of generating, storing, tracking, categorizing, and managing Contract Documents.

B. Access:

1. Web-based:

a. Contract Documents are stored and accessed by authorized individuals via an internet site.

b. Compatible with web browsers MS Internet Explorer, Apple Safari, Mozilla Firefox and Google Chrome.

2. Ability to upload Contract Documents and make available for user download in supported file formats, minimum:

a. Adobe Acrobat.

b. MS Word.

c. MS Excel.

d. MS Project.

e. Oracle Primavera P6 Project Manager.

f. Autodesk AutoCAD Civil 3D, ver. 2023.

3. Allow Contract Documents to be prepared by the Contractor or by Government:

a. Preparing organization will control access of documents. See Document Security and Backup paragraph below.

4. Contractor and Government shall each have a project manager for CDMS:

a. Each project manager shall have capabilities to assign users within their organization and to assign user rights which control access to documents based on user class and document type.

b. Each organization shall be capable of defining its access hierarchy.

c. Inclusion of users will be prerogative of organizational project manager.

d. Government shall be able to create and modify project properties (i.e. Contractor, project location, description, bid amount, project directory, etc.).

5. Email notifications shall be automatically sent to selectable users when new documents are submitted and available for viewing, or alerts are generated. Examples:
   a. Updates to project information (e.g. entry of a new submittal);
   b. Changes to project information (e.g. approval of a submittal);
   c. Alerts (e.g. submittal under review for greater than 15-days without action).
6. Ability to link files; examples:
   a. RFP linked to a CM.
   b. Submittal linked to a Specification Section or Drawing.

C. Reports:

1. Generate reports that list and sort documents by status, examples include:
   a. Submittals that have been approved.
   b. Invoices paid to date.
   c. RFIs under review.
2. Generate alerts when documents requiring action approach or exceed allowable time.
3. Generate customizable summary reports, examples include:
   a. Submittal Turn-around.
   b. RFI Turn-Around.
   c. CM Processing Turn-Around.
   d. Total CM costs.
   e. Total CM Request Exposure.
4. Reports shall be printable, exportable as searchable pdf or printer friendly HTML, and exportable to Excel, XML, or CSV.
5. Ability to link from an item in a report directly to item by clicking on it:
   a. For example: in a submittal report, clicking on a submittal that is 15-days old takes you directly to information on that submittal.
6. Capable of producing a complete and logically organized set of documents within CDMS in both pdf and xml format.

D. Document Security and Backup:

1. SSL encryption for secured data exchange between browser and server (Secure access to documents and information).

2. Allow document access security until authoring party chooses to share it with others:
   a. Show parties that have access to a document.
   b. Extent of document sharing shall be determined by authoring party.
   c. Once documents are shared, track documents so that changes cannot occur without a record of changes.
3. Backup/Archiving to FTP site of documents to which an organization has access on a regular (minimum monthly) basis:
   a. Backups shall be in pdf format.
4. Documents shall be downloadable to FTP sites where Government and other organizations can each access their own data confidentially.

E. General Tracking and Control:
1. Documents shall be grouped into categories (Submittals, RFC, RFI, RFP, CM, Payments, Daily Inspection Reports, Meeting Minutes).
2. CDMS shall track:
   a. When documents were received or returned, as well as status of documents (e.g. Under Review; or Returned, Approved or Rejected, etc.).
   b. Document changes including who entered or changed document and date change was made.
   c. When a reviewer has opened an item.

F. Submittal Tracking and Control:
1. Ability to create master list of submittals ("Schedule of Submittals").
2. Supply standard submittal form for entering information. CDMS shall allow customizing of standard submittal form. Contractor shall be able to enter submittal summary information (required submittal number, title, description, due date, and specification section shall be required fields) and then upload submittal data in electronic format.
3. Track date received, date response due, date returned, and approval status:
   a. Status designations may be modified to fit Government standard designations – Approved, approved subject to identified changes, or not approved.
4. Supply Submittal Tracking form for Government to enter review comments and action taken. CDMS shall allow customizing of submittal tracking form.
   a. Allow for Government to route submittal to third parties by generating design-review transmittals with each submittal package item, to track status of individual sub-items within submittal package, and to route each sub-item to appropriate reviewers.
5. Ability to generate automatic notification after specified days without response.

G. RFI Tracking and Control:

1. Supply standard RFI form to enter information.
2. Ability to create or attach documents to the RFI form or links to other documents within CDMS.
3. Ability for Government to route RFI to appropriate reviewers and for reviewers to enter comments into standard response form.

H. Inspection Reports Tracking and Control:

1. Ability to attach Government standard inspection and report forms into CDMS and ability to create customizable inspection forms in CDMS. Typical forms:
   a. Daily Inspection Report (DIR).
   b. Survey requests.
   c. Plant inspection reports.
   d. Testing reports.
2. Ability to link or attach photos to forms and link forms to other documents within CDMS.

I. Contract Modifications:

1. Supply standard Contractor Proposal form with ability to attach documents and link to other documents within CDMS.
2. Supply ability to upload Government's standard CM form and RFP forms, or create an acceptable alternative, to enter information.
3. Ability to attach documents to these forms, and link to other documents within CDMS.
4. Ability for Contractor to respond to RFP and CM form with Cost and Time impacts.
5. Ability to track date CM issued and date responded, with automatic notification after specified days without response.

J. Cost Tracking and Payment Request Management:

1. Ability to import payment bid items cost from a MS Excel spreadsheet.
2. Ability to edit percent complete and payment amount each month. Format to be spreadsheet, e.g. items available for editing at once, rather than needing to edit one item at a time, save, open next item and edit that, etc.

K. Correspondence:

1. Ability to generate letters and memos.
   a. Ability to attach documents to letters and memos, and to reference other documents within CDMS.
   b. CDMS shall have ability to automatically assign sequential numbers to letters and memos.

2. Ability to generate responses to letters and memos.
   a. System automatically generates memo suffixes, e.g. 1st response to Memo 32 to be 32.1, 2nd response to be 32.2, etc.
3. Official correspondence from Government to Contractor shall contain Government's official letterhead and corresponding logos.
4. Ability to generate meeting agendas and meeting minutes and to attach documents to minutes.
   a. CDMS shall automatically assign sequential meeting numbers.

L. Miscellaneous Tracking and Controls. Ability to:

1. Generate reports tracking RFCs, RFIs, RFPs, CMs, Submittals, Payments, Memos, DIR's, survey requests, plant inspection reports and testing reports.
2. Ability to filter logs based on criteria e.g., for Submittals:
   a. Specification Section, Days Out, Status (approved, partially approved, approved subject to identified changes and resubmit, or not approved.).
   b. RFI's: Days out, Status (Open/Closed), Specification Section/Dwg No., and Responsibility/Ball-In-Court.
3. Sort Logs based on a criteria, e.g. for Submittal, Specification Section, Days Out, Status, or other criteria determined by COR.
4. Supply forms to match Government's CM Form and Progress Payment Form or other forms when needed.
5. Track Cost Exposure with links to RFI and CM requests.
6. Measure productivity benchmarks on a project such as computing average review days for RFIs and submittals, categorize CMs, and track total CM percentages by category.
7. Keyword search of documents in database.
8. Allow online Payment Requests by Contractor.

M. Budget and Funding Source Tracking:

1. Ability to enter funding sources and assign contract line items to multiple funding sources.

PART 2 PRODUCTS

2.01 SOFTWARE

A. Procore, as manufactured by Procore, www.Procore.com, or approved equal with the following essential characteristics: Capable of performing requirements of Part 1 and Part 3.

PART 3 EXECUTION

3.01 IMPLEMENTATION

A. CDMS shall be in place and operating before Contractor transmits Contract Documents to Government, except RSN 01 31 30-1, Approval Data:

1. CDMS operation includes COR, or other authorized Government representative, having program control to assign users and user rights to Government personnel to access appropriate areas of system.

B. Contractor shall input Schedule of Submittals before making submittals. Include:

1. RSNs listed in Table 01 33 00A - List of Submittals.
2. Scheduled submittal date.

C. Contractor shall provide a report of submittal status monthly or as requested by COR. Submittal status report shall be in a table format and include:

1. Required Submittal Number (RSN).
2. Section Title.
3. Submittal Title.
4. Date Submitted.
5. Date of Response.
6. Approval Status (Approved, Partially Approved, Approved Subject to Identified Changes and Resubmit, or Not Approved).
7. Days in Review.
8. Due Date.

D. CDMS shall be operational until final project closeout.

END OF SECTION

This page intentionally left blank.

SECTION 01 32 10
CONSTRUCTION PROGRAM

PART 1 GENERAL

1.01 MEASUREMENT AND PAYMENT

A. Costs:

1. Developing Baseline Schedule: Include in the price offered in the Price Schedules for Mobilization and Preparatory Work.
2. Updating and Using Construction Program: Include as part of Contractor's overhead.

1.02 DEFINITIONS

A. Schedule: Critical Path Method (CPM) of planning and scheduling a construction project where activities are arranged based on activity relationships and network calculations determine when activities can be performed and critical path of the project.

B. Project Calendar(s): Cross reference of numerical work days with calendar days. Project calendars serve as the basis for day/date conversion and assign work days and non-workdays.

C. Resources: Equipment, labor or crews, materials, subcontractors, fabricators, manufacturers, and consultants.

D. Out of Sequence Work: An activity that starts before its predecessor activities are completed.

1.03 REFERENCE STANDARDS

A. Associated General Contractors of America (AGC)

1. AGC Manual — Construction Planning and Scheduling Manual, 2nd Edition

1.04 SUBMITTALS

A. Submit the following in accordance with Section 01 33 00 – Submittals:

1. Furnish database files in format compatible with Oracle Primavera P6 Professional Project Management.
2. Furnish schedule and analysis data on DVD, USB drive or other electronic device approved by the Government.
3. Upon request, provide information and data used to develop and maintain Construction Program to CO.

B. RSN 01 32 10-1, Representative Information:

1. Designation of authorized representative to develop and maintain Construction Program. Include resume with training and experience.

C. RSN 01 32 10-2, Baseline Schedule:

1. Include:

a. Construction Program/Schedule database.

b. Definition of project calendars.

c. Primavera layout file (.plf).

d. Gantt chart (Bar chart) for project on 11- by 17-inch print(s) and in portable document format (.pdf).

e. Activity report including logic constraints consisting of predecessors, successors, and constraint dates.

f. Tabular listings of resources and resource limitations used to produce baseline schedule. Correlate resources with schedule assumptions and offered price. Resource listings may be independent of schedule database.

g. Narrative explanation of project schedule development. Include impacts of resource limitations and weather conditions on project schedule development. Include planned number of work hours per day and hours per day for subcontractors.

D. RSN 01 32 10-3, Updated Schedule Reports:

1. This submittal is required for a proper invoice for progress payments in accordance with the clauses at FAR 52.232-27 - Prompt Payment for Construction Contracts and WBR 1452.232-82 - Other Invoice Requirements.

2. Include:

a. Construction Program database with updated activity and milestone data.

b. Definition of project calendars if revised from baseline calendars.

c. Primavera layout file (.plf).

d. Gantt chart for project on 11- by 17-inch print(s) and in portable document format (.pdf).

e. Narrative report specifically stating status of project:

1) When negative float exists, cite specific actions and conditions which caused "behind schedule" condition and provide proposed course of action to complete the project within the specified delivery time. When float changed from previous month’s updated schedule, explain reason for change.

2) List of Contractor-initiated changes to current schedule stating reason for action taken and unresolved issues relating to the

Construction Program. Government reserves the right to reject Contractor-initiated changes to current schedule which negatively impact Government action which was initiated on the basis of current schedule.

3) Discuss contract milestones and significant activities that were started, continued, or completed during the update period or scheduled during the next update period.

f. Submittal Register:

1) List submittals as listed in Table 01 33 00A – List of Submittals.

2) Update Submittal Register monthly to include submittals and revised submittals. Register fields shall include RSN name and number, date submitted, date of response, status (e.g., approved, not approved, resubmittal required).

3) This register document is separate from scheduling database.

E. RSN 01 32 10-4, Time Impact Analysis:

1. Include:

a. Construction Program database with proposed revised activity and milestone data.

b. Proposed revised schedule due to change or delay. Highlight or list added, changed, or deleted activities.

c. Primavera layout file (.plf).

d. Gantt chart for project on 11- by 17-inch print(s) and in portable document format (.pdf).

e. Narrative report explaining results and conclusions.

F. RSN 01 32 10-5, Schedule of Values:

1. Breakdown, in sufficient detail, for lump-sum Contract Line Item Numbers listed in the Price Schedules to determine the value of progress payments.

2. Do not include mobilization and preparatory work item.

1.05 QUALIFICATIONS

A. Representative: Experienced in developing and maintaining construction schedules and knowledgeable of activities and progress on-site to develop and maintain accurate and reliable schedules.

1.06 GENERAL

A. Develop, maintain, and use Construction Program to plan, monitor, evaluate, and report accomplishment of work.

1.07 SCHEDULES

A. Prepare construction schedules using Critical Path Method outlined in AGC Manual. Use a computer software program to perform mathematical analysis of scheduling data:

1. Prepare schedule based on required sequence and interdependence of activities. Logically sequence activities.
2. Prepare detailed activity network for accomplishing required work organized by Work Breakdown Structure (WBS). Utilize WBS in lieu of activity codes for organization of schedule. If activity codes are utilized in addition to WBS, use unique activity code names assigned as project codes rather than global codes.
3. Activities except "Award" shall have predecessor activities and activities except "Contract Complete" shall have successor activities.
4. Meet contract requirements; milestone(s) in accordance with the clause at H.6, Commencement, Prosecution, and Completion of Work; and relevant clauses and specification sections. Include interim milestone dates, Government interface dates, contract completion date, and other time or seasonal constraints specified in contract documents.
5. Include work of subcontractors, Government interfaces, and contract milestones.
6. Adjust Construction Program/schedule for seasonal weather conditions. Provide a narrative explaining the expected weather and plan for incorporation in schedule. Consider work influenced by high or low ambient temperatures or precipitation. Utilize Primavera P6 calendars to depict historical weather days that impact work. Assign weather calendars to work impacted by weather.
7. Define activities to level of detail resulting in their durations being no greater than 20-workdays:
   a. Durations for administrative activities (e.g., submittals and reviews) fabrication, manufacturing, and typical level of effort activities (e.g., dewatering, storm water management) will not be subject to workday duration limitation.
8. Include separate activities for submittal preparation and submittal reviews when submittal addresses work that involves significant quantities, long lead times, is on the critical path or near critical path, or as requested by COR. Assign Government submittal review activities to a seven-day calendar with durations as specified in Section 01 33 00 – Submittals. Include Required Submittal Number (RSN) in activity description.
9. Include separate activities for fabrication or manufacturing when work involves significant quantities, long lead times, is on the critical path or near critical path, or as requested by COR.
10. Include contract title, contract number, and Contractor's name on transmittal cover sheet and each sheet of Gantt chart.

11. For each activity on Gantt chart, display activity identification number, activity description, planned or original duration, start date, finish date, total float, and calendar identification. Do not display early start and late start fields.

12. Include table of abbreviations used in the schedule, listed and defined alphabetically.

13. Use finish to start logic relationships between activities. Do not utilize start to start, finish to finish, or start to finish logic relationships. Do not use negative lead or lag times.

14. Use durations in units of whole workdays.

15. Provide best estimate of time required to complete activity considering quantity of work, work conditions, location of work, and planned resources for activity.

16. Equate durations of Government reviews and other identified actions to maximum number of calendar days specified in their respective paragraphs.

17. Establish workday calendar(s) and use these in the schedule to translate activity's workday duration into calendar dates. Use unique calendar names; do not use software default calendar names. Save calendars as project calendars, not global calendars.

B. Baseline Schedule:

1. Represents Contractor's as-planned approach to accomplishing the work. Do not include actual start dates, percent completes, or actual finish dates.

C. Updated Schedule:

1. Meet monthly with COR at Government's project office, or at a location approved by COR, to review progress made to end date of progress payment period. Establish dates that activities were started and completed and remaining duration for each activity started but not completed during the period:

   a. Discuss and mutually agree upon changes to the schedule.

   b. Out-of-sequence activities are not allowed. Revise logic to reflect change in work plan.

   c. Finalize updated Construction Program database with mutually agreed upon changes.

2. Following receipt of executed contract modification, incorporate activity data stipulated in modification into current schedule for inclusion in next scheduled progress update. Provide appropriate logic relationships for revised activities.

3. Assign a unique project file name for each schedule update.

1.08 TIME IMPACT ANALYSIS

A. Provide time impact analysis for contract changes (e.g., change order, proposed modification, or value engineering change proposal) to support a claim or request for equitable adjustment to the contract due to delay or accelerated schedule.

B. CO may use time impact analysis to determine if time extension or reduction to contract milestone dates is justified:

1. Time impact analysis is required for contract changes whether Contractor's current schedule milestone dates are the same as, earlier than, or later than, those required under Contract.

2. Changes, additions, or deletions to activities; activity durations; activity time frames; or activity predecessors and successors will not automatically determine that extension or reduction of contract time is warranted or due Contractor.

3. Time extensions for performance will be considered only to the extent that Contractor's current scheduled milestone dates exceed contract milestone dates.

C. Float is not for exclusive use by or benefit of either Government or Contractor.

D. Perform time impact analyses using data in most recent approved schedule update prior to change or delay event:

1. Prepare proposed revised schedule and narrative description describing and highlighting changes or delays.

2. Prepare summary comparing results of 2 schedule analyses: One using current schedule data from last approved updated schedule prior to event requiring analysis, and one using proposed schedule data incorporating changes or delays:

a. Show contract milestones and activities whose periods of performance have shifted as result of change which affects production and/or manufacture schedules, material orders, construction seasons, and labor and/or equipment utilization.

b. For activities directly affected by change or delay, include the current and proposed items:

1) Activity description.

2) Types and quantities of major pieces of equipment, principal manpower, and pacing materials (materials that affect activity start, duration, or finish).

3) Activity duration.

4) Narrative containing rationale used in developing the proposed logic relationships and activity data.

c. Data date for impacted schedule used in comparison shall be the same as approved updated schedule data date.

d. Base schedule comparisons on status of work and available float at the time CO directs or proposes change to the work, Contractor submits a value engineering change proposal, or when a delay occurs as shown in approved updated schedule.

1.09 REVIEW AND EVALUATION

A. Baseline Schedule:

1. Within 21 calendar days after receipt of baseline schedule:

   a. CO will approve or not approve proposed baseline schedule.

   b. Upon request from CO, meet with COR for a joint review of proposed baseline schedule.

   c. If schedule is not approved, revise and resubmit within 7 calendar days following date of rejection letter.

2. Do not proceed with onsite work, except mobilization and surveying, until baseline schedule has been approved by Government.

B. Updated schedules:

1. Government will require 14 calendar days after receipt of each monthly updated schedule to review and approve or not approve updated schedule.

2. Submit updated schedule at least 7-days prior to the submission of each invoice request for progress payment.

3. If updated schedule is not approved, revise and resubmit updated schedule within 7 calendar days following date of rejection letter.

C. Failure to include elements of the work in schedules will not release Contractor from completing required work under the contract.

D. Performance will be evaluated by Government using approved CPM schedules.

1.10 FAILURE TO COMPLY

A. Failure to comply with requirements of this Section shall be grounds for determination by CO that Contractor is not prosecuting the work with sufficient diligence to ensure completion within specified time.

B. CO may terminate the Contractor's right to proceed with the work, or separable part of it, in accordance with default terms of this contract.

PART 2 PRODUCTS

Not Used

PART 3 EXECUTION

Not Used

END OF SECTION

SECTION 01 33 00
SUBMITTALS

PART 1 GENERAL

1.01 MEASUREMENT AND PAYMENT

A. Cost:

1. Include in prices offered in the Price Schedule for other items of work.

1.02 REFERENCE STANDARDS

A. American Society of Mechanical Engineers (ASME)

1. ASME Y14.1-2020 — Decimal Inch Drawing Sheet Size and Format

B. National Institute of Building Sciences (NIBS)

1. NIBS NCS-2014 — United States National CAD Standards, Version 6

1.03 DEFINITIONS

A. Days: Calendar days.

B. Required Submittal Number (RSN): Identifies items to be submitted together as a complete submittal.

C. Submittal Types, as listed in Table 01 33 00A – List of Submittals:

1. A – Action:
   a. Government will respond as to adequacy of submittal.
   b. Action submittals: Considered to be "shop drawings" within terms of the clause at FAR 52.236-21, Specifications and Drawings for Construction.
2. I – Informational:
   a. Government will acknowledge receipt of Informational submittals.
   b. Government may reject an Informational submittal when submittal does not comply with contract. Contractor shall correct mistakes or deficiencies in rejected Informational submittals and resubmit.
   c. Informational submittals: Considered to be "shop drawings" within terms of the clause at FAR 52.236-21, Specifications and Drawings for Construction, except that approval by Government is not required.

D. CDMS: Contract Document Management System.

E. Record As-built Drawings:

1. Set of full-size, hard-copy drawings that contain both Government drawings furnished with this contract and Contractor-produced drawings necessary to clearly identify as-built conditions of the completed project.

F. Final Drawings:

1. Complete electronic set of drawings produced by the Contractor as required by these specifications, updated to reflect all changes made in the field during construction.

G. Operations and Maintenance (O&M) Manuals:

1. Final documentation for functional elements, equipment and systems installed in the finished work, including all information necessary for Government personnel to operate, maintain, and troubleshoot such elements, equipment and systems in a safe, clear, effective, and efficient manner. Include instructions, final drawings and equipment certifications for each element of work.

H. Design Calculations:

1. Calculations and verifications specified in the Government-furnished contract documents. Design calculation and technical requirements are described in relevant specification sections.

2. Design calculations shall be certified by a registered professional.

I. Schedule of Values (SOV):

1. Detailed cost breakdown for construction products and execution activities for each lump sum Contract Line Item Number (CLIN) shown in the Section B Price Schedule. Include separate SOV line items for each major product purchase, execution activity, and/or sequential processes required to complete the work associated with each lump sum CLIN. Do not include costs associated with RSN preparation and submission. The SOV will be used to accurately assess and confirm progress payment amounts for each CLIN.

1.04 SUBMITTAL REQUIREMENTS

A. In case of conflict between requirements of this section and requirements included elsewhere in these specifications, requirements included elsewhere take precedence.

B. General:

1. Prepare in English.

2. Label with contract number, title, and RSN.

3. Measurement units: US Customary Units.

4. Provide unique transmittal number for each submittal.

C. Drawings:

1. Minimum identification in title block:

   a. Contract number and title.

   b. Contractor's or supplier's title and drawing number.

   c. Date.

2. Reserve 3- by 3-inch space next to title block for review stamps.

3. Print Size: D size (22- by 34-inches) as defined by ASME Y14.1.

4. Draw to scale using computer drafting or drafting equipment, unless otherwise specified:

   a. Computer drafted drawings:

      1) In accordance with NIBS NCS.

      2) Electronic file format: Compatible with AutoCAD, Version 2018 or later.

      3) Compile using "eTransmit" utility in AutoCAD.

   b. Drawing prepared with drafting equipment, when allowed: Lettering shall be neat.

5. Drawings designated as "Government Format" in specifications:

   a. Computer drafted.

   b. Government will provide electronic AutoCAD format template.

   c. Title block and sheet format:

      1) As shown on Standard Drawing 40-D-7102.

      2) Government will provide template.

      3) Government will provide specific title block information to be used.

6. Final Drawings:

   a. Computer drafted.

   b. Government will provide electronic AutoCAD format template.

   c. Show as-built changes, including revision dates, made during installation. Indicate changes by clouding.

   d. Electronic Files: On Reclamation issued USB Drive.

D. Product Data:

1. Mark manufacturer's data for commercial products or equipment, such as catalog cut sheets:

   a. Identify manufacturer's name, type, model, size, and characteristics.

b. Illustrate that product or equipment meets requirements of specifications.

c. Mark items to be furnished in a manner that will photocopy (no highlighter).

d. Strike through items that do not apply.

E. Certifications:

1. Certifications by a registered professional: Signed and sealed by registered professional:

a. Not required for non-design work.

2. Manufacturer's certifications: Signed by authorized representative of manufacturer.

F. Manuals:

1. Copies:

a. Printed copies: Bound and indexed.

b. Electronic copies: Searchable Adobe .pdf on Reclamation issued USB Drive:

1) Bookmark longer files to assist in navigating file.

2) Electronic files may be submitted as separate parts of a manual. After each separate electronic file is approved, compile each approved electronic file to assemble an entire manual which shall be consistent with final manual submittal.

2. Contents:

a. Parts identification lists, lists of special tools, and accessories.

b. Schematics and wiring diagrams.

c. Detailed instructions for installing, operating, lubricating, and maintaining equipment.

d. As-built drawings, photographs, and test records or reports if required by specifications.

G. Photographs:

1. Digital files: In .jpeg or similar format.

H. Samples and Color Selection Submittals:

1. Label with complete manufacturer's product and color identification.

2. Include type and quantity of materials specified in the referenced section in each "set" of samples.

3. Samples: Representative of product to be installed. Xerographic sheets for color selection are not acceptable.

4. Color Chips: Sample paint chips. Ink color reproductions are not acceptable.
5. Label each sample, sample kit, set of color chips, or color chart with contract number and title.
6. Government will select architectural color and pattern after product approval.

1.05 SUBMITTALS PROCEDURES

A. Submit only checked submittals. Submittals without evidence of Contractor's approval will be returned for resubmission.

B. Submit complete sets of required materials for each RSN as specified in "Submittals Required" column in Table 01 33 00A – List of Submittals. A complete set includes all listed items for RSNs with multiple parts.

C. Submit sets specified in "Sets to be sent:" columns in Table 01 33 00A – List of Submittals:

1. Submittals identified with "CDMS" in "Sets to be sent" column shall be submitted electronically in accordance with Section 01 31 30 – Contract Document Management System.
2. Submittals identified with "CDMS" in the top row of the "Sets to be sent" column require approval (Action) or acknowledgement (Informational) before sending required sets of hardcopy submittals.
3. Submittals identified with "CDMS" in the bottom row of the "Sets to be sent" column require submittal of hardcopy submittals before finalizing submittal in CDMS.

D. Include the following information in transmittal letters:

1. Contract number and title.
2. RSN for each attached submittal.
3. Responsible code.
4. Number of sets for each RSN.
5. Identify submittal as initial or resubmittal.

E. Resubmittal of submittals not approved:

1. Mark changes such that they are readily identifiable and show revision date.
2. Describe reasons for significant changes in transmittal letter.
3. Resubmit returned submittals within 28 days after receiving the comments, unless otherwise directed.
4. Requirements for initial submittals apply to resubmittals.

1.06 REVIEW OF SUBMITTALS

A. Time Required:

1. Submittal review will require 28 days for review of each submittal or resubmittal, unless otherwise specified.
2. Time required for review of each submittal or resubmittal begins when complete sets of materials required for a particular RSN are received and extends through digital signature date stamp and upload date in CDMS.

B. Time in Excess of Specified:

1. CO may extend contract completion date to allow additional time for completing work affected by excess review time:
   a. Time extension will be to extent that excess review time caused delay to contract completion date.
   b. Time extension will not exceed time used in excess of specified number of days for review of submittals or resubmittals.
   c. Concurrent days of excess review time resulting from review of two or more separate submittals or resubmittals will be counted only once in extending contract completion date.
2. No time extension will be allowed if Contractor fails to make complete action submittals in sequence and within time periods specified.
3. Adjustment for delay will be made only to extent that:
   a. Approval was required under contract, and
   b. Requests for approval were properly and timely submitted and were approved.
4. Adjustment will be subject to terms of paragraphs (b) and (c) of the clause at FAR 52.242-14, Suspension of Work; however, no such delay shall be deemed to be a “suspension order” as the term is used in that clause.

C. Return of Submittals:

1. Return of submittals will be by CDMS response or hard copy, as applicable.
2. Action Submittals: One set of submittals required for action will be returned either approved, partially approved, approved subject to identified changes and resubmit, or not approved:
   a. Submittals that are not approved shall be revised and resubmitted.
   b. Do not change designs without approval of CO after drawings, documentation, and technical data have been approved.
   c. Exception: Schedules will be either accepted, partially accepted or not accepted.

3. Informational Submittals: Government will acknowledge Informational submittals:

   a. Informational submittals will not be returned when they comply with specifications.

   b. Informational submittals that do not comply with specifications may be returned for resubmittal or additional information may be requested.

1.07 HARD COPY OF TRANSMITTALS

A. Addresses for codes listed in Table 01 33 00A – List of Submittals:

   1. Contracting Officer, Bureau of Reclamation, Attn: UC-840, 125 South State St., Room 6107, Salt Lake City, UT 84138-1147.

   2. Construction Engineer, Bureau of Reclamation, 1235 La Plata Hwy, Farmington, New Mexico, 87401.

   3. Technical Service Center, Bureau of Reclamation, Attn: 86-68160, PO Box 25007, Denver CO 80225-0007; Express Mail: Sixth and Kipling, Building 67, Room 152.

   4. Executive Director Gallup Joint Utilities, PO Box 1270, Gallup, New Mexico, 87305.

   5. Navajo Tribal Utility Authority (NTUA), Attn: Operations Manager, PO Box 1749, Shiprock, NM 87420.

B. Send original transmittal letter with appropriate number of sets to office listed in "Responsible Code" column in Table 01 33 00A – List of Submittals:

   1. Responsible codes starting with "86-6" are located in the Technical Service Center. Send these submittals to the TSC address shown above.

C. Send copy of transmittal letter with appropriate number of sets to offices that are not the responsible code but show "No. of sets to be sent to" in Table 01 33 00A – List of Submittals.

D. Provide copy of transmittal letter on CDMS.

E. When "No. of sets to be sent to" is 0, send a copy of transmittal letter to that office.

F. Submittals required by the specifications, but not listed in Table 01 33 00A – List of Submittals:

   1. Submit in accordance with this section.

   2. Submit to CE, unless otherwise specified.

PART 2 PRODUCTS

Not Used

PART 3 EXECUTION

Not Used

Table 01 33 00A – List of Submittals

* Submittal types: A – Action, I – Information
** CO indicates Contracting Officer, CE indicates Construction Engineer, WCAO indicates Western Colorado Area Office, TSC indicates Technical Service Center, NTUA indicates Navajo Tribal Utility Authority
*** R Code indicates Responsible Code.

RSN	Clause or Section Title	Submittals required	Due date or delivery time	Type *	R Code ***	No of sets to be sent to **			
						CO	CE	TSC	Gallup/ NTUA
01 14 10-1	Use of Site	Land Use and Landscape Rehabilitation Plan	At least 28-days before use of Federal land	A	CE	CDMS			
01 14 10-2	Use of Site	Optional Onsite Security Plan	At least 28-days before use of Federal land	A	CE	CDMS			
01 31 19-1	Project Management and Coordination	Written Summary	Monthly once on-site construction begins	A	CE	CDMS			
01 31 19-2	Project Management and Coordination	Off ROW Land Use Coordination	At least 4-months prior to use of land	A	CE	CDMS			
01 31 19-3	Project Management and Coordination	Replacement of Key Personnel	At least 48-hours prior to changes	A	CE	CDMS			
01 31 30-1	Contract Document Management System	Approval Data	Within 7-days of Award	A	CE	0	1		0
01 31 30-2	Contract Document Management System	Final Data	Within 14-days of completion of work	A	CE	0	2		2
01 32 10-1	Construction Program	Representative Information	Within 7-days after receipt of Notice of Award	I	CE	CDMS			
01 32 10-2	Construction Program	Baseline Schedule	Within 21-days after receipt of Notice to Proceed	A	CE	CDMS			

Table 01 33 00A – List of Submittals

* Submittal types: A – Action, I – Information
** CO indicates Contracting Officer, CE indicates Construction Engineer, WCAO indicates Western Colorado Area Office, TSC indicates Technical Service Center, NTUA indicates Navajo Tribal Utility Authority
*** R Code indicates Responsible Code.

RSN	Clause or Section Title	Submittals required	Due date or delivery time	Type *	R Code ***	No of sets to be sent to **			
						CO	CE	TSC	Gallup/ NTUA
01 32 10-3	Construction Program	Updated Schedule Reports	Monthly or with Progress Payments	A	CE	CDMS			
01 32 10-4	Construction Program	Time Impact Analysis	Within 28-days after CO directs a contract change, with any proposal for a future modification, with any value engineering proposal, or with any request or claim for an equitable adjustment to the contract	A	CE	CDMS			
01 32 10-5	Construction Program	Schedule of Values	Submitted and approved before any payment other than bonds and insurance	A	CE	CDMS			
01 35 10-1	Safety Data Sheets	Complete LHM and SDS	At least 14-days before jobsite delivery of hazardous material	I	CE	CDMS			
01 35 10-2	Safety Data Sheets	Updated LHM and SDS	At least 14-days before jobsite delivery of hazardous material not previously listed	I	CE	CDMS			
01 35 20-1	Safety and Health	Safety Program	At least 28-days before beginning onsite work	A	CE	CDMS			
01 35 20-2	Safety and Health	Job Hazard Analyses (JHA) List	At least 28-days before beginning onsite work	A	CE	CDMS			
01 35 20-3	Safety and Health	Monthly Accident Summary Report	First day of each month. See paragraph 3.8 of RSHS.	A	CE	CDMS			

Table 01 33 00A – List of Submittals

* Submittal types: A – Action, I – Information
** CO indicates Contracting Officer, CE indicates Construction Engineer, WCAO indicates Western Colorado Area Office, TSC indicates Technical Service Center, NTUA indicates Navajo Tribal Utility Authority
*** R Code indicates Responsible Code.

RSN	Clause or Section Title	Submittals required	Due date or delivery time	Type *	R Code ***	No of sets to be sent to **			
						CO	CE	TSC	Gallup/ NTUA
01 35 20-4	Safety and Health	Documentation and Records	At least 28-days before beginning onsite work	A	CE	CDMS			
01 35 30-1	Contractor's Onsite Safety Personnel	Qualifications	At least 14-days before beginning on-site construction	I	CE	CDMS			
01 35 30-2	Contractor's Onsite Safety Personnel	Safety Inspection Reports	Once each week	I	CE	CDMS			
01 46 00-1	Quality Procedures	Contractor Quality Control Plan (QC)	At least 28-days before beginning onsite work	A	CE	CDMS			
01 46 00-2	Quality Procedures	Contractor's Daily Report	No later than the end of the following workday	I	CE	CDMS			
01 46 00-3	Quality Procedures	Quality Control Supervisor (QCS) Resume	At least 28-days before beginning onsite work	A	CE	CDMS			
01 46 00-4	Quality Procedures	Contractor's Quality Testing Plan	At least 28-days before beginning onsite work	A	CE	CDMS			
01 46 00-5	Quality Procedures	Summary of Monthly Test Results	Monthly with pay request	I	CE	CDMS			
01 46 20-1	Testing Agency Services	Testing Agency Services Plan	At least 42-days before testing is required	A	CE	CDMS			
01 52 10-1	Field Office	Delivery Schedule	At least 28-days before beginning onsite work	I	CE	CDMS			
01 55 00-1	Vehicular Access and Parking	Initial Digital Recording	At least 21-days before beginning on-site work	A	CE	0	1	0	
01 55 00-2	Vehicular Access and Parking	Post Construction Digital Recording	At least 21-days before leaving site.	I	CE	0	1	0	
01 55 20-1	Traffic Control	Information of Traffic Control Plan (TCP)	At least 70-days before affecting public traffic	I	CE	CDMS			

Table 01 33 00A – List of Submittals

* Submittal types: A – Action, I – Information
** CO indicates Contracting Officer, CE indicates Construction Engineer, WCAO indicates Western Colorado Area Office, TSC indicates Technical Service Center, NTUA indicates Navajo Tribal Utility Authority
*** R Code indicates Responsible Code.

RSN	Clause or Section Title	Submittals required	Due date or delivery time	Type *	R Code ***	No of sets to be sent to **			
						CO	CE	TSC	Gallup/ NTUA
01 55 20-2	Traffic Control	Approved NMDOT Permit(s)	At least 70-days before affecting public traffic	A	CE	CDMS			
01 56 10-1	Protection of Existing Installations	Plan for Protecting Existing Installations	At least 28-days before start of onsite construction work	A	CE	CDMS			
01 56 15-1	Protection of Existing Utilities	Utility Owner Acknowledgment	At least 28-days before start of onsite construction work	I	CE	CDMS			
01 56 15-2	Protection of Existing Utilities	Utility Investigation	At least 28-days prior to submittal of 33 11 10-2 Pipe Laying Diagrams	I	CE	CDMS			
01 57 20-1	Environmental Controls	Copy of Applicable Air Quality Permit	At least 14-days before beginning on-site work	I	CE	CDMS			
01 57 30-1	Water Pollution Control	Updated Stormwater Pollution Prevention Plan (SWPPP)	At least 42-days before start of onsite construction work	A	CE	CDMS			
01 57 30-2	Water Pollution Control	Spill Prevention Control and Countermeasure (SPCC) Plan	At least 42-days before delivery or storage of oil	A	CE	CDMS			
01 57 50-1	Tree and Plant Protection	Protection Plan	At least 28-days before beginning on-site work	I	CE	CDMS			
01 57 90-1	Preservation of Historical and Archeological Data	Alternate Use Area or Borrow Area	At least 28-days before commencing on site construction work	A	CE	CDMS			
01 71 20-1	Surveying	Surveying Plan	At least 28-days before beginning survey work	A	CE	CDMS			

Table 01 33 00A – List of Submittals

* Submittal types: A – Action, I – Information
** CO indicates Contracting Officer, CE indicates Construction Engineer, WCAO indicates Western Colorado Area Office, TSC indicates Technical Service Center, NTUA indicates Navajo Tribal Utility Authority
*** R Code indicates Responsible Code.

RSN	Clause or Section Title	Submittals required	Due date or delivery time	Type *	R Code ***	No of sets to be sent to **			
						CO	CE	TSC	Gallup/ NTUA
01 71 20-2	Surveying	Resume	At least 28-days before beginning survey work; At least 28-days before personnel change	I	CE	CDMS			
01 71 20-3	Surveying	Accuracy Check Results	At least 28-days before beginning survey work	I	CE	CDMS			
01 71 20-4	Surveying	Completed and Reduced Survey Notes	Within 2-days of completing and reducing notes	I	CE	CDMS			
01 71 20-5	Surveying	Original Field Survey Books	Weekly	I	CE	CDMS			
01 71 20-6	Surveying	Quantity Survey Notes and Computations	Accompanying progress payment requests	I	CE	CDMS			
01 71 20-7	Surveying	Workday's Survey Notes	At conclusion of workday if requested by Government	I	CE	CDMS			
01 74 00-1	Cleaning and Waste Management	Waste Production and Disposal Plan	Within 7-days of waste disposal	I	CE	CDMS			
01 74 00-2	Cleaning and Waste Management	Waste Production and Disposal Records	Within 7-days of hazardous waste disposal	I	CE	CDMS			
01 74 00-3	Cleaning and Waste Management	Environmental Consultant Resume	At least 28-days before beginning environmental assessment	I	CE	CDMS			
01 74 00-4	Cleaning and Waste Management	Environmental Site Assessment	Within 14-days of completion of work	I	CE	CDMS			
01 78 30-1	Project Record Documents	As-built Drawings	Monthly once onsite construction begins	A	CE	CDMS			

Table 01 33 00A – List of Submittals

* Submittal types: A – Action, I – Information
** CO indicates Contracting Officer, CE indicates Construction Engineer, WCAO indicates Western Colorado Area Office, TSC indicates Technical Service Center, NTUA indicates Navajo Tribal Utility Authority
*** R Code indicates Responsible Code.

RSN	Clause or Section Title	Submittals required	Due date or delivery time	Type *	R Code ***	No of sets to be sent to **			
						CO	CE	TSC	Gallup/ NTUA
01 78 30-2	Project Record Documents	Final Drawings	Within 28 days of (and no earlier than 60 days prior to) Government issued substantial completion of work	A	CE	CDMS			
01 78 30-3	Project Record Documents	O&M Manuals	Within 14 days of approval of RSN 01 78 30-4	A	CE	CDMS			
						0	2	2	2
01 79 20-1	Training	Final Acceptance and Testing Phase	Within 14-days of completion of work	I	CE	CDMS			
01 80 15-1	Commissioning and Testing	Qualifications	At least 28-days before Commissioning	A	CE	CDMS			
01 80 15-2	Commissioning and Testing	Test Plan	At least 28-days before Commissioning	A	CE	CDMS			
01 80 15-3	Commissioning and Testing	Test Procedures	At least 28-days before Commissioning	A	CE	CDMS			
01 80 15-4	Commissioning and Testing	Test Reports	At least 28-days before Commissioning	A	CE	CDMS			
01 80 15-5	Commissioning and Testing	Discrepancy and Corrections List	At least 28-days before Commissioning	A	CE	CDMS			
01 80 15-6	Commissioning and Testing	Post Testing and Commissioning Documentation	Within 7 days of Commissioning	I	CE	CDMS			
02 41 10-1	Selective Site Demolition	Demolition Plan	At least 28-days before beginning demolition	A	CE	CDMS			
02 41 10-2	Selective Site Demolition	Notification and Permits	At least 28-days before beginning demolition	I	CE	CDMS			
03 11 10-1	Concrete Forming	Formwork Design and Drawings	At least 28-days before beginning concrete work	I	CE	CDMS			

Table 01 33 00A – List of Submittals

* Submittal types: A – Action, I – Information
** CO indicates Contracting Officer, CE indicates Construction Engineer, WCAO indicates Western Colorado Area Office, TSC indicates Technical Service Center, NTUA indicates Navajo Tribal Utility Authority
*** R Code indicates Responsible Code.

RSN	Clause or Section Title	Submittals required	Due date or delivery time	Type *	R Code ***	No of sets to be sent to **			
						CO	CE	TSC	Gallup/ NTUA
03 20 00-1	Concrete Reinforcing	Reinforcement Diagrams and Lists	At least 28-days before beginning concrete work	I	CE	CDMS			
03 30 00-1	Cast-in-Place Concrete	Approval Data	At least 28-days before beginning concrete work	A	CE	CDMS			
03 30 00-2	Cast-in-Place Concrete	Concrete Placement Schedule	At least 28-days before beginning concrete work	I	CE	CDMS			
03 30 00-3	Cast-in-Place Concrete	Certifications	At least 28-days before beginning concrete work	I	CE	CDMS			
03 30 00-4	Cast-in-Place Concrete	Test Reports	Within 3 days of testing, immediately if test failed	I	CE	CDMS			
03 35 10-1	Concrete Floor Hardener	Manufacturer's Instructions	At least 28-days before beginning concrete work	I	CE	CDMS			
03 48 00-1	Plant-Precast Concrete Structures	Certificates	At least 28-days before beginning installation	I	CE	CDMS			
03 48 00-2	Plant-Precast Concrete Structures	Shop Drawings	At least 28-days before beginning installation	I	CE	CDMS			
03 48 00-3	Plant-Precast Concrete Structures	Product data and Test Reports	At least 28-days before beginning installation	I	CE	CDMS			
03 62 20-1	Nonshrink Grout	Packaged Nonshrink Grout Data	At least 28-days before start of onsite construction work	I	CE	CDMS			
03 63 00-1	Epoxy Grout	Approval Data	At least 28-days before start of onsite construction work	A	CE	CDMS			
09 96 20-1	Coatings	Approval Data	At least 42-days before start of onsite construction work	A	CE	CDMS			

Table 01 33 00A – List of Submittals

* Submittal types: A – Action, I – Information
** CO indicates Contracting Officer, CE indicates Construction Engineer, WCAO indicates Western Colorado Area Office, TSC indicates Technical Service Center, NTUA indicates Navajo Tribal Utility Authority
*** R Code indicates Responsible Code.

RSN	Clause or Section Title	Submittals required	Due date or delivery time	Type *	R Code ***	No of sets to be sent to **			
						CO	CE	TSC	Gallup/ NTUA
09 96 20-2	Coatings	Final Approval Data	At least 28-days before start of onsite construction work	A	CE	CDMS			
09 96 20-3	Coatings	Paint Chip Samples	At least 28-days before start of onsite construction work	A	CE	CDMS	1	0	1
09 96 20-4	Coatings	Qualifications	At least 28-days before start of onsite construction work	I	CE	CDMS			
09 96 20-5	Coatings	Quality Control Plan	At least 28-days before start of onsite construction work	I	CE	CDMS			
09 96 20-6	Coatings	Contractor Quality Testing Report	Within 3 days of testing, immediately if test failed	I	CE	CDMS			
22 11 35-1	Prefabricated Pump Station	Qualifications	At least 96-days before start of fabrication	I	CE	CDMS			
22 11 35-2	Prefabricated Pump Station	30 Percent Design	At least 84-days before start of fabrication	I	CE	CDMS			
22 11 35-3	Prefabricated Pump Station	60 Percent Design	At least 63-days before start of fabrication	I	CE	CDMS			
22 11 35-4	Prefabricated Pump Station	90 Percent Design	At least 42-days before start of fabrication	I	CE	CDMS			
22 11 35-5	Prefabricated Pump Station	100 Percent Design	At least 35-days before start of fabrication	A	CE	CDMS			
22 11 35-6	Prefabricated Pump Station	Test Report	At least 35-days before shipping of pump station	A	CE	CDMS			
22 11 35-7	Prefabricated Pump Station	Final Data and Drawings	At Commissioning	I	CE	CDMS			

Table 01 33 00A – List of Submittals

* Submittal types: A – Action, I – Information
** CO indicates Contracting Officer, CE indicates Construction Engineer, WCAO indicates Western Colorado Area Office, TSC indicates Technical Service Center, NTUA indicates Navajo Tribal Utility Authority
*** R Code indicates Responsible Code.

RSN	Clause or Section Title	Submittals required	Due date or delivery time	Type *	R Code ***	No of sets to be sent to **			
						CO	CE	TSC	Gallup/ NTUA
22 11 35-8	Prefabricated Pump Station	Pumping Unit Field Test Procedures	At least 28 days before start of testing	I	CE	CDMS			
22 11 35-9	Prefabricated Pump Station	Pumping Unit Field Test Reports	Within 3 days of testing, immediately if test failed	I	CE	CDMS			
22 11 35-10	Prefabricated Pump Station	Operations and Maintenance Training	At Commissioning	I	CE	CDMS			
26 05 10-1	Conductors and Cables	Approval Data	At least 28-days before start of work	A	CE	CDMS			
26 05 10-2	Conductors and Cables	Construction Documentation	At least 28-days before start of work	I	CE	CDMS			
26 05 20-1	Grounding and Bonding	Approval Drawings and Data	At least 28-days before start of work	I	CE	CDMS			
26 05 20-2	Grounding and Bonding	As-built Drawings	At least 28-days before start of work	I	CE	CDMS			
26 05 20-3	Grounding and Bonding	Test Reports	Within 3 days of testing, immediately if test failed	I	CE	CDMS			
26 24 20-1	Control Boards	Manufacturer's Technical Data	At least 42-days before start of work	I	CE	CDMS			
26 24 20-2	Control Boards	Radio Study Report	At least 42-days before start of work	I	CE	CDMS			
26 24 20-3	Control Boards	Shop Drawings and Manufacturer's Data	At least 42-days before start of work	I	CE	CDMS			
26 24 20-4	Control Boards	Schematic and Wiring Diagrams (Government Format)	At least 42-days before start of work	I	CE	CDMS			

Table 01 33 00A – List of Submittals

* Submittal types: A – Action, I – Information
** CO indicates Contracting Officer, CE indicates Construction Engineer, WCAO indicates Western Colorado Area Office, TSC indicates Technical Service Center, NTUA indicates Navajo Tribal Utility Authority
*** R Code indicates Responsible Code.

RSN	Clause or Section Title	Submittals required	Due date or delivery time	Type *	R Code ***	No of sets to be sent to **			
						CO	CE	TSC	Gallup/ NTUA
26 24 20-5	Control Boards	Graphical Display Samples	At least 42-days before start of work			0	1	1	1
26 24 20-6	Control Boards	Factory Acceptance Test Procedure for Control System	At least 42-days before start of work	I	CE	CDMS			
26 24 20-7	Control Boards	Factory Acceptance Test Report for Control System	At least 42-days before start of work	I	CE	CDMS			
26 24 20-8	Control Boards	Final Drawings and Manual(s)	At Commissioning	I	CE	CDMS			
26 24 41-1	Distribution Panelboards	Approval Data	At least 42-days before start of work	A	CE	CDMS			
26 42 00-1	Cathodic Protection Systems	Certification and Data	At least 42-days before start of work	I	CE	CDMS			
26 42 00-2	Cathodic Protection Systems	Final Data	At least 28-days before start of work	I	CE	CDMS			
26 42 11-1	Buried Galvanic Anode Cathodic Protection	Certification and Data	At least 28-days before start of work	I	CE	CDMS			
26 42 11-2	Buried Galvanic Anode Cathodic Protection	Final Data	At least 28-days before start of work	I	CE	CDMS			
26 42 15-1	Galvanic Anode Cathodic Protection for Welded Steel Tanks	Certification and Data	At least 28-days before start of work	I	CE	CDMS			
26 42 15-2	Galvanic Anode Cathodic Protection for Welded Steel Tanks	Final Data	At least 28-days before start of work	I	CE	CDMS			

Table 01 33 00A – List of Submittals

* Submittal types: A – Action, I – Information
** CO indicates Contracting Officer, CE indicates Construction Engineer, WCAO indicates Western Colorado Area Office, TSC indicates Technical Service Center, NTUA indicates Navajo Tribal Utility Authority
*** R Code indicates Responsible Code.

RSN	Clause or Section Title	Submittals required	Due date or delivery time	Type *	R Code ***	No of sets to be sent to **			
						CO	CE	TSC	Gallup/ NTUA
28 10 01-1	Security and Surveillance System	Approval Drawings and Data	At least 28-days before start of work	A	CE	CDMS			
28 10 01-2	Security and Surveillance System	Extra Materials	At Commissioning	I	CE	CDMS			
28 10 01-3	Security and Surveillance System	Final Software	At Commissioning	I	CE	CDMS			
28 10 01-4	Security and Surveillance System	Final Drawings and Data	At Commissioning	I	CE	CDMS			
31 02 10-1	Water for Dust Abatement	Meter Calibration	At least 28-days before start of work	I	CE	CDMS			
31 02 30-1	Dust Palliative	Proposed Application Area for Dust Palliative	At least 28-days before start of work	I	CE	CDMS			
31 23 02-1	Compacting Earth Materials	Test Results	Within 3 days of testing, immediately if test failed	I	CE	CDMS			
31 23 10-1	Earthwork for Site and Structures	Processing Plan	At least 28-days before start of work	I	CE	CDMS			
31 23 10-2	Earthwork for Site and Structures	Test Results	Within 3 days of testing, immediately if test failed	I	CE	CDMS			
31 23 11-1	Pipe Trench Earthwork	Processing Plan	At least 28-days before start of work	I	CE	CDMS			
31 23 11-2	Pipe Trench Earthwork	Test Results	Within 3 days of testing, immediately if test failed	I	CE	CDMS			
31 23 39-1	Disposal of Excavated Materials	Agreement and Permits	At least 28-days before start of work	I	CE	CDMS			

Table 01 33 00A – List of Submittals

* Submittal types: A – Action, I – Information
** CO indicates Contracting Officer, CE indicates Construction Engineer, WCAO indicates Western Colorado Area Office, TSC indicates Technical Service Center, NTUA indicates Navajo Tribal Utility Authority
*** R Code indicates Responsible Code.

RSN	Clause or Section Title	Submittals required	Due date or delivery time	Type *	R Code ***	No of sets to be sent to **			
						CO	CE	TSC	Gallup/ NTUA
31 23 70-1	Controlled Low Strength Material	Approval Data for CLSM	At least 28-days before start of work	I	CE	CDMS			
31 23 70-2	Controlled Low Strength Material	Pipe Anti-Flotation Plan	At least 28-days before start of work	I	CE	CDMS			
31 23 70-3	Controlled Low Strength Material	Cold Weather Protection Plan	At least 28-days before start of work	I	CE	CDMS			
31 23 70-4	Controlled Low Strength Material	Quality Control Test Results	Within 3 days of testing, immediately if test failed	I	CE	CDMS			
31 24 18-1	Gravel Drain for Water Storage Tanks	Laboratory Test Results	At least 28-days before start of work	I	CE	CDMS			
31 31 30-1	Soil-Applied Herbicide	Use Plan	At least 28-days before start of work	I	CE	CDMS			
31 31 30-2	Soil-Applied Herbicide	Applicator Certification	At least 28-days before start of work	I	CE	CDMS			
31 32 32-1	Geotextile	Certifications	At least 28-days before start of work	I	CE	CDMS			
31 32 32-2	Geotextile	Installation Instructions	At least 28-days before start of work	I	CE	CDMS			
31 32 32-3	Geotextile	Samples	At least 28-days before start of work	I	CE	0	1	1	0
31 32 32-4	Geotextile	Pre-Construction	At least 28-days before start of work	I	CE	CDMS			
31 32 32-5	Geotextile	Post-Construction	At Commissioning	I	CE	CDMS			
31 32 36-1	HDPE Geomembrane for Water Storage Tanks	Qualifications	At least 28-days before start of work	I	CE	CDMS			

Table 01 33 00A – List of Submittals

* Submittal types: A – Action, I – Information
** CO indicates Contracting Officer, CE indicates Construction Engineer, WCAO indicates Western Colorado Area Office, TSC indicates Technical Service Center, NTUA indicates Navajo Tribal Utility Authority
*** R Code indicates Responsible Code.

RSN	Clause or Section Title	Submittals required	Due date or delivery time	Type *	R Code ***	No of sets to be sent to **			
						CO	CE	TSC	Gallup/ NTUA
31 32 36-2	HDPE Geomembrane for Water Storage Tanks	Product Certificates, Test Reports, and Instructions	At least 28-days before start of work	I	CE	CDMS			
31 32 36-3	HDPE Geomembrane for Water Storage Tanks	Geomembrane Installation Plan	At least 28-days before start of work	I	CE	CDMS			
31 32 36-4	HDPE Geomembrane for Water Storage Tanks	Pre-Construction	At least 28-days before start of work	I	CE	CDMS			
31 32 36-5	HDPE Geomembrane for Water Storage Tanks	Construction	At least 28-days before start of work	I	CE	CDMS			
31 37 00-1	Riprap	Approval Data and Test Results	At least 28-days before start of work	I	CE	CDMS			
32 15 10-1	Gravel Surfacing	Gravel Certification	At least 28-days before start of work	I	CE	CDMS			
32 15 10-2	Gravel Surfacing	Geotextile Installation	At least 28-days before start of work	I	CE	CDMS			
32 15 10-3	Gravel Surfacing	Geotextile Certification	At least 28-days before start of work	I	CE	CDMS			
32 31 10-1	Chain Link Fence	Certification	At least 28-days before start of work	I	CE	CDMS			
32 91 60-1	Erosion Control Blanket	Manufacturer's Information	At least 28-days before start of work	I	CE	CDMS			
32 91 60-2	Erosion Control Blanket	Installation Plan	At least 28-days before start of work	I	CE	CDMS			
32 90 20-1	Seeding	Seeding Plan	At least 28-days before start of work	I	CE	CDMS			

Table 01 33 00A – List of Submittals

* Submittal types: A – Action, I – Information
** CO indicates Contracting Officer, CE indicates Construction Engineer, WCAO indicates Western Colorado Area Office, TSC indicates Technical Service Center, NTUA indicates Navajo Tribal Utility Authority
*** R Code indicates Responsible Code.

RSN	Clause or Section Title	Submittals required	Due date or delivery time	Type *	R Code ***	No of sets to be sent to **			
						CO	CE	TSC	Gallup/ NTUA
32 90 20-2	Seeding	Certifications	At least 28-days before start of work	I	CE	CDMS			
33 11 13-1	Pipeline Disinfection	Flushing, Disinfection and Verification Plan	At least 28-days before start of work	I	CE	CDMS			
33 11 13-2	Pipeline Disinfection	Flushing and Disinfection Report	At Commissioning	I	CE	CDMS			
33 11 13-3	Pipeline Disinfection	Bacteriological Report	At Commissioning	I	CE	CDMS			
33 11 16-1	PVC Pressure Pipe	Shop Drawings	At least 28-days before start of work	I	CE	CDMS			
33 11 16-2	PVC Pressure Pipe	Certification	At least 28-days before start of work	I	CE	CDMS			
33 11 16-3	PVC Pressure Pipe	Field Quality Test Procedure	At least 28-days before start of work	I	CE	CDMS			
33 11 16-4	PVC Pressure Pipe	Field Quality Test Results	Within 3 days of inspection, immediately failed	I	CE	CDMS			
33 11 18-1	HDPE Pressure Pipe	Shop Drawings and Certifications:	At least 28-days before start of work	I	CE	CDMS			
33 11 18-2	HDPE Pressure Pipe	Fusion Procedures and Qualifications	At least 28-days before start of work	I	CE	CDMS			
33 16 45-1	Welded Steel Water Storage Tank	Designer, Erection Engineer and Contractor Qualifications	At least 28-days before start of work	I	CE	CDMS			
33 16 45-2	Welded Steel Water Storage Tank	Commercial Products Data	At least 28-days before start of work	I	CE	CDMS			
33 16 45-3	Welded Steel Water Storage Tank	Shop Drawings, Calculations and Design Data	At least 28-days before start of work	I	CE	CDMS			

Table 01 33 00A – List of Submittals

* Submittal types: A – Action, I – Information
** CO indicates Contracting Officer, CE indicates Construction Engineer, WCAO indicates Western Colorado Area Office, TSC indicates Technical Service Center, NTUA indicates Navajo Tribal Utility Authority
*** R Code indicates Responsible Code.

RSN	Clause or Section Title	Submittals required	Due date or delivery time	Type *	R Code ***	No of sets to be sent to **			
						CO	CE	TSC	Gallup/ NTUA
33 16 45-4	Welded Steel Water Storage Tank	Tank Disinfection Plan	At least 28-days before start of work	I	CE	CDMS			
33 16 45-5	Welded Steel Water Storage Tank	Inspection Reports	Within 3 days of inspection, immediately failed	I	CE	CDMS			
33 16 45-6	Welded Steel Water Storage Tank	As-Built Drawings, Manuals, and Data	At Commissioning	I	CE	CDMS			
35 21 95-1	Steel Piping	Shop Drawings	At least 28-days before start of work	I	CE	CDMS			
35 21 95-2	Steel Piping	Commercial Products Data	At least 28-days before start of work	I	CE	CDMS			
35 21 95-3	Steel Piping	Pipe Installation Procedure	At least 28-days before start of work	I	CE	CDMS			
35 21 95-4	Steel Piping	Source Quality Test Reports	At least 28-days before start of work	I	CE	CDMS			
35 21 95-5	Steel Piping	Field Quality Test Results	Within 3 days of inspection, immediately failed	I	CE	CDMS			
35 21 95-6	Steel Piping	Final Drawings	At Commissioning	I	CE	CDMS			
35 11 14-1	Valves and Equipment	Commercial Products Data	At least 28-days before start of work	I	CE	CDMS			
35 11 14-1	Valves and Equipment	Source Quality Testing Certifications and Reports	At least 28-days before start of work	I	CE	CDMS			
35 11 14-1	Valves and Equipment	Service Manuals	At Commissioning	I	CE	CDMS			

SECTION 01 33 26
ELECTRICAL DRAWINGS AND DATA

PART 1 GENERAL

1.01 MEASUREMENT AND PAYMENT

A. Cost:

1. Include in prices offered in the Price Schedule for other items of work.

1.02 SUBMITTAL REQUIREMENTS

A. In addition to the requirements in Section 01 33 00 – Submittals, prepare electrical drawings and data submittals in accordance with the following.

B. Approval Data:

1. Manufacturer's technical catalog data:

   a. Provide technical data for each device or item of equipment.

   b. Include manufacturer's name and address; catalog number, type, style, or model number; electrical ratings; and dimensions.

   c. Where several items are listed on same sheet, indicate items being submitted for approval.

   d. Demonstrate proposed device or item of equipment meets specifications requirements.

   e. Mark catalog data sheet with appropriate bill of material (BOM) item number.

   f. Assemble catalog data sheet into one enclosing cover with bill of material (BOM) index.

C. Approval Drawings:

1. Equipment and cabinet/board/panel layout drawings:

   a. Indicate dimensions of equipment.

   b. Indicate location of devices and items of equipment including nameplates, terminal blocks, wiring ducts, bus, conduit entries, and other features in their relative physical location.

   c. Indicate method of securing equipment to deck, floor, or wall.

   d. Identify each device and item of equipment with a bill of material reference number.

2. Bill of material list or drawing:
   a. Provide information on manufacturer, style, type, rating, quantity, and other identifying information for each device or item of equipment.
   b. Provide unique reference number for each device or item of equipment listed on bill of material.
3. Panelboard schedule and circuit directory:
   a. Show breaker number and connected load.
   b. Use machine lettering for directory entries. Hand written directory entries are not acceptable.

D. Test Reports:
1. Typed, 8 1/2- by 11-inch sheets.
2. Written certification by individual or authorized representative of organization performing the test.
3. Submit multi-page reports in bound folder or three ring binder.

PART 2 PRODUCTS

Not Used

PART 3 EXECUTION

Not Used

END OF SECTION

SECTION 01 35 10
SAFETY DATA SHEETS

PART 1 GENERAL

1.01 MEASUREMENT AND PAYMENT

A. Cost:

1. Include in prices offered in the Price Schedule for other items of work.

1.02 DEFINITIONS

A. LHM: List of Hazardous Materials.

B. SDS: Safety Data Sheet:

1. Referred to as Material Safety Data Sheets in the clause at 52.223-3, Hazardous Material Identifications and Material Safety Data - Alternate 1.

1.03 APPLICATION

A. For the purposes of this contract, "delivered under this contract" in paragraph (b) of the clause at FAR 52.223-3, Hazardous Material Identification and Material Safety Data - Alternate 1, includes materials:

1. Delivered to Government.
2. Incorporated into work.
3. Used by the Contractor during contract performance at the jobsite.

1.04 SUBMITTALS

A. Submit in accordance with Section 01 33 00 – Submittals.

B. RSN 01 35 10-1, Complete LHM and SDS.

C. RSN 01 35 10-2, Updated LHM and SDS:

1. Comply with paragraph (e) of clause at FAR 52.223-3, Hazardous Material Identification and Material Safety Data - Alternate 1.

1.05 DELIVERY

A. Do not deliver hazardous materials to jobsite which are not included on original or previously updated LHM and SDS before receipt of updated LHM and SDS by COR.

PART 2 PRODUCTS

Not Used

PART 3 EXECUTION

Not Used

END OF SECTION

SECTION 01 35 20
SAFETY AND HEALTH

PART 1 GENERAL

1.01 MEASUREMENT AND PAYMENT

A. Cost:

1. Include in prices offered in the Price Schedule for other items of work.

1.02 REFERENCE STANDARDS

A. Bureau of Reclamation (USBR)

1.	RSHS	Reclamation Safety and Health Standards including revisions posted at: https://www.usbr.gov/safety/rshs/index.html
2.	FIST 1-1 (2020)	Hazardous Energy Control Program available at: www.usbr.gov/power/data/fist_pub.html

B. Applicable Tribal and State Safety and Health Regulations for Construction.

1.03 SUBMITTALS

A. Submit the following in accordance with Section 01 33 00 – Submittals.

B. RSN 01 35 20-1, Safety Program:

1. Written safety program in accordance with RSHS.
2. Cover aspects of onsite and applicable off-site operations and activities associated with this contract.
3. Follow outline in Appendix B of RSHS
4. Will not be accepted for review by COR unless it addresses, in order, lettered and numbered per Appendix B, narrative for each applicable item in outline. For items in outline that do not apply to this contract write “Not applicable to Contract” next to number/letter.
5. Generic company safety programs are not acceptable. Safety Program must be site specific for this contract.
6. Submitted and accepted prior to commencing onsite work, including mobilization.

C. RSN 01 35 20-2, Job Hazard Analysis (JHA) List:

1. Provide list of JHA’s to be submitted throughout project.

D. RSN 01 35 20-3, Monthly Accident Summary Report:

1. In accordance with RSHS.

E. RSN 01 35 20-4 Documentation and Records:

1. Submit documentation of medical qualifications less than 12-months old for all onsite respirator users.
2. Submit results of fit tests less than 12-months old for all onsite tight-fitting negative pressure respirators users.

1.04 DOCUMENTATION AND RECORDS

A. Prepare and retain all safety plans, programs, training content, and training records applicable to scope of work and make available to COR unless already included in written safety program. Some examples include but are not limited to:

1. Confined Space and when deemed necessary by existing and/or introduced hazards of Permit Required Confined Space through the Written Program and Training Records.
2. Forklifts and Other Industrial Trucks Training Records.
3. Electrical Safety Requirement Training Records.
4. Emergency Action Plans Written Program and Training Records.
5. Fall Protection Written Program and Training Records.
6. Fire Protection and Prevention Written Program and Training Records.
7. Flammable and Combustible Liquids Written Spill Control Plan.
8. General Safety and Health Provisions, Written Safety Program, and Regular Safety Inspection Records.
9. Hazard Communication Written Program and Training Records.
10. Inorganic Arsenic Training Records, if applicable.
11. Ladder Written Compliance Program and Training Records.
12. Lead Written Program and Training Records.
13. Lockout/Tagout: Refer to RSHS Section 15 Hazardous Energy Control Program (HECP) Training Records.
14. Bloodborne Pathogens Exposure Control Plan, Training Records.
15. Methylenedianiline Training Records, if applicable.
16. Occupational Noise Exposure Written Program and Training Audiometric Testing Records.
17. Personal Protective Equipment (PPE) Hazard Assessments and Training Records.
18. Power Operated Hand Tools Training Records.

19. Respiratory Protection Written Program and Training Records.
20. Safety Training and Education Written Program and Training Records.
21. Scaffolds Training Records.
22. Steel Erection Training Records, if applicable.
23. Welding, Cutting, and Brazing Written Program and Training Records.

1.05 SAFETY AND HEALTH

A. Provide and maintain work environment and procedures that:

1. Safeguard public, Government personnel, and Contractor employees exposed to Contractor operations and activities.
2. Avoid interruptions of site operations and delays in project completion dates.
3. Control costs in contract performance.

B. Do not begin onsite work, including mobilization, until CO accepts Safety Program.

C. Participate in Contractor Safety Program Review meeting prior to mobilization.

D. Minimum work crew shall consist of no less than two (2) people, unless approved by CO.

E. Develop Job Hazard Analyses for each distinct phase of work under the contract:

1. Do not begin phase of work until JHA is acceptable to COR and shared with construction employees.
2. Activities involving hazardous materials shall have appropriate Safety Data Sheet(s) attached to JHA.

F. Comply with RSHS 29 CFR 1926.

G. Correct safety and health violations identified by CO or COR.

H. When Contractor fails or refuses to correct a compliance directive, CO may issue order to stop all or part of the work:

1. When satisfactory corrective action is taken, order to resume work will be issued.
2. Contractor shall not be entitled to extension of time, claim for damage or additional compensation by reason of either directive or stop order.
3. Failure of CO to order discontinuance of Contractor's operations shall not relieve Contractor of responsibility for safety of personnel and property.

I. Maintain accurate records of and report to CO the following occurrences during performance of this contract:

1. Death.
2. Occupational disease.

3. Traumatic injury to employees or public.

4. Property damage in excess of $2,500.

J. Rights and remedies of Government provided in this section are in addition to any other rights and remedies provided by law or under this contract:

1. In event of a conflict between requirements contained in RSHS, specification paragraphs, Contractor's approved Safety Program, referenced safety and health codes, and standards, or U.S. Department of Labor Construction Safety and Health Standards, promulgated under Section 107 of Contract Work Hours and Safety Standards Act (40 U.S.C. 327 et seq.), as amended, most stringent requirement shall prevail.

K. Provide appropriate safety barricades, signs, and warnings.

L. Contractor shall be responsible for providing medical and emergency assistance in timely manner consistent with recognized emergency protocols.

M. In instances where local emergency responders are not readily available, responsibility to provide emergency services shall default to Contractor.

N. Perform all training as required by Federal, State, and local regulations prior to any activity requiring training:

1. Training records must be submitted to COR upon request.

2. In no case shall an employee perform work until all required training is complete.

PART 2 PRODUCTS

Not Used

PART 3 EXECUTION

Not Used

END OF SECTION

SECTION 01 35 30
CONTRACTOR'S ONSITE SAFETY PERSONNEL

PART 1 GENERAL

1.01 MEASUREMENT AND PAYMENT

A. Cost:

1. Include in prices offered in the Price Schedule for other items of work.

1.02 REFERENCE STANDARDS

A. Bureau of Reclamation (USBR)

1. RSHS Reclamation Safety and Health Standards including revisions posted at: https://www.usbr.gov/safety/rshs/index.html

1.03 SUBMITTALS

A. Submit the following in accordance with Section 01 33 00 – Submittals.

B. RSN 01 35 30-1, Qualifications:

1. Contractor's Onsite Safety Professional.

C. RSN 01 35 30-2, Safety Inspection Reports:

1. Prepare detailed weekly safety inspection reports listing noted deficiencies, digital photographs, abatement dates, and follow-up action for all jobsite activities.
2. Include findings of jobsite walk-through with Government representative on inspection reports.

1.04 QUALIFICATIONS

A. Contractor's Onsite Safety and Health Professional:

1. Identify full-time Onsite Safety and Health Professional acceptable to Reclamation.
2. Include resume with current telephone numbers of references, description of safety professional responsibilities on similar construction projects, and copies of training certifications.
3. Individual shall be qualified by virtue of education, training, certification, and experience in professional status which construction safety field has been established.
4. Contractor Onsite Safety and Health Professional shall have no other duties.

5. Competent supervisory employee with current safety and health related training, experience, and duties on at least three projects of similar nature, size, complexity, and work to be performed as current project

6. OSHA Construction 30-Hour Training Course including applicable elective subjects, for example Concrete and Masonry Construction; Confined Space Entry; Cranes, Hoists; Excavations; Fire Protection and Prevention; Materials Handling, Storage, Use and Disposal; Motor Vehicles, Mechanized Equipment Operations; Rollover Protective Structures and Overhead Protection; Signs; Signals and Barricades; Powered Industrial Vehicles; Safety and Health Programs; Scaffolds; Steel Erection; Tools - Hand and Power; Welding and Cutting. Current first aid CPR certification.

7. Knowledgeable of current safety trends, industry practices, and can exercise technical expertise.

1.05 APPLICATION

A. Employ full-time onsite Safety Professional as Contractor's Onsite Safety Professional prior to start of construction:

1. Safety Professional shall devote full time to onsite safety and shall not perform other Contractor work under this contract.

B. Contractor's Onsite Safety Professional authorities, Duties, and Responsibilities:

1. Responsible for effectively implementing Contractor's Safety Program.
2. Coordinate all emergency response activities.
3. Recommend controls for observed or predicted hazards.
4. Full authorization to correct unsafe acts on the spot, including authority to stop work to correct safety and health problems.
5. Lead weekly safety meetings at jobsite.
6. Onsite during all construction activities.
7. Assemble, review, and sign each Job Hazard Analysis (JHA):
   a. Review JHA with employees.
8. Verify correct use of respiratory protection and personal protective equipment.
9. Conduct and prepare weekly safety inspections in conjunction with onsite Government representative listing noted deficiencies, abatement dates, follow -up action. Report shall be available for review onsite.
10. Provide direct oversight and assemble detailed report of all incident reviews, near-misses, accidents, and emergency response or rescue actions.

1.06 QUALITY ASSURANCE

A. Contractor's Onsite Safety Professional:

1. Effectiveness of Contractor's Onsite Safety Professional in prosecuting safety program will be subject to continued review and approval by CO.
2. Should Contractor's safety effort be considered inadequate, CO has the option to require Contractor to replace the full-time qualified Safety Professional at no cost to Government.

B. Safety Program:

1. Effectiveness of Contractor's Safety Program will be subject to continued review and approval by CO.

PART 2 PRODUCTS

Not Used

PART 3 EXECUTION

Not Used

END OF SECTION

This page intentionally left blank.

SECTION 01 42 10
REFERENCE STANDARDS

PART 1 GENERAL

1.01 MEASUREMENT AND PAYMENT

A. Cost:

1. Include in prices offered in the Price Schedule for other items of work.

1.02 REFERENCE STANDARDS

A. Referenced editions of standard specifications, codes, and manuals form a part of this specification to the extent referenced.

B. These specifications take precedence when conflicting requirements occur between specifications and referenced standard.

1.03 JOBSITE REFERENCE STANDARDS

A. Maintain at fabrication site, access to referenced standard specifications, codes, and manuals required for work in progress at fabrication site. Make available for use by Government.

B. Maintain onsite, access to referenced standard specifications, codes, and manuals required for onsite work in progress. Make available for use by Government.

1.04 AVAILABILITY

A. Code of Federal Regulation (CFR):

1. Available online, authorized by the National Archives and Records Administration (NARA) and Government Printing Office (GPO), at www.gpoaccess.gov/cfr/index.html.

B. Federal Specifications, Standards, and Commercial Item Descriptions; and Military Specifications:

1. Copies of Federal Specifications, Standards, and Commercial Item Descriptions may be obtained from GSA Federal Supply Service, see the provision at H.7, Availability of Specifications Listed in the GSA Index of Federal Specifications, Standards and Commercial Item Descriptions, FPMR Part 101-29.

2. Copies of Military Specifications may be obtained from Department of Defense, see the provision at H.8, Availability of Specifications, Standards, and Data Item Descriptions Listed in the Acquisition Streamlining and Standardization Information System (ASSIST).

C. Bureau of Reclamation Documents:

1. Reclamation Safety and Health Standards (RSHS), 2009 edition with revisions, may be downloaded at https://www.usbr.gov/safety/rshs/index.html:

   a. Hard copies of RSHS, stock number 024-003-00204-6, may be purchased from The Superintendent of Documents at the U.S. Government Printing Office (GPO), phone number (202) 512-1800. Hard copies of RSHS are subject to revisions posted on the site shown above:

      1) GPO online bookstore: www.bookstore.gpo.gov/actions/GetPublication.do?stocknumber=024-003-00204-6.

2. Bureau of Reclamation Standard Specifications are designated with an M-number. Copies of individual standards may be obtained from Bureau of Reclamation, Attn: 86-68510, PO Box 25007, Denver CO 80225-0007. Specify standard(s) needed when requesting a copy.

3. Bureau of Reclamation manuals and other publications including significant scientific, technical, and engineering works are available from the National Technical Information Service (NTIS). Information regarding availability and pricing may be obtained by contacting NTIS at the following address:

   United States Department of Commerce
   National Technical Information Service
   5285 Port Royal Road
   Springfield, Virginia 22161
   Telephone: (703)487-4650 or 1-800-553-6847

D. Industrial and Governmental Documents:

1. When a reference has a joint designation (e.g. ANSI/IEEE) these specifications generally cite the proponent organization (e.g. IEEE).

2. Addresses for obtaining industrial and governmental (other than Federal and Bureau of Reclamation specifications and standards) specifications, standards, and codes are listed in Table 01 42 10A - Addresses for Specifications, Standards, and Codes.

Table 01 42 10A - Addresses for Specifications, Standards, and Codes

Acronym	Name and Address	Telephone
AA	Aluminum Association www.aluminum.org	703-358-2960
AASHTO	American Association of State Highway and Transportation Officials www.aashto.org	202-624-5800 800-231-3475

Table 01 42 10A - Addresses for Specifications, Standards, and Codes

Acronym	Name and Address	Telephone
ACI	American Concrete Institute 48331-3439 USA www.concrete.org	248-848-3700
AGC	Associated General Contractors of America www.agc.org	703-548-3118 800-242-1767
AISC	American Institute of Steel Construction www.aisc.org	312-670-2400
ANSI	American National Standards Institute www.ansi.org	202-293-8020
APA/EWA	APA-The Engineered Wood Association www.apawood.org	253-565-6600
API	American Petroleum Institute www.api.org	202-682-8000
ASME	American Society of Mechanical Engineers www.asme.org	800-843-2763
ASTM	ASTM International www.astm.org	610-832-9500
AWWA	American Water Works Association www.awwa.org	303-794-7711
AWS	American Welding Society www.amweld.org	800-443-9353 305-443-9353
BICSI	Building Industry Consulting Services International www.bicsi.org	800-242-7405
CLFMI	Chain Link Fence Manufacturers Institute www.chainlinkinfo.org	301-596-2583
ICC	International Code Council www.iccsafe.org	888-422-7233
ICEA	Insulated Cable Engineers Association www.icea.net	
ICRI	International Concrete Repair Institute www.icri.org	847-827-0830
IEEE	Institute of Electrical and Electronics Engineers www.ieee.org	212-419-7900

Table 01 42 10A - Addresses for Specifications, Standards, and Codes

Acronym	Name and Address	Telephone
ISA	International Society of Automation (ISA) www.isa.org	919-549-8411
ISO	International Organization for Standardization www.iso.org	+41 22 749 01 11
MSS	Manufacturers Standardization Society www.msshq.org	703-281-6613
NAAMM	National Association of Architectural Metal Manufacturers www.naamm.org	630-942-6591
NACE	AMPP: Association for Material Protection and Performance (formerly known as NACE International) www.ampp.org	800-797-6223 281-228-6200
NECA / NEIS	National Electrical Installation Standards www.neca-neig.org	301-657-3110
NEMA	National Electrical Manufacturers Association www.nema.org	703-841-3200
NETA	International Electrical Testing Association www.netaworld.org	269-488-6382
NFPA	National Fire Protection Association www.nfpa.org	800-344-3555 617-770-3000
NIBS	National Institute of Building Sciences www.nibs.org	202-289-7800
NSF	National Sanitation Foundation www.nsf.org	734-769-8010
NNOSHA	Navajo Nation Occupational Safety and Health Administration www.nnosha.org	928-871-6742
NTUA	Navajo Tribal Utility Authority www.ntua.com	800 528-5011
SSPC	AMPP: Association for Material Protection and Performance (formerly known as SSPC International) www.ampp.org	800-797-6223 281-228-6200

Table 01 42 10A - Addresses for Specifications, Standards, and Codes

Acronym	Name and Address	Telephone
TIA/EIA	Telecommunications Industry Association/Electronic Industries Alliance www.tiaonline.org	703 907-7700
UL	Underwriters Laboratories, Inc. www.ul.com	847-272-8800

PART 2 PRODUCTS

Not Used

PART 3 EXECUTION

Not Used

END OF SECTION

This page intentionally left blank.

SECTION 01 46 00
QUALITY PROCEDURES

PART 1 GENERAL

1.01 MEASUREMENT AND PAYMENT

A. Cost:

1. Include in prices offered in the Price Schedule for other items of work.

1.02 DEFINITIONS

A. Quality Assurance: Inspection and tests performed by Government to ensure compliance with terms of contract.

B. Quality Control: Activities performed by Contractor to ensure work conforms to contract requirements.

1. Clause at FAR 52.246-12 - Inspection of Construction, requires Contractor to establish an inspection system to ensure quality.
2. Quality Control includes activities in addition to specified Contractor Quality Testing to ensure work conforms to contract requirements.

C. Contractor Quality Testing: Specified tests shall be performed by Contractor:

1. Government may use test results for Quality Assurance.
2. Contractor may use test results as part of Contractor's Quality Control:
   a. Government anticipates that these tests will be part of Contractor's Quality Control Program, however the tests do not relieve Contractor of providing adequate quality control measures in accordance with clause at FAR 52.246-12 - Inspection of Construction.

D. Definable Features of Work: A definable feature of work is a task which is separate and distinct from other tasks, has separate control requirements, and may be identified by different trades or disciplines, or may be work by the same trade in a different environment.

1.03 SUBMITTALS

A. Submit the following in accordance with Section 01 33 00 – Submittals.

B. RSN 01 46 00-1, Contractor Quality Control Plan (QC):

1. Content of the Quality Control (QC) Plan shall clearly outline Contractors Quality Control Program. This plan shall include, as a minimum, the following to cover

all construction operations, both onsite and offsite, including work by subcontractors, fabricators, suppliers, and purchasing agents:

a. Description of the quality control organization, including a chart showing lines of authority and acknowledgement that Quality Control Supervisor (QCS) staff shall implement the three-phase control system for all aspects of work specified.

b. Staff shall include a Quality Control Supervisor (QCS) who shall report to project superintendent:

    1) An alternate QCS with equal lines of authority to act on behalf of the primary QCS should they not be present on the project site.

    2) Names, qualifications (in resume format), duties, responsibilities, and authorities of each person assigned a QC function.

c. Letter to the QCS, signed by an authorized official of the firm, which describes the responsibilities and delegates sufficient authorities to adequately perform the functions of the QCS:

    1) Including authority to stop work which is not in compliance with the contract.

d. QCS shall issue letters of direction to all other various quality control representatives outlining duties, authorities, and responsibilities:

    1) Letters shall also be furnished to Government.

e. Procedures for:

    1) Scheduling, reviewing, certifying, and managing submittals, including those of subcontractors, offsite fabricators, suppliers and purchasing agents.

    2) Control, verification, and acceptance testing procedures for each specific test to include:

        a) Test name.

        b) Specification paragraph requiring test.

        c) Feature of work to be tested.

        d) Test frequency.

        e) Person responsible for each test.

    3) Tracking:

        a) Preparatory.

        b) Initial

        c) Follow-up control phases and control.

        d) Verification and acceptance tests including documentation.

e) Construction deficiencies from identification through acceptable corrective action:

i. Procedures shall establish verification that identified deficiencies have been corrected.

4) Reporting procedures, including proposed reporting formats.

f. A list of Definable Features of Work. Although each section of the specifications may generally be considered as a definable feature of work, there are frequently more than one definable features under a particular section:

1) List will be agreed upon during a coordination meeting prior to start of construction.

2. Program shall be based upon definable features of work and include three phases for each feature:

a. Preparatory Phase:

1) Performed prior to beginning of work and as detailed below:

a) Review of each paragraph of applicable specifications and references.

b) Review of contract plans or shop drawings.

c) Check to assure that all materials and/or equipment have been tested, submitted, and approved.

d) Check to assure that provisions have been made to provide required control inspection and testing.

e) Examination of work area to assure all required preliminary work has been completed.

f) Physical examination of required materials, equipment, and sample work to assure:

i. Materials are on hand and conform to approved shop drawings or submitted data.

ii. Have been properly stored.

g) Review of appropriate job hazard analyses.

h) Discussion of procedures for constructing work, including review of repetitive deficiencies.

i) Notify OGR 48-hours prior to beginning any required action of preparatory phase as required in quality control specifications.

j) Arrange quality control testing if required.

2) Preparatory Meeting: Conducted by QCS, and attended by the superintendent, other quality control personnel, foreman responsible for definable feature, and Government.

a) Results of preparatory phase actions shall be discussed in Preparatory Meeting and be documented by separate minutes prepared by QCS and attached to daily Contractor's Quality Control Report.

b. Initial Phase:

1) Accomplished at beginning of a definable feature of work.

2) Verify that control for feature of work developed in Preparatory Meeting is implemented and feature of work is performed to the level of workmanship required.

3) Perform as detailed below:

a) Review minutes of Preparatory Meeting.

b) Check preliminary work.

c) Verify adequacy of controls to ensure full contract compliance.

d) Establish levels of workmanship.

e) Resolve all differences.

f) Check safety to include compliance with safety plan and Job Hazard Analysis (JHA).

i. Review JHA with workers.

g) Notify OGR 48-hours in advance of beginning any required action of initial phase as required in quality control specifications.

4) Include an Initial Phase Meeting conducted by QCS and attended by superintendent, other quality control personnel, foreman responsible for definable feature and Government:

a) Results of initial phase actions shall be discussed in Initial Phase Meeting, be documented by separate minutes prepared by QCS and attached to daily Contractor's Quality Control Report.

c. Follow-Up Phase:

1) Perform daily checks to assure continuing compliance with contract requirements, including safety and control testing until completion of particular feature of work.

2) Make checks a matter of record in Contractor's Quality Control documentation.

3) Conduct final follow-up checks and confirm all deficiencies are corrected prior to start of additional features of work.

4) Quality control personnel shall continually refer to standards set in Preparatory Meeting and Initial Phases.

C. RSN 01 46 00-2, Contractor's Daily Report:

1. Submit daily reports no later than the end of the following workday.

2. As a minimum, Contractor's Daily Report shall include the following:

a. Record of all Contractor's activities throughout shift regardless of how minor or complex:

b. Report shall be started at beginning of shift, written during shift, and completed at the end of shift.

c. Finished report shall be prepared in such detail that person not familiar with the day's work could determine what was done and calculate Contractor's direct cost for that day.

d. Report shall state specific safety violations noted during shift including action(s) taken, including:

1) Names of people involved in infraction.

2) Name of person confirming correction.

3) Document significant discussions held between Reclamation and Contractor personnel, or other parties involved with project.

e. Main body of report shall contain:

1) Locations and a detailed description of all work, including:

a) Sketches or photographs where appropriate to assist in description.

b) Description shall reflect what, where, when, why, who, and how work was being performed.

c) Provide:

i. Record of quantities installed.

ii. Specific stations or location of work.

iii. Description by CPM program activity (if applicable).

iv. Show labor classification, work labor force and equipment actually used during shift.

3. Report shall also contain:

a. List of materials and equipment delivered to job site:

1) Materials installed during shift.

2) Materials refused or wasted during shift.

3) Other items to be reported include:

a) Changes in site conditions.

b) Modifications in design and installation.

c) Photographs taken.

d) Environmental compliance or noncompliance.

e) Hazardous waste and material concerns.

f) Landowner contacts.

g) Worker complaints.

h) Potential problems observed.

D. RSN 01 46 00-3, Quality Control Supervisor (QCS) Resume:

1. Designation of authorized individual as QCS to develop and manage quality control processes.

2. Designated QCS Resume.

E. RSN 01 46 00-4, Contractor's Quality Testing Plan:

1. Address methods, procedures, frequencies, and scheduling for performing quality testing as required in other specification sections.

F. RSN 01 46 00-5, Summary of Monthly Test Results.

1.04 QUALIFICATIONS

A. Contractor shall designate employee as Quality Control Supervisor (QCS).

B. Quality Control Supervisor (QCS):

1. Experienced QCS must be graduate engineer, graduate architect, or graduate of construction management, with minimum 4-years' construction experience in charge of quality control for projects similar in nature to that required by this contract, or construction person with 10-years in related QC work.

2. Both QCS and alternate will have authority to stop work if necessary.

3. QCS shall hold no other duties.

1.05 TESTING ACCEPTANCE

A. Acceptance of material shall be based on passing of both quality control testing and quality assurance testing.

B. Government quality assurance testing results will prevail in event of discrepancy between Contractor's test results and Government test results.

PART 2 PRODUCTS

Not Used

PART 3 EXECUTION

3.01 QUALITY ASSURANCE

A. During course of work, Government may perform quality assurance tests. Tests performed by Government will be used to ensure compliance with contract requirements and not as a replacement for specified Contractor quality testing:

1. Upon request, make measuring and testing devises available for use by Government for verification tests.

B. Contractor's QCS:

1. Effectiveness of QCS in prosecuting the QC Program will be subject to continued review and approval by CO.
2. Should QCS's efforts be deemed insufficient Contractor may be required to replace QCS at no additional cost to Government.

C. Contractor's Quality Control (QC) Program:

1. Effectiveness of Contractor's QC Program will be subject to continued review and approval by CO.

END OF SECTION

This page intentionally left blank.

SECTION 01 46 20
TESTING AGENCY SERVICES

PART 1 GENERAL

1.01 MEASUREMENT AND PAYMENT

A. Cost:

1. Include in prices offered in the Price Schedule for items of work requiring applicable testing agency services.

B. Progress Payments: If test reports are not submitted in a timely manner, Contractor will be considered to be in non-compliance and delaying that phase of the work to which the testing applies. CO may retain appropriate amounts of applicable progress payments.

1.02 REFERENCE STANDARDS

A. ASTM International (ASTM)

1.	ASTM C1077-16a	Agencies Testing Concrete and Concrete Aggregates for Use in Construction and Criteria for Testing Agency Evaluation
2.	ASTM D3666-16	Minimum Requirements for Agencies Testing and Inspecting Road and Paving Materials
3.	ASTM D3740-12a	Minimum Requirements for Agencies Engaged in the Testing and/or Inspection of Soil and Rock as Used in Engineering Design and Construction
4.	ASTM E329-14a	Agencies Engaged in Construction Inspection, Testing, or Special Inspection
5.	ASTM E543-15	Agencies Performing Nondestructive Testing

1.03 SUBMITTALS

A. Submit the following in accordance with Section 01 33 00 – Submittals.

B. RSN 01 46 20-1, Testing Agency Services Plan:

1. Include:

   a. Names of agencies to perform sampling and testing.

   b. Agency accreditation to perform specified testing or agency qualifications to perform specified testing.

c. Resumes of personnel performing tests.

d. Samples of report forms.

2. No change in approved plan may be made without written concurrence by COR.

1.04 QUALIFICATIONS

A. Testing agency organization:

1. Agencies testing construction materials: Meet requirements of ASTM E329.
2. Agencies testing concrete and concrete aggregates: Meet requirements of ASTM C1077.
3. Agencies testing soil and rock: Meet requirements of ASTM D3740.
4. Agencies testing bituminous paving materials: Meet requirements of ASTM D3666.

B. Equipment:

1. Calibrate measuring devices, laboratory equipment, and instruments at established intervals.

PART 2 PRODUCTS

Not Used

PART 3 EXECUTION

3.01 CONTRACTOR QUALITY TESTING

A. Employ accredited independent agency to perform sampling, testing, and reporting as required in the following Sections:

1. Section 03 30 00 – Cast-in-Place Concrete.
2. Section 31 23 02 – Compacting Earth Materials.
3. Section 31 23 70 – Controlled Low Strength Material (CLSM).
4. Section 32 15 10 – Gravel Surfacing.
5. Other sections as required.

3.02 GOVERNMENT CONTRACT QUALITY ASSURANCE

A. During the course of the work, Government may perform quality assurance tests. Tests performed by Government will be used to ensure compliance with contract requirements and not as replacement for specified Contractor quality testing:

1. Upon request, make measuring and testing devices available for use by Government for verification tests.
2. If a conflict arises between Contractor quality testing results and Government quality assurance tests, Government testing results will take precedence over Contractor testing results.

END OF SECTION

This page intentionally left blank.

SECTION 01 51 00
TEMPORARY UTILITIES

PART 1 GENERAL

1.01 MEASUREMENT AND PAYMENT

A. Cost:

1. Include in prices offered in the Price Schedule for other items of work.

1.02 REFERENCE STANDARDS

A. Institute of Electrical and Electronics Engineers (IEEE)

1. IEEE C2-12 National Electrical Safety Code (NESC)

1.03 TEMPORARY ELECTRICITY

A. Furnish electric power required for construction.

B. Furnish generators, transmission lines, distribution circuits, transformers, and other electrical equipment and facilities required for obtaining power and distributing power to points of use.

C. Comply with IEEE C2 clearances and spacing for temporary communications and supply lines.

1.04 TEMPORARY WATER

A. Contractor shall provide water required for construction purposes.

1. Determining source, obtaining permits, transporting, and paying fees.

B. Potential Sources:

1. Depending on availability the following entities may have potable water:

a. Navajo Tribal Utility Authority (NTUA):

1) Contact:

a) Navajo Tribal Utility Authority
P.O. Box 170
Fort Defiance, AZ 86504
928-729-6277

b. Navajo Nation Water Code Administration (NNWCA):

1) Contact:

a) Navajo Nation Water Code Administration
Crownpoint Field Office
Bldg. #2543, Chaco Blvd., P.O. Box 1936,
Crownpoint, NM 87313
Monte Chee: Water Code Compliance Officer
Website: www.watercode.navajo-nsn.gov/contact_us.html
Email: mchee_71@yahoo.com
Phone: 505-786-2395

C. Use water which meets specified requirements for water used in testing, concrete, grouting, and other permanent work.

D. Provide means of conveying water to points of use.

E. Remove temporary equipment and facilities upon completion of work under this contract.

F. Measure water with a Contractor supplied calibrated water meter. Meter calibration shall be traceable back to national measurement standards.

G. Calibrate water meter in accordance with national measurement standards.

1.05 TELEPHONE

A. Cellular telephone service is available.

1.06 SANITARY FACILITIES

A. Restroom facilities will not be available to Contractor personnel.

B. Provide sanitary facilities.

PART 2 PRODUCTS

Not Used

PART 3 EXECUTION

3.01 REMOVAL

A. Remove temporary equipment and facilities upon completion of work under this contract.

END OF SECTION

SECTION 01 52 10
FIELD OFFICE

PART 1 GENERAL

1.01 MEASUREMENT AND PAYMENT

A. Cost:

1. Include cost of field office in prices offered in the Price Schedule for other items of work.

1.02 REFERENCE STANDARDS

A. American Society of Heating, Refrigerating, And Air-conditioning Engineers, Inc. (ASHRAE)

1. ASHRAE HSE-12 — HVAC Systems and Equipment (I-P), 2012 Handbook

B. National Fire Protection Association (NFPA)

1. NFPA 10-13 — Portable Fire Extinguishers

C. Public Law (PL)

1. PL 101-336 — Americans With Disabilities Act of 1990

1.03 SUBMITTALS

A. Submit in accordance with Section 01 33 00 – Submittals.

B. RSN 01 52 10-1, Delivery Schedule:

1. For office facility and related items to be furnished.

PART 2 PRODUCTS

2.01 FIELD OFFICE

A. Field Office: Office facility, furnishings, toilet facility, storage shed, and parking area for exclusive use of Government in addition to and separate from office facilities provided for Contractor use.

1. Floor Area: 8 feet wide by 30 feet long.
2. Structurally sound, secure, weather tight enclosure with windows.
   a. At least 1 window shall be an egress window.
3. Flooring: Waterproof laminate.

4. Secure facility using Ground anchors as per manufacturers recommendations and local codes.
5. Steps, ramps and landings shall comply with Americans with Disabilities Act (ADA).
6. Door Locks:
   a. Deadbolt type locking devices.
   b. Doors keyed the same.
   c. Furnish 4 sets of keys.
7. Finished interior walls and ceiling.
   a. One finished separate office at end of trailer, with interior door.
   b. Smoke detector(s) as per code.
8. Electrical:
   a. Wiring system: Complete for generator and temporary power.
   b. Min 30 amp or 50 amp receptacle plugs.

B. Materials and Installations: In compliance with PL 101-336 and applicable Federal, State, and local regulations, laws, codes, and requirements for accommodating individuals with disabilities.

C. HVAC Equipment:
1. Heating: Size in accordance with ASHRAE HSE for minimum 70 degrees F inside temperature under winter outside design conditions applicable to construction site location.
2. Air-Conditioning: Size system in accordance with ASHRAE HSE for maximum 80 degrees F inside temperature under summer outside conditions applicable to construction site location.
3. Ventilation: Mechanical type sufficient for comfort during the change between heating and cooling seasons.
4. Distribution system: Sufficient for uniform heating, cooling, and comfort.
5. Equipment Options: Equivalent heating, ventilating, and air-conditioning in a single combination unit or other combinations.

2.02 PROVISIONS FOR GOVERNMENT TRAILER AND PARKING

A. Government trailer is a towed trailer that will be used by the COR as an office area and for storing materials.

B. Provide an area and maintain vehicle access for Government trailer and parking.

1. Locate area outside of construction and haul roads and close to Contractor's job trailer or in another area approved by COR.
2. Gravel surfaced to accommodate trailer and adjacent parking for not less than 4 vehicles.

C. Provide electrical hookup for the Government trailer. Power requirement: 150 amps.

D. Provide portable toilet facilities for exclusive use of Government.

1. Provide separate portable toilets for men and women.
2. Locate toilet facilities within 25 feet of area designated for Government trailer.
3. Self-contained Toilet Units:
   a. Single-occupant units.
   b. Chemical, aerated recirculation, or combustion type.
   c. Vented.
   d. Fully enclosed with a glass-fiber-reinforced polyester shell or similar nonabsorbent material.

2.03 FURNISHINGS

A. New or "like new" reconditioned furniture listed in Table 01 52 10A – Field Office Furniture Requirements.

Table 01 52 10A - Field Office Furniture Requirements

Item	Number Required	Description
Desk	1	Flat top double pedestal, size 30 inches by 60 inches
Desk	1	Steno, size 34 inches by 48 inches
Chair	2	Swivel
Chair	4	Side
Chair	1	Typist, posture
Filing Cases	1	Metal 5 drawer legal size, 27 inches deep, baked-on enamel finish
Book Cases	1	5 shelves, 10 inches deep, 48 inches wide

Table 01 52 10A - Field Office Furniture Requirements

Item	Number Required	Description
Reference Tables	1	Tables of 2 by 4 open framework and a durable pressed board top surface or commercial equivalent. Table height 36 inches, depth 44 inches, and lengths 96 inches

B. Shades: Standard fabric roller shades or metal slat venetian blinds at windows.

2.04 SIGN

A. 18-inch by 4- foot by 1/4-inch exterior plywood sign with frame.

B. Paint exposed surfaces of sign, supports, and framing.

C. Paint lettering as directed by COR.

2.05 PORTABLE TOILET FACILITIES

A. Separate portable toilets for men and women.

B. Self-Contained Toilet Units:

1. Single-occupant units.
2. Chemical, aerated recirculation, or combustion type.
3. Vented.
4. Fully enclosed with a glass-fiber-reinforced polyester shell or similar nonabsorbent material.

2.06 PARKING AREA

A. Parking area: Gravel surfaced for not less than 8 vehicles

B. Walkway from parking area to office facility: Gravel surfaced.

PART 3 EXECUTION

3.01 PREPARATION

A. Grade field office site for drainage.

3.02 INSTALLATION

A. Install or construct field office at location approved by COR.

B. Connect electricity, telephone, internet, and other required services:

1. Adequately size and correctly placed to perform without damage or interruption of service.

C. Locate toilet facilities within 20 feet of office facility.

D. Locate parking area within 10 feet of office facility.

E. Install sign at location directed by COR. Install sign surface plumb and level. Anchor sign securely.

3.03 MAINTENANCE

A. Provide maintenance and janitorial services required for field office during contract period or until removal of field office is approved by COR:

1. Includes payment for electrical, telephone, gas, water, and sanitary services.
2. Clean field office weekly.
3. Wash windows monthly.
4. Clean and service portable toilets weekly.
5. Keep approach walks free of mud, water, and snow.

3.04 REMOVAL AND CLEANUP

A. Promptly remove complete field office including buildings, foundations, utility services, and debris upon written notice from COR.

B. Disconnect and cap or remove utility services as appropriate and leave area free of any undesirable features resulting from utility service installation.

C. Restore areas: Comply with Section 01 14 10 – Use of Site.

END OF SECTION

This page intentionally left blank.

SECTION 01 55 00
VEHICULAR ACCESS AND PARKING

PART 1 GENERAL

1.01 MEASUREMENT AND PAYMENT

A. Cost:

1. Include in prices offered in the Price Schedule for other items of work.

1.02 REGULATORY REQUIREMENTS

A. Meet requirements established by jurisdictional authority for use of existing roadways and haul routes; including seasonal or other limitations or restrictions, payment of excess size and weight fees, and posting of bonds conditioned upon repair of damage.

B. Comply with applicable regulations for haul routes over public highways, roads, or bridges.

1.03 SUBMITTALS

A. Submit the following in accordance with Section 01 33 00 – Submittals.

B. RSN 01 55 00-1, Initial Digital Recording:

1. Include: Roads, driveways, corrals, cattle guards, fences, and other areas as directed by OGR.

C. RSN 01 55 00-2, Post Construction Digital Recording.

1.04 SITE CONDITIONS

A. Rights-of-way for access to work from existing roads will be established by Government:

1. In accordance with clause at FAR 52.236-10, Operations and Storage Areas, use only established roadways, parking areas, and haul routes; or temporary roadways, parking areas, or haul routes constructed by Contractor when and as authorized by CO.

2. Subject to clause at FAR 52.249-10, Default (Fixed-Price Construction), unavailability of transportation facilities or limitations thereon shall not become a basis for claims for damages or extension of time for completion of work.

PART 2 PRODUCTS

2.01 MATERIALS

A. Materials to maintain and repair existing roadways, parking areas, and haul routes: In accordance with requirements of jurisdictional authority.

B. Materials to construct, maintain, and repair temporary roadways, parking areas, and haul routes: As approved by OGR.

C. Materials to maintain roadways and parking areas constructed under this contract and used by Contractor for construction work: In accordance with specified requirements for construction of those roadways and parking areas.

PART 3 EXECUTION

3.01 EXAMINATION

A. Investigate condition of available public or private roads for clearances, restrictions, bridge-load limits, bond requirements, and other limitations that affect or may affect access and transportation operations to and from jobsite.

B. Refer to 01 57 90 – Preservation of Historical and Archeological Data if cultural resources are discovered or if Contractor needs to make improvements outside of Construction ROW.

3.02 RECORDS

A. Contact Reach Coordinator: to arrange with road owners for crossings, phone: TBD, email: TBD.

B. Make pre and post construction digital recordings of listed in 51 00 20 – Property Owner Contact Information:

1. DVD or Government approved electronic device with a minimum 720p resolution.
2. Label:
   a. Contract number and title.
   b. Contractor's name.
   c. Date recording is made.
   d. Preface video with this information.

C. OGR will be present during recording. Notify OGR at least 3-days prior to recording.

3.03 ESTABLISHED ROADWAYS AND PARKING AREAS

A. Established roadways and parking areas are available for Contractor's use subject to existing restrictions and approval of COR.

3.04 TEMPORARY ROADWAYS AND PARKING AREAS

A. Roadways:

1. Construct temporary all-weather surfaced roadways for access from public thoroughfares to serve construction area, of a width and load-bearing capacity to provide unimpeded traffic for construction purposes.
2. Construct temporary bridges or culverts at stream crossings or cross-drainage channels to allow for unimpeded surface drainage.

B. Parking Areas:

1. Construct temporary parking areas to accommodate use of construction personnel.
2. Provide additional offsite parking when site space is not adequate.
3. Locate as indicated on drawings.

3.05 HAUL ROUTES

A. Perform work on rights-of-way established by Government to construct and maintain roads, bridges, or drainage structures required for establishment and use of haul routes for construction operations.

B. Use existing available public highways, roads, or bridges as haul routes subject to applicable local regulations.

C. Minimize interference with or congestion of local traffic.

D. Furnish barricades, flaggers, and other necessary precautions for safety of public where haul routes cross public highways or roads.

E. Detours: In accordance with Section 01 55 20 – Traffic Control.

3.06 MAINTENANCE

A. Maintain roadways, parking areas, and haul routes in a sound, smooth condition.

B. Maintain surfacing of gravel surfaced roads and parking areas until completion and acceptance of work under this contract. As approved by OGR, defer until latest practicable date within specified completion period, placement of surfacing on roads or parking areas subject to heavy and deteriorating use by Contractor's construction operations or equipment.

C. Maintain surfacing of gravel-surfaced roads and parking areas in a smooth condition until completion and acceptance of work under this contract.

D. Snow removal for convenience of Contractor or to facilitate work operations of Contractor is considered to be normal required maintenance.

3.07 REPAIR

A. Promptly repair ruts, broken pavement, potholes, low areas with standing water, and other deficiencies to maintain road surfacing and drainage in original or specified condition.

B. Notify contacts below prior to making improvements:

1. New Mexico 811
   1021 Eubank Blvd NE
   Albuquerque, NM 87112
   www.nmonecall.org
   Statewide: Dial 811 or 800-321-ALERT (2537) during regular business hours
   By Fax: (505)260-1248 or (800)727-8809 24-Hours a day
   By Web: Request a Line Spot 24 Hours a day
2. Navajo Tribal Utility Authority (NTUA)
   P.O. Box 170
   Fort Defiance, AZ 86504
   Telephone: 928-729-5721
   (Navajo Tribal Utility Authority (NTUA) is not part of New Mexico One Call)

3.08 REMOVAL

A. Remove materials used to construct temporary roadways, parking areas, and haul routes prior to contract completion. Recycle salvageable materials as approved by OGR.

END OF SECTION

SECTION 01 55 20
TRAFFIC CONTROL

PART 1 GENERAL

1.01 MEASUREMENT AND PAYMENT

A. Cost:

1. Include cost of Traffic Control Management in prices offered in the Price Schedule for other items of work, except for watering for dust abatement.

1.02 REFERENCE STANDARDS

A. Federal Highway Administration, Department of Transportation:

1.	MUTCD, Part 6	Part 6, Temporary Traffic Control, Manual on Uniform Traffic Control Devices, 2009 Edition with Revisions 1 and 2: www.mutcd.fhwa.dot.gov/kno_2009rlr.htm

B. New Mexico Department of Transportation (NMDOT)

1.	NMDOT Std Spec-2019	Available at: http://dot.state.nm.us/content/dam/nmdot/Plans_Specs_Estimates/2019_Specs.pdf
2.	NMDOT Std Drawings-2019	Available at: http://dot.state.nm.us/content/dam/nmdot/Plans_Specs_Estimates/2019_Standard_Drawings.pdf
3.	Signing and Striping Manual	Available at: http://dot.state.nm.us/content/dam/nmdot/Infrastructure/SignandStriping Manual.pdf
4.	NMDOT District 6	Work Permit Application Checklist Permit application can be obtained at: http://dot.state.nm.us/content/dam/nmdot/Infrastructure/ROW_Permits/Traffic_Control-Roadway_WorkPermit.pdf

C. San Juan County Highway Department Public Works | San Juan County, NM

1.03 GENERAL

A. Contractor shall submit Traffic Control Plan to New Mexico Department of Transportation (NMDOT) to obtain required permit(s) to conduct operations along Highway 264 for daily operations of construction.

B. Permit application can be obtained at: http://dot.state.nm.us/content/dam/nmdot/Infrastructure/ROW_Permits/Traffic_Control-Roadway_WorkPermit.pdf

C. Fence Adjustments/Repair: See Specification Section 01 56 20 – Existing Fences for guidance along NMDOT 264 and BIA Road fence line as well as other locations where alignment will cross fence.

1.04 SUBMITTALS

A. Submit the following in accordance with Section 01 33 00 – Submittals.

B. RSN 01 55 20-1, Information of Traffic Control Plan (TCP).

C. RSN 01 55 20-2, Approved NMDOT Permit(s):

1. Temporary Access Control Permit Request.

1.05 PROJECT CONDITIONS

A. Project includes crossings of BIA Routes listed in Table 01 55 20A – BIA Route Crossings. Applicable signage must be maintained during construction.

Table 01 55 20A – BIA Route Crossings

Reach	Station	Drawing No.	Road Name

B. 55 22B – NDOT Jurisdictional Road Crossings. Applicable signage must be maintained during construction.

Table 01 55 20B – NDOT Jurisdictional Road Crossings

Reach	Station	Drawing No.	Road Name

1.06 QUALIFICATIONS

A. Traffic Control Plan must be done by an Engineer registered in the State of New Mexico.

B. NMDOT Permit will require current Traffic Control Supervisor Certification from Contractor.

PART 2 PRODUCTS

2.01 CONCRETE WALL BARRIER TERMINAL SECTIONS

A. Impact Attenuators:

1. Selected from NMDOT approved product list; available at: http://dot.state.nm.us/content/dam/nmdot/APL/APL.pdf

PART 3 EXECUTION

3.01 GENERAL

A. Obtain permits from San Juan County. San Juan County Road Information:

1. Contact:

a. Mailing Address:

Navajo Regional Office
Bureau of Indian Affairs
P.O. Box 1060
Gallup, NM 87305

b. Physical Address:

301 West Hill Street
Gallup, NM 87301
Telephone: 505-863-8314
Fax: 505-863-8324
www.bia.gov

B. Navajo Department of Transportation:

1. Contact:

a. Mailing Address:

Navajo Department of Transportation
P.O. Box 4620
Window Rock, AZ 86515

b. Physical Address:

#16 Old Coalmine Road
Mentmore, NM 87319
Telephone: 505-371-8300
FAX: 505-371-8399
www.navajodot.org/roads

C. Road Closures:

1. Keep public roads open.
2. Private roads: Per written agreement with owner.

3.02 TRAFFIC CONTROL

A. Additional requirements apply when performing work within NMDOT and NDOT ROWs:

1. Traffic control must be in place during construction activities.
2. Approved permit(s) from applicable DOT are required.
3. Notify applicable DOT in writing prior to date of starting proposed installation and upon completion. All installations are subject to inspection by applicable DOT forces.

B. Meet requirements of MUTCD, Part 6 RSHS and Jurisdictional Authorities.

C. Provide cones, delineators, concrete safety barriers, barricades, flasher lights, danger signals, signs, and other temporary traffic control devices as required to protect work and public safety.

D. Provide flaggers and guards as required to prevent accidents and damage or injury to passing traffic.

E. Do not begin work along public or private roads until proper traffic control devices for warning, channeling, and protecting motorists are in place in accordance with approved traffic control plan.

F. Maintain traffic flow and conduct construction operations to minimize obstruction and inconvenience to public traffic.

G. Provide unobstructed, smooth, and dustless passageway for 1 lane of traffic through construction operations.

H. Maintain convenient access to driveways, houses, and buildings along line of work.

I. Protect roads closed to traffic with effective barricades and warning signs. Illuminate barricades and obstructions from sunset to sunrise.

J. Remove traffic control devices when no longer needed.

3.03 DETOUR

A. Construct and maintain detour to provide safe, continuous traffic flow during construction.

B. Limit detour use to 3 consecutive days without prior OGR approval or as required by permits.

C. Obtain earth materials for detour embankments from required excavation or designated borrow sources. Construct stable compacted embankments.

D. Provide culverts and ditches as required to maintain surface drainage at detour.

E. Provide compacted gravel surfacing on detour.

F. Provide traffic control devices as required by MUTCD, Part 6.

G. Maintain detour in smooth, dust-free condition.

H. Remove the detour when no longer needed.

3.04 CONCRETE WALL BARRIER (CWB)

A. Install CWB in accordance with NMDOT Detail 606-20(1-5), at locations as shown in Table 01 55 20D – Concrete Wall Barrier Locations, and as directed by OGR.

Table 01 55 20D – Concrete Wall Barrier Locations

Reach	Begin CWB Placement Station	End CWB Placement Station	Drawing No.

B. Install Impact Attenuators where required.

C. Signage is required to alert drivers of shoulder work in accordance with NMDOT Standard Detail 702-10 (1-3).

3.05 ENCROACHMENT ZONES

A. Encroachment zones are locations where line pipe ROW encroaches into NMDOT ROW as shown in Table 01 55 20C – Highway 264 Encroachment Zones.

B. Within encroachment zones:

1. Compact backfill to 95 percent.

2. Reseed in accordance with 32 92 20 –Seeding and Soil Amendment.

END OF SECTION

SECTION 01 56 10
PROTECTION OF EXISTING INSTALLATIONS

PART 1 GENERAL

1.01 MEASUREMENT AND PAYMENT

A. Cost:

1. Include in prices offered in the Price Schedule for other items of work.
2. Costs for repair of installations damaged by Contractor's operations are Contractor's responsibility.

1.02 SUBMITTALS

A. Submit the following in accordance with Section 01 33 00 – Submittals:

B. RSN 01 56 10-1, Plan for Protecting Existing Installations.

1.03 PROJECT CONDITIONS

A. Drawings included in these specifications show items of existing materials and equipment but may not show all equipment and materials existing at the jobsite.

B. Obtain location of embedded conduit, pipe, cable, ground mat, and other buried items before drilling or cutting concrete.

PART 2 PRODUCTS

Not Used

PART 3 EXECUTION

3.01 PROTECTION

A. Protect personnel and existing facilities from harm due to Contractor's operations. Protection will be subject to approval of Government.

B. Arrange protective installations to permit operation of existing equipment and facilities by Government while work is in progress.

3.02 REMOVAL OF PROTECTIVE INSTALLATIONS

A. Remove protective installations after purpose has been served. Materials furnished by Contractor to provide protection remain property of Contractor.

3.03 REPAIR

A. Repair, at Contractor's expense, damage to existing installations due to Contractor's operations or Contractor's failure to provide proper protection. At Government's option, damage may be repaired by Government, and Contractor will be back charged repair costs.

END OF SECTION

SECTION 01 56 15
PROTECTION OF EXISTING UTILITIES

PART 1 GENERAL

1.01 MEASUREMENT AND PAYMENT

A. Field Investigation for Existing Utilities:

1. Payment: Lump sum price offered in the Price Schedule.

1.02 REFERENCE STANDARDS

A. Bureau of Reclamation (Reclamation)

1. RSHS — Reclamation Safety and Health Standards, including revisions posted at: https://www.usbr.gov/safety/rshs/index.html

B. Institute of Electrical and Electronics Engineers (IEEE)

1. IEEE C2-12 — National Electrical Safety Code (NESC)

1.03 SUBMITTALS

A. Submit the following in accordance with Section 01 33 00 – Submittals.

B. RSN 01 56 15-1, Utility Owner Acknowledgment:

1. Copy of notification acknowledgement to string conductors, overhead ground lines and utility companies.

C. RSN 01 56 15-2, Utility Investigation.

1.04 PROJECT CONDITIONS

A. Drawings included in these specifications show existing utilities but may not show all utilities existing at the jobsite.

B. Obtain location of buried conduit, pipe, cable, ground mat, and other buried items before excavating.

C. Unknown existing utility lines may cross pipeline alignment.

D. Government does not represent that location of known existing utilities shown on drawings are exact. Determine actual location of and make provision for known and unknown utilities:

1. Verify locations, depths and clearances of both above and below ground utilities prior to excavation.

E. Ensure that each utility line is in service as required by each utility owner.

F. Coordinate work within existing pipeline and transmission line Rights-of-Way with owners and be responsible for costs associated with crossings.

PART 2 PRODUCTS

Not Used

PART 3 EXECUTION

3.01 GENERAL

A. Have New Mexico One Call 811 locate utilities before doing underground work.

B. Navajo Tribal Utility Authority (NTUA) is not part of New Mexico One Call:

1. Have NTUA locate utilities before doing underground work. Contact Information:

   Navajo Tribal Utility Authority
   P.O. Box 170
   Fort Defiance, AZ 86504
   Telephone: 928-729-5721

C. Utility Crossing Investigation:

1. At areas where installation of line pipe is located under high voltage electrical lines, maintain distances between equipment and energized line of at least 20 feet. If distance of at least 20-feet is not possible, notify Grantor and request electrical line be de-energized.

   a. Verify clearances with Jemez Electric Co-op and other effected utilities.

2. Determine location, elevations, diameters, and materials of each underground utility line by hydro-excavation or vacuum excavation or as approved by utility owners. Test pits may be used when approved by OGR:

   a. Submit to COR before beginning preparation of pipelaying diagrams required by Section 33 11 10 – Pipeline General Requirements and excavation work.

   b. COR will determine if adjustment of pipeline grade and design is required and provide Contractor with revised drawings.

3. Obtain permission from utility or gasline owner before performing physical utility crossing investigation (potholing or test pits).

D. Coordinate with each utility line owner and schedule construction to adhere to each owner's in service, allowable out of service, and crossing requirements during

construction. See Section 51 00 00 – Information Available to Offerors for crossing agreements.

E. Notify impacted property owner at least 2 working days before disturbing waterline that serves their property. Water service to property shall not be shut off for more than 8-hours.

F. No construction activities, including excavation, will be permitted within 25-feet of gaslines unless Company representatives is onsite to monitor all construction activities.

G. Protect and support existing utilities that intersect work area. Before commencing work, obtain approval and necessary permits from utility owners within project ROW.

H. Repair existing utilities damaged during construction as approved by COR and utility owner.

3.02 CLEARANCE

A. Obtain clearances required for construction operations: Contractor shall provide in accordance with RSHS.

B. Contractor will be responsible for all required utility owners inspection fees and related traffic control fees to construct across non-government owned ROW or facilities.

3.03 INTERFERENCE WITH OPERATION OR MAINTENANCE

A. Do not interfere with operation or maintenance service on utilities, existing on date offers are received:

1. Provide for access to utilities in a manner satisfactory to owners and operators and Government.

B. Provide required temporary structures; make necessary repairs, replacements, or similar operations; and furnish indemnity or other bonds.

END OF SECTION

This page intentionally left blank.

SECTION 01 56 20
EXISTING FENCES

PART 1 GENERAL

1.01 MEASUREMENT AND PAYMENT

A. Cost:

1. Include in prices offered in the Price Schedule for other items of work.

PART 2 PRODUCTS

2.01 MATERIALS

A. Rebuild fence with new material unless existing fence material is approved for reuse by COR.

B. Provide replacement materials of similar type.

PART 3 EXECUTION

3.01 FENCE REMOVAL

A. Remove existing fences for performance of the work, only when authorized by COR. COR will coordinate with land manager's grazing specialist to offer the opportunity for the grazing permit lessee(s) to be present when fence is cut to ensure fence is adequately braced and secured. Maintain fences, where designated, until work is completed or their removal is authorized.

3.02 TEMPORARY FENCES

A. Where fences are removed on rights-of-way, provide temporary fence protection for adjacent lands to prevent livestock and dogs from straying from or onto adjacent lands, complete with gates and cattle guards.

B. If Contractor does not provide necessary temporary fencing or protection within a reasonable time after need for fencing or protection arises, CO will cause the work to be performed and back charge Contractor for such work.

C. Remove temporary fences and protection as a part of cleanup operations prior to final acceptance of completed work.

3.03 FENCE REBUILDING

A. Where fences are removed to accommodate construction, rebuild at original locations.

B. Construct rebuilt fencing that is structurally sound and matches, or is better than, existing fencing installation.

END OF SECTION

SECTION 01 56 32
TEMPORARY SAFETY FENCE

PART 1 GENERAL

1.01 MEASUREMENT AND PAYMENT

A. Cost:

1. Include in prices offered in the Price Schedule for other items of work.

PART 2 PRODUCTS

2.01 SAFETY FENCE

A. Fence:

1. High-density polyethylene grid.
2. Minimum height: 48-inch.
3. Color: Safety orange.
4. Recovered Material Content:
   a. 90 to 100 percent.
5. Postconsumer Content:
   a. 60 to 100 percent.

B. Posts: Steel fence posts.

PART 3 EXECUTION

3.01 INSTALLATION

A. Erect fence around work areas as required in Sections 31 23 22 – Pipe Trench Earthwork.

B. Space posts 10-feet, maximum, on center.

C. Secure grid to posts.

3.02 MAINTENANCE AND REMOVAL

A. Maintain fence until work in area is complete and accepted by COR.

B. Remove fence when no longer required.

END OF SECTION

This page intentionally left blank.

SECTION 01 57 20
ENVIRONMENTAL CONTROLS

PART 1 GENERAL

1.01 MEASUREMENT AND PAYMENT

A. Cost:

1. Include in prices offered in the Price Schedule for other items of work, except as specified.
2. See Section 31 02 10 – Water for Dust Abatement, for measurement and payment for applying water used for dust abatement within the rights-of-way.

1.02 REFERENCE STANDARDS

A. Bureau of Reclamation (Reclamation)

1.	RSHS	Reclamation Safety and Health Standards, including revisions posted at: https://www.usbr.gov/safety/rshs/index.html

B. U.S. Environmental Protection Agency (USEPA)

1.	EPA CGP-17	Stormwater Discharge Permit associated with a Construction Site including revisions. www.epa.gov/npdes/epas/-2017-construction-general-permit-cgp-and-related-documents

1.03 SUBMITTALS

A. Submit the following in accordance with Section 01 33 00 – Submittals.

B. RSN 01 57 20-1, Copy of Applicable Air Quality Permit.

1.04 REGULATORY REQUIREMENTS

A. Comply with Federal, State, Tribal and local laws and regulations.

B. Comply with RSHS.

C. Conform to most stringent requirement in cases of conflict between specifications, regulatory requirements, and RSHS.

D. Contractor shall be responsible for damages resulting from dust originating from Contractor operations in accordance with clause at FAR 52.236-7, Permits and Responsibilities.

E. CO may stop construction activity in violation of Federal, State, Tribal or local laws and additional expenses resulting from work stoppage will be responsibility of Contractor.

1.05 PERMITTING

A. Develop draft environmental Permit Applications not covered in other sections and forward to COR for submission.

1.06 DUST CONTROL

A. Provide dust control and abatement during performance of work.

B. Prevent, control, and abate dust pollution on rights-of-way provided by Government or elsewhere during performance of work.

C. Provide labor, equipment, and materials, and use efficient methods to prevent dust nuisance or damage to persons, property, or activities, including, but not limited to, crops, cultivated fields, wildlife habitats, dwellings and residences, agricultural activities, recreational activities, traffic, and similar conditions.

D. Provide means for eliminating atmospheric discharges of dust during mixing, handling, and storing of cement, pozzolan, and concrete aggregate.

1.07 AIR POLLUTION CONTROL

A. Air Quality Permits are not required for control of fugitive dust generated as result of construction-related activities on a short term basis, however permits are required with specific emission sources tied to aggregate processing and batch plant operations releasing particulates to atmosphere.

B. Air Quality Permits are required for certain construction-related activities including, but not limited to, sandblasting, aggregate processing, or other processes which discharge pollutants into open air.

C. Air Quality Permits, and information concerning requirements, are available from: New Mexico Environmental Department, telephone: 505-827-2855 and USEPA.

D. Use reasonably available methods and devices to prevent, control, and otherwise minimize atmospheric emissions or discharges of air contaminants.

E. Do not operate equipment and vehicles that show excessive exhaust gas emissions until corrective repairs or adjustments reduce such emissions to acceptable levels.

1.08 NOISE CONTROL

A. Only construction activities approved by COR will be allowed between dusk and dawn.

1.09 LIGHT CONTROL

A. Shine direct stationary floodlights downward at an angle less than horizontal.

B. Shield floodlights so that floodlights will not be a nuisance to surrounding areas.

C. Direct lighting so that residences are not in direct beam of light.

D. Correct lighting control problems when they occur as approved by COR.

PART 2 PRODUCTS

Not Used

PART 3 EXECUTION

Not Used

END OF SECTION

This page intentionally left blank.

SECTION 01 57 30
WATER POLLUTION CONTROL

PART 1 GENERAL

1.01 MEASUREMENT AND PAYMENT

A. Cost:

1. Include in prices offered in the Price Schedule for other items of work.

1.02 REFERENCE STANDARDS

A. Bureau of Reclamation (Reclamation)

1.	RSHS	Reclamation Safety and Health Standards, including revisions posted at: https://www.usbr.gov/safety/rshs/index.html

B. Code of Federal Regulations (CFR)

1.	40 CFR, Part 112	Oil Pollution Prevention

C. Public Law

1.	Sections 311, 402, and 404	Clean Water Act (Public Law 92-500, as amended)

D. U.S. Environmental Protection Agency (USEPA)

1.	EPA CGP-17	Stormwater Discharge Permit associated with a Construction Site including revisions. www.epa.gov/npdes/epas-2012-construction-general-permit-cgp-and-related-documents

1.03 SUBMITTALS

A. Submit the following in accordance with Section 01 33 00 – Submittals.

B. RSN 01 57 30-1, Updated Stormwater Pollution Prevention Plan (SWPPP):

1. Include copy of permits.

C. RSN 01 57 30-2, Spill Prevention, Control, and Countermeasure (SPCC) Plan:

1. Submit to COR when SPCC Plan is required in accordance with 40 CFR, Part 112.
2. SPCC Plan is required where release of oil and oil products could reasonably be expected to enter into or upon navigable waters of the United States or adjoining

shorelines in quantities that may be harmful (40 CFR, Part 110), and aggregate on site oil storage capacity is over 1,320-gallons. Only containers with capacity of 55-gallons and greater are included in determining on site aggregate storage capacity.

3. Reviewed and certified by a registered professional engineer in accordance with 40 CFR, Part 112, as required by section 311 of the Clean Water Act (Public Law 92-500 as amended).

4. Submit spill prevention plan for oil storage equal to or greater than 1,320 gallons. Spill Prevention Plan shall be stamped by a professional engineer to Bureau of Reclamation (BOR) for formal submittal and include:

   a. Oil Storage Quantity.

   b. Drawings of containment system.

D. Response plan to spill.

1.04 REGULATORY REQUIREMENTS

A. Construction Safety Standards:

1. Comply with sanitation and potable water requirements of section 7 of RSHS and EPA CGP.

B. Laws, Regulations, and Permits:

1. Perform construction operations to comply, and ensure subcontractors comply, with:

   a. Applicable Federal, State, Tribal and local laws, orders, regulations, and Water Quality Standards concerning control and abatement of water pollution; and terms and conditions of applicable permits issued by permit issuing authority.

   b. If conflict occurs between Federal, State, Tribal and local laws, regulations, and requirements, the most stringent shall apply.

C. Contractor Violations:

1. If noncompliance should occur, verbally report noncompliance within 2-hours to CO. Submit specific written information within 24-hours including corrective actions.

2. Violation of applicable Federal, State, Tribal or local laws, orders, regulations, or Water Quality Standards may result in CO stopping site activity until compliance is ensured.

3. Contractor shall not be entitled to extension of time, claim for damage, or additional compensation by reason of such a work stoppage.

4. Corrective measures required to bring activities into compliance shall be at the Contractor's expense.

1.05 REQUIRED PERMITS

A. Wastewater Discharge Permit:

1. Permit:

   a. Prior to discharging wastewater or other pollutants, provide draft permit(s) to discharge pollutants as required under section 402 of Clean Water Act (Public Law 92-500 as amended), and New Mexico Environment Department, Surface Water Quality Bureau and Navajo Nation Environmental Protection Agency.

   b. Submit permit applications to Government, for review and Government's submittal.

   c. Government will support Contractor in obtaining permits, as deemed appropriate by Government.

2. Terms and Conditions: Comply with terms and conditions as stated in the permit.

3. Monitoring and Treatment:

   a. Provide monitoring and water treatment to achieve compliance with permit conditions.

   b. Provide recordkeeping required of permittee, as stated in the section 402 permit.

4. Sampling: Include sampling in monitoring required of Contractor to meet Section 402 requirements, as well as required laboratory tests to determine effluent characteristics.

5. Monitoring Results:

   a. Provide monitoring results to appropriate agency as required by permit.

   b. Send copies of information transmitted to appropriate agency to COR.

B. Stormwater Discharge Permit Associated with a Construction Site (EPA Construction General Permit):

1. Stormwater Pollution Prevention Plan:

   a. Comply with terms and conditions to maintain CGP.

2. Notice of Intent (NOI):

   a. Contractor will submit a NOI via the EPA's eNOI system go to: www.epa.gov/npdes/stormwater/cgpenoi to obtain coverage under the construction general permit to control stormwater and certain regulated non-stormwater discharges associated with construction activity (including construction dewatering) as outlined in part 1 of the Final 2017 CGP as required under the provisions of the Clean Water Act, 33 U.S.C § 1251 and as amended by the Water Quality Act of 1987 (P.L. 100-4).

3. Monitoring and Water Treatment:

a. Provide monitoring and water treatment to achieve compliance with applicable Water Quality Standards and CGP.

b. Provide the recordkeeping required by the CGP associated with construction activity.

C. Stormwater Discharge Permit Associated with Industrial Activity:

1. Stormwater Discharge Permit:

a. If construction activities will entail use of a mobile CLSM plant, concrete plant, or nonmetallic borrow areas, a stormwater discharge permit associated with industrial activity may be required.

2. Notice of Intent (NOI):

a. Contractor will sign NOI to obtain coverage under a stormwater general permit to control stormwater discharges from industrial activity at the construction site as required under section 402 of Clean Water Act (Public Law 92-500, as amended) and/or New Mexico Environment Department, Surface Water Quality Bureau and/or Navajo Nation Environmental Protection Agency.

3. Terms and Conditions:

a. Comply with terms and conditions to obtain and maintain the industrial stormwater discharge permit, including the preparation of a Pollution Prevention Plan.

4. Monitoring and Water Treatment:

a. Provide monitoring and water treatment, if necessary, to achieve compliance with applicable Water Quality Standards.

b. Provide recordkeeping required by the stormwater discharge permit associated with industrial activity.

c. Provide Reclamation working copy of SWPPP at end of the contract.

D. 404 Permit and 401 Water Quality Certification:

1. Government will apply for a permit to discharge dredged or fill material into waters of the United States (including wetlands) as required under section 404 of the Clean Water Act (Public Law 92-500 as amended).

2. If a 404 permit is required, Government will also obtain a CWA 401 water quality certification from the regulatory authority having jurisdiction: NMED, NNEPA, or EPA:

a. Coordinate with Government and meet requirements of the 404 permit and 401 water quality certifications.

b. Provide documentation to support permit compliance, monitoring and close out.

1.06 CONTRACTOR RESPONSIBILITIES

A. Permits: Obtain permits in BOR and Contractor's name.

B. Monitoring:

1. Conduct monitoring in order to meet the requirements of the permits which may include:

   a. Sampling,

   b. Site inspections,

   c. Required laboratory tests to determine effluent characteristics.

C. Reporting Results:

   a. Provide monitoring results to appropriate agency as required by permit.

   b. Send copies of information transmitted to appropriate agency to COR.

D. Recordkeeping: Retain records and data for life of project or as required by permits, whichever is longer.

PART 2 PRODUCTS

Not Used

PART 3 EXECUTION

3.01 POLLUTION CONTROLS

A. Control pollutants by use of sediment and erosion controls, wastewater and stormwater management controls, construction site management practices, and other controls including Federal, Tribal State and local control requirements. As shown on approved SWPPP and as necessary to control pollutants.

B. Sediment and Erosion Controls:

1. Establish methods for controlling sediment and erosion which address vegetative practices, structural control, sediment controls, and operator controls as appropriate.

2. Institute stormwater management measures as required, including velocity dissipators, and solid waste controls which address controls for building materials and offsite tracking of sediment.

C. Wastewater and Stormwater Management Controls:

1. Pollution prevention measures:

a. Use methods of dewatering, unwatering, excavating, or stockpiling earth and rock materials which include prevention measures to control silting and loss of soil due to wind and water erosion, and which will intercept and settle runoff of sediment-ladened waters.

b. Prevent wastewater from general construction activities such as drainwater collection, aggregate processing, concrete batching, and drilling, grouting, or other construction operations, from entering flowing or dry watercourses without the use of approved turbidity control methods.

c. Divert stormwater runoff from upslope areas away from disturbed areas.

2. Turbidity Prevention Measures:

a. Use methods for prevention of excess turbidity which include, but are not restricted to, intercepting ditches, settling ponds, gravel filter entrapment dikes, recirculation, combinations thereof, or other approved methods that are not harmful to aquatic life.

b. Wastewaters discharged into surface waters shall meet conditions of permits.

c. Do not operate mechanized equipment in waterbodies without having first obtained a section 404 permit and 401 water quality certifications, and then only as necessary to construct crossings or perform the required construction.

D. Construction Site Management:

1. Contractor construction operations:

a. Perform construction activities by methods that will prevent entrance, or accidental spillage, of solid matter, contaminants, debris, or other pollutants or wastes into streams, flowing or dry watercourses, lakes, wetlands, reservoirs, or underground water sources:

1) Pollutants and wastes include, but are not restricted to: Refuse, garbage, cement, sanitary waste, industrial waste, hazardous materials, radioactive substances, oil and other petroleum products, aggregate processing tailings, mineral salts, and thermal pollution.

b. Comply with 404 permit and 401 water quality certifications.

2. Stockpiled or deposited materials:

a. Do not stockpile or deposit excavated materials or other construction materials, near or on, stream banks, lake shorelines, or other watercourse perimeters where they can be washed away by high water or storm runoff or can encroach upon the watercourse.

3. Petroleum product storage tanks management:

a. Place oil or other petroleum product storage tanks at least 100 feet from streams, flowing or dry watercourses, lakes, wetlands, reservoirs, and

other water sources. Do not place petroleum product storage tanks within a watercourse's 100-year floodplain.

b. Do not use underground storage tanks.

c. Construct storage area dikes at least 12-inches high or graded and sloped to permit safe containment of leaks and spills equal to storage tank capacity located in the area plus sufficient freeboard to contain the 25-year rainstorm.

1) Line diked areas with an impermeable barrier at least 50 mils thick.

d. Areas for refueling operations: Lined with impermeable barrier at least 50 mils thick covered with 4-inches of soil.

END OF SECTION

This page intentionally left blank.

SECTION 01 57 50
TREE AND PLANT PROTECTION

PART 1 GENERAL

1.01 MEASUREMENT AND PAYMENT

A. Cost:

1. Include in prices offered in the Price Schedule for other items of work, except as specified.
2. Costs for repair or treatment of injured vegetation and replacement of trees or shrubs are Contractor's responsibility.

1.02 SUBMITTALS

A. Submit the following in accordance with Section 01 33 00 – Submittals.

B. RSN 01 57 50-1, Protection Plan:

1. Description of protective barriers or other methods used to protect vegetation from damage or injury caused by construction operations.

PART 2 PRODUCTS

2.01 REPLACEMENT TREES AND SHRUBS

A. Species: Same as removed tree or shrub or other species approved by COR.

B. Size: Same size as removed tree or shrub, or maximum practicable size that can be planted and sustained in the particular environment as approved by COR.

PART 3 EXECUTION

3.01 PRESERVATION AND PROTECTION

A. Preserve natural landscape and preserve and protect existing vegetation not required or otherwise authorized to be removed:

1. Requests to remove vegetation not specifically required to be removed to COR.

B. Conduct operations to prevent unnecessary destruction, scarring, or defacing of natural surroundings in the vicinity of the work.

C. Move crews and equipment within the rights-of-way and over routes provided for access to the work in a manner to prevent damage to grazing land, crops, or property.

D. Protect vegetation from damage or injury caused by construction operations, personnel, or equipment by the use of protective barriers or other methods approved by COR.

E. Minimize, to the greatest extent practicable, clearings and cuts through vegetation. Irregularly shape authorized clearings and cuts to soften undesirable aesthetic impacts.

F. Do not use trees for anchorages except in emergency cases or as approved by COR:

1. For such use, wrap the trunk with a sufficient thickness of approved protective material before rope, cable, or wire is placed.

2. Submit requests to use trees for anchorage, except for emergencies. Include description of protective material.

G. Use safety ropes where tree climbing is necessary; do not use climbing spurs.

3.02 REPAIR, TREATMENT, OR REPLACEMENT

A. Contractor is responsible for injuries to vegetation caused by Contractor operations, personnel, or equipment.

B. Employ the services of an experienced arborist or licensed tree surgeon to direct repair, treatment, and replacement of injured vegetation. Submit qualifications of experienced arborist or licensed tree surgeon to COR prior to employment.

C. Repair or treat injured vegetation without delay and as recommended by and under direction of an experienced arborist or licensed tree surgeon.

D. Remove vegetation, rubbish, and objectionable material as determined by COR.

1. Where tree cutting is required, remove:

a. Tree root balls.

b. Stumps.

c. Wood: 3-inches diameter or larger:

1) Remove, limbs, and leave on roadside for local residents to collect and use as firewood.

2. Grasses, shrubs, trees/slash 3-inches diameter or less:

a. Mow with mower/brush hog.

b. Incorporate into topsoil

E. Replace removed tree or shrub with tree or shrub approved by COR:

1. Plants that are protected species require multiple plants of the same species be replaced for each plant removed. Replacements ratio/numbers in accordance with biological consultation, land ownership agreements, and revegetation plan. See Section 01 57 60 – Protected Species.

2. For a period of 1-year, guy as required, water, and maintain replacement trees and shrubs:
   a. Remove and replace replacement trees or shrubs that die within the 1 year period.
   b. Maintain such replacements for a period of 1-year from replacement date.

END OF SECTION

This page intentionally left blank.

SECTION 01 57 60
PROTECTED SPECIES

PART 1 GENERAL

1.01 MEASUREMENT AND PAYMENT

A. Cost:

1. Include in prices offered in the Price Schedule for other items of work.

1.02 PROJECT CONDITIONS

A. Certain native species in the State of New Mexico are protected plant or animal species under Tribal, State and Federal laws. Government has ascertained that:

1. Migratory Birds, and Raptors may exist in areas to be disturbed by construction activities.

B. Project is designed to comply with commitments of the Final Biological Opinion for Navajo-Gallup Water Supply Project as issued by U.S. Fish and Wildlife Service on February 26, 2009, as well as the NEPA Sufficiency Report Reaches 12.1 and 12.2, issued in August 2014.

C. Migratory Birds:

1. Government will survey vegetated areas to be disturbed for nesting migratory birds:
2. Do not disturb birds' active nests:
3. Notify COR 7-days before disturbing an area.
   a. Migratory bird nest surveys will be required if vegetation or tree clearing activities associated with the project occur within migratory bird nesting season of March 1-August 31:
      1) Nest surveys will be conducted by Reclamation approved individual(s) using approved survey protocol and will be conducted a maximum of 1-week before scheduled vegetation removal.
      2) If nests are found, the appropriate species buffer will be applied to the nest with no disturbance allowed in the buffer zone until approved by a Reclamation biologist.
      3) Nest monitoring (using approved methods) may be required to determine nesting status.

D. Raptors:

1. Government will conduct surveys immediately prior to construction within construction right-of-way and buffer zone for nesting raptors:

   a. Minimize disturbance to raptors.

   b. Government will conduct raptor surveys immediately prior to construction between January 15th and July 15th.

2. Notify COR 7-days prior to construction to allow for raptor nest surveys.

3. Do not disturb an active raptor nest:

   a. Government will notify Contractor of nest locations.

   b. No construction will be allowed within the above months within 1/4-mile of active nests.

E. Insert this section in subcontracts which involve performance of work in areas where protected species may occur.

F. In accordance with Federal, Tribal and State law, Government may arrange for removal of protected species, and Contractor shall cooperate with those performing such removal. If these species are not removed, cooperate with and abide by protection plans developed by appropriate Federal or State entities to avoid damage to or disturbance of protected species.

1.03 REPLACEMENT PLANTS

A. Protected plant species shall not be removed or damaged by Contractor:

1. If inadvertent effects occur to protected species during construction:

   a. Notify Government:

      1) Verbal: Within 2-hours.

      2) Written: Within 24-hours.

   b. Cease work in affected work area until consultation commitments are completed.

2. Government, in consultation with Land Manager and State of New Mexico, will manage required removal/replacement planting in accordance with consultation commitments.

3. Replacement numbers/ratio in accordance with consultation commitments.

PART 2 PRODUCTS

Not Used

PART 3 EXECUTION

Not Used

END OF SECTION

This page intentionally left blank.

SECTION 01 57 90

PRESERVATION OF HISTORICAL AND ARCHEOLOGICAL DATA

PART 1 GENERAL

1.01 MEASUREMENT AND PAYMENT

A. Cost:

1. Except as provided for an equitable adjustment, include in prices offered in the Price Schedule for other items of work.

1.02 DEFINITIONS

A. Cultural Resources: Includes prehistoric, historic, architectural, and traditional cultural properties. These include, but are not limited to, human skeletal remains, archaeological artifacts, records, and material remains related to such property.

B. Cultural Items: Native American cultural items (i.e., funerary objects, sacred objects, objects of cultural patrimony, or human remains) for which protection is prescribed under the Native American Graves Protection and Repatriation Act (NAGPRA) - Public Law 101-601; 104 Stat. 3042, Section 3(d); and 43 CFR Part 10.4.

C. Human Remains: Physical remains of the body of a person.

D. Funerary Objects: Native American items that, as part of the death rite or ceremony of a culture, are reasonably believed to have been placed intentionally at the time of death or later with or near individual human remains.

E. Native American: Of, or relating to, a tribe, people, or culture that is indigenous to the United States.

F. Sacred Objects: Native American items that are specific ceremonial objects needed by traditional Native American religious leaders for the practice of traditional Native American religions by their present-day adherents. These items are specifically limited to objects that were devoted to a traditional Native American religious ceremony or ritual and which have religious significance or function in the continued observance or renewal of such ceremony.

G. Objects of Cultural Patrimony: Native American items having ongoing historical, traditional, or cultural importance central to the Indian tribe itself, rather than property owned by an individual tribal member. These objects are of such central importance that they may not be alienated, appropriated, or conveyed by any individual tribal member.

1.03 SUBMITTALS

A. Submit the following in accordance with Section 01 33 00 – Submittals.

B. RSN 01 57 90-1, Alternate Use Area or Borrow Area:

1. When use area or borrow area other than those approved is to be used, submit map showing location of unapproved use or borrow areas, for approval.

1.04 PROJECT CONDITIONS

A. Project site has been surveyed for construction within ROW by agencies having jurisdiction: Navajo Nation Historical Preservation Department (NNHPD), State Historical Preservation Office (SHPO) and Bureau of Indian Affairs (BIA).

B. Government will retain an Archeologist to monitor ground disturbing activity work within 50-foot of identified sites:

1. Coordinate work at minimum weekly with OGR and Government Archeologist.

C. Onsite Contractor personnel shall undergo cultural resource awareness training to inform onsite personnel of cultural resource requirements during cultural sensitivity and pre-construction before initial groundbreaking takes place:

1. Government will provide training:

a. Training will take approximately 1-hour.

b. Schedule for training will be mutually agreed upon.

c. CD and/or PowerPoint of Cultural Sensitivity Training will be provided to Contractor.

2. Contractor shall:

a. Require onsite personnel added after completion of cultural awareness training to view Cultural Sensitivity Training before being allowed to work in project area.

b. Maintain training records.

D. Federal legislation provides for protection, preservation, and collection of scientific, prehistorical, historical, and archeological data, including relics and specimens, which might otherwise be lost due to alteration of terrain as a result of any Federal construction project.

E. Persons who, without permission, injure, destroy, excavate, appropriate, or remove historical or prehistorical artifact**s**, object**s** of antiquity, or archeological resource**s** on private, State and Tribal lands of the United States are subject to arrest and penalty of United States, Navajo Nation, and New Mexico Cultural Resource Protection laws. Offenders will be subject to Navajo Nation and New Mexico Cultural Resource Protection laws.

F. Comply with Federal, State and Tribal laws when operating on non-Federal and non-Indian lands.

G. Attend weekly coordination meetings. Refer to Section 01 31 19 – Project Management and Coordination.

H. Discovery of Resources

1. When Contractor or parties operating or associated with Contractor, in performance of this contract discover cultural resources on ROW:

   a. Immediately cease work within 50-feet of the discovery location:

      1) Place temporary safety fence in accordance with 01 56 32 – Temporary Safety Fence to prevent disturbance until archaeologist can investigate to avoid inadvertent disturbance by construction activities.

   b. Verbally notify CO and OGR within 2-hours, giving location and nature of findings.

   c. Verbally notify Reclamation staff archaeologist within ~~2~~ 2-hours. Name of staff archaeologist and telephone number will be provided at pre-construction meeting.

   d. Follow with written confirmation to CO within 12-hours.

2. Do not disturb or damage cultural resources uncovered during construction activities. Provide cooperation and assistance to preserve findings for removal or other disposition by CO.

3. Upon completion of concurred discovery treatment by Cultural Contractor, a 48-hour consultation period will be conducted:

   a. When discovery mitigation has been completed CO will be notified that work can resume by Cultural Contractor and OGR will notify Contractor work can resume in discovery area.

4. Do not resume work in area of discovery until receipt of written notice to proceed from CO.

I. Where appropriate by reason of discovery, CO may order delays in time of performance or changes in work, or both. When such delays or changes are ordered, an equitable adjustment will be made in the contract in accordance with applicable clauses of the contract.

J. Mitigate cultural resources as directed by Government on lands outside of Permanent or Construction ROW, including private lands:

1. Comply with cultural resource stipulations as shown on drawings.

2. Obtain Government clearance before disturbing lands outside of ROW in accordance with Section 01 14 10 – Use of Site.

PART 2 PRODUCTS

Not Used

PART 3 EXECUTION

3.01 CULTURAL MONITORING AREA

A. 48-hour notice must be provided to COR, Government Archeologist and Cultural Contractor prior to approaching or entering a cultural monitoring area for construction activities.

B. An archeological monitor is required for all construction activities within identified monitoring areas. All construction activities in monitoring areas will require an archeological monitor for all construction activities at all times.

END OF SECTION

SECTION 01 60 00
PRODUCT REQUIREMENTS

PART 1 GENERAL

1.01 MEASUREMENT AND PAYMENT

A. Cost:

1. When the Price Schedule includes a separate item for furnishing a material, include cost of furnishing, hauling, storing, and handling in the prices offered in the Price Schedule for the item.
2. When the Price Schedule do not include a separate item for furnishing a material, include cost of furnishing, hauling, storing, and handling in the prices offered in the Price Schedule for work for which the material is required.

1.02 DEFINITIONS

A. Essential Characteristics: As used in these specifications, the term "essential characteristics" is synonymous with the term "salient characteristics."

B. Salient Characteristics: Those qualities of an item that are essential to ensure that the intended use of the item can be satisfactorily realized.

1.03 REFERENCE STANDARDS

A. American Society of Mechanical Engineers (ASME)

1.	ASME B1.1-03(2008)	Unified Inch Screw Threads, (UN and UNR Thread Form)
2.	ASME B1.20.1-13	Pipe Threads, General Purpose, Inch

B. Bureau of Reclamation (Reclamation)

1.	RSHS	Reclamation Safety and Health Standards, including revisions posted at: https://www.usbr.gov/safety/rshs/index.html

1.04 DELIVERY, STORAGE, AND HANDLING

A. Transport and handle manufactured products in accordance with manufacturer's instructions.

B. Store and protect manufactured products in accordance with manufacturer's instructions and RSHS. Obtain instructions from the manufacturer before delivery of materials to jobsite. Maintain a copy of instructions at jobsite.

C. Protect materials from adverse effects of moisture, sunlight, ultraviolet light, or weather during storage at jobsite.

D. Remove and replace damaged items with new items.

E. Store curing compounds, sealants, adhesives, paints, coatings, sealers, joint compounds, grouts, and similar products at the temperature and environmental conditions recommended by manufacturer.

1.05 MAINTENANCE

A. Extra Materials:

1. Furnish additional maintenance materials specified as "extra materials" in the specifications. Provide maintenance material identical to installed material and provide from the same manufacturer's production lot as installed material.
2. Package extra materials for storage and label with complete product identification on packaging.
3. Deliver extra materials to Government at jobsite and place in storage as directed by COR.

PART 2 PRODUCTS

2.01 MATERIALS

A. Provide materials required for completion of work.

B. Provide type and quality described in these specifications. Make diligent effort to procure specified materials from available sources.

C. Furnish new materials conforming to referenced standards unless otherwise specified.

D. For materials not covered by these or referenced specifications, furnish materials of standard commercial quality.

E. If materials to be used deviate from or are not covered by recognized specifications and standards, submit, for approval, justification for and exact nature of the deviation, and complete specifications for materials proposed for use.

F. Make parts accurately to standard gauge where possible:

1. Use unified screw threads conforming to ASME B1.1 or ASME B1.20.1 for threads, including but not limited to those of bolts, nuts, screws, taps, pipes, and pipefittings.
2. For internal connections only, Contractor may deviate from ASME standards, provided a complete set of taps and dies are furnished as required to facilitate repair or replacement.

G. Permanently mark fasteners with a symbol identifying the manufacturer and with symbol(s) indicating grade, class, type, and other identifying marks in accordance with reference or applicable standard.

2.02 SUBSTITUTIONS

A. If materials required by these specifications become unavailable, because of Government priorities or other causes, substitute materials may be used.

B. Obtain written approval to use substitute materials from CO. State in the request for approval the amount of the adjustment, if any, to be made in favor of Government.

C. Government's determination as to whether substitution will be permitted and as to what substitute materials may be used, shall be final and conclusive.

D. If approved substitute materials are of less value to Government or involve less cost to Contractor than specified material, a contract adjustment will be made in favor of Government. Where the amount involved or the importance of substitution warrants, a deductive modification to the contract will be issued.

E. No payments in excess of prices offered in the Price Schedule will be made because of substitution of one material for another or because of use of one alternate material in place of another.

2.03 WORKMANSHIP

A. Accurately manufacture and fabricate materials in accordance with best modern practice and requirements of these specifications, notwithstanding minor errors or omissions therein.

B. Use liberal factors of safety and adequate shock-absorbing features in designs, especially for parts subjected to variable stress or shock, including alternating or vibrating stress or shock.

C. Include provisions which prevent components from loosening for shock-absorbing features and parts subject to vibration.

2.04 GOVERNMENT CONTRACT SOURCE QUALITY ASSURANCE

A. Materials will be subject to inspection in accordance with clause at FAR52.246-12 “Inspection of Construction” at following locations, as determined by CO at:

1. Place of production or manufacture.
2. Shipping point.
3. Jobsite.

B. To allow sufficient time to provide for inspection, submit at time of issuance, copies of purchase orders, including drawings and other pertinent information, covering material

on which inspection will be made as advised by CO, or submit other evidence if such purchase orders are issued verbally or by letter.

C. Inspection of materials at locations specified above or waiving of inspection shall not be construed as being conclusive as to whether materials and equipment conform to contract requirements under the clause at FAR 52.246-12 "Inspection of Construction", nor shall Contractor be relieved thereby of the responsibility for furnishing materials meeting the requirements of these specifications.

D. Acceptance of materials will be made only at the jobsite.

PART 3 EXECUTION

3.01 INSTALLATION

A. Install products in accordance with manufacturer's recommendations unless otherwise specified.

3.02 GOVERNMENT CONTRACT FIELD QUALITY ASSURANCE

A. Final inspection and acceptance of materials will be made only at the jobsite after installation and testing.

END OF SECTION

SECTION 01 71 20
SURVEYING

PART 1 GENERAL

1.01 MEASUREMENT AND PAYMENT

A. Cost:

1. Include in prices offered in the Price Schedule for other items of work.

1.02 DEFINITIONS

A. GPS: Global Positioning System.

B. GNSS: Global Navigation Satellite Systems.

C. TPS: Terrestrial Positioning Systems such as total stations and automatic levels.

1.03 SUBMITTALS

A. Submit the following in accordance with Section 01 33 00 – Submittals.

B. RSN 01 71 20-1, Surveying Plan:

1. Describe work layout and survey methods.
2. Surveying schedule.

C. RSN 01 71 20-2, Resume:

1. Proof of Registration as a licensed surveyor or engineer in New Mexico.

D. RSN 01 71 20-3, Accuracy Check Results:

1. Accuracy check of Government-established primary control.

E. RSN 01 71 20-4, Completed and Reduced Survey Notes:

1. Copy of completed and reduced survey notes (electronic or paper) for a survey or portion of survey. Include ASCII coordinate files.

F. RSN 01 71 20-5, Original Field Survey Books.

G. RSN 01 71 20-6, Quantity Survey Notes and Computations:

1. Copies required for progress payment. Include itemized statement for work covered by notes and computations.

H. RSN 01 71 20-7, Workday's Survey Notes:

1. Copies when requested by the Government.

1.04 PRIMARY CONTROL

A. Government has established primary control to be used for establishing work lines and grades.

B. Primary control consists of bench marks and horizontal control points in work vicinity.

C. Government will provide complete listing and identification of primary control within 15-days after issuance of Notice to Proceed.

D. Check and verify primary control and resolve discrepancies with Government before beginning work.

E. Preserve and maintain primary control points until otherwise authorized. Government may reestablish damaged or destroyed primary control points and backcharge reestablishment cost to Contractor.

1.05 QUALIFICATIONS

A. Surveyors: Experienced construction surveyors under supervision and direction of Professional Engineer (PE) or licensed Professional Land Surveyor (PLS) minimum of 5-years' experience in charge of construction surveys for construction similar in nature to that required by this contract.

PART 2 PRODUCTS

2.01 SURVEYING MATERIALS AND EQUIPMENT

A. Provide materials required for surveying work, including, but not limited to, stakes, spikes, steel pins, templates, platforms, and tools.

B. Except as required to be incorporated in work or left in place, surveying materials remain property of Contractor.

C. Type and brand of surveying equipment including, serial numbers~~,~~ (GNSS Systems, Total Stations, and Data Collectors) to be used onsite.

PART 3 EXECUTION

3.01 GENERAL

A. Surveyor shall be on site during construction activities to provide control of work:

1. Surveyor shall be required for each pipe crew if multiple crews are utilized unless waived by CO.
2. Contracted surveyor will use FCCO Survey Group code list for entire ~~during the~~ duration of the project. The Survey Chief of the FCCO office will provide the code list to the contracted surveyor.

B. Cultural Resources:

1. Obtain COR approval before entering site with a vehicle.
2. Refer to Section 01 57 90 – Preservation of Historical and Archeological Data if cultural resources are encountered.

3.02 LAYOUT OF WORK SURVEYS

A. Establish lines and grades for work layout from Government-established primary control points.

B. Establish measurements required for work execution to specified tolerances.

C. Provide stakes, markers, and other survey controls necessary to control, check, and guide construction. Place and mark controls so COR can monitor progress without the use of survey equipment.

D. All work shall be performed using North American Datum 1983 (NAD 83) State Plane New Mexico West Feet (EPSG 2259).

E. All work shall be performed using North American Vertical Datum of 1988 (NAVD 88) in vertical units of U.S. Survey Feet.

F. All georeferencing shall employ Geoid 09 (GEOID09).

G. All ground-to-grid conversions, where necessary, will be performed utilizing site calibration factors (k-factors for combined horizontal and vertical scaling) supplied to Contractor by FCCO Survey Chief. Independent site calibration factors will be provided for each reach (designated as Reach 12.1 or Reach 12.2) and also appear on Construction Plan and Profile drawings.

H. As-Built data shall be collected in coordinate format to remain in and be delivered in State Plane coordinates (NAD 83, NAVD 88).

3.03 QUANTITY SURVEYS

A. Perform surveys and computations to determine quantities of work performed or placed during each progress payment period.

B. Perform surveys necessary for Government to determine final quantities of work in place. Final payment quantities will be based on Government's original terrain data and submitted survey notes and computations.

C. Perform quantity surveys in presence of authorized Government representative, unless specifically waived. Notify Government at least 24-hours before performing a quantity survey.

3.04 SURVEY REQUIREMENTS

A. Alignment and ROW Staking: Each 50-feet on tangent and each 25 feet on curves.

B. Slope Staking: Each 50 feet on tangent and each 25 feet on curves, stake every 10 feet in elevation on slopes.

C. Structures: Stake out of structures and checkouts before and during construction.

D. Roads: Blue tops each 50 feet on tangent and each 25 feet on curves.

E. Cross-sections: Original, final, and intermediate as required, for structure sites and other locations as necessary for quantity surveys. Survey borrow areas before and after removal of materials, but before final shaping.

F. As-builts: As required for structures and other features of work.

G. A licensed PLS or surveyor under direction and supervision of a PLS shall survey and stake the ROW boundaries.

3.05 ACCURACY

A. Degree of Accuracy:

1. Alignment of Tangents and Curves: Within 0.1-foot.
2. Structure Points: Set within 0.01-foot, except where installation or operation considerations require tighter tolerances.
3. Blue Tops: Set within 0.1-foot.
4. Cross-Section Points: Locate within 0.1-foot, horizontally and vertically.
5. Vertical Control Surveys: Close within 0.05-foot times the square root of the circuit length in miles.

3.06 FIELD RECORDS

A. Record field notes, computations, and other surveying data on electronic data collection devices or in fieldbooks. Field records shall be complete and an accurate record of survey.

B. Record survey data in accordance with recognized professional surveying standards:

1. Notes or data not in accordance with standard formats will be rejected.
2. Illegible notes or data or erasures on any page of a fieldbook will be sufficient cause for rejection of part or all of fieldbook.

3. Corrections by ruling or lining out errors will be permitted.
4. Copied notes or data will not be permitted.
5. Rejection of part or all of a fieldbook may necessitate resurveying.

C. Data and notes may be collected on electronic data collection devices with prior approval of COR:

1. Electronic files of notes: In approved format.
2. Include electronic files and paper copies of notes in submittals.

END OF SECTION

This page intentionally left blank.

SECTION 01 74 00
CLEANING AND WASTE MANAGEMENT

PART 1 GENERAL

1.01 MEASUREMENT AND PAYMENT

A. Cost:

1. Include in prices offered in the Price Schedule for other items of work except as specified.
2. Cost of environmental site assessments are Contractor's responsibility.

1.02 DEFINITIONS

A. Hazardous waste: Defined as hazardous by 40 CFR 261.3; or by other Federal, State, Tribal or local laws or regulations.

1.03 REFERENCE STANDARDS

A. Bureau of Reclamation (Reclamation)

1.	RSHS	Reclamation Safety and Health Standards, including revisions posted at: https://www.usbr.gov/safety/rshs/index.html

B. Code of Federal Regulations (CFR)

1.	40 CFR 261.3	Definition of Hazardous Waste
2.	49 CFR 171-179	Transportation - Hazardous Waste Regulations

1.04 SUBMITTALS

A. Submit the following in accordance with Section 01 33 00 – Submittals.

B. RSN 01 74 00-1, Waste Production and Disposal Plan:

1. For each type of waste, list estimated quantity and planned disposal location.

C. RSN 01 74 00-2, Waste Production and Disposal Records:

1. For each type of waste, list quantity and disposal location.
2. Certifications waste was properly disposed.
3. Recycled waste materials verification.
4. Hazardous wastes manifests.

D. RSN 01 74 00-3, Environmental Consultant Resume:

1. Describe experience on similar project.

E. RSN 01 74 00-4, Environmental Site Assessment.

1.05 QUALIFICATIONS

A. Environmental consultant: Minimum 2-years' experience in conducting environmental site assessments for similar construction.

1.06 REGULATORY REQUIREMENTS

A. Comply with Federal, State, Navajo Nation, local laws and regulations.

B. Comply with RSHS.

C. Conform to most stringent requirement in cases of conflict between specifications, regulatory requirements, and RSHS.

1.07 PROJECT CONDITIONS

A. Report waste materials discovered at jobsite to COR:

1. Cease work in areas where waste may be hazardous until waste materials are investigated by Government.
2. Have Environmental Consultant investigate waste materials and make recommendations for continuing work. Government will review and approve of investigation and recommendations.
3. If waste is hazardous, CO may order delays in time of performance or changes in work, or both.
4. If such delays or changes are ordered, an equitable adjustment will be made in the contract in accordance with applicable clauses of the contract.

PART 2 PRODUCTS

Not Used

PART 3 EXECUTION

3.01 PROGRESS CLEANING

A. Keep work and storage areas free from accumulations of waste materials and rubbish.

3.02 FINAL CLEANUP

A. Remove temporary plant facilities, buildings, concrete footings and slabs, rubbish, unused materials, concrete forms, and other similar materials which are not part of permanent work.

B. Leave structures "broom clean".

3.03 DISPOSAL

A. Nonhazardous waste materials:

1. Dispose by removal from jobsite.
2. Dispose of nonhazardous waste materials that are not reused or recycled at appropriately permitted disposal facilities.

B. Hazardous Waste Disposal:

1. Dispose by removal from jobsite.
2. Recycle hazardous waste whenever possible.
3. Dispose of hazardous waste materials that are not recycled at appropriately permitted treatment or disposal facilities.
4. Transport hazardous waste in accordance with 49 CFR 171-179.

C. Certification: Certify that wastes are disposed of in accordance with Federal, State, Tribal and local regulations.

3.04 SITE ASSESSMENT

A. Upon completion of work, perform site assessment at following areas for work done under these specifications:

1. Hazardous waste accumulation areas.
2. Petroleum dispensing and storage areas where aggregate storage of petroleum at jobsite was over 110-gallons.
3. Hazardous material storage areas.

B. Employ qualified environmental consultant to perform assessments.

C. Demonstrate and document by appropriate analytical sampling that site contamination is less than State action cleanup levels.

3.05 RECORDS

A. Keep records of types and amounts of waste materials produced.

B. Keep records of waste material disposal.

END OF SECTION

This page intentionally left blank.

SECTION 01 78 30
PROJECT RECORD DOCUMENTS

PART 1 GENERAL

1.01 MEASUREMENT AND PAYMENT

A. As-built and Final Drawings:

1. Payment: Lump sum price stated in the Price Schedule.

B. Operations and Maintenance (O&M) Manuals:

1. Payment: Lump sum price stated in the Price Schedule.

1.02 DEFINITIONS

A. As-built Drawings (Also known as "Red-line" Drawings):

1. Set of full size, hard-copy drawings, that contain both Government informational drawings supplied with Specifications and Contractor produced drawings that have been submitted for approval.

B. Final Drawings:

1. Complete electronic set of drawings produced by Contractor for each item requiring drawings updated to reflect all changes made in the field through installation and commissioning of each item.

C. Operations and Maintenance (O&M) Manuals:

1. Final documentation package delivered for each item requiring O&M Manuals containing all information necessary for Government to operate and maintain equipment in a safe, effective, and efficient manner. Transmitted both in bound hard-copy and electronic form. Divided into volumes with a main volume common to each item requiring O&M Manuals and unit volumes containing documentation specific to each system within each item requiring O&M Manuals.

1.03 SUBMITTALS

A. Submit the following in accordance with Section 01 33 00 – Submittals.

B. RSN 01 78 30-1, As-built Drawings:

1. Certified marked sets. As-built drawings that have been certified by Contractor as being up to date and accurate as shown in description of work.

2. Submit to COR for approval and release following commission of each system and prior to training and/or Government possession.

C. RSN 01 78 30-2, Final Drawings:

1. Submit to COR for Government approval no later than 14 calendar days following approval of RSN 01 78 30-1, As-built Drawings.

2. Updated with all changes as marked on As-built Drawings to reflect approval comments.

D. RSN 01 78 30-3, O&M Manuals:

1. Provide two sets of O&M Manuals. One for each item requiring O&M Manuals:

a. Provide both electronic copy and hard copy. Number of hard copies as indicated in Section 01 33 00 – Submittals; 01 33 00A – List of Submittals.

2. Submit O&M Manual within 60-days following commissioning of each item requiring O&M Manuals.

1.04 AS-BUILTS DRAWINGS

A. Maintain 2 sets of full-size prints of contract drawings marked to show accurate and complete records of as-built conditions. Keep drawings at jobsite and mark as work progresses:

1. Mark and dimension to show variations between actual construction and that indicated or specified in contract documents:

a. Include buried or concealed construction and utilities.

b. Include existing items, topographic features, and utility lines revealed during construction which differ from those shown on contract drawings.

2. Mark to define construction provided where choice of materials or methods is permitted in specifications, or where variations in scope or character of work from that of the original contract are authorized.

B. Use standard drafting practice to represent changes and include supplementary notes, legends, and details necessary to clearly portray as-built construction.

C. Mark as-built drawings in the following colors:

1. Red - Additions to original drawings.

2. Green - Deletions to original drawings.

3. Blue - Notations necessary for explanation of as-built markings.

D. Allow Government to review drawings during weekly construction meetings and be available at all other times.

E. Upon completion of work, and prior to training and/or Government possession, submit to COR for review and acceptance:

1. One set will be maintained by Government

a. For maintenance of changes to Government provided information drawings.

b. For verification of Final Drawings.

2. Sign marked prints as certified correct:

a. Sign and date each drawing as certified correct. Do not include or certify Information Only drawings.

b. If no revisions were necessary to illustrate as-built conditions, mark drawing with "No Changes."

c. Provide As-built drawings as outlined in Sections 01 33 00 – Submittals and 01 33 26 – Electrical Drawings and Date.

F. Provide videos, photos and other pertinent documentation and as requested by COR.

1.05 O&M MANUALS

A. O&M Manuals shall include information required by Government personnel to operate maintain, and troubleshoot equipment including at minimum the following:

1. Index sheet at front of each manual which provides page or index tab number information for each devise of item of equipment in manual.
2. Bill of Materials.
3. Manufacturer's product data sheets and operation and maintenance procedures.
4. Spare part inventory and list of any additional recommended spares that were not required by these specifications.
5. System maintenance schedule and procedures including instructions on dismantling, replacing, installing, calibrating, configuring, and troubleshooting provided equipment.
6. Description of Pumping Plant operation with operating procedures.
7. Onsite commissioning test procedures.
8. SCADA and Communications software connection procedures.
9. Performance Shop test reports.
10. Wiring and cable test reports.
11. Operational field test reports.
12. Final Drawings.

B. Any Contractor delay resulting from failure to provide timely and acceptable documents will not constitute acceptance of any time extension to the contract.

1.06 FINAL DRAWINGS

A. Update all drawings and diagrams either generated by Contractor or impacted by Contractor performed work with all modifications made during design and construction process, including all modifications made during testing and commissioning. Include all As-built drawing modifications.

B. Drawings shall represent final installed condition of facility at completion turnover of system to Government.

C. Drawings supplied as Final Drawings shall meet requirements of Final Drawings included in Sections 01 33 00 – Submittals and 01 33 26 – Electrical Drawings and Data.

D. Computer drafted drawings provided in electronic file format, compatible with AutoCAD, 2023 or later.

E. Upon completion, sign prints as certified correct:

1. Sign and date each drawing as certified correct.
2. If no revisions were necessary, mark drawing with "No Changes."

PART 2 PRODUCTS

Not Used

PART 3 EXECUTION

Not Used

END OF SECTION

SECTION 01 79 20
TRAINING

PART 1 GENERAL

1.01 MEASUREMENT AND PAYMENT

A. Cost:

1. Include in prices offered in the Price Schedule for other items of work.

1.02 DEFINITIONS

A. WTP: Water Treatment Plant

1.03 SUBMITTALS

A. Submit the following in accordance with Section 01 33 00 - Submittals and Section 01 12 16 - Work Sequence:

B. Design and 100 Percent Construction Submittals: Refer to Section 01 81 05 - General Performance Requirements.

C. RSN 01 79 20-1, Final Acceptance Testing Phase:

1. Training plan revisions.
2. End of Final Acceptance Testing Phase: Training package.

1.04 QUALIFICATIONS

A. Training Staff:

1. Training sessions shall be conducted by qualified, experienced, factory-trained representatives of the project's equipment manufacturers.
2. Familiar with the specific treatment process equipment.
3. Previous experience training WTP staff.

1.05 COORDINATION

A. The O&M manuals shall be submitted and accepted in accordance with Section 01 81 05 - General Performance Requirements before on-site training may start.

B. Training shall occur in accordance with the Training Plan, begin at the start of the Monitored Test, and continue until Final Acceptance Testing is completed. Refer to Section 01 91 16 - Facility Commissioning.

C. Coordinate instruction schedule with COR.

D. Schedule: Monday through Friday.

E. Duration: Arrange to have the training conducted on consecutive days, with no more than six (6) hours of classes scheduled for any one day.

F. Location: On-site.

G. Concurrent classes shall not be allowed.

1.06 PERFORMANCE REQUIREMENTS

A. Training shall include instruction in both operation and maintenance of the subject equipment.

B. Provide training as described in Table 01 79 20A - Training Matrix.

Table 01 79 20A - Training Matrix

Feature	Intended Audience				
	WTP Operators	Lateral Operators	Electricians	IT and SCADA Staff	Facilities Staff
WTP Process Equipment	x		x	x	
WTP Building Systems	x		x	x	x
WTP Site Utilities – Domestic water – Wastewater – Stormwater management – Primary power – Emergency power – Communication systems – Cathodic protection systems – Security and site access control	x		x	x	x
–					

PART 2 PRODUCTS

Not Used

PART 3 EXECUTION

3.01 TRAINING

A. Train staff to:

1. Operate and maintain the WTP and Lateral

B. Trainings shall consist of:

1. Formal scheduled trainings, including training on individual equipment and treatment systems prior to the Demonstration Test start.
2. Informal training accomplished while working side by side during Final Acceptance Testing.

C. Develop a training plan that identifies:

1. Training needs.
2. Number and type of trainings.
3. Schedule.
4. Level of effort.
5. Methods.
6. Training staff list and resumes.

D. Training materials shall be applicable for the intended audience. Staff from the WTP, an Electrician, and a WTP Operator may require separate trainings on some topics.

E. Include classroom lectures, demonstrations, and hands-on experience including physical inspection of the installed onsite equipment.

F. Training Materials:

1. PowerPoint presentations.
2. Generic and customized handouts.
3. Personal experience examples.
4. Drawings.
5. O&M manuals.
6. Thumb drives with programming and interface software for microprocessor based equipment.

G. For each scheduled training session, provide documentation including:

1. Typed agenda prior to the start of each training session.
2. Presentation notes.

H. Video operation and maintenance training of: Camera feed system, alarm systems, HVAC, and Pumping plants HMI.

I. Review HMI displays of generator, transfer switch, and HVAC server.

J. Where manufacturer instructions are insufficient, develop and provide procedures for WTP and conveyance system operation.

K. For process equipment, cover:

1. Equipment purpose and capabilities.
2. Operation.
3. Optimizing performance.
4. Adjustments.
5. Maintenance.
6. Repair.
7. Troubleshooting.
8. Inventory of spare parts.
9. Operational safety.
10. Emergency situation response.
11. Takedown procedures (disassembly/assembly).
12. Laboratory equipment.
13. Instrumentation.
14. System integration and electrical interlocks, if applicable.
15. Adjustable frequency drives.
16. Routine record keeping.

L. For process procedures, cover:

1. Startup.
2. Monitoring.
3. Correlations between water quality indicators and operational changes.
4. Shutdown.
5. Water sampling.
6. Compliance reporting.
7. Maintenance tracking software use.
8. Security.
9. Chemical delivery, including spill management.
10. Residuals management.

M. For each building, cover:

1. HVAC operation and maintenance.
2. Lighting operation.
3. Security operation.

4. Waste management including recycling.
5. Power distribution systems, including:
   a. Metal-clad switchgear.
   b. Motor control equipment.
   c. Switchboards.
   d. DC distribution equipment.
   e. Emergency generator.
   f. Microprocessor protection and transfer switch relays.
   g. Surge protection.
6. Communications, including telephony.
7. Fire protection.
8. Lightning protection equipment.

N. For the HMI/SCADA system, cover the following topics:
1. HMI.
2. Historian and trending.
3. Alarm and events.
4. Web access.
5. PLC programming software.
6. HMI and SCADA software, if not part of PLC programming software.

O. Training Package: At the end of the Final Acceptance Testing, include:
1. Training materials in pdf and original file format.
2. Summary document identifying formal training sessions, purposes, and associated materials.
3. Original attendance pages documenting attendees of each training session.
4. Original training certification pages for each training session signed by the Contractor's representative, manufacturer's representative, and Construction Engineer.
5. Certification shall document that training was in compliance with the Contract and met the project's requirements for operation, maintenance, and warranty.
6. Method for updating and maintaining passwords. Including list of up-to-date passwords.

P. Government will retain training materials.

Q. Operator to provide hands on training to in-coming operator, 3 months prior to completion of operation portion of the contract.

END OF SECTION

SECTION 01 80 15
COMMISSIONING AND TESTING

PART 1 GENERAL

1.01 MEASUREMENT AND PAYMENT

A. Commissioning:

1. Payment: Lump sum price offered in the Price Schedule.
   a. Does not include costs for field testing.

B. Cost:

1. Include cost of field testing in prices offered in the Price Schedule for items of work that require field testing.
   a. Prefabricated pump station, all systems, subsystems, components and appurtenances.

1.02 REFERENCE STANDARDS

A. American Society of Heating, Refrigeration, and Air Conditioning Engineers (ASHRAE):

1. ASHRAE Guideline 0-2019 — The Commissioning Process

B. International Electrical Testing Association (NETA)

1. NETA ATS-2017 — Acceptance Testing Specifications for Electrical Power Equipment and Systems

C. International Society of Automation (ISA)

1. ISA 62381-2011 — Automation Systems in the Process Industry – Factory Acceptance Test (FAT), Site Acceptance Test (SAT), and Site Integration Test (SIT)
2. ISA 62382-2012 — Automation Systems in the Process Industry – Electrical and Instrumentation Loop Check.

D. International Electrical Testing Association (NETA)

1. NETA ATS-2017 — Acceptance Testing Specifications for Electrical Power Equipment and Systems

E. National Fire Protection Association, Inc. (NFPA)

1. NFPA 70-2023 — National Electrical Code (NEC)

1.03 SUBMITTALS

A. Submit in accordance with Section 01 33 00 – Submittals, and Section 01 33 26 – Electrical Drawings and Data.

B. RSN 01 80 15-1, Qualifications

C. RSN 01 80 15-2, Test Plan.

1. Schedule for commissioning and testing.
2. Pre-commissioning photos.
3. Testing procedures.

D. RSN 01 80 15-3, Test Procedures.

E. RSN 01 80 15-4, Test Reports.

F. RSN 01 80 15-5, Discrepancy and Corrections List.

G. RSN 01 80 15-6, Post Testing and Commissioning Documentation.

1. Provide Turnover books.
2. Test Reports.
3. Issues and Resolution Log

1.04 DEFINITION

A. Commissioning:

1. Systematic process of ensuring that systems perform interactively according to the design intent and the Government's operational needs.
2. Flow testing, component testing, and SCADA system integration testing, verifying component feedback, and verifying operator and control interface with components.
3. Consists of:
   a. Encompasses and coordinates separate functions of system documentation, equipment startup, control system calibration, testing and balancing and performance testing.

B. Ensures facility is operating within requirements. Commissioning Agent (CA):

1. An independent authority, hired by the Contractor, not otherwise associated with Contractor.
2. Directs and coordinates day-to-day commissioning activities.

C. HMI: Human Machine Interface.

D. CLWTP: Cutter Lateral Water Treatment Plant

1.05 SCOPE

A. Components supplied, installed, or modified for this Project.

B. Demonstrate full facility operation through the following, minimum, operating configurations:

1. Full facility start-up and full facility shutdown.
2. Maximum facility output flow.
3. Minimum facility output flow.
4. Operation with a single pump running: Start-up, run, and shutdown each pump.
5. Operate facility systems and components from OITs during these testing activities.

C. Demonstrate correct operation of components and systems including, but not limited to the following:

1. SCADA system.
2. Information technology and cyber security.
3. Communication links.
4. Instrumentation.
5. Pumping units.
6. Valves.
7. Piping systems.
8. Water level control.
9. Electrical distribution system including motor controllers, switch gear and switchboards.
10. Fire Detection and Alarm.
11. HVAC System
12. All control and automation functions and operator interfaces used to operate and monitor facility systems with flowing water and without flowing water
    a. Demonstrate operation of all graphic displays and operator interfaces to graphic displays and HMIs:
        1) Test each setpoint and control point.
        2) Verify feedback signals shown on the HMIs and graphic displays are correct. Operate field components and instruments to demonstrate HMI and graphic display accuracy for all operating

configurations and signal ranges represented on the HMIs and graphic displays.

b. Verify each system and component interlock:

1) Ensure alarms and interlocks intended to prevent or trigger automatic operation act as planned.

2) Where simulation of feedback signal is required to verify system interlock, perform simulation at device unless device is inaccessible.

3) Provide feedback, by operating or forcing feedback from device, if it does not damage device or present safety hazard.

c. Verify all communication links between devices, including any communications links to pre-existing facility components, are transmitting correctly.

d. Adjust and tune control loops, logic, settings and HMIs, and graphic displays.

e. Simulate equipment failures:

1) Simulate abnormal operations:

a) This can be performed using activities like the following:

i. Manual shutdown of components simulating component failure.

ii. Manual adjustment of instrumentation values or feedback signal values.

iii. Blocking component startup or operation to simulate failure to operate.

iv. This simulation shall be performed by activities performed on the actual components or connections in the field and not via “soft” simulation by forcing values or simulating operations in the Control System program unless no other alternative is available.

2) Perform Loop Check testing referred to in ISA 62382:

a) Perform loop checks for all control system inputs and outputs.

b) Check the functionality of hardware and software.

c) Correct failures detected during loop checks prior to cold/dry and hot/wet commissioning activities.

f. Verify logic and operation of the system.

g. Includes all testing and commissioning activities either required or recommended in accordance with ISA 62382 and manufacturer's documentation.

13. Network:

a. Perform capture of NetFlow data between components for network and protocol analysis at time of system commissioning.

b. Verify account-based access control.

c. Validate:

1) Network architecture including port address lists and device address lists.

2) Document communication restrictions, filtering and monitoring rules through firewalls and other network components.

d. Perform additional Contractor and manufacturer recommended testing.

e. Government may perform additional cyber security related testing and verification of system with cooperation from Contractor.

f. Commissioning

1) Verify the equipment protection devices function correctly while running fully loaded and that they do not false trip.

14. Post-Commissioning Support:

a. All components shall be fully operable and ready for use by the Government prior to the start of this phase.

b. Allow for continuous operation the facility for 7 days (operations performed by the Government) to demonstrate reliability of equipment and Contractor supplied and installed equipment.

c. Post-Commissioning Support does not start until all other commissioning activities are complete.

d. Contractor shall have key personnel integral to the operation of the facility on-site, including controls specialist and maintenance technician(s).

e. In the event of equipment failure during testing, restart the testing period.

D. Demonstrate hardware and software functionality, performance, and stability.

E. Perform testing and commissioning activities either required or recommended in accordance with ISA 62381, and ISA 62382 and manufacturer's documentation, including:

1. Field verification of component rating curves and operational setpoints including tuning or adjustment of control loops or settings.

2. Independent verification of flowmeter and level sensor data.

F. Perform and support flow testing for facility-to-tank operation under rated flow conditions.

G. Implement software, settings, and graphic display modifications requested by Government as a result of testing or commissioning activities.

H. Government will demonstrate water level setpoint control with Contractor support.

a. Scenarios include: Scenarios

I. Level sensors that are part of this project shall be used for all final testing and commissioning in this specification section.

1.06 QUALIFICATIONS

A. Commissioning Agent: Currently certified as ASHRAE BCxP.

B. Entities either preparing testing or commissioning documentation or performing testing or commissioning activities shall have performed services for at least 3 installations of similar type in the past 5 years.

1.07 COMMISSIONING PROCESS

A. Phases of Testing and Commissioning Work:

1. Construction Testing:

a. Component level acceptance verification testing of components supplied, installed, or modified by Contractor.

b. Perform in accordance with requirements in other Specifications sections.

c. Includes inspections and tests at component and device level.

2. Preoperational Test Phase:

a. Inspections of complete installation.

b. Perform site acceptance testing and site integration testing in accordance with ISA 62381.

c. Perform loop checks per ISA 62382, perform verification for each loop and each input or output.

3. Commissioning (also Operational Test Phase):

a. Includes cold/dry commissioning and hot/wet commissioning activities.

b. Technical personnel shall be available onsite to provide consultation with Government personnel if questions or problems arise during testing.

4. Reliability Test Run:

a. Convey water from the CLWTP to the Regulating Tank 3 and from the Regulating Tank 3 to the DZ Regulating Tank.

b. Provide minimum 10-day facility reliability test run. At completion of other commissioning and startup activities:

1) Coordinate with COR for scheduling reliability test run. Timeframe should be chosen to allow water to be continuously run through the installation.

2) If a malfunction occurs during reliability test run, restart test run at Contractor's expense.

a) Malfunction: Failure of system or component to perform satisfactorily which prevents river-to-reservoir water conveyance for 1 hour or more.

3) During test run, Government personnel will perform normal system control actions using Contractor supplied equipment.

c. Contractor shall be onsite to address problems.

1.08 COMMISSIONING PROCESS DOCUMENTATION

A. General

1. Prepare commissioning process documentation to represent a testing program in accordance with guidelines in ISA 62381 and ISA 62382.

2. Inspection, testing and commissioning documentation shall include the following:

a. Name and signature of person performing the test.

b. Date at which the test was performed.

c. Identification of component, equipment, or system tested.

d. Identification of tests performed.

e. Summary of results of test or inspection activity, including positive identification for each activity of whether system or component passed or failed.

f. Any data or readings taken during the test to verify component, equipment, or system acceptance.

B. Generate the following documentation:

1. Test Plan:

a. Specific detailed test plan of the testing and commissioning activities planned for the site. Includes:

1) Schedule and sequencing of activities and specific tests to be performed on individual components and the system.

2) Photographs of constructed elements, prior to testing.

2. General procedures for planned testing and commissioning activities including how flow and velocity will be measured, any initial water surface measurement equipment, steps for adjustments as necessary. Test Procedures.
    a. Detailed procedures for planned testing and commissioning activities.
        1) In accordance with specifications and manufacturer's recommendations.
        2) If references are used in testing procedures, include a copy of references used in testing procedures.
    b. If pressurization of system is required in testing procedures or specifications, describe how system shall be pressurized, how pressurized water or air will be discharged, and where water or air source will be obtained.
        1) Use potable water to test potable water systems.
3. Test Reports:
    a. Typed, 8 1/2- by 11-inch sheets.
    b. Certified, signed, dated, and attested to having passed requirements and tests.
    c. Provide data summary and necessary graphs and plots of tests performed.
    d. Available for COR review upon request.
    e. Use in preparing final drawings.
    4.
5. As-Built Drawings: In accordance with Sections 01 78 30 – Project Record Documents, and 01 33 26 – Electrical Drawings and Data.
6. Maintain a list of discrepancies found during inspection, testing, and commissioning activities and how corrected.
7. Testing, Maintenance, and Commissioning Documentation:
    a. Turnover Books or Mater Testing Binder:
        1) Contractor assembled and maintained at jobsite.
        2) Contains records of all testing and commissioning activities performed, including specific test data and reports.
        3) Updated as each test or commissioning activity is performed.
        4) Available for COR review immediately upon request.
        5) Maintain turnover books onsite in a secure location. Contractor shall not remove the turnover book from the site without specific written approval from the COR.
    b. Maintenance Log:
        1) Contractor assembled and maintained at jobsite.

2) Organized by individual component and system.

3) Document Contractor-performed maintenance activities, including associated testing and inspection reports.

4) Maintain onsite in secure location. Do not remove from site without specific written approval from COR.

1.09 COORDINATION

A. Complete start-up and checkout procedures and ensure readiness of equipment and systems prior to start of functional performance testing phase:

1. Request written confirmation of system readiness for performance testing from appropriate subcontractor, as applicable.
2. Confirm date and times for functional performance testing after readiness confirmation is received for related systems.
3. Provide sufficient time and qualified representatives to complete this process.

B. Coordinate commissioning activities with Government:

1. In accordance with 01 31 19 – Project Management and Coordination.
2. Inform COR in writing of scheduled activities a minimum of 14 days prior to performing activity to allow Government opportunity to witness.
3. Notify COR in writing a minimum of 60 days prior to any activities intended to move water in the installation.
4. Complete each phase of testing and commissioning work and request written confirmation of completion prior to continuing to next phase.
5. Do not schedule testing until procedures are approved.

C. Government will:

1. Witness final functional performance commissioning process.
2. Attest to witnessing final functional performance commissioning process.
3. Final acceptance will be approval of submittal.

D. Government may:

1. Witness inspection, testing, or commissioning activities.
2. Perform additional equipment testing on site with cooperation of Contractor to verify operability of equipment.

1.10 SEQUENCING

A. Complete testing requirements of other Sections.

B. Refer to Section 01 12 10 – Other Contracts and Section 01 14 12 – Work Restrictions and Limitations for additional coordination and scheduling considerations.

C. Do not schedule commissioning activities until commissioning procedures are approved.

PART 2 PRODUCTS

Not Used

PART 3 EXECUTION

3.01 GENERAL

A. Provide instrumentation, test equipment, and personnel necessary for performing tests.

3.02 COMMISSIONING PROCESS

A. Coordinate with COR.

B. Phases of Testing and Commissioning Work:

1. Construction Testing:
   a. Perform in accordance with the requirements in these Specifications.
   b. Includes inspections and tests at the component level.
2. Preoperational Test Phase: Inspections of complete installation.
3. Commissioning:
   a. If a malfunction occurs during the commissioning restart the phase.
4. Post-Commissioning Support:
   a. During the Post-Commissioning Support, Government personnel will perform normal system control actions using the Contractor supplied equipment.
   b. Technical personnel shall be available onsite to provide consultation with Government personnel if any questions or problems arise during the test.

3.03 EQUIPMENT SPECIFIC TESTING REQUIREMENTS

A. General:

1. These requirements are in addition to those listed elsewhere in Specifications and Contractor-developed testing and commissioning documentation.
2. Meet equipment manufacturer performance requirements.
3. Inspect equipment and components for dirt, foreign material, and damage to component or coatings.

4. Flush and replace lubricants where required by manufacturer or by condition of lubricating material.
5. Check and adjust shaft and coupling alignments.
6. Check and correct leveling plates, bearing plates, anchorage devices, fasteners, and alignment of components.
7. Operate valves, motors, and other devices.

B. SCADA System:

1. Demonstrate accurate operation of graphic displays and operator interfaces to graphic displays and HMIs.
   a. Test each setpoint and control point.
   b. Operate field components and instruments for operating configurations and signals represented on HMIs and graphic displays to verify accuracy of feedback signals.
2. Verify system and component interlocks:
   a. Ensure alarms and interlocks intended to prevent or trigger automatic operation act as intended.
   b. Where simulation of feedback signal is required to verify system interlock, perform simulation to verify system interlock unless device is inaccessible.
   c. Provide feedback, by operating or forcing feedback from device, if it does not damage device or present safety hazard.
3. Check equipment during startup and shutdown sequences.
4. Check system setpoints across full range of operation.
5. Check alarms and annunciation points.
6. Check and adjust process timing sequences to improve system operation.
7. Adjust and tune control loops, logic, settings and HMIs, and graphic displays.
8. Simulate equipment failures:
   a. Simulate abnormal operations using activities such as:
      1) Manual shutdown of components simulating component failure.
      2) Manual adjustment of instrumentation values or feedback signal values.
      3) Blocking component startup or operation to simulate failure to operate.
      4) Perform simulation activities on components or connections in field and not via “soft” simulation by forcing values in SCADA or control system program unless no other alternative is available.

b. Perform Loop Check testing referred to in ISA 62382:

1) Perform loop checks for all SCADA and control system inputs and outputs.

2) Check functionality of hardware and software.

3) Correct failures detected during loop checks prior to cold/dry and hot/wet commissioning activities.

9. Verify logic and operation of system.

10. Demonstrate operation under each control mode.

11. Demonstrate operation of alarm call out system.

C. Information Technology and Cyber Security:

1. Capture NetFlow data between components for network and protocol analysis at time of system commissioning.

2. Perform vulnerability scan and correct deficiencies.

3. Verify account-based access control.

4. Validate network architecture including port address lists and device address lists.

5. Validate and document communication restrictions, filtering, and monitoring rules through firewalls and other network components.

6. Perform additional Contractor- and manufacturer-recommended testing.

7. Government may perform additional cyber security related testing and verification of system. Contractor shall support Government during testing.

D. Communication Links:

1. Verify cable is free of defects and meets design and manufacturer's guidelines.

2. Verify communication links between devices.

3. Demonstrate feedback signals are transmitting correctly and are operating correctly between facilities.

E. Instrumentation:

1. Inspect each gauge, sensor, transmitter, thermometer, water quality meters, and other instruments. Replace defaced or broken items.

2. Inspect instrument tubing.

3. Field verify calibration and performance of each instrument. Document results for each instrument on separate field calibration sheet. Include, at minimum:

a. Input, output, and error at 0, 25, 75, and 100 percent of span for analog instruments.

b. Switch setting, contact action, and deadband, if applicable, for discrete elements.

F. Pumps and Motors:

1. Check:

   a. Motor ampacity against nameplate ratings.

   b. Belt tension where applicable.

   c. Glands and seals.

2. Record current draw of motor.

3. Inspect shaft sleeves.

4. Inspect mechanical faces, chambers, and seal rings, and replace if defective.

5. Bump start electric motors to verify rotation.

G. Valves:

1. Open and close each valve through full range of operation 3 times after installation.

H. Flowmeter Simulated Tests:

1. Apply simulated flow signal inputs. Simulated signals to cover minimum and maximum flows over the velocity range.

2. Check displays for correct readouts, and check each I/O (input/output) point for correct I/O signal.

3. Test each output connection for correct output conformance.

4. Verify all instrumentation and indication devices function properly. Test all functions of flowmeter transmitter for correct operation.

I. Piping Systems:

1. Verify piping system is clean and free of foreign matter before filling.

2. Perform hydrostatic testing, see Section 35 21 95 - Steel Pipe and Section 22 11 35 - Prefabricated Pump Station.

3. Tighten flanges and other pipe joints after system has been placed in operation.

4. Replace gaskets that show signs of leakage after tightening.

5. Inspect joints for leakage:

   a. Promptly remake each joint that appears to be faulty; do not wait for corrosion to form.

   b. Clean threads, apply compound, and remake joints.

6. After system has been placed in operation, clean strainers, drives, pockets, orifices, valve seats, and headers in fluid system to ensure freedom from foreign matter.

J. Electrical Distribution System:

1. Perform equipment testing in accordance with NETA ATS and Division 26 specifications.
2. Check and document settings for electrical protection and metering components.

K. Hydrostatic Pressure Test:

1. Perform pressure test once all equipment has been connected within the building and to the yard pipe connections.
2. Use 2 or more pressure gauges with one being a recording type:
   a. Upper limit of pressure gauges shall be between 1.5 and 3 times required test pressure. Calibrate pressure gauges with a deadweight tester.
   b. Calibrate at least 1 gauge, which is used for acceptance of test, within 30-days prior to use.
   c. Make a time-pressure record of hydrostatic pressure test.
3. Furnish temporary supports, bulkheads, air vents, dead weight tester, and other equipment necessary to perform hydrostatic tests.
4. Water temperature for tests: Greater than 45 degrees F.
5. Vent air from test sections.
6. Fill each section with water and uniformly increase pressure until required test pressure is reached:
   a. Hydrostatic test pressure = 50 psig
   b. Hold test pressure for a minimum of 15-minutes.
   c. Visually inspect pressurized pipe and pipe connections for leaks.
   d. Apply and release test pressure 3 successive times.
   e. After each application, hold pressure to 2/3 of required pressure until welded joints and seams can be examined.
   f. Repair defects. After defects are repaired repeat complete test procedure.

L. Flow Testing:

1. Operate pumps and associated valves in both manual and automatic control mode to verify proper operation of components, condition of components, and documentation of any leakage or vibrations:
2. Demonstrate ability of facility to operate within designed operating range. Include operation at maximum and minimum facility output flows:
3. Full facility start-up and full facility shutdown.
4. Operation with a single pump running:
   a. Start-up, run, and shutdown each pump.
5. Operate facility systems and components from the SCADA and control system graphic displays during the flow testing activities.

6. Refer to Annex A of ISA 62382 for guidance on testing of hydraulic equipment during commissioning.
7. Simulate abnormal operations and failures of instrumentation and actuators/valves:
    a. Simulations should include but are not limited to:
        1) Valve actuator failure.
        2) Tank water level limit switch failures.
        3) Loss of instrumentation signal.
8. Government:
    a. Will provide general guidelines for operating points to test and time interval to test.
    b. May perform additional testing and verification of system with cooperation from Contractor.
9. Contractor:
    a. Specific test procedures.
    b. Onsite technical personnel for support during testing.
    c. Provide Master Test Procedure Binder prior to start of commissioning. Include:
        1) Comprehensive set of test procedures and test plans for all testing, commissioning, and inspection activities required in this specification or in other specifications in this contract package.
        2) Schedule and sequencing of testing activities.
    d. Test reports:
        1) Typed.
        2) Certified, signed, dated, and attested to having passed requirements and tests.
        3) Include data summary and necessary graphs and plots of tests performed.
        4) Available for COR review upon request.

END OF SECTION

This page intentionally left blank.

SECTION 02 41 10
DEMOLITION

PART 1 GENERAL

1.01 MEASUREMENT AND PAYMENT

A. Site Demolition:

1. Payment: Lump-sum price offered in the Price Schedule.

   a. Includes:

      1) Demolition of Site Features and Miscellaneous Structures. Includes removal and/or demolition of:

         a) Dirt access road as indicated on the drawings

         b) Chain-link fencing and gates as indicated on the drawings

         c) Gravel surfacing as indicated on the drawings

         d) Rip-rap as indicated on the drawings

         e) Cathodic protection as indicated on the drawings 1695-D-62394 and 1695-D-62395.

      2) Removal and disposal of existing concrete.

         a) For demolition and disposal of concrete, see Section 03 81 10 – Concrete Removal.

      3) Removal, Transportation, and disposal of demolished materials in accordance with applicable regulations.

      4) Surface restoration, including backfilling, and grading after demolition.

      5) Necessary permits, notifications, and compliance with regulatory requirements.

B. Cost:

1. Include cost of clearing and grubbing in prices offered in the Price Schedule for items of work requiring clearing and grubbing of materials.

1.02 REFERENCE STANDARDS

A. National Fire Protection Association (NFPA)

1. NFPA 241-22 Safeguarding Construction, Alteration, and Demolition Operations

1.03 SUBMITTALS

A. Submit the following in accordance with Section 01 33 00 - Submittals.

B. RSN 02 41 10-1, Demolition Plan:

1. Detailed sequence of demolition work with starting and ending dates.

C. RSN 02 41 10-2, Notifications and Permits:

1. Copies of required federal, tribal, state, and local demolition permits.

1.04 PROJECT CONDITIONS

A. Refer to drawings 1695-D-62032, for known items to be demolished.

B. Additional items may be encountered during demolition and shall be addressed as approved by the COR.

C. The locations of known underground and overhead utilities are indicated in the drawings; any unidentified utilities shall be removed per COR direction.

D. Salvageable items shall be identified and removed as directed by the COR.

E. See Section 51 02 82 - Hazardous Materials Survey and Analytical Results. The concrete was sampled and analyzed for asbestos under CARB435. No asbestos was detected.

1.05 Permits

A. Obtain Federal, Tribal, State, and local permits required to demolish, remove, and dispose of the materials.

PART 2 PRODUCTS

Not Used

PART 3 EXECUTION

3.01 EXAMINATION

A. Field verify all dimensions, locations and equipment prior to demolition. Notify Reclamation immediately upon finding of different conditions than shown on drawings.

3.02 GENERAL

A. Locate and mark existing utilities per Section 01 56 15 – Protection of Existing Utilities.

B. Remove or abandon items identified on drawings.

3.03 PROTECTION

A. Provide protection for personnel and existing facilities from harm due to the Contractor's operations.

1. Do not damage existing structures and equipment not part of demolition activities.

B. Arrange protective installations to permit operation of existing equipment and facilities by the Government while work is in progress.

C. Where open excavations or other hazardous conditions remain, leave temporary barriers and protections in place.

D. Remove temporary barriers and protections where hazards no longer exist.

3.04 REMOVAL AND DISPOSAL

A. Comply with Federal, Tribal, State, and local regulations.

B. Demolish or remove existing installations shown on the drawings.

1. Use of explosives is not permitted.

C. Remove existing fence

1. Fence may be reinstalled if no damage has occurred during demolition

D. Remove gravel

1. Gravel may be reinstalled in accordance with Section 32 15 10 – Gravel Surfacing.

E. Dispose of non-hazardous materials in accordance with Section 01 74 00 – Cleaning and Waste Management.

F. Remove above grade components of existing cathodic protection system from Regulating Tank site #3 yard:

1. Removal of test stations in accordance with Section 26 42 00.

3.05 FILL

A. Furnish and place imported clean fill to final grades shown on drawings.

B. Spread and compact fill in accordance with Section 31 23 02 – Compacting Earth Materials.

3.06 REPLACE

A. Replace perimeter fencing with new fence at locations shown on drawings, and in accordance with Section 32 31 10 – Chain Link Fence.

B. Replace gravel as shown on drawings, and in accordance with Section 32 15 10

1. All gravel material must be washed before it can be reused.

3.07 REMOVAL OF PROTECTIVE INSTALLATIONS

A. Remove protective installations after purpose has been served. Materials furnished by the Contractor to provide protection remain property of the Contractor.

3.08 REPAIR

A. Repair, at Contractor's expense, damage to existing installations due to Contractor's operations or Contractor's failure to provide proper protection.

END OF SECTION

SECTION 03 11 10
CONCRETE FORMING

PART 1 GENERAL

1.01 MEASUREMENT AND PAYMENT

A. Cost:

1. Include cost of furnishing and constructing forms in applicable prices offered in the Price Schedule for concrete items for which forms are required.

1.02 REFERENCE STANDARDS

A. American Concrete Institute (ACI)

1. ACI 318-19 — Building Code Requirements for Structural Concrete and Commentary

B. APA - The Engineered Wood Association (APA)

1. APA PS 1-09 — Structural Plywood

C. Bureau of Reclamation (Reclamation)

1. RSHS — Reclamation Safety and Health Standards, including revisions, available at https://www.usbr.gov/safety/rshs/index.html

D. Western Wood Products Association (WWPA)

1. WWPA WLGR-17 — Western Lumber Grading Rules

1.03 SUBMITTALS

A. Submit the following in accordance with Section 01 33 00 - Submittals.

B. RSN 03 11 10-1, Formwork Design and Drawings:

1. Include design and drawings for:
   a. all elements requiring formwork
2. Designed and stamped by registered professional engineer.
3. Design Calculations, stamped by a registered professional engineer.
4. Include product data for any alternative formwork materials.

1.04 DESIGN

A. Design formwork in accordance with RSHS.

PART 2 PRODUCTS

Not Used

PART 3 EXECUTION

3.01 FORM MATERIALS

A. Sheathing or Lining: Conform to Table 03 11 10A - Form Sheathing or Lining Materials or provide other materials which will produce equivalent results.

Table 03 11 10A – Form Sheathing or Lining Materials

Finish	Wood sheathing or lining	Steel sheathing or lining
F1	Any grade common board or plywood	Steel sheathing permitted Steel lining permitted
F2	No. 2 common or better, shiplap, or plywood	Steel sheathing permitted Steel lining permitted if approved
F3	Plane surfaces: Plywood. Warped surfaces: Plywood, or lumber which is free from knots and other imperfections and which can be cut and bent accurately without splinters or splitting. Severe curvature: May be lined with continuously supported flexible material such as masonite or thin plywood. Use of material is subject to COR approval.	Steel sheathing permitted. Steel lining not permitted.
Textured Surface	Use form liner specified for textured surface	Steel sheathing not permitted Steel lining not permitted

B. Steel sheathing is steel sheets not supported by wood backing. Steel lining is thin sheets supported by wood backing.

C. Wood Sheathing or Lining: Softwood or plywood of such kind and quality and treated or coated so that deterioration or discoloration of formed concrete surfaces due to chemical action, contamination, or uneven absorption of water from concrete is prevented.

D. Plywood: APA PS 1, Exterior, Grade B-B Concrete Form, Class I, mill oiled, and edge sealed.

E. Softwood Lumber:

1. Meet requirements of WWPA WLGR for dressed lumber or worked lumber of specified grade.
2. Use common boards surfaced on both edges (S2E) in accordance with WWPA WLGR.
3. Use 6- or 8-inch-wide lumber for shiplap forms.
4. Use same lumber width in forms for F2 finishes.

F. Aluminum sheathing or formwork is not permitted to be in contact with fresh concrete.

3.02 INSTALLATION

A. Construct forms to confine and shape concrete to required lines so that completed work meets specified structural deviations, surface tolerances, and finish requirements.

B. Construct forms with sufficient strength to withstand pressure from placing and vibrating concrete. Maintain in proper position.

C. Adjust formwork design and concrete placing rate to compensate for hydraulic pressures exerted on forms by concrete with high fluidity.

D. Where form vibrators are to be used, construct forms with sufficient rigidity to effectively transmit energy from form vibrators to concrete without damaging formwork or altering form position.

E. Seal surfaces and joints of forms to prevent absorption of water into forms or loss of mortar from concrete.

F. Place chamfer strips in corners of forms and at tops of wall placements to bevel edges of permanently exposed concrete surfaces. Do not bevel interior angles of intersecting concrete surfaces and edges of construction joints except as indicated on drawings.

G. Install sufficient plumb and string lines to monitor formwork positions before concrete placement. Monitor plumb and string lines during concrete placement and correct deficiencies in formwork.

H. F2 Finish:

1. Use 1 type of form sheathing or lining material for exposed F2 surfaces.
2. Construct forms to produce a uniform and consistent texture and pattern on face of concrete. Metal patches on forms are not permitted.
3. Place form sheathing or lining so that horizontal form marks are continuous across entire surface.

4. For forms constructed of plywood form lining or shiplap panels, make vertical form marks continuous for entire height of surface.
5. For forms constructed of shiplap, which is not paneled, cut boards square, stagger vertical joints in boards, and place vertical joints at studs.

I. F3 Finish:

1. Construct forms to produce a uniform and consistent texture and pattern on face of concrete. Metal patches on forms are not permitted.
2. Align sheathing or lining horizontally and vertically and place to minimize joint marks on surfaces.
3. Place form sheathing or lining so that horizontal form marks are continuous across entire surface.
4. Make vertical form marks continuous for entire height of surface.
5. Fill and smooth finish voids at joints in plywood form lining or sheathing.
6. Do not construct forms continuously from lift to lift. Remove forms after concrete in a lift has hardened and reset forms for next lift.
7. Reset forms to overlap hardened concrete in previous lift by 1 inch, maximum.
8. Tighten forms snugly against hardened concrete so that forms will not spread and cause offsets or loss of mortar at construction joints when concrete placement is resumed. Provide additional bolts or form ties required to hold reset forms tight against hardened concrete.

J. Form Ties and Anchors:

1. Embed ties for holding forms.
2. Terminate ties not less than 2 diameters or twice minimum dimension of tie, whichever is greater, from formed surface of concrete, except where F1 finish is permitted.
3. Install ties so ends or end fasteners can be removed without causing spalling at face of concrete.
4. Provide form anchors as required to ensure that concrete surfaces will meet specified tolerances. Replace form anchors embedded in concrete which are loosened before placement of adjoining concrete with other supports firmly embedded in hardened concrete.

K. Cleaning and Oiling Forms:

1. Clean form surfaces of encrustations of mortar, grout, or other foreign material.
2. Coat form surfaces with a form oil which will prevent sticking and will not soften or stain concrete surfaces or cause concrete surface to become chalky or dust producing.

3.03 REMOVAL

A. Remove forms within 24 hours after concrete has gained sufficient strength to prevent damage by form removal.

1. Non-supporting forms such as sides of beams, walls, columns, and similar items: Remove after cumulatively curing at not less than 50 degrees F for 24 hours from time of concrete placement when:

   a. Concrete is sufficiently hard so as not to sustain damage by form removal operations.

   b. Curing protection is maintained.

2. Forms for elevated structural slabs or beams:

   a. Remove in accordance with ACI 318, Chapter 26.

   b. Do not remove forms until concrete has reached compressive strength of at least 80 percent of specified 28-day compressive strength, as determined by test cylinders.

3. Forms on upper sloping faces of concrete, such as forms on waterside of warped transitions: Remove as soon as concrete has attained sufficient stiffness to prevent sagging.

4. Wood forms for wall openings: Loosen as soon as loosening can be accomplished without damage to concrete to prevent excessive stress in concrete from swelling of forms. Construct forms for openings to facilitate loosening.

B. Do not remove forms until concrete strength is such that form removal will not result in perceptible cracking, spalling, or breaking of edges or surfaces, or other damage to concrete.

C. Remove forms in a manner which prevents damage to concrete.

D. Repair damaged concrete in accordance with Section 03 30 00 – Cast-in-Place Concrete.

E. Begin required repair and curing immediately after form removal.

END OF SECTION

This page intentionally left blank.

SECTION 03 20 00
CONCRETE REINFORCING

PART 1 GENERAL

1.01 MEASUREMENT AND PAYMENT

A. Cost:

1. Include cost of reinforcing steel in applicable prices offered in the Price Schedule for concrete items.

1.02 REFERENCE STANDARDS

A. American Concrete Institute (ACI)

1.	ACI 315R-18	Details and Detailing of Concrete Reinforcement (Part of SP-66-04 ACI Detailing Manual)

B. ASTM International (ASTM)

1.	ASTM A615/A615M-24	Deformed and Plain Carbon-Steel Bars for Concrete Reinforcement
2.	ASTM A996/A996M-24	Rail-Steel and Axle-Steel Deformed Bars for Concrete Reinforcement

1.03 SUBMITTALS

A. Submit in accordance with Section 01 33 00 – Submittals.

B. RSN 03 20 00-1, Reinforcement Diagrams and Lists:

1. Bar-placing diagrams, bar lists, and bar-bending diagrams required for reinforcement fabrication and placement:

   a. Prepare bar-placing diagrams, bar lists, and bar-bending diagrams in accordance with ACI 315 and drawings.

1.04 DELIVERY, STORAGE, AND HANDLING

A. Store reinforcement of different sizes and shapes in separate piles or racks raised above the ground to avoid rusting.

B. Protect from contaminants such as grease, oil, and dirt.

C. Furnish identification after bundles are broken and tags removed.

PART 2 PRODUCTS

2.01 STEEL REINFORCING

A. Reinforcing Bars:

1. ASTM A615, Grade 60; or ASTM A996, Type A, Grade 60.
2. Deformed steel bar.

B. Dowel Bar System:

1. Smooth Dowel Bars: ASTM A615, Grade 50, plain round.
2. Speed Dowel System, as manufactured by Greenstreak, Inc. www.greenstreak.com or equal having the following essential characteristics:
   a. Manufactured to accept smooth bars.
   b. Two component system, including a closed end sleeve to allow for axial movement and a reusable attachment base.
   c. Compressibility of the system shall exceed 4,500 lbs/in^2.

2.02 ACCESSORIES

A. Chairs, hangers, spacers, and other supports:

1. Material: Concrete, metal, or other approved material:
   a. Compressive strength of precast concrete blocks: Equal to or greater than surrounding concrete.
2. Exposed portions of supports on concrete surfaces designated to receive F2 or F3 finish:
   a. Galvanized, plastic coated, or corrosion-resistant material.
   b. Concrete supports not allowed.

PART 3 EXECUTION

3.01 INSTALLATION

A. Clean reinforcement surfaces of heavy, flaky rust; loose mill scale; dirt; grease; and other foreign substances before placement.

B. Field bending not allowed unless approved by COR:

1. Do not use heat to bend.

C. Do not use torch to cut.

D. Accurately place reinforcement:

1. Place reinforcement as shown on Standard Drawing 40-D-60003 and 40-D-60004, unless otherwise shown on reinforcement design drawings.
2. Unless otherwise prescribed, placement dimensions shall be to centerline of the bars.
3. Place reinforcement with a clear distance of 1 inch, minimum, between reinforcement and anchor bolts, form ties, or other embedded metalwork unless otherwise shown on drawings.

E. Splices:

1. Locate where shown on drawings, unless otherwise approved by COR.
2. Reinforcement may be spliced at additional locations for the convenience of Contractor, subject to approval of COR.

F. Do not weld or tack weld reinforcing bars.

G. Secure reinforcement in place so that it will not be displaced during concrete placement.

H. Do not disturb reinforcement in concrete that has been placed.

I. Tolerances:

1. Maintain concrete cover over reinforcement within 1/2 inch of specified cover where specified cover is greater than 2 1/2 inches.
2. Maintain concrete cover over reinforcement within 1/4 inch of specified cover where specified cover is 2 1/2 inches or less.
3. Maintain spacing of reinforcing bars within 1 inch of required spacing.

J. Embedded Dowels:

1. Place dowels at locations shown on drawings.
2. Position dowels parallel to each other and to concrete surface as shown on drawings.
3. Maintain dowels accurately in position during concrete placement.

END OF SECTION

This page intentionally left blank.

SECTION 03 30 00
CAST-IN-PLACE CONCRETE

PART 1 GENERAL

1.01 MEASUREMENT AND PAYMENT

A. Concrete:

1. Measurement: Volume of concrete measured to structure neatlines shown on drawings:

   a. Where concrete is placed on or against excavated surfaces, measurement will be made to lines for which payment for excavation is made.

   b. Measurement of other concrete will be made to structure neatlines as shown on drawings.

   c. Volume of openings, recesses, embedded pipes, and metalwork larger than 100 square inches in cross section will be deducted.

2. Payment: Cubic yard prices offered in the Price Schedule:

   a. Includes:

      1) Cost of work and materials for concrete except as specified.

      2) Includes cost of cementitious materials.

   b. No payment will be made for:

      1) Wasted concrete.

      2) Replacement of damaged or defective concrete.

      3) Concrete used to fill overexcavated areas.

      4) Concrete placed by Contractor in excavations intentionally performed to facilitate Contractor's operations.

B. Cost:

1. Include cost of concrete for the following, in applicable prices offered in the Price Schedule:

   a. Chain link fences including cementitious materials and reinforcing.

1.02 ACRONYMS

A. NRMCA: National Ready Mixed Concrete Association.

1.03 DEFINITIONS

A. Supplementary Cementitious Materials (SCM): Cementitious materials other than portland cement.

1.04 REFERENCE STANDARDS

A. American Concrete Institute (ACI)

1.	ACI 117-10(R2015)	Tolerances for Concrete Construction and Materials
2.	ACI 201.2R-16	Durable Concrete
3.	ACI 301-20	Concrete Construction
4.	ACI 304-00(R2009)	Guide for Measuring, Mixing, Transporting, and Placing Concrete
5.	ACI 305.1-14(2020)	Hot Weather Concreting
6.	ACI 306.1-16	Cold Weather Concreting

B. ASTM International (ASTM)

1.	ASTM C31/C31M-24b	Making and Curing Concrete Test Specimens in the Field
2.	ASTM C33/C33M-24a	Concrete Aggregates
3.	ASTM C39/C39M-24	Compressive Strength of Cylindrical Concrete Specimens
4.	ASTM C42/C42M-20	Obtaining and Testing Drilled Cores and Sawed Beams of Concrete
5.	ASTM C94/C94M-24c	Ready-Mixed Concrete
6.	ASTM C114-24	Chemical Analysis of Hydraulic Cement
7.	ASTM C117-23	Materials Finer than 75-µm (No. 200) Sieve in Mineral Aggregates by Washing
8.	ASTM C136/C136M-19	Sieve Analysis of Fine and Coarse Aggregates
9.	ASTM C138/C138M-24a	Density (Unit Weight), Yield, and Air Content (Gravimetric) of Concrete
10.	ASTM C143/C143M-20	Slump of Hydraulic-Cement Concrete
11.	ASTM C150/C150M-24	Portland Cement
12.	ASTM C171-20	Sheet Materials for Curing Concrete
13.	ASTM C231/C231M-24	Air Content of Freshly Mixed Concrete by the Pressure Method

14.	ASTM C260/C260M-10a(2016)	Air-Entraining Admixtures for Concrete
15.	ASTM C295/C295M-19	Petrographic Examination of Aggregates for Concrete
16.	ASTM C309-19	Liquid Membrane-Forming Compounds for Curing Concrete
17.	ASTM C494/C494M-24	Chemical Admixtures for Concrete
18.	ASTM C566-19	Total Evaporable Moisture Content of Aggregate by Drying
19.	ASTM C595/C595M-24	Blended Hydraulic Cements
20.	ASTM C618-23e1	Coal Fly Ash and Raw or Calcined Natural Pozzolan for Use in Concrete
21.	ASTM C920-18(2024)	Elastomeric Joint Sealants
22.	ASTM C989/C989M-24	Slag Cement for Use in Concrete and Mortars
23.	ASTM C1064/C1064M-23	Temperature of Freshly Mixed Hydraulic-Cement Concrete
24.	ASTM C1116/C1116M-10a(2015)	Fiber-Reinforced Concrete
25.	ASTM C1260-23	Potential Alkali Reactivity of Aggregates (Mortar-Bar Method)
26.	ASTM C1293/C1293M-23a	Determination of Length of Change of Concrete Due to Alkali-Silica Reaction
27.	ASTM C1315-19	Liquid Membrane-Forming Compounds Having Special Properties for Curing and Sealing Concrete
28.	ASTM C1567-23	Determining the Potential Alkali-Silica Reactivity of Combination of Cementitious Materials and Aggregate (Accelerated Mortar-Bar Method)
29.	ASTM C1602/C1602M-22	Mixing Water Used in the Production of Hydraulic Cement Concrete
30.	ASTM D395-18	Rubber Property – Compression Set
31.	ASTM D471-16a(2021)	Rubber Property – Effect of Liquids
32.	ASTM D792-20	Density and Specific gravity (Relative Density) of Plastics by Displacement
33.	ASTM D1751-23	Preformed Expansion Joint Filler for Concrete Paving and Structural Construction (Non-extruding and Resilient Bituminous Types)

34.	ASTM D1752-18(2023)	Preformed Sponge Rubber Cork and Recycled PVC Expansion Joint Fillers for Concrete Paving and Structural Construction
35.	ASTM D2240-15(2021)	Rubber Property – Durometer Hardness

C. Bureau of Reclamation (Reclamation)

1.	USBR M-47	Standard Specifications for Repair of and Maintenance of Concrete, August 2015 (Part 2 of "Guide to Concrete Repair, Second Edition" available at www.usbr.gov/tsc/techreferences/mands/mands-pdfs/guide.pdf
2.	Concrete Manual	Concrete Manual, Eighth Edition, Revised Reprint, 1981

D. International Concrete Repair Institute (ICRI)

1.	ICRI 310.2R-13	Guide for Selecting and Specifying Concrete Surface Preparation for Sealers, Coatings, and Polymer Overlays (formerly No. 03732)

E. International Organization for Standardization (ISO)

1.	ISO 8067-2018	Flexible cellular polymeric materials – Determination of tear strength.

F. National Sanitation Foundation International (NSF)

1.	NSF/ANSI 61-2023	Drinking Water System Components - Health Effects

G. US Army Corps of Engineers (USACE)

1.	USACE CRD-C 662-10	Determining the Potential Alkali-Silica Reactivity of Combinations of Cementitious Materials, Lithium Nitrate Admixture and Aggregate (Accelerated Mortar-Bar Method)

1.05 SUBMITTALS

A. Submit in accordance with Section 01 33 00 – Submittals.

B. RSN 03 30 00-1, Approval Data:

1. Mix Design: For each concrete mix:

   a. Mixture proportions.

   b. Material sources:

1) Name and manufacturer of each cementitious material:

a) Cementitious Materials Certification and Test Reports:

i. Less than 3 months old.

2) Name of aggregate source(s).

3) Product name and manufacturer of admixtures to be used in mix. Certify that admixtures:

a) Contain no purposefully added chlorides.

b) Chloride ion limits in accordance with ACI 201.2R.

4) Government reserves the right to require submission of samples of concrete materials for testing before or during use in concrete.

c. Physical properties:

1) Compressive strength:

a) Test data: ACI 301, paragraph 4.2.3.4.

b) Field test data: Performed within past 24 months.

c) Trial mixtures:

i. Incorporate admixtures that will be used in production mixes into trial mixes.

ii. Results from trial batches made within past 6 months.

iii. Trial mix test results, three 6-inch diameter cylinders each at 7 and 28 days.

iv. Average compressive strength of trial batch cylinders at specified design age.

d. Resubmit mix design for change in material source or type.

2. Submit synthetic macro fiber manufacturer product data:

a. Application rate and mixing instructions

b. Certification that fiber complies with specified requirements.

3. Name and manufacturer of curing compounds, and joint filler:

a. Include application instructions for curing compound.

4. Aggregate and Water Certifications and test reports:

a. Sealed by Professional Engineer.

b. Less than 12 months old.

c. Certifications and test reports:

1) Aggregate producer for:

a) ASTM C33 physical properties

b) ASR testing reports for each aggregate source.

2) Mixing water: ASTM C1602.

d. Submittal of certifications and test reports shall not relieve Contractor of responsibility for furnishing materials meeting specified requirements.

5. Name and manufacturer of any proposed finishing aid.

a. Include data sheet and manufacturer's application instructions.

C. RSN 03 30 00-2, Concrete Placement Schedule:

1. Complete, detailed concrete placement schedule showing Contractor's plan for individual placements including placement of reinforcement and embedded items.

2. Detail as necessary to show location, sequence, and date of concrete placements scheduled for each item of concrete work.

3. Show submittal schedule for placement and reinforcement drawings.

D. RSN 03 30 00-3, Certifications:

1. NRMCA Certification of Production Facilities. NRMCA certification shall be current and include automatic digital recording of cementitious materials, aggregate, water, and chemical admixtures. NRMCA certification shall be maintained throughout duration of project.

2. ACI Aggregate Testing Technician certification(s).

3. ACI Concrete Field-Testing Technician certification(s).

4. ACI Concrete Strength Testing Technician certification(s).

E. RSN 03 30 00-4, Test Reports:

1. Aggregate test results as required by Table 03 30 00B – Batch Plant Testing.

2. Concrete test reports as required by Table 03 30 00E – Field Testing.

1.06 QUALIFICATIONS

A. Ready mix plant: Currently certified by NRMCA. NRMCA certification shall include automatic digital recording of cementitious materials, aggregate, water, and chemical admixtures. NRMCA certification shall be maintained throughout duration of project.

B. ACI Aggregate Testing Technician: Currently certified ACI Aggregate Testing Technician - Level 1.

C. Flatwork foreman with at least 5 years of experience with similar type placements.

D. ACI Concrete Field-Testing Technician: Currently certified ACI Concrete Field-Testing Technician - Grade I.

E. ACI Strength Testing Technician: Currently certified ACI Strength Testing Technician.

1.07 DELIVERY, STORAGE, AND HANDLING

A. Furnish legible and digitized batch ticket with each batch of concrete in accordance with ASTM C94. Deliver ticket to COR at jobsite during batch delivery.

B. Sponge rubber joint filler storage:

1. Store in protected area at temperature of 70 degrees F (21 degrees C) or less.
2. Do not expose to direct sun.

C. Synthetic Fiber Reinforcement:

1. Store in clean, dry, cool area indoors in accordance with manufacturer's instructions
2. Do not store synthetic fiber reinforcement in direct sunlight.
3. Keep packaging sealed until ready for use.

1.08 PRE-PLACING MEETING

A. At least 14 days before first concrete placement meet with COR for pre-placement meeting.

B. Coordinate time and place of meeting with COR at least 14 days before meeting.

C. Contractor attendees shall be at least the following:

1. Contractor onsite supervisor.
2. Concrete forming, placing, and finishing onsite supervisor(s); Contractor or subcontractor(s) employee as applicable.
3. Technical specialist from ready-mix supplier.
4. Concrete pump subcontractor onsite supervisor, if applicable.
5. Testing agency project manager, onsite supervisor(s) and lead technician.

PART 2 PRODUCTS

2.01 CEMENTITIOUS MATERIALS

A. Portland cement:

1. ASTM C150, Type V:
   a. Meet equivalent alkalies ($Na_2O + 0.658K_2O$) of 0.60% maximum:
      1) Low-alkali limitation for Portland cement may be waived when tests of concrete aggregate source show that low-alkali cement is

not required for ASR mitigation. See Concrete Aggregate Materials article (2.03).

b. Meet early stiffening requirements of ASTM C150 - Table 4.

B. Blended hydraulic cement:

1. ASTM C595, Type IL (HS), IS (HS) or IP (HS).

2. Meet equivalent alkalies (Na2O + 0.658K2O) of 0.60 percent maximum. Meet equivalent alkali's requirement of ASTM C595, Table 2, Option G or Table 3

C. SCM:

1. Pozzolan:

a. ASTM C618, Class F or N:

1) Except:

a) Sulfur trioxide, maximum: 4.0 percent.

b) Loss on ignition, maximum: 2.5 percent (Class F) or 3.0 percent (Class N)..

2) In addition:

a) Calcium oxide, maximum: 8.0 percent.

b) Pozzolan "R" factor less than 2.5. Pozzolan with this "R" factor shall not decrease sulfate resistance of concrete:

i. R: (C-5)/F

ii. C: Calcium oxide content of pozzolan in percent determined in accordance with ASTM C114.

iii. F: Ferric oxide content of pozzolan in percent determined in accordance with ASTM C114.

2. Slag Cement:

a. ASTM C989, Grade 100 or 120.

2.02 WATER

A. ASTM C1602, including optional requirements of Table 2.

2.03 AGGREGATE MATERIALS

A. Fine aggregate: ASTM C33:

1. Percent material passing No. 200 sieve: Less than 3 percent.

B. Coarse aggregate: ASTM C33, Class 4S, Size No. specified in Table 03 30 00A – Concrete Mixes.

C. Alkali Silica Reaction (ASR):

1. Test fine and coarse aggregates in accordance with ASTM C1260 for potential deleterious ASR:

   a. For ASTM C1260, and other tests when required, continue readings for 28 days after zero readings.

   b. Acceptance criteria specified below are based on 28-day readings after zero readings.

   c. Expansion is no greater than 0.10 percent: Aggregates are acceptable.

   d. Expansion is greater than 0.10 percent:

      1) Test aggregates according to ASTM C1567 using components (e.g. coarse aggregate, fine aggregate, cementitious materials, and ASR inhibiting admixtures) in proportions proposed for mixture design. Continue readings for 28 days:

         a) For mixes using lithium admixtures use test procedure USACE CRD-C 662.

         b) Expansion of proposed mixture design test specimens, tested in accordance with ASTM C1567 does not exceed 0.10 percent:

            i. Aggregates are acceptable.

         c) Expansion of proposed mixture design test specimens is greater than 0.10 percent:

            i. Aggregates are not acceptable unless adjustments to mixture design can reduce expansion to less than 0.10 percent or testing by ASTM C1293 indicates aggregates will not experience deleterious expansion.

      2) Use tested materials. Materials may be rejected if they do not match tested materials.

2. ASTM C1293 test results may be substituted for ASTM C1260 test results:

   a. Average ASTM C1293 concrete prism expansion less than 0.04 percent at one year: Aggregates acceptable.

D. Appropriate for use in accordance with ASTM C295.

2.04 ADMIXTURES

A. Air-entraining admixture: ASTM C260.

B. Chemical admixtures:

1. Do not use chemical admixtures which contain more than 0.1 percent chloride, by weight.
2. Admixtures shall be compatible with each other.
3. Allowable chemical admixtures:
   a. ASTM C494, Type A, D, F, G, or S.
   b. ASTM C494, Type C and E, provided they do not contain chlorides.

C. Specialized chemical admixtures:

1. When batch plant has not previously used a specialized chemical admixture, admixture manufacturer shall provide on-site representative to assist with mix design and to train batch plant personnel in dispensing and mixing operations.
2. Do not use specialized chemical admixtures which contain more than 0.1 percent chloride, by weight.
3. Alkali Silica Reaction (ASR) Inhibiting Admixture:
   a. Lithium Nitrate Admixture for ASR mitigation of reactive aggregates having the following characteristics:
      1) Meets NSF/ANSI 61.
      2) Nominal 30 percent aqueous solution of Lithium Nitrate:
         a) Density: 10 pounds/gallon (1.2 kg/L).
         b) Approximate chemical constituents (percent by mass):
            i. LiNo3 (Lithium Nitrate): 30 plus or minus 0.5.
            ii. SO4-2 (Sulfate Ion), maximum: 0.1.
            iii. Cl- (Chloride Ion), maximum: 0.2.
            iv. NA+ (Sodium Ion), maximum: 0.1.
            v. K+ (Potassium Ion), maximum: 0.1.
   b. Coordinate with manufacturer regarding Lithium Nitrate dosage.
   c. Do not use Lithium Nitrate Admixture for concrete in continuous or nearly continuous contact with water.
4. Extended set control admixture:
   a. MasterSet Delvo hydration controlling admixture manufactured by Master Builders Solutions. https://www.master-builders-solutions.com/en-us; or equal, with the following essential characteristics:
      1) Meets ASTM C494, Type B.
      2) Retards setting.
      3) Does not reduce concrete strength.
   b. Use within manufacturer's time limits.

c. Include admixture on batch ticket.

d. Admixture quantity required to stabilize concrete shall be pre-determined using jobsite materials. Initial concrete setting time shall be monitored and adjusted during project by qualified concrete technician.

2.05 MACRO SYNTHETIC FIBER REINFORCEMENT

A. Strux 90/40 manufactured by GCP Applied Technologies, 62 Whittemore Avenue, Cambridge, MA 02140; or equal, having the following essential characteristics:

1. In accordance with ASTM C1116 Type III.

B. Length: 1 1/2-inch minimum to 2-inch maximum.

2.06 CURING MATERIALS

A. Water: ASTM C1602, including optional requirements of Table 2.

B. Curing compound: ASTM C309:

1. Capable of meeting moisture retention at manufacturer's application rate.
2. Meet Federal, State, Tribal and local regulations for VOCs.

C. Sheet materials:

1. Polyethylene film: ASTM C171, white opaque.
2. White burlap-polyethylene sheeting: ASTM C171.

2.07 ACCESSORIES

A. Sponge Rubber Joint Filler:

1. ASTM D1752, Type I, except:

a. Test specimen compression load: 50 to 150 pounds per square inch.

2. Joint filler adhesive: Non-bituminous adhesive recommended by filler manufacturer.

B. Bituminous Joint Filler: ASTM D1751.

C. Elastomeric Sealant: ASTM C920, polyurethane, Use M, Grade NS, Class 25.

D. Evaporation Control:

1. MasterKure ER 50 manufactured by Master Builders Solutions. https://www.master-builders-solutions.com/en-us; or equal having the following essential characteristics:

a. Monomolecular film forming compound applied to exposed concrete slab surfaces for temporary protection from rapid moisture loss.

b. For application after finishing and prior to applying curing compound.

c. For use when the evaporation rate is high.

2. Do not use as finishing aid.

2.08 MIX

A. Contractor shall design and adjust concrete mix:

1. Government reserves the right to adjust mix proportions when need for adjustment is indicated by results of materials testing:

a. When required, adjustment of mix proportions by Government will be in accordance with Concrete Manual.

B. Cementitious materials options:

1. Specified Portland cement plus specified pozzolan by percent weight specified in Table 03 030 00A – Concrete Mixes.

2. Specified Portland cement plus specified slag cement by percent weight specified in Table 03 03 00A – Concrete Mixes.

3. Blended Hydraulic: ASTM C595 provided, specified Portland cement with percent of specified pozzolan or specified slag cement specified in Table 03 30 00A – Concrete Mixes.

C. Design concrete mixes in accordance with Table 03 30 00A – Concrete Mixes. General concrete mix shall be used for concrete unless otherwise specified:

1. Net water-cementitious materials ratio (w/c) is maximum, by weight. Cementitious material weight is cement plus SCM.

2. Slump at point of placement: In accordance with ASTM C143.

3. Air Entrainment: Percent air by volume of concrete as discharged at point of placement, in accordance with ASTM C231.

Table 03 30 00A – Concrete Mixes

Mix No	Feature	f'c (psi)	Max w/c*	NMSA**	Percent SCM*** A: Class F Pozzolan B: Slag Cement	Slump (inches)	Air Content (percent)	Notes
1	Non-insulated Foundations, Structural Concrete Pipe Encasement/ Thrust Blocks and General Concrete	4500 at 28-days	0.45	57, 67	A: 20 ±5	2 to 4	4.5 to 7.5	1, 2
2	Interior Slab on Grade and insulated foundations	4500 at 28-days	0.45	57, 67	A: 20 ±5	2 to 4	Non-Air Entrained	1, 2
3	Fiber Reinforced Concrete Pan Ditch	4500 at 28-days	0.45	57, 67	A: 20 ±5	2 to 4	4.5 to 7.5	1, 2, 3

*Maximum water/cementitious materials ratio.
**Nominal Maximum Size Aggregate.
***SCM as percent of total cementitious material, by weight.
NOTES:

1. Ternary blended cementitious materials which meet the specifications may be submitted for approval.
2. Concrete with, ASTM C494 Type F high-range water-reducing admixtures, or Type G high-range water-reducing and retarding admixtures:
   a. Admixture shall be incorporated into trial batch or historical data.
   b. Use slump appropriate for placing conditions.

c. On-Site additions of high-range water reducers to be done by concrete supplier's QC personnel only.3. Synthetic fiber reinforced concrete dosage rate: Minimum 5 lb/yd3. See paragraph 2.05 MACRO SYNTHETIC FIBER REINFORCEMENT.

D. Submit design mixes for each type and strength of concrete substantiated by either laboratory trial batch or field performance methods as specified in ACI 301. For trial batch method, mix shall be proportioned and stamped by a professional engineer.

E. Concrete trial mixes:

1. Average compressive strength of trial batch cylinders at design age: Design strength plus 1,200 pounds per square inch for concrete between 3,000 and 5,000 psi.
2. Admixtures to be used in mix shall be incorporated into mix design submitted for approval.
3. Air content: Within 1 percent of top of specified range.
4. Slump: Within 1-inch of top of specified range.

2.09 BATCHING, MIXING, AND TRANSPORTING

A. Batch plant: Currently NRMCA certified with automatic digital recording of cementitious materials, aggregate, water, and chemical admixtures.

B. Manufacture and deliver in accordance with ASTM C94 and ACI 304R:

1. Prepare batch ticket in accordance with ASTM C94 for every batch of concrete.
   a. Synthetic fiber reinforcement dosage shall be included on batch ticket.

C. Synthetic fiber reinforcement: Add synthetic fiber reinforcement to concrete mixture in accordance with manufacturer's instructions.

D. Cold weather: When air temperature has fallen to or is expected to fall below 40 degrees F, prepare ingredients, and mix in accordance with ACI 306.1:

1. Do not use frozen materials or materials containing ice or snow.
2. Uniformly heat water and aggregates before mixing to obtain concrete mixture temperature of not less than 50 degrees.

E. Hot Weather: When precautions are necessary, prepare ingredients and mix in accordance with ACI 305.1:

1. Cool ingredients before mixing to maintain specified maximum concrete temperature at time of placement.
2. Mixing water may be chilled or chopped ice may be used to control temperature, provided water equivalent of ice is calculated to total amount of mixing water. Ice replacing batch water shall be melted prior to discharge.
3. Using liquid nitrogen to cool concrete is Contractor's option.

F. Prevent appreciable segregation of ingredients.

G. Place concrete within 90-minutes from introduction of cement to water or aggregates:

1. For placing times exceeding 90-minutes, extended set control admixtures may be used when approved by COR.

2.10 CONCRETE TEMPERATURE

A. Concrete temperature at placing:

1. 50 to 85 degrees F (10 to 29 degrees C).

2.11 CONTRACTOR SOURCE QUALITY TESTING

A. Perform sampling, testing, and reporting as required in Table 03 30 00B – Batch Plant Testing:

1. Independent testing agency shall meet requirements specified in Section 01 46 20 – Testing Agency Services.
2. Personnel conducting tests: Qualified as ACI Aggregate Testing Technician, Level 1; or equal.

B. Perform tests at least as often as frequencies specified in Table 03 30 00B – Batch Plant Testing.

C. Notify COR immediately of test results showing failure of materials to meet specifications. Provide passing test to COR within 24 hours. Submit reports of test results as specified.

2.12 BATCH PLANT TESTING

Table 03 30 00B – Batch Plant Testing

TESTS OF	TEST STANDARD	STANDARD TITLE	REQUIREMENT	TESTING FREQUENCY
Aggregate Gradation	ASTM C136	Sieve Analysis of Fine and Coarse Aggregates	Fine and Coarse Aggregate meets sizing requirements per ASTM C33.	At beginning of placing each mix. At change in mix design. At least every 500 yd3 of placing a mix.
Aggregate Fines content	ASTM C117	Materials Finer than 75-µm (No. 200) Sieve in Mineral Aggregates by Washing	Fine aggregate meet specified allowable fines content (material passing No. 200 sieve)	At beginning of placing each mix. At change in mix design. At least every 500 yd3 of placing a mix.

Table 03 30 00B – Batch Plant Testing

TESTS OF	TEST STANDARD	STANDARD TITLE	REQUIREMENT	TESTING FREQUENCY
Aggregate moisture content	ASTM C566	Total Evaporable Moisture Content of Aggregate by Drying	Verify that moisture meter at batch plant is accurate with the material batched.	At beginning of placing each mix. At change in mix design. At least every 500 yd3 of placing a mix.

PART 3 EXECUTION

3.01 PREPARATION

A. Remove standing water, mud, and debris from foundation surfaces to be covered by concrete.

B. Prepare rock surfaces free from oil, objectionable coatings, and loose, semidetached, and unsound fragments. Immediately before placement of concrete, wash rock surfaces with air-water jet and dry to uniform surface-dry condition.

C. Prepare earth foundations free from frost or ice.

D. Thoroughly moisten surfaces of absorptive foundations to be covered with concrete so that moisture will not be drawn from fresh concrete. Keep subgrade moisture uniform without puddles or dry areas.

E. Clean, roughen, and surface dry surfaces of construction joints to be covered with fresh concrete:

1. Remove laitance, loose or defective concrete, coatings, and sand, curing compound, and other foreign material no more than 48 hours prior to placing concrete.
2. Sandblast, steel shotblast, or high-pressure water jet surfaces, or use other method approved by COR to create a surface equivalent to or larger than CSP 5 in accordance with ICRI 310.2.
3. Wash surface thoroughly, and surface dry immediately before placement of adjoining concrete.

3.02 PLACING

A. Notify COR at least 24 hours before placing concrete.

B. Provide placement checkout cards in a watertight container. COR will approve placement card format:

1. Sign each line-item indication work is completed in accordance with specifications.
2. Obtain COR signature after each line item.
3. Do not place concrete without required signatures.
4. Use of placement checkout cards shall be required by COR.
5. Placement card shall be stored in a watertight container located at the placement area.

C. Do not place concrete without approval of COR.

D. Place concrete in presence of COR.

E. Perform concrete placing under the direct supervision of a qualified flatwork foreman for placements.

F. Allow at least 7 days between adjacent placements, or as approved by COR.

G. Do not use aluminum pipes and chutes for placing or pumping concrete.

H. Adding water to concrete batch at site will be allowed only once and only when approved by the COR:

1. Add additional water before concrete is discharged.
2. Do not exceed specified water to cement ratio.
3. After water is added, concrete shall be mixed for at least 30 revolutions of mixer drum at mixing speed.
4. Record added water on batch ticket to nearest gallon.

I. Adding air entraining admixtures to concrete batch at site will be allowed only once when approved by COR:

1. After air entraining admixture is added, concrete shall be mixed for minimum of 30 revolutions of mixer drum at mixing speed.
2. Take slump and air content after air-entraining admixture addition and additional revolutions.
3. Record added air entraining admixture on batch ticket to nearest ounce.

J. Adding high range water reducer to concrete batch at site shall only be performed by concrete supplier’s technical specialist.

1. After high range water reducer admixture is added, concrete shall be mixed for minimum of 30 revolutions of mixer drum at mixing speed.

2. Take slump and air content after high range water reducer addition and additional revolutions.

3. Record added high range water reducer admixture on batch ticket to nearest ounce.

K. Furnish legible and digitized batch ticket with each batch of concrete in accordance with ASTM C94. Ticket shall include additions made to the load after batching (water, air adjustment, admixtures). Deliver ticket to COR at jobsite during batch delivery.

L. Do not use concrete which has become so stiff that concrete cannot be properly placed.

M. Place formed concrete in continuous, approximately horizontal layers. Do not exceed 20 inches in depth of layers.

N. Concrete shall not be allowed to freefall more than 4 feet.

O. Vibrate concrete until concrete has been consolidated to maximum practical density, is free from pockets of coarse aggregate, and closes snugly against surfaces of forms and embedded materials.

P. Hot Weather:

1. Place concrete in accordance with ACI 305.1.

2. Protect reinforcing steel so that steel temperature does not exceed ambient air temperature immediately before placing concrete.

3. Fog spray forms, reinforcing steel, and subgrade just before placing concrete. Keep subgrade moisture uniform without puddles or dry areas.

Q. Cold weather:

1. Place concrete in accordance with ACI 306.1.

2. Do not place concrete on frozen subgrade or subgrade containing frozen materials.

3.03 FINISHING

A. Notify COR before finishing concrete.

B. Finish concrete in presence of Government inspector unless inspection is waived in each specific case:

1. Perform placement finishing under the direct supervision of qualified flatwork foreman.

C. Finish surfaces as specified in Table 03 30 00F - Formed Surfaces and Table 03 30 00G – Unformed Surfaces.

D. Where finishes are not specified or shown on drawings for particular surface, finish concrete as specified for similar work.

E. Formed surfaces:

1. Finish class is designated by symbols F1, F2.

2. Finish F1:

a. Applies to formed surfaces to be covered by fill material, grout, or concrete, and construction joint surfaces as specified in Table 03 30 00F – Formed Surfaces.

b. Protect form tie rod ends on surfaces in contact with fill material from moisture where they will be below water table or waterline:

1) Recess tie rod ends and fill recess with dry pack or other material approved by COR.

c. Cut off flush with formed surface form tie rod ends on surfaces in contact with concrete or fill material and above maximum water table or waterline elevation.

3. Finish F2:

a. Applies to exposed formed surfaces not permanently concealed by fill material, grout, or concrete, and to contraction joint surfaces and expansion joint surfaces as specified in:

1) Recess tie rod ends and fill recess with dry pack or other material approved by COR.

F. Unformed surfaces:

1. Do not use dry Portland cement or additional water during finishing.

2. Do not use “jitterbugs” or other tools to force coarse aggregate away from surface.

3. Finish class is designated by symbols U1, U2, U3 or broom finish.

4. Finish U1 (Screeded Finish):

a. Applies to unformed surfaces to be covered by fill material, grout, or concrete as specified in Table 03 30 00G – Unformed Surfaces.

b. Use as first stage of finish U2.

c. After concrete is placed and consolidated, strike off and level concrete to produce even uniform surface.

5. Finish U2 (Floated Finish):

a. Applies to unformed surfaces not permanently concealed by fill material, grout, or concrete, as specified in Table 03 30 00G – Unformed Surfaces.

b. Begin floating as soon as screeded surface has sufficiently stiffened and bleed water sheen has disappeared.

c. Use hand- or power-driven equipment.

d. Finish surface with minimum floating necessary to produce surface that is free of screed marks and is uniform in texture.

e. Use as second stage of finish U3. Floating shall bring a small amount of mortar without excess water to the surface, to permit effective troweling.

6. Finish U3 (troweled finish):

a. Applies to unformed surfaces where appearance and porosity is considered by Government to be of special importance as specified in Table 03 30 00G – Unformed Surfaces.

b. Begin steel troweling after bleed water has disappeared and floated surface has sufficiently hardened to prevent an excess of fine material from being drawn to surface.

c. Trowel with firm pressure to flatten sandy texture of floated surface.

d. Trowel to a dense uniform surface free from blemishes and trowel marks. Do not excessively trowel surface.

7. Broomed finish:

a. Apply broom finish immediately after concrete receives U2 finish.

b. Edge transverse joints before brooming.

c. Produce a scored surface by brooming with fiber-bristle brush in direction transverse to that of traffic with adjacent strokes slightly overlapping.

d. Finished surface shall have uniform appearance and be free of abrupt corrugation exceeding 1/8 inch in depth.

e. Brooming shall eliminate flat surface left by the surface face of the edger.

8. Slope interior surfaces for drainage where shown on drawings or as directed by COR. Slope surfaces exposed to weather for drainage as directed by COR.

9. Slope narrow surfaces, such as tops of walls and curbs, approximately 3/8-inch per foot of width, unless use of other slopes or level surface is indicated on drawings or is directed by COR.

10. Slope broader surfaces, such as walks, platform, and decks; approximately 1/4-inch per foot unless use of other slopes or level surfaces is indicated on drawings or is directed by COR.

3.04 JOINTS AND EDGES

A. Construction Joints (CJ):

1. Construction joints are joints which are purposely placed in concrete to facilitate construction, reduce initial shrinkage stresses and cracks, allow time for

installation of embedded metalwork, or allow for subsequent placing of other concrete.

2. Bond is required at construction joints regardless of whether or not reinforcement is continuous across joint.

3. Locate construction joints where shown on drawings. Relocation, addition, or elimination of construction joints will be subject to approval by COR.

4. Clean, roughen, and surface dry surfaces of construction joints to be covered with fresh concrete. See Preparation article.

5. Do not use a mortar layer on construction joints.

B. Control Joints (Ct.J):

1. Control joints are joints placed in concrete to provide for control of initial shrinkage stresses and cracks of monolithic units.

2. Construct control joints so no bond exists between concrete surfaces forming the joint:

   a. Construct control joints by placing concrete on one side of joint and allowing it to set before concrete is placed on other side of joint.

   b. Coat surface of concrete first placed at control joint with curing compound that prevents bond before placing concrete on other side of joint.

3. Reinforcement is continuous across tooled or saw cut control joints.

C. Partial Contraction Joints, (Partial Cr. J):

1. Construct partial contraction joints so no bond exists between concrete surfaces forming the joint:

   a. Construct partial contraction joints by placing concrete on one side of joint and allowing it to set before concrete is placed on other side of joint.

   b. Coat surface of concrete first placed at partial contraction joint with curing compound that prevents bond before placing concrete on other side of joint.

2. At partial contraction joints, discontinue every other reinforcement bar perpendicular to the joint, i.e., 1/2 of perpendicular reinforcement shall cross the joint. End discontinued bars 2 inches from face of joint.

D. Contraction Joints (Cr.J):

1. Contraction joints are joints placed in concrete to provide for volumetric shrinkage of a monolithic unit or movement between monolithic units.

2. Construct contraction joints so no bond exists between concrete surfaces forming the joint:

   a. Construct contraction joints by placing concrete on one side of joint and allowing it to set before concrete is placed on other side of joint.

b. Coat surface of concrete first placed at contraction joint with curing compound that prevents bond before placing concrete on other side of joint.

3. Except as provided for dowels, reinforcement is not continuous across a contraction joint.

E. Expansion joints (EJ):

1. Cut sponge rubber joint filler to size and shape of joint surface to receive filler.
2. Adhere filler to concrete in accordance with adhesive manufacturer's recommendations.
3. Butt sections of filler with tight-fitting butt joints to prevent mortar from seeping through joint.

F. Expansion Joints (EJ):

1. Form joint in concrete.
2. Fill joint with bituminous joint filler.
3. Butt sections of filler with tight-fitting butt joints.

G. Preformed joints consisting of plastic or metal strips not allowed.

3.05 STRUCTURAL DEVIATIONS AND SURFACE TOLERANCES

A. Structural deviations are defined as allowable variations from specified lines, grades, and dimensions.

B. Surface tolerances are defined as maximum allowable magnitude of surface irregularities.

C. Specified structural deviations and surface tolerances are consistent with modern construction practice and governed by effects that permissible variations may have upon a structure. COR reserves the right to diminish specified structural deviations and surface tolerances where such variations impair structural action, operational function, or architectural appearance of a structure or portion of structure.

D. Construct concrete within stated variations even though more than one may be specified:

1. Specified variation for one element of a structure will not apply when it will permit another element of same structure to exceed its allowable variation.
2. Where variations are not specified or shown on drawings for a particular structure, variations shall be those specified for similar work. As an exception to clause at FAR 52.236-21 “Specifications and Drawings for Construction”, specific tolerances shown on drawings in connection with dimension shall govern.

E. Structural Deviations:

1. Check variations from specified lines, grades, and dimensions in hardened concrete to determine that structures are within tolerances specified in Table – 03 30 00C – Deviations from Specified Lines, Grades, and Dimensions.
2. Variation is distance between actual position of structure or element of structure and specified position in plan for structure or particular element:
   a. Plus, or minus variations indicate a permitted actual position up or down and in or out from specified position in plan.
   b. Variations not designated as plus or minus indicate maximum deviation permitted between designated successive points on completed element of construction.
3. Specified position in plan is defined as lines, grades, and dimensions described in this section, shown on drawings, or prescribed by COR.

Table 03 30 00C – Deviations from Specified Lines, Grades, and Dimensions

A. PUMPING PLANT STRUCTURES AND OTHER BUILDINGS		
1.	Footings:	
	(a) Variation in length and width dimensions from those specified	-1/2 inch +2 inches
	(b) Horizontal misplacement or eccentricity:.....	2 percent of footing width in direction of misplacement, but not more than 2 inches
	(c) Reduction in thickness.....	5 percent of specified thickness

Table 03 30 00C – Deviations from Specified Lines, Grades, and Dimensions

2.	Variation of horizontal dimensions at all floor and roof levels from specified position in plan:		
	(a)	Overall building dimensions	±1/2 inch per 100-foot length with maximum for entire length of ±1 inch
	(b)	Overall bay dimensions limited by (c)below, but not to exceed.....	±3/8 inch
	(c)	Intermediate dimensions for column, wall, and partition locations:	
		For dimensions less than 10-feet	±1/4 inch
		For dimensions equal to or greater than 10-feet but less than 20-feet.....	±3/8 inch
		For dimensions 20-feet or more	±1/2 inch
3.	Variation of vertical dimensions from specified position in plan:		
	(a)	Overall building dimensions	±1/2 inch
	(b)	Overall story height limited by (c)below, but not to exceed.....	±3/8 inch
	(c)	Intermediate dimensions:	
		Less than 10 feet.....	±1/4 inch
		10 to 20 feet, inclusive	±3/8 inch
		20 feet or more	±1/2 inch
4.	Variation from plumb or specified batter for lines and surfaces of columns, piers, walls, and for arrises:		
	(a)	When overall height of line or surface is:	
		Less than 10 feet.....	±1/4 inch
		10 to 20 feet, inclusive	±3/8 inch
		More than 20 feet, but less than 40 feet	±1/2 inch
		40 feet or more	±1 inch
	(b)	For any two successive intermediate points on the line or surface separated by:	
		10 to 20 feet, inclusive	1/4 inch
		More than 20 feet	3/8 inch

Table 03 30 00C – Deviations from Specified Lines, Grades, and Dimensions

5.	Variation from plumb for lines and surfaces of corner columns, control joint grooves, and other conspicuous lines:	
	(a) When overall height of line or surface is:	
	Less than 10 feet	±1/4 inch
	10 to 20 feet, inclusive	±3/8 inch
	More than 20 feet	±1/2 inch
	(b) For any two successive intermediate points on the line or surface separated by:	
	10 to 20 feet, inclusive	1/4 inch
	More than 20 feet	3/8 inch
6.	Variation from level or established grades for floors, roof decks, ceilings, beam soffits, and arrises:	
	(a) When overall length of line or surface is:	
	Less than 10 feet	±1/4 inch
	10 to 20 feet, inclusive	±3/8 inch
	More than 20 feet, but less than 40 feet	±1/2 inch
	40 feet or more	±3/4 inch
	(b) For any two successive intermediate points on the line or surface separated by:	
	10 to 20 feet, inclusive	1/4 inch
	More than 20 feet	3/8 inch
7.	Variation from level or specified grades for exposed lintels, sills, parapets, horizontal grooves, and other conspicuous lines:	
	(a) When overall length of line or surface is:	
	Less than 10 feet	±1/4 inch
	10 to 20 feet, inclusive	±3/8 inch
	More than 20 feet	±1/2 inch
	(b) For any two successive intermediate points on the line or surface separated by:	
	10 to 20 feet, inclusive	1/4 inch
	More than 20 feet	3/8 inch
8.	Variation in location from specified position in plan of sleeves and wall openings	±1/2 inch
9.	Variation in sizes from those specified for sleeves, floor openings, and wall openings, except wall openings for swinging doors	±1/4 inch

Table 03 30 00C – Deviations from Specified Lines, Grades, and Dimensions

10.	Variation in sizes from those specified for wall openings for swinging doors	-0 inch +1/4 inch
11.	Variation in cross-sectional dimensions from those specified for columns and beams and in thicknesses from those specified for slabs and walls	-1/4 inch +1/2 inch
12.	Variation in rise and tread of steps from that specified:	
	(a) Flight of stairs:	
	Rise	±1/8 inch
	Tread	±1/4 inch
	(b) Consecutive steps:	
	Rise	1/16 inch
	Tread	1/8 inch
B. PIPELINE STRUCTURES		
1.	Thrust Blocks, Collars, Anchor Blocks and Miscellaneous Slabs:	
	(a) Departure from established alignment	±2-inches
	(b) Departure from established profile grade.....	±2-inches
	(c) Variation from specified thickness.....	-2.5 percent of specified thickness or -1/4-inch, whichever is greater; or +5 percent of specified thickness or +1/2-inch, whichever is greater
	(d) Variation from specified inside dimensions.....	±0.5 percent of inside dimensions
2.	Pre-Cast Structures:	
	(a) Departure from established alignment	±1 inch
	(b) Departure from established profile grade.....	±1 inch

Table 03 30 00C – Deviations from Specified Lines, Grades, and Dimensions

(c) Variation from plumb or specified batter for lines and surfaces:	
(1) When overall length of line or surface is:	
Less than 10 feet.....	Exposed: ± 3/8-inch Buried: ±3/4-inch
10 feet or more	Exposed: ±1/2-inch Buried: plus, or minus 1-inch
(2) For any 2 successive intermediate points on the line or surface separated by:	
10 to 20 feet, inclusive	Exposed: 3/8-inch Buried: 3/4-inch
More than 20 feet	Exposed: 1/2-inch Buried: 1-inch
3. Variation from plumb of pipe erected vertically in any length of 10 feet.....	±1/2-inch

F. Surface Irregularities:

1. Bulges, depressions, and offsets are defined as surface irregularities or roughness.
2. Surface irregularities are classified as “abrupt” or “gradual” and allowable tolerances are specified in Table 03 30 00D – Surface Tolerances:
   a. A surface tolerance is designated by a capital “T” followed by a number 1 through 5.
   b. Surface tolerance designations are separate from surface finishes and structural deviations.
3. Abrupt surface irregularities:
   a. Abrupt surface irregularities are defined as offsets such as those caused by misplaced or loose forms in which maximum dimension of irregularity perpendicular to surface is greater than maximum dimension of irregularity in plane of surface.

b. Abrupt surface irregularities include isolated surface irregularities which exceed specified gradual irregularities.

4. Gradual surface irregularities:

a. Gradual surface irregularities are defined as bulges and depressions resulting in gradual changes on surface.

b. Gradual surface irregularities are further defined as isolated undulations on surface. Maximum dimension of undulation perpendicular to surface is small relative to maximum dimension of undulation in plane of surface.

5. Check magnitude of surface irregularities of formwork and finished surfaces to ensure that surfaces are within specified tolerances.

G. Surface Tolerances:

Table 03 30 00D – Surface Tolerances

Concrete surface	Maximum allowable surface irregularity tolerance	
	Abrupt	Gradual
T1	1 inch	1/4-inch per inch
T2	1/2 inch	1/8-inch per inch
T3	1/4 inch	1/16-inch per inch
T4	1/8 inch	1/32-inch per inch
T5	1/32 inch	1/120-inch per inch

H. Repair of hardened concrete not within specified tolerances:

1. Repair hardened concrete which is not within specified tolerances to bring it within those tolerances.

2. Perform repair after consultation with Government inspector regarding method of repair. Notify COR as to time when repair will be performed.

3. Repair concrete which will be exposed to view in manner which will result in concrete surface with uniform appearance:

a. When grinding surfaces exposed to view, limit depth of grinding such that no aggregate particles are exposed more than 1/16 inch in cross section at finished surface.

b. Where grinding has caused or will cause exposure of aggregate particles greater than 1/16 inch in cross section at finished surface, repair concrete by excavating and replacing concrete.

I. Field verification of surface tolerances:

1. Determine compliance of surface with specified surface tolerances.

2. Evaluate surface roughness:

a. Measure roughness height or depth and check for compliance with values specified in Table 03 30 00D – Surface Tolerances and Table 03 30 00C – Deviations from Specified Lines, Grades, and Dimensions.

b. When measured height or depth of roughness is less than value in abrupt tolerance specification and height or depth of roughness does not cause structure to exceed applicable value specified in Table 03 30 00C – Deviations from Specified Lines, Grades, and Dimensions, surface roughness is acceptable.

c. When roughness height or depth exceeds abrupt tolerance specification, determine roughness slope for comparison to gradual tolerance specification:

1) Measure roughness length and determine roughness slope by dividing roughness height or depth by roughness length (See Figure 1).

2) When roughness slope is greater than slope specified by gradual tolerance specification, surface roughness is unacceptable.

3) When roughness slope is less than gradual slope specified and gradual roughness does not cause structure to exceed allowable structural deviations, surface roughness is acceptable.

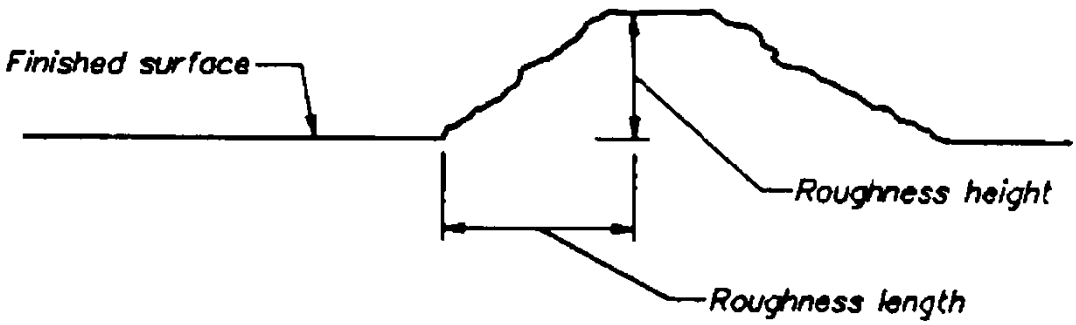

$$\text{Roughness slope ratio} = \frac{\text{Roughness height}}{\text{Roughness length}}$$

CASE 1 = Offset on the Surface

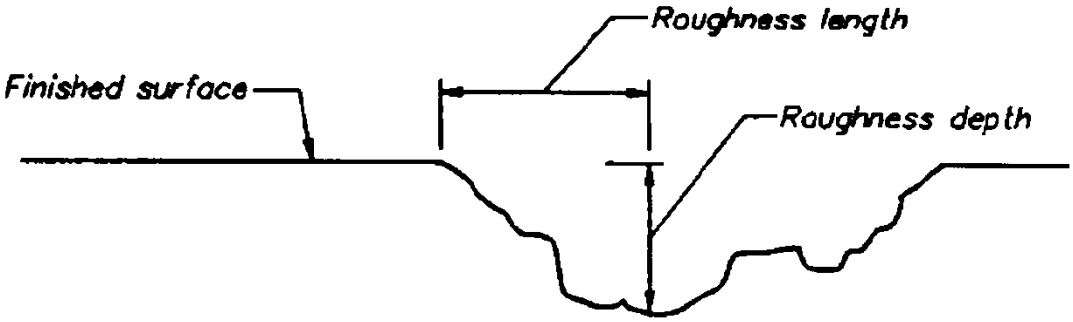

$$\text{Roughness slope ratio} = \frac{\text{Roughness depth}}{\text{Roughness length}}$$

CASE 2 = Offset into the Surface

FIGURE 1

J. Measuring surface roughness:

1. Examples below illustrate how to make necessary surface measurements for typical roughness.

2. Case 1 - Roughness Protruding above Surface:

   a. Measure roughness protruding above surface with straightedge that is at least 20 times longer than roughness height being measured.

   b. Position straightedge with one end resting on top of roughness, as shown in Figure 2 (Case 1).

   c. Determine roughness height by measuring maximum gap that occurs normal to straight edge.

   d. Note position on the straightedge from which normal distance is measured.

   e. To determine roughness length, measure distance along straightedge from point where the height was measured to point of contact between straightedge and top of roughness.

   f. Roughness slope is defined as ratio of roughness height to roughness length.

   g. As roughness is seldom symmetric, moving position of straightedge about roughness may be necessary to locate point where maximum height and slope exists.

3. Case 2 - Roughness Extending below the Surface:

   a. A roughness occurring as an indentation to surface is measured by placing straightedge across indentation, as shown in Figure 2 (case 2).

   b. Measure maximum gap between straightedge and surface and note location of measurement on straightedge.

   c. From point of depth measurement, measure along straightedge in both directions to point of contact with surface.

   d. Use shortest length measured as roughness length.

   e. Divide roughness depth by roughness length to determine roughness slope.

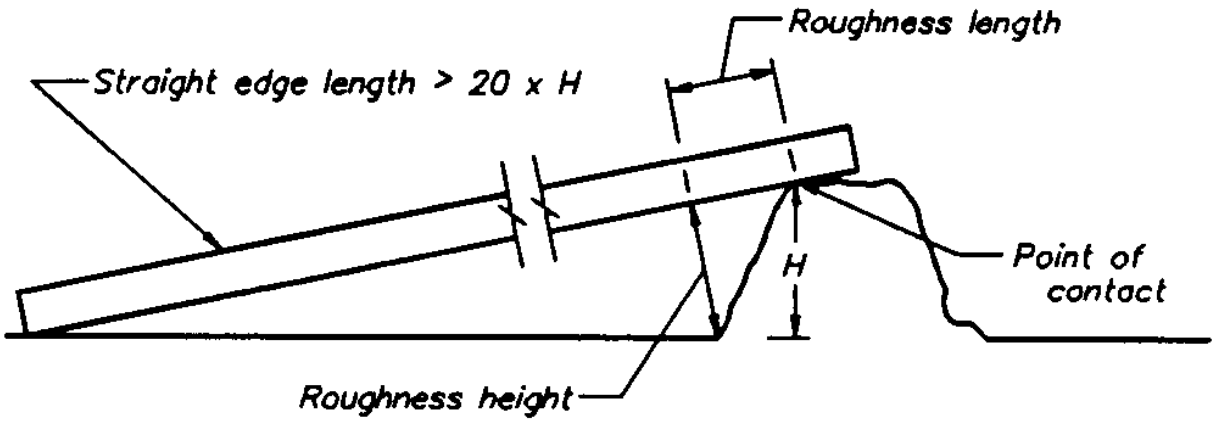

CASE 1

$$\text{Roughness slope} = \frac{\text{Roughness depth}}{\text{The shortest distance L1 or L2}}$$

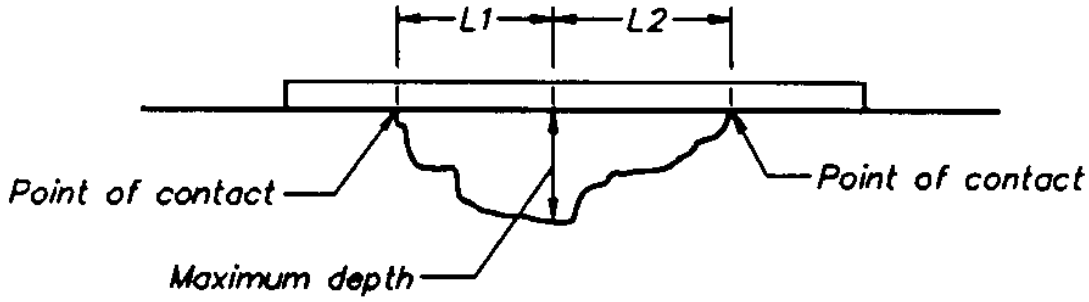

CASE 2

FIGURE 2

K. Prevention of repeated failure to meet tolerances:

1. When concrete placements result in hardened concrete which does not meet specified tolerances, submit to COR an outline of preventive actions such as modifications to forms, modified procedure for setting screeds, and different finishing techniques to be implemented to avoid repeated failures. Submit when requested by COR.

2. Government reserves the right to delay concrete placements until preventive actions which have been approved by COR are implemented.

3.06 CURING

A. Water Curing:

1. Keep concrete surface wet for 14 days, minimum, from time concrete has attained sufficient set to prevent detrimental effects to surface.

2. Cure methods:

a. Water-saturated material.

b. System of perforated pipes, mechanical sprinklers, or porous hose.

c. Other methods which will keep surfaces wet.

d. Subject to approval by COR.

B. Curing with Curing Compound:

1. Apply to concrete surface to provide water-retaining film. Reapply as necessary to maintain continuous, water-retaining film on surface for 28 days.

2. Thoroughly mix compound and spray apply in one coat to provide continuous, uniform film over surface.

3. Do not exceed coverage rate recommended by curing compound manufacturer. Decrease coverage rate on rough surfaces as necessary to obtain required continuous film.

4. Ensure ample coverage on edges, corners, and rough surfaces.

5. Use spray equipment recommended by curing compound manufacturer.

C. Sheet Material Curing:

1. Thoroughly moisten concrete surface by lightly spraying with water as soon as concrete has hardened sufficiently to prevent damage.

2. Completely cover concrete surface with sheet material to provide airtight, water-retaining film over entire surface.

3. Lap edges of sheet material to seal adjacent sheets.

4. Place tightly against concrete surface at extreme edge of curing area.

5. Secure sheet material to withstand wind and prevent circulation of air inside sheet material.

6. Keep surface covered for 14 days, minimum.

3.07 CONTRACTOR FIELD QUALITY TESTING

A. Perform sampling, testing, and reporting as required in Table 03 30 00E – Field Testing:

1. Independent testing agency shall meet requirements specified in Section 01 46 20 – Testing Agency Services.

2. Personnel conducting plastic concrete field tests: Qualified as ACI Concrete Field-Testing Technician, Grade 1; or equal.

3. Personnel conducting concrete specimen tests: Qualified as ACI Concrete Strength Testing Technician; or equal.

B. Perform tests at least as often as frequencies specified in Table 03 30 00E – Field Testing.

C. Notify COR immediately of test results showing failure of materials to meet specifications. Notify COR within 2 hours of test results showing materials meet specifications. Submit reports of test results as specified.

3.08 FIELD QUALITY ASSURANCE

A. In addition to specified Contractor Quality Field Testing, Government may also perform tests listed in Table 03 30 00E – Field Testing.

Table 03 30 00E – Field Testing

TESTS OF	TEST STANDARD	STANDARD TITLE	TESTING FREQUENCY
Fresh Concrete Properties - tests performed at site	ASTM C143	Slump of Hydraulic-Cement Concrete	1 set of tests per load for first 2 loads. When tested concrete meets specifications, 1 set of tests each day of placement for each mixture for first 50 or less cubic yards, and 1 set of tests for each additional 100 cubic yards of concrete. Minimum of 1 set of tests per hour during placements. When concrete does not meet specifications, test each load until 2
	ASTM C231	Air Content of Freshly Mixed Concrete by the Pressure Method (alternative to ASTM C138 gravimetric method)	

Table 03 30 00E – Field Testing

TESTS OF	TEST STANDARD	STANDARD TITLE	TESTING FREQUENCY
	ASTM C1064	Temperature of Freshly Mixed Hydraulic-Cement Concrete	consecutive loads meet specifications, then resume testing frequency specified above.
	ASTM C138	Density (Unit Weight), Yield, and Air Content (Gravimetric) of Concrete	
Compressive Strength	ASTM C31 ASTM C39	Making and Curing Concrete Test Specimens in the Field Compressive Strength of Cylindrical Concrete Specimens	1 set of samples (6-inch by 12-inch for each day of placement for each mixture for the first 50 or less cubic yards, and 1 set of samples for each additional 100 cubic yards of concrete. A minimum of 5 samples for strength testing shall be made each time strength samples are collected. 2 additional field cured test cylinders during placement in adverse (hot or cold) weather. Cure these samples on jobsite under same conditions as concrete the cylinders represent for minimum of 7 days, then transfer to testing laboratory until testing at strength design days. Test 2 cylinders each at 7 days age and 2 cylinders at strength design age. Maintain last cylinder for testing in event that the strength design age test results fall below the required strength.

Table 03 30 00E – Field Testing

TESTS OF	TEST STANDARD	STANDARD TITLE	TESTING FREQUENCY
Concrete Cores	ASTM C42	Obtaining and Testing Drilled Cores and Sawed Beams of Concrete	At discretion of Government when cylinder strengths fail to meet minimum requirements. Contractor shall obtain core specimens in accordance with ASTM C42 at locations directed by COR, at no additional cost to the Government. Contractor shall repair core holes in accordance with USBR M-47 as directed by COR

B. Acceptance criteria:

1. Cylinder compressive strength:

   a. In accordance with ASTM C94, except as follows:

      1) 90 percent of test cylinders exceed specified compressive strength at design age.

      2) Average compressive strength of six consecutive test cylinders exceeds specified compressive strength at design age.

      3) No individual strength test falls below specified compressive strength by more than 500 pounds per square inch.

2. Drilled concrete cores:

   a. Concrete in placement represented by core tests will be considered structurally adequate when average compressive strength of three cores is equal to at least 85 percent of specified compressive strength and no single core has a compressive strength of less than 75 percent of specified compressive strength.

3.09 PROTECTION

A. Protect concrete from damage until final acceptance by Government:

1. Do not load, remove forms or shoring, or backfill against concrete until concrete has gained sufficient strength to safely support its weight and imposed loads.

2. Protect fresh concrete against erosion from rain, hail, sleet, or snow; contamination from foreign materials; and damage from foot traffic until the concrete has hardened.

3. Protect concrete from heavy foot traffic and other construction activities by covering with plywood. Remove and dispose of temporary covering when no longer required.

B. Protect concrete from cold weather:

1. If ambient temperatures are predicted to drop below 50 degrees F:

a. Maintain concrete at a temperature of 50 degrees F (10 degrees C) or greater for 72 hours, minimum, after placement. Vent heater and prevent concrete from drying where artificial heat is employed.

b. Protect concrete from freezing during water curing. After discontinuance of water curing, maintain at a temperature of 50 degrees F (10 degrees C) or greater for next 72 hours.

c. Discontinue protection against cold weather such that the drop in temperature of the concrete will be gradual and will not exceed 5 degrees F per hour and 40 degrees F in 24 hours [for thin sections and 5 degrees F per hour and 20 degrees F in 24 hours for massive sections greater than 36 inches.

3.10 REPAIR

A. Repair concrete in accordance with USBR M-47.

B. Use repair or replacement method directed by COR.

3.11 FINISH, SURFACE TOLERANCES, AND CURING SCHEDULES

Table 03 30 00F – Formed Surfaces

Surface	Finish	Maximum Allowable Tolerances	Acceptable Curing Methods
Surfaces upon or against which fill material will be placed	F1	T1	Water, White ASTM C309 Class A or B curing compound for horizontal surfaces, and White ASTM C309, Class B curing compound for vertical or sloped surfaces.
Surfaces not permanently concealed by fill material or concrete where appearance is not critical	F2	T2 and T3	Water, White ASTM C309 Class A or B curing compound for horizontal surfaces, and White ASTM C309, Class B curing compound for vertical or sloped surfaces.

Table 03 30 00F – Formed Surfaces

Surface	Finish	Maximum Allowable Tolerances	Acceptable Curing Methods
Pedestals and equipment foundations	F2	T5	ASTM C1315 Class A Clear curing compounds, water-emulsified resin-base if outdoors, Polyethylene film

Table 03 30 00G – Unformed Surfaces

Surface	Finish	Maximum Allowable Tolerances	Acceptable Curing Methods
Surfaces to be covered by fill material or concrete	U1	T1	White ASTM C309 Class A or B curing compound for horizontal surfaces, and White ASTM C309, Class B curing compound for vertical or sloped surfaces
Outdoor equipment slabs and foundations	U2	T3	White ASTM C309 Class A or B curing compound, Polyethylene film or White Burlap-polyethylene sheet
Interior floor slabs for pumping plant	F3	T5	White ASTM C309 Class A or B curing compound, Polyethylene film or White Burlap-polyethylene sheet

END OF SECTION

SECTION 03 35 10
CONCRETE FLOOR HARDENER

PART 1 GENERAL

1.01 MEASUREMENT AND PAYMENT

A. Concrete Floor Hardener:

1. Measurement: Area of floor on which concrete floor hardener applied.
2. Payment: Square foot price offered in the Price Schedule.

1.02 SUBMITTALS

A. Submit in accordance with Section 01 33 00 – Submittals.

B. RSN 03 35 10-1, Manufacturer's Instructions:

1. Rate of coverage and application procedures.

PART 2 PRODUCTS

2.01 MATERIALS

A. Commercial mixtures:

1. Master Kure HD 300 WB manufactured by Master Builders Solutions Constructions Systems US, LLC, 889 Valley Park Dr., Shakopee MN 55379, or Con-O-Lith manufactured by Con-Spec Industries, 9525-63 Avenue NW, Edmonton, Alberta T6E 0G2: or equal with the following essential characteristics:
   a. Contains magnesium fluosilicates, zinc fluosilicates, or sodium fluosilicates individually or in combination with a wetting agent.
   b. Colorless aqueous solution.

PART 3 EXECUTION

3.01 PREPARATION

A. After concrete floors have thoroughly cured and at such time as approved by COR, clean concrete surfaces thoroughly of curing compound, dirt, grease, laitance, or other foreign matter as recommended by manufacturer.

3.02 APPLICATION

A. Apply concrete floor hardener to the following areas:

1. Pump and Air Chamber Rooms

B. Apply three coats of floor hardener immediately after floors are dry from cleaning:

1. Coverage rate and application procedures: As recommended by manufacturer of liquid floor hardener.

C. Spread each coat of floor hardener uniformly.

D. Prevent pools of hardener solution from appearing.

E. Allow each coat to dry thoroughly before next coat is applied.

F. After last coat has dried, brush floors and wash with water to remove crystals which may have formed on surface.

END OF SECTION

SECTION 03 48 00
PLANT-PRECAST CONCRETE STRUCTURES

PART 1 GENERAL

1.01 MEASUREMENT AND PAYMENT

A. Plant-Precast Concrete Structures:

1. Payment: Lump sum prices offered in the Price Schedule:

   a. As shown on drawings.

      1) Manifold Access Vault.

      2) Blowoff Enclosure.

      3) Pullboxes.

1.02 REFERENCE STANDARDS

A. American Association of State Highway and Transportation Officials (AASHTO)

1.	AASHTO HB-17	Standard Specifications for Highway Bridges, Seventeenth Edition

B. ASTM International (ASTM)

1.	ASTM A123/A123M-24	Zinc (Hot-Dip Galvanized) Coatings on Iron and Steel Products
2.	ASTM C31/C31M-24b	Making and Curing Concrete Test Specimens in the Field
3.	ASTM C33/C33M-24a	Concrete Aggregates
4.	ASTM C39/C39M-24	Compressive Strength of Cylindrical Concrete Specimens
5.	ASTM C138/C138M-24a	Test Method for Density (Unit Weight), Yield, and Air Content (Gravimetric) of Concrete
6.	ASTM C143/C143M-20	Test Method for Slump of Hydraulic-Cement Concrete
7.	ASTM C173/C173M-24a	Test Method for Air Content of Freshly Mixed Concrete by the Volumetric Method
8.	ASTM C192/C192M-24	Making and Curing Concrete Test Specimens in the Laboratory
9.	ASTM C231/C231M-24	Test Method for Air Content of Freshly Mixed Concrete by the Pressure Method

10.	ASTM C443/C443M-21	Joints for Concrete Pipe and Manholes, Using Rubber Gaskets
11.	ASTM C478/C478M-22	Circular Precast Reinforced Concrete Manhole Sections
12.	ASTM C497-20e1	Concrete Pipe, Concrete Box Sections, Manhole Sections, or Tile
13.	ASTM C857-19	Minimum Structural Design Loading for Underground Precast Concrete Utility Structures
14.	ASTM C858-19	Underground Precast Concrete Utility Structures
15.	ASTM C877-21	External Sealing Bands for Concrete Pipe, Manholes, and Precast Box Sections
16.	ASTM C920-18(2024)	Elastomeric Joint Sealants
17.	ASTM C923/C923M-20	Resilient Connectors Between Reinforced Concrete Manhole Structures, Pipes, and Laterals
18.	ASTM C990/C990M-24	Joints for Concrete Pipe, Manholes, and Precast Box Sections Using Preformed Flexible Joint Sealants
19.	ASTM C1064/C1064M-23	Test Method for Temperature of Freshly Mixed Hydraulic-Cement Concrete
20.	ASTM C1107/C1107M-20	Packaged Dry, Hydraulic-Cement Grout (Nonshrink)
21.	ASTM C1478/C1478M-20	Storm Drain Resilient Connectors Between Reinforced Concrete Storm Sewer Structures, Pipes, and Laterals
22.	ASTM C1611/C1611-21	Test Method for Slump Flow of Self-Consolidating Concrete
23.	ASTM D751-19	Test Methods for Coated Fabrics
24.	ASTM D2136-19e1	Test Method for Coated Fabrics – Low-Temperature Bend Test

C. Code of Federal Regulations (CFR)

1.	29 CFR 1910.27	Fixed Ladders
2.	29 CFR 1910.24	Fixed Industrial Stairs

D. National Precast Concrete Association (NPCA)

1. NPCA QC Manual — Quality Control Manual for Precast Concrete Plants

1.03 SUBMITTALS

A. Submit in accordance with 01 33 00 – Submittals.

B. RSN 03 48 00-1, Certificates:

1. Quality control procedures in accordance with NPCA QC Manual or verification of current NPCA Plant Certification.

C. RSN 03 48 00-2, Shop Drawings:

1. Precast Structure:
   a. Indicate design assumptions.
   b. Show conformance to project drawings and requirements.
   c. Details of steel reinforcement size and placement.
   d. Details of joint sealant placement.
   e. Details of pipe entry connectors.
   f. Installation and construction information.
   g. Signed and sealed by engineer registered in one of 50 States of the United States or District of Columbia.

D. RSN 03 48 00-3, Product Data and Test Reports:

1. Delivery, storage, and handling instructions.
2. Anchorage, Lifting Inserts and Devices:
   a. Product data sheets and installation instructions.
   b. Indicate Unit dimensions and safe working loads.
3. Accessory Items:
   a. Including, but not limited to sealants, gaskets, pipe entry connectors, steps, racks, and other items installed before or after delivery.
   b. Installation instructions and relevant product data upon request.
4. Test Reports:
   a. Upon request, precast concrete producer shall supply copies of material certifications and/or laboratory test reports, including mill tests and all other test data, for portland cement, blended cement, pozzolans, ground granulated blast-furnace slag, silica fume, aggregate, admixtures, and curing compound proposed for use on this project.
   b. Upon request, precast concrete producer shall submit copies of test reports showing that mix has been successfully tested to produce concrete with

properties specified and will be suitable for project conditions. Such tests may include compressive strength, flexural strength, plastic or hardened air content, freeze-thaw durability, abrasion and absorption. Special tests for precast concrete items shall be clearly detailed in the specifications.

c. Upon request, precast concrete producer will supply copies of in-plant QA/QC inspection reports.

1.04 QUALIFICATIONS

A. NPCA Plant Certification: Prior to and during production of products.

B. Producer Qualifications:

1. Minimum of 5 years business experience producing similar products.
2. Maintain permanent quality control department or retain an independent testing agency on continuing basis. Agency shall issue a report, signed by a licensed PE, detailing ability of precast concrete producer to produce quality units meeting requirements.

1.05 DELIVERY, STORAGE AND HANDLING

A. Per producers' recommendations.

PART 2 PRODUCTS

2.01 SYSTEM DESCRIPTION

A. Plan view showing locations of precast concrete vaults, manholes and pullboxes is provided on Drawings 1695-D-60826 and 1695-D-60988.

Conceptual Layout	Drawing No.
Manifold Access Vault	1695-D-60870
Blowoff Enclosures	1695-D-60871

2.02 DESIGN REQUIREMENTS:

A. Standard Precast Concrete Unit:

1. Structure and covers: Withstand HS 20-44 as defined in AASHTO SSHB and ASTM C857.
2. Consider stresses induced during handling, shipping, and installation.
3. Indicate design loads on shop drawings.
4. Provide block-outs and pipe entry connectors as required.

B. Blowoff Enclosure Lid Design

1. Support design live load of 100 psf.

C. Joints and Sealants:

1. Meet specified design requirements.
2. Show on shop drawings.

2.03 MATERIALS

A. Concrete and Reinforcement: ASTM C858.

B. Inserts and Embedded Metal:

1. Section 05 50 00 – Metal Fabrications.
2. Proprietary Items: In accordance with manufacturers published literature.

C. Joint Sealants and Joint Gaskets:

1. Rubber Gaskets for Circular Concrete: ASTM C443.
2. External Sealing Bands for Noncircular Pipe: ASTM C877.
3. Preformed Flexible Joint Sealants: ASTM C990.
4. Elastomeric Joint Sealants: ASTM C920.

D. Pipe Entry Connectors:

1. ASTM C923.
2. ASTM C1478.

E. Nonshrink grout in accordance with Section 03 62 20 – Nonshrink Grout for Equipment and Metalwork

F. Cementitious Grout: Suitable mix design for intended use, consisting of portland cement, sand, and water.

2.04 VAULT SECTIONS

A. Conform to ASTM C858:

B. Bell and spigot joints.

C. No elliptical reinforcement allowed.

D. Joint Sealant: As recommended by manufacturer.

E. Vault for manifold access as shown on drawings.

F. Prefabricated lids as shown on drawings.

G. Ladder and ladder accessories in accordance with Section 05 50 00 – Metal Fabrications.

H. Floor access hatches in accordance with Section 08 31 25 – Floor Access Hatches.

2.05 RECTANGULAR BLOWOFF ENCLOSURE

A. Concrete Vault: ASTM C858.

B. Joint Sealant: As recommended by manufacturer.

C. 4-foot tall by 5-foot wide, by 3-foot long (inside dimensions), open bottom concrete enclosure for blowoff-pipe assembly access as shown on drawings.

D. Flush Mounted Cover:

1. As shown on drawings.
2. Hot-dipped galvanized steel cover sections fabricated from structural steel and steel plate with raised diamond pattern.
3. Galvanizing: ASTM A123.
4. Sections suitable for manual handling.

2.06 RECTANGULAR PULLBOXES

A. Concrete Vault: ASTM C858.

B. Joint Sealant: As recommended by manufacturer.

C. 3-foot 6-inch tall by 4-foot wide, by 4-foot long (inside dimensions), open bottom concrete vault as shown on drawings.

D. Flush Mounted Cover:

1. HS 20-44 Traffic rated.
2. Hot-dipped galvanized steel cover sections fabricated from structural steel and steel plate with raised diamond pattern:
   a. Galvanizing: ASTM A123.
3. Cover sections suitable for manual handling.

2.07 BEDDING

A. ASTM C33, coarse aggregate, Size No. 57.

2.08 BATTEN SYSTEM

A. Stainless steel anchors in accordance with Section 05 50 00 – Metal Fabrications.

B. Stainless steel plate in accordance with Section 05 50 00 – Metal Fabrications.

C. Reinforced polypropylene geomembrane, manufactured by Environmental Protection, Inc., www.geomembrane.com or equal with the following essential characteristics:

1. Gauge, Nominal (ASTM D751): 36 ±10 percent mils
2. Breaking Strength (ASTM D751, Method A: 250 x 200 pounds (lbs.).
3. Tear Strength (ASTM D751): 100 lbs.
4. Low Temperature (ASTM D2136): -65 degrees F
5. Puncture Strength (FTMS-101 B, Method 2031): 250 lbs.

2.09 QUALITY CONTROL

A. Perform tests indicated in Table 03 48 00A – Quality Control Tests.

Table 03 48 00A – Quality Control Tests

Property	Quantity	Standard
Slump	150 yd^3, minimum once per day.	ASTM C143 ASTM C1611, if applicable
Temperature	With slump and air tests. Production of compressive test specimens.	ASTM C1064
Compressive Strength	Minimum of 4 for per 150 yd^3.	ASTM C31 ASTM C39 ASTM C192 ASTM C497
Air Content	150 yd^3, minimum once per day when air entrained concrete is used.	ASTM C231 for normal weight aggregates ASTM C173 for lightweight aggregates
Density (Unit Weight)	100 yd^3, not less than one per day.	ASTM C138 for light weight concrete

2.10 GOVERNMENT INSPECTION

A. Government may inspect plant during production. Notify COR 14 days prior production.

PART 3 EXECUTION

3.01 INSTALLATION

A. Site Access:

1. Contractor shall be responsible for providing adequate access to site to facilitate hauling, storage and proper handling of precast concrete units.

B. Installation:

1. Precast concrete units shall be installed to lines and grades shown in contract documents or otherwise specified.
2. Place a minimum of 6-inches aggregate bedding below rectangular concrete pullboxes, in accordance with Section 31 23 02 – Compacting Earth Materials.
3. Precast concrete units shall be lifted by suitable lifting devices at points provided by precast concrete producer.
4. Precast concrete units shall be installed in accordance with applicable industry standards. Upon request, precast concrete producer shall provide installation instructions.
5. Field modifications to product shall not relieve precast producer of liability regardless if such modifications result in failure of precast concrete unit.

C.

END OF SECTION

SECTION 03 62 20
NONSHRINK GROUT

PART 1 GENERAL

1.01 MEASUREMENT AND PAYMENT

A. Cost:

1. Include in prices offered in the Price Schedule for items requiring nonshrink grout.

1.02 REFERENCE STANDARDS

A. ASTM International (ASTM)

1. ASTM C1107/C1107M-20 Packaged Dry, Hydraulic-Cement Grout (Nonshrink)

1.03 SUBMITTALS

A. Submit in accordance with Section 01 33 00 – Submittals.

B. RSN 03 62 20-1, Packaged Nonshrink Grout Data:

1. Manufacturer's product data.
2. Manufacturer's certification that product meets specifications.
3. Manufacturer's instructions:
   a. Surface preparation, mixing, installation, finishing, curing, and protection recommendations:
      1) Include specific recommendations based on anticipated jobsite temperatures and environmental conditions.
      2) Include manufacturer's recommended methods for float finishing grout.
      3) Include manufacturer's recommended minimum temperature and protection period for protecting grout from freezing and damage after placement.

PART 2 PRODUCTS

2.01 PACKAGED NONSHRINK GROUT

A. Only allowable use for nonshrink grout is pipe penetration and electrical channel bases. All other references in spec to grout shall be epoxy grout in accordance with Section 03 63 00

B. Pre-mixed commercial grout mixture:

1. ASTM C1107.

C. Water:

1. Clean.
2. Free of detrimental quantities of silt, organic matters, salts, or other impurities.
3. As recommended by grout manufacturer.

D. Mix: In accordance with manufacturer's instructions to consistency recommended by manufacturer for application.

PART 3 EXECUTION

3.01 PREPARATION

A. Clean and prepare base concrete surface to which nonshrink grout will be bonded in accordance with manufacturer's instructions or as directed by COR:

1. Roughen surface.
2. Remove dirt, laitance, loose or defective concrete, curing compound, coatings, and other foreign material.
3. Wash with water.

B. Lubricate concrete surface by washing with water immediately before placing nonshrink grout when delay occurs between washing and placing nonshrink grout.

3.02 PLACING

A. Place nonshrink grout in accordance with manufacturer's instructions to completely fill space to be grouted.

B. Use forms, where required, to confine nonshrink grout.

3.03 CURING

A. Cure exposed surface of packaged nonshrink grout by method recommended by manufacturer.

B. Do not apply loads sooner than 72 hours after placement and only after nonshrink grout has attained compressive strength of at least 3,000 lb/in^2.

END OF CONTENTS

This page intentionally left blank.

SECTION 03 63 00
EPOXY GROUT

PART 1 GENERAL

1.01 MEASUREMENT AND PAYMENT

A. Cost:

1. Include in prices offered in the Price Schedule for items requiring epoxy grout.

1.02 REFERENCE STANDARDS

A. ASTM International (ASTM)

1.	ASTM C579-23	Compressive Strength of Chemical-Resistant Mortars, Grouts, Monolithic Surfacing and Polymer Concretes
2.	ASTM C580-18(2023)	Flexural Strength and Modulus of Elasticity of Chemical-Resistant Mortars, Grouts, Monolithic Surfacing's, and Polymer Concretes
3.	ASTM D638-22	Tensile Properties of Plastics
4.	ASTM D696-24	Coefficient of Linear Thermal Expansion of Plastic Between minus 30 and 30 degrees C with a Vitreous Silica Dilatometer

1.03 SUBMITTALS

A. Submit in accordance with Section 01 33 00 – Submittals.

B. RSN 03 63 00-1, Approval Data:

1. Grout manufacturer's product data.
2. Grout manufacturer's environmental, product storage, preparation, mixing, installation and curing instructions.

1.04 DELIVERY, STORAGE, AND HANDLING

A. Deliver epoxy materials to jobsite in manufacturer's original unopened packaging with labels and seals intact.

B. Store epoxy materials in protected area in accordance with manufacturer's instructions.

PART 2 PRODUCTS

2.01 EPOXY GROUT

A. Three part flowable epoxy grout; resin, hardener, and aggregate filler:

1. CHOCKFAST RED manufactured by ITW Performance Polymers, 130 Commerce Drive, Montgomery PA; or equal, having the following essential characteristics:

   a. ASTM C579 Compressive Strength: Minimum of 15,000 psi.

   b. ASTM C579 Compressive Modulus: 2,000,000 psi.

   c. ASTM D696 Coefficient of Linear Thermal Expansion:

      1) 11.2×10^{-6} degrees F.

   d. ASTM C580 Flexural Strength: Minimum 4,000 psi.

   e. ASTM D638 Tensile Strength: Minimum 1,800 psi.

   f. Service temperature: Up to 140 degrees F.

   g. Pot life: Approximately 3 hours at 70 degrees F.

   h. Shelf life: 2 years in dry storage.

B. Aggregate filler as recommended by manufacturer.

PART 3 EXECUTION

3.01 INSTALLATION

A. Mix and install grout in accordance with manufacturer's instructions to fill space to be grouted:

1. Concrete shall be a minimum of 28 days old.
2. Clean and roughen concrete surfaces.
3. Remove dirt, dust, oil, grease, debris, paint, curing compounds, sealers, and unsound concrete.
4. Mechanically prepare concrete surfaces in accordance with manufacturer's instructions to give surface profile of a minimum of 1/8 inch and expose coarse aggregate of concrete.
5. Concrete shall have an open surface texture.

B. Placement:

1. Place grout at air temperature recommended by manufacturer.
2. Bring materials to be epoxied as close to 70 degrees F as possible.
3. Do not place grout over frozen concrete.

4. Hold grout in place with forms. Prepare forms to prevent sticking of grout.
5. Minimum 3/4-inch by 3/4-inch, 45-degree chamfer.
6. Mix grout components in accordance with manufacturer's instructions and technical data sheet.
7. Place grout in accordance with manufacturer's instructions.
8. Finish surface of grout in accordance with manufacturer's instructions.
9. Smooth sharp edges.

C. Protection:

1. Protect placed grout from damage during construction.
2. Maintain grout at 50 degrees F or greater for 72 hours, minimum, after placement unless otherwise recommended by manufacturer:
   a. After protection period, discontinue protection against cold weather such that the drop in temperature of the grout will be gradual and will not exceed 5 degrees F per hour and 40 degrees F in 24 hours.
3. The more stringent of grout manufacturer's recommendation or this section shall apply.
4. Initial Loading:
   a. Do not apply loads to epoxy grout sooner than 72 hours after placement:
      1) Apply load after epoxy grout has attained a compressive strength of 3,000 psi, minimum.
   b. Time required for epoxy grout used to attain this strength will be determined by COR.
   c. Take care when applying loads on hardened epoxy grout.
   d. Contractor shall be responsible for damage resulting from impact loads when positioning equipment or metalwork.

D. Protect from movement until grout has fully cured.

END OF SECTION

This page intentionally left blank.

SECTION 05 50 00
METAL FABRICATIONS

PART 1 GENERAL

1.01 MEASUREMENT AND PAYMENT

A. Metal Fabrications:

1. Payment: Lump sum prices offered in the Price Schedule:

   a. Includes:

      1) Pipe guard posts.

      2) Electrical Equipment supports.

      3) Channel bases for electrical power equipment.

      4) Fasteners for complete installation of metalwork.

B. Cost:

1. Include costs of following items in prices offered in the Price Schedule for Plant-Precast Concrete Structures:

   a. Ladder and accessories.

   b. Precast concrete structure batten system.

   c. Fasteners for complete installation of metalwork.

1.02 DEFINITIONS

A. Miscellaneous metalwork: Where either shown on drawings or specified elsewhere in this section or these specifications means metal fabrications as used in this section.

1.03 REFERENCE STANDARDS

A. Aluminum Association (AA)

1. AA ADM-2020 Aluminum Design Manual - 2020

B. American Institute of Steel Construction (AISC)

1. AISC 360-16 Steel Construction Manual - 15th Edition

C. American National Standards Institute (ANSI)

1. ANSI A14.3-2018 Ladders – Fixed – Safety Requirements

D. American Society of Mechanical Engineers (ASME)

1.	ASME B1.1-2019	Unified Inch Screw Threads (UN and UNR Thread Form)
2.	ASME B18.2.1-2012	Square, Hex, Heavy Hex, and Askew Head Bolts and Hex, Heavy Hex, Hex Flange, Lobed Head, and Lag Screws (Inch Series)

E. ASTM International (ASTM)

1.	ASTM A36/A36M-14	Carbon Structural Steel
2.	ASTM A48/A48M-03(2021)	Gray Iron Castings
3.	ASTM A53/A53M-20	Pipe, Steel, Black and Hot-Dipped, Zinc-Coated, Welded and Seamless
4.	ASTM A108-18	Steel Bar, Carbon and Alloy, Cold-Finished
5.	ASTM A123/A123M-17	Zinc (Hot-Dip Galvanized) Coatings on Iron and Steel Products
6.	ASTM A153/A153M-16a	Zinc Coating (Hot-Dip) on Iron and Steel Hardware
7.	ASTM A193/A193M-20	Alloy-Steel and Stainless-Steel Bolting for High Temperature or High-Pressure Service and Other Special Purpose Applications
8.	ASTM A276/A276M-17	Stainless Steel Bars and Shapes
9.	ASTM A307-21	Carbon Steel Bolts, Studs, and Threaded Rod 60 000 PSI Tensile Strength
10.	ASTM A385/A385M-20	Providing High-Quality Zinc Coatings (Hot-Dip)
11.	ASTM A536-84(2019)e1	Ductile Iron Castings
12.	ASTM A563-21a	Carbon and Alloy Steel Nuts
13.	ASTM A615/A615ae1	Deformed and Plain Carbon-Steel Bars for Concrete Reinforcement
14.	ASTM A666-15	Annealed or Cold-Worked Austenitic Stainless-Steel Sheet, Strip, Plate, and Flat Bar
15.	ASTM B209-14	Aluminum and Aluminum-Alloy Sheet and Plate
16.	ASTM B221-20	Aluminum and Aluminum-Alloy Extruded Bars, Rods, Wire, Profiles, and Tubes
17.	ASTM B632/B632M-18	Aluminum-Alloy Rolled Tread Plate

18.	ASTM D792-20	Density and Specific Gravity (Relative Density) of Plastics by Displacement
19.	ASTM D1004-21	Tear Resistance (Graves Tear) of Plastic Film and Sheeting
20.	ASTM D1505-18	Density of Plastics by the Density-Gradient Technique
21.	ASTM D1603-20	Carbon Black in Olefin Plastics
22.	ASTM D3895-19	Oxidative Induction Time of Polyolefins by Differential Scanning Calorimetry
23.	ASTM D4833-07(2020)	Index Puncture Resistance of Geomembranes and Related Products
24.	ASTM D5397-20	Evaluation of Stress Crack Resistance of Polyolefin Geomembranes Using Notched Constant Tensile Load Test
25.	ASTM D5596-03(2021)	Microscopic Evaluation of the Dispersion if Carbon Black in Polyolefin Geosynthetics
26.	ASTM D5721-08(2018)	Air-Oven Aging of Polyolefin Geomembranes
27.	ASTM D5885-20	Oxidative Induction Time of Polyolefin Geosynthetics by High-Pressure Differential Scanning Calorimetry
28.	ASTM D5994-10(2021)	Measuring Core Thickness of Textured Geomembrane
29.	ASTM D6693-20	Tensile Properties of Nonreinforced Polyethylene and Nonreinforced Flexible Polypropylene Geomembranes
30.	ASTM D7238-20	Effect of Exposure of Unreinforced Polyolefin Geomembrane Using Fluorescent UV Condensation Apparatus
31.	ASTM D7466-10(2015)e1	Asperity Height of Textured Geomembrane
32.	ASTM F467-13(2018)	Nonferrous Nuts for General Use
33.	ASTM F593-17	Stainless Steel Bolts, Hex Cap Screws, and Studs
34.	ASTM F594-09(2020)	Stainless Steel Nuts
35.	ASTM F844-19	Washers, Steel, Plain (Flat), Unhardened for General Use

F. American Welding Society, Inc. (AWS)

1.	AWS D1.1/D1.1M-20	Structural Welding Code – Steel

2. AWS D1.2/D1.2M-14 Structural Welding Code – Aluminum

G. Commercial Item Description (CID)

1. CID A-A-1923A Shield, Expansion (Lag, Machine and Externally Threaded Wedge Bolt Anchors)

H. Geosynthetics Research Institute Standards (GRI)

1. GRI GM 13 Test Properties, Testing Frequency and Recommended Warranty for High Density Polyethylene (HDPE) Smooth and Textured Geomembranes

I. International Code Council (ICC)

1. ICC ES AC 308 Acceptance Criteria for Post-Installed Adhesive Anchors in Concrete, November 2009

2. ICC IBC – 2021 International Building Code

J. National Association of Architectural Metal Mfrs. (NAAMM)

1. NAAMM MBG 531-17 Metal Bar Grating Manual

K. Society of Protective Coatings (SSPC)/NACE International (NACE)

1. SSPC-SP 6/NACE 3-2007 Joint Surface Preparation Standard - NACE No. 3/ SSPC-SP 6 – Commercial Blast Cleaning

1.04 QUALIFICATIONS

A. Qualify welders in accordance with AWS D1.1 and D1.2 using procedures, materials, and equipment of the type required for the work.

1.05 DELIVERY, STORAGE, AND HANDLING

A. Store items in an enclosed area free from contact with soil and weather.

PART 2 PRODUCTS

2.01 MATERIALS

A. Aluminum: ASTM B209, alloy 6061-T6 (plates) and ASTM B221, alloy 6061 (bars).

B. Aluminum Floor Plate: ASTM B632, alloy 6061-T6.

C. Arc-Welding Electrodes:

1. Use filler metal and shielding gases suitable for base materials, positions, and other conditions.
2. Filler metal and required shielding gases or fluxes: AWS D1.1 and D1.2.
3. Use filler metal with a minimum tensile strength of 70,000 pounds per square inch (psi) for steel.
4. Aluminum alloy filler metal: AWS classification 4043.

D. Bolts, Threaded Rods, Nuts, And Washers:

1. Bolts:
   a. ASTM A307.
   b. Length of bolt threads: ASME B18.2.1.
   c. Thread class: Two free-fit, American National coarse-thread series.
2. Threaded Rod:
   a. ASTM B221.
   b. Thread class: Two free-fit, American National coarse-thread series.
3. Nuts:
   a. Steel: ASTM A563.
   b. Aluminum: ASTM F467.
4. Washers:
   a. Steel: ASTM F844, unhardened for general use.
   b. Aluminum: ASTM B209.

E. Expanded Metal: ASTM B209.

F. Grating: NAAMM MBG 531 galvanized steel:

1. Welded grating.
2. Where safety grating is required, provide serrated-edge grating.
3. Banding bar: Unless otherwise shown on drawings, provide same size as bearing bars, where required.

G. Steel Pipe: ASTM A53, Type E or S, Grade B:

1. Unless otherwise shown on drawings, provide standard-weight, black, steel pipe.
2. Government inspection at the mill and hydrostatic tests will not be required.

H. Structural Steel:

1. Shapes except wide flange sections: ASTM A36.
2. Bars and Plates: ASTM A36.

2.02 STAINLESS-STEEL MATERIALS

A. Structural Shapes: ASTM A276, Type 316.

B. Plates: ASTM A666, Type 316.

C. Stainless Steel Fasteners:

1. Bolts: ASTM F593, hexagonal head.
2. Nuts: ASTM F594, hexagonal head.
3. Washers: Type 316, standard flat.
4. Fasteners for Guardrails and Ladders: Stainless steel Type 316 rivets, 18-8 metal.
5. Mechanical grating clips: Stainless steel, Type 316.

2.03 LADDERS

A. Safety Posts:

1. "Ladder-Up" ladder extensions as manufactured by The Bilco Company, P.O. Box 1203, New Haven, CT 06505, or equal, having the following essential characteristics:
   a. High-strength galvanized steel.
   b. Tubular section that provides upward and downward movement and locks automatically when fully extended in up position.
   c. Upward and downward movement controlled by stainless steel springs.
   d. Operates in corrosive environment.
2. Attach securely to ladder rungs.
3. Extend a minimum of 42 inches above walking surface.

B. Metal Safety Steps for Ladders:

1. "Tread-Grip" No. 11-gauge sheet steel ladder rungs as manufactured by Morton Manufacturing Co., PO Box 640, Libertyville IL 60048, or equal, having the following essential characteristics:
   a. Concentrated design load at center of rung: 250 pounds.
   b. Raised button surface.
   c. Deformed concrete reinforcement not permitted.

2.04 ELECTRICAL EQUIPMENT SUPPORTS

A. Metal Framing:

1. Combination channels as manufactured by Unistrut Corporation, 35660 Clinton Street, Wayne, MI 48184; Cooper B-Line, 509 West Monroe Street, Highland, IL 62249; or equal, having the following essential characteristics and accessories:
    a. Combination channels: Cooper B-Line B12A, Unistrut P5501; or equal, having the following essential characteristics:
        1) No. 12 gauge steel.
        2) Channel: 1 5/8-inch wide by 4 7/8-inch deep with 7/8-inch opening.
        3) Hot-dipped galvanized.
    b. Connection plates: Cooper B-Line B532, Unistrut P1726; or equal, having the following essential characteristics.
        1) Thickness: 1/4-inch.
        2) Hole spacing (from end): 13/16-inch.
        3) Hole spacing (on center): 1 7/8-inch.
        4) Width: 1 5/8-inch.
        5) Hole diameter: 9/16-inch.
        6) Hot-dipped galvanized.
    c. Bolts, nuts, and washers:
        1) Bolts: ASTM A307.
        2) Nuts: Spring nuts, suitable for channel strut attachments.
        3) Washers: ASTM F844.
        4) Hot-dipped galvanized.

B. Fabricated Plates:
    1. ASTM A36 steel, galvanized.

2.05 ANCHORS

A. Adhesive Anchors: Drilled type, installed with a chemical adhesive system:

B. Seismic qualified per ICC IBC and ICC ES AC 308 for seismic design category A through F and cracked concrete conditions.
    1. Adhesive: HIT-RE 500-SD epoxy adhesive manufactured by HILTI, P.O. Box 21148, Tulsa, OK 74121; or equal, having the following essential characteristics:
        a. Injectable 2-component epoxy adhesive.
        b. Dual packaging system designed for automatic mixing during injection.
        c. Weathering resistant.

d. Resistant against high temperatures.

e. Suitable for use in diamond cored or pneumatic drilled holes.

f. Extended temperature ranges from 41 to 120 degrees F.

2. Threaded carbon steel anchor rod: HAS Super rod manufactured by HILTI, P.O. Box 21148, Tulsa, OK 74121; or equal, having the following essential characteristics:

a. Rod material: ASTM A193, Grade B7.

b. Thread: ASME B1.1, continuously threaded (all-thread).

c. Fabricate with 45-degree chisel point on one end to facilitate insertion into adhesive-filled hole.

d. Hot-dip galvanized.

3. Nuts and washers: As recommended by anchor manufacturer.

4. One capsule length minimum bolt length, unless indicated otherwise on drawings.

C. Expansion Anchors: Kwik Bolt 3 torque-controlled expansion anchor body, wedge, nut, and washer as manufactured by HILTI, P.O. Box 21148, Tulsa, OK 74121; or equal, having the following essential characteristics:

1. Meets the requirements of CID A-A-1923A, Type 4.

2. Anchor body and wedge: Carbon steel.

3. Nuts and washers: As recommended by anchor manufacturer.

4. Bolt length: As shown on drawings. If not shown, provide bolt length with 3 1/2-inch minimum embedment.

5. Headed Concrete Anchors (HCA): H4L headed concrete anchor as manufactured by Nelson Stud Welding, Incorporated, 9008 S. Thomas Avenue, Bridgeview, IL 60455; or equal, having the following essential characteristics:

6. ASTM A108.

7. Flux-filled ends suitable for end welding to steel with automatically timed stud-welding equipment.

2.06 STAINLESS STEEL ANCHORS

A. Stainless Steel Expansion Anchors: Kwik Bolt 3 SS 316 torque-controlled expansion anchor body, wedge, nut, and washer as manufactured by HILTI, P.O. Box 21148, Tulsa OK 74121; or equal, having the following essential characteristics:

1. Externally threaded wedge bolt anchor.

2. Meets the requirements of a CID A-A-1923A, Type 4 anchor.

3. Anchor Body and Wedge: Stainless steel, Type 316.

4. Nuts and Washers: As recommended by anchor manufacturer.

5. Bolt Length: As shown on drawings. If not shown, provide bolt length with 3 1/2-inch minimum embedment.

2.07 GUARD POSTS

A. Steel Pipe: ASTM A53, Type E or S, Grade B:

1. Unless otherwise shown on drawings, provide standard-weight, black, steel pipe.
2. Government inspection at mill and hydrostatic tests will not be required.

B. Concrete:

1. In accordance with the applicable requirements of Section 03 30 00 – Cast-In-Place Concrete.
2. 3/4-inch maximum size aggregate.
3. Minimum compressive strength of 4,500 pounds per square inch at 28 days.

C. Reinforcing Bars:

1. ASTM A615, Grade 60.
2. Deformed steel bar.

D. Painting: In accordance with Section 09 96 20 – Coatings.

2.08 CHANNEL BASES FOR ELECTRICAL POWER EQUIPMENT

A. Structural Steel:

1. C Shape: ASTM A36.
2. Size: As indicated on drawings.

B. Expansion Anchors: As indicated on drawings.

C. Grout: In accordance with applicable requirements of Section 03 63 00 – Epoxy Grout.

2.09 FABRICATION

A. Fabricate metalwork in accordance with AISC 325, AA ADM-105, and these specifications:

1. Perform welding and related work in accordance with AWS D1.1 and AWS D1.2.
2. Grind welds on ladders smooth.

B. If straightening is necessary, use methods that will not injure metal.

C. After shop work completion and before galvanizing, clean material of foreign substances.

D. Ladders:

E. Fabricate from standard weight pipe with diameter shown on drawings, or round HSS of same outside diameter and minimum wall thickness of 0.132 inches. Meet requirements of ANSI A14.3.

F. Galvanizing:

1. Galvanize items of metalwork as specified or shown on drawings. Use hot-dip galvanizing in accordance with ASTM A123 and ASTM A385.
2. Galvanize bolts, nuts, washers, and locknuts in accordance with ASTM A153. Remove excess spelter by centrifugal spinning.
3. Fabricator's Galvanizing Repair:
   a. Re-dip material with damaged galvanizing unless damage is local and can be repaired by 2 component epoxy zinc primer.
   b. If galvanized coating becomes damaged after being dipped twice, material will be rejected.
   c. Where local repair is authorized:
4. Repair damage to galvanizing in accordance with Section 09 96 20 – Coatings.

PART 3 EXECUTION

3.01 PREPARATION

A. Where locations and dimensions of miscellaneous metalwork shown on drawings are dependent upon existing equipment and/or equipment furnished, confirm locations and dimensions prior to fabrication of miscellaneous metalwork.

3.02 INSTALLATION

A. Embedded Metalwork:

1. Locate metalwork to be embedded in concrete. Hold metalwork in correct position and alignment and protect metalwork from damage and displacement during placing and setting of concrete.
2. Unless otherwise specified, use only metal braces, supports, and other items to position and align embedded metalwork, which will be embedded in concrete. Do not use wooden braces, supports, or other items to position and align embedded metalwork if they will also be embedded in concrete.
3. Clean surfaces of metalwork to be in contact with or embedded in concrete grouting mortar in accordance with SSPC-SP 6/NACE 3.

B. Anchors:

1. Drill holes for anchors straight and true and of diameter recommended by anchor manufacturer.

2. Install anchors in accordance with manufacturer's recommendations.
3. Follow manufacturer's recommendations when embedded steel or reinforcement is encountered during drilling for anchors.
4. When drilling water is used, clean surfaces of concrete to remain exposed immediately to prevent discoloration.
5. Following drilling, clean holes with water to remove cuttings, followed by air to ensure holes are dry.

C. Guard Posts:

1. Install posts plumb in concrete footings as shown on drawings.
2. Fill posts with concrete and trowel top of post round for water drainage. Posts may be capped in lieu of filling posts with concrete.

D. Installer's Galvanizing Repair: Repair damage to galvanizing in accordance with Section 09 96 20 – Coatings.

E. Holes in Metalwork: Drill, or drill and tap as required, holes in metalwork required for installation.

F. Painting: Paint surfaces of miscellaneous metalwork exposed after installation; except galvanized steel and cast iron; in accordance with Section 09 96 20 – Coatings.

END OF SECTION

This page intentionally left blank.

SECTION 09 96 20
COATINGS

PART 1 GENERAL

1.01 MEASUREMENT AND PAYMENT

A. Cost:

1. Include in prices offered in the Price Schedule for applicable items of work.

1.02 REFERENCE STANDARDS

A. ASTM International (ASTM)

1.	ASTM A780-20	Repair of Damaged and Uncoated Areas of Hot Dip Galvanized Coatings
2.	ASTM B117-19	Standard Practice for Operating Salt Spray (Fog) Apparatus
3.	ASTM C920-18	Elastomeric Joint Sealants
4.	ASTM D870-17	Testing Water Resistance of Coatings Using Water Immersion
5.	ASTM D1002-10(2019)	Apparent Shear Strength of Single-Lap-Joint Adhesively Bonded Metal Specimen by Tension Loading (Metal-to-Metal)
6.	ASTM D2794-93(2019)	Resistance of Organic Coatings to the Effects of Rapid Deformation (Impact)
7.	ASTM D3276-15e1	Guide for Painting Inspectors
8.	ASTM D4060-19	Abrasion Resistance of Organic Coatings by the Taber Abraser
9.	ASTM D4285-83(2018)	Indicating Oil or Water in Compressed Air
10.	ASTM D4541-17	Pull-Off Strength of Coatings Using Portable Adhesion Testers
11.	ASTM D5894-21	Cyclic Salt Fog/UV Exposure of painted Metal, (Alternating Exposures in a Fog/Dry Cabinet and a UV/Condensation Cabinet)
12.	ASTM G8-96(2019)	Cathodic Disbonding of Pipeline Coatings
13.	ASTM G14-04(2018)	Impact Resistance of Pipeline Coatings (Falling Weight Test)

14.	ASTM G95-07(2013)	Cathodic Disbondment Test of Pipeline Coatings (Attached Cell Method)

B. American Water Works Associations (AWWA)

1.	AWWA C 104-16	Cement-Mortar Lining of Ductile-Iron Pipe and Fittings
2.	AWWA C 105-10	Polyethylene Encasement for Ductile-Iron Pipe Systems
3.	AWWA C 203-15	Coal-Tar Protective Coatings and Linings for Steel Water Pipelines – Enamel and Tape – Hot Applied
4.	AWWA C 205-18	Cement-Mortar Protective Lining and Coating for Steel Water Pipe – 4In. (100mm) and Larger – Shop Applied
5.	AWWA C 213-15	Fusion-Bonded Epoxy Coatings and Linings For Steel Water Pipe and Fittings
6.	AWWA C 216-15	Heat-Shrinkable Cross-Linked Polyolefin Coatings for the Exterior of Special Sections, Connections, and Fittings
7.	AWWA C 222-18	Polyurethane Coatings for the Interior and Exterior of Steel Pipe and Fittings
8.	AWWA C 602-17	Cement Mortar Lining of Water Pipelines in Place – 4In. (100mm) and Larger
9.	AWWA D 102-17	Coating Steel Water-Storage Tanks

C. International Organization for Standardization (ISO)

1.	ISO 8502-3-92	Assessment of dust on Steel Surface Prepared for Painting (Pressure-Sensitive Tape Method)

D. Master Painters Institute (API) Approved Product List (APL)

1. MPI – APL

E. NSF International (NSF)

1.	NSF 61-2016	Drinking Water System Components

F. SAE International

1.	SAE AMS-STD-595-17	Colors Used in Government Procurement

G. The Society for Protective Coatings (SSPC)/NACE International (NACE)

1.	SSPC-AB1-19	Mineral and Slag Abrasives

2.	SSPC-AB2-16	Cleanliness of Recycled Ferrous Metallic Abrasives
3.	SSPC-AB3-17	Newly Manufactured or Re-Manufactured Steel Abrasives
4.	SSPC-Guide 15-13	Field Methods for Retrieval and Analysis of Soluble Salts on Substrates and Other Nonporous Substrates
5.	SSPC-PA1-16	Shop, Field, and Maintenance Painting of Steel
6.	SSPC-PA2-22	Measurement of Dry Paint Thickness with Magnetic Gages
7.	SSPC-QP1-15	Evaluating Painting Contractors (Field Application to Complex Industrial Structures)
8.	SSPC-QP2-13	Evaluating Painting Contractors (Field Removal of Hazardous Coatings From Complex Industrial Structures)
9.	SSPC-QP3-10/AISC 420	Evaluating the Qualification of Shop Painting Contractors
10.	SSPC-SP1-16	Solvent Cleaning
11.	SSPC-SP2-04	Hand Tool Cleaning
12.	SSPC-SP3-04	Power Tool Cleaning
13.	SSPC-SP5/NACE 1-07	White Metal Blast Cleaning
14.	SSPC-SP10/NACE 2-15	Near-White Blast Cleaning
15.	SSPC-SP11-20	Power Tool Cleaning to Bare Metal, Level 3 minimum requirement
16.	SSPC-SP13/NACE 6-18	Surface Preparation of Concrete
17.	SSPC-SP16-10	Bruch-Off Blast Cleaning of Coated and Uncoated Galvanized Steel, Stainless Steel, and Non-Ferrous Metals
18.	SSPC-VIS1-12	Guide and Reference Photographs for Steel Surfaces Prepared by Abrasive Blast Cleaning
19.	SSPC-VIS3-07	Visual Standard for Power- and Hand-Tool Cleaned Steel
20.	SSPC-VIS4/NACE-VIS7-01	Guide and Reference Photographs for Steel Surfaces Prepared by Waterjetting

21.	SSPC-VIS5/NACE VIS9-01	Guide and Reference Photographs for Steel Surfaces Prepared by Wet Abrasive Blast Cleaning
22.	SSPC Paint Manual	Volume 1, Good Painting Practices, Fourth Edition 2002
23.	NACE SP 0188-06	Discontinuity (Holiday) Testing of New Protective Coatings on Conductive Substrates
24.	NACE SP 0274-11	High Voltage Electrical Inspection of Pipeline Coatings
25.	NACE SP 0287-16	Field Measurement of Surface Profile of Abrasive Blast Cleaned Steel Surfaces Using a Replica Tape
26.	NACE SP 0297-12	Maintenance Painting of Electrical Substation Apparatus Inducing Flow Coating of Transformer Radiators
27.	NACE TM 0174-02	Laboratory Method for the Evaluation of Protective Coatings and Linings Materials on Metallic Substrates in Immersion Service
28.	NACE RP 0288-88	Recommended Practices for Inspection of Linings on Steel and Concrete.
29.	NACE SP 0178-07	Detail, Finish, and Design Considerations for Immersion Service.

1.03 SUBMITTALS

A. Submit the following in accordance with Section 01 33 00 - Submittals.

B. RSN 09 96 20-1, Approval Data:

1. For each coating material:

   a. Manufacturer's product data, application, and Safety Data Sheets (SDS) sheets.

   b. Identification of "Items to be coated" including sub-letter and sub-number listed in Coating Tabulations.

   c. For use in potable water provide one of the following: National Sanitation Foundation (NSF) 61 certificate or Underwriter Laboratory (UL). Complete both tables provided below and include as part of submittal for NSF 61 and UL item(s)

Table 09 96 20A - Product Selection and Application

Reference Tabulation Number and Letter		Item to be coated	Item Size Range*	Coating Product Name	Selected Color

*Include size ranges in case of multiple items. Gallons for tanks, pipe diameter, pump size (diameter), etc.

Table 2: NSF/UL Certification Requirements and Limitations

Coating Product Name	Equipment Type**	Certified Structure Size Range	Certified Color(s)	Certified DFT Range	Reference*** (Website and/or Documents)

**State what equipment the NSF/UL requirements are for i.e. pumps, valves, pipes, tanks, etc.

***Provide website or documentation if website is not available

2. For each caulk and filler:
   a. Manufacturer's product data, application, and SDS sheets.
   b. Identification of areas of use including sub-letter and sub-number listed in Coating Tabulations.
3. For each substituted coating material "equal" to specified product in Coating Tabulation:
   a. List of not less than 5 similar successful material applications:
      1) Project name, location, type of structure, and application dates.
      2) Owner's name, address, and telephone number.
   b. Certification that material meets or exceeds specified requirements:
      1) Manufacturer's certification including technical representative's signature and date of signature.
      2) Independent laboratory's certified test reports.

C. RSN 09 96 20-2, Final Approval Data:

1. For each coating material [and thinner]:
   a. Purchase orders including order number, date, manufacturer's designated product name, batch number(s), and quantity purchased.
   b. Supplier's name, address, and phone number.

D. RSN 09 96 20-3, Paint Chip Samples:
1. Color chip samples approximately 4 by 6-inch.
2. Label each sample to include manufacturer's designated product name, color, and gloss.
3. Supply paint chip samples to the COR for selection and approval.

E. RSN 09 96 20-4, Qualifications:
1. Coating Contractor:
   a. Current AMPP-QP1 and/or AMPP-QP3 certifications to be requested as needed and at the discretion of the COR for Tabulations No. 02, 03, 04, and05
   b. List not less than 5 comparable completed jobs for each coating type including owner's name, address, and telephone numbers completed within the last five years.
2. Coating Applicator(s):
   a. List of not less than 5 comparable jobs for each coating type including owner's name, address, and telephone number.
   b. Provide one of the options below indicating personnel are qualified with relevant knowledge of surface preparation, coating materials, mixing, thinning and application practices:
      1) Statement from contractor.
      2) Statement from coating or equipment supplier
3. Coating Contractor Inspector(s) Provide one of the Following:
   a. Qualified to inspect specified coating materials by certifications. Provide one of the following:
      1) Current certification for NACE Level 3 Certified Coatings Inspector (CIP), SSPC Level 3 Protective Coatings Inspector (PCI), or AMPP Senior Certified Coating Inspector.
      2) Letter from contractor listing the personnel performing QC inspections, certified at a minimum as NACE Coating Inspector Level 1 (CIP), SSPC Protective Coatings Inspector (PCI), or AMPP Basic Coatings Inspector, as they report directly to a QC Contract or Third-Party Inspectors:
4. Third-Party Inspectors:

a. Current Level 3 certification for NACE Certified Coatings Inspector (CIP), or SSPC Protective Coatings Inspector (PCI), or AMPP Senior Certified Coating Inspector.

b. List not less than 5 years of comparable jobs including project description, location, and owner's name, address, and telephone numbers.

c. Provide calibrated inspection equipment and demonstrate the use if required by the COR.

F. RSN 09 96 20-5, Quality Control Plan:

1. Quality Control Manager:

a. Name and title.

2. Quality Control Procedure:

a. Quality control plan.

1) Applicator factory, shop, or field testing procedures shall be in accordance with these specifications, product manufacturer's written instructions, and NACE RP 0288, and ASTM D3276.

b. Procedure for addressing identified non-conformities.

G. RSN 09 96 20-6, Contractor Quality Testing Report:

1. Comprehensive report of daily quality control test reports.

1.04 DELIVERY, STORAGE, HANDLING

A. Deliver materials to jobsite in original, undamaged, unopened containers labeled with manufacturer's name, designated product name, batch number, date of manufacture, and any special instructions.

B. Deliver materials in containers not larger than 5 gallons as packaged by manufacturer unless suitable equipment is provided at jobsite to handle and thoroughly mix materials in larger containers.

C. Store coating materials and thinners in accordance with the manufacturer's recommendations, and as a minimum, store off the ground, under cover, and at 50- to 95-degrees Fahrenheit (F).

D. Do not use coating material which has exceeded manufacturer's specified storage stability period (shelf life).

1.05 AMBIENT CONDITIONS

A. Maintain environmental conditions to meet coating manufacturer's requirements during surface preparation, coating application, and curing period. Provide heating or cooling, and dehumidification as needed. Complete curing before placing the coating systems into service.

B. Coatings shall be applied when the substrate surface temperature is 5 degrees F or more above the dew point temperature and for at least 8 hours after application.

PART 2 PRODUCTS

2.01 EQUIPMENT

A. Surface preparation and spray application equipment:

1. Sized in accordance with coating manufacturer's recommendations.
2. Provide:
   a. Pressure gauges and pressure regulators.
   b. Air supply lines free from oil and moisture.

2.02 ABRASIVES

A. Mineral and slag abrasives: Meets SSPC-AB1, type I (natural minerals) and type II (slags), class A.

B. SSPC-AB2 for recycled cleanliness.

C. SSPC-AB3 Class I (steel) or II (iron) for angular shaped grit. Shot abrasives are not acceptable.

D. Commercially available products or processes to render the hazardous waste stream non-hazardous and not exceeding toxicity threshold limits.

1. Additive stabilizers for leachable toxic metal wastes are allowed, except elemental iron is not permitted.

2.03 COATINGS

A. Specified in Coating Tabulations:

1. Apply only one coating system per option in Coating Tabulations.
2. Apply compatible products of same manufacturer for coating system components.

B. Volatile Organic Compounds (VOC): Do not exceed maximum permitted by Federal, State, and local air pollution control regulations as supplied in container or by addition of thinner material.

C. Factory color or tint only. Do not color or tint at jobsite.

D. Use manufacturer's recommended thinners for coating materials.

E. Do not use accelerator products unless approved by COR.

2.04 FILLERS AND CAULKS

A. Caulks:

1. Coating manufacturer's standard or compatible caulk material.
2. Polyurethane, silicone, or silicone acrylic caulk material: Meets or exceeds ASTM C920 type S or M, grade NS, class 25, suitable for water immersion service.

B. Fillers:

1. Apply compatible products of same manufacturer as coating system components.
2. Approved fillers:
   a. Carboguard 501, as manufactured by Carboline, www.carboline.com.
   b. Devmat 142HB, as manufactured by International Paint, www.international-pc.com.
   c. PPG Amercoat 114 A, as manufactured by PPG, www.ppgpmc.com.
   d. Steel Seam FT910, as manufactured by Sherwin Williams, www.sherwin-williams.com.
   e. Surfacing Epoxy Series 215 as manufactured by Tnemec, www.tnemec.com.
3. Provide one of the above fillers, or equal with following essential characteristics:
   a. Coating manufacturer's standard filler material.
   b. Approved use by manufacturer.

2.05 MISCELLANEOUS MATERIALS

A. Deionized Water.

B. Chlor-Rid as manufactured by Chlor-Rid, www.Chlorid.com,

C. HoldTight 102 as manufactured by Holdtight Solutions, www.holdtight.com,

D. Chlor-Gone, as manufactured by Aquron, www.aquron.com

E. Provide one of the above salt removers, or equal with following essential characteristics:

1. Commercially available additive for soluble salt removal.
2. Water soluble.
3. Biodegradable.
4. Zero volatile organic compounds.

PART 3 EXECUTION

3.01 MAINTENANCE PAINTING

A. Previously Coated Surfaces:

1. Maintenance painting will frequently not require complete removal of all old coatings prior to repainting. However, all surface contaminates such as oil, grease, loose paint, mill scale, dirt, foreign matter, rust, mold, mildew, mortar, efflorescence, and sealers shall be removed to assure sound bonding to the tightly adhered old paint.
2. Glossy surfaces shall be clean and dull before repainting. Thoroughly washing and abrasive cleansers will clean and dull the surfaces in one operation, or wash and dull by sanding.
3. Check for paint compatibility by applying test patches of the selected coating system, covering 2 to 3 ft2. Allow to cure a minimum recommended by the coating's manufacturer and in accordance with ASTM D3359.

3.02 SHOP PAINTING

A. Shop coated and lined equipment shall be primed and finished in the shop and touched up in the field with identical coating materials after installation and in accordance with the coating's manufacturers standard surface preparation and application instructions.

3.03 FIELD PAINTING

A. Follow specified information in the Coating Tabulations and/or coating manufacturer's standard surface preparations and application instructions for field applied coatings.

3.04 COATING OF METALWORK EMBEDDED IN CONCRETE

3.05 GALVANIC AND DIELECTRIC ISOLATION

A. Galvanic isolation of dissimilar metals shall be required.

B. Dielectrically isolated ductile iron pipe, valves, and fittings.

C. Coatings shall not serve as the primary galvanic isolation.

3.06 PROTECTION OF ADJACENT SURFACES

A. Remove, mask, or otherwise protect items or surfaces not coated from contamination and damage during cleaning and coating operations.

B. Examples include protecting mating and machined surfaces, mechanical and electrical equipment (open or enclosed), instruction and similar plates, and wet and newly coated surfaces.

3.07 SURFACE PREPARATION

A. Remove or repair surface irregularities and impart profile as specified:

1. Welds:

   a. Welds: Smooth and continuous.

   b. Weld spatter, protrusions, laminations, slag, buckshot, and slivers. Remove and grind smooth in accordance with NACE SP 0178.

   c. Undercuts and porosity: Fill with weld material and grind smooth.in accordance with NACE-SP 0178.

   d. Projections, sharp edges, high points, fillets, and corners: Grind smooth to a radius of at least 1/16-inch.

2. Substrate defects:

   a. Pitting, gouges, scratches, porosity, and similar:

      1) Grind smooth.

      2) Defects exceeding 20-percent reduction in wall thickness require weld repairs.

3. Grind full length of edges and corners smooth to a radius of at least 1/16-inch.

B. Surface preparation method:

1. See Coating Tabulations.

   a. Method A: SSPC-SP1.

   b. Method B: SSPC-SP6/NACE 3.

   c. Method B-1:

      1) Repair of defective or damaged coated areas.

      2) For metal substrate:

         a) SSPC-SP1.

         b) SSPC-SP6/NACE 3.

         c) SSPC-SP11 where abrasive blasting is impractical.

            i. Level 3 shall be required with no amount of residue permitted in pit bottoms and a surface profile of 1-mil minimum unless a higher value is specified.

      3) For surrounding intact coating:

         a) Nominal 2- to 3-inch margin.

         b) SSPC-SP1.

c) Feather abrupt edges and around repair area by hand or power tool with non-woven pad into adjacent tightly bonded coatings.

d) Roughen or abrade surface in accordance with manufacturer's recommendations to achieve matted or lusterless finish.

d. Method C: SSPC-SP10/NACE 2.

e. Method C-1: Repair of defective or damaged coated areas.

1) For metal substrate:

a) SSPC-SP1.

b) SSPC-SP10/NACE 2.

c) SSPC-SP11 where abrasive blasting is impractical.

i. Level 3 shall be required with no amount of residue permitted in pit bottoms and surface a profile of 1-mil minimum unless a higher value is specified.

2) For surrounding intact coating (nominal 2- to 3-inch margin):

a) SSPC-SP1.

b) Feather abrupt edges and around repair area by hand or power tool with non-woven pad into adjacent tightly bonded coatings.

c) Roughen or abrade surface in accordance with manufacturer's recommendations to achieve matted or lusterless finish.

f. Method F (cast iron): NAPF 500-03-05, Blast Clean No. 4.

g. Method F1 (ductile iron pipe): NAPF 500-03-04.

h. Method G (stainless steel): ASTM A380.

i. Method H: SSPC-SP5/NACE 1.

j. Method T (cleaning concrete): SSPC-SP13/NACE 6 Surface Preparation of Concrete.

1) Surface must be clean, dry, and in sound condition. Remove all oil, dust, grease, dirt, loose rust, and other foreign material.

2) For surfaces prepared by water jetting/blasting, the SSPC-Vis 4/NACE No.7 standards for surface cleanliness should be followed.

3) The visual surface cleanliness must conform, at minimum, to the SSPC-SP WJ4 /NACE WJ4 condition directly after water jetting/blasting.

a) Water: Potable quality and may be heated.

b) After washing, allow surface to dry before subsequent coating.

c) Surfaces: Visually free of dust, dirt, animal waste, oil, grease, and other debris after pressure washing.

2. Compare prepared steel surfaces to following visual reference photographs for allowable visible contaminants and stains:

   a. SSPC-VIS1 for abrasive blast cleaning.

   b. SSPC-VIS3 for power and hand tool cleaning.

3. Assessment of dust contaminants:

   a. Perform clear tape test method in accordance with ISO 8502-3.

   b. Perform three tests per shift.

   c. Acceptance Criteria: Degree of cleanliness shall meet Class 3.

C. Surface profile:

1. Prepare as specified in Coating Tabulations.

2. Where not specified, prepare in accordance with manufacturer's instructions for metallic substrates or existing coating surfaces and service environment.

3. Where manufacturer's instructions do not specify a surface profile, prepare blasted surfaces to following profile:

   a. Atmospheric Service Environments: 1-mil or greater angular profile and less than specified millage of first applied coat.

   b. Burial and Immersion Service Environments: Angular profile 2-mil or greater and less than specified millage of first applied coat.

4. Inspect surface profile in accordance with NACE SP 0287:

   a. Use replica tape suitable for surface profile depth range.

   b. Perform at least two tests per 1,000-square feet.

D. Soluble salts:

1. Measure concentration of chlorides, nitrates and sulfates in accordance with SSPC Guide 15.

2. Perform at least two tests per 1,000-square feet of surface area. Include corrosion pit areas.

3. Acceptance criteria: Do not exceed 3-micrograms per square centimeter for chlorides and 5-micrograms per square centimeter for nitrates and sulfates.

E. Re-clean or perform additional surface preparation of contaminated surfaces before coating application.

3.08 COMPRESSED AIR EQUIPMENT

A. Keep air compressor and spray application equipment lines free of oil and moisture during work.

B. Compressed air quality:

1. Perform tests in accordance with ASTM D4285.
2. Perform test at the beginning of every shift.

3.09 FILLERS AND CAULK APPLICATION

A. Caulk areas including crevices, gaps, plate seams, skip welds, and conduit penetrations.

B. Fill areas including plate seams, and gaps at bolts and rivets.

C. Apply in a uniform texture, neatness, and color matched appearance.

D. Apply in accordance with manufacturer's instructions and achieve tight bond to substrate or previous coats.

3.10 COATING APPLICATION

A. Coating shall be done in a workmanlike manner to produce an even film of uniform thickness. The finished surfaces shall be free from runs, drops, ridges, waves, laps, sags, curtains, brush marks, and variations in color, texture, and finish.

B. Shop coated and lined equipment shall be primed and finished in the shop and touched up in the field with identical coating materials after installation and in accordance with the coating manufacturer's application instructions.

C. Follow specified systems in the Coating Tabulations and coating manufacturer's application instructions for applied coatings. In event of a conflict, the more stringent requirement shall apply.

D. Stripe coat:

1. Brush apply stripe coat to each coat applied.
2. Apply stripe coat prior to spray application of the primer, when practical.
3. Apply to edges, corners, interior angles, pits, plate seams, crevices, rivets, nuts, threads, bolts, washers, welds, and similar features.

E. Apply number of coats and coating thickness specified in Coating Tabulations.

1. Alternate coat colors to differentiate between coats.
2. Apply in accordance with manufacturer's instructions.
3. Apply in accordance with SSPC PA1.

F. Prevent overspray or dry spray. When such conditions occur, clean surfaces prior to application of subsequent coats.

G. Re-clean contaminated surfaces between coats.

H. Dry Film Thickness (DFT):

1. After each coat, inspect hardened coating system for DFT compliance in accordance with SSPC PA2.
2. Acceptance Criteria: no single spot measurement less than 80 percent minimum or 120 percent maximum specified.

I. Discontinuity (Holiday) Testing:

1. Inspect in accordance with NACE SP 0188:
   a. Use maximum test voltage for DFT as recommended by coating manufacturer to prevent coating damage.
2. Inspect pipeline coatings in accordance with NACE SP 0274:
   a. Use maximum test voltage for any DFT as recommended by coating manufacturer to prevent coating damage.

J. Coating Adhesion:

1. Test in accordance with ASTM D4541 at the direction of the COR.

3.11 CONTRACTOR FIELD QUALITY TESTING

A. Inspection Equipment:

1. Calibrate inspection devices and equipment in accordance with the manufacturer's instructions.
2. Verify calibration prior to every use.

B. Qualified personnel shall conduct tests and sign reports.

1. Perform tests in presence of the COR:
2. Provide rigging for COR to observe inspections.

C. Make daily reports for review by the COR, including:

1. Date of work.
2. Description of areas and work performed.
3. Environmental conditions.
4. Results from the following quality control tests:
   a. Soluble salt.
   b. Surface profile.

c. Visual comparison of prepared surfaces.

d. Assessment of dust contaminants.

e. Compressed air quality.

f. Dry film thickness (DFT).

g. Discontinuity (Holiday) testing.

h. Coating adhesion testing (when directed by the COR).

D. Final inspection will take place after repairs, but before placing into service.

3.12 REPAIR AND REMEDIAL WORK

A. Repair defective or damaged areas of coatings in accordance with coating manufacturer's recommendations.

3.13 COATING TABULATIONS

Tabulation No. 1
Items to be coated – Commercial or manufacturer's product with standard applied coating system: a. Air compressors. b. Air valve assemblies. c. Electrical equipment, cabinets, and enclosures. d. Flowmeters. e. Medium Voltage switch gear. f. Insulated metal wall and roof panels. g. Insulated metal roof hatches and removable roof covers. h. Pump motors. i. Building roof access ladders. j. Valve actuators and motor operators. k. Fire Extinguisher's.
Manufactures Standard Finish, Factory Finish or Shop Applied Permanent Coating System: 1. Commercial or manufacturer's standard surface preparation and permanent coating system for intended installation locations. 2. Items subject to sunlight shall be top-coated with ultraviolet (UV) stable materials. 3. Permanent coating system shall have 8-year corrosion-free protection without significant defects stored in atmospheric exposure. 4. Color and gloss: Standard color unless specific color is otherwise specified in color schedule. 5. Unless otherwise specified, unexposed surfaces that require coatings, such as interior of cabinets, enclosures, and equipment, shall be given manufacturer's standard permanent coated finish.
Field Repair: Repair damaged areas of coated surfaces with compatible materials to equal thickness and color match of undamaged areas, unless otherwise tabulated herein.

Tab AE-05.DOCX

Tabulation No. 2
Items to be coated: a. Guard posts. Coat safety yellow and gloss. b. Louvers and vent-covers. c. Metal surfaces of doors, doorframes, and door shoes. d. Roof access ladders that do not have manufacturer's standard finish. e. Structural steel and fasteners or the buildings.

Tabulation No. 2

Coating Methods Options:

1. Commercial components shall be coated with manufacture's standard surface preparation and applied permanent coating system that meets the following:
   a. 8-year corrosion-free protection without significant defects stored in atmospheric exposure.
   b. Color and gloss shall be manufacturer's standard unless specified below or in color schedule.
   c. Unexposed interior surfaces of cabinets, enclosures, and equipment shall be given manufacturer's standard permanent coated finish.
2. Shop or field coating to meet one or more of following application alternatives:
   a. Alternative 1 – Baked-on, coil, extrusion, or fusion bonded that consists of 1 or more coats of UV stable system.
   b. Alternative 2 – Complete shop applied permanent coating system that consists of 1 prime coat and 2 finish coats for Alkyds and Acrylics, or 1 prime coat and 1 finish coat for Epoxy/Polyurethanes.
   c. Alternative 3 – Shop applied primer and field finish coating system that consists of 2-mil DFT primer, minimum, with 2 field coats compatible with shop applied primer as specified below in coating material options.
3. Repair damaged areas with same shop applied primer and finish coat materials or compatible materials.

Notes:

1. Coating galvanized steel with an alkyd/silicone alkyd system requires compatible primer recommended by coating manufacturer.
2. The following pre-surface preparations shall be performed by galvanizing-shop if galvanizing is to be coated:
   a. After metalwork has been galvanized and before applying coatings, remove zinc oxides by one of following:
      (1) Acidic acrylic passivation solution.
      (2) Phosphate quenching.
      (3) Sweep blasting.
      (4) Wash primer.
   b. After removal of zinc oxides on galvanized surface, repair small damaged galvanized areas with zinc-rich coating compatible with selected finish coat; except that zinc-rich coatings are not permitted if phosphate quenching method is used. Dry film thickness shall be equal to galvanized nominal thickness.

1. Remove stabilizing or storage treatments on galvanized metalwork by one of following:
   (1) SSPC-SP1 and sweep blasting
   (2) Manufacturer's compatible wash treatment.
2. Stainless-steel, aluminum, brass, and non-metallic parts need not be painted.

Coating Materials – Option 1 Alkyd/Silicone Alkyd	Number and Thickness of Coats	Surface Preparation Method

Tabulation No. 2		
Prime or spot repair coats: Carboline: Carbocoat 115 VOC/ Carbocoat 30R International Paint: Devguard 4160/ Devshield 877 PPG: KL6040/ KLF Series Silicone Alkyd Sherwin Williams: Kem Kromik Universal Primer/ Steel Master 9500 Tnemec: Chem-Prime HS Series 37H/ Versatone Series 82HS Color and gloss: See Color Schedule	1 or more prime coats apply at 2 to 3 mils DFT per coat, plus stripe coats. 2 or more finish coats apply at 2 to 3 mils DFT per coat. Total system excluding stripe coats: 6-mil DFT, minimum 9-mil DFT, maximum	Undamaged coated surfaces to receive additional coats use Method A followed by: Uncoated surfaces: Method B Damaged coated surfaces: Method B-1 where abrasive blasting is impractical. Follow manufacturer's surface preparation instructions and application instructions to apply subsequent coats.
Coating Materials – Option 2 Waterborne Acrylic	Number and Thickness of Coats	Surface Preparation Method
Prime or spot repair: Carboline: Carbocrylic 3358/ Carbocrylic 3359 International Paint: Devflex 4020PF DTM/ Devflex 4216HP Sherwin Williams: Pro-Industrial Procryl Universal Acrylic Primer series B66-W00310/Pro-	1 or more prime coats apply at 2 to 3 mils DFT per coat, plus stripe coats. 2 or more finish coats apply at 2 to 3 mils DFT per coat. Total system excluding stripe coats: 6-mil DFT, minimum 9-mil DFT, maximum	Undamaged coated surfaces to receive additional coats use Method A followed by: Uncoated surfaces: Method B Damaged coated surfaces: Method B-1 where abrasive blasting is impractical. Galvanizing: SSPC-SP7, SSPC-SP3, or manufacturer's chemical treatment. Follow manufacturer's surface preparation

Tabulation No. 2		
Industrial Procryl DTM Acrylic. Color and gloss: See Color Schedule		instructions and application instructions to apply subsequent coats.
Coating Materials – Option 3 Epoxy/Polyurethane	Number and Thickness of Coats	Surface Preparation Method
Carboline: Carboguard 691/ Carbothane 134 HB, HG, or VOC International Paint: Intergard 475HS/Interthane 870 UHS PPG: Amerlock 2 or 400/ Amercoat 450H or Amershield VOC Sherwin Williams: Duraplate 235 or Macropoxy 646/ Hi solids polyurethane or 250 Tnemec: Epoxoline Series N69 or V69/ Endura-shield 1075 Color and gloss: See Color Schedule	1 or more prime coats apply at 4 to 6 mils DFT per coat, plus stripe coats. 1 or more finish coats apply at 3 to 4 mils DFT per coat. Total system excluding stripe coats: 7-mil DFT, minimum 10-mil DFT, maximum	Undamaged coated surfaces to receive additional coats use Method A followed by: Uncoated surfaces: Method B Damaged coated surfaces: Method B-1 where abrasive blasting is impractical. Follow manufacturer's surface preparation and application instructions to apply subsequent coats.

Tabulation No. 2	
PERFORMANCE REQUIREMENTS:	
Testing Protocol	Acceptance Criteria
Abrasion resistance, ASTM D4060, CS-17 wheel, 1,000 cycles, 1-kg load:	Alkyd or Acrylic: 250 milligram loss or less Epoxy/Polyurethane: 100 milligram loss or less
Direct impact, ASTM D2794:	40 inch-pounds for alkyd/silicone alkyd 140 inch-pounds for waterborne acrylics 30 inch-pounds for epoxy/polyurethane:
Pulloff adhesion, ASTM D4541, annex A2, type II tester:	250 psi or greater for alkyd/silicone alkyd 500 psi or greater for waterborne acrylics 800 psi or greater for epoxy polyurethane
Cyclic testing salt fog/UV, ASTM D5894:	1/4-inch or less undercutting at 3,000 hours.
QUV accelerated weathering test, ASTM D4587:	Passes 3,000-hour test with no blisters evident on either scribed or unscribed sides, or color difference, ASTM D2244.

Tab AE-02.DOCX

Tabulation No. 3		
Items to be coated: a. Exterior surfaces of exposed outdoor steel water storage tanks and associated appurtenances. b. Exterior surfaces of exposed indoor and outdoor ferrous piping, couplings, fittings, and valves. c. Bollards for cathodic protection test stations.		
1) Coat all fasteners after installation.		
Coating Material – Option 1 Zinc Rich Epoxy Primer/Epoxy/Polysiloxane	Number and Thickness of Coats	Surface Preparation Method
Carboline: Carbozinc 859/ Carboguard 691/ Carboxane 2100 International Paint: Interzinc 52/ Intergard 475HS/ Interfine 979 PPG: Amercoat 68HS or Amercoat 68HS VOC/ Amerlock 2 or 400/ PSX 700 Sherwin Williams: Zinc Clad III HS or 100/ Duraplate 235 or Macropoxy 646/ Polysiloxane XLE 80 Color and gloss: See Color Schedule	1 or more prime coats apply at 3 to 5 mils DFT per coat, plus stripe coats. 1 or more intermediate coats apply at 6 to 8 mils DFT per coat. 1 or more finish coats apply at 3 to 7 mils DFT per coat. Total system excluding stripe coats: 12-mil DFT, minimum 20-mil DFT, maximum	Method A followed by: Uncoated surfaces: Method C Damaged coated surfaces: Method C-1 where abrasive blasting is impractical. Follow manufacturer's surface preparation and application instructions to apply subsequent coats.
Coating Material – Option 2 Zinc Rich Epoxy Primer/Epoxy/Polyurethane	Number and Thickness of Coats	Surface Preparation Method

Tabulation No. 3		
Carboline: Carbozinc 859/ Carboguard 691/ Carbothane 134 HB, HG, or VOC International Paint: Interzinc 52/ Intergard 475HS/ Interthane 870 UHS PPG: Amercoat 68HS or 68 VOC/ Amerlock 2 or 400 Amercoat 450H or Amershield VOC Sherwin Williams: Zinc Clad III HS or 100/ Duraplate 235 or Macropoxy 646/ Hi solids polyurethane or 250 Tnemec: Tneme-zinc 90-97/ Epoxoline Series N69 or V69/ Endura-shield 1075 Color and gloss: See Color Schedule	1 or more prime coats apply at 3 to 5 mils DFT per coat, plus stripe coats. 1 or more intermediate coats apply at 6 to 8 mils DFT per coat. 1 or more finish coats apply at 3 to 5 mils DFT per coat. Total system excluding stripe coats: 12-mil DFT, minimum 18-mil DFT, maximum	Method A followed by: Uncoated surfaces: Method C Damaged coated surfaces: Method C-1 where abrasive blasting is impractical. Follow manufacturer's surface preparation and application instructions to apply subsequent coats.

Tabulation No. 3

PERFORMANCE REQUIREMENTS:

Testing Protocol	Acceptance Criteria
Abrasion resistance, ASTM D4060, CS-17 wheel, 1,000 cycles, 1-kg load:	Epoxy/polysiloxane: 80 milligram loss or less. Epoxy/polyurethane: 100 milligram loss or less.
Direct impact, ASTM D2794:	Epoxy/polysiloxane: 40 inch-pounds. Epoxy/polyurethane: 30 inch-pounds.
Pulloff adhesion, ASTM D4541, annex A2, type II tester:	Epoxy/polysiloxane: 1,000 psi or greater, Epoxy polyurethane
Cyclic testing salt fog/UV, ASTM D5894:	1/4-inch or less undercutting at 3,000 hours
QUV accelerated weathering test, ASTM D4587:	Passes 3,000-hour test with no blisters evident on either scribed or unscribed sides, or color difference ASTM D2244

Tab AE-07.DOCX

Tabulation No. 4

Items to be coated: For potable water service, NSF 61 approved coating:

a. Interior surfaces of steel water storage tanks.
b. Interior ferrous surfaces of piping.
c. Interior ferrous surfaces of pipe fitting and mechanical pipe connectors.
d. Interior ferrous surfaces of pumps
e. Interior ferrous surfaces of valves

Notes:

1. Coat all fasteners
2. Materials listed below require certified NSF 61 approval for contact with potable water.
3. Do not coat stainless-steel, bronze, or non-metallic surfaces.
4. Do not coat mating surfaces, machine surfaces, seals, and surfaces where coating could interfere with proper operation or fit.
5. Coat exposed machined surfaces after assembly.

OPTION 1 - Fusion bonded epoxy in accordance with either AWWA C213 interior and exterior of steel pipe and/or fittings or AWWA C116 interior and exterior of ductile iron or grey-iron pipe and/or fittings.

Tabulation No. 4		
Coating Materials – Option 2 Epoxy	Number and Thickness of Coats	Surface Preparation Method
Carboline: Carboguard 691 PPG (Ameron): Amerlock 2 Sherwin Williams: Duraplate 235 PW Tnemec: Pota-Pox Series 20 Color and gloss: Interior - manufacturer's standard color and gloss. Exterior – light grey or light tan.	3 or more base coats apply at 6 to 8 mils DFT per coat, plus stripe coats. Total base coat system excluding stripe coats: 18-mil DFT, minimum 24-mil DFT, maximum	Method A followed by: For cast-iron or ductile-iron: Method F or F-1 For steel: Method H For damaged coated surfaces: Method C-1 where abrasive blasting is impractical. 2-4 mil surface profile. Follow manufacturer's surface preparation and application instructions to apply subsequent coats.
Coating Materials – Option 3 High Solids Epoxy	Number and Thickness of Coats	Surface Preparation Method
Sherwin Williams: Sherplate PW Epoxy Color and gloss: Interior – manufacturer's standard color and gloss. Exterior – light grey or light tan.	1 or more base coats apply at 30 to 40 mils DFT per coat, plus stripe coats. Total base coat system excluding stripe coats: 30-mil DFT, minimum 40-mil DFT, maximum	Method A followed by: For cast-iron or ductile-iron: Method F or F-1 For steel: Method H For damaged coated surfaces: Method C-1 where abrasive blasting is impractical. 2-4 mil surface profile. Follow manufacturer's surface preparation and application instructions to apply subsequent coats.
Coating Materials – Option 4 100% Solids Epoxy	Number and Thickness of Coats	Surface Preparation Method

Tabulation No. 4		
International (Enviroline): Enviroline 230 Raven Lining Systems: AquataPoxy A-6 Color: Interior - manufacturer's standard color and gloss. Exterior – light grey or light tan.	1 or more base coats apply at 30 to 50 mils DFT per coat, plus stripe coats. Total coat system excluding stripe coats: 30-mil DFT, minimum 50-mil DFT, maximum	Method A followed by: For cast-iron or ductile-iron: Method F or F-1 For steel: Method H For damaged coated surfaces: Method C-1 where abrasive blasting is impractical 2-4 mil surface profile. Follow manufacturer's surface preparation and application instructions to apply subsequent coats.
Coating Materials – Option 5 100% Solids Epoxy	Number and Thickness of Coats	Surface Preparation Method
Carboline: Plasite 4500 S NSP Products: NSP 120 Sherwin Williams: Dura-Plate UHS Color and gloss: Interior - manufacturer's standard color and gloss. Exterior – light grey or light tan.	2 or more base coats apply at 10 to 16 mils DFT per coat. Total coating system excluding stripe coats: 20-mil DFT, minimum 32-mil DFT, maximum	Method A followed by: For cast-iron or ductile-iron: Method F or F-1 For steel: Method H For damaged coated surfaces: Method C-1 where abrasive blasting is impractical. 2-4 mil surface profile. Follow manufacturer's surface preparation and application instructions to apply subsequent coats.

Tabulation No. 4	
PERFORMANCE REQUIREMENTS:	
Testing Protocol	Acceptance Criteria
Fresh/deionized water immersion test, ASTM D870:	Passes, 2-years test with aerated water held at ambient temperature with no blisters evident on either scribed or unscribed sides.
Dilute Harrison immersion test, Modified ASTM D870:	Passes, 2-years test with aerated water held at ambient temperature with no blisters evident on either scribed or unscribed sides.
Abrasion resistance, ASTM D4060, CS-17 wheel, 1,000 cycles, 1-kg load:	Epoxy: 100 milligram loss or less.
Direct impact, ASTM D2794:	30 inch-pounds.
Pulloff adhesion, ASTM D4541, annex A2, Type II tester:	1,000 psi or greater.
Cyclic testing salt fog/UV, ASTM D5894:	1/4-inch or less undercutting at 3,000 hours.
Cathodic disbondment, ASTM G8:	No disbondment at 120-day test.

Tab IE-03.DOC

Tabulation No. 05
Items to be coated - Shop or field applied exterior coatings for burial exposure: 1. Exterior surfaces of buried steel pipe 2. Exterior surfaces of buried valves 3. Exterior surfaces of buried pipe fittings
Notes: 1. Do not paint aluminum-brass, bronze, and stainless-steel metalwork. 2. Do not coat seals, mating surfaces, and machined surfaces where paint could interfere with operation or fit. Coat exposed machined surfaces after installation. 3. Coated ferrous surfaces permanently exposed to direct sunlight shall require a compatible UV resistant protective topcoat. 4. Coat miscellaneous metalwork not otherwise tabulated. 5. Coat all associated fasteners to include nuts, bolts, washers, and exposed anchors.

COATING OPTIONS		
OPTION 1 - Polyurethane exterior in accordance with AWWA C222.		
OPTION 2 - Fusion bonded epoxy in accordance with either AWWA C213 interior and exterior of steel pipe and/or fittings or AWWA C116 interior and exterior of ductile iron or grey-iron pipe and/or fittings.		
OPTION 3 - Coating materials Epoxy	Number and thickness of coats	Surface preparation method
Carboline: Carboguard 691 Sherwin Williams: Duraplate 235 Tnemec: Epoxoline Series N69 or V69 PPG: Amercoat 235 International: Bar Rust 235 Color and gloss: see Color Schedule	3 or more base coats apply at 6 to 8 mils DFT per coat, plus stripe coats. Total base coat system excluding stripe coats: 18-mil DFT, minimum 24-mil DFT, maximum	Method A followed by: For ductile-iron: Method F For steel: Method H 2.5-4 mil surface profile Follow manufacturer's surface preparation and application instructions to apply subsequent coats

OPTION 4 – 100% Solids Epoxy	Number and thickness of coats	Surface preparation method
Carboline Plasite 4500 Tnemec: Series 431 Duromar: HPL-2510 PPG Amercoat 113 International Paint: Enviroline 376F-30LT NSP Products: NSP 120 Sherwin Williams: Dura-Plate UHS	Follow coating manufacturer's instructions for number of coats and thickness per coat. Total coating system excluding stripe coats: 20-mil DFT, minimum 40-mil DFT, maximum	Method A followed by: For ductile-iron: Method F For steel: Method H 2.5-4 mil surface profile Follow manufacturer's surface preparation and application instructions to apply subsequent coats

Coating materials – Option 6 Coal Tar Epoxy	Number and thickness of coats	Surface preparation method
Carboline: Bitumastic 300M PPG: Amercoat 78HB Sherwin Williams: Targuard Tnemec: Tneme-Tar 46H-413	2 or more base coats, apply at 6 to 10 mils DFT per coat, plus stripe coats. Total system excluding stripe coats: 12-mil DFT, minimum 20-mil DFT, maximum	Method A followed by: For ductile-iron: Method F For steel: Method H Achieve 2.5 to 4-mil surface profile, minimum Follow manufacturer's surface preparation and application instructions to apply subsequent coats

PERFORMANCE REQUIREMENTS	
Testing Protocol	Acceptance Criteria
Fresh/deionized water immersion test, ASTM D870:	passes, 2 years test with aerated water held at ambient temperature with no blisters evident on either scribed or unscribed sides.
Dilute Harrison immersion test, Modified ASTM D870:	passes, 2 years test with aerated water held at ambient temperature with no blisters evident on either scribed or unscribed sides.
Abrasion resistance, ASTM D4060, CS-17 wheel, 1,000 cycles, 1-kg load:	100 milligram or less
Direct impact, ASTM D2794:	30 inch-pounds
Pulloff adhesion, ASTM D4541, annex A2, type II tester:	1000 psi or greater
Cyclic testing salt fog/UV, ASTM D5894:	1/4 inch or less undercutting at 3000 hrs
Cathodic disbondment, ASTM G8:	1/4 inch or less disbondment at 120-day test

Tab BE-04.DOCX

Tabulation No. 6
Repair of Damaged Galvanizing: a. Hatch covers b. Gratings c. Ladders d. Handrails and safety railings e. Platforms f. Chain link fencing g. Damaged galvanized surfaces not otherwise tabulated
Repair damaged galvanized surfaces in accordance with ASTM A780. Repair materials containing cadmium and lead are not permitted.

Tab AE-11.DOCX

Tabulation No. 7		
Items not to be coated and to receive a uniform passivation layer: a. Stainless-steel-clad surfaces not otherwise tabulated herein		
Note: 1. Do not coat stainless-steel items listed above. Stainless-steel surfaces to receive uniform passivation. Clean and restore uniform passivation layer on damaged, contaminated, or depassivated stainless-steel surfaces by methods listed below.		
Degree of Surface Contamination	ASTM A380* Surface Preparation Method**	ASTM A380* Surface Preparation Test**
Local heavily contaminated surface areas: Contaminated by free iron, oxide scale, or rust related contaminates caused by field welding or cutting.	Method 5. - "Descaling," General: Method 5.3 - "Mechanical Descaling" by grinding, and/or Method 6.3 - "Cleaning of Welds and Weld-Joint Areas."	Method 7.2 - "Gross Inspection." Methods 7.2.5 - "Tests for Free Iron: Gross Indications."

Tabulation No. 7		
General contaminated surface areas: Contaminated by free iron, oxide scale, or rust related contaminates	Method 5. - "Descaling," General: Method 5.2 - "Chemical Descaling" Method 5.2.2.(1) - "Chemical Descaling" by swab or spray wetting the surfaces and/or Method 5.3 - "Mechanical Descaling" by grinding	Method 7.2 – “Gross Inspection” Method 7.2.5 – “Tests for Free Iron: Gross Indication”
General contaminated surface areas: Contaminated by grease, oil, residual chemical films, or other non-free iron related contaminates	Method 6.2.10 - "Water Jetting" and/or Method 6.4 - "Final Cleaning, or Passivation, or Both," wiping with a clean, solvent-moistened cloth	Method 7.2 - "Gross Inspection" Method 7.2.2 - "Wipe Tests" Where films are not detectable under white light conditions, use: Method 7.3 - "Precision Inspection" Method 7.3.2 - "Black Light Inspection"

* Other ASTM A380 methods may be used instead of above specified surface preparation methods and inspection procedures.

** Do not damage attached parts, adjacent parts, or materials by field cleaning and passivation methods of stainless-steel.

Tab AE-14.DOCX

Tabulation No. 08		
Items to be coated: a. Exposed surfaces of building foundation ridged insulation and stucco.		
Coating Materials	Number and Thickness of Coats	Surface Preparation Method
Latex, Exterior, High Build, No. 40 Color and gloss: See Color Schedule	Follow manufacturer's instructions for number of coats and thickness per coat. Minimum total thickness is 10 mils, DFT.	Method T
Approved Materials: Materials from Master Painters Institute – Approved Products List (www.paintinfo.com)		

Tab NM-04.DOCX

Tabulation No. 09		
Items to be coated or repaired: a. Spot repairs to damaged pipe		
Notes: 1.		
Coating materials – Option 1	Number and Thickness of Coats	Surface Preparation Method
Select Polyurethane coating for burial in accordance with the AWWA C222 Polyurethane Standard.	1 or more base coats. Apply at 30 to 40 mils DFT per coat, plus stripe coats. Total system excluding stripe coats: 30-mil DFT, minimum 40-mil DFT, maximum	Method A followed by: For cast-iron or ductile iron: NAPF 500-03-05 Blast Clean No. 4 For steel: Method H Achieve 3 to 5-mil surface profile, minimum Follow manufacturer's surface preparation and application instructions to apply subsequent coats
PERFORMANCE REQUIREMENTS:		

Tabulation No. 09	
Testing Protocol	Acceptance Criteria
Flexibility, ASTM D522, 180-degree bend over 3-inch mandrel:	passes, no cracking or delamination
Impact resistance, ASTM G14:	75 in lbs, minimum
Abrasion resistance, ASTM D4060, CS-17 wheel, 1,000 cycles, 1-kg load:	100 milligram loss or less
Water Absorption, ASTM D570:	2.0 percent maximum
Hardness, ASTM D2240 Shore D:	65 minimum
Pulloff adhesion, ASTM D4541:	1,500 psi or greater
Cathodic disbondment, ASTM E95:	1/2-inch maximum 28-day test

Tab BE-01.DOCX

3.14 COLOR SCHEDULE

A. Colors and glosses of finished coats:

1. To be selected and approved by COR.

B. Color and gloss to meet one or more of following:

1. Munsell Color.
2. SAE AMS-STD-595.
3. Manufacturer's standard color.

C. Gloss abbreviations:

1. G - Full Gloss.
2. SG - Semigloss.
3. F - Flat.

D. Color schedule table:

1. Numbers listed in the "Tabulation No." column correspond to "Items to be coated" listed in Coating Tabulations.

Table 09 96 20A – Color Schedule

Tabulation No.	Item Surface	Color	Color No.	Gloss
1	Manufacturer's Standard Color and Gloss			
3	a. Exterior surfaces of outdoor steel water storage tanks and associated appurtenances. b. Exterior surfaces of exposed outdoor ferrous piping, couplings, fittings, and valves.	Beige	Munsell 2.5Y8/4	SG or G
3	c. Bollards for cathodic protection test stations	NTUA Blue		

END OF SECTION

This page intentionally left blank.

SECTION 22 11 35
PREFABRICATED PUMP STATION

PART 1 GENERAL

1.01 MEASUREMENT AND PAYMENT

A. Prefabricated Pump Station Design:

1. Payment: Lump sum price offered in the Price Schedule.

B. Prefabricated Pump Station Fabrication:

1. Payment: Lump sum price offered in the Price Schedule.

C. Prefabricated Pump Station Installation:

1. Payment: Lump sum price offered in the Price Schedule.

D. Prefabricated Pump Station Field Testing and Commissioning:

1. Payment: Lump sum price offered in the Price Schedule.

1.02 DEFINITIONS

A. AOR: Allowable Operating Region.

B. Cv: Valve Flow Coefficient.

C. IO&M: Installation, Operation, and Maintenance.

D. NPSH: Net Positive Suction Head.

E. NPSHa: Net Positive Suction Head Available.

F. NPSHr: Net Positive Suction Head Required.

G. ODP: Open Drip Proof.

H. ODPG: Open Drip Proof Guarded.

I. POR: Preferred Operating Region.

J. Pumping unit: One complete pump and motor assembly.

K. RCF: Reed Critical Frequency.

L. RTD: Resistive Temperature Detector.

M. VFD: Variable Frequency Drive.

N. WSEL: Water Surface Elevation Level.

1.03 REFERENCE STANDARDS

A. American Concrete Institute (ACI)

1.	ACI 318-14	Building Code Requirements for Structural Concrete
2.	ACI 301-16	Structural Concrete

B. American Society of Civil Engineers (ASCE)

1.	ASCE 7-16	Minimum Design Loads for Buildings and Other Structures

C. American Society of Heating, Refrigeration, and Air Conditioning Engineers (ASHRAE)

1.	ASHRAE 15-2019	Safety Standard for Refrigeration Systems
2.	ASHRAE 62.1-2019	Ventilation for Acceptable Indoor Air Quality
3.	ASHRAE 90.1-2016	Energy Standard for Buildings Except Low-Rise Residential Buildings

D. ASTM International (ASTM)

1.	ASTM A53-24	Pipe, Steel, Black and Hot-Dipped, Zinc-Coated, Welded and Seamless
2.	ASTM A139-22	Electric-Fusion (Arc)-Welded Steel Pipe (NPS 4 and Over)
3.	ASTM E1780-12(2021)	Measuring Outdoor Sound Received from a Nearby Fixed Source

E. International Code Council (ICC)

1.	IBC-2018	International Building Code
2.	IECC-2018	International Energy Conservation Code
3.	IFC-2018	International Fire Code
4.	IMC-2018	International Mechanical Code
5.	IPC-2018	International Plumbing Code

F. United States Access Board

1.	ABA-2015	Architectural Barriers Act (ABA) Standards

G. American National Standards Institute (ANSI), Hydraulic Institute (HI)

1.	ANSI/HI 9.6.3(2017)	Rotodynamic Pumps – Guideline for Operating Regions
2.	ANSI/HI 9.6.4(2016)	Rotodynamic Pumps for Vibration Measurement and Allowable Values
3.	ANSI/HI 9.6.6(2016)	Rotodynamic Pumps for Pump Piping
4.	ANSI/HI 9.8(2018)	Rotodynamic Pumps for Pump Intake Design
5.	ANSI/HI 14.3(2019)	Rotodynamic Pumps for Design and Application
6.	ANSI/HI 14.6(2016)	Rotodynamic Pumps for Hydraulic Performance Acceptance Tests
7.	ANSI/ISA 5.1-2009	Instrumentation Symbols and Identification
8.	ANSI/NSF 61-2021	Drinking Water System Components – Heath Effects
9.	ANSI/NSF 372-2022	Drinking Water System Components – Lead Content

H. American Society of Mechanical Engineers (ASME)

1.	ASME BPVC-IX (2023)	Boiler and Pressure Vessel Code - Section IX - Welding and Brazing Qualifications

I. American Water Works Association (AWWA)

1.	AWWA C206-	
2.	AWWA C542-16	Electric Motor Actuators for Valves and Slide Gates
3.	AWWA M11-Fifth Edition	Steel Water Pipe: A Guide for Design and Installation

J. American Welding Society (AWS)

1.	AWS D1.1/D1.1M-2020	Structural Welding Code - Steel

K. National Electrical Manufacturers Association (NEMA)

1.	NEMA 250-2014	Enclosures for Electrical Equipment (1000 Volts Maximum)
2.	NEMA MG 1-2021	Motors and Generators

L. National Fire Protection Association (NFPA):

1.	NFPA 10-2022	Standard for Portable Fire Extinguishers
2.	NFPA 70-2023	National Electrical Code

3. NFPA 101-2015 Life Safety Code

M. InterNational Electrical Testing Association (NETA)

1. ANSI/NETA ATS-2025 Standard for Acceptance Testing

N. Institute of Electrical and Electronics Engineers (IEEE)

1. IEEE 142-2007 Recommended Practice for Grounding of Industrial and Commercial Power systems
2. IEEE 519-2014 Recommended Practice and Requirements for Harmonic Control in Electric Power Systems Standard
3. IEEE 1100-2005 Recommended Practice for Powering and Grounding Electrical Equipment
4. IEEE/NESC C57.13-2016 Standard Requirements for Instrument Transformers

1.04 SUBMITTALS

A. Submit the following in accordance with Section 01 33 00 – Submittals.

B. For the 30, 60, 90, and 100 Percent Design submittals the required design information may be submitted earlier in the submittal process.

1. For example, required 90 Percent Design information may be submitted with 30 or 60 Percent Design.
2. Indicate required design information was approved under earlier submittals on the transmittal letter.
3. Detail changes to Design submittal order in the transmittal letter.

C. RSN 22 11 35-1, Qualifications:

1. Resumes of designer and manufacturer.
   a. Pump and Motor Manufacturer Qualifications.
   b. Pump and Motor Manufacturer Erection Engineer Qualifications.
   c. Millwright Qualifications.

D. RSN 22 11 35-2, 30 Percent Design:

1. Drawings:
   a. General arrangement and preliminary cross sections. Include, at a minimum:
      1) Preliminary building code analysis:
         a) Identify applicable code editions

b) Occupancy classification

c) Construction type

2) Plan view:

a) Building dimensions.

b) Locate equipment and components supplied with the pump station or required in the pump station.

3) Interior/Exterior elevation views:

a) Building dimensions and elevations.

b) Locate equipment and components supplied with the pump station or required in the pump station.

c) Locations of doors and louvers.

2. Pumps: Performance Curves.

3. Piping:

a. Pipe size, dimensions, and spacing.

b. Pipe schedules, pipe classes or pipe thickness.

c. Pipe support details.

d. Commercial product data for relevant products listed in paragraph 1.06 Pump Station Requirements.

e. Include inlet and outlet piping connections to match drawings 1695-D-62366 and 1695-D-62367.

4. Building System Description: Foundation, building type, wall systems, skid details.

E. RSN 22 11 35-3, 60 Percent Design:

1. Foundation analysis and design. For example, excavation, engineered backfill, remediation of collapsible soils and expansive soils or bedrock.

2. Building:

a. Drawings:

1) Building code analysis including occupancy summary, construction type, allowable areas and heights, fire resistance ratings, egress, hazardous materials summary, and other pertinent items.

2) General layout, floor plans, roof plans. Building sections, elevations, details, and dimensions.

3) Door schedule indicating size and type.

4) Door hardware, including manufacturer, model, and security component information.

5) Accessible areas on floor plan.

6) Structural design data drawing consistent with IBC.

7) Location of building structural elements. Including beams, other building supports, dimensions and building penetrations.

b. Preliminary selection of major building systems and construction materials.

c. Samples of primary construction materials and colors.

d. Method(s) for removal and maintenance of mechanical and electrical components.

e. Noise transmission levels.

f. Manufacturer's cut sheets for components.

3. Piping: Refined 30 percent drawings.

4. P&ID: Diagrammatic representation of piping, instrumentation, and valves.

a. Include legend.

b. In accordance with ANSI/ISA 5.1.

c. Use symbology and tagging methodology shown on P&ID drawings. Use area designation 950 and sub-area designation 200.

5. Pumps:

a. Pumping unit calculations for force and load transfer to foundation.

b. Dynamic Analysis and Certified statement.

c. Motor RCF Calculations.

d. Drawings and Data

1) Commercial product data including manufacturer's name, type, model, size, specification, and dimensions. Include technical data and procedures demonstrating conformance with these specifications.

2) Pumping unit dimensional drawings for specific job assembly.

3) Sectional assembly drawings with parts and materials of construction, dimensions, total pump weight, total bowl assembly weight, and major component weights, and means of assembly.

4) Soleplate drawing, including installation, anchorage, and leveling details.

5) Nameplate drawing.

e. Pumping Unit Performance Test Procedure, including:

1) Shop test set up drawing with dimensions.

2) Calculations for each pump at the specified design and guarantee points at full motor speed showing how pump performance will be calculated from pump test data.

3) Process instrumentation location, elevation, and configuration.

4) Capacity and expected head of the test points specified in these specifications.

5) Rated speed of pump at design and guarantee points.

f. Pumping Unit Installation Procedures, including:

1) Pumping unit field alignment procedures.

2) Drawing with lifting lug location, capacity, and suggested rigging.

3) Pump anchorage and soleplate installation requirements.

g. Pump Pre-Installation and Storage Maintenance Instructions, including:

1) Equipment protective covering and storage requirements during storage period following delivery prior to installation.

2) Equipment rotation and maintenance requirements to prevent shaft bending, component warping, and equipment damage during storage period.

6. Motor:

a. Catalog data, including manufacturer's name, type, model, size, and dimensions for:

1) Induction motors.

2) Electrical terminal boxes.

3) RTDs.

4) Provided accessories.

b. Drawings and Data:

1) Assembly and sectional drawings with parts and list of materials, component weights, total weight, and location of center of gravity.

2) Motor outline drawings including thrust bearings and dimensioned location of terminal boxes.

3) Schematic and Wiring Diagrams:

a) Schematic Diagrams:

i. Armature winding connection.

ii. Indicating and protective devices.

iii. Space heaters.

b) Wiring Diagrams: Low-voltage terminal box.

4) Standard drawing 40-D-6032 completed for each size motor.

c. Nameplate data.

d. Motor locked rotor current rating.

7. Motor Starters

a. Approval Drawings and Data:

1) Equipment layout drawings, nameplate drawing, schematic wiring diagram drawings, and manufacturer's catalog data.

2) Wiring and Schematic Diagrams

8. Valves and Equipment:

a. Provide commercial product data for relevant products listed in paragraph 1.06 Pump Station Requirements.

b. Applicable valve standards.

c. Valve pressure classes.

d. Valve data:

1) Actuation Type.

2) Head loss chart.

3) Control Valves:

a) Pilot or motor control system.

b) Characteristic curve (Cv versus percent open), and system velocity.

c) Schematics showing pilot-operated connections and manufacturer recommended componentry if used.

d) Cavitation chart showing flow rate, differential pressure.

e. Motor and controller data:

1) Communication Protocols.

2) Horsepower rating (horsepower).

3) Voltage rating (volts).

4) Locked rotor amps (amperes).

5) Full load amps (amperes).

6) Time rating (minutes).

7) Assembly drawings.

8) Show motor and switch terminals for the motor operated butterfly valves.

9) Clearly mark interface for remote devices.

10) Show designations on device terminals and wire numbers.

11) Show spare contacts.

9. Building Systems:

a. HVAC:

1) Calculations for equipment sizing.

2) Manufacturers' product data for equipment.

3) Drawings including plan, schedules, and sequence of operations.

b. Drainage:

1) Manufacturers' product data for equipment.

2) Drawings including plan, schedules, and sequence of operations.

c. Fire Extinguishers and Alarm:

1) Manufacturers' product data for equipment.

2) Drawings including plan, schedules, and sequence of operations.

d. Electrical:

1) Manufacturers' product data for equipment.

2) Drawings, including plan views with equipment locations including lighting and power receptacles locations, panel schedules, and wiring and connection diagrams.

3) Operation and Maintenance Instruction Manual

F. RSN 22 11 35-4, 90 Percent Design:

1. Certified by Professional Engineer.

2. Field installation procedures for pump station and components.

3. Pump shop testing procedures.

4. Building:

a. Drawings at level of detail needed for construction.

b. Building certification:

1) Letter of design certification for building system.

2) Manufacturer's order number.

3) List design criteria including codes, standards, and loads.

c. Sign and seal by design engineer.

d. Manufacturer's manual for building system, including instructions for field touch-up of finishes.

5. Start-up Plan and Procedures:

a. Mechanical:

1) Instrument calibration.

2) Instrument list and required settings.

b. Electrical:

1) Pre-energization tests.

a) Factory Tests

2) Arc-flash hazard analysis.

3) Electronic programmable relay and instrument settings.

4) Operational testing.

G. RSN 22 11 35-5, 100 Percent Design:

1. Submit changes to items previously approved under the 90 Percent Design submittal.

2. Certified by Professional Engineer.

3. Field testing procedures.

H. RSN 22 11 35-6, Test Report:

1. Pumping Unit Certified Performance Test Data and Reports:

a. Pumping unit performance test data and curves.

b. Hydrostatic test report documented in accordance with HI 14.6.

c. Certified Material Test Reports: Pump casing, impeller, wearing rings, and shaft.

d. Shop test reports. Approved prior to shipment of Pump Station to site.

e. Field test reports.

I. RSN 22 11 35-7, Final Data and Drawings:

1. Combine documentation, previously approved documentation, and as-builts.

2. Combine IO&M manuals for each piece of equipment in the pump station.

a. Pumping Units: Description of equipment function, normal operating characteristics, and limiting conditions.

b. Previously approved RSN's.

c. Installation, operation, and maintenance instructions, including pump and motor troubleshooting guide.

d. Pre-installation and pumping unit storage and maintenance instructions.

e. Mounting details including the pump and motor manufacturer's recommended tightening torques.

f. List of special tools and accessories required for assembly and disassembly of the pumping unit.

g. Spare parts list.

h. Maintenance schedule.

i. Training material.

j. Valves and Equipment:

1) Instructions for installing, operating, lubricating, and maintaining equipment.

2) Complete parts identification lists including identified recommended spare parts.

3) Lists of special tools and accessories.

k. Electrical equipment:

1) IO&M manuals.

2) Include programmable relays and instrument settings.

3) Arc-Flash Analysis, based on installed equipment.

l. Building systems:

1) HVAC.

2) Drainage.

3) Fire extinguishers and Alarm.

m. May be combined with the unified IO&M manual.

n. As-built drawings:

1) All previously supplied drawings.

2) Sectional assembly drawings with parts list and materials of construction.

3) Pumping unit outline drawings with component weights.

4) Pumping unit mounting detail drawings.

3. NSF/ANSI 61 certification for wetted components of pump station.

4. Motor

a. Assembly and sectional drawings with parts and materials lists, and component weights.

b. Mounting instructions and detail drawings.

c. Motor nameplate drawings complete with nameplate data.

d. “As-Built” schematic and wiring diagrams for motor approval drawings.

J. RSN 22 11 35-8, Pumping Unit Field Test Procedures:

1. Functional and operational testing procedures.
2. Test procedure including sequence of testing, pre-operational test equipment checkout form, field test form for recording data collected during pumping unit field test, and list of instruments and gauges used to collect data.
3. List of acceptable measured value ranges for data collected.
4. Schedule for field testing with start times and durations for each activity.

K. RSN 22 11 35-9, Pumping Unit Field Test Reports:

1. Functional and operational testing reports.

L. RSN 22 11 35-10, Operations and Maintenance Training:

1. Training Schedule.
2. Training Material.

1.05 SYSTEM DESCRIPTION

A. General Description:

1. The Cutter Lateral Water Treatment Plant (CLWTP) supplies drinking water to Regulating Tank 3, which gravity-flows down to the Dzilth-Na-O-Dith-Hle (DZ) regulating tank.
   a. A temporary booster pump was installed to increase the water level in DZ regulating tank, increasing the pressure.
   b. Reach 21 prefabricated booster pump station will serve the same purpose as a permanent installation. Two (2) vertical in-line pumps, one (1) of which as a spare, shall act as a throttling valve to deliver consistent flow at a suitable pressure.
2. Within the booster pump station, install a by-pass line to allow for gravity flow around the pumps.
   a. Sized for the full amount of flow through the station, with a 3-inch nominal diameter minimum pipe size.
   b. Connect from the suction manifold to the discharge manifold of the pumping systems.

B. Operating conditions:

1. Working Fluid:
   a. Potable water with up to 4 mg/l free chlorine.
   b. Temperature range of 33-90 degrees Fahrenheit.
   c. Operating flows: 226 gpm
2. Reach 21 Regulating Tank 3

a. Minimum operational WSEL: 6975.5

b. Maximum operational WSEL: 7013.5

c. Maximum WSEL (overflow): 7013.50

3. Regulating DZ Tank:

a. Base of tank elevation: 6984.00

b. Minimum operational WSEL: 7001.00

c. Maximum operational WSEL: 7013.5

d. Maximum WSEL (overflow): 7014.00

1.06 PREFABRICATED PUMP STATION REQUIREMENTS

A. Reference Drawings for water transmission system details upstream and downstream of the prefabricated pump station.

B. Designed in compliance with local, State, Federal and International codes.

C. Equipment suitable for site conditions. Refer to 01 14 10 – Use of Site.

D. Limit connections to an inlet pipe connection, an outlet pipe connection, and single point power connections from a service entrance disconnect.

E. Pump Requirements:

1. Pumped fluid: NSF-61-compliant potable water.

2. Rotodynamic pump, complete with accessories and special tools, suitable for connection to the motor.

3. Design and construct pump in accordance with HI 14.1 - 14.3, HI 9.6.4, and HI 9.8; except as modified herein.

4. Sole plates or pumping unit base frames supplied by the pump manufacturer. Grout after installation.

5. Design pump for working pressure equivalent to or greater than pump shutoff head.

6. Design pump to operate safely during reverse flow and not exceed the motor overspeed rating at maximum head condition.

7. Provide mechanical seal of type single, split seal requiring no field assembly, other than assembly around the shaft and insertion into the pump.

8. Design bearings for minimum L10 life of 5 years in accordance with ABMA 9 or 11.

9. Casing construction to allow easy pump assembly and dismantle.

a. Stainless steel pump nameplate securely mounted to casing containing the following information at minimum, engraved with minimum 1/2-inch black lettering:

1) Pump manufacturer name.

2) Pump model and serial numbers.

3) Rated head (ft).

4) Rated flow (cfs).

5) Rotational speed (rpm).

6) Unit number.

a) If unit number cannot be included on the nameplate, a permanently attached stainless steel tag is required to display the unit number.

i. Unit numbers to match those shown on drawings.

ii. Tag to be attached with corrosion-resistant braided cable or wire.

10. Impellers to be stainless steel and dynamically balanced to ISO 21940-11, Garde G6.3 or better.

11. Shaft to be stainless steel.

12. Coupling type to be flexible.

13. Bowl wearing ring to be aluminum bronze.

F. Provide performance curves showing capacity versus head, efficiency, horsepower, total dynamic head, and NPSHr with reference to capacity and operating speed. Indicate design and guarantee points, POR, and AOR on pump curves. Show capacity in gallons-per-minute and total dynamic head in feet.

G. Pump performance requirements listed in Table 22 11 35A – Pump Performance Requirements.

Table 22 11 35A – Pump Performance Requirements

Pump Characteristics	Units 1 & 2
Individual Capacity at Design TDH (gal/min)	226
Design TDH (ft)	46
Minimum Efficiency at Design TDH (percent)	60
Maximum Allowable Shutoff Head (ft)	90

H. Select pump with a head-capacity curve that has a continuously decreasing head with increasing capacity from shutoff head to minimum expected operating head without dips and valleys.

I. Select pumps to operate in POR as defined by HI 9.6.3 over range of total heads.

J. NPSH margin in accordance with HI 9.6.1 requirements for water/wastewater pumps NPSH margin ratio.

K. Shutoff head pressure not to exceed 40 psi for pumping units as determined by shop performance testing of each pumping unit.

L. Perform motor RCF calculations.

M. Certified statement that lateral, torsional, and structural dynamic analyses have been completed in accordance with HI 9.6.8.

N. Select materials suitable for water condition for an extended product life and reduced maintenance. Motor Requirements:

1. Suitable for operation at site elevation with expected ambient air.
2. Duty: Continuous duty at ambient temperature of 104-degrees F.
3. Capacity and torque characteristics: Sufficient to start, accelerate, and operate connected loads as designated speeds, installed altitude and environment, in indicated operating sequence, and without exceeding nameplate ratings or considering service factor.
4. Type: NEMA MG 1, Design B, premium efficiency motor, with windings to accomplish starting method and voltage as indicated in the drawings:
5. Voltage: 480V, 3-phase, 60Hz.
6. Service factor: 1.15.
7. Insulation System: NEMA Class F.
8. Service Conditions:
9. Maximum ambient temperature: 104 degrees F.
10. Designed for indoor service.
11. Enclosure type: Totally Enclosed, Fan Cooled.
12. Horsepower Rating:
    a. Sized to carry continuously maximum possible pump load developed under specified conditions without benefit of service factor.
    b. Horsepower rating to be value listed in NEMA MG 1.
    c. Maximum horsepower rating permitted: 5 HP.

d. Horsepower rating shall be sufficient to continuously carry the maximum possible pump load developed under specified conditions without benefit of the service factor.

13. NEMA Premium Efficiency Induction Motor.

14. Maximum allowable motor overspeed and reduced speed per motor manufacturer.

O. Concrete Foundation:

1. Refer to Section 53 10 00 – Geological Investigations.

2. Perform additional investigations needed to complete design. Refer to special site requirements of Section 01 31 19 - Project Management and Coordination for requirements prior to field work.

3. Foundation: Design in accordance with IBC, ASCE 7 and ACI 318.

a. Allowable vertical movement of foundation:

1) Maximum settlement: 1 inch.

2) Maximum heave: 0.5 inch.

3) Maximum differential vertical movement, settlement, or heave: 0.5 inch.

b. Design foundation to reduce vapor transmission through concrete foundation elements.

P. Building:

1. Pre-engineered and pre-assembled to the greatest extent possible prior to shipping to site.

2. Building dimensions: Contractor to define footprint. Maximum wall height is 9-feet.

3. Design and construct building and components in accordance with applicable portions of the IBC, IFC, IECC, NFPA 101, ABA, and ASCE7.

4. Precast concrete, insulated wall and roof systems, exterior trim, doors and hardware, and gutters and downspouts.

5. Minimize visual impact to surrounding community. Set building roof line as low as possible, without compromising overhead clearances for equipment and maintenance operations.

6. Earth tone colors to be selected/approved by COR from manufacturer's standard list.

7. Doors:

a. Located for personnel access to building and to allow for equipment and component operation, maintenance, and replacement.

b. Sized to allow operation, maintenance, and removal of pump and control equipment.

c. Card Readers

1) Lock cylinders and keying

a) Furnish locks with seven-pin, interchangeable-core, lock cylinders:

i. Furnish lock cylinders with temporary construction core system which can be voided after contract completion.

ii. Key locks alike.

iii. Furnish permanent core system after contract completion. Provide two keys per lock.

iv. Stamp construction keys with "U.S. Property - Do Not Duplicate" and appropriate key numbers.

v. Furnish six construction keys to COR for Government's use during construction.

vi. Deliver construction keys to COR at jobsite after completion of work when directed by COR.

8. Louvers:

a. Located as required for ventilation and mechanical equipment.

b. Color and finish to match exterior.

9. Operational noise levels: No greater than 60 decibels with doors closed.

a. Measured with noise producing equipment operating simultaneously.

b. Measured 3 feet from the building in accordance with ASTM E1780.

10. Floor: Slip resistant.

11. HVAC:

a. Design HVAC systems based on computer-generated heating and cooling analysis with one of the following software programs:

1) Trane TRACE 700.

2) Trane TRACE 3D

3) Carrier HAP.

4) Energy Plus.

b. Protect equipment from environmental conditions, manage heat loads from equipment and meet occupancy requirements.

c. Design and select HVAC equipment based on:

1) Weather data conditions found in the ASHRAE Fundamentals Handbook for the geographically closest weather station:

a) Use 99.6 percent heating dry bulb and the 0.4 percent cooling dry bulb for the basis of the analysis.

b) Use 0.4 percent evaporation wet bulb for the basis of any evaporative cooling design.

d. Indoor building temperatures:

1) Minimum winter temperature: 40 deg F or higher if required for equipment protection.

2) Maximum summer temperature: 102 deg F or lower if required for equipment protection.

e. Ventilation rates per ASHRAE 62.1.

f. Meet the criteria of the IBC, IMC, ASHRAE, IFC and NFPA.

12. Equipment Requirements:

a. Energy Star rated. If Energy Star products not available, equipment to be per ASHRAE 90.1.

b. Refrigerants per ASHRAE 15 and the IMC.

c. Duct per SMACNA 1996.

d. Heating shall be electric. Fossil fuels not available at the site.

e. Evaporative cooling is not permitted.

Q. Drainage:

1. Provide drainage system for mechanical seal leakage.

2. Provide floor drains near each pump and air relief valve to collect nuisance water.

3. Piping to per IPC.

4. Daylight drainage to a suitable location. Coordinate location with COR.

R. Fire Alarm, Detection, and Extinguishers: As required by IBC, IFC, and NFPA 10.

S. Piping:

1. Connect Pump Station piping to yard piping shown on Drawings 1695-D-62366 and 1695-D-62367.

a. Connect pipe to flanges above pump station foundation.

b. Above grade or exposed piping outside building is not permitted.

c. Provide couplings or joints to accommodate up to 1.5 inches of vertical movement of the inlet and outlet pipe flanges.

2. Design pressure to be maximum operating pressure or transient pressure (100 psi), whichever is greater. If needed, provide equipment for surge protection in the system.
3. Locate piping to provide easy access for service, repair, removal, and replacement of piping and appurtenances.
4. Provide dismantling joints, such as couplings or unions, to permit easy removal of pumps, valves, meters, etc.
5. Restrain piping and appurtenances.
6. Use metallic fittings for valves.
7. Dielectrically isolate piping, valves or other materials or equipment constructed from dissimilar metals.
8. Provide thrust restraints as required for unbalanced thrust forces.
9. Provide supports which will prevent undue strain on any pipe or piece of equipment.
10. Gaskets: NSF/ANSI 61 certified.

T. Valves and Equipment:

1. Locate to provide easy access for service, repair, removal, and replacement.
2. Provide supports which will prevent undue strain on any pipe or piece of equipment.
3. Suction manifold
   a. Combination air valve
      1) Locate at high point of piping.
      2) Provide piping that releases water to drains.
      3) Provide an isolation valve between manifold pipe and air valve.
   b. Isolation valve: Locate isolation valve near inlet connection.
   c. Pressure switch with gauge
4. Individual pump suction lines
   a. Manual isolation valve: Isolate pump individually for maintenance or removal while maintaining operability of other pump(s).
5. Individual pump discharge lines
   a. Control valve
      1) Pump is to start and stop against a closed control valve.
      2) Coordinate the starting and stopping of the pumps with the opening and closing of the control valves.

b. Pressure switch with gauge located between pump discharge and discharge valve.

c. Check Valve

d. Manual isolation valve

6. Discharge manifold

a. Combination air valve

1) Locate at high point of piping.

2) Provide piping that release water to drains.

3) Provide an isolation valve between manifold pipe and air valve.

b. Pressure transmitter.

c. Magnetic flowmeter.

1) Locate in accordance with manufacturer's installation requirements.

2) In a location in the piping system that allows it to measure the total discharge from all the pumps at the pump station.

d. Isolation valve

1) Provide isolation valves on either side of flowmeter.

2) Locate isolation valve near outlet connection.

7. Gravity bypass line:

a. Check valve

b. Provide isolation valves on either side of check valve.

8. Refer to applicable AWWA valve standard.

9. Control valve:

a. Pilot or motor operated

b. Drip tight shut-off.

c. Open and close with pump operation.

d. Suitable valve for throttling operation.

e. Flanged ends.

10. Isolation valves:

a. Provide handwheel for manual operation.

b. Flanged ends.

c. Drip-tight shutoff.

11. Check valves:

a. Valve position indicator compatible with Modbus RTU.

b. Flanged ends

12. Air valves:

a. Air valve to allow sufficient air inlet and air outlet for operating conditions, including air accumulation under pressure.

b. Single or dual body.

c. Stainless steel internal parts such as guides, bushings, and screws.

d. Stainless steel floats.

e. Float-pivot supports: Brass, bronze, stainless steel, or cast iron.

13. Pressure switches:

a. Accuracy: ±1 percent of full range.

b. Electrical output: DPDT switch.

c. Switch elements shall be general purpose, 1A, 120 VAC 125 VDC.

1) NEMA 4 enclosure.

d. Field adjustable to full range of positive and negative pressures encountered during pump start up and operation.

1) Suction manifold pressure switch:

2) Actuate when pressure decreases and reaches set point.

3) Automatically resets when pressure exceeds set point.

4) Field verify set point to actuate switch at pressure that maintains required NPSH margin and margin ratio.

e. Pump unit discharge pressure switches:

1) Actuate when the pressure increases and reaches the set point.

2) Automatically resets when the pressure drops from the set point.

3) Set point shall be field set to actuate switch at the set point.

4) Set point shall not be within the top 10 percent of full range.

14. Pressure Transmitters:

a. Provide plugged tapped hole at or near pressure transmitter to enable adding pressure gauge.

b. Pressure range determined by the pump station designer.

c. Field adjustable.

d. Output, provide at least one of:

1) 4-20 milliamperes DC that supports HART communication protocol.

2) Communication port, RS-485 or RJ45 that supports Modbus RTU or Modbus TCP/IP communication protocol.

e. Transmitter shall be loop powered or supplied from 120 VAC source.

f. Adjustable offset (zero) and span.

g. Accuracy: Plus, or minus 0.25 percent.

h. In-line manifold (block and bleed) with vent/drain valve.

15. Flowmeter:

a. Magnetic flowmeter based on Faraday's law.

1) Accuracy: Plus or minus 0.5 percent of flowrates, above 1 fps, over the range of measurement.

b. Installed following manufactures recommendation on upstream and downstream clearances.

U. Motor actuators:

1. In accordance with AWWA C542 and applicable valve standard.

2. Include digital control module.

3. Control House: At a minimum NEMA 3R or NEMA 4X enclosure.

4. Operator Interface:

a. Local Interface:

1) Located at the motor actuator. Include:

a) Local/Remote control switch.

b) Open and Close pushbuttons or control switch.

c) Full Close and Full Open indicating lights.

d) Valve Position Display.

b. Remote:

1) Interface and controlled from the control system, Section 26 24 20 – Control Boards.

2) Include:

a) Valve full open and full close indication.

b) Valve position.

c) Valve open and close control.

V. Electrical:

1. In accordance with applicable IEEE, NEMA, and UL Standards, and the latest revision of the National Electrical Code (NEC).

2. Provide power distribution and transformers as required to supply prefabricated pump station loads.
3. Contractor shall provide power for operating, testing, and constructing pump station and associated facilities.
4. Incoming Electrical Service:
    a. Voltage: 480V.
    b. 3 phase, 60 Hertz.
    c. Provided by local utility:
5. Provide electrical power with the appropriate characteristics:
    a. Capacity: Calculated in accordance with NFPA 70.
    b. General System Voltage: Determine based on overall facility power demands.
    c. External service entrance equipment with transfer switch and connections for portable engine generator.
    d. Separate outdoor enclosures sized appropriately for connection of site power and instrumentation circuits.
        1) Coordinate size and location with electrical contractor to simplify conduit routing from other facility equipment.
        2) External power loads: As determined by manufacture.
        3) External instrumentation signals to include as determined by manufacturer.
    e. Main Switchboards/Panelboards:
        1) In accordance with NEC plus 10 percent spare capacity.
        2) Conform to NEMA PB-1, NEMA 250, UL 50, UL 67, and NFPA 70.
    f. Interior Distribution Transformers: As required to serve building circuits and equipment plus 10 percent spare capacity.
    g. Branch Circuit Panelboards: In accordance with NEC plus 25 percent spare capacity.
    h. General Receptacle System Voltage:
        1) Provide 120 volt/1-phase/60 Hz receptacles.
        2) Provide 480 volts/3-phase/60 Hz receptacles.
            a) Provide one 480V, 60A receptacle within the building on a wall opposite the main entrance.
    i. Utility Revenue Meters: Provided by local utility.
6. Grounding:

a. Ground components inside the pump station in accordance with the requirements of Section 26 05 20 – Grounding and Bonding.

b. Connect pump station components to a common ground bus and ground to ground pads located on either side of the exterior of the pump station. Connect ground pads to the rest of the onsite grounding system using grounding electrode conductors.

7. Instrument Transformers: Conform to IEEE C57.13.

W. 480 Volt Panelboard:

1. Main Circuit Breaker (MCB), 480 volt, 3 phase, 3 wire, 60 Hertz.
2. Metering: Multifunction Power and Energy Meter with Modbus RTU communication protocol.
3. Include 5 spare 3 phase circuit breakers to provide for future expansion.
4. Surge Protection Device.
5. Determine Load by supplier based on equipment provided and NEC requirements.
6. Loads:

a. Pump Station Building Load: Determined by supplier based on equipment provided and NEC requirements.

b. Site loads supplied from Pump Station Panelboard.

c. Design Load: TBD kVA.

X. Motor Controllers:

1. Ratings: As required for selected motors.
2. Enclosure: Dust tight.
3. Main Pumping Unit Motor Starters without VFDs:

a. Maintain line side power factor no less than 0.95.

b. Motor starter control via Modbus RTU.

c. Local/Remote selection with Start/Stop pushbutton.

Y. Lighting:

1. Provide interior lighting and power receptacles for the pump station.
2. Provide exterior lighting above pump station doors and at least two duplex exterior power receptacles located on the outside of the pump station.

Z. Cable and Raceway:

1. As necessary to connect components provided with the building. Includes wiring HVAC, fire, lighting, and receptacle components supplied with the building for fully functional systems.

2. Supply power to equipment provided with the building from pre-installed panelboards according to specifications.
3. Provide in accordance with Section 26 05 10 – Conductors and Cables and 26 05 33 – Raceways and Boxes.

AA. Grounding:

1. Protect from lightning strikes.
2. Protect from shock due to overhead power transmission lines accidentally contacting metal fences.
3. Comply with requirements of NFPA.
4. Comply with applicable recommendations of IEEE 142 and IEEE 1100.

BB. Accessories:

1. Anchors and Miscellaneous Metalwork: Refer to Section 05 50 00 – Metal Fabrications.
2. Concrete: ACI 318.
3. Non-shrink Grout: See Section 02 63 20 – Non-shrink Grout.

CC. Building:

1. Structural: Prefabricated with skids and/or embeds as required for transport and placement on site.
2. Doors:
   a. Steel doors compliant with ABA.
   b. Fire rated doors, hardware, and accessories: UL fire rated.
   c. Door Hardware:
      1) Materials and Finish: Stainless steel.
      2) Lock: See Section 28 10 01 – Security and Surveillance.
      3) Exit Devices: Listed by UL for accident hazard installations.

DD. Control System:

1. Provide sufficient space to mount equipment supplied for Section 26 24 20 – Control Boards.
2. Mount equipment supplied as part of Section 26 24 20 – Control Boards prior to shipping the Prefabricated Pump Station to site.

1.07 COATINGS AND SURFACE FINISHES

A. Coatings and surface preparation in accordance with 09 96 20 – Coatings.

B. Passivate stainless steel surfaces in accordance with 09 96 20 – Coatings.

1.08 SECURITY, CONTROL SYSTEM AND COMMUNICATIONS

A. Coordinate with Sections 28 10 01 – Security and Surveillance System, and 26 24 20 – Control Boards.

B. Provide raceway and cable connections between the security, control system and communication system components and other equipment and components.

C. Connections necessary for a complete and functional, system meeting specification requirements.

D. Install control cabinets in pump station.

E. Provide sufficient space to mount equipment supplied for Section 28 10 01 – Security and Surveillance System.

1.09 QUALIFICATIONS

A. Prefabricated Pump Station Designer(s):

1. Professional Engineer registered in one of the 50 States of the United States or the District of Columbia.
2. Designed an operational pump station in the past 15 years of at least similar size and scope.

B. Prefabricated Pump Station Manufacturer: Manufactured five or more pump stations in the past 20 years of at least similar size and scope.

C. Pump Manufacturer Qualifications:

1. Provide documentation of similar pumping units designed and manufactured with five (5) years of successful operation.

D. Pump and Motor Manufacturer Erection Engineer Qualifications:

1. Pump and motor erection engineer can be one and the same.
2. Minimum five (5) years of experience in the erection of pumping equipment, specifically pumps and motors, of similar size and type.
3. Provide a project list of recent related projects that the erection engineer was directly involved in.

E. Welding Procedures, Welders, and Welding Operators:

1. Conform to either: ASME BPVC-IX or AWS D1.1

F. Millwright Qualifications:

1. Millwright qualifications to include a minimum five (5) years of experience installing rotating pumping equipment of similar scope and size.

1.10 DELIVERY, STORAGE, AND HANDLING

A. Refer to Section 01 60 00 – Product Requirements.

B. Prevent damage during loading, transportation, unloading, and storage.

C. Protect from corrosion, deformation, and other types of damage.

D. Remove and replace damaged items with new items.

E. Handle, transport, and store products in accordance with equipment manufacturer's recommendations.

1.11 SITE CONDITIONS

A. Ambient temperatures range: 45 to 92 degrees Fahrenheit.

B. Wetted pumping unit components anticipated temperature range of 50- to 60-degrees Fahrenheit.

C. Select lubricants for environmental conditions and ambient conditions. On site adjustment, modifications, or chemical additions to lubricants are not permitted.

PART 2 PRODUCTS

2.01 PUMPING UNITS

A.

2.02 PIPING

A. Refer to AWWA M11.

B. Material: ASTM A53, Type E or S, Grade B or ASTM A139, Grade C, D, or E.

2.03 CONTRACTOR SOURCE QUALITY TESTING

A. Piping Shop Hydrostatic Pressure Testing:

1. Straight sections of metal piping manufactured and hydrostatically tested in accordance with ASTM A53 or ASTM A139 need not be retested.
2. Hydrostatically test pipe in accordance with AWWA C200.
3. Notify Government a minimum of 30-days before test.
4. Government may witness hydrostatic test and calibration of pressure gauges.

B. Valves and Equipment

1. Tests will be Government witnessed. Notify COR 30 days prior to valve testing.
2. Minimize number of Government trips by testing all valves from same manufacturer during same Government trip.
3. Shop test valves in accordance with applicable AWWA standard and manufacturer's recommended testing requirements.
4. Shop leakage test:
   a. Resilient seated valves:
      1) Leak test valves in both directions
      2) Spray or high velocity leakage is not acceptable.
      3) If valve is not drip tight, valve is unacceptable.
      4) If valve leaks, adjustments shall be made until valve is drip tight with no leakage.
      5) After any adjustments are made, inspect valve position indicator and correct if necessary.
   b. Metal seated valves:
      1) Leak test valves in both directions.
      2) Allowable leakage: Per applicable standard.
5. Supply documentation certifying test procedure and pressures used.

C. Electrical

1. Government may:
   a. Inspect equipment and witness factory tests.
   b. Perform additional functional tests with assistance from factory personnel.
2. Notify COR at least 21 days in advance of factory testing.

A. Completely assemble mating parts of pumping unit in shop to ensure correct fitting of all parts. Match-mark pump components before disassembly for shipment, unless shipped completely assembled, to ensure correct field assembly.

B. Hydrostatic Pressure Testing:

1. Government may witness hydrostatic test of pumping unit.
2. Hydrostatically test pump casing in accordance with HI 14.6 minimum test pressure of parts 1.5 times casing shutoff pressure.

C. Pumping Unit Performance Testing:

1. Government may witness performance test of pumping unit.

2. Test in accordance with HI 14.6.Minimum pump efficiency shown in Table 22 11 35A – Pump Performance Requirements.

1. In addition to the five (5) test points included in HI 14.6, take reading at pump shutoff head.

2. Changes in impeller diameter or other rework to pumping units requires retesting of pumping unit performance.

3. Prepare and submit test report in accordance with HI 14.6.WITNESS INSPECTION POINT (HOLD POINT)

D. Provide 30-day notice before the start of the witness point milestone for Government technical engineers or Government representative to verify:

3. Hydrostatic pressure testing.

4. Pump performance testing.

5. Motor performance testing.

E. Inspections to be conducted at a location that is approved for travel by the Department of State (www.travel.state.gov), without additional protective services or safety requirements.

1. Provide necessary equipment and tools to perform an adequate inspection of the runner and associated equipment.

2. If the inspection location does not meet these requirements, relocate the components/equipment within the United States, for inspection.

3. This relocation will be at the expense of the Contractor.

PART 3 EXECUTION

3.01 MANUFACTURER'S ERECTION ENGINEER

A. No work to be performed on pumps or motors without applicable Manufacturer's Erection Engineer being on-site to direct/oversee the work.

B. Manufacturer's qualified erection engineer to provide technical assistance to the Contractor during installation of the equipment. Applicable Manufacturer's Erection Engineer is required to be on-site, at minimum, for the following operations:

1. Setting of pumping unit to baseplate.

2. Installation of all baseplates, anchorage and grouting.

3. Installation of pumps.

4. Installation of motors.

5. Coupling and alignment of the pumping units.

6. Functional and operational testing.

7. Commissioning.
8. Operations and Maintenance training.

C. Provide to the following schedule:
1. One trip for installation and alignment check, and,
2. One trip for field testing, commissioning, and operations and maintenance training.

3.02 PUMPING UNIT INSTALLATION

A. Pump and motor installation performed by qualified millwright(s) under the supervision of the erection engineer.

B. Install pumping unit in accordance with pump and motor manufacture's recommendations and approved RSN's except as modified herein.

C. Before connecting pump to discharge piping, ensure construction waste and accumulated debris have been removed.

D. Connection of pump to discharge piping will be witnessed by Government and pump manufacturer's representative.

E. After piping has been connected, verify alignment of motor shaft with pump shaft is within manufacturer's allowable tolerance.

F. Servicing of pumping unit to include complete lubrication, adjusting, and cleaning of the unit.
1. Pumping units to be serviced by the manufacturer under the supervision of the erection engineer.

3.03 PUMPING UNIT FUNCTIONAL TESTING

A. Provide 30-day notice to Government prior to testing.

B. Lubricate, adjust, and clean pumping unit after installing in accordance with pump manufacture's recommendation.

C. Calibrate permanent gauges, instruments, recording, and sensing devices and adjust equipment to ensure proper pumping system operation. Instruments to be factory set and calibrated to greatest extent possible. Record all set points and ranges in field test report.

D. Before initially energizing pump motor, successfully test motor control, monitoring, and protective circuits. Successfully test motor control, monitoring, and protective circuits in accordance with Section 26 05 90 – Wiring Checkout and Tests.

E. After servicing, perform 4-hour field motor test with the motor uncoupled from the pump:

1. Record motor bearing temperatures, voltage, and amperage every 15-minutes.
2. Test conducted by Contractor under the guidance of the erection engineer and witnessed by Government.

F. After servicing and field motor test, perform a bump test on each pumping unit under load:

1. Take readings with gauges and meters with current calibration records as recommended by HI 14.6.
2. Individual tests to be performed for each pump. Do not test more than one pump at any time.
3. During the test, for each observation point, observe and record pumping unit operation including impeller direction of travel, flow rate from strap-on flowmeter, discharge pressure, noise level in accordance with HI 9.2, and vibration:
   a. Point 1: Pump startup.
   b. Point 2: Operate each pump for a minimum of 20-minutes at rated head operating point.
   c. Point 3: Pump shutdown.

3.04 PUMPING UNIT OPERATIONAL TESTING

A. Provide 30-day notice to Government prior to pump testing.

B. After servicing and field motor test, perform an operating test on each pumping unit under load:

1. Measurement gauges and meters to have current calibration records in compliance with HI 14.6.
2. Test conducted by Contractor and witnessed by Government for each pump. Individual tests to be performed for each pump. Do not test more than one pump at any time.
3. During the test, observe and record pumping unit operation, water temperature, flow rate from strap-on flowmeter, discharge pressure, motor speed, noise level in accordance with HI 9.2, vibration analysis, and motor bearing temperatures, voltage, and amperage:
   a. Operate each pump at Design TDH for 3 continuous hours. Take readings for 3-hours:
      1) Once every 15-minutes.
   b. Record readings in tabular form.

a. Vibration levels not to exceed acceptable field vibration limits established by HI 9.6.4.

1) If, after installation, pumping unit does not meet these requirements, modify pump and motor to meet these requirements. Use of frequency adjusting devices (such as washers and dampers) between discharge head assembly and motor is not permitted.

4. Inspect discharge head base and discharge pipe connection for leakage. If leaks are present, repair and retest.

5. Inspect mechanical seal/s for leakage and record leakage rate if leakage is present. If leakage from mechanical seal is greater than 2 drops per hour, repair and retest.

6. Check all bolt torque values at conclusion of the tests using calibrated tools.

3.05 PUMPING UNIT COMMISSIONING SUPPORT

A. Pump and motor erection engineer and commissioning agent to be on-site during pumping unit startup and operation during commissioning.

B. Refer to Section 01 80 15 – Commissioning.

3.06 PIPING

A. Install and test in accordance with AWWA M11.

3.07 VALVES AND EQUIPMENT

A. Refer to applicable valve standard.

B. Do not damage to valve body, valve seats, or motor operator during testing.

3.08 PUMP STATION

A. Install in accordance with approved RSN's.

B. Inspect and test in accordance with IBC, unless otherwise specified.

3.09 FOUNDATION

A. Furnish, form, and place concrete in accordance with ACI 301.

3.10 CONTRACTOR FIELD QUALITY CONTROL

A. Government will witness tests. Notify Government 30 days prior to Testing.

B. See 01 80 15 Commissioning and Testing.

C. Furnish lubricating devices and grease in accordance with the equipment manufacturers' recommendations.

D. Before performing operational field tests, lubricate, adjust, and clean equipment.

E. Check lubricating devices and water piping systems for correct operation.

F. Equipment:

1. Verify equipment installed and connections made. Include connections to external systems, like electrical raceway, power, piping and control interfaces.
2. Inspect equipment and connections.
3. Perform field wiring checkout and test in accordance with Section 26 05 90 - Wiring Checkout and Tests.
4. Perform acceptance tests referenced in ANSI/NETA ATS for motors and electrical equipment.

G. Calibrate and set permanent instruments, gauges, recording and sensing devices.

1. Adjust equipment in accordance with the manufacturers' instructions.
2. Provide final settings and adjustment in final data manual.

H. Provide craftsman to make necessary changes, either temporary or permanent.

I. Before making electrical connections and energizing distribution equipment:

1. Cable Systems: Test motor control, monitoring, and protective wiring in accordance with Section 26 05 10 - Conductors and Cables, Section 26 05 13 - Medium-Voltage Power Cable Systems, and Section 26 05 90 - Wiring Checkout and Tests.
2. Switchboards/Panelboards:
   a. Continuity tests using a DC device with buzzer.
   b. Insulation test using a 500-volt minimum insulation-resistance test set.
      1) Record readings after 1 minute and until the reading are constant for 15 seconds.
      2) Resistance between phase conductors and between phase conductors and ground shall be not less than 25 megohms.
   c. Record test data. Include identification of panelboard and megohms readings verses time.

J. Motor Control Equipment Tests:

1. Bus megger test.
2. Ground test.
3. Verification mechanical interlocks are functioning properly.
4. Record settings of motor protection relay and other protective devices.

3.11 COATING REPAIR

A. See Section 09 96 20 Coatings.

3.12 TRAINING

A. See Section 01 79 20 Training.

B. Pump station operations and maintenance training to include, but is not limited to, the following:

1. Minimum of four hours.
2. Number of attendees: Up to 10.
3. Provide printed training material for each attendee.

C. Training performed by Contractor engineering representative.

D. Training to include in-class and hands-on portions. Training must include system walk though at the pump station.

E. Training Content:

2. Electrical system overview.
3. Hydraulic system overview.
4. Control system overview.
5. Operation and maintenance of electrical/mechanical equipment.
6. Pump station operation.

3.13 COMMISSIONING

A. See Section 01 80 15 Commissioning.

END OF SECTION

SECTION 26 05 02
BASIC ELECTRICAL MATERIALS AND METHODS

PART 1 GENERAL

1.01 MEASUREMENT AND PAYMENT

A. Complete Electrical System:

1. Payment: Lump sum price offered in the schedule includes cost of:
   a. Performing required design.
   b. Furnishing recently certified calibrated testing equipment.
   c. Performing testing.
   d. Transporting and storing equipment and materials.
   e. Modifying and relocating equipment.
   f. Placing, leveling, and grouting channel bases.
   g. Assembling, adjusting, and installing equipment.
   h. Painting equipment and materials.
   i. Brackets, fasteners, bolts, nuts, lock washers, and other accessories required for mounting or installing electrical equipment and materials.
   j. Drilling holes in steel structures (other than tubular structures) as required for mounting or installing electrical equipment and materials.
   k. Furnishing, handling, and storing spare parts for electrical equipment.
   l. Furnishing special tools and appliances for maintenance and adjustment of equipment.
   m. Making electrical connections; furnishing all miscellaneous materials, which are required for making the connections to electrical equipment. Contractor estimates the number of connections to be made to the equipment based on prior knowledge or experience with similar equipment. No additional compensation will be allowed Contractor if actual connections exceed number estimated by Contractor at time of bidding.
   n. Performing wiring checkout and tests.

1.02 REFERENCE STANDARDS

A. ASTM International (ASTM)

1. ASTM A123/A123M-17 — Zinc (Hot-Dip Galvanized) Coatings on Iron and Steel Products

2. ASTM A153/A153M-16a Zinc Coatings (Hot-Dip) on Iron and Steel Hardware

B. Institute of Electrical and Electronics Engineers (IEEE)

1. IEEE C2-2023 National Electric Safety Code (NESC)

C. National Electrical Installation Standards (NEIS)

1. NECA 1-2015 Good Workmanship in Electrical Contracting

D. National Fire Protection Association (NFPA)

1. NFPA 70-2023 National Electrical Code (NEC)

1.03 EXTRA MATERIALS

A. Provide to Government special tools and equipment necessary to properly install, adjust, test, and check operation of electrical equipment. Furnish all additional tools and equipment as necessary to properly install, adjust, and check operation of electrical equipment.

PART 2 PRODUCTS

2.01 MATERIALS AND EQUIPMENT

A. Conform to NFPA 70 and IEEE C2.

B. Furnish all electrical materials and equipment.

C. Provide galvanized steel or non-corrosive metal for mounting bolts, nuts, and washers for minor items of electrical equipment and lighter weight items. Do not use cadmium-plated mounting hardware.

D. Change designs as required where Contractor-furnished electrical equipment and materials differ in size, type, ratings, or other physical properties from designs in these specifications. CO will approve changes at Contractor's expense, unless Contractor can demonstrate changes are necessary regardless of manufacturer.

E. Provide special tools and appliances furnished by manufacturer for maintenance and adjustment of manufacturer's electrical equipment.

F. Use test equipment that has been calibrated within 365-days of its use with calibration sticker clearly visible.

G. Deliver all spare parts required by these specifications to Bureau of Reclamation only after completion of contract.

PART 3 EXECUTION

3.01 INSTALLATION

A. Install, assemble, and adjust equipment in accordance with this subparagraph. These specifications requirements are based on the premise that no conflict exists between specified design, standards, and codes. However, in the event a conflict is discovered by Contractor, it will be Contractor's responsibility to inform CO of the conflict:

1. In the event of conflicting requirements, establish precedence in the following order:

   a. These specifications or as directed by CO.

   b. Drawings included in these specifications.

   c. Latest edition of "National Electric Code" of the National Fire Protection Association for electrical wiring apparatus and the adopted electrical code of the State in which construction is located. Cooperate with any agency designated by that State to inspect electrical installation for conformance with applicable State code.

B. Do not install electrical equipment until approval drawings and data for associated equipment have been approved by Government.

C. Electrical Installations, Assembly Operations, and Adjustments: Comply with NFPA 70, IEEE C2, and NECA 1.

D. Make electrical installations complete and ready for service.

E. Install electrical equipment in accordance with directions furnished by manufacturer's instruction books.

F. Make all electrical wire, cable, conduit, and grounding connections and furnish all miscellaneous materials which are required for making these connections to equipment.

G. Install items of electrical equipment required to be in a lineup, so appearance is uniform, including height, depth, color, and general construction.

H. Tighten nuts used in electrical equipment assembly with torque wrenches to torque values recommended by equipment manufacturers.

I. Drill holes in bolted steel structures and provide fastenings required for mounting or installing electrical equipment and materials.

J. Do not drill holes in tubular steel structures. Fasten to tubular steel structures by means of properly drilled and tapped pads or brackets welded to tubular members.

K. Installation of Electrical Equipment includes:

1. Leveling and grouting channel bases.

2. Drilling holes, furnishing hardware, and assembling components to each other.
3. Furnishing materials for and making all connections correctly in accordance with final wiring diagrams.
4. Tagging wires and cables at each end.
5. Correcting any errors made by Contractor in installation at no expense to Government.
6. Wiring and checkout of all equipment in accordance with Section 26 05 90 – Wiring Checkout and Tests.

L. Set electrical equipment installed on concrete foundations on channel bases and grout in place to provide full and even bearing.

3.02 REPAIR

A. Repair or replace damaged devices and repair damaged painted surfaces of equipment to match original finish.

B. Correct by repair or replacement, at Contractor's expense, all damage to or failure of any part of the items of material and equipment which in opinion of COR was caused by faulty installation, faulty mechanical assembly, or mishandling.

3.03 FIELD QUALITY ASSURANCE

A. Government will inspect outdoor switchgear and motor control equipment during construction. Acceptance of equipment will be made after equipment is operational.

END OF SECTION

SECTION 26 05 10
CONDUCTORS AND CABLES

PART 1 GENERAL

1.01 MEASUREMENT AND PAYMENT

A. Cost:

1. Include in price offered in the Price Schedule for Complete Electrical System.

1.02 REFERENCE STANDARDS

A. ASTM International (ASTM)

1.	ASTM B8-11(2017)	Concentric-Lay-Stranded Copper Conductors, Hard, Medium-Hard, or Soft

B. Building Industry Consulting Service International (BICSI)

1.	BICSI-TDMM-14th Edition	Telecommunications Distribution Methods Manual (TDMM)

C. Insulated Cable Engineer Association (ICEA)

1.	ICEA S-90-661-2012	Category 3, 5, and 5e Individually Unshielded Twisted Pair Indoor Cables for Use in General Purpose and LAN Communications Wiring Systems
2.	ICEA S-116-732-2013	Standard for Category 6 and 6A, 100 Ohm, Individually Unshielded Twisted Pairs, Indoor Cables (With or Without an Overall Shield) for Use in LAN Communication Wiring Systems

D. Institute of Electrical and Electronics Engineers (IEEE)

1.	IEEE C2-2023	National Electrical Safety Code (NESC)

E. National Electrical Contractors Association (NECA)

1.	NECA/BICSI 568-2006	Installing Building Telecommunications Cabling

F. National Electrical Manufacturers Association (NEMA)

1.	NEMA WC 57/ICEA S-73-532-2014	Control, Thermocouple Extension, and Instrumentation Cables

2. NEMA WC 70/ICEA S-95-658-2021 Power Cables Rated 2,000V or Less for the Distribution of Electrical Energy

G. National Fire Protection Association (NFPA)

1. NFPA 70-2023 National Electrical Code (NEC)

H. Telecommunications Industry Association (TIA)

1. TIA J-STD-607-2019 Commercial Building Grounding (Earthing) and Bonding Requirements for Telecommunications
2. TIA 568.0-D-2015 Generic Telecommunications Cabling for Customer Premises.
3. TIA 568.1-D-2015 Commercial Building Telecommunications Cabling
4. TIA-568-C.1-2009 Commercial Building Telecommunications Cabling
5. TIA 568-C.2-2011 Balanced Twisted-Pair Telecommunications Cabling and Components
6. TIA 568-C.4-2011 Broadband Coaxial Cabling and Components
7. TIA 1152-2021 Requirements for Field Test Instruments and Measurements for Balanced Twisted-Pair Cabling

I. Underwriters Laboratories, Inc. (UL)

1. UL 444-2021 Communications Cables
2. UL 1581-2001 Standard for Electrical Wires, Cables, and Flexible Cords
3. UL 1666-2007 Standard for Test for Flame Propagation Height of Electrical and Optical-Fiber Cables Installed Vertically in Shafts
4. UL 2024-2014 Standard for Cable Routing Assemblies and Communications Raceways

1.03 DESIGN REQUIREMENTS

A. Verify per NFPA 70 the conductor sizes shown on drawings are appropriate for equipment provided under this contract.

1.04 SUBMITTALS

A. Submit in accordance with Section 01 33 00 – Submittals and Section 01 33 26 – Electrical Drawings and Data.

B. RSN 26 05 10-1, Approval Data:

1. Manufacturer's catalog data.

C. RSN 26 05 10-2, Construction Documentation:

1. Compiled Conductor Installation Log.
2. Test Reports and Wire Termination Sheets:
   a. Provide test reports for each cable provided by Contractor.
   b. Include electronic PDF and paper copy of each trace made during testing.

1.05 DEFINITIONS

A. Cable: Cable, cables, wire, or wires of one or more insulated conductors.

B. Power Cable: For power loads including motors; alternating-current distribution circuits; heating, ventilating, and air-conditioning and lighting circuits; and cable that is used for controlling heating, ventilating, air-conditioning, and lighting equipment.

C. Control Cable: For control, metering, indication, annunciation, and relaying circuits; and circuits not identified as power circuits.

D. Instrumentation Cable: Power limited cable for RTD, transducer output circuits, and can be used for serial communication (RS-232 & RS-485).

E. Telecommunications Cable: For supervisory computer control, data, voice communication, and logic level signals.

F. Enclosure Wiring: For wiring inside of enclosures or control boards.

PART 2 PRODUCTS

2.01 CABLE, GENERAL

A. Manufactured no more than 24-months prior to Notice to Proceed (NTP).

B. Conductors:

1. Copper in accordance with ASTM B8, Class B or C.
2. Stranded conductors, except for solid conductor building premises wire.

C. AWG or kcmil designation.

D. Coverings or insulation: Suitable for installation in vertical position without injury to covering or deformation of insulation when supported in accordance with NFPA 70.

2.02 PHASE IDENTIFICATION

A. Power Cable Phase Conductors and Building Premises Wire:

1. 120/240, single-phase: Black.
2. 120/208 or 240 volt. 3-phase: Black, red, blue. Colored phase tape may be used in lieu of colored insulation.

B. Neutral (Grounded) Conductors: In accordance with NFPA 70.

C. Equipment Grounding Conductors:

1. 6 AWG and smaller: Green insulation.
2. Larger than 6 AWG: Green tape at both ends and visible points including junction boxes.

2.03 COLOR CODING

A. Colored insulation or jacket compound. Do not apply color coatings to insulation or jacket surface.

B. Control Cable:

1. In accordance with NEMA WC 57, Table E-2.

C. Instrumentation Cable

1. Sequentially number each pair/triad for identification.

2.04 SERVICE LIFE

A. Designed and manufactured for a service life of at least 40-years.

2.05 POWER CABLE

A. Type:

1. Single-conductor or multi-conductor, non-shielded type.
2. Labeled type TC when installed in cable tray.

B. Size: 12 AWG, minimum.

C. 600-volt rated insulation unless specified otherwise.

D. Color Coding:

1. Power Cable Phase Conductors and Building Premises Wire:

a. 120/240, single-phase: Black, Red.

b. 120/208- or 240-volt 3-phase: Black, Red, Blue. Colored phase tape may be used in lieu of colored insulation.

2. Neutral (Grounded) Conductors:

a. 6 AWG and smaller: White insulation.

b. Larger than 6 AWG: White insulation or White tape at both ends and visible points including junction boxes.

3. Equipment Grounding Conductors:

a. 6 AWG and smaller: Green insulation or Green with one or more Yellow stripes.

b. Larger than 6 AWG: Green tape at both ends and visible points including junction boxes.

E. Suitable for:

1. Installation in raceways.

F. Insulation Type:

1. Single- or multi-conductor cable: XHHW.

G. Multi-conductor Overall Jacket:

1. Type: PVC (Polyvinyl chloride) or better, flame-retardant.

H. In accordance with NEMA WC 70. Cable UL listed and labeled.

I. Provide multi-conductor power cable with integral ground conductor. Size ground conductor in accordance with NFPA 70.

2.06 MULTICONDUCTOR CONTROL CABLE

A. Type:

1. Shielded.

2. Labeled type TC when installed in cable tray.

B. Size: 16 AWG, minimum.

C. 600-volt rated insulation unless specified otherwise.

D. Color Coding:

1. Colored insulation or jacket compound. Do not apply color coatings to insulation or jacket surface.

2. In accordance with NEMA WC 57, Table E-2.

E. Suitable For:

1. Installation in raceways.
2. Installation in cable trays when required by specifications.

F. Insulation Type:

1. XHHW.

G. Multi-conductor Overall Jacket:

1. Type: PVC (Polyvinyl chloride) or better, flame-retardant.
2. Jacket thickness:
   a. 16 AWG conductors: 45 mils for 12 conductor or less. 60 mils for greater than 12 conductor.
   b. 14 AWG conductors: 45 mils for 9 conductor or less. 60 mils for greater than 9 conductor.

H. In accordance with NEMA WC 57. Cable UL listed and labeled.

2.07 INSTRUMENTATION CABLE

A. Type: Twisted, single-pair or twisted triad shielded or multiple individual twisted shielded pairs or twisted triads with overall shield.

B. Suitable for installation in raceways and cable tray.

C. Size: 16 AWG or as shown.

D. Insulation: 300-volt, 105 degrees C, minimum.

E. Single-Pair or Triad Shield: Aluminum-Mylar tape providing 100 percent coverage with a tinned, stranded copper drain wire.

F. Multiple Pair or Triad Shield:

1. Pair or triad shield: Aluminum-Mylar tape providing 100 percent coverage with a tinned, stranded copper drain wire.
2. Cable shield: Aluminum-Mylar tape providing 100 percent coverage with a tinned, stranded copper drain wire.
3. Each pair or triad sequentially numbered for identification.

G. Jacket: Black PVC with rip-cord.

2.08 TELECOMMUNICATIONS CABLE

A. CAT 6A Cable:

1. Provided per ICEA S-116-732, UL 444, and TIA-568-C.2.
2. Four twisted pair, minimum size 24 AWG conductors.
3. Provide communications rated cabling for installation purpose it is installed (plenum, riser, general purpose, etc.) in accordance with NFPA 70.
4. UL listed and labeled for wet locations.
5. Cable shall be imprinted with manufacturers name or identifier, flammability rating, gauge of conductor, transmission performance rating and length marking at regular intervals.

B. Special Purpose Cable:

1. With approval of COR.

2.09 ENCLOSURE WIRING

A. Wiring inside switchboards, switchgear, control panels, etc., not intended for use extending outside of enclosure. Enclosure wiring for instrumentation or telecommunications shall maintain characteristics of those cable types.

B. Minimum 600-volt rated insulation.

C. Type:

1. NEC type SIS.
2. VW-1 Rated.
3. UL Listed.

D. Minimum Conductor Size:

1. 14 AWG.
2. Conductor sized according to application requirements, and in accordance with requirements and recommendation in NEC.

E. Insulation Type:

1. XLPE, or equal.

F. Insulation Color:

1. White or Grey, unless special purpose application.

G. Flame Test Rating:

1. UL 1581 VW-1.

2.10 COAXIAL CABLE

A. Provided per TIA-568-C.4.

B. Type: Radio Communication.

C. RG Type: 58/U.

D. Impedance: 50 Ohms.

E. All copper center conductor.

F. All-copper braided shield with 95 percent braid coverage.

G. Jacket: Low Smoke Polyvinyl Chloride (PVC).

H. For use in radio circuits.

2.11 ACCESSORIES

A. Single Conductor Markers:

1. Type: Heat-shrink, machine printable sleeve.
2. Color: White with Black text.
3. Text size: As large as practical but at least 7 point (0.06-inch).
4. Be 1-inch in length, minimum, and have diameter suitable for installation on intended conductor.

B. Multi-conductor Cable Tags:

1. Type: Cross-laminated polyethylene film or Nomex®. Be resistant to water, oil, solvent, abrasion, and tearing.
2. Rectangular shape and have minimum dimensions of 2- by 0.5-inches.
3. Color: White with Black text.
4. Text size: As large as practical but at least 16 point (0.16-inch).
5. Attach to cable with standard nylon self-locking tie wraps or cable ties.

C. Terminal Connectors for Control and Instrumentation Cable:

1. Heavy-duty, insulated, pressure-crimp-type with ring tongues. 600-volt, pressure-crimp pin type may be used where use of ring tongue connectors is not practical.
2. Tin-plated copper.
3. Serrated inner barrel.
4. UL listed.
5. Compatible with conductor size and type of cable for which it is used.

D. Telecommunications Cable Faceplates and Connectors:

1. Terminate unshielded twisted pair (UTP) cables in accordance with TIA-568-C.1 and TIA-568-C.2 with T-568A color configuration.
2. Use registered jack (RJ) 45 modular connector.
3. Provide each location with 2 port RJ-45 faceplates unless otherwise noted on drawings.
4. Faceplate color shall be White.

E. Innerduct Duct Liners:

1. Conform to UL 2024 and applicable ASTM standards.
2. UL Riser-Rated.
3. Size: 1-inch.
4. Flexible.
5. Non-metallic.
6. Corrugated:
   a. Sequential marked footage.

PART 3 EXECUTION

3.01 INSTALLATION

A. Install in accordance with NFPA 70, IEEE C2, BICSI-TDMM, NECA/BICSI 568, TIA 568-C.2, UL, and manufacturer's requirements and recommendations.

B. Maintain a Conductor Installation Log. Data to include:

1. Raceway identifier.
2. Conductor type and size.
   a. Insulation type.
   b. Single or Multi conductor. Multi conductor cable to identify the number of conductors included in the overall jacket.
   c. Size in AWG or KCMIL.
3. Number of conductors.
4. Length of run.

C. Maintain manufacturer recommended minimum bending radius for cables.

D. Install all telecommunications cables in raceway, cable tray or similar protected installation.

E. Provide raceway in accordance with Sections 26 05 33 – Raceway and Boxes.

F. Do not damage or chafe outer jacket material.

G. When using cable ties, do not over tighten, to ensure tie does not cut conductor insulation or cable outer jacket. Do not use cable ties to support cables.

H. Seal cable penetrations into equipment or passing through blockouts, with silicone-foam, fire-retardant type material in accordance with NFPA 70.

I. Install cable in a neat and workmanlike manner in accordance with industry standards and manufacturer requirements.

J. Cable Separation:

1. Install cables to provide separation of voltage levels, defined below, except with approval of COR.
2. Voltage Levels:
   a. 64V operating voltage and above.
   b. Below 64V operating voltage.
3. Do not mix voltages within a cable.
4. Do not install cables of different voltage levels in same raceway.
5. Do not install cables of different voltage levels in same cable tray unless separated by barrier in cable tray.

K. Cable Splicing:

1. Do not splice cables.

L. Cable Installed in Conduit:

1. Do not pull cable into conduit until they have been cleaned and are free from obstructions and sharp corners.
2. Draw clean, dry, tight-fitting rag through conduit immediately before installing cable.
3. Install cable using gradual and uniform pulling stresses. Do not exceed allowable pulling tensions and sidewall pressures as recommended by cable manufacturer.
4. Install cable to prevent cuts or abrasions in insulation or protective covering and kinks in cable.
5. When lubricant is needed as an aid to pulling, use only soapstone or other suitable lubricant that is not injurious to cable insulation.
6. When mechanical cable pulling equipment is used, use tension meter release mechanism to ensure pulling tension remains below tensile strength of cable.
7. Remove and replace with new cable that is damaged during installation.

8. Do not install wiring for fire alarm system in conduits, junction boxes, or outlet boxes with conductors of other systems. Conduit shall be dedicated to fire protection system.

M. Cable Installed in Vertical or Inclined Plane:

1. Install in locations shown. If not shown, install in accordance with NFPA 70.
2. Support with cable grips leaving slack spans between supports.
3. Clamp cable entering enclosures, junction boxes, or equipment with commercial cable clamps.
4. Cables shall not be installed in an open-air drop of greater than 4-feet without explicit approval of COR.

N. Cable in Boxes and Enclosures:

1. Provide slack in cable in all boxes, and enclosures. Cable should not be pulled tight against any edge or component in enclosures and boxes.
2. If cable is terminated in box or enclosure include enough spare length in terminated conductor to reach any other terminal in enclosure. In multi-panel control cabinets conductor should be able to reach any other terminal within that panel of enclosure.

O. CAT 6A cables:

1. Install in accordance with BICSI-TDMM, TIA-568-C.2, NFPA 70, and UL standards as applicable.
2. Install per manufacturer's instructions and do not exceed manufacturers' cable pull tensions for copper cables.
3. Install back boxes for RJ-45 connectors.
4. Do not install power and communication cable in same conduit.
5. No cable shall contain unterminated elements.
6. Do not untwist Category 6 cables more than 1/2-inch from point of termination to maintain cable geometry.
7. Terminate networking cables in T568A configuration per TIA-568-C.2.

P. Direct buried cables:

1. Install in accordance with standard drawing 40-D-5370.
2. Only cable utilized for building premise applications can be direct buried.

Q. Grounding:

1. Provide one non-active conductor, grounded at both ends, in each multi-conductor control cable.

2. Ground shielding of each shielded control cable on both ends directly to equipment ground bus.
3. Ground shielding of instrumentation and telecommunications cable only to source equipment ground bus.
4. Ground spare conductors by wire jumpers from equipment terminal block points to equipment ground bus.
5. Provide grounding and bonding in accordance with TIA J-STD-607.

R. Wiring Methods:

1. Terminate control and instrumentation cable with terminal connectors.
2. At termination point of multi-conductor cables, form conductors into neat packs and tie with self-locking cable ties.
3. Do not combine current and potential transformer circuits in same multi-conductor cable with control circuits.
4. Clamp cable entering equipment with commercial type cable clamps.
5. Leave sufficient length cable ends to make connections conveniently to equipment, fixtures, and devices.
6. Provide 5-conductor cable for each three-phase current and each potential transformer circuit. Use No. 10 AWG conductors for current transformer circuits.
7. Retain sufficient length of conductors in a current transformer cable length to reach farthest terminal used to select current transformer ratios.
8. Retain spare single conductors at each end of multi-conductor cable in length equal to longest single conductor of multi-conductor cable.
9. Terminate spare conductors of multi-conductor cable at terminal blocks. Ground spare conductors by using wire jumpers between terminations and equipment ground bus.
10. Run both positive and negative leads of direct-current circuit in same cable.

3.02 CABLE AND CONDUCTOR IDENTIFICATION

A. Power Cable:

1. Identify power conductors that are service conductors, panelboard and switchboard feeders, motor control center feeders, and motor power conductors with colored insulation or colored phase tape in accordance with this section. An additional conductor marker is not required.
2. Provide single-line marker on load end of feeder and branch-circuit conductors that originate at panelboards, switchboards, and motor control centers. Marker to include designation of source equipment and circuit number.

B. Conductor Markers:

1. Text to be machine or computer generated. Handwritten text is not acceptable.
2. Provide individual conductors of multi-conductor control cable and instrumentation cable, with conductor marker. Print conductor designation, as shown on approved schematic diagram, on first line. Print conductor destination and device terminal number on second line.
3. Single line conductor marker will be acceptable provided conductor designation is enclosed in parenthesis followed by conductor destination.
4. Do not heat shrink marker onto conductor. Allow marker to rotate about conductor.
5. Mark both end of conductors with port number and room location of connected switch/punch down block.
6. Provide markers for spare conductors of multi-conductor cables. Marker to include cable designation and the word "SPARE". Numerically sequence spare conductor markers e.g. (1CSA-CSB-SPARE1, 2CSA-CSB-SPARE2, etc.).

C. Multi-Conductor Cable Tags:

1. Tag multi-conductor cables at each end.
2. Text to be machine or computer generated. Handwritten text is not acceptable.
3. Mark tags with cable designations as shown on approved wiring and interconnection diagrams. Cable designation to be single-line of text that includes cable number, originating equipment designation, and destination equipment designation. Develop cable designations when not shown. Examples of cable designations are:
   a. 1MCA-DV1 – First cable from motor control center MCA to discharge valve No. 1).
   b. 3MCB-ACP – Third cable from motor control center MCB to auxiliary control panel ACP.
4. Attach tags to cable with self-locking tie wraps or cable ties.

3.03 CONTRACTOR FIELD QUALITY CONTROL

A. Notify COR, in writing, of date, time, and cables to be tested at least 5 working days before testing. Testing dates to be mutually agreeable between Contractor and COR.

B. Perform testing after installation, but before connection to equipment.

C. Test cables in large groups to minimize number of testing sessions.

D. Perform following tests:

1. Continuity test: Test continuity of each conductor prior to performing insulation resistance test.
2. Insulation resistance tests:

a. Measure insulation resistance between each conductor and station ground with all other conductors in same cable or conduit grounded.

b. Test voltage: 1,000 volts direct-current, minimum.

c. Minimum acceptable insulation resistance: R in MΩ = (rated voltage in kV + 1) x 1,000/length in feet.

3. Record following test data on test report for each conductor tested:

a. Date of test.

b. Name or names of Contractor's personnel who performed test.

c. Name of Government inspector who witnessed test.

d. Conductor identification.

e. Continuity.

f. Megohms between conductor and ground.

g. Total length of conductor.

E. Perform the following tests - CAT 6A cable:

1. Test equipment shall conform to TIA-1152.

2. Inspect network cabling terminations for T568A color configuration.

3. Perform testing for each outlet.

4. Performance test:

a. Perform Category 6 link tests in accordance with TIA-568-C.1 and TIA-568-C.2.

b. Tests shall include wire map, length, insertion loss, NEXT, PSNEXT, ELFEXT, PSELFEXT, return loss, propagation delay, and delay skew.

F. Inspect coaxial connector integrity.

G. If any cable or conductor fails testing, remove, and replace cable.

END OF SECTION

SECTION 26 05 20
GROUNDING AND BONDING

PART 1 GENERAL

1.01 MEASUREMENT AND PAYMENT

A. Cost:

1. Include in price offered in the Price Schedule for Complete Electrical System.

1.02 REFERENCE STANDARDS

A. ASTM International (ASTM)

1.	ASTM B3-13(2018)	Soft or Annealed Copper Wire
2.	ASTM B8-11(2017)	Concentric-Lay-Stranded Copper Conductors, Hard, Medium-Hard, or Soft
3.	ASTM B228-11a(2016)	Concentric-Lay-Stranded Copper-Clad Steel Conductors

B. Institute of Electrical and Electronic Engineers (IEEE)

1.	IEEE 80-2013	Safety in AC Substation Grounding
2.	IEEE 81-2017	Measuring Earth Resistivity, Ground Impedance, and Earth Surface Potentials of a Ground System
3.	IEEE 142-2010	Grounding of Industrial and Commercial Power Systems
4.	IEEE 837-2014	Qualifying Permanent Connections Used in Substation Grounding
5.	IEEE C2-2017	National Electrical Safety Code (NESC)

C. National Fire Protection Association (NFPA)

1.	NFPA 70-2023	National Electrical Code (NEC)

D. Underwriters Laboratories (UL)

1.	UL 467-2013	Grounding and Bonding Equipment

1.03 SUBMITTALS

A. Submit in accordance with Section 01 33 00 – Submittals and Section 01 33 26 – Electrical Drawings and Data.

B. RSN 26 05 20-1, Approval Drawings and Data:

1. Manufacturer's catalog data.

C. RSN 26 05 20-2, As-built Drawings:

1. Specification drawings indicating as-built changes made to grounding systems.

D. RSN 26 05 20-3, Test Reports.

PART 2 PRODUCTS

2.01 MATERIALS

A. Ground Cable:

1. Annealed bare-copper cable:
   a. ASTM B8, Class B.
   b. Solid wires used in forming copper cable: ASTM B3.
2. Copper-clad steel cable: ASTM B228.
3. Concentric stranded.
4. Sizes:
   a. As indicated on drawings.
   b. Where not shown, minimum sizes:
      1) Ground risers and electrode conductors: 4/0 AWG.
      2) Equipment grounding conductors:
         a) Major equipment: Equal in size to electrode conductors.
         b) Minor equipment: 4 AWG.
      3) Electrode interconnecting conductors: Equal in size to electrode conductors.

B. Ground Rods:

1. Type: Solid, copper-clad steel:
   a. Bond 0.010-inch thick layer of copper inseparably to steel core.
2. Length: 10-feet.
3. Diameter: 3/4-inch, nominal.
4. In accordance with UL 467.

2.02 ACCESSORIES

A. Cable Connectors:

1. Welded or bolted solderless type.
2. Current-carrying capacity: Equal to cable with which they are used.
3. Connectors for ground cables, including fittings, lugs, bolts, nuts, and washers: Copper alloy containing not more than 4 percent zinc.
4. Bolted solderless type connectors: IEEE 837.
5. Ground connectors that will be direct buried or embedded in concrete: Listed for direct burial use in accordance with requirements of UL 467.

B. Ground Plates:

1. High-strength, high-conductivity, cast-copper alloy.
2. Four-hole type, except where indicated on drawings.
3. Suitable for concrete construction.

C. Flexible Copper Braid:

1. Flat, extra flexible, tinned, pure copper braid.
2. Un-plated, seamless, pure copper ferrules formed into a rectangular shape on each end.
3. Outdoor ampacity: 400 amperes, minimum.
4. Overall length: Suitable for application.

2.03 WELDING PROCESS

A. Use Cadweld, Thermoweld, or equivalent exothermic process.

B. Molds and Weld Metal:

1. Use fresh stock from same manufacturer.
2. Weld metal and starting material: No significant quantities of hazardous ingredients.

PART 3 EXECUTION

3.01 INSTALLATION

A. Install in accordance with NFPA 70, IEEE C2, and this Section.

B. Make grounding connections in accordance with standard drawings 40-D-4334, 40-D-4335, and 40-D-4753; and as shown.

C. Use at least 4 AWG stranded bare copper as equipment grounding conductors.

D. Do not connect equipment grounding conductors directly to steel reinforcing bars.

E. Ground or Bond as applicable:

1. Electric motors.
2. Metal enclosures for electrical equipment.
3. Unit substations.
4. Elevated steel tanks.
5. Regulating tanks.
6. Air chambers.
7. Shielding and armor on insulated conductors.
8. Steel structural columns.
9. Pumping plant service yard fence.
10. Metal structures located within 200-feet of power or distribution line centerlines.

F. Grounding Electrodes at Pumping Station:

1. Use steel reinforcing bar system within concrete floor at bottom of sump as grounding electrode:
   a. Steel reinforcing bars used for electrodes:
      1) Diameter, minimum: 1/2-inch.
      2) Length, minimum: 20-feet.
      3) Concrete encasement, minimum: 2-inches thick.
2. Ground risers:
   a. Connect grounding electrodes to ground bus.
   b. Install at least 6 ground risers for connection to grounding electrodes, unless shown otherwise.
3. Ground bus:
   a. Embed in floor of structure.
   b. Connect equipment grounding conductors, grounding system risers, and building structural steel to ground bus.
4. Ground ring:
   a. Attach to ground rods to serve as grounding electrode for water storage tanks.
   b. Encircle each tank completely.
   c. Bury in direct contact with earth.
   d. Depth: Not less than 2 1/2-feet.
   e. Conductor: At least 20-feet of 4/0 AWG stranded bare copper.

G. Service Yard Fence:

1. Ground service yard fence, gate posts, and gate frames.
2. Ground fence fabric on each side of corner post or location where fabric is not continuous.

H. Ground Electrode Interconnections:

1. Install minimum of two physically separate grounding electrode tie conductors as interconnections between ground electrodes of pumping plant ground system and elevated steel tank as shown.
2. Installation depth: At least 2 1/2-feet.
3. Separation: At least 10-feet.

I. Ground Rods:

1. Drive ground rods vertically until tops of rods are within 2-inches above installation location of ground cables to which rods will be connected.
2. If solid rock is encountered within 3-feet of subgrade, grout ground rod into 1 1/4-inch vertical hole such that top of rod is within 2-inches above installation location of ground cables to which rod will be connected.
3. If solid rock is encountered deeper than 3-feet below subgrade, drive ground rod to refusal at approximately 45-degree angle, then bend ground rod horizontally such that top of rod is within 2-inches above installation location of ground cables to which rod will be connected.

J. Connections:

1. Make all ground connections between equipment, miscellaneous metalwork, and ground plates whether or not such grounding connections are shown.
2. Number of grounding connections for equipment may be one, two, or more in some cases.
3. Remove paint, enamel, scale, oil, grease, or other foreign nonconductive material from point of contact on metal surfaces before making ground connections.
4. Repair damaged or removed paint or galvanizing material on metal finishes.
5. Make ground connections that are direct buried or embedded in concrete using an exothermic process and in accordance with manufacturer’s instructions:
   a. In accordance with manufacturer's instructions.
   b. Inspect in accordance with pocket handbook A7D *Installers and Inspectors Guide for CADWELD® Electrical Connections* written by ERICO® Products, Inc., Cleveland, Ohio.
   c. Remove and replace rejected connections.

K. Excavate, place, and compact backfill in accordance with Sections 31 23 10 – Earthwork for Site and Structures and 31 23 02 – Compacting Earth Materials, respectively.

3.02 CONTRACTOR FIELD QUALITY TESTING

A. Test Resistance of Grounding System:

1. Notify COR in writing at least 3 working days in advance of time of test in order that test may be witnessed by COR.
2. Perform test no sooner than 30-days after completion of structural concrete work.
3. Measured resistance: Less than 5 ohm.
4. Use fall of potential method in accordance with section 8.2.1.5 of IEEE 81.
5. Testing device:
   a. Earth resistance tester:
      1) Heavy-duty, low-resistance type with direct-reading and direct-current ohmmeter as described in bulletin No. 25 and any one of bulletins Nos. 25J, 25J-2, and 25T, all by James G. Biddle Company; 3 point electronic Vibroground® by Associated Research, Incorporated; or equal.
      2) Capable of measuring ground resistance to an accuracy of 0.5 ohms or better.
6. Test performance:
   a. Initial distance between remote current electrode (C) and grounding system under test (X): At least six times longest diagonal dimension of grounding system.
   b. Distance between electrode C and electrode X if grounding electrode system consists of one or two ground rods: At least 100-feet or as directed by COR.
   c. Beginning at electrode X, drive potential-reference electrode (P) into ground at a number of test points on a straight line between electrode X and electrode C.
   d. Distance between test points: Approximately 5 percent of actual distance between electrodes X and C.
   e. Continuously log apparent resistance readings for each test point and plot curve of resistance versus distance to ensure that electrode C location is giving acceptable results as indicated in IEEE 81.
   f. Measure and record test points until reaching electrode C or as directed by COR. If plot of resistance -vs- distance curve indicates remote current electrode is in area of influence of grounding system, increase distance between electrode C and grounding system, and measure and record new set of test data.

g. Allow 40 calendar days after receipt of grounding system resistance test reports for Government to determine location and size of any additional grounding is required.

h. Retest grounding system resistance in accordance with these paragraphs if additional grounding is added.

END OF SECTION

This page intentionally left blank.

SECTION 26 05 33
RACEWAYS AND BOXES

PART 1 GENERAL

1.01 MEASUREMENT AND PAYMENT

A. Cost:

1. Include in price offered in the Price Schedule for Complete Electrical System.

1.02 REFERENCE STANDARDS

A. American National Standards Institute (ANSI)

1.	ANSI C80.1-2020	Electric Rigid Steel Conduit (ERSC)

B. Institute of Electrical and Electronics Engineers (IEEE)

1.	IEEE C2-2023	National Electrical Safety Code (NESC)

C. National Electrical Manufacturers Association (NEMA)

1.	NEMA 250-2014	Enclosures for Electrical Equipment (1,000 Volts Maximum)
2.	NEMA FB 1-2014	Fittings, Cast Metal Boxes, and Conduit Bodies for Conduit, Electrical Metallic Tubing, and Cable
3.	NEMA TC 2-2020	Electrical Polyvinyl Chloride (PVC) Tubing and Conduit
4.	NEMA TC 3-2016	Polyvinyl Chloride (PVC) Fittings for Use with Rigid PVC Conduit and Tubing

D. National Fire Protection Association, Inc. (NFPA)

1.	NFPA 70-2023	National Electrical Code (NEC)

E. Underwriters Laboratories, Inc. (UL)

1.	UL 360-13	Liquid-tight Flexible Steel Conduit
2.	UL 6-2007	Electrical Rigid Metal Conduit – Steel
3.	UL 651-11	Schedule 40 and 80 Rigid PVC Conduit

1.03 DESIGN REQUIREMENTS

A. Determine/verify size of junction and pull boxes, fabricated sheet steel boxes, and precast handholes in accordance with NPFA 70.

PART 2 PRODUCTS

2.01 RACEWAYS

A. Rigid Metal Conduit (RMC):

1. ANSI C80.1.

B. Rigid Polyvinyl Chloride Conduit (PVC):

1. Product Description: Schedule 80 PVC conduit. Conduit and elbows furnished with integral bell end.
2. Length: Manufacturer's standard 10- or 20-foot lengths.
3. Temperature Rating: Equal to or greater than temperature rating of enclosed conductors.
4. Conduit: Conform to NEMA TC 2, NFPA 70, and UL 651. Fittings and conduit bodies conform to NEMA TC 3, NFPA 70, and be UL listed.

C. Liquidtight Flexible Metal Conduit (LFMC):

1. Interlocked steel construction with PVC jacket.
2. Ultra-violet resistant.
3. Color: Black.
4. Conform to NFPA 70 and UL 360.
5. Fittings conform to NEMA FB 1.

2.02 OUTLET BODIES, DEVICE BOXES, JUNCTION AND PULL BOXES

A. Outlet Bodies and Fittings:

1. Material: Cast iron or malleable iron.
2. Covers: Cast or sheet metal.

B. Cast Devices Boxes: Type FD and GRF manufactured by Cooper Crouse-Hinds; or equal, having the following essential characteristics:

1. Rectangular or round, deep-wiring device outlet boxes with threaded hub connections for rigid steel conduit.
2. Material: Iron alloy.
3. Number of gangs: As required.
4. Provide plugs for unused openings.
5. Extension rings: Iron alloy with corrosion-resistant finish.

C. Fabricated Sheet Steel Boxes:

1. Used as junction and pull boxes.

2. Sheet steel thickness: No. 14 United States Standard gauge, minimum.
3. Boxes installed in pumping plant building to be NEMA Type 12. Boxes installed outdoors to be NEMA type 4.
4. Hinged cover with oil-resistant gasket.
5. Finish: Manufacturer's standard grey coating.
6. Conform to NEMA 250.

2.03 CONDUIT FITTINGS

A. Expansion-deflection Couplings:

1. Furnish for movement in any direction.
2. Watertight, raintight, concrete tight.
3. Deflection and expansion: 3/4-inch, minimum.
4. Angular misalignment: 30-degrees, minimum.

B. Watertight Conduit Hubs:

1. Myers hub manufactured by Cooper Industries, Crouse-Hinds Division, Syracuse, NY, catalog series ST-, STA- and SSTG-; catalog series HUB- and HUBG- manufactured by Appleton, Rosemont, IL; catalog series CHM- manufactured by O-Z Gedney, Rosemont, IL; or equal with the following essential characteristics:
   a. Suitable for terminating rigid steel electrical conduit through the walls of enclosures.
   b. Recessed O-ring for raintight connection.
   c. In accordance with NEMA FB-1.
   d. Galvanized malleable iron.
   e. Insulated throat.

2.04 ACCESSORIES

A. Fittings required to complete electrical conduit systems. Includes, caps, connectors, couplings, unions, nipples, reducers, elbows, pipe plugs, bondnuts, and any other fittings.

B. Devices required to fasten, clamp, attach, and support conduit in place. Includes supports and clamps complete with bolts, washers, and nuts.

C. Locknuts and Bushings:

1. Locknuts: Steel. Die cast locknuts are not acceptable.
2. Bushings: Insulated and pressure cast or malleable iron. Grounding bushing to be lay-in saddle type.

D. Conduit Riser Grips:

1. Suitable to support vertical cable runs in rigid steel conduit.
2. Single weave closed or split mesh type.
3. Mesh material: Tin-coated bronze strands.

E. Conduit Tags: Round brass or stainless-steel.

F. Polyethylene Warning Tape:

1. Type: Heavy-duty polyethylene, detectable underground warning tape.
2. Width: 6-inches.
3. Color: Red.
4. Copy: Continuously imprinted with "CAUTION BURIED ELECTRIC LINE BELOW" or equivalent wording.
5. Suitable for direct burial.

G. Thread Lubricant: Lithium, graphite, or zinc-based material designed to inhibit corrosion and to lubricate metal-to-metal joints.

H. Electrical duct seal for sealing ends of raceways.

I. Protective Sealant: Water repellant, and resistant to peeling and cracking.

J. PVC Solvent Cement: In accordance with NEMA TC 2 and conduit manufacturer's recommendations.

K. Corrosion Protection Tape:

1. ScotchrapTM 51 All-Weather Corrosion Protection Tape manufactured by 3M, St. Paul, MN, and Plymouth Plywrap 11 Vinyl Pipe Wrap manufactured by Plymouth Ruber Company, Canton, MA; or equal, having the following essential characteristics:
   a. Thickness: 20 mils minimum.
   b. Material: Polyvinyl chloride (PVC).

PART 3 EXECUTION

3.01 INSTALLATION

A. Conduit Type: As listed below unless shown otherwise:

1. PVC Conduit: For direct-buried conduit.
2. PVC Conduit: For conduit installed beneath concrete slab floors.
3. Rigid Metal Conduit: Exposed conduit, unless shown otherwise. Vertical risers through concrete slab floor.

4. Liquid tight Flexible Metal Conduit:
   a. Use flexible conduit for connections to equipment that is subject to vibration, where flexibility is required, or where shown.
   b. Maximum length of a flexible conduit section is not to exceed 24-inches.

B. Install as shown and in accordance with NFPA 70 and IEEE C2.

C. Determine routing of exposed, buried, and embedded conduit when not shown.

D. Determine exact location of embedded conduit stub-ups based on equipment being furnished.

E. Bends:
   1. Make smooth, gradual bends to permit pulling insulated conductors without undue stress or damage to conductors or conduit.
   2. Ensure bends are free from kinks, indentations, or flattened surfaces.
   3. Make metal conduit bends onsite with radii in accordance with NFPA 70.
   4. Bend conduit cold to prevent damage to protective coating.

F. Remove burrs and sharp corners at ends of metal conduit.

G. Coat male threads of rigid metal conduit joints with suitable graphite or zinc sealing material before making joints.

H. Tighten conduit joints securely to ensure electrical continuity and to prevent entrance of moisture or foreign material.

I. Install with necessary fittings and supports.

J. Make transitions from PVC conduit to RMC with suitable fittings designed for application.

K. Tighten conduit to electrical equipment mounted on tubular metal structures securely and support rigidly in place by conduit clamps, hex head nuts, and threaded 3/8-inch stud fasteners driven by powder-actuated tools.

L. Install expansion couplings where exposed or embedded conduits cross expansion or contraction joints. Install expansion couplings and expansion-deflection couplings in accordance with manufacturer's instructions.

M. Exposed Conduit Runs:
   1. Straight and parallel with each other and with centerlines of room or structure.
   2. Support conduit rigidly in place and in accordance with NFPA 70. Do not weld conduit to conduit supports or structural steel.

N. Conduit Beneath Concrete Slab Floors:

1. Transition horizontal runs of PVC conduit to rigid metal conduit before making 90-degree bends using appropriate conduit fitting.
2. Make 90-degree bend with rigid metal conduit and extend vertically through concrete slab floor. Ensure conduit risers are vertically plumb.
3. Wrap rigid metal conduit with anti-corrosion tape from transition coupling to at least 6-inches above concrete slab floor.
4. Apply manufacturer's recommended pipe primer to rigid metal conduit before wrapping with corrosion tape.
5. Apply anti-corrosion tape in accordance with manufacturer's instructions and recommendations.
6. Make adequate provisions to protect anti-corrosion tape wrap from physical damage during backfill operations.

O. Conduit Embedded in Concrete:

1. Conduit to be rigid steel (RMC) type.
2. Conduit not to displace more than 3 percent of gross area of cross-section of slab (Calculate cross sectional area as 12-inches times slab thickness).
3. Conduit outside diameter to be no larger than 1/3 of overall thickness of slab in which they are embedded.
4. Conduit to be spaced at least 3 diameters or widths on center.
5. Conduit to occupy middle third of cross-sectional depth of slab in which they are embedded, where possible.
6. Protect ends of conduit with coupling and plug to prevent entrance of concrete, sand, or other foreign material.
7. Tie conduit from reinforcing bars or otherwise support to prevent sagging while concrete is being placed.
8. Conduit stub-ups:
   a. Minimum length above finished floor: 4-inches, not including coupling.
   b. Terminate conduit with coupling and plug until ready to connect remaining conduit sections. Replace plug with bushing or Chase-type nipple before installing insulated conductors.
   c. Approximately 1-foot of horizontal embedded conduit and entire vertical stub-up to be plastic-coated rigid steel conduit.
9. Seal conduit boxes with rubber gasketed blank cover. Clean concrete from inside of conduit boxes immediately after forms are removed.
10. Swab conduit within 24-hours after removal of forms with clean dry rags until conduit is thoroughly cleaned and dried.

11. Terminate ends of conduit that do not terminate at boxes with couplings and pipe plugs or insulating bushings and caps.

P. Direct-Buried Conduit:

1. Depth: 24-inches, minimum unless shown otherwise.
2. Install 2-inches of sand around conduit.
3. Install detectable warning tape 18-inches above buried conduit.
4. Backfill and compact trench in accordance with Section 31 23 22 – Pipe Trench Earthwork.

Q. Conduit Terminations:

1. Make conduit terminations to indoor boxes, cabinets, and panel boards in accordance with standard drawing 104-D-254.
2. Make conduit terminations to outdoor boxes with watertight conduit hubs. Use of locknuts, bushings, or bushed nipples at outdoor conduit terminations is not acceptable.
3. Install bushings or Chase-type nipples on ends of conduit to protect insulation of insulated conductors from abrasion.
4. Install locknuts and bond nuts to provide tight ground connections between conduit and boxes, panel boards, and cabinets.
5. Make terminations of conduit beneath substation switchgear, motor control equipment, motor control centers, and floor mounted cabinets with grounding bushings. Connect grounding bushing to equipment ground bus with a 4 AWG bare-copper conductor.
6. Seal ends of conduit terminations with electrical duct seal to prevent air circulation and entrance of vermin through conduits into boxes, panel boards, or cabinets. Install duct seal to a minimum depth of 1-inch.

R. Conduit Tags:

1. Provide metal conduit tags for conduit terminations.
2. Stamp or engrave tag with conduit number as shown on “As-Built” cable and conduit schedule.
3. Permanently attach tag to conduit with wire and metal crimp-type connector.

END OF SECTION

This page intentionally left blank.

SECTION 26 05 90
WIRING CHECKOUT AND TESTS

PART 1 GENERAL

1.01 MEASUREMENT AND PAYMENT

A. Cost:

1. Include in price offered in the Price Schedule for Complete Electrical System.

1.02 REFERENCE STANDARDS

A. National Fire Protection Association (NFPA)

1. NFPA 70-2023 National Electrical Code (NEC)

1.03 DEFINITIONS

A. Qualified Person: In accordance with Article 100 of NFPA 70.

1.04 PERFORMANCE REQUIREMNENTS

A. Tests:

1. Demonstrate proper interaction between equipment through cabling interconnections and verify these interconnections are accurately documented.
2. In addition to tests required by Section 26 05 10 – Conductors and Cables.

B. Furnish materials, including test instruments, required for checkout and testing.

C. Make wiring changes and drawing revisions to ensure there are no discrepancies between check prints, and internal equipment wiring and external cabling.

D. Replace defective equipment and make device setting adjustments as required for operation of electrical systems in accordance with specifications and manufacturer's instructions.

E. If required during testing, remove, and replace wire connections.

F. Make wiring changes, wire tag revisions, and other repairs or revisions during testing session discrepancy is discovered.

G. Perform wiring checkout, and operational and functional tests in presence of COR.

1.05 QUALIFICATIONS

A. Testing Personnel:

1. Competent and qualified person to perform wiring checkout, and operational and functional testing.
2. Have thorough knowledge of electrical equipment, installation, and drawings.
3. Qualified to operate equipment being tested.

PART 2 PRODUCTS

Not Used

PART 3 EXECUTION

3.01 FIELD QUALITY CONTROL

A. Notify COR in writing 10-days in advance of each testing session.

B. Provide the following at time wiring checkouts and tests are performed:

1. Two complete sets of full-size (ANSI D-size) electrical schematic and wiring diagram check prints for equipment being tested:
   a. One set to be used and maintained by COR.
   b. One set to be maintained by Contractor and used to produce final drawings.

C. Perform wiring checkout and tests in accordance with the following:

1. Wiring checkout:
   a. Use electrical schematic and wiring diagram check prints to perform internal wiring check of equipment.
   b. Use electrical schematic and wiring diagram check prints to perform wiring check of external cabling.
   c. Perform a complete wire-by-wire, contact-by-contact, terminal-by-terminal (point-to-point) check of circuit logic.
   d. Verify agreement with approved wiring diagrams. Revise to reflect circuit logic corrections made during checkout.
   e. Verify agreement with approved schematic diagrams. Revise to reflect circuit logic corrections made during checkout.
   f. Verify contact configuration and contact numbering.
   g. Verify continuity of wiring.
   h. Verify proper wire tagging at ends of conductors and cables.
   i. Check conductors for insulation damage. Perform additional insulation resistance test of damaged conductors.

2. Operational and functional testing:
   a. Perform after completion of wiring checkout of equipment being tested.
   b. If required, adjust, and calibrate protective devices in accordance with specifications, and manufacturer's instructions and recommendations.
   c. Check electrical systems and controls for proper sequence of operation, correct adjustments and settings, and agreement with schematic diagram.
   d. See Section 01 80 15 Commissioning and Testing.

END OF SECTION

This page intentionally left blank.

SECTION 26 24 20
CONTROL BOARDS

PART 1 GENERAL

1.01 MEASUREMENT AND PAYMENT

A. Control and Communication System:

1. Payment: Lump-sum price offered in the Price Schedule.

1.02 ACRONYMS

A. ASCII: American Stand Code for Information Interchange.

B. DNP: Distributed Network Protocol.

C. GFCI: Ground-Fault Circuit Interrupter.

D. HART: Highway Addressable Remote Transducer.

E. I/O: Input/Output.

F. IP: Internet Protocol.

G. OIT: Operator Interface Terminal.

H. PAC: Programmable Automation Controller.

I. P&ID: Piping and Instrumentation Diagram.

J. PLC: Programmable Logic Controller.

K. RAM: Random Access Memory.

L. RTU: Remote Terminal Unit.

M. TCP: Transmission Control Protocol.

1.03 REFERENCE STANDARDS

A. International Electrotechnical Commission (IEC)

1. IEC 61131-3 2013 — Programmable Controllers - Part 3: Programming Languages

B. International Society of Automation (ISA)

1.	ISA 62381 -2011	Automation Systems in the Process Industry – Factory Acceptance Test (FAT), Site Acceptance Test (SAT), and Site Integration Test (SIT)

C. National Electrical Manufacturer's Association (NEMA)

1.	NEMA 250-2018	Enclosures for Electrical Equipment (1000 Volts Maximum)
2.	NEMA FU 1-2012	Low Voltage Cartridge Fuses
3.	NEMA ICS 1-2000 (R 2015)	Industrial Control and Systems: General Requirements
4.	NEMA ICS 2-2000 (R 2005)	Industrial Control and Systems: Controllers, Contactors and Overload Relays, Rated 600 Volts
5.	NEMA ICS 5-2017	Industrial Control and Systems: Control Circuit and Pilot Devices
6.	NEMA ICS 6-1993 (R 2016)	Industrial Control and Systems: Enclosures
7.	NEMA KS 1-2013	Heavy Duty Enclosed and Dead-Front Switches (600 Volts Maximum)
8.	NEMA WC 70-2009	Power Cables Rated 2000 Volts or Less for the Distribution of Electrical Energy

D. National Fire Protection Association (NFPA)

1.	NFPA 70-2023	National Electric Code (NEC)
2.	NFPA 780-2026	Standard for Installation of Lightning Protection Systems

1.04 SYSTEM DESCRIPTION

A. All control panels, enclosures, cabinets, etc., supplied by Contractor.

B. Provide plant control and data instrumentation for all transmitters, electrical actuators, switches, devices and equipment specified in P&ID drawings 1695-D-62381 through 1695-D-62386 and similar devices provided by Contractor in prefabricated pump station:

1. PLC-based control panels that relay Modbus commands and instrumentation between Contractor-supplied prefabricated pump station (booster site) and the existing Cutter Lateral Water Treatment Plant and Regulation Tank 3 site.

    a. Contractor-supplied system shall NOT require hard-wired interface for controls.

    b. Interface with transducers, transmitters, switches, and motor operators specified in Section 33 16 45 – Welded Steel Water Storage Tank.

c. Interface with transducers, transmitters, switches, motor operators, devices, and equipment provided by Contractor as specified in Section 22 11 35 – Prefabricated Pump Station.

d. Interface with existing control system at Cutter Lateral Water Treatment Plant.

1) Send and receive instrumentation between existing control system and Contractor-supplied control system.

2) Send alarm signals from Contractor-provided PLC at booster pump building to Cutter Lateral Water Treatment Plant.

3) Modbus list for existing control system is provided in Section 51 XX XX.

e. Display on OIT at Regulation Tank 3 site:

1) Status of both tank mixers (ON/OFF, Loss of Power, Failure/Fault).

2) Regulation Tank 3 water levels.

3) Results of chemical analyzer.

f. Display on the OIT located at Contractor-supplied prefabricated pump station:

1) Status of booster pump (RUN/STOP, HAND/OFF/AUTO, FAULT).

2) Status of equipment, devices, and instrumentation specified in Section 22 11 35 – Prefabricated Pump Station, including valves, switches, transmitters, and flowmeter.

a) Indicate flow direction, flow rate, and total flow.

3) Status of start and stop interlocks.

4) Regulation Tank 3 water levels.

5) Dzilth-Na-O-Dith-Hle (DZ) Regulation Tank water levels.

a) Government shall provide DZ Regulation Tank water levels via Modbus. Coordinate with COR.

2. Two-way, point-to-point radio-based communication system between Contractor-supplied control panels and existing control system at Cutter Lateral Water Treatment Plant.

a. Acceptable communication protocols between PLCs are described in drawing 1695-D-62387.

b. Provide radio communications system that is compatible with transmitting and receiving data/control commands through existing radio system at Water Treatment Plant.

c. Provide lightning protection system for all Contractor-provided radio equipment in accordance with NFPA 780. Lightning protection shall include as a minimum: surge protective device and strike termination device.

C. Provide motor control components, including starters and contactors to operate mixers specified in Section 33 16 45 – Welded Steel Water Storage Tank.

1.05 DESIGN REQUIREMENTS

A. Provide latest hardware offered by respective manufacturers at time of award.

B. Utilize off the shelf system components and software packages.

C. Programmable controllers, I/O cards, communication cards, and back planes supplied by Contractor shall same manufacturer. Minimize number of different types and models utilized.

D. Design layout of control boards in accordance with NEMA ICS and NFPA 70, including:

1. Select size of control circuit transformer.
2. Select correct fuses for control circuit transformers.
3. Select correct motor overload heater elements.
4. Provide OIT at prefabricated pump station control board.

E. Provide pushbuttons, indicating lights, control relays, timing relays, and all similar electrical equipment furnished under this Section of same manufacturer and type as those furnished and installed in equipment in Section 22 11 35 – Prefabricated Pump Station and Section 33 16 45 – Welded Steel Water Storage Tank.

F. Operation of booster pump at prefabricated pump station, as specified in Section 22 11 35 – Prefabricated Pump Station:

1. When in MAN mode, run booster pump based on RUN and STOP push buttons at pump station.
2. When in AUTO mode, Contractor-provided PLC at prefabricated pump station shall automatically control booster pump to provide water level at DZ tank based on operator-adjustable setpoint.
   a. Automatic tank level control shall utilize lead/lag pump control with operator-adjustable tank level setpoint that automatically turn on or off the two booster pumps.
   b. Control DZ tank level using tank level instrumentation (primary) and pressure instrumentation (backup) at DZ tank
      1) Turn on booster pump only if water pressure at booster pump intake is above operator-adjustable threshold.

2) Turn off booster pump if the DZ tank level is above setpoint.

3) When communications link to DZ tank level sensor is down, use pressure sensing on the discharge side of booster pump to infer the missing tank level as backup control.

4) Pressure control operator shall operate an operator-adjustable number of pumps in a timed cycled operation, with the pumps cycling on and off for operator adjustable durations. This timed cycle operation will run the pumps based on low discharge pressure being maintained for an operator-adjustable period of time while the pumps are off.

5) The pressure control operation shall be able to be disabled by the operator.

c. The sequence of which pumps are the lead and lag pumps shall be operator-settable and include the ability for the operator to set the system to automatically cycle the pump sequence to change the lead and lag pumps.

d. Provide software interlock with operator-adjustable time delay to ensure that only one pump at a time can start, and that the startup sequence for one pump has completed before the next pump begins its startup sequence.

e. If running pump fails, or pump fails to start when called, run standby booster pump.

f. Startup and shutdown sequence and system interlocks require configuration of valves and any support equipment/systems for safe and proper operation, startup and shutdown of pumps and facility.

g. Provide operator-adjustable start and stop level set-points to be adjusted in elevation units for both upstream and downstream tanks.

h. If downstream tank is below adjustable level set-point and upstream tank is above adjustable level, next pump in sequence shall be called to start.

i. Limit number of motor starts per hour to maximum specified per pump motor manufacturer.

j. Monitor motor run times and total number of starts for each motor.

3. When in OFF mode, do not run any booster pump.

4. Pump startup:

a. Verify pump start interlocks are met.

b. Start (lead) pump.

c. Open valve once pressure between pump discharge and valve meets minimum threshold.

5. Pump shutdown:

a. Close valve.

b. Valve is fully closed.

c. Stop pump.

6. Pump start interlocks:

a. Include at a minimum, the following interlocks:

1) Low suction pressure alarm is not active.

2) High discharge pressure alarm is not active.

3) Associated pump discharge valve is closed at the start of the pump startup sequence.

4) Associated pump discharge valve actuator is in 'Remote'.

5) No active trip signals from the electrical protection devices.

6) Pump control is in 'Auto' at the control switch on the pump starter.

7) Pump does not exceed the maximum number of starts per hour or the minimum time between starts.

8) Pump is not locked out.

7. Pump shutdown interlocks:

a. Include at a minimum, the following automatic pump trip conditions:

1) Trip signal from the electrical protection devices.

2) Low suction pressure maintained for a user-settable minimum time delay.

3) High discharge pressure maintained for a user-settable minimum time delay.

4) Failure to open the associated pump discharge valve after the pump has started.

b. When control mode is AUTO and there is prolonged loss of radio communications (operator-settable time duration) from DZ tank level or Regulation Tank 3 level, shutdown pump safely.

1) After pump shutdown, alarm failure to Cutter Water Lateral Pumping Plant and engage communications failure interlock.

2) Do not re-engage pump operation until operator has manually reset the communications failure interlock.

8. Include a system of interlocks to:

a. Prevent improper and hazardous actions of the control system.

1) Provide maximum flexibility of system operation, maintenance, testing, and calibration while providing safe operating conditions.

9. Provide modifiable setpoints and control variables, including alarm setpoints, delays, and control setpoints that are modifiable by operator at OIT.

a. Sufficient setpoints shall be included to allow operator adjustment of system through desired operating range.

b. All values referred to as 'setpoints' in these Specifications shall be modifiable from OIT.

10. Provide logic to minimize the requirement for operator intervention:

a. Designed to incorporate permissives, which ensure that prerequisite conditions for safe operation are met prior to allowing equipment to start, open, or close, as appropriate.

b. Incorporate interlocks to prevent equipment from operating in unsafe or potentially damaging conditions.

11. Grouped Control Logic:

a. Provided where multiple components are required to operate in a prescribed combination or sequence.

b. Start or stop motors and open or close valves in a predetermined sequence without requiring operator action during the process.

12. Provide control logic to mitigate bad quality or out of range signals. Logic shall drive devices to a safe state, substitute a value, or hold last value as appropriate for application.

13. Fault checking shall be included and cause appropriate response, change over and/or alarm.

14. Upon initial system power up, or system power restoration, all systems shall be in manual with outputs in "off" or fail-safe mode.

15. Provides rapid shut down and emergency shutdown of equipment.

G. Utilize Government-provided radio spectrum for communications.

H. Provide support tower for radio antenna.

I. Perform communication system study including radio path study and link budget calculations to determine radio system components and location necessary to establish communications link with existing radio system at Cutter Lateral Water Treatment Plant and all Contractor-provided equipment.

1. Determine radio system components, quantities, and location requirements.

2. Identify required antenna heights.

3. Identify required antenna gains.

4. Effective Isotropic Radiated Power (EIRP) shall not exceed maximum allowed for service band.

1.06 SUBMITTALS

A. Submit the following in accordance with Section 01 33 00 - Submittals and Section 01 33 26 - Electrical Drawings and Data.

B. RSN 26 24 20-1, Manufacturer's Technical Data:

1. Manufacturer's technical catalog data, including indication of which part or model is being supplied.

C. RSN 26 24 20-2, Radio Study Report:

1. Radio antenna parameters identified in this Section.
2. Radio antenna locations.

D. RSN 26 24 20-3, Shop Drawings and Manufacturer's Data:

1. Equipment layout drawing.
2. Bill of Material.
3. Nameplate List.
4. Proposed locations for Control Boards as specified in this specification.

E. RSN 26 24 20-4, Schematic and Wiring Diagrams (Government Format):

1. Provide schematic diagrams which are specific to the installation. Do not use "typical" schematic diagrams to cover multiple installations or pieces of equipment.
2. Schematic diagram to show all portions of the actual circuitry, regardless of whether the circuitry is located within the enclosure or at another location.
3. Provide wiring diagrams for the installation.

F. RSN 26 24 20-5, Graphical Display Samples:

1. Provide representative screenshots of OIT displays, including main screen, configuration screens, alarm logs, status screens, I/O screens, and authentication screens.
2. Sample images must be in color and at high resolution to show all necessary details.

G. RSN 26 24 20-6, Factory Acceptance Test Procedure for Control System:

1. Notify government at least 60 days in advance when tests are to be performed.
2. Describe mock functional test for automation controls to meet these specifications.
3. Describe the methods used to simulate I/O feeds where required for full testing and demonstration purposes.

H. RSN 26 24 20-7, Factory Acceptance Test Report for Control System:

1. Provided to the Government within 14 days of the completion of the FAT.
2. Certification of performance and result of system control and monitoring testing, including the following:
   a. Results for all tests approved by the Government in the Factory Acceptance Testing Procedure.
   b. Results for any other tests performed during the Factory Acceptance Test.

I. RSN 26 24 20-8, Final Drawings and Manual(s):

1. Incorporating as-built drawing modifications.
2. Operations and Maintenance Instruction Manual(s).

1.07 DELIVERY, STORAGE, AND HANDLING

A. Handle and store equipment in accordance with manufacturer's instructions. Include copy of these instructions with equipment at time of shipment.

1.08 EXTRA MATERIALS

A. Furnish a set of special tools and accessories required for installation, normal operation, and maintenance. Include:

1. Contractor and manufacturer recommended tools and accessories.
2. Tools and accessories recommended for field maintenance and those designed to aid in diagnosis, maintenance, repair and replacement of supplied equipment.

B. Furnish following extra materials:

1. One contactor of each size and type used.
2. Two LED lamps of each type and color used.
3. One relay of each type and model used.
4. One control switch of each type used.
5. Contractor or manufacturer recommended spare parts.
6. Replace spare parts used during installation, testing, and commissioning process to provide complete set of spare parts.

C. For projects with programmable controllers furnish the following spare parts:

1. I/O Cards: Minimum of 5 percent spare of each type used at the facility, no less than one (1) of each size and type used at each facility.
2. Network and Communication Cards: Minimum of one (1) spare of each type of control system component.

3. Programmable Controllers: Minimum of one (1) spare of each type of control system component.
4. Back planes: Minimum of one (1) spare of each type of control system component.
5. Communications Converters: Minimum of one (1) spare of each type of communications converter used.
6. Miscellaneous Components: Minimum of one (1) spare of each type of control system component.
7. OIT: One spare of each type used.

D. Where Contractor has performed programming or supplied software for the supplied components furnish two copies of system software. Include:
1. Software required to re-install software required for the system to function properly.
2. Copies supplied shall contain the final version of all furnished software.
3. Operating system software, where applicable.
4. Database and application software, where applicable.
5. Licensing in the Government's name for all software.
6. Provide a complete restorable external backup of every software component.

PART 2 PRODUCTS

2.01 ENCLOSURE

A. Type 4X for outdoor panels and Type 12 for indoor panels, in accordance with NEMA 250.

B. Constructed from sheet steel no lighter than 14 MSG (Manufacturer's Standard Gage).

C. Seams continuously welded and ground smooth.

D. Continuous door hinge.

E. Oil-resistant gasket attached with oil-resistant adhesive and held in place with steel retaining strips.

F. Pad-lockable handle.

G. Wall-mountable.

H. Size: Contractor to determine
1. All new enclosures shall include a minimum of 25 percent spare space.

I. Furnish with swing panel.

J. Locations:

1. Provide one interior control panel at prefabricated pump station specified in Section 22 11 35 – Prefabricated Pump Station.
2. Provide one interior control panel at existing building at Regulation Tank 3 site. Tank is specified in Section 33 16 45 – Welded Steel Water Storage Tank.

K. Nameplate:

1. Conform to Standard Drawing No. 40-D-6234.
2. Engraving: As indicated on drawings.
3. Attach nameplate to control board enclosure with machine screws. Use of adhesives for attaching nameplates is not acceptable.

L. Provide 120 V AC LED light fixture sufficient to illuminate panel interior for each enclosure.

M. Provide 120 V AC GFCI receptacle in each enclosure.

N. Provide thermostatically controlled cabinet space heaters to control condensation in all cabinets not in a temperature-controlled environment, or subject to condensation.

O. Enclosure design shall allow free and easy access to internal components.

P. Where required enclosures shall have louvers, or ventilation, as required to maintain temperature of equipment within manufacturer recommended range. Interior temperature shall be maintained at most 10 degrees F below maximum operating temperature of internal devices at maximum ambient temperature:

1. Louvers and openings shall be equipped with screens and changeable filter material to prevent the entrance of dust, insects and rodents.

2.02 RADIO COMMUNICATIONS

A. Model FibeAir IP-20C as manufactured by Ceragon, having the following essential characteristics:

1. Frequency band: 11 GHz
2. Outdoor rated
3. Network port: 100/1000 Mbps
4. Compatible with existing radio system at Cutter Lateral Water Treatment Plant.

B. Model AM-6-11W-CIRC-RS as manufactured by Ceragon, having the following essential characteristics:

1. Frequency band: 11 GHz

2. Outdoor rated
3. Physical size: Contractor to determine
4. Compatible with radio modem specified in this Section.

C. Transient Protection Units

1. Voltage protection level: 40 volts, peak.
2. Peak Power Dissipation: 45,000 watts.
3. Thermal and short circuit protection.
4. LED status indication.

2.03 POWER DEVICES

A. Disconnect Switch

1. Flange-mounted, non-fusible, 3-pole, single-throw.
2. 208/120 volts AC, 60 amperes.
3. Switch Classification: Type HD (Heavy Duty).
4. Conform to NEMA KS 1.

B. Magnetic Contactor

1. Type: Magnetic, full-voltage, reversing.
2. Voltage: 600 volts AC, 60 Hz.
3. Contactor Coil: 120 volts AC, 60 Hz.
4. Power Contacts: Weld-resistant, double break of silver alloy.
5. NEMA rated and sized for motor horsepower loads.
6. Power contacts, contactor coil, and auxiliary contacts designed to be inspected and replaced.
7. Sufficient auxiliary contacts to perform functions indicated on drawings.
8. Conform to NEMA ICS.

C. Overload Relay

1. Type: Eutectic alloy or bi-metallic.
2. Class Designation: NEMA Class 10.
3. Manual reset type.
4. Provide one normally closed and one normally open relay contact.
5. Conform to NEMA ICS.

2.04 CONTROL DEVICES

A. Auxiliary Relays

1. Type: Self-resetting, heavy-duty, machine-tool. General purpose relays will not be accepted.
2. Contacts: Convertible with NEMA ICS 5 A600 rating.
3. Furnish two spare contacts on each relay, minimum.
4. Conform to NEMA ICS.

B. Indicating Light Assemblies

1. Type: Full-voltage, push-to-test, heavy-duty, watertight, oiltight.
2. Voltage: 120 volts AC.
3. Color: As indicated on Drawings.
4. Lamp: Full voltage, high visibility LED (Light Emitting Diode).
5. Conform to NEMA ICS.

C. Pushbuttons

1. Type: Momentary, heavy-duty, watertight, oiltight.
2. Contact Rating: NEMA ICS 5 A600.
3. Mounting: 30.5 millimeter hole.
4. Pushbutton color and head type:
   a. STOP pushbutton: Red with extended head.
   b. All other pushbuttons: Black with flush head.
5. Conform to NEMA ICS.

D. Selector Switches

1. Type: Heavy-duty, watertight, oiltight.
2. A600 contact rating in accordance with NEMA ICS 5.
3. 30.5 millimeter mounting holes.
4. Provide with contact arrangements indicated on drawings.
5. Conform to NEMA ICS.

E. Timing Relay

1. Solid-state type.
2. 120 volts AC.
3. Wiping action contacts.

4. Adjustable timing ranges, settings and contact arrangement as indicated on drawings.
5. Current carrying and interrupting capacity for intended application.

F. Legend Plates

1. Equipment manufacturer's standard or custom legend plate engraved with legend shown on drawings.

2.05 WIRING DEVICES

A. Ground Bus

1. Same requirements as from Section 26 24 42 – Distribution Panelboards.

B. Terminal Blocks

1. Same requirements as from Section 26 24 42 – Distribution Panelboards.

2.06 OPERATOR INTERFACE TERMINAL (OIT)

A. Touchscreens with user interface displays.

B. Color display.

C. Size: 15-inch, minimum.

D. Modbus TCP/IP, RS485, RS232.

E. Vijeo Designer Development Tools, Magelis OS.

F. Supply, install, and program OIT at following locations:

1. Inside existing building at Regulation Tank 3 site.
2. Inside Contractor-provided prefabricated pump station.

G. Graphic Displays:

1. Support types of tasks and activities required of operator.
2. Separate graphic display screens shall be designed and provided for screens with different functions and locations.
3. Display names and designations for each piece of equipment supplied by Contractor, on graphics.
4. Use consistent design philosophy across graphic displays, however specific functions desired for individual screens may require unique arrangements of graphics and information.
5. User interaction techniques shall be developed in accordance with the following guidelines:

a. Clear, with graphics consistent in method they present similar information.

b. Graphic functions: Standardized, intuitive, straight forward with minimal user manipulation.

6. Provide feedback on completion of an action and/or of failure to complete an action.

7. Component Depiction:

a. Utilize standard shapes for components. Shapes should be simple and avoid unnecessary detail.

b. Show status of components clearly and consistently.

8. Alarms and indications of abnormal situations shall be clear, prominent, and consistently distinguishable.

2.07 PROGRAMMABLE CONTROLLERS

A. Modicon M580 controller, as produced by Schneider Electric with the following essential characteristics.

1. Includes embedded Ethernet port.

2. Minimum of 4 MB RAM on controller. Provide additional RAM and memory storage as required to support device functionality.

3. Provide capability of programming control logic using the following programming languages, in accordance with IEC 61131-3:

a. Ladder Diagram.

b. Function Block Diagram.

c. Structured Text.

B. Modular Design:

1. Chassis.

2. Power Supply.

3. Processor, Communications, and I/O configurable modules based on hard-wired and TCP/IP connected equipment.

C. Provide the controllers with a minimum of 40 percent spare capacity, including memory utilization, processing capacity, and other functions.

D. I/O:

1. Provide I/O as required to meet specified functionality.

2. Provide 10 percent spare installed I/O of each size and type at each I/O location.

E. Provide hardware, software, and design to provide fully functional bi-directional data links to other systems, components, PLCs, PACs, and networks as required.

1. System shall provide support for the following minimum communication protocols:
   a. DNP 3.0 per IEEE 1815.
   b. Modbus Serial (RTU and ASCII).
   c. Modbus Network (TCP).
   d. HART (as required).
   e. Additional communication protocols as required to provide communication links to Contractor-supplied equipment.

2.08 FINISHES

A. Control Board Enclosure: Manufacturer's standard finish.

2.09 CONTRACTOR SOURCE QUALITY TESTING

A. Test at factory for correct operation and mechanical adjustment.

2.10 SOURCE QUALITY ASSURANCE

A. Government will inspect control boards prior to shipment to site.
   1. Notify Government inspector at least 21 days in advance of inspection date.

PART 3 EXECUTION

3.01 INSTALLATION

A. As indicated on drawings.

B. Mount control boards such that any device that needs access is no higher than 78-inches above floor.

END OF SECTION

SECTION 26 24 41
DISTRIBUTION PANELBOARDS

PART 1 GENERAL

1.01 MEASUREMENT AND PAYMENT

A. Cost:

1. Include in price offered in the Price Schedule for Complete Electrical System.
   a. Includes removal and replacement of circuit breakers in existing panelboard at Tank 3 site.
   b. This section does not apply to equipment provided under Section 22 11 35 - Prefabricated Pump Station.

1.02 REFERENCE STANDARDS

A. National Fire Protection Association (NFPA)

1. NFPA 70-2023 — National Electrical Code (NEC)

B. Underwriters Laboratories, Inc. (UL)

1. UL 489-16 — Safety Molded-Case Circuit Breakers, Molded-Case Switches, and Circuit-Breaker Enclosures

1.03 SUBMITTALS

A. Submit in accordance with Section 01 33 00 – Submittals and Section 01 33 26 - Electrical Drawings and Data.

B. RSN 26 24 41-1, Approval Data:

1. Manufacturer's Technical Data.

1.04 REGULATORY REQUIREMENTS

A. UL listed and labeled.

1.05 DELIVERY, STORAGE, AND HANDLING

A. Handle and store equipment in accordance with manufacturer's instructions. Include copy of these instructions with equipment at time of shipment.

PART 2 PRODUCTS

2.01 MOLDED CASE CIRCUIT BREAKER

A. UL Listed with existing panelboard.

B. Thermal-magnetic type with inverse-time trip characteristics on overload and instantaneous trip on short circuit.

C. Voltage: 240/120 volts, as required.

D. Contractor to verify number of breaker poles necessary.

E. Frequency: 60-hertz.

F. Interrupting Rating: 14,000 symmetrical RMS amperes, minimum.

G. Arc quenchers.

H. Quick-make and quick-break toggle mechanisms.

I. Trip-free operating handle.

J. Circuit breakers shall be lockable. A lockable breaker is accomplished by using circuit breaker lock that is listed for use with circuit breaker and that allows breaker to trip but does not allow tampering with breaker.

K. Single operating handle. Use of handle ties on multiple-pole circuit breakers is not acceptable.

L. Equip with padlock attachments for locking breakers in “OFF” position.

M. Conform to UL 489.

PART 3 EXECUTION

3.01 INSTALLATION

A. Install circuit breakers in existing panelboard in accordance with manufacturer’s instructions and recommendations.

B. Make conduit and wiring connections.

C. Provide new typed panel schedule with updated load information.

END OF SECTION

SECTION 26 42 00
CATHODIC PROTECTION SYSTEMS

PART 1 GENERAL

1.01 MEASUREMENT AND PAYMENT

A. Corrosion System(s):

1. Payment: Lump sum price offered in the Price Schedule.

1.02 REFERENCE STANDARDS

A. Association for Materials Protection and Performance (AMPP) (formerly NACE)

1.	NACE/ASTM G193-2022	Standard Terminology and Acronyms Relating to Corrosion
2.	NACE SP0169-2024	Control of External Corrosion on Underground or Submerged Metallic Piping Systems
3.	NACE SP0196-2020	Galvanic Anode Cathodic Protection of Internal Submerged Surfaces of Steel Water Storage Tanks
4.	NACE TM0497-2022	Measurement Techniques Related to Criteria for Cathodic Protection on Underground or Submerged Metallic Piping Systems
5.	NACE CP3	Cathodic Protection Technologist Course Manual

B. ASTM International (ASTM)

1.	ASTM B3-13(2024)	Soft or Annealed Copper Wire
2.	ASTM B843-2018e1	Magnesium Alloy Anodes for Cathodic Protection
3.	ASTM C33/C33 M-24a	Concrete Aggregate

C. American Welding Society (AWS)

1.	AWS D1.1/D1.1M-2020	Structural Welding Code - Steel
2.	AWS D1.6/D1.6M-2017	Structural Welding Code – Stainless Steel

D. Bureau of Reclamation (USBR)

1.	USBR M-47	Guide to Concrete Repair, Second Edition available at: https://www.usbr.gov/tsc/techreferences/ma

nds/mands-pdfs/Guide2ConcreteRepair2015_Final.pdf

E. National Electrical Manufacturer's Association (NEMA)

1. NEMA 250-2020 Enclosures for Electrical Equipment (1,000Volts Maximum)

1.03 DEFINITIONS

A. Structure: Feature(s) on project being protected from corrosion (see System Description).

B. Bonded Dielectric Coating:

1. Protective barrier coating system with high electrical resistivity bonded directly to underlying structure, acting to physically and electrically isolate metallic structure from electrolyte.

C. Corrosion Monitoring: Process of monitoring structures for indications of corrosion and evaluates the effectiveness of corrosion mitigation measures.

D. Cathodic Protection:

1. Galvanic Anode Cathodic Protection: Reduction of corrosion of metal in electrolyte by galvanically coupling to more anodic metal:

a. Also referred to as Sacrificial Protection.

E. Electrolyte: Electrically conductive solution, such as soil or water:

1. Terms for specific conductive solutions may be substituted for "electrolyte".

F. Reference Electrode: Electrode whose open circuit potential is constant under similar conditions of measurement; used for measuring relative potentials of other electrodes (e.g., protected structures):

1. Sometimes referred to as reference half-cell.

2. Copper/Copper Sulfate Reference Electrode (CSE) is often used for field measurements.

G. Structure-to-Electrolyte Potential, (structure-to-soil and structure-to-water potentials): Potential of structure in electrolyte as compared to potential of reference electrode contacting same electrolyte.

1. Static Structure-to-Electrolyte Potential: Structure-to-electrolyte potential determined without any external current (also referred to as native structure-to-electrolyte potential):

a. Prior to energizing cathodic protection system, and with no galvanic couple, pH cell, interference currents, or like present; or

b. After such current source has been disconnected for an extended time.

2. Uncorrected Structure-to-Electrolyte Potential: Structure-to-electrolyte potential determined with cathodic protection system energized and cathodic protection current flowing:
   a. Also referred to as Protective Potential (ON Potential) and may contain significant IR drop error.
3. Polarized Structure-to-Electrolyte Potential: Structure-to-electrolyte potential determined on energized cathodic protection system immediately after cathodic protection current is interrupted:
   a. Also referred to as "instant off" structure-to-electrolyte potential.
4. Polarization: Change from static or native potential as result of current flow across electrode/electrolyte interface:
   a. Also considered difference between polarized and native potentials.

1.04 QUALIFICATIONS

A. Cathodic Protection Technologist: Certified by Association for Materials Protection and Performance (AMPP) formerly known as NACE International.

1.05 SYSTEM DESCRIPTION

A. Provide Corrosion Monitoring Systems for the following features:
   1. Metallic yard pipe, fittings, and associated metalwork.
   2. Regulating Tank site 3 – tank B.

B. In accordance with Section 26 42 11 – Buried Galvanic Anode Cathodic Protection:
   1. Booster Station site metallic yard pipe, fittings, and associated metalwork.

C. In accordance with Section 26 42 15 –Galvanic Anode Cathodic Protection for Welded Steel Tanks:
   1. Regulating Tank site 3 – tank B

1.06 QUALITY

A. Installation and testing conducted by or under direction of Cathodic Protection Technologist. Other qualified individuals may assist installation and testing personnel.

B. Manufacturer's Standards: Comply with manufacturer's recommendations and standards unless otherwise specified.

C. Materials, Installation, and Testing:
   1. Consistent with sound corrosion engineering principles and practices in accordance with NACE TM0497, NACE SP0169, NACE SP0196, and NACE CP3.

1.07 SYSTEM PERFORMANCE

A. Provide corrosion-engineering services to furnish, install, and test corrosion monitoring and cathodic protection systems:

1. Include electrical continuity bonds, test stations, isolation joint flange kits, and accessory equipment and features as directed in this specification or otherwise indicated.

B. Corrosion Monitoring Systems shall have capacity to:

1. Provide minimum service-life of 20-years for all components.

C. Cathodic Protection Systems:

1. Provide minimum service-life of 20-years for system and all components.
2. Maintain on all locations of protected metallic structures, with reference to copper/copper sulfate electrode placed in contact with electrolyte close to structure:
   a. Polarized structure-to-electrolyte potential of -0.850 volts or more negative.
   b. Alternately, at discretion of Government, -0.100 volts of polarization if the -0.850-volt criterion cannot be obtained due to extenuating circumstances (e.g., on bare or poorly coated structures).
   c. Polarized potential at any point on dielectrically coated structure not more negative than -1.100 volts.
   d. Modified under the presence or possible presence of microbial induced corrosion (MIC), such as with sulfate-reducing bacteria, to the following:
      1) -0.950 volts or more negative on structure.

1.08 SUBMITTALS

A. Submit in accordance with Section 01 33 00 – Submittals.

B. RSN 26 42 00-1, Certification and Data:

1. Copy of Cathodic Protection Technologists' AMPP certification for personnel performing or directing installation and testing of corrosion monitoring system(s).
2. Manufacturer’s Data:
   a. Test station.
   b. Anode junction boxes.
   c. Metallurgical bonding system.
   d. Dielectric coating system for bonds.
   e. Cables.

1) Structure.

2) Anode.

3) Joint bonds.

f. Cable identification labeling system.

g. Isolation Joint Flange Kits (IJFK).

h. Wax Tape (if necessary)

i. Conduit:

1) Test station.

2) Anode junction box(es).

3) For extending existing anode and structure cables

j. Warning tape.

k. Resin splicing kits for existing cables.

C. RSN 26 42 00-2, Final Data

1. Information and data including:

a. Data for all continuity, isolation, corrosion monitoring, and cathodic protection required for the project.

b. List of cable identifications in test station(s) and anode junction box(es) as applicable.

c. Test equipment and methods utilized.

d. Placement of reference electrode during each test.

e. Tests results.

f. Installation photos.

2. As-built and Final Drawings:

a. Provide as-built and final installation drawings in accordance with Section 01 78 30 – Project Record Documents:

1) Electrical continuity bonds and isolation details.

2) Locations of test station(s), anode junction box(es), anode(s), conduit(s), and cable runs:

a) Locations shall be given using unique identifier and GPS coordinates.

b) Location shall include type of test station and conduit per Drawings 1695-D-62391, 1695-D-62393,1695-D-62394, and 1695-D-62395.

PART 2 PRODUCTS

2.01 CABLES

A. Conform to ASTM B3.

B. Manufactured not more than 24-months prior to notice to proceed.

C. Single-Conductor: Stranded, plain, annealed copper cable.

D. Cable Insulation:

1. Rated for 600-volts and direct immersion or burial.
2. High Molecular Weight Polyethylene (HMWPE) outer jacket with minimum thickness of 0.100-inch:
   a. Black, unless otherwise noted.

E. Suitable lengths to permit installation from terminus to terminus (e.g., structure-to-test station or structure-to-structure) free of splices and without stress, unless otherwise specified.

Table 26 42 00A – Cable Gauge

Gauge (AWG), or larger:	Use for	Additional Notes
No. 14	Permanent Ref Electrodes	Yellow Insulation
No. 12	Structure	Black Insulation
No. 12	Galvanic Anodes	Black Insulation
No. 6	Electrical Continuity Joint Bonds (Jumper)	Black Insulation

2.02 CABLE SPLICE KITS

A. In-line Resin Splice Kit: Scotchcast™ In-Line Resin Splicing Kits – 82A Series, manufactured by 3M, 2501 Hudson Rd, Maplewood, MN 55144; or equal, having the following essential characteristics:

1. Insulate and moisture-seal single conductor, non-shielded cables through 5 kV.
2. Kit contains a snap-together mold body which fits around the splice:
   a. Mold large enough to encapsulate split bolt connector.
3. Epoxy electrical insulating resin in a Unipak™ container.
4. Suitable for direct burial.

B. Wye Resin Splice Kit: Scotchcast™ Wye Resin Splicing Kits – 82-B1, manufactured by 3M, 2501 Hudson Rd, Maplewood, MN 55144; or equal, having the following essential characteristics:

1. Insulates and moisture seals wye splices, non-shielded cables through 5 kV.

2. Kit contains a snap-together mold body which fits around the splice:
   a. Mold large enough to encapsulate split bolt connector.
3. Epoxy electrical insulating resin in a Unipak™ container.
4. Suitable for direct burial.

2.03 BONDS

A. Electrical Continuity Joint Bonds:
   1. Insulate copper cable in accordance with cable requirements in Article 2.01, Cables.
   2. Size of bond specified in Table 26 42 00A – Cable Gauge.

B. Metallurgical Bonds:
   1. Exothermic Metallurgical Bonds:
      a. Exothermic metallurgical bond system manufactured by ThermOweld, 6100 S. Yale Ave., STE 1110, Tulsa, OK 74136; or equal, having the following essential characteristics:
         1) Designed for:
            a) Corrosion monitoring and cathodic protection systems.
            b) Metallic substrate material.
            c) Bond orientation.
         2) Exothermic reaction produces molten copper, which produces permanent, high conductivity connection.
         3) Uses special alloy to provide minimum heat effect on substrate material.
         4) Current carrying capacity equal or better than that of conductor.

2.04 DIELECTRIC COATING FOR BONDS

A. Dielectric Material: ThermOcap PC, manufactured by ThermOweld, 6100 S. Yale Ave., STE 1110, Tulsa, OK 74136; or equal, having the following essential characteristics:
   1. Specifically designed for cathodic protection systems.
   2. Integrated primer or applied with primer coat, as needed.
   3. Approved dielectric coating material.
   4. Suitable for intended environment.

B. Refer to Section 09 96 20 – Coatings.

2.05 TEST STATION ENCLOSURE

A. Refer to Drawing(s) 1695-D-62391 for details.

B. Test Stations: TESTOX Series 100 or Series 700, manufactured by Gerome Electric Supply Co., 336 E. Main St., Uniontown, PA 15401; or equal, having the following essential characteristics:

1. Specifically constructed for cathodic protection system installations and intended environment.
2. Pipe-mounted, above-ground type.
3. Material type shown on Drawing(s) 1695-D-62391.
4. Protected as required for permanency (e.g., bollards).
5. Secured to pipe with setscrew or threaded.
6. Enough terminals for number and size of cables and required accessories: Minimum 5 terminals.
7. Equip with 0.01-ohm calibrated shunt for each anode such that current output of each anode can be determined.
8. Equip with variable resistors for each anode (if necessary) such that current output of each anode can be adjusted.

C. Test station cables in accordance with cable requirements in Article 2.01, Cables.

2.06 ANODE JUNCTION BOX ENCLOSURE

A. Refer to Drawing(s) 1695-D62391, 1695-D-62394, and 1695-D-62395 for details.

B. Having the following essential characteristics:

1. Specifically constructed for cathodic protection system installations.
2. Enclosed within a NEMA 250, Type 3-R, lockable cabinet constructed of No. 16-gauge or thicker galvanized steel or fiberglass, weatherproof, lockable, and vented for heat dissipation.
3. Equip with 0.01-ohm calibrated shunt for each anode.
4. Equip with variable resistors of adequate electrical rating for each anode such that current flow of each anode can be adjusted as required within 125 percent of one another, without overheating variable resistor.
5. Protected as required for permanency (e.g., bollards).
6. Enough terminals (20 terminals minimum) with associated hardware for number and size of cables.
7. Engraved 1/4-inch minimum NEMA Grade C phenolic panel.
8. Solderless, pressure-type terminals.

9. Identified terminals.

10. Equip with combination bracket for pole or wall mounting.

2.07 BOLLARDS AND MOUNTING POSTS FOR TEST STATION AND ANODE JUNCTION BOX

A. Steel Pipe:

1. In accordance with Section 05 50 00 – Metal Fabrications:

   a. Pipe size indicated on Drawing(s) 1695-D-62391.

B. Painting:

1. Mounting post coated or galvanized in accordance with Section 09 96 20 – Coatings.

2. Bollard coated in accordance with Section 09 96 20 – Coatings.

C. Concrete:

1. In accordance with applicable requirements of Section 03 30 00 – Cast-in-Place Concrete.

2.08 ISOLATION JOINT FLANGE KIT

A. Isolation kit manufactured by GPT Industries, 4990 Iris Street, Wheat Ridge, CO 80033; or equal, with the following essential characteristics:

1. Consist of an isolating gasket, bolt sleeve, and one or more isolating washer.

2.09 WAX TAPE FOR BURIED ISOLATION JOINT FLANGE KIT

A. Wax Tape: Wax-Tape® #1 Non-firming Anticorrosion Wrap manufactured by Trenton Corporation, 7700 Jackson Road, Ann Arbor, MI 48103; or equal, with the following essential characteristics:

1. Remains pliable.

2. Designed for belowground applications.

3. Designed for use with cathodic protection.

2.10 SAND BACKFILL

A. Sand Backfill: ASTM C33, fine aggregate.

2.11 WARNING TAPE

A. Polyethylene warning tape for anode cables:

1. Minimum 3-inches wide.

2. Red or yellow with black lettering.

3. Suitable for direct burial.
4. Print full length of tape with the following:

"Caution –Cathodic Protection Cable Buried Below"

PART 3 EXECUTION

3.01 GENERAL INSTALLATION

A. Installation and testing shall be performed or directed by Cathodic Protection Technologist certified by AMPP.

B. Installation details indicated on Drawing(s) 1695-D-62391, 1695-D-62392, 1695-D-62394, and 1695-D-62395.

C. Electrical isolation:

1. All structures to be cathodically protected shall be electrically isolated from other extraneous metal (e.g., casings, foreign structures, and rebar in concrete).
2. Isolation Joint Flange Kits:
   a. Specifically located:
      1) To isolate booster plant from yard pipe both upstream and downstream of pumping plant.
      2) Installed on inlet and outlet pipe at first and last flange respectively near booster plant floor.
      3) As shown on Drawing 1695-D-62367.
   b. Install isolation joint flange kits in accordance with Drawing 1695-D-62392:
      1) Test each bolt and flange before and after burial to ensure isolation is satisfactory.
      2) Encase isolation joint flange kit installations with wax-tape if installed in soil.

D. Dielectric materials, other than non-metallic carrier pipe, that might cause shielding of cathodic protection current (e.g., plastic debris) shall not be left in excavation with structure.

E. Cable:

1. Inspect for insulation defects prior to backfilling.
   a. Replace cable if insulation is damaged.
2. Install without kinks, stresses, and/or splices.
3. Buried applications:

a. Horizontal segments:

1) In accordance with Drawing 1695-D-62392.

2) Minimum burial depth of cables: 30-inches:

b. Run cable through rigid galvanized conduit, test station pipe, or similar protection once cable emerges from ground.

4. Connect to test station with crimped, ring-tongue connectors.

5. Identify origin of cables terminating in an enclosure:

a. Cable identification as to the distinct originating structure or anode in accordance with Drawing(s) 1695-D-62391, 1695-D-62394, and 1695-D-62395.

b. Printed letters on shrinkable label attached to cables clearly visible within enclosure.

c. Encase printed labels in clear heat shrink tubing.

F. Structure Cables:

1. Cable information for each test station type shown on Drawing(s) 1695-D-62391.

2. Connect cables and jumper bonds to structures by exothermic metallurgical bond as shown on Drawing 1695-D-62392:

a. Make exothermic metallurgical bond in accordance with bonding supply manufacturer's instructions.

b. Bonds shall not damage linings inside pipes or fittings.

c. Test metallurgical bond integrity by striking side of weld nugget with 16-ounce hammer, in presence of COR.

d. Coat bare copper, weld nugget, and ferrous materials at metallurgical bonds with approved dielectric metallurgical bond coating.

e. Allow dielectric material to cure before repair of damaged structure coating or lining:

1) Repair dielectric coatings/linings in accordance with 09 96 20 – Coatings.

2) Repair mortar/concrete coating and lining in accordance with USBR M-47.

G. Electrical Continuity Joint (Jumper) Bonds:

1. Provide metallurgical bonds at mechanical type joints (e.g., non-welded joints) between ferrous parts to be included in cathodic protection system as indicated in this section or as necessary to ensure electrical continuity.

2. Minimum number and size of bond cables per bond joint is shown in material table on Drawing 1695-D-62392

a. Minimum of two cables per bond joint unless otherwise noted on Drawing.

3. Bond cable installed with sufficient slack to prevent stress or tugging.

a. Allow for minimum 1/2-inch of joint movement.

4. Jumper Bond Locations:

a. Between non-welded ferrous pipe sections and ferrous pipe and fittings.

b. Between stargrips and fittings for non-metallic pipe.

c. Between pipe installed under this contract and pipe installed by others: specifically:

1) Tank yard pipe not already cathodically protected.

H. Test Stations:

1. Details for each type of test station are shown in Drawing 1695-D-62391.

2. Locations:

a. Booster Station site.

b. Locations requiring galvanic anodes such as metallic fittings and structures on non-metallic pipe and segments of metallic yard pipe.

c. Isolation test stations at each buried IJFK.

d. Locate the test stations to make them readily accessible.

1) Where test stations will not likely be damaged or interfere with personnel and/or equipment (e.g., adjacent to above ground structures).

2) Exact location is subject to approval of COR.

e. As close to each current carrying structure connection as possible.

3. Permanently, uniquely, and clearly identify each test station with station number. Hand lettering inside of test station cap with a permanent marker is acceptable.

4. Terminate cables for given location within same test station enclosure.

5. Contain two cables, at minimum:

6. Protect test stations using steel Bollards:

a. Secure test station support pipe to steel Bollard with metal straps or pipe clamps.

3.02 INSTALLATION OF NEW GALVANIC ANODE CATHODIC PROTECTION SYSTEMS

A. In accordance with Section 26 42 11 – Buried Galvanic Anode Cathodic Protection.

B. In accordance with Section 26 42 15 – Galvanic Anode Cathodic Protection for Welded Steel Tanks.

3.03 RECONFIGURATION OF EXISTING GALVANIC ANODE CATHODIC PROTECTION SYSTEM

A. Remove existing test stations from yard:

1. Do not damage cables, unhook cables from test board prior to test station removal.
    a. Cables shall be identified and labeled to origin (structure or anode) prior to disconnecting.
2. Pull test station from ground, minimal excavation should be required.
    a. It is assumed concrete footers were not installed for test stations.

B. Anode Junction Boxes:

1. Details for anode junction boxes are shown in Drawing 1695-D-62391, 1695-D-62394, and 1695-D-62395.
2. Locations:
    a. Regulating Tank #3 site.
    b. Locate the junction boxes to make them readily accessible.
        1) Where junction boxes will not likely be damaged or interfere with personnel and/or equipment (e.g., adjacent to above ground structures).
        2) Exact location is subject to approval of COR.
3. Permanently, uniquely, and clearly identify each junction box. Hand lettering inside of junction box with a permanent marker is acceptable.
4. Terminate cables for given location within same junction box enclosure.
    a. Connect anode header cables to anode bus bar through individual shunts.
    b. Connect joint bond cables to structure bus bar in AJB#1 and run through PVC conduit to structure bus bar in AJB#2.
    c. Connect joint bond cables to structure bus bar in AJB#2 and run through PVC conduit to structure bus bar in AJB#3.

C. PVC Conduits:

1. Excavate trench for PVC conduits as shown in Drawings 1695-D-62391, 1695-D-62394, and 1695-D-62395.
    a. Locate all buried cables and pipe prior to excavation.
    b. Install two conduits in trench from test stations to anode junction boxes:
        1) One for anode header cables.

2) One for structure header cables.

c. Install one conduit in trench between anode junction boxes:

1) One conduit between anode junction boxes #1 and #2.

2) One conduit between anode junction boxes #2 and #3.

D. Cable splicing:

1. Attach a #12 anode header cable to anode cables in each test station using a Wye splice kit and run header cable to the appropriate anode junction box through PVC conduit.

a. Use an in-line splice kit if only a single anode cable is in the test station.

2. Attach a #12 structure header cable to structure cables in each test station using a Wye splice kit and run header cable to the appropriate anode junction box through PVC conduit.

a. Use an in-line splice kit if only a single structure cable is in the test station.

3. Terminate header cables from tests stations within nearest junction box enclosure as specified in Table 26 42 00B – Anode Junction Box Wiring and shown in Drawings 1695-D-62394 and 1695-D-62395.

Table 26 42 00B – Anode Junction Box Wiring

Anode Junction Box (AJB#)	Test Station (TS #)						
1	1A	1B	1C	1D	1E		
2	2A	2B	2C	2D	2E	2F	
3	3A	3B	3C	3D	3E	3F	3G
4	4A	4B	4C	4D	4E	5F	5G

a. Attach anode cables from test stations #5A, #5B, and #5C to a single anode header cable (renamed TS #5F anode).

b. Attach anode cables from test stations #5D and #5E to a single anode header cable (renamed TS #5G anode).

c. Attach structure cables from test stations #5A, #5B, and #5C to a single structure header cable (renamed TS #5F structure).

d. Attach structure cables from test stations #5D and #5E to a single structure header cable (renamed TS #5G structure).

E. New fittings and pipe for Tank B:

1. Electrical continuity bonding:

a. Joint bonds in accordance with bonding requirements in Article 3.01 G, Electrical Continuity Joint (Jumper) Bonds.

b. Exothermically bond together all new fittings and pipe on upstream side of tank.

c. Exothermically bond together all new fittings and pipe on downstream side of tank.

2. Structure cables:

a. Exothermically weld structure cables to new fitting on upstream side of tank and run cables to anode junction box #1.

b. Exothermically weld structure cables to new fitting on downstream side of tank and run cables to anode junction box #4.

3.04 FIELD TESTING

A. Include energizing, adjusting, and testing cathodic protection systems:

1. Buried metallic yard pipe and fittings.

2. Submerged interior of Regulating Tank 3B.

B. Perform testing in presence of COR.

C. Inform COR of date, time, and tests to be performed at minimum 5 working days prior to testing.

D. Testing equipment:

1. Portable Voltmeter:

a. Minimum input impedance of 10-megohms and capable of measuring DC voltages between plus or minus 0.1-millivolt to ±100-volts.

2. Portable $Cu/CuSO_4$ reference electrode.

3. Above ground isolation tester.

E. Verify each test station is properly labeled.

F. Testing shall include the following:

1. Record and report all readings with final test data submittal.

2. Native pipe-to-soil potentials at all test stations.

3. Verify electrical continuity.

4. Verify isolation at locations where IJFK's were installed.

G. Buried galvanic anode cathodic protection system:

1. Conduct testing in 2 testing cycles, minimum:

a. Check isolation flanges before backfilling to ensure adequate electrical isolation using appropriate equipment.

b. First Testing Cycle:

1) Prior to energizing system:

a) Test structure electrical continuity.

b) Test station integrity:

i. Determine voltage difference between cables within each test station enclosure.

c) Measure static structure-to-soil potentials of the buried metalwork:

i. At each individual test station location.

ii. Place portable reference electrode as close to buried metalwork as possible for structure-to-soil potential measurements.

iii. Ground shall be saturated with water to reduce reference cell contact resistance.

d) Measure static anode-to-soil potentials of galvanic anodes:

i. At each individual test station location.

ii. Ground shall be saturated with water to reduce reference cell contact resistance.

2) After energizing system:

a) Determine protective (uncorrected) and polarized structure-to-soil potentials in accordance with capacity requirements of this Section:

i. At each individual test station location.

ii. Place portable reference electrode as close to buried metalwork as possible for structure-to-soil potential measurements.

iii. Saturate ground with water to reduce reference cell contact resistance.

b) Determine current output of each individual anode in test stations and junction box.

c) Adjust variable resistor setting for each anode to obtain required balance of current output.

d) Determination of rectifier outputs in volts and amperes and associated tap settings.

e) Test for cathodic interference if system installed is impressed current:

i. Area is known to have potential AC and DC cathodic interference issues.

ii. Notify foreign pipeline owner and OGR 30-days prior to interference testing in order to interrupt energized cathodic protection systems.

iii. Approved mitigation methods shall be followed prior to subsequent testing cycles.

c. Second and Subsequent Testing Cycles:

1) Time between testing cycles shall be 30- to 60-days.

2) Cathodic protection system shall not be adjusted between testing cycles.

3) Repeat testing required after energizing system during first testing cycle.

4) If testing cycle data indicates that cathodic protection system requires adjustment to meet specifications requirements, adjust cathodic protection system and conduct subsequent testing cycles within 30- to 60-days window.

H. Submerged galvanic anode cathodic protection system:

1. Testing shall be conducted at least in 2 testing cycles:

a. First Testing Cycle:

1) Prior to energizing the system:

a) Automatic anode current controller integrity:

i. Determine voltage difference between structure cables.

b) Measure potential difference between permanent copper/copper sulfate reference electrodes and portable copper/copper sulfate reference electrode:

i. Potential: 0.00 plus or minus 5 mV.

c) Measure potential difference between permanent copper/copper sulfate reference electrodes in each tank:

i. Potential: 0.00 plus or minus 5 mV.

d) Measure static structure-to-water potentials with each permanent reference electrode.

2) After energizing the system:

3) Determination of protective (uncorrected) and polarized structure-to-water potentials in accordance with capacity requirements of this Section:

a) Measure potentials with each permanent reference electrode.

4) Adjust auto-potential controller if necessary.

b. Second and Subsequent Testing Cycles:

1) Time between testing cycles shall be 30- to 60-days.

2) Cathodic protection system shall not be adjusted between testing cycles.

3) Repeat testing required after energizing the system during the first testing cycle.

4) If testing cycle data indicates cathodic protection system requires adjustment to meet requirements, adjust cathodic protection system and conduct subsequent testing cycles within 30- to 60-days.

I. Troubleshoot and correct any problems determined by COR.

J. Submit final data after last testing cycle when performance criteria have been met and no further adjustments are needed.

K. After reviewing submittal, Government may require additional testing and re-submittal to determine if corrosion monitoring system conforms to specification requirements.

END OF SECTION

SECTION 26 42 11
BURIED GALVANIC ANODE CATHODIC PROTECTION

PART 1 GENERAL

1.01 MEASUREMENT AND PAYMENT

A. Cost:

1. Include in lump sum price offered in the Price Schedule for Corrosion Systems.

1.02 REFERENCE STANDARDS

A. In accordance with Section 26 42 00 – Cathodic Protection Systems.

1.03 DEFINITIONS

A. In accordance with Section 26 42 00 – Cathodic Protection Systems.

1.04 QUALIFICATIONS

A. In accordance with Section 26 42 00 – Cathodic Protection Systems.

1.05 SYSTEM DESCRIPTION

A. Provide Galvanic Anode Cathodic Protection Systems for the following features:

1. Booster Station site - yard pipe and associated metalwork.

1.06 QUALITY

A. In accordance with Section 26 42 00 – Cathodic Protection Systems.

1.07 SYSTEM PERFORMANCE

A. In accordance with Section 26 42 00 – Cathodic Protection Systems.

1.08 SUBMITTALS

A. Submit in accordance with Section 01 33 00 – Submittals.

B. RSN 26 42 11-1, Certification and Data:

1. Copy of Cathodic Protection Technologists' AMPP certification for personnel performing or directing installation and testing of cathodic protection systems.
2. Manufacturer's data if applicable, including catalog data sheets when available, including but not limited to:
    a. Galvanic anodes.

b. Test station.

c. Metallurgical bonding system.

d. Dielectric coating system for bonds.

e. Cables.

f. Cable identification labeling system.

g. Shunts.

h. Variable Resistors (if necessary).

3. Preliminary drawings, including:

a. Proposed location of test stations.

b. Proposed location of anode beds.

C. RSN 26 42 11-2, Final Data:

1. Information and data including:

a. Include data for all continuity and cathodic protection required for the project.

b. Test equipment and methods utilized.

c. Placement of reference electrode during each test, if required.

d. Tests results.

e. Photos.

2. As-built and Final Drawings:

a. Provide as-built and final installation drawings in accordance with Section 01 78 30 – Project Record Documents:

1) Final anode locations and connection details.

2) Locations of anodes and/or anode beds.

3) Electrical continuity bonds and isolation details.

4) Locations of test stations and cable runs:

a) Locations shall be given using unique identifier and GPS coordinates.

b) Location shall include type of test station per Drawing(s) 1695-D-62391.

5) List of anode cable identifications in test station(s).

PART 2 PRODUCTS

2.01 CABLES

A. In accordance with Section 26 42 00 – Cathodic Protection Systems.

2.02 BONDS

A. In accordance with Section 26 42 00 – Cathodic Protection Systems.

2.03 DIELECTRIC COATING FOR BONDS

A. In accordance with Section 26 42 00 – Cathodic Protection Systems.

2.04 ELECTRICAL CONDUIT

A. In accordance with Section 26 42 00 – Cathodic Protection Systems.

2.05 GALVANIC ANODES

A. 20D2 or larger UltraMag High Potential Magnesium Anode manufactured by Farwest Corrosion Control Co., 480 Artesia Blvd., Gardena CA, 90248; or equal, with the following essential characteristics:

1. Twenty (20) pounds magnesium anode material per anode, minimum.
2. High potential magnesium anode material specifically designed for cathodic protection systems and intended environment.
3. Anode material meeting or exceeding requirements of ASTM B843 and having minimum potential of -1.700 volts referenced to copper/copper sulfate reference electrode (CSE).
4. Contains mild steel core extending essentially entire length of anode. Center mild steel core within anode material and exposed on one end of anode for factory made anode-to-cable connection.

B. Factory anode-to-cable connection, exposed mild steel core, and exposed copper cable potted in epoxy.

C. Silver-solder connection between anode cable and mild steel core.

D. Anode Cable: In accordance with cable requirements above.

2.06 SAND BACKFILL

A. In accordance with Section 26 42 00 – Cathodic Protection Systems.

2.07 TEST STATION ENCLOSURE

A. In accordance with Section 26 42 00 – Cathodic Protection Systems.

B. Refer to Drawing(s) 1695-D-62391 for details.

2.08 TEST STATION PIPE AND BOLLARDS

A. In accordance with Section 26 42 00 – Cathodic Protection Systems.

2.09 WARNING TAPE

A. In accordance with Section 26 42 00 – Cathodic Protection Systems.

PART 3 EXECUTION

3.01 INSTALLATION OF GALVANIC ANODE CATHODIC PROTECTION SYSTEMS

A. Installation details indicated on Drawing(s) 1695-D-62391.

B. Installation and testing shall be performed or directed by a Cathodic Protection Technologist certified by AMPP.

C. Dielectric materials that might cause shielding of cathodic protection current (e.g., plastic debris) shall not be left in excavation with structure.

D. Cable:

1. In accordance with Section 26 42 00 – Cathodic Protection Systems, Article 3.01 E.

E. Structure Cables:

1. In accordance with Section 26 42 00 – Cathodic Protection Systems, Article 3.01 F.

F. Electrical Continuity Joint (Jumper) Bonds:

1. In accordance with Section 26 42 00 – Cathodic Protection Systems, Article 3.01 G.
2. Bond all metalwork within 100-feet.

G. Test Stations:

1. In accordance with Section 26 42 00 – Cathodic Protection Systems, Article 3.01 I.

H. Galvanic Anodes:

1. Install horizontally or vertically as follows and as directed by COR:
   a. Location:

1) Metallic pipe segments and metallic fittings or structures on non-metallic pipeline.

2) Minimum 25-feet from nearest part of structures to be protected.

3) Minimum 10-feet from one another.

4) Minimum one anode length (~6 feet) from non-metallic piping.

b. Install a minimum of one anode for each group of metallic fittings, pipe segments, and structures bonded together.

c. Depth:

1) At or below invert of structure.

2. Remove outer water-resistant covering on pre-packaged anodes before installation, taking care not to damage wettable covering containing backfill and magnesium.

3. At no time shall anodes be supported by their cables.

4. Do not wet pre-packaged anodes until in the ground, surrounded with compacted earth, and covered by at least 1-foot of compacted backfill.

5. Do not connect anodes to structures at test stations, energizing systems only at time of testing.

6. Connect individual galvanic anodes to structures through individual calibrated 0.01-ohm shunts within test station for current measurement.

a. Where multiple anodes are involved, a calibrated shunt shall be included for each individual anode.

7. Connect individual anodes to structure through variable resistors within test station to allow for equalizing current from individual anodes (if necessary).

3.02 FIELD TESTING

A. In accordance with Section 26 42 00 – Cathodic Protection Systems.

END OF SECTION

This page intentionally left blank.

SECTION 26 42 15
GALVANIC ANODE CATHODIC PROTECTION FOR WELDED STEEL TANKS

PART 1 GENERAL

1.01 MEASUREMENT AND PAYMENT

A. Cost:

1. Include in lump sum price offered in the Price Schedule for Corrosion Systems.

1.02 REFERENCE STANDARDS

A. In accordance with Section 26 42 00 – Cathodic Protection Systems.

1.03 DEFINITIONS

A. In accordance with Section 26 42 00 – Cathodic Protection Systems.

1.04 QUALIFICATIONS

A. In accordance with Section 26 42 00 – Cathodic Protection Systems.

1.05 SYSTEM DESCRIPTION

A. Provide Galvanic Anode Cathodic Protection Systems for the following features:

1. Welded tank interior:

a. Regulating Tank No. 3 site - tank B.

1.06 QUALITY

A. In accordance with Section 26 42 00 – Cathodic Protection Systems.

1.07 SYSTEM PERFORMANCE

A. In accordance with Section 26 42 00 – Cathodic Protection Systems.

1.08 SUBMITTALS

A. In accordance with Section 26 42 00 – Cathodic Protection Systems.

B. Submit in accordance with Section 01 33 00 – Submittals.

C. RSN 26 42 15-1, Certification and Data:

1. Copy of Cathodic Protection Technologists' AMPP certification for personnel performing or directing installation and testing of cathodic protection systems.

2. Manufacturer's data including catalog data sheets when available, including but not limited to:
    a. Galvanic anodes.
    b. Dielectric coating at anode bonding points.
    c. Metallurgical bonding system.
    d. Mechanical bonding system (splice kits).
    e. Cables.
    f. Cable identification labeling system.
    g. Automatic anode current controller.
        1) Permanent reference electrodes (Copper/Copper-Sulfate).
    h. Conduit.
3. Preliminary drawings, including:
    a. Proposed location of anodes, permanent reference electrodes, automatic anode current controller, and conduit.
    b. Proposed anode and automatic anode current controller installation details.
    c. Proposed method for attachment of permanent reference electrodes to interior tank wall and floor.

D. RSN 26 42 15-2, Final Data:
1. Information and data including:
    a. Include data for all continuity and cathodic protection required for the project.
    b. Test equipment and methods utilized.
    c. Placement of reference electrode during each test, if required.
    d. Tests results.
    e. Photos on cathodic protection system installation.
2. As-built and Final Drawings:
    a. Provide as-built and final installation drawings in accordance with Section 01 78 30 – Project Record Documents:
        1) Final anode locations and connection details.
        2) Locations of controller and cable runs:
            a) Locations shall be given using unique identifier and GPS coordinates.
            b) Location shall include type of controller and conduit per Drawing(s) 1695-D-62393.

3) List of anode cable identifications in controller, as applicable.

PART 2 PRODUCTS

2.01 CABLES

A. In accordance with Section 26 42 00 – Cathodic Protection Systems.

2.02 BONDS

A. In accordance with Section 26 42 00 – Cathodic Protection Systems.

2.03 SPLICE KITS

A. In accordance with Section 26 42 00 – Cathodic Protection Systems

2.04 DIELECTRIC COATING FOR BONDS

A. In accordance with Section 26 42 00 – Cathodic Protection Systems.

2.05 ELECTRICAL CONDUIT

A. Galvanized conduit for anodes and permanent reference electrode cables.

1. Sized for number and diameter of cables.

2.06 GALVANIC ANODES

A. Extruded rod UltraMag high potential magnesium anode, manufactured by Farwest Corrosion Control Company, 12029 Regentview Avenue, Downey, CA 90241; or equal, with the following essential characteristics:

1. High potential magnesium anode material specifically designed for cathodic protection systems and intended environment.
2. Magnesium rod anode material length and diameter specified for above-ground welded storage tanks on Drawing 1695-D-62393.
3. Anode material meeting or exceeding requirements of ASTM B843 and having minimum potential of -1.7 volts referenced to copper/copper sulfate reference electrode (CSE).
4. Contains mild steel core extending essentially entire length of anode. Center mild steel core within anode material and exposed on one end of anode for factory made anode-to-cable connection.

B. Factory anode-to-cable connection, exposed mild steel core, and exposed copper cable potted in epoxy.

C. Silver-solder connection between anode cable and mild steel core.

D. Anode Cable: In accordance with cable requirements above.

2.07 AUTOMATIC ANODE CURRENT CONTROLLER

A. Magnesium anode current controller (MACC3), manufactured by Cathtect USA, 1627 US Hwy 1, Suite 213, Sebastian, FL 32958; or equal, with the following essential characteristics:

1. Automatic potential control set range, adjustable from -0.7 to -1.5 V.
2. IR-Free cathodic protection readings.
3. No external AC power required:
   a. Uses sacrificial anodes for power,
   b. Solar generated power, or
   c. Battery pack with minimum 10-year life.
4. Non-metallic enclosure, NEMA 3R, NEMA 4X, or equal.
5. Minimum of 3 permanent reference electrodes

B. Copper/Copper Sulfate permanent reference electrode for use in freshwater service: STAPERM Model CU-2-FW, manufactured by GMC Electrical, Incorporated, 280 N. Smith Ave, Corona CA 92880; or equal, having the following characteristics:

1. Rugged 1-inch plastic housing.
2. ±5 mV with 3.0 micro-amp load.
3. Minimum 20-year design life:
4. Electrode cable in accordance with cable requirements of Specification Section 26 42 00 Article 2.01 and Drawing 1695-D-62932.
   a. Suitable length to extend from reference electrode location to junction box without splicing.

PART 3 EXECUTION

3.01 INSTALLATION OF GALVANIC ANODE CATHODIC PROTECTION SYSTEMS FOR TANKS

A. Installation details indicated on Drawing(s) 1695-D-62392 and 1695-D-62393.

B. Installation and testing shall be performed or directed by a Cathodic Protection Technologist certified by AMPP.

C. Above-Ground Storage Tank:

1. Install anodes vertically in above-ground storage tanks as described in Drawing 1695-D-62393.

2. Anode Cables:
   a. Inspect for insulation defects prior to after installation:
      1) Cables: Replaced if insulation is damaged.
      2) COR shall approve and inspect necessary splices prior to installation.
   b. Install without kinks or stresses.
   c. Run anode cables out single port in roof of tank and down outside of tank to automatic anode current controller through galvanized conduit.
   d. Protect cables inside tank from damage and stresses.
   e. Connect anode cable(s) to controller terminals in accordance with manufacturer's instructions.
   f. Identify origin of cables terminating in an enclosure:
      1) Cable identification as to the distinct anode in accordance with Drawing 1695-D-62392.
      2) Printed letters on shrinkable label attached to cables clearly visible within enclosure.
      3) Encase printed labels in clear heat shrink tubing.
      4) Do not support array anodes by their cables. Use coated stainless steel wire ropes as described in drawings.
3. Do not connect anodes to structures at automatic anode current controller, energizing systems only at time of testing.
4. Structure Cables:
   a. Two cables from tank near the automatic anode current controller.
   b. Connect cables to structures by exothermic metallurgical bond as shown in Drawing 1695-D-62392 exothermic metallurgical bond in accordance with bonding supply manufacturer's instructions.
      1) Bonds shall not damage tank linings.
         a) Repair dielectric coatings/linings in accordance with Section 09 96 20 – Coatings.
5. Permanent Copper/Copper Sulfate Reference Electrodes:
   a. Install four permanent reference electrodes in tank:
      1) Install three reference electrodes on tank wall placed at three different elevations:
      2) Install one reference electrodes on tank floor near the center of the tank:
   b. Protect reference electrode cables from damage inside tanks.

c. Run reference electrode cables out single port in roof of tank and down outside of tank to automatic anode current controller through galvanized conduit.

6. Automatic Anode Current Controller:

a. Location:

1) Mounted on steel post 1-foot from tank ring wall.

2) Minimum 4-feet from ground level.

D. Placement of Anodes:

1. Provide adequate distribution of cathodic protection current, as indicated on Drawing 1695-D-62393.

E. Installation and Testing:

1. Performed or directed by Cathodic Protection Technologist certified by AMPP.

F. Electrically isolate all structures to be cathodically protected from other extraneous metal (e.g., rebar in concrete).

3.02 WELDING

A. Weld anode anchors to tank wall as shown in Drawing 1695-D-62393 and in accordance with Section 26 42 00 – Cathodic Protection Systems and AWS welding code.

3.03 FIELD TESTING

A. In accordance with Section 26 42 00 – Cathodic Protection Systems.

END OF SECTION

SECTION 28 10 01
SECURITY AND SURVEILLANCE SYSTEM

PART 1 GENERAL

1.01 MEASUREMENT AND PAYMENT

A. Security System:

1. Payment: Lump sum price offered in the Price Schedule.

1.02 REFERENCE STANDARDS

A. Architectural Barriers Act (ABA)

1.	ABAAS (2015)	Architectural Barriers Act Accessibility Standards

B. Institute of Electrical and Electronics Engineers (IEEE)

1.	IEEE 802.3-2018	Standard for Ethernet
2.	IEEE 802.3af-2003	Standard for Information Technology - Telecommunications and Information Exchange Between Systems – Local and Metropolitan Area Networks- Specific Requirements – Part 3: Carrier Sense Multiple Access with Collision Detection (CSMA/CD) Access Method and Physical Layer Specifications – Data Terminal Equipment (DTE) Power Via Media Dependent Interface (MDI)
3.	IEEE 802.3at-2009	Standard for Information Technology - Local and Metropolitan Area Networks - Specific Requirements - Part 3: CSMA/CD Access Method and Physical Layer Specifications Amendment 3: Data Terminal Equipment (DTE) Power via Media Dependent Interface (MDI) Enhancements

C. National Electrical Manufacturer's Association (NEMA)

1.	NEMA 250-2020	Enclosures for Electrical Equipment (1,000 Volts Maximum)

D. National Fire Protection Association, Inc. (NFPA)

1.	NFPA 70-2023	National Electrical Code (NEC)

E. National Institute of Standards and Technology (NIST)

1. FIPS 201-3-2022 Personal Identity Verification (PIV) of Federal Employees and Contractors

1.03 SUBMITTALS

A. Submit in accordance with Sections 01 33 00 – Submittals, 01 33 26 – Electrical Drawings and Data, and 01 78 30 – Project Record Documents.

B. RSN 28 10 01-1, Approval Drawings and Data:

1. Data:
   a. Manufacturer's product data.
      1) Include information on software packages.
   b. Electrical characteristics.
   c. Bill of materials.
2. Drawings:
   a. Plan drawings showing locations of all cameras, balanced magnetic contacts/switches, and other security system devices and equipment.
   b. Detailed installation drawings and instructions of system being provided.
   c. Device, conduit, and circuit plan layouts.
   d. Network diagram.
   e. Schematic and wiring diagrams.
3. Installation requirements.

C. RSN 28 10 01-2, Extra Materials:

1. Submit bill of materials and manufacturer's product data for all provided extra materials and spare parts required by this specification.
2. Include description of any software or licenses to be included.

D. RSN 28 10 01-3, Final Software:

1. Provide documentation of supplied software and firmware with identified versions, revisions, and patch levels.
2. Include all software required under 'Extra Materials', as well as any other backup software or programming required in the Specification.
3. Provide a list of all passwords and usernames currently in use, for the software or components, and identify what they are associated with and what levels of permission they provide.

E. RSN 28 10 01-4, Final Drawings and Data:

1. Update drawings to include 'as-built' changes and show final installation.
2. Include documentation published by vendors in support of vendor supplied hardware/software incorporated into system, including:
    a. Detailed level of maintenance.
    b. Theory of operation.
    c. Illustrated parts.
    d. Installation.
    e. Operating and test instructions.
    f. Reconfiguration of default settings.
    g. Software vendor manuals, including set-up and use of software programs with sufficient information to allow user programming and maintenance of the system.
3. List of recommended spare parts and components.
4. Document component set-up and programming used for this installation.
5. Final bill of materials.

1.04 PROJECT CONDITIONS

A. See Section 01 14 10 – Use of Site, Paragraph 1.04.

1.05 EXTRA MATERIALS

A. Spare parts:
1. Two magnetic contacts of each model used.
2. One camera of each type used.
3. Furnish minimum 20 percent spare parts:
    a. Fuses.
    b. Transient protection modules.
4. One (1) spare power supply of each size and type used.
5. Spare parts shall be packed in containers suitable for long term storage.
6. Spare parts shall bear labels clearly designating the contents of equipment or components for which they are intended.

B. Provide additional equipment not specified in these specifications but necessary to make the system complete and operational.

C. Furnish two copies of system software, to include:
1. Software required to re-install software required for the system to function properly.

2. Copies supplied shall contain the final version of all furnished software.
3. Operating system software.
4. Database and application software, including all software required for setup, maintenance and operation of the Video Surveillance System and Access Control System.
5. Data archiving/backup and retrieval software.
6. Licensing in the Government's name for all software.
7. Provide a complete restorable external backup of every software component. Archive point shall be latest software versions prior to Contractor demobilization and include punch list changes made after Commissioning.

1.06 SYSTEM DESCRIPTION

A. Provide additional equipment not specified in these specifications but necessary to make system complete and operational.

B. Provide software essential for system to meet functional requirements.

C. Power:

1. Provide power distribution system to security and surveillance system components, including protection, to support full operation of the system.
2. Video Surveillance System and Security Workstation
   a. Supply Video Surveillance System and the Security Workstation from the Uninterruptible Power Supply (UPS) specified in this Section.

D. Power feeds shall utilize the following voltages: 120 V.

E. Provide all fuses, circuit breakers, power supplies, transformers etc., required to supply and transform power feeds at desired voltage.

F. Design video surveillance system to accommodate the following:

1. IP based digital video surveillance system.
2. Allows simultaneous live viewing and recording.
3. Allows full-resolution or low-resolution video, based on bandwidth limitations.
4. Pan/Tilt/Zoom (PTZ) camera control, with full remote control via IP network. Supports continuous scan of project site.
5. Digital video recorder:
   a. Automatic control and recording of each camera in the system.
   b. Manual control of each camera in the system via keyboard, mouse, and monitor.

6. Cameras:
   a. Program limit stops to limit pan range of camera to wall adjacent to camera.
   b. Prefabricated pump station yard:
      1) Allow coverage of entire pump station yard from camera(s) mounted on the exterior of the building or in the facility yard.
      2) Camera(s) shall provide continuous scan of entire facility yard.
7. Placement:
   a. Intrusion detection:
      1) Place camera so intruder represents at least 10 percent of the image height (no less than 70-pixels) at normal camera image resolution.
      2) Place cameras to provide intrusion detection, unless larger images are required.
   b. Locations:
      1) Applies to all Contractor-installed site locations.
      2) Exterior Site:
         a) PTZ cameras.
         b) Outdoor equipment and site exterior.

G. Access Control System:
1. Provide balanced magnetic contacts to monitor positions of all doors and vault hatches.
   a. Balanced magnetic contacts shall indicate which doors and vaults are opened.
   b. Provide feedback from supplied balanced magnetic contacts as inputs to security system.
2. IP/network based integrated system.
3. Supply power for access control components from facility AC power system. Access control components shall not rely solely on local battery power supply.
4. Card readers?
5. Door/Gate/Hatch position monitoring:
   a. Utilize balanced magnetic contacts to provide door, security panel, and vault hatch monitoring unless the installation arrangement requires alternative method to monitor position. Video analyzation alone is not sufficient.
   b. Utilize wide-gap, balanced magnetic contacts on doors.
   c. Provides specific indication of which entry point opened.

d. Minimum locations:

1) Doors or entry points for entering a building.

2) Access hatches for vaults.

6. Alerts:

a. Provide alarms from security system to security display during business hours.

b. Forward security alarms from all magnetic contactors to contractor-provided PLC at prefabricated pumping station.

PART 2 PRODUCTS

2.01 VIDEO SURVEILLANCE SYSTEM

A. Video Management Software: Model XProtect Express+ manufactured by Milestone Systems, Inc., www.milestonesys.com, with the following essential characteristics:

B. Video Management Server

1. Type: Rack-mounted for placement in a security system enclosure or server rack.

2. Storage requirements:

a. 120 days at 3 frames per second (minimum) if no motion and 15 frames per second (minimum) with motion.

b. Supports downloading video onto USB device or solid-state drive for long term storage

3. Inputs and Ports:

a. 100/1000BaseT Ethernet or faster.

b. Can accommodate a minimum of 5 video inputs from the cameras.

4. Operating System: Microsoft Operating System.

5. Other Software: As required.

C. Pan/Tilt/Zoom (PTZ) Camera Control from the Security Workstation, with full remote control via TCP/IP network.

2.02 SECURITY WORKSTATION

A. Provide a minimum of one Security Workstation located in Prefabricated Pump Station.

B. Allows the user to perform the following minimum functions:

1. Operate and manage the Video Surveillance System and Access Control System for the facility.

2. Control cameras.

3. Access and monitor video footage from the Video Surveillance System.

C. Each Engineering Workstation shall include:

1. Mouse and full function QWERTY keyboard.
2. Minimum of one 24-inch (minimum) monitor:
   a. Touchscreen.
   b. Flat panel.
   c. LED.
   d. Resolution: 3840 x 2160 pixels, 4K UHD, minimum.
   e. Usable in all lighting conditions.
   f. Response rate: Not more than 5 ms.
3. Number of Processors/Core: six, minimum.
4. RAM: 32 GB minimum.
5. Hard Drive: 500 GB solid state drive, minimum.
6. Processor: 2.4 GHz, minimum.
7. Hot plug redundant power supply.
8. UEFI firmware and configured to run in UEFI mode.
9. Minimum ports:
   a. 4 USB Type-A ports.
   b. 2 USB Type-C ports.
   c. Serial port
   d. Keyboard port
   e. Mouse port.
   f. 2 RJ45 network ports

D. Display the Government's System Use Notification banner.

E. Operating System: Microsoft Operating System.

F. Other Software: As required.

2.03 PAN/TILT/ZOOM (PTZ) DOME CAMERA

A. Model Q6135-LE manufactured by Axis Communications, Inc., www.axis.com, with the following salient characteristics:

1. Construction:
   a. Type: Pendant.

b. Back box: Aluminum.

2. Auto-focus.

3. Zoom: 18x optical, minimum.

4. Resolution: 1080p minimum at 60 frames per second.

5. Power over Ethernet (PoE) capable.

6. Outdoor camera to include the following:

a. Enclosure: NEMA 250 4X.

b. Dome: Clear polycarbonate.

c. Day/Night mode.

d. Operating temperature: -40 to 50-degrees C.

e. High Powered PoE injector for heater element.

f. Corner mounting for 270-degree view around building.

2.04 INDUSTRIAL NETWORK SWITCH

A. Rack-mounted, industrial, managed Ethernet switch.

B. NDAA Compliant.

C. Physical Features:

1. Copper ports:

a. Ten 10/100/1000BaseTX, RJ-45, PoE, minimum.

2. Up to 30 watts per PoE port.

3. Status indicators on each port.

4. Power: 24 VDC inputs.

5. Enclosure: Metal case.

D. Network Features:

1. IEEE 802.3 compliance.

2. IEEE 802.3af/at compliance.

3. Full/Half Duplex operation on all ports.

4. 1000-Mbps throughput, minimum.

2.05 LOCK MORTISE

A. Heavy duty industrial design.

2.06 BALANCED MAGNETIC CONTACT

A. Separate magnet housing and contact.

B. All metal housing.

C. Wide-gap operation: 3 inches, minimum.

2.07 SURGE SUPPRESSION DEVICE

A. Type: Designed to protect outdoor cameras.

2.08 ENCLOSURES

A. Provide:

1. NEMA 250 Type 12 enclosures for indoor installations. Identify and select equipment materials and enclosure types for location installed and probability of exposure to water and hazardous or corrosive environments.
2. Thermostatically controlled cabinet space heaters to control condensation in all cabinets not in a temperature-controlled environment, or subject to condensation.

B. Enclosure's design shall allow free and easy access to internal components.

C. Enclosures shall maintain temperature of equipment within manufacturer recommended range.

D. Doors: Lockable.

E. Finishes: Manufacturer's standard finishes.

F. Nameplates:

1. As indicated on Standard Drawing 40-D-6234.
2. Provide nameplates for following:
   a. Overall enclosure assembly:
      1) Provide nameplate with equipment.

2.09 NETWORK RACKS

A. Network Racks, include:

1. 19-inch Electronic Industries Association (EIA) rails.
2. Depth, at a minimum, to accommodate deepest equipment to be mounted in rack with additional space to accommodate connections to rear of equipment.
3. 25 percent spare space.
4. Perforated lockable doors, front, and rear.

5. Power outlets.
6. Cable management system.
7. Leveling feet and bolt down brackets.

B. Design shall allow free and easy access to internal components.

C. Design racks to maintain components mounted in the rack within manufacturer's specified operating temperature range.

D. Manufacturer's standard anti-corrosion coating.

2.10 UNINTERRUPTIBLE POWER SUPPLY

A. Sizing: Rated to provide backup power for 4 hours with full electrical load.

B. AC Input:
1. Voltage: 120 VAC, 60 Hz.
2. Input voltage range: ±15 percent of rated voltage.

C. AC Output:
1. Voltage: 120 VAC, 60 Hz.
2. Output Voltage Regulation:
   a. ±1 percent for symmetrical load.
   b. ±3 percent for asymmetrical load.

D. Efficiency: 96 percent, minimum, at 100 percent rated load.

E. Overload Capacity:
1. 150 percent for 1 minute, minimum.
2. 110 percent continuous, minimum.

F. Load Power Factor:
1. Supports a minimum power factor range of 0.7 pf leading to 0.7 pf lagging.

G. Controls:
1. Includes digital control panel for the UPS with the following additional features.
   a. Alarms:
      1) Low Input Voltage.
      2) Low Battery Voltage.
      3) On Battery.
      4) UPS Failure.

b. Communications:

1) Supports at least one of the following communication protocols:

a) Modbus RTU.

b) Modbus TCP/IP.

c) Ethernet/IP.

PART 3 EXECUTION

3.01 INSTALLATION

A. In accordance with manufacturer's recommendations.

B. All connections shall be made to place security and surveillance system into operation.

C. Provide cable and raceways required to connect Contractor supplied equipment.

1. Provide fully functional system which meets requirements in these specifications.
2. Cable and raceways shall be provided in accordance with Sections 26 05 10 – Conductors and Cables and Section 26 05 33 – Raceways and Boxes.

D. Make grounding and bonding connections in accordance with Section 26 05 26 – Grounding and Bonding and NFPA 70.

E. Raceway and Cable Tray:

1. All cable shall be installed in building walls, raceway, or cable tray.
2. Enclose security and surveillance system cables within 8-feet vertically from building floors and walkways or otherwise accessible, inside tamper-resistant conduits and/or within walls.
3. Security and surveillance system cables above 8-feet vertically from building floors and walkways may be placed in cable tray.

F. Mount exterior security keypad/card reader within easy access to entry doors.

G. Provide an ABAAS compliant system with ABAAS compliant placement of card readers and other Access Control System components.

H. Mount exterior security cameras on elevated standoffs on corners of structures at diagonally opposite corners to get optical coverage of all sides of the structure.

I. Place security monitor in prefabricated pump station.

J. Security and surveillance system networks must be separate from control network. Do not connect security and surveillance system networks into or through routable Control System network switches.

3.02 CONTRACTOR FIELD QUALITY TESTING

A. Government will witness test. Notify COR in writing at 14-calendar-days prior to beginning of Security and Surveillance system testing.

B. Record following test data on test report for each component tested:

1. Date of test.
2. Name or names of Contractor's personnel who performed test.
3. Name of Government inspector who witnessed test.
4. Component identification.
5. Results of each test, including specific values measured and pass/fail indication.

C. Perform field wiring checkout and test in accordance with Section 26 05 90 – Wiring Checkout and Tests.

D. Purpose of test is to demonstrate functionality, performance and stability of hardware and software.

E. Test shall verify that all hardware and software meet requirements of specifications and drawings.

3.03 TRAINING

A. In accordance with Section 01 79 20 – Training.

B. Provide training for:

1. Video Surveillance System Maintenance:
   a. Training provided on minimum following topics:
      1) Any supplied hardware.
      2) Any supplied software packages.
   b. Intended Audience:
      1) Electricians and IT staff.
      2) Engineers.
      3) Electronic technicians.
      4) Facility staff.
   c. Location: On-Site or as accepted by COR.
   d. Duration: Minimum 2 hours.
   e. Class presented prior to commissioning of the Security and Surveillance System.

1) Occurs no more than 3 months prior to commissioning of the Security and Surveillance System.

2) Coordinate class schedule with the COR.

f. Supply a complete set of training material, bound and in electronic form, for each attendee.

2. Video Surveillance System Basic Operation:

a. Training provided on minimum following topics:

1) Control and Modifications to the Access Control System, including:

a) Responding to system alarms.

b) Controlling cameras.

c) Replaying stored video.

d) Downloading user selected videos onto storage mediums.

e) Performing ongoing and daily basic system operation and control functions.

2) Any supplied software packages.

b. Intended Audience:

1) Operators.

2) Facility staff.

c. Location: On-Site or as accepted by COR.

d. Duration: Minimum 1 hour.

e. Class presented after commissioning of the Security and Surveillance System.

1) Coordinate class schedule with the COR.

f. Supply a complete set of training material, bound and in electronic form, for each attendee.

C. Resulting Capabilities:

1. Each audience category can perform their intended function on the completed system.

2. Operators can operate and run the security and surveillance system, including controlling the video surveillance system and responding to alarm conditions.

3. Engineers and electro-mechanical technicians can modify and maintain the system.

END OF SECTION

This page intentionally left blank.

SECTION 31 02 10
WATER FOR DUST ABATEMENT

PART 1 GENERAL

1.01 MEASUREMENT AND PAYMENT

A. Water for Dust Abatement:

1. Measurement: Volume of water applied for dust abatement as directed by COR:
   a. Only water used for dust abatement as directed by COR will be included.
   b. Quantity will be measured by calibrated water meter approved by COR.
2. Payment: M (1,000) gallons prices offered in Price Schedule.

1.02 SUBMITTALS

A. Submit in accordance with Section 01 33 00 – Submittals.

B. RSN 31 02 10-1, Meter Calibration.

PART 2 PRODUCTS

Not Used

PART 3 EXECUTION

3.01 APPLYING WATER FOR DUST ABATEMENT

A. Provide sealed calibrated water meter for use in measuring water usage.

B. Provide water in accordance with Section 01 51 00 – Temporary Utilities.

C. Provide means of conveying water to point of use and applying water.

D. Install water meter at source.

E. Use pressure spray or distributor bar to apply water evenly.

F. Do not use water for dust abatement on temporary equipment roads, competed backfill areas, and other construction activities unless directed by COR.

G. Apply water for dust abatement as directed by COR.

END OF SECTION

This page intentionally left blank.

SECTION 31 02 30
DUST PALLIATIVE

PART 1 GENERAL

1.01 MEASUREMENT AND PAYMENT

A. Dust Palliative:

1. Measurement: Area covered as approved by COR:

   a. Only palliative applied in areas approved by COR will be included.

2. Payment: Acre price offered in the Price Schedule.

1.02 SUBMITTALS

A. Submit in accordance with Section 01 33 00 – Submittals.

B. RSN 31 02 30-1, Proposed Application Area for Dust Palliative:

1. Include dust palliative composition, equipment and application.
2. Certification that dust palliative does not inhibit revegetation.

PART 2 PRODUCTS

2.01 DUST PALLITIVE

A. Dirtglue, as manufactured by Dirtglue Enterprises, www.dirtglue.com; or equal, with the following essential characteristics:

1. Biodegradable.
2. Water based.
3. Will not inhibit revegetation.

2.02 WATER

A. Required for mixing and application.

PART 3 EXECUTION

3.01 PREPARATION

A. Surface Preparation:

1. Shape and grade surface.

2. Loosen surface with rock rake or blade grader to depth of 1- to 2-inches.
3. Water loose surface so it is visibly moist.
4. In areas without surfacing materials: Do not disturb subgrade, moisten only.

3.02 APPLICATION

A. Apply in areas approved by COR immediately after clearing, grubbing and topsoil stockpiling have been completed:

1. Apply palliative to cleared and grubbed areas not disturbed by excavation, stockpiled topsoil materials, roads, access ramps.
2. Do not apply to areas to be excavated unless directed by COR.
3. After backfill and top soil has been replaced.
4. Other areas as directed by COR where application of water for dust abatement is ineffective as determined by COR.
5. Perform maintenance applications to control dust for duration of contract as recommended by manufacturer and as directed by COR.
6. Apply within 24-hours after completion of surface preparation.

B. Equipment: Designed for uniform application on variable widths at predetermined rates.

C. Location: Access road, stockpiles and ROW as directed by COR.

D. Area: Surface width as necessary with designated ROW.

E. Limitations:

1. Not during rain.
2. Not if rain is anticipated within 4 hours following treatment.
3. Not on frozen ground.

F. Application Rate:

1. Dust Palliative: As recommended by manufacturer.
2. If material runs off during application, make repeated passes at lesser rates.

G. Compaction:

1. By equipment travel.
2. Keep traffic off treated surface until dust palliative has penetrated and cured enough to prevent excessive pickup under traffic.

END OF SECTION

SECTION 31 11 00
CLEARING AND GRUBBING

PART 1 GENERAL

1.01 MEASUREMENT AND PAYMENT

A. Clearing and Grubbing:

1. Measurement: Area of site cleared and grubbed to paylines shown on drawings or to paylines determined by the COR.
2. Payment: Square yard price offered in the Price Schedule.
   a. Includes disposal of materials.

1.02 DEFINITIONS

A. Vegetation: Trees, shrubs, brush, stumps, exposed roots, down timber, branches, grass and weeds.

PART 2 PRODUCTS

Not Used

PART 3 EXECUTION

3.01 GENERAL

A. Obtain clearances and permits before clearing and grubbing.

B. Obtain COR approval before clearing and grubbing.

3.02 CLEARING

A. Clear only areas to be stripped of topsoil.

B. Clear rights-of-way to be occupied by permanent construction.

C. Clear adjacent to cut or fill sections to a minimum distance of 3 feet outside of slope lines.

D. Obtain COR approval before removing trees.

E. Where tree cutting is required remove vegetation, rubbish, and objectionable material as determined by COR:

1. Usable trees:
   a. Size: 3-inch diameter or larger.
   b. Remove, limb, and leave on roadside for local residents to collect and use as firewood.
2. Smaller woody plants and limbs:
   a. Size: 3-inch diameter or less.
   b. Chip and spread on ROW during revegetation process.

F. Clear areas in accordance with Sections 01 57 50 – Tree and Plant Protection and 01 57 60 – Protected Species.

3.03 DISPOSAL OF CLEARED MATERIAL

A. Dispose of material in accordance with Section 01 74 00 – Cleaning and Waste Management, or as directed by COR.

END OF SECTION

SECTION 31 14 10

TOPSOIL STRIPPING, STOCKPILING AND PLACEMENT

PART 1 GENERAL

1.01 MEASUREMENT AND PAYMENT

A. Stripping, Stockpiling, and Placement:

1. Measurement: Volume of material stripped to paylines shown on drawings or to paylines as directed by COR.
2. Payment: Cubic yard price offered in the Price Schedule:
   a. Includes:
      1) Stockpiling excavated material for compacted backfill.
      2) Disposal of unused or wasted materials.
   b. Does not include excavation quantities.
   c. Over-stripping performed beyond specified or directed paylines and will be at expense of Contractor.

PART 2 PRODUCTS

Not Used

PART 3 EXECUTION

3.01 GENERAL

A. Obtain clearances and permits before stripping topsoil.

B. Obtain COR approval before stripping or placing topsoil.

C. Strip all areas to be disturbed by construction activities to expose unknown cultural resources directly after mobilization. Refer to Section 01 57 90 – Preservation of Historical and Archeological Data if cultural resources are discovered.

3.02 STRIPPING

A. Remove topsoil only in areas to be disturbed by construction activities to a depth of 6 inches, and to additional depths where directed by COR:

1. If a true topsoil layer does not exist, consider top 6 inches of surface soils removed to be topsoil for purpose of this section.
2. If surface is rock, stripping is not required.

3.03 STOCKPILING

A. Transport and stockpile topsoil for future use, prior to placing, and store separately from subsurface materials to avoid mixing during construction and reclamation activities.

B. Do not compact, drive on, place equipment on, or otherwise disturb stockpiled topsoil.

C. Cover stockpile with non-permeable tarp or dust palliative as approved by COR.

D. Haul excess topsoil offsite in accordance with Section 31 23 39 – Disposal of Excavated Materials as approved by COR.

3.04 PLACEMENT

A. Remove trash, weeds, stones larger than 6 inches, and large pieces of vegetative materials.

B. Place topsoil in areas of earthen surface disturbed by construction.

C. Place topsoil to a minimum thickness of 6 inches.

D. Equipment travel over replaced topsoil is prohibited unless associated with reseeding/reclamation activities to avoid compaction and improve chances for successful reclamation unless otherwise authorized by COR.

END OF SECTION

SECTION 31 23 02
COMPACTING EARTH MATERIALS

PART 1 GENERAL

1.01 MEASUREMENT AND PAYMENT

A. Cost:

1. Include cost of compacting earth materials in prices offered in the Price Schedule for items of work where earth materials are required to be compacted:

   a. Includes:

      1) Furnishing water and moistening materials.

      2) Contractor Quality Testing.

1.02 REFERENCE STANDARDS

A. ASTM International (ASTM)

1.	ASTM D422-63(2007)e2	Particle-Size Analysis of Soils
2.	ASTM D653-21a	Terminology Relating to Soil, Rock, and Contained Fluids
3.	ASTM D698-12(2021)	Laboratory Compaction Characteristics of Soil Using Standard Effort (12,400 ft-lbf/ft3 (600 kN-m/m3))
4.	ASTM D1140-17	Amount of Material in Soils Finer than the No. 200 (75-µm) Sieve
5.	ASTM D1556-15e1	Density and Unit Weight of Soil in Place by the Sand-Cone Method
6.	ASTM D2216-19	Laboratory Determination of Water (Moisture) Content of Soil and Rock by Mass
7.	ASTM D2487-17e1	Classification of Soils for Engineering Purposes (Unified Soil Classification System)
8.	ASTM D2488-17e1	Description and Identification of Soils (Visual-Manual Procedure)
9.	ASTM D4318-17e1	Liquid Limit, Plastic Limit, and Plasticity Index of Soils
10.	ASTM D4546-21	One-Dimensional Swell or Collapse of Cohesive Soils

11.	ASTM D4564-93	Standard Test Method for Density of Soil in Place by the Sleeve Method
12.	ASTM D4647/D4647M-13	Identification and Classification of Dispersive Clay Soils by the Pinhole Test
13.	ASTM D4718-15	Correction of Unit Weight and Water Content for Soils Containing Oversize Particles
14.	ASTM D4914-16	Density of Soil and Rock in Place by the Sand Replacement Method in a Test Pit
15.	ASTM D5030-21	Density of Soil and Rock in Place by the Water Replacement Method in a Test Pit
16.	ASTM D5080-20	Rapid Determination of Percent Compaction
17.	ASTM D6572-13	Determining Dispersive Characteristics of Clayey Soils by the Crumb Test
18.	ASTM D6913-17	Particle-Size Distribution (Gradation) of Soils Using Sieve Analysis
19.	ASTM D6938-17ae1	In-Place Density and Water Content of Soil and Soil-Aggregate by Nuclear Methods (Shallow Depths)
20.	ASTM D7382-20	Determination of Maximum Dry Unit Weight and Water Content Range for Effective Compaction of Granular Soils Using a Vibrating Hammer
21.	ASTM D7928-21	Standard Test Method for Particle-Size Distribution (Gradation) of Fine-Grained Soils Using the Sedimentation (Hydrometer) Analysis

B. Bureau of Reclamation (Reclamation)

1. *Guidelines for Earthwork Construction Control Testing of Gravelly Soils*, Earth Sciences and Research Laboratory, Technical Service Center, Bureau of Reclamation, Denver, Colorado, September 2006.

1.03 DEFINITIONS

A. Use definitions from ASTM D653.

B. Control Fraction:

1. Portion of a soil sample consisting of particles smaller than a designated sieve size.
2. Used to compare in-place unit weight with standard laboratory unit weight.

3. Control sieve size depends on laboratory test used to determine laboratory maximum density.

C. C-Value: Ratio expressed as a percentage of (1) in-place unit weight at fill moisture content to (2) wet unit weight of laboratory-compacted specimen prepared at fill moisture content as determined by rapid method of construction control in accordance with ASTM D5080. C-Value is a comparison of compactive effort of field compaction equipment to standard laboratory compactive effort.

D. D-value: Ratio expressed as a percentage of (1) in-place wet unit weight at fill moisture content to (2) laboratory maximum wet unit weight as determined from compaction curve constructed at fill moisture content as determined by rapid method of construction control ASTM D5080. D-value is equivalent of percent compaction in accordance with ASTM D698.

E. Percent Compaction: Ratio expressed as a percentage of the field in-place dry unit weight to the laboratory maximum dry unit weight in accordance with ASTM D698 or D7382.

F. Special compaction: Compaction close to structures or in spaces not accessible by standard width mechanical rollers.

1.04 SUBMITTALS

A. Submit in accordance with Section 01 33 00 – Submittals.

B. RSN 31 23 02-1, Test Results:

1. Results of tests listed in Table 31 23 02A – Contractor Materials Testing Requirements and Frequency.
2. Include test date, time, location, and person performing tests.
3. Notify COR within 2-hours if testing does not meet specified requirements.

1.05 AMBIENT CONDITIONS

A. Do not place and compact soil under the following conditions:

1. Rain or seepage that creates puddles in clayey or silty materials.
2. Heat or wind that dries material below specified moisture conditions.
3. Ice, frost, or snow pockets that are visible in soil being placed or on working surface (underlying materials).

B. Ambient air temperature below freezing may make placement and compaction operations difficult:

1. Cease operations when placed materials are freezing or below freezing.

2. Obtain COR approval, before performing operations when ambient air temperatures are below freezing.
3. Minimize interruptions of operations.
4. Continuous operations may be required to eliminate freezing of materials.

PART 2 PRODUCTS

2.01 WATER

A. Required for soil mixing and moisture control.

B. Water requirements per Specification 01 51 00 – Temporary Utilities.

2.02 SOIL CLASSIFICATION

A. When required, classify earth materials using the Unified Soil Classification System (USCS) according to ASTM D2487:

1. Gradation tests for classification: ASTM D422, ASTM D6913 and or ASTM D1140.
2. Atterberg limits testing for classification: ASTM D4318.

2.03 SOIL TYPES

A. Clean Fill:

1. Any soil except soils with classifications of Peat (PT), Organic Silt and Organic Clay (OL and OH), Fat Clay (CH), or Elastic Silt (MH), per ASTM D2487.
2. Do not use soils that exhibit expansive or dispersive characteristics in accordance with ASTM D4546, ASTM D4647, or ASTM D6572.
3. Free of roots, stumps, limbs, vegetation, organic matter, and ice.
4. Does not contain construction debris, scrap materials, refuse, man-made wastes, or chemical or hydro-carbon contamination.

B. Do not use frozen soils.

C. Special Gradations and Plasticity: In some cases, such as compacted backfill under foundations, special gradations, plasticity, and/or swell characteristics may be required. These requirements are provided below.

2.04 DESIGNATION OF SOILS FOR COMPACTION

A. Requirements for lift thickness, method of compaction, and method of determining degree of compaction depends on whether soil is considered to be silty or clayey, cohesionless, or cohesionless containing some silt or clay.

B. Silty or Clayey Soils: Contains appreciable amounts of fines (more than 15 percent plastic fines or 30 percent non-plastic fines).

C. Cohesionless Soils:

1. Contains few fines (less than 5 percent fines).
2. Cohesionless free draining Material: Water does not pond on surface.
3. Cohesionless non free draining: Water does pond on surface.

D. Cohesionless Soils Containing Some Silt or Clay:

1. Contains some silt or clay (between 5 percent fines and 15 percent plastic fines or 30 percent non-plastic fines).
2. Cohesionless free draining Material: Water does not pond on surface.
3. Cohesionless non free draining: Water does not pond on surface.

2.05 MAXIMUM PARTICLE SIZE

A. Maximum particle size in soil for Compacted Backfill:

1. In applicable sections.
2. Otherwise, no particles larger than 3-inches.

PART 3 EXECUTION

3.01 SURFACE PREPARATION

A. Clear, grub, and strip surface area.

B. Prepare in-situ horizontal surface so first compacted lift is placed on a firm and stable base.

C. For tank and building with soil foundations:

1. Scarify, moisten, and proof roll with 10-ton vibratory steel drum. Or equivalent compaction equipment for fine grained soils until horizontal surface does not yield.
2. Over-excavated and replaced with compacted backfill areas that excessively yield (rut).
3. Use woven geotextile, geogrid, or similar product if a stable base does not develop.

D. Minimum number of passes as approved by OGR.

E. OGR will approve surface before the first lift is placed.

3.02 SOIL MOISTURE CONTENT

A. Moisten or aerate (dry) material, as necessary, to provide moisture content that will readily facilitate obtaining specified compaction. Add water to soil only in increments that will permit moisture content to be uniform and homogenous throughout each layer after mixing.

B. Silty or Clayey Soils and Cohesionless Soils Containing Some Silt or Clay:

1. Add no more than 2 percent water to fill by sprinkling just prior to compaction when fill is clayey and contains dry clods of clay:

   a. If clayey borrow soil is more than 2 percent below optimum moisture, pre-conditioning and curing may be required to obtain uniform and homogenous distribution of moisture in the clods.

   b. Use of disks, harrows, rakes, or other equipment may be required to blend moisture in borrow area.

2. Moisture content during compaction:

   a. Soils controlled by impact compaction:

      1) Within 1 percent dry to 3 percent wet of optimum moisture content determined in accordance with ASTM D698 for clay soils

      2) Within 2 percent (wet or dry) of optimum moisture content, for other soils.

   b. Soils controlled by vibrating hammer:

      1) Applicable only to granular soils for which consistent results are not obtained using ASTM D698.

      2) Within water content range for effective compaction as determined by ASTM D7382.

   c. Compare field compaction moisture content with moisture contents determined in accordance with:

      1) ASTM D2216, or

      2) ASTM D6938. Correct moisture from nuclear gage for gauge error for specific soils tested, moisture content of total material may require adjustment for control fraction (ASTM D4718).

C. Cohesionless Soils:

1. Add water during compaction, as necessary since these soils are free-draining.

3.03 PLACEMENT

A. Place soils to be compacted in horizontal layers.

B. If necessary, blend materials prior to placement so compacted backfill is homogenous and free from lenses, pockets, streaks, voids, laminations, or other imperfections.

3.04 COMPACTION

A. Compact material with the following methods and techniques appropriate to the type of soil.

B. Compacted Backfill Density:

1. Based on Percent Compaction of Maximum Dry Unit Weight using ASTM D698.
2. Minimum: 98 percent beneath structures, extending down and away from outside bottom edge of structure (foundation) at 1H:1V slope.
3. Minimum: 95 percent outside of structures and 1H:1V slope.
4. Pipe Embedment Minimum: 95 percent.
5. Wash Crossing and Erosion Control Backfill (above pipe) Minimum: 85 percent.

C. Silty or Clayey Material:

1. Compact with mechanical impact tampers, tamping rollers, vibrating pad foot rollers, rubber tire rollers, other suitable compaction equipment, or equipment travel:
   a. Uniformly distribute equipment passes.
   b. Compact in horizontal layers to compacted thickness of 6-inches or less.
2. Special compaction: Compact with walk-behind roller, handheld impact tampers, or small tamping equipment:
   a. Uniformly distribute effort.
   b. Compact in horizontal layers to compacted thickness of 4 inches.
   c. Required within 3 feet horizontally of:
      1) Structures.
      2) Pipe.
      3) Buried utilities.

D. Cohesionless Free-draining Material:

1. Compact with crawler-type tractors, vibrating drum rollers, surface plate vibrator, or similar equipment:
   a. Uniformly distribute equipment passes.
   b. Compact in horizontal layers to compacted thickness of 12-inches or less.
2. Special compaction: Compact with walk-behind vibrating roller, handheld impact tampers, vibrating plate tampers, or small tamping equipment:

a. Uniformly distribute effort.

b. Compact in horizontal layers to compacted thickness of 6 inches.

c. Required within 3-feet horizontally of:

1) Structures.

2) Pipe.

3) Buried utilities.

E. Cohesionless Soils Containing Some Silt or Clay:

1. Compact in accordance with either procedure above.

F. Adjustment:

1. For soils containing 5 to 30 percent oversized particles:

a. In-place unit weight of minus No. 4 size control fraction determined by screening gravel, washing, and determining mass and volume by assuming surface saturated dried moisture as outlined in ASTM D4718.

2. For soils containing more than 30 percent oversized particles:

a. Required D-ratio or Percent Compaction may be adjusted in accordance with appropriate curve on Figure 3 in Reclamation *Guidelines for Earthwork Construction Control Testing of Gravelly Soils*.

G. Demonstration:

1. Lift thicknesses may vary depending on equipment and methods. Before changing requirements in this Section, demonstrate that required density will be obtained.

3.05 MEASURE OF COMPACTION

A. Determine unit weight of in-place soils by:

1. Silty or Clayey Soils and Cohesionless Soils Containing Some Clay and Silt:

a. ASTM D1556, or

b. ASTM D4914, or

c. ASTM D5030, or

d. ASTM D6938.

2. Cohesionless Soils:

a. ASTM D4564, or

b. ASTM D6938.

B. Determine Percent Compaction by:

1. Silty or Clayey Soils:

a. Laboratory Compaction Test: Comparison of in-place density of minus No. 4 sieve size control fraction to laboratory maximum dry density as determined by ASTM D698, Procedure A.

b. Rapid Method: ASTM D5080.

2. Cohesionless soils: In-place dry unit weight of minus 2-inch control fraction compared to the maximum dry unit weight determined by ASTM D7382.

3. Cohesionless soils containing some silt or clay:

a. Use ASTM D698 except for soils for which consistent results are not obtained using ASTM D698. In this case use ASTM D7382.

b. Rapid Method: ASTM D5080.

4. Adjustment:

a. For soils containing 5 to 30 percent oversized particles:

1) In-place unit weight of minus No. 4 size control fraction determined by screening gravel, washing, and determining mass and volume by assuming surface saturated dried moisture as outlined in ASTM D4718.

b. For soils containing more than 30 percent oversized particles:

1) Required D-ratio or Percent Compaction may be adjusted in accordance with appropriate curve on Figure 3 in Reclamation *Guidelines for Earthwork Construction Control Testing of Gravelly Soils*.

3.06 CONTRACTOR FIELD QUALITY TESTING

A. Testing:

1. Independent testing laboratory shall perform sampling, testing, and reporting as required in Table 31 23 02A - Contractor Materials Testing Requirements and Frequency:

a. Independent testing laboratory shall meet requirements specified in Section 01 46 20 – Testing Agency Services.

2. Notify independent testing laboratory and Government 24-hours before compaction work begins and 24-hours before significant change in compaction operations (major change in equipment or procedure used).

3. Notify independent testing laboratory and Government immediately of equipment change due to breakdown, or re-deployment.

4. Testing Frequency:

a. At minimum, perform test at frequencies specified in Table 31 23 02A - Contractor Materials Testing Requirements and Frequency.

b. Greater frequency of testing is normally performed at beginning of new work, new work crew, or new equipment.

c. After successful work operation pattern is established, testing frequency may be performed at minimum guidelines.

d. Perform additional tests at sites considered questionable by Government, such as suspected incomplete compaction, surfaces that may have become excessively wet or dry since compaction, compacted surfaces torn up by subsequent equipment travel, or other similar circumstances. Frequency of additional testing is at discretion of Government.

Table 31 23 02A – Contractor Materials Testing Requirements and Frequency

PROCEDURE	TEST STANDARD	STANDARD TITLE	MINIMUM FREQUENCY OF TESTING
Soil Classification	ASTM D2487	Classification of Soils for Engineering Purposes	As necessary to classify material to meet specification requirements or to index material for determining density by nuclear method.
	ASTM D2488	Description and Identification of Soils	
Moisture Content	ASTM D2216	Laboratory Determination of Water (Moisture Content of Soil and Rock by Mass.	With in-place density or as required to index material for determining density by nuclear method.
Sand Cone	ASTM D1556	Density and Unit Weight of Soil in Place by the Sand-Cone Method	One test every 500 yd^3 Minimum 1 test per day per compacted backfill operation.
Rapid Construction Control	ASTM D5080	Rapid Determination of Percent Compaction	One test every 500 yd^3 Minimum 1 test per day per compacted backfill operation.
Laboratory Compaction Maximum Dry Density	ASTM D 698, Procedure A	Laboratory Compaction Characteristics of Soil Using Standard Effort	One test every 500 yd^3 Minimum 1 test per day per compacted backfill operation.

Table 31 23 02A – Contractor Materials Testing Requirements and Frequency

PROCEDURE	TEST STANDARD	STANDARD TITLE	MINIMUM FREQUENCY OF TESTING
Laboratory Compaction with Vibratory Hammer	ASTM D7382	Determination of Maximum Dry Unit Weight and Water Content Range for Effective Compaction of Granular Soils Using a Vibrating Hammer	One test every 500 yd^3 Minimum 1 test per day per compacted backfill operation.
Nuclear Method	ASTM D6938	In-Place Density and Water Content of Soil and Soil-Aggregate by Nuclear Methods (Shallow Depth)	One test every 100 yd^3 Minimum 1 test per day per compacted backfill operation. Minimum 1 test per foundation prior to concrete placement.
Oversized Correction	ASTM D4718	Correction of Unit Weight and Water Content for Soils Containing Oversize Particles	When oversize material is between 5 and 30 percent
Rock Factor		USBR Guidelines for Earthwork Construction Control Testing of Gravelly Soils	When oversize material is greater than 30 percent

B. Contractor Support:

1. Provide timely access to areas for density testing, excavate and level an area in compacted material to provide a surface for testing:
   a. Test fills compacted by sheepsfoot rollers one or two lifts below surface.
2. Government may select location of testing.
3. When density is being measured by:
   a. Sand-cone device ASTM D1556, cease construction activity in immediate vicinity of testing.
   b. Nuclear gauge the reading shall be taken with the rod driven to full depth.
4. Dig test pits as requested to examine compacted soil against structures or pipe.

5. Replace compacted backfill within test pits to original requirements.
6. Provide warning lights, flags, or other safety devices as needed by testing personnel.
7. Provide adequate lighting for performing test if required because of darkness.

3.07 FIELD QUALITY ASSURANCE

A. Government may perform test as required to verify contractor quality testing. If Government performs quality assurance testing, provide support as required for Contractor quality testing.

END OF SECTION

SECTION 31 23 10
EARTHWORK FOR SITE AND STRUCTURES

PART 1 GENERAL

1.01 MEASUREMENT AND PAYMENT

A. Common Excavation for Site and Structures:

1. Measurement: Made to excavation paylines shown on drawings or to paylines as directed by COR:

   a. Regardless of quantities removed, measurement for payment will be made to prescribed paylines.

   b. For safety or other reasons, Government reserves the right to require Contractor to excavate beyond prescribed paylines.

   c. Measurement for payment for additional excavation will be made to limits as directed by COR.

2. Payment: Cubic yard prices offered in the Price Schedule:

   a. Includes:

      1) Cost of labor and materials for pumping, unwatering, and dewatering.

      2) Shoring, sheeting, bracing, timbering, safety sloping and other temporary construction necessary to maintain excavations in good order during construction.

      3) Removing such temporary construction where required.

      4) Stockpiling excavated material for compacted backfill.

      5) Disposal of unused or wasted excavated materials.

   b. Includes topsoil stripping, stockpiling and placement quantities.

   c. Over-excavation performed beyond specified or directed paylines and compacted backfill for such over-excavation will be at expense of Contractor.

B. Rock Excavation for Site and Structures:

1. Measurement: Made to excavation paylines shown on drawings or to paylines as directed by COR:

   a. Regardless of quantities removed, measurement for payment will be made to prescribed paylines.

   b. For safety or other reasons, Government reserves the right to require Contractor to excavate beyond prescribed paylines.

c. Measurement for payment for additional excavation will be made to limits as directed by COR.

2. Payment: Cubic yard prices offered in Price Schedules:

a. Includes:

1) Cost of labor and materials for pumping and unwatering.

2) Mechanical breaking, shoring, sheeting, bracing, timbering, safety sloping and other temporary construction necessary to maintain excavations in good order during construction.

3) Removing such temporary construction where required.

4) Stockpiling excavated material for compacted backfill.

5) Disposal of unused or wasted excavated materials.

b. Over-excavation performed beyond specified or directed paylines and compacted backfill for such over-excavation will be at expense of Contractor.

C. Compacted Backfill for Site and Structures:

1. Measurement: Made to structure lines, excavation lines, and compacted backfill lines shown on drawings.

2. Payment: Cubic yard prices offered in the Price Schedules:

a. Includes cost of work associated with excavation or procuring, hauling and placement of necessary material.

b. Material from required excavation used for compacted backfill will be paid for both as excavation when removed from original position and as compacted backfill when placed.

c. Where additional material is obtained from approved borrow pits and used for compacted backfill, payment will be made for compacted backfill only.

d. Replacement of materials where excavation is performed outside of established paylines will be at expense of Contractor.

D. Processing of Site and Foundation Materials:

1. Measurement: Made to Foundation Excavation paylines shown on drawings.

2. Payment: Cubic yard price offered in the Price Schedules.

a. Includes cost of screening oversize materials after excavation of material, and before placement as compacted backfill.

E. Cost:

1. Include costs of excavation and compacted backfill in applicable prices offered in the Price Schedules for flowmeters, valves, chlorination system, and blowoff.

2. Include costs of excavation and compacted backfill for buried electrical items in prices offered in the Price Schedules for appropriate Division 26 Sections.

3. Include costs of excavation and compacted backfill for fencepost footings in items in prices offered in the Price Schedules for Chain Link Fence.

1.02 DEFINITIONS

A. Additional Excavation: Excavation beyond specified lines as directed by COR to remove unsuitable foundation material.

B. Over-excavation: Excavation performed for convenience, fault, or operation of Contractor beyond specified or directed additional excavation lines.

C. Rock Excavation:

1. Material that cannot be ripped using conventional excavation equipment and requires 400 horsepower or larger dozer tractor equipped with ripper rated for hard rock with rock tooth.

2. Material that cannot be excavated with conventional excavation equipment and requires 300 horsepower or larger hydraulic excavator, with rock bucket and teeth, specifically manufactured for rock excavation, and or hydraulic hoe-ram, in areas where it is not feasible for ripping with dozer tractor.

3. Blasting is not permitted.

D. Additional Backfill: Backfill of additional excavation directed by COR

E. Cover: Distance between top surfaces of buried cables, conductors, or conduits and finished grade.

F. Earthwork for Structures: Excavation, placing backfill, and compacting backfill for:

1. Pre-engineered Pump Station.

2. Forebay and Storage Tanks.

3. Vaults.

4. Retaining Wall.

5. Swale and Rundown Channel.

6. Other structures not covered in other Sections.

7. In areas as directed by COR

1.03 REFERENCE STANDARDS

A. ASTM International (ASTM)

1. ASTM D4546-21 — One-Dimensional Swell or Collapse of Cohesive Soils

1.04 SUBMITTALS

A. Submit the following in accordance with Section 01 33 00 – Submittals.

B. RSN 31 23 10-1, Processing Plan:

1. Describe equipment and methods for removing, stockpiling, processing, screening, moistening, placing, and compacting material to achieve requirements in Parts 2.02 and 3.02.
2. Provide schedule and sequence.
3. Include working and stockpiling areas and haul route plans.

C. RSN 31 23 10-2, Test Results:

1. Swell potential test results in accordance with ASTM D4546.
2. Include test date, time, location, person collecting soil samples, and correlating in-situ soil density and moisture information according to Section 31 23 02 – Compacting Earth Materials.

1.05 PROJECT CONDITIONS

A. Soil and rock conditions are described in Section 53 10 00 – Geologic Investigations.

B. Top of weathered bedrock range in depth from 0.4 to 3.8 feet and from 0.0 to 3.4 feet, respectively, from the ground surface (PP2 shale and PP3 sandstone). Imported borrow material and/or processing of on-site soil and bedrock may be necessary to produce sufficient compacted backfill materials.

C. Excavate and process in-situ soils and bedrock, and place compacted backfill to provide a stable foundation for tanks, buildings, vaults, thrust blocks and other structures.

PART 2 PRODUCTS

2.01 EXCAVATED MATERIALS

A. Contractor's operations in excavations shall be such that excavations will yield as much suitable material for use in permanent construction required under these specifications as practicable.

B. Place excavated materials which are too wet for immediate compaction temporarily in stockpiles, and process until moisture content is reduced sufficiently to permit placement.

2.02 MATERIAL FOR COMPACTED BACKFILL

A. Type and amount of material used for compacted backfill, and manner of depositing material shall be subject to approval by COR.

B. Obtain compacted backfill material from required excavations. If sufficient suitable material is not available from this source, obtain additional material from other sources approved by COR:

1. Government makes no guarantee that specified compacted backfill materials are contained in or can be processed from excavated materials.
2. All reasonable effort shall be expended to obtain suitable backfill material from required excavation prior to obtaining commercial sources.

C. Do not place material in backfill when either the material or the surfaces on which it is to be placed are frozen.

D. Do not use material removed during stripping for compacted backfill material.

E. Do not use unprocessed expansive materials for compacted backfill material.

F. Thoroughly mix and evenly moisten to achieve uniform material and to avoid pockets or lenses of variable material. PI less than 15.

G. Material gradation:

1. Maximum particle size: 3-inch diameter.
2. Minimum of 60 percent particles passing the No. 4 sieve size, by weight.

H. Compacted backfill within 2 inches of buried electrical grounding cables, insulated cables, and conduit: Sand or equally fine earth material.

I. Where special compaction is required (in accordance with 31 23 02 – Compacting Earth Materials), compacted backfill is required to have a maximum particle size of 3 inches.

J. Compacted backfill material shall be thoroughly mixed, evenly moistened, and have a swell potential of less than one percent under a load of 1,000 pounds per square foot.

PART 3 EXECUTION

3.01 EXCAVATION, GENERAL

A. Excavate structure foundations to elevations and lines shown on drawings or as directed by COR.

B. Government reserves the right, during progress of work, to vary slopes, grades, and dimensions of excavations from those specified.

C. Government does not represent that excavation performed under these specifications can be made to or maintained at paylines shown on the drawings or described in these specifications.

D. Perform excavation in the dry.

E. Do not excavate in frozen materials without written approval of COR.

F. Blasting: Not allowed.

G. Preserve material below and beyond established lines of excavation in soundest possible condition:

1. Damage to work due to Contractor's operations shall be repaired by and at expense of Contractor.
2. Material beyond required or prescribed excavation lines which is loosened by Contractor's operations shall be removed at expense of Contractor.

3.02 OVER-EXCAVATION

A. If foundation material is excavated beyond lines required to receive structure, fill over-excavation with suitable materials and compact in accordance with Section 31 23 02 – Compacting Earth Materials.

B. If foundation material is disturbed or loosened during excavation or otherwise, compact foundation in place or remove and replace it with suitable material and compact in accordance with Section 31 23 02 – Compacting Earth Materials.

3.03 PROCESSING AND STOCKPILING COMPACTED BACKFILL MATERIAL

A. Stockpile material in maximum 12-inch lifts as it is removed from excavation.

B. Do not compact stockpile material.

C. Wet material as it is stockpiled to minimum of optimum moisture content.

D. Test moisture content in accordance with Section 31 23 02 – Compacting Earth Materials.

E. Excavated materials will require crushing, screening, and/or other processing to meet requirements of Part 2.02. Provide processing equipment and perform work necessary to process excavated materials to produce materials meeting the requirements of these specifications.

F. Compacted backfill material shall be thoroughly mixed and moistened to achieve a uniform material and to avoid pockets or lenses of variable material.

G. Earthwork equipment should be used to uniformly blend and moisture condition, aerate if necessary, stockpile material to achieve a uniform fill material before it is placed as compacted backfill material.

3.04 SURFACES OF EXCAVATION

A. Vertical offsets within rock surfaces are not to extend more than 2 inches unless surfaces are to be covered with concrete or surfacing materials.

3.05 PREPARATION OF STRUCTURE FOUNDATIONS

A. Prepare foundations at structure sites by methods which will provide firm foundations for structures:

1. Finish bottom and side slopes of excavation, upon or against which structure is to be placed, to prescribed dimensions.
2. Moisten and compact prepared surfaces with suitable tools to form firm foundations upon or against which to place structure.

B. Where unsuitable material is encountered in foundation for structure, COR will direct performance of additional excavation to remove unsuitable material:

1. Replacement of materials where additional excavation is performed to be in accordance with Section 31 23 02 – Compacting Earth Materials.

C. If using potentially expansive materials (shale, claystone, mudstone, clay, etc.) for Compacted Backfill below structures, test for swell potential of in-place material in accordance with ASTM D4546, as directed by COR, and as follows:

1. Take one test per 5,000 square feet per lift, or as directed by COR. Take a minimum of one test per day.
2. Swell Potential should be less than one percent under load of 1,000 pounds per square foot.

D. Surfaces of shale, claystone, and/or mudstone that are exposed by excavation are to be kept moist until concrete or earth material are placed on it.

E. Test moisture content of foundation subgrade no more than 12 hours prior to placing concrete in accordance with 31 23 02 – Compacting Earth Materials.

3.06 FOUNDATION INSPECTION

A. Inspection will be performed by Government to obtain a geologic record of the final foundation surface:

1. Provide safe access for Government personnel during inspection.
2. Notify COR at least 2 days before reaching final excavation elevation for foundation.
3. Once an adequate foundation has been obtained, Government will require 2 days, to inspect, map and survey foundation:
   a. Clean surface with straight edge of equipment bucket to expose foundation as directed by COR.
4. Maintain prepared surfaces free of debris and standing water until inspection and geologic mapping are completed.
5. Do not operate equipment in area being inspected until inspection and survey are complete.

3.07 PLACING COMPACTED BACKFILL

A. Place compacted backfill to lines and grades shown on drawings, or as directed by COR.

B. Place compacted backfill carefully and spread in uniform layers so that compacted backfill is homogeneous and free from lenses, pockets, voids, laminations, or other imperfections.

C. Do not place compacted backfill material when either material or surfaces on which it is to be placed are frozen.

D. Subsequent layers of compacted backfill may be placed as soon as compaction of previous layers is completed. Placing of additional materials may be delayed by COR at designated locations for procurement of samples for testing.

E. Additional information is provided in 31 23 02 – Compacting Earth Materials.

3.08 CONTRACTOR FIELD QUALITY TESTING

A. Notify COR within 48 hours of completion of excavation but before compaction. Do not compact until approved by COR.

3.09 COMPACTION

A. Place, moisten, and compact materials in compacted backfill as provided in Section 31 23 02 – Compacting Earth Materials.

B. If potentially expansive materials are used, perform testing in accordance with Part 3.05 above.

3.10 PROTECTION

A. To provide adequate protection for compacted backfill around structure, Government reserves the right to direct Contractor to place enough uncompacted backfill material over compacted backfill within 72 hours after compaction of compacted backfill.

3.11 TRENCHES FOR BURIED ELECTRICAL OR GROUNDING CABLES, INSULATED CABLES OR CONDUCTORS, AND CONDUIT

A. Refer to Division 26 – Electrical.

B. Place compacted backfill consisting of sand, or finer material as approved by COR, within 2 inches of buried electrical grounding cables, insulated cables, and conduit.

3.12 DISPOSAL OF EXCAVATED MATERIALS

A. Dispose of excavated materials which are unsuitable for or are in excess of compacted backfill or other earthwork requirements, as determined by COR, as provided in Section 31 23 39 – Disposal of Excavated Waste Materials.

END OF SECTION

This page intentionally left blank.

SECTION 31 23 22
PIPE TRENCH EARTHWORK

PART 1 GENERAL

1.01 MEASUREMENT AND PAYMENT

A. Cost:

1. Includes the following features of work:

   a. Common Excavation for Pipeline Trenches cost in prices offered in the Price Schedule for Common Excavation for Site and Structure Foundations.

   b. Rock Excavation for Pipeline Trenches cost in prices offered in the Price Schedule for Rock Excavation for Site and Structure Foundations.

   c. Processing Pipeline Backfill Materials cost in prices offered in the Price Schedule for Processing Site and Foundation Materials.

   d. Compacted Backfill Pipeline Trenches cost in prices offered in the Price Schedule for Compacted Backfill for Site and Structure Foundations.

   e. Controlled Low Strength Material (CLSM) cost in prices offered in the Price Schedule for PVC, HDPE and Steel Manifold Piping.

1.02 DEFINITIONS

A. Refer to Section 31 23 10 – Earthwork for Site and Structures.

B. Cover: Distance between top surfaces of buried cables, conductors, or conduits and finished grade.

1.01 REFERENCE STANDARDS

A. American Association of State Highway and Transportation Officials (AASHTO)

1.	AASHTO SSHB-02	Standard Specifications for Highway Bridges, 17th Edition

B. ASTM International (ASTM)

1.	ASTM D4546-21	One-Dimensional Swell or Collapse of Cohesive Soils

1.02 SUBMITTALS

A. Submit in accordance with Section 01 33 00 – Submittals.

B. RSN 31 23 10-1, Processing Plan:

1. Describe equipment and methods for removing, stockpiling, processing, crushing, screening, moistening, placing, and compacting backfill to achieve requirements listed below.
2. Provide schedule and sequence.
3. Include working and stockpiling areas and haul route plans.

C. RSN 31 23 10-2, Test Results:

1. Include test date, time, location, person collecting soil samples, and correlating in-situ soil density and moisture information according to Section 31 23 02 – Compacting Earth Materials.

1.03 PROJECT CONDITIONS

A. Refer to Section 31 23 10 – Earthwork for Site and Structures.

B. Pipe Trench Earthwork includes:

1. Areas designated on drawings for placement of pipe.
2. Areas designated on drawings for placement of drain pipes, foundation drain pipes, overflow drain pipes and sump drain pipes.

PART 2 PRODUCTS

2.01 EXCAVATED MATERIALS

A. Contractor's operations in excavations shall be such that excavations will yield as much suitable material for use in permanent construction required under these specifications as practicable.

B. Place excavated materials which are too wet for immediate compaction temporarily in stockpiles, and process until moisture content is reduced sufficiently to permit placement.

2.02 BEDDING AND EMBEDMENT

A. Either:

1. Controlled low strength materials in accordance with Section 31 23 70 - Controlled Low Strength Material (CLSM).
   a. If CLSM is selected for embedment, CLSM must be used for bedding.
2. Select Material for bedding:
   a. Maximum particle size: 3/4-inches
   b. Soil Type:
      1) Uncompacted, clean, cohesionless gravel or crushed rock with less than 12% of fines.

2) Sand

3. Select Material for embedment:

a. Maximum particle size: 3/4-inches

b. Minimum of 95 Percent compaction

c. Pi of processed and thoroughly mixed materials should be less than 15.

d. See table 31 23 22X – Material Gradation Limits for Embedment

1) Native material can be used if the soil meets the embedment criteria and is not classified as expansive soils.

e. Size	f. Percent by Weight
g. Passing No. 200 sieve	h. 12 or less
i. Passing No. 50 sieve	j. 25 or less

2.03 MATERIALS FOR BACKFILL

A. Type and amount of material used and manner of depositing material subject to approval by COR.

B. Use materials removed in excavating for pipe trenches or from other sources arranged for by Contractor:

1. Government makes no guarantee that specified backfill materials are contained in or can be processed from materials excavated from pipe trenches.

2. All reasonable effort shall be expended to obtain suitable backfill material from required excavation prior to obtaining commercial sources.

C. Do not use material removed during stripping for backfill materials.

D. Do not use organic material or other deleterious material.

E. Do not use unprocessed expansive clays, shales, or claystone in compacted backfill.

F. Thoroughly mix and evenly moisten to achieve a uniform material and to avoid pockets or lenses of variable material. Compacted material shall have a swell potential of less than one percent under load of 1,000 psf.

G. Material gradation:

1. Maximum particle size:

a. Within 1 foot of outside of pipe: 3/4 inches.

b. Within 3 feet of pipe or within special compaction: 3 inches.

c. Other areas: 6-inch diameter.

2. Minimum of 50 percent particles passing the No. 4 sieve size, by weight.

2.04 WARNING TAPE

A. Polyethylene tape.

B. Thickness: 4 mils.

C. Non-detectable.

D. Width, minimum: 6-inches.

E. Color: Blue with silver lettering.

F. Legend repeated at least every 3 feet: "CAUTION: WATERLINE BURIED BELOW – FOR MORE INFORMATION CONTACT THE NAVAJO TRIBAL UTILITIES AUTHORITY"

PART 3 EXECUTION

3.01 GENERAL

A. Perform operations so that land can be restored to original conditions.

B. Do not excavate pipe or keep pipe trench open more than 100 feet ahead of pipelaying, placement of compacted backfill, or compaction operations, unless approved by COR.

1. Placement and compaction operations shall progress and not fall behind pipelaying and excavation operations.

2. If placement and compaction of compacted backfill fall behind pipelaying operations, due to lack of progress or equipment breakdowns, stop excavation and pipelaying operations until sufficient progress has been made as directed by COR.

C. Allow CLSM to obtain required strength before placing pipe backfill.

D. Install warning tape over center of pipe, at least 18 inches below ground, and at least 18 inches above pipe.

3.02 EXCAVATION

A. Excavate pipe trenches for pipelines and pipeline accessories to lines, grades, and dimensions shown on drawings.

B. Government reserves the right, during progress of work, to vary slopes, grades, and dimensions of excavations from those specified.

C. Government does not represent that excavation performed under these specifications can be made to or maintained at paylines shown on the drawings or described in these specifications.

D. Perform excavation in the dry.

E. Do not excavate in frozen materials without written approval of COR.

F. Blasting: Not allowed.

G. Preserve material below and beyond established lines of excavation in soundest possible condition:

1. Damage to work due to Contractor's operations shall be repaired by and at expense of Contractor.
2. Material beyond required or prescribed excavation lines which is loosened by Contractor's operations shall be removed at expense of Contractor.

H. At the end of each shift install an inflatable watertight pipe plug on any exposed end of pipe.

I. Fence open trench with temporary safety fence in accordance with Section 01 56 32 – temporary Safety Fence

3.03 ADDITIONAL EXCAVATION

A. Perform additional excavation in trench bottom for pipe, thrust block and collar foundations as shown on drawings and other additional excavation beyond specified lines, as directed by COR.

3.04 OVER-EXCAVATION

A. If foundation material is excavated beyond specified or directed lines, fill over-excavation with suitable materials and compact in accordance with Section 31 23 02 – Compacting Earth Materials.

B. If foundation material is disturbed or loosened during excavation or otherwise, compact material in place or remove and replace with suitable material and compact in accordance with Section 31 23 02 – Compacting Earth Materials.

3.05 PROCESSING AND STOCKPILING BACKFILL

A. Stockpile material in maximum 12-inch lifts as it is removed from excavation.

B. Do not compact stockpile material.

C. Wet material as it is stockpiled to minimum of optimum moisture content.

D. Test moisture content in accordance with Section 31 23 02 – Compacting Earth Materials.

E. Excavated materials: Require crushing, screening, and/or other processing to meet requirements listed above.

F. Provide processing equipment and perform work necessary to process excavated materials to produce materials meeting requirements of these specifications.

G. Use earthwork equipment blend, moisture condition, and aerate, if necessary, stockpile material to achieve uniform fill material before placement.

3.06 EXCAVATION SURFACES

A. Vertical offsets within rock surfaces: Not to extend more than 2 inches unless surfaces covered with concrete or surfacing materials.

3.07 PREPARATION OF PIPE TRENCH FOUNDATION

A. Provide firm foundations for pipe:

1. Finish bottom and side slopes of excavation, upon or against which pipe is to be placed, to prescribed dimensions.
2. Moisten and compact prepared surfaces to form firm foundations for pipe.

B. Keep exposed surfaces of shale, claystone, and mudstone moist until CLSM or earth materials are placed.

3.08 BEDDING AND EMBEDMENT

A. Place to lines shown on drawings or as directed by COR.

B. Do not drop directly on pipe.

C. Place CLSM in accordance with Section 31 23 70 – Controlled Low Strength Material (CLSM) and as shown on drawings.

1. Allow CLSM to obtain required strength in accordance with Section 31 23 70 – Controlled Low Strength Material (CLSM) before placing pipe and backfill.

D. Place at same elevation on both sides of pipe to prevent unequal loading and displacement of pipe. Elevation difference on sides of pipe shall not exceed:

1. 6-inches for pipe 10-inches or greater.
2. 3-inches for pipe less than 10-inches.

E. Place select material to meet the requirements of drawing 1695-D-60045.

3.09 PIPE INSTALLATION

A. Install pipe in accordance with sections in Division 33 and 35.

3.10 PLACING BACKFILL

A. Place compacted backfill in pipe trenches to lines shown on drawings, or as directed by COR.

B. Do not drop backfill material directly on pipe.

C. Place backfill carefully and spread in uniform layers so that backfill is homogeneous and free from lenses, pockets, voids, laminations, or other imperfections.

D. Do not place backfill when either material or surfaces on which backfill is to be placed are frozen.

E. Additional information for compacted embedment and backfill is provided in Section 31 23 02 – Compacting Earth Materials.

F. Uncompacted backfill: Maximum lift height: 1-foot.

G. Subsequent layers of compacted backfill may be placed as soon as compaction of previous layers is completed. Placing of additional materials may be delayed by COR at designated locations for procurement of samples for testing.

H. Place uncompacted backfill over pipe as approved by COR, if backfilling operations are interrupted for more than 24 hours.

3.11 COMPACTION

A. Compact to lines, grades, widths, and depths shown on drawings, or as directed by OGR.

B. Compact backfill in pipe trenches in layers having about same top elevation on both sides of pipe to prevent unequal loading and displacement of pipe.

C. Place, moisten, and compact materials in compacted backfill as provided in Section 31 23 02 – Compacting Earth Materials.

D. Compacted embedment and backfill layers that do not meet the requirements of these Specifications, based on field quality test results, shall be removed and replaced at Contractor's expense.

3.12 PROTECTION

A. To provide adequate protection for pipe trench material, Government may direct Contractor to place enough uncompacted backfill material over compacted backfill within 72 hours after compaction of backfill.

B. Place uncompacted backfill to minimum depth of 3-feet or compacted backfill to minimum depth of 2 feet above top of pipe before allowing construction equipment to travel over pipe:

1. After these minimum earth covers are in place, maximum equipment loading allowed over pipe shall be HS-20 loading (16,000-pound wheel load) in accordance with AASHTO SSHB.

2. If construction equipment that exerts a larger wheel load is proposed to be used, submit construction equipment loadings to COR for analysis and determination of required backfill depths or other protective measures.

3. If cover does not exceed 2-feet, compaction equipment is limited to walk-behind vibrating roller or tamper and no construction equipment shall travel over the pipe.

3.13 DISPOSAL OF EXCAVATED WASTE MATERIALS

A. Dispose of excavated materials which are unsuitable for or are in excess of compacted backfill or other earthwork requirements, as determined by COR, as provided in Section 31 23 39 - Disposal of Excavated Waste Materials.

END OF SECTION

SECTION 31 23 39
DISPOSAL OF EXCAVATED MATERIALS

PART 1 GENERAL

1.01 MEASUREMENT AND PAYMENT

A. Cost:

1. Include in prices offered in the Price Schedule for items of work requiring excavation.

1.02 DEFINITIONS

A. Waste material: Material from required excavation, which is not suitable or required for compacted backfill, miscellaneous backfill, embedment, bedding, or topsoil.

1.03 SUBMITTALS

A. Submit in accordance with Section 01 33 00 – Submittals.

B. RSN 31 23 39-1, Agreement and Permits:

1. Copy of agreement with owner of land where unused excavated materials shall be placed.
2. Copy of Federal, State, Tribal, and local permits needed to place excavated materials.

PART 2 PRODUCTS

Not Used

PART 3 EXECUTION

3.01 DISPOSAL OF EXCAVATED MATERIALS

A. Waste material from required excavation, which is not suitable or required for backfill, embedment, bedding, or topsoil to an approved location, as approved by COR:

1. Dispose of waste material within site boundaries unless prior approvals of cultural and environmental clearance have been obtained outside of site boundaries.
2. Do not place waste material in wetlands, within 12 feet of drainage channels, within 12 feet of edge of prescribed or actual cuts for laterals, wasteways, or drains.
3. Do not waste material by dumping from top of slope.

4. Grade waste banks to drain, with reasonably even and uniform surfaces that blend with natural terrain:
   a. Minimum slope: 2 percent.
   b. Maximum slope: 4H:1V.

END OF SECTION

SECTION 31 23 50
EARTHWORK FOR ROADS

PART 1 GENERAL

1.01 MEASUREMENT AND PAYMENT

A. Earthwork for Roads:

1. Measurement: Made to lines, grades, and dimensions shown on drawings or prescribed by COR.
2. Payment: Cubic yard price offered in the Price Schedule.
   a. Includes cost of disposing of excavated materials.
   b. No payment will be made for excavation and replacement or refill of excavation beyond prescribed excavation lines.

1.02 DEFINITIONS

A. Refer to Section 31 23 10 – Earthwork for Site and Structures.

1.03 PROJECT CONDITIONS

A. Government may vary lines, grades, and dimensions of excavation or subgrade fill from those shown on drawings based on actual subsurface materials encountered during excavation.

B. Subsurface information is provided in Section 53 10 00 – Geologic Investigations.

PART 2 PRODUCTS

2.01 FILL

A. Clean fill materials in accordance with Section 31 23 02 – Compacting Earth Materials.

B. Maximum Particle Size: 6 inches.

C. Source: Obtain and process materials from excavated materials or other sources, as approved by COR.

PART 3 EXECUTION

3.01 EXCAVATION

A. Excavate to lines, grades, and dimensions shown on drawings or prescribed by COR.

B. Excavate in dry conditions.

C. Backfill excavation beyond prescribed excavation lines with compacted backfill in accordance with Section 31 23 02 – Compacting Earth Materials.

D. Remove foundation material adjacent to excavation which is disturbed or loosened during excavation operations or other work.

3.02 PREPARATION

A. Grade and prepare subgrade free from depressions and soft spots:

1. Additional excavation required for soft soils as directed by COR. Replace with compacted backfill in accordance with 31 23 02 – Compacting Earth Materials.

3.03 PROTECTION

A. Preserve materials below and beyond prescribed excavation lines in soundest possible condition. Repair damage to work caused by construction operations.

B. Provide temporary construction, pumping, bailing, draining, shoring, sheeting, bracing, and other work necessary to maintain excavations during construction operations.

3.04 PLACING

A. Use suitable excavated materials for required backfill. Locations and procedures for stockpiling will be subject to approval by COR.

B. Placing and Compacting:

1. Place in layers and compact in accordance with Section 31 23 02 – Compacting Earth Materials.
2. Obtain OGR approval of subgrade before placing surfacing material.

3.05 DISPOSAL

1. Dispose of excavated materials which are not used or suitable for backfill in accordance with 31 23 39 – Disposal of Excavated Waste Materials.

END OF SECTION

SECTION 31 23 70
CONTROLLED LOW STRENGTH MATERIAL (CLSM)

PART 1 GENERAL

1.01 MEASUREMENT AND PAYMENT

A. Cost:

1. Include in prices offered in the Price Schedule for Earthwork for Site and Structures:
   a. Bedding Zone.
   b. Embedment Zone.
   c. All other including road and utility crossing requirements.

1.02 REFERENCE STANDARDS

A. American Concrete Institute (ACI)

1.	ACI 318-19	Building Code Requirements for Structural Concrete

B. ASTM International (ASTM)

1.	ASTM C33/C33M-24a	Concrete Aggregate
2.	ASTM C94/C94M-24c	Ready-Mixed Concrete
3.	ASTM C143/C143M-20	Slump of Hydraulic-Cement Concrete
4.	ASTM C1602/C1602M-22	Mixing Water Used in the Production of Hydraulic Cement Concrete
5.	ASTM D4832-23	Preparation and Testing of Controlled Low Strength Material (CLSM) Test Cylinders
6.	ASTM D6024/D6024M-24	Ball Drop on Control Low Strength material (CLSM) to determine Suitability for Load Application

1.03 SUBMITTALS

A. Submit in accordance with Section 01 33 00 – Submittals.

B. RSN 31 23 70-1, Approval Data for CLSM:

1. Mix Design: For each CLSM mix:
   a. Mixture proportions.
   b. Material sources:

1) Name and manufacturer of each cementitious material.

2) Name of aggregate sources.

3) Product name and manufacturer of admixtures to be used in mix.

4) Government reserves right to require submission of samples of CLSM materials for testing before or during use in concrete.

c. Physical properties:

1) Trial mixtures:

a) Results from trial batches made within past 6 months.

b) Trial mix test results, three 6-inch-diameter cylinders, each at 7 and 28 days.

c) Average compressive strength of trial batch cylinders at specified design age.

d. Resubmit mix design for change in material source or type.

e. Cementitious materials manufacturer's certifications and test reports within last 6 months.

f. Aggregate test reports for gradation and plasticity, less than 6 months old.

g. Method to determine moisture and consistency of materials to maintain specified strengths. Provide testing frequency.

2. NRMCA Certification of Production Facilities:

a. Automatic digital recording of cementitious materials, aggregate, water, and chemical admixtures.

b. Verification that facility meets requirements for furnishing concrete in subfreezing weather.

c. ACI Personnel Certification(s):

1) Aggregate Testing Technician.

2) Concrete Field-Testing Technician.

3) Concrete Strength Testing Technician.

3. Current calibration of scales, water meters, and admixture dispensers.

4. If Quality Control test results show CLSM does not meet requirements, submit revised mix design.

C. RSN 31 23 70-2, Pipe Anti-Flotation Plan:

1. Method to prevent pipe flotation while placing CLSM.

D. RSN 31 23 70-3, Cold Weather Protection Plan

1. In accordance with ACI 306.

2. Detailed procedures for the production, transportation, placement, protection, curing, and temperature monitoring of concrete during cold weather. Include procedures to be implemented upon abrupt changes in weather conditions or equipment failures. Do not begin cold weather concreting until these procedures have been reviewed and accepted.

E. RSN 31 23 70-4, Quality Control Test Results:

1. Notify COR within 2 hours if testing does not meet specified requirements.
2. If Quality Control Test Results show CLSM does not meet specified requirements, submit a revised mix design.

1.04 DELIVERY, STORAGE, AND HANDLING

A. Furnish complete and legible batch ticket with each batch of CLSM in accordance with ASTM C94. Deliver ticket to COR at jobsite during batch delivery.

1.05 QUALIFICATIONS

A. References for foreman in charge of CLSM placement:

1. Minimum three projects within last 3 years.

PART 2 PRODUCTS

2.01 BACKFILL FOR PIPE TRENCHES

A. See Section 31 23 22 – Pipe Trench Earthwork.

2.02 STEEL PIPE

A. See Section 35 21 95 – Steel Manifold Piping.

2.03 CEMENTITIOUS MATERIALS

A. Cementitious Materials Options:

1. Specified portland cement plus 20 to 80 percent by weight of total cementitious (cement plus pozzolan) specified pozzolan, in accordance with ACI 318.

B. Portland Cement:

1. Meet requirements listed in 03 30 00.

C. Pozzolan:

2.04 Meet requirements listed in 03 30 00. WATER

A. ASTM C1602.

2.05 AGGREGATE

A. Native material is not allowed.

B. Aggregate:

1. ASTM C33.
2. Maximum particle size: 3/8-inch.

2.06 MIX

A. Mixture of Aggregate, Cementitious Materials, Water, and Admixtures:

1. Cementitious material content: Percent by dry weight of aggregate to obtain specified compressive strength.
2. Make trial mixes prior to placing CLSM to determine mixture adequacy:
   a. Determine compressive strength in accordance with ASTM D4832.
   b. Determine slump in accordance with ASTM C143.

B. Water Content: Not to exceed that required to provide mix that will flow and can be pumped.

C. Seven-day Compressive Strength, ASTM D4832: Not less than 50 pounds per square inch (lb/in^2) and not more than 150 lb/in^2.

D. Consistency:

1. Except, when a stiffer mix required to prevent CLSM from flowing down trenches on a steep slope:
   a. Slump, ASTM C143: 8 to 10 inches.

2.07 CLSM TEMPERATURE

A. CLSM Temperature at time of placement: 50 to 85 degrees F (10 to 30 degrees C).

PART 3 EXECUTION

3.01 BATCHING EQUIPMENT

A. Manufacture and deliver in accordance with ASTM C94:

1. In addition to requirements of ASTM C94, use water meter approved by COR to measure and record mix water for each batch.

3.02 PREPARATION

A. Place pipe on soil pads or other approved compressible material such as extruded polystyrene foam insulation.

1. Soil pads shall maintain horizontal and vertical alignment during backfilling operations:
2. Do not create point loads on pipe:
   a. Soil pads shall have lower compressible strength than surrounding CLSM.

3.03 PLACING

A. Notify COR at least 24-hours before batching CLSM. Include quantity of CLSM required for each daily placement. Unless inspection is waived, perform batching in presence of Government inspector.

B. Do not place CLSM during rain, snow, or if excessive moisture is expected during placement.

C. Do not mix or place CLSM when ambient temperature is below 40 degrees F. Except when, ambient temperature is 35 degrees F and rising and daily high is predicted to be above 40 degrees F, CLSM may be placed, if approved by COR.
   1. CLSM may be placed when ambient temperatures are below 40 degrees F if a Cold Weather Protection Plan has been approved prior to placement in cold weather.

D. Place CLSM to lines, grade, and dimensions shown on drawings:
   1. Initially, place CLSM from 1 side of pipe. Where necessary, rod or vibrate CLSM so that CLSM flows under pipe and appears on other side.
   2. Add CLSM to both sides of pipe and rod or vibrate until CLSM completely fills space between pipe and trench.
   3. Do not disturb pipe trench or allow foreign material to become mixed with CLSM.

E. Restrain pipe to prevent flotation during placement of CLSM:
   1. Do not point load pipe.

F. Do not place backfill material over CLSM until CLSM has reached initial set:
   1. As determined by ASTM D6024 (ball drop test) in presence of COR.
   2. Do not place greater than 10-feet of backfill over pipe until CLSM has compressive strength of 50 lb/in^2 or greater.

G. Discharge CLSM within 2 hours of batching.

3.04 CONTRACTOR FIELD QUALITY TESTING

A. Testing:
   1. Independent testing laboratory shall perform sampling, testing, and reporting:

a. Independent testing laboratory shall meet requirements specified in Section 01 46 20 – Testing Agency Services.

b. Government may inspect testing laboratory facilities. COR will notify testing facilities 72-hours before inspection. Periodic inspection may be required by COR.

1)

2. Obtain samples and test to determine compressive strength in accordance with ASTM D4832 and slump in accordance with ASTM C143:

a. Testing frequency:

1) At least once for each shift when placing CLSM.

2) Once every 100 cubic yards or,

3) If consistency of materials change.

b. Acceptance Criteria:

1) 7-day compressive strength, ASTM D4832:

a) Not less than 50 lb/in^2 and not more than 150 lb/in^2.

b) 70 percent of test cylinders shall exceed 75lb/in^2.

c. Make adjustments to mixture to comply with strength requirements.

d. Stop work if specified requirements are not met.

3.05 FIELD QUALITY ASSURANCE

A. Government may obtain samples and test for compressive strength in accordance with ASTM D4832 and slump in accordance with ASTM C143.

3.06 PROTECTION

A. When subsequent lifts of CLSM are to be placed, maintain surface of CLSM in moist condition by use of tarps or water mist until subsequent lift of CLSM is placed.

B. If backfill will not be placed over CLSM within 8-hours, place 6-inch minimum cover of moist backfill over CLSM. Maintain moisture in 6-inch soil cover until additional backfill is placed.

C. If ambient temperature is forecast to be 50 degrees F or less within 8-hours of placing CLSM, place 12-inch minimum additional cover of loose backfill over 6-inch moist backfill cover before end of workday. Do not allow CLSM to freeze.

END OF SECTION

SECTION 31 24 18
GRAVEL DRAIN FOR WATER STORAGE TANKS

PART 1 GENERAL

1.01 MEASUREMENT AND PAYMENT

A. Gravel Drain Material for Water Storage Tanks:

1. Measurement: Volume in place to lines, grades, and dimensions shown on drawings or as directed by COR. No allowance will be made for shrinkage, settlement, or consolidation.
2. Payment: Cubic yard price offered in the Price Schedule:
   a. Includes gravel drain material for ditch and trough lining.
   b. Includes cost of compacting gravel drain material.

1.02 REFERENCE STANDARDS

A. ASTM International (ASTM)

1.	ASTM C88-18	Soundness of Aggregates by Use of Sodium Sulfate or Magnesium Sulfate
2.	ASTM C123/C123M-14	Lightweight Particles in Aggregate
3.	ASTM C127-15	Relative Density (Specific Gravity) and Absorption of Coarse Aggregate
4.	ASTM C131/C131M-20	Resistance to Degradation of Small-Size Coarse Aggregate by Abrasion and Impact in the Los Angeles Machine
5.	ASTM C142/C142M-17	Clay Lumps and Friable Particles in Aggregates
6.	ASTM D4318-17e1	Liquid Limit, Plastic Limit, and Plasticity Index of Soils

1.03 SUBMITTALS

A. Submit in accordance with Section 01 33 00 – Submittals.

B. RSN 31 24 18-1, Laboratory Test Results:

1. Laboratory test results demonstrating gravel drain material meets Table 31 24 18A – Gravel Drain Material Gradation and Table 31 24 18B – Gravel Drain Material Requirements.

PART 2 PRODUCTS

2.01 GRAVEL DRAIN MATERIAL

A. Provide from commercial source.

B. Meet requirements specified in Table 31 24 18A – Gravel Drain Material Gradation and Table 31 24 18B – Gravel Drain Material Requirements.

Table 31 24 18A – Gravel Drain Material Gradation

U.S. Standard Sieve Size	Percent Passing by Weight
1/2-inch	100
3/8-inch	90 – 100
No. 4	20 – 55
No. 8	5 – 30
No. 16	0 – 10
No. 50	0 – 5

Table 31 24 18B – Gravel Drain Material Requirements

Item	Requirement	Reference Standard
Material passing No. 40 sieve	Non-Plastic	ASTM D4318
Specific Gravity	Minimum 2.60	ASTM C127
Clay lumps and Friable Particles	Less than 1.0 percent by weight	ASTM C142
Lose due to Sodium Sulfate Soundness	Less than 10 percent	ASTM C88
Lose due to LA Abrasion	Less than 50 percent	ASTM C131
Chert	Less than 1.0 percent by weight	ASTM C123
Coal and Lignite	Less than 1.0 percent by weight	ASTM C123

C. Limestone or crushed/recycled concrete material sources are not allowed.

D. Material shall meet specified gradation requirements after fill placement and compaction.

PART 3 EXECUTION

3.01 COMPACTION EQUIPMENT

A. Walk-behind vibrating roller or tamper will be required for compaction of gravel drain material.

3.02 PREPARATION OF FOUNDATION

A. Conform to applicable requirements of Section 31 23 02 – Compacting Earth Materials.

3.03 MOISTURE CONTROL

A. Conform to applicable requirements of Section 31 23 02 – Compacting Earth Materials.

3.04 PLACING

A. Place in continuous, approximately horizontal layers not to exceed 6-inches in thickness after compaction.

B. Place material to lines, grades, and dimensions as shown on drawings.

C. Minimize persons working on gravel drain material to prevent segregation, contamination, or breakdown of materials.

D. Control sloughing of any materials from excavated surfaces onto gravel drain material to minimize contamination.

E. Place gravel drain material without damaging the HDPE geomembrane. See Section 31 32 36 – HDPE Geomembrane for Water Storage Tanks.

F. Damage to the HDPE geomembrane is sole responsibility of Contractor and shall be repaired immediately using approved repair techniques at Contractor's expense see Section 31 32 36 – HDPE Geomembrane for Water Storage Tanks.

3.05 REQUIRED COMPACTION

A. Compact with four passes of walk-behind vibrating roller or tamper as approved by COR. Compact in horizontal layers to compacted thickness of 6 inches.

B. Uniformly distribute effort.

C. Use caution when compacting gravel drain material within 2 feet adjacent to pipes.

3.06 PROTECTION

A. Protect material from erosion, contamination, excessive saturation, freezing, and surface drainage.

3.07 FIELD QUALITY ASSURANCE

A. Contractor shall perform one test for every 6-inch layer (minimum of two tests total) to verify that gravel drain material meets gradation requirements in Table 31 24 18A – Gravel Drain Material Gradation after compaction. Sample locations will be determined by COR.

END OF SECTION

SECTION 31 31 30
SOIL-APPLIED HERBICIDE

PART 1 GENERAL

1.01 MEASUREMENT AND PAYMENT

A. Cost:

1. Include in prices offered in the Price Schedule for other items of work.

1.02 SUBMITTALS

A. Submit in accordance with Section 01 33 00 – Submittals.

B. RSN 31 31 30-1, Use Plan.

C. RSN 31 31 30-2, Applicator Certification.

1.03 QUALIFICATIONS

A. Applicators: Certified by appropriate State or local agencies, as required.

1.04 REGULATORY REQUIREMENTS

A. Comply with label directions, and applicable EPA, State, and local laws and regulations.

PART 2 PRODUCTS

2.01 HERBICIDES

A. Label: EPA (Environmental Protection Agency) pesticide registration number.

B. Provide soil-applied herbicide conforming to one of the following:

C. Atrazine:

1. Composed of a finely divided, wettable powder containing a minimum of 80 percent chloro-4-(ethylamino)-6-(isopropylamino)-s-triazine and related compounds.
2. Mix: Minimum of 2 gallons of water per pound of dry product.

D. Bromacil:

1. Composed of a finely divided, wettable powder containing a minimum of 80 percent bromo-3-sec-butyl-6-methyluracil.
2. Mix: Minimum of 2 gallons of water per pound of dry product.

E. Prometon:

1. Composed of a liquid emulsifiable solution containing a minimum of 25 percent 2-methoxy-4, 6-bis isopropylamino-s-triazine.

2. Mix with water:

a. For small areas, add sufficient water to provide thorough and uniform coverage.

b. For large areas, add concentrate to 100 gallons of water per acre.

F. Commercial mixtures meeting requirements may be used.

PART 3 EXECUTION

3.01 PREPARATION

A. Apply herbicide after gravel surfacing has been placed.

3.02 APPLICATION

A. Apply herbicide to gravel surfacing placed under these specifications:

1. Select one herbicide from those specified.

2. Apply soil-applied herbicide at following rate:

a. Atrazine: Equivalent of 0.035 pound of dry product per 100 square feet (about 15 pounds per acre).

b. Bromacil: Equivalent of 0.035 pound of dry product per 100 square feet (about 15 pounds per acre).

c. Prometone: Equivalent of 0.017 gallon of herbicide concentrate per 100 square feet (about 7 1/2-gallons per acre).

B. Apply herbicide only with approval of COR.

C. Apply uniformly.

D. During application, continuously agitate suspension.

END OF SECTION

SECTION 31 32 32
GEOTEXTILE

PART 1 GENERAL

1.01 MEASUREMENT AND PAYMENT

A. Geotextile:

1. Measurement: Surface area of geotextile placed for both layers beneath the pipe, except no allowance will be made for seam overlap, repairs, or waste.
2. Payment: Square yard price offered in the Price Schedule.

1.02 REFERENCE STANDARDS

A. ASTM International (ASTM)

1.	ASTM D4355/D4355M-21	Deterioration of Geotextiles by Exposure to Light, Moisture, and Heat in a Xenon-Arc Type Apparatus
2.	ASTM D4491/D4491M-22	Water Permeability of Geotextiles by Permittivity
3.	ASTM D4533/D4533M-15	Trapezoid Tearing Strength of Geotextiles
4.	ASTM D4632/D4632M-15a	Grab Breaking Load and Elongation of Geotextiles
5.	ASTM D4751/D4751-21a	Determining Apparent Opening Size of a Geotextile
6.	ASTM D5261-10(2018)	Measuring Mass per Unit Area of Geotextiles
7.	ASTM D6241-22	Static Puncture Strength of Geotextiles and Geotextile-Related Products Using a 50-mm Probe

1.03 SUBMITTALS

A. Submit the following in accordance with Section 01 33 00 - Submittals

B. RSN 31 32 32-1, Certifications:

1. Include manufacturer's certified test results covering properties listed in Table 31 32 32A – Geotextile Physical Properties.
2. Geotextile furnished meets specified chemical, physical, and manufacturing requirements.
3. Sewn seams, if used:

a. Certification stating that polymeric threads to be used for sewing have chemical resistance properties equal to or exceeding those of the geotextile.

b. Include data showing that sewn seams have tensile strength of not less than specified percent of parent geotextile material (70 percent).

C. RSN 31 32 32-2, Installation Instructions:

1. Product literature including the manufacturer's installation instructions.

D. RSN 31 32 32-3, Samples:

1. Representative sample (8 inch by 10 inch)

2. Mark samples:

a. Project name and contract number.

b. Product identification.

c. Lot number.

d. Roll number.

e. Machine direction.

E. RSN 31 32 32-4, Pre-Construction:

1. Lot and roll numbers to be shipped.

2. Manufacturer's Quality Control data for rolls to be shipped.

3. Method to protect exposed geotextile, when covering is not possible within 14 days.

F. RSN 31 32 32-5, Post Construction:

1. As-Built Drawings including final panel layout indicating all field seams, field seam test results and repairs.

1.04 DELIVERY, STORAGE, AND HANDLING

A. Wrap geotextile rolls in relatively impermeable and opaque protective covers.

B. Mark or tag geotextile rolls with manufacturer's name, product identification, lot number, roll number, and roll dimensions.

C. Protect geotextile from ultraviolet light exposure, temperatures greater than 140 degrees F (60 degrees C), precipitation or other inundation, mud, dirt, dust, puncture, cutting, or other damaging or deleterious conditions.

D. Elevate and cover material stored outside with waterproof membrane.

PART 2 PRODUCTS

2.01 GEOTEXTILE

A. For underneath conduit, woven geotextile comprised of long-chain polymeric filaments composed of at least 85 percent, by weight, polyolefins or polyesters. For access road and levee road, a non-woven geotextile.

B. Orient filaments into stable network which retains its structure during handling, placement, and long-term service.

C. Stabilizers or inhibitors added to filament base material: Resist deterioration due to ultraviolet or heat exposure.

D. Geotextile edges: Selvage or otherwise finished to prevent outer material from pulling away.

E. Conform to roll values listed in Table 31 32 32A - Geotextile Physical Properties.

1. Values listed are minimum average roll values (MARVs), unless otherwise noted.
2. Test results for weaker principal direction shall meet or exceed minimum values listed in the table.
3. Mass per unit area is a nominal value and is provided for information purposes only.

F. Direct exposure to sunlight: Withstand 14 days with no measurable deterioration.

Table 31 32 32A. - Geotextile Physical Properties For Conduit

Property	Test Method	Required Values
Grab tensile	ASTM D4632	550 lbs
Trapezoidal tear	ASTM D4533	200 lbs
Puncture strength	ASTM D6241	1800 lbs
UV resistance – tensile strength retained at 500 hours, minimum	ASTM D4355	70 percent

Table 31 32 32A. - Geotextile Physical Properties For Access Road and Levee Road

Property	Test Method	Required Values
Grab tensile	ASTM D4632	200 lbs
Trapezoidal tear	ASTM D4533	75 lbs
Puncture strength	ASTM D6241	700 lbs
UV resistance – tensile strength retained at 500 hours, minimum	ASTM D4355	70 percent

PART 3 EXECUTION

3.01 SUBGRADE PREPARATION

A. Prepare surface upon which geotextile is to be placed to a firm surface, reasonably even and smooth, and free of offsets, abrupt indentations, and protruding materials greater than 1-1/2 inches.

B. Roll with vibratory roller or plate compactor if deemed necessary by the COR.

C. Fill low spots with compacted native material.

D. Obtain COR approval of subgrade before installing geotextile.

3.02 INSTALLATION

A. Place geotextile in the manner and at locations shown on drawings.

B. Lay geotextile smoothly, free of tension, stress, folds, wrinkles, or creases so far as is practical and except where required in these specifications.

C. Shingle overlaps on slopes with upstream roll placed over downstream roll.

D. In the presence of wind, weight geotextiles with sandbags or equivalent until cover material placed.

E. Do not entrap stones, soil, excessive dust, or moisture in geotextile that could damage geotextile or hamper subsequent seaming.

F. Do not drive or operate equipment directly on geotextile.

G. Cover geotextile within 14 days after geotextile placement.

1. If covering geotextile with specified material is not possible within 14 days, protect exposed geotextile with suitable cover approved by the Government.
2. Replace geotextile not protected.

3.03 SEAMING

A. For conduit geotextile join adjacent sheets of geotextile by sewing. For access road and levee road geotextile, join adjacent sheets by overlapping one foot, sewing is not necessary.

B. Sewn seams:

1. Interlocking or sewn twice.
2. Thread:
   a. Contrasting color.

b. Chemical resistance: Equal to geotextile.

3. Sew geotextiles continuously. Spot sewing is not allowed.

4. Sewn seam strength: Not less than 70 percent of parent material strength.

3.04 REPAIRS

A. At placement, geotextile will be rejected if it has defects, rips, holes, flaws, deterioration, contamination, or damage.

B. Replace or repair geotextile damaged during installation or placement of cover in the following manner at no additional cost:

1. Remove cover from damaged area of geotextile.

2. Remove any soil or other material which may have penetrated torn geotextile.

3. Repair damaged geotextile by placing additional layer of geotextile to cover damaged area and either sew the patch to undamaged geotextile according to sewing requirements stated above or overlap undamaged geotextile by at least 3 feet on all sides.

3.05 CONTRACTOR FIELD QUALITY EXAMINATION

A. After installation, examine entire geotextile surface to ensure that potentially harmful foreign objects are not present.

B. Remove foreign objects or replace geotextile.

END OF SECTION

This page intentionally left blank.

SECTION 31 32 36

HDPE GEOMEMBRANE FOR WATER STORAGE TANKS

Need spec for geomembrane in the rundown channel. The geomembrane does not need to be as robust as the on for the tank.

PART 1 GENERAL

1.01 MEASUREMENT AND PAYMENT

A. HDPE Geomembrane for Water Storage Tanks:

1. Measurement: Geomembrane surface area as shown on drawings. No allowance will be made for seam overlap, repairs, or waste.
2. Payment: Square yard price offered in the Price Schedule.

1.02 REFERENCE STANDARDS

A. ASTM International (ASTM)

1.	ASTM D792-20	Density and Specific Gravity (Relative Density) of Plastics by Displacement
2.	ASTM D1004-21	Tear Resistance (Graves Tear) of Plastic Film and Sheeting
3.	ASTM D1505-18	Density of Plastics by the Density-Gradient Technique
4.	ASTM D1603-20	Carbon Black in Olefin Plastics
5.	ASTM D3895-19	Oxidative Induction Time of Polyolefins by Differential Scanning Calorimetry
6.	ASTM D4437-16(2018)	Non-Destructive Testing (NDT) for Determining the Integrity of Seams used in Joining Flexible Polymeric Sheet Geomembranes
7.	ASTM D4833-07(2020)	Index Puncture Resistance of Geomembranes and Related Products
8.	ASTM D5323-19a	Determination of 2% Secant Modulus for Polyethylene Geomembranes
9.	ASTM D5397 20	Evaluation of Stress Crack Resistance of Polyolefin Geomembranes Using Notched Constant Tensile Load Test
10.	ASTM D5596-03(2021)	Microscopic Evaluation of the Dispersion if Carbon Black in Polyolefin Geosynthetics
11.	ASTM D5617-04(2015)	Multi-Axial Tension Test for Geosynthetics

12.	ASTM D5721-08(2018)	Air-Oven Aging of Polyolefin Geomembranes
13.	ASTM D5820-95(2006)	Standard Practice for Pressurized Air Channel Evaluation of Dual Seamed Geomembranes
14.	ASTM D5885-20	Oxidative Induction Time of Polyolefin Geosynthetics by High-Pressure Differential Scanning Calorimetry
15.	ASTM D5994-10(2021)	Measuring Core Thickness of Textured Geomembrane
16.	ASTM D6497-02(2021)	Mechanical Attachment of Geomembrane to Penetrations or Structures
17.	ASTM D6693-20	Tensile Properties of Nonreinforced Polyethylene and Nonreinforced Flexible Polypropylene Geomembranes
18.	ASTM D6706-01(2021)	Standard Test Method for Measuring Geosynthetic Pullout Resistance in Soil
19.	ASTM D7238-20	Effect of Exposure of Unreinforced Polyolefin Geomembrane Using Fluorescent UV Condensation Apparatus
20.	ASTM D7466-10(2015)e1	Asperity Height of Textured Geomembrane

B. Geosynthetics Research Institute Standards (GRI)

1.	GRI GM 13-2021	Test Methods, Test Properties, and Testing Frequency for High Density Polyethylene (HDPE) Smooth and Textured Geomembranes
2.	GRI GM 19-2020	Seam Strength and Related Properties of Thermally Bonded Polyolefin Geomembrane/Barriers

1.03 SUBMITTALS

A. Submit in accordance with Section 01 33 00 – Submittals.

B. RSN 31 32 36-1, Qualifications:

1. Installation company:
   a. Name and address.
   b. Documentation of previous experience with specified geomembrane:
      1) Project location, names of facility and owner(s), and purpose of completed facility.

2) Contact person at facilities who can discuss projects listed, such as project manager or designer.

3) Geomembrane type and thicknesses, total square footage installed, and installation date.

4) Types of seaming and patching equipment used.

c. Documentation of previous experience with specified geomembrane for onsite personnel.

2. Manufacturer:

a. Name and address.

b. Name and address of panel fabricator, if different from manufacturer.

c. Documentation of previous experience with specified geomembrane:

1) Location, names of facility and owner(s), and purpose of completed facility.

2) Contact person at facilities who can discuss projects listed, such as project manager or designer.

3) Geomembrane type and thicknesses, total square footage installed, and installation date.

d. Descriptive documentation of manufacturer's quality control program.

C. RSN 31 32 36-2, Product Certificates, Test Reports, and Instructions:

1. Manufacturer's certification that resin used in manufacture of HDPE geomembrane being furnished meets requirements of these specifications.

2. Copies of quality control certificates issued by resin supplier.

3. Certification that the HDPE geomembrane and the extrusion welding rod or pellets produced for use under this contract have the same properties and are compatible.

4. Certified test results of physical properties tests listed in Table 31 32 36A – HDPE Geomembrane Physical Properties. Submit test results as specified in GRI GM 13. Include production date, roll goods number, and quantity represented.

5. Manufacturer's instructions for delivery, storage, and handling of geomembrane materials.

D. RSN 31 32 36-3, Geomembrane Installation Plan:

1. Details of geomembrane installation:

a. Work schedule.

b. Panel Layout:

1) Location, size, orientation, and identification of panels and continuous seams.

c. Sequencing of panel installation.

d. Equipment and procedures for:

1) Handling and installing panels.

2) Continuous seaming.

3) Geomembrane boots around penetrations.

4) Field testing adequacy of seaming equipment and seams.

5) Geomembrane attachment to concrete structures.

6) Cleaning, protecting, and repairing geomembrane and seams.

7) Wrinkle management.

e. Number of crews and crew size.

f. Contractors Quality Control (QC) Plan.

g. Placement method.

E. RSN 31 32 36-4, Pre-Construction:

1. Lot and roll numbers.

2. Manufacturer QC data for rolls to be shipped.

3. Manufacturer's data and certifications for resin and weld rod.

4. Manufacturer's Warranty.

F. RSN 31 32 36-5, Construction:

1. Quality Control Tests.

2. Surveyed panel layout drawings.

3. Locations of patches, repairs, and destructive samples.

4. Deviations from panel layout drawings submitted as part of geomembrane installation plan.

1.04 QUALIFICATIONS

A. Onsite Geomembrane Installation Supervisor:

1. Installed or supervised installation and seaming of a minimum of 1,000,000 square feet of specified geomembrane.

B. Onsite Geomembrane Master Welder (Seamer):

1. Within last 5-years, completed a minimum of 500,000 square feet of specified geomembrane seaming work using type of seaming apparatus proposed for use on

this project. Master welder (seamer) may also be installation supervisor/field engineer.

C. Other Onsite Geomembrane Welders (Seamers):

1. Within last 3-years, seamed a minimum of 100,000 square feet of specified geomembrane.

D. Geomembrane Manufacturer:

1. Completed facilities totaling at least 2,000,000 square feet of specified geomembrane.

E. Installer:

1. At least three separate and satisfactory installations totaling at least 1,000,000 square feet of the specified geomembrane.

1.05 DELIVERY, STORAGE, AND HANDLING

A. Ship, handle, store, and care for geomembrane in accordance with manufacturer's instructions.

B. Pack geomembrane rolls and panels in snug-fitting containers having smooth, abrasive-free interior to prevent damage to geomembrane during transit and handling:

1. Use containers having structurally sound bottoms designed for lifting with forklift-type trucks or approved cables or slings.

2. Mark each container of geomembrane panels with name of material, approved roll good numbers, specifications number, quantity contained, name of Contractor, and order or purchase number.

C. Do not stack rolls more than 3 rolls high.

D. Cover rolls of geomembrane with tarp if onsite for more than 30 days.

E. Protect geomembrane rolls from puncture, dirt, grease, water, moisture, mud, mechanical abrasions, excessive heat or cold, direct sunlight or other damage.

1.06 PROJECT ENVIRONMENTAL REQUIREMENTS

A. Do not perform field seaming when geomembrane is wet or when wind is displacing geomembrane panels.

B. Seam only when air temperature is above 35 degrees F and below 104 degrees F.

C. Expect wind and extreme temperature variations.

1.07 WARRANTY

A. Provide manufacturer's warranty that HDPE geomembrane material is free of defects or failure for a period of 20 years.

PART 2 PRODUCTS

2.01 HDPE GEOMEMBRANE

A. HDPE Geomembrane:

1. 80-mil HDPE (High Density Polyethylene) Double Textured (textured on both sides) meeting requirements of GRI GM 13.
2. Stabilizers and biocides: Impart durability.
3. Pigment:
   a. Carbon black to produce opaque film ranging from dark gray to black in color.
   b. Disperse carbon black evenly to produce a uniform color.
4. Finish: Textured on both sides.
5. Roll edges: Smooth (non-textured) to facilitate seaming.
6. Uniform throughout and free from dirt, oil, foreign matter, scratches, cracks, creases, bubbles, tears, holes, pinholes, or other defects which may affect its serviceability.
7. Conform to requirements of Table 31 32 36A – HDPE-Geomembrane Physical Properties. Unless otherwise indicated, required values are minimum average values when tested in weaker principal direction. Test frequency in accordance with GRI GM 13.
8. Seam Strengths: 4 of 5 specimens must meet specified values. Fifth specimen must demonstrate 80 percent of listed value. Seam failure modes shall be Film Tear Bond (FTB).

Table 31 32 36A – HDPE-Geomembrane Physical Properties

Property	Test Method	Requirement
Thickness, minimum average Lowest individual, 8 of 10 readings Lowest individual of 10 readings	ASTM D5994	76 mils 72 mils 68 mils
Asperity Height[1]	ASTM D7466	10 mils
Sheet Density	ASTM D1505 ASTM D792	0.94 g/cc

Table 31 32 36A – HDPE-Geomembrane Physical Properties

Property	Test Method	Requirement
Tensile properties[2]: Yield Strength Breaking Strength Yield Elongation Break Elongation	ASTM D6693	 168 lbs/inch 120 lbs/inch 12 percent 100 percent
Tear Resistance	ASTM D1004	56 lbs
Puncture Resistance	ASTM D4833	120 lbs
Stress Crack Resistance[3]	ASTM D5397	300 hours
Carbon Black Content[4]	ASTM D1603	2.0 to 3.0 percent
Carbon Black Dispersion	ASTM D5596	Note 5
Oxidative Induction Time (OIT) – Standard OIT	 ASTM D3895	 100 minutes
Oven Aging at 85°C High pressure OIT – Percent retained after 90-days	ASTM D5721 ASTM D5885	 80 percent
UV Resistance[6] High Pressure OIT – (Percent retained after 1,600 hours)	ASTM D7238 ASTM D5885	 50 percent
Roll Dimensions Width Length Area Gross Weight		 23 feet 375 feet 8,625 square feet 3,470 lbs (approx.)

Table 31 32 36A – HDPE-Geomembrane Physical Properties

Property	Test Method	Requirement

Notes:

1. Of 10 readings; 8 must be ≥ 7 mils and lowest individual reading must be ≥ 5 mils.
2. Machine direction (MD) and cross machine direction (XMD) average values should be on the basis of 5 test specimens each direction. Yield elongation is calculated using a gauge length of 1.3-inches. Break elongation is calculated using a gauge length of 2.0-inches.
3. The yield stress used to calculate applied load for the SP-NCTL test should be the mean value via MQC testing.
4. Other methods such as ASTM D4218 or microwave methods are acceptable if an appropriate correlation can be established.
5. Carbon black dispersion for 10 different views. Nine in Categories 1 and 2 with one allowed in Category 3.
6. The condition of the test should be 20-hours UV cycle at 75 degrees C followed by 4-hours condensation at 60 degrees C.
7. UV resistance is based on percent retained value regardless of the original HP-OIT value.

2.02 HDPE-EMBEDMENT STRIP

A. HDPE-embedment strips (rondels) shall be 6-inch wide with anchor-fingers of 1-inch deep for embedment into the concrete structure/foundation (GSE PolyLock System or equal).

B. HDPE-embedment strips shall have a minimum tensile strength of 4,000 lb/in^2.

2.03 RUBBER GASKETS

A. Rubber gasket shall be type SCE-42 Neoprene/EPT/SBR Closed Cell Medium, 1/4-inch thick by 2-inch wide, with a hardness of 40 to 50 durometer, or solid Butyl Rubber Gasket meeting the same requirements.

2.04 STAINLESS STEEL CLAMPS

A. Stainless steel type 304 clamp, 1/8-inch thick by 1.5-inch wide.

2.05 FLEXIBLE POLYURETHANE SEALANT

A. Flexible polyurethane sealant with a hardness of 40 to 50 durometer, a minimum elongation of 500 percent, and a minimum joint movement of 30 percent (Sikaflex-1a or equal).

2.06 ACCESORIES

A. Other details in accordance with HDPE geomembrane manufacturer's recommendations.

2.07 SOURCE QUALITY ASSURANCE

A. COR reserves the right to inspect and obtain samples for testing during factory manufacture/fabrication at beginning of production and subsequently.

PART 3 EXECUTION

3.01 SUBGRADE PREPARATION

A. Prepare surface upon which HDPE geomembrane is to be placed to a firm surface, reasonably even and smooth, and free of abrupt indentations and protruding materials (offsets) greater than 3/4-inch.

B. Remove any objectionable foreign matter that may puncture HDPE geomembrane.

C. Obtain COR approval of subgrade before installing HDPE geomembrane.

3.02 INSTALLATION

A. Install geomembrane in accordance with this Section, as shown on drawings, and in accordance with approved installation plan.

B. Do not drive equipment on HDPE geomembrane.

C. Properly protect and maintain any completed geomembrane installations during periods of installation inactivity in accordance with approved installation plan.

D. Install geomembrane rolls with seams running up and down the slopes. Factory and field seams are not allowed perpendicular to the side slopes unless approved by COR.

E. Place geomembrane in a slackened condition so it will conform to subgrade contour without being taut when covered with cover material.

F. Ballast to prevent relocation of compensating slack by wind and to prevent uplift by wind at edges, ends, and other locations as required.

G. Staking through geomembrane is not allowed.

H. Overlap adjacent sheets of geomembrane and shingle downstream.

I. Cover geomembrane as soon as possible after installation.

J. Damage to geomembrane is sole responsibility of Contractor and shall be repaired immediately using approved repair techniques at Contractor's expense.

K. Pre-fabricate complete HDPE-embedment strips (rondel) and attach to foundation structure before pouring foundation concrete. Pre-fabricated complete HDPE-embedment strips (rondel) will be composed of welded sections of HDPE-embedment strips, thereby eliminating any gaps between sections after concrete cures, as shown on drawing and in accordance with approved geomembrane installation plan.

L. Pre-fabricate HDPE pipe-penetration boots with welded seams as required in Article 3.03, in accordance with these specifications, as shown on drawings, with manufacturer's requirements, and in accordance with approved geomembrane installation plan.

M. Wrinkles:

1. Install geomembrane and cover materials so to minimize geomembrane wrinkles.
2. Cut-out and repair wrinkles or "fishmouths" in geomembrane and seams during coolest part of the day as determined by COR before covering.
3. Install geomembrane and cover materials to achieve intimate contact (pressed-fit) between subgrade, geomembrane, and cover material.
4. Work geomembrane wrinkles upslope.
5. Install cover material over geomembrane during coolest part of the day or as approved by COR.

3.03 FIELD SEAMS

A. Perform continuous field seaming in accordance with manufacturer's instructions, approved geomembrane installation plan and this Section.

B. Field seams shall form continuous, homogeneous connection between geomembrane panels.

C. Use dual-track hot wedge welds as primary field seeming method:

1. Use extrusion welds for patches and repairs where dual-track hot wedge welds are not possible.

D. Install and field seam geomembrane under direct guidance of geomembrane manufacturer's technical representative and in direct presence of installer's geomembrane installation supervisor/field engineer and/or master welder.

E. Ambient Conditions:

1. Do not perform field seaming when geomembrane is wet or when wind is displacing geomembrane panels.
2. Seam only when air temperature is above 40 degrees F and below 90 degrees F.

F. Contact surfaces to be field seamed shall be dry and thoroughly cleaned of all dirt, dust, grease, oil, and other foreign materials.

G. Where seaming of geomembrane panels is required to fabricate the connection between separate portions of geomembrane installation, Contractor shall remove any protective materials used, such as tape, and shall thoroughly clean geomembrane surface(s) to be seamed, using appropriate cleaning agents.

H. Joining adjacent panels:

1. Overlap geomembrane according to manufacturer's recommendations.
2. Fusion weld using only approved methods for primary field seaming method.
3. Finished overlap shall be a minimum of 4-inches, provided, that overlap is sufficient to allow peel tests to be performed on seam.
4. For cross seam tees associated with fusion welding: panel intersections consisting of three or more panels shall be patched and extrusion welded to a minimum distance of 6-inches on each side of the patch.

I. Patching geomembrane:

1. Finished overlap shall be a minimum of 6-inches, provided, that overlap sufficient to allow peel tests to be performed on seam.
2. Use only rounded or oval patches.
3. Cut “fishmouths” or wrinkles along the ridge of the “fishmouth” (wrinkle) to achieve a flat overlap. Seam the cut “fishmouth” or wrinkle and patch any portion where the overlap is insufficient.

3.04 ATTACHMENT DETAILS

A. Attach geomembrane to HDPE-rondel (embedment strips) with welded seams as required in Section 3.03, in accordance with these specifications, as shown on drawings, with manufacturer’s requirements, and in accordance with approved geomembrane installation plan:

1. No voids or spaces shall be left beneath the geomembrane where geomembrane attaches to concrete structures.

B. Attach geomembrane around existing pipe penetrations with geomembrane boots and using two stainless steel clamps, including a rubber gasket for each clamp, in accordance with drawings and manufacturer’s requirements.

C. Flexible polyurethane sealant shall be placed along the top edge of geomembrane boot and clamp attachment, as shown on drawings.

3.05 REPAIRS

A. Repair field seams and other damaged area according to manufacturer's recommendations and as approved in geomembrane installation plan.

B. Repair geomembrane with oval or rounded patch, which overlaps undamaged geomembrane not less than 6-inches.

C. Test repairs using vacuum method.

D. Repair and retest unbounded areas detected by air pressure testing and by vacuum testing.

3.06 CONTRACTOR QUALITY CONTROL

A. General:

1. Perform all testing in presence of COR.
2. Perform tests at locations and frequencies specified in this section and at other locations and times as determined by COR.

B. Test equipment:

1. Furnish a portable tensiometer with a load readout device.
2. Vacuum chamber (box): Apparatus manufactured by American Parts and Service Co., 2201 West Commonwealth Avenue, PO Box 702, Alhambra CA 91802, or equal, having the following essential characteristics:
   a. Vacuum box assembly consisting of rigid housing, transparent viewing window, and soft neoprene gasket attached to the bottom, port hole or valve assembly, and gauge to indicate chamber vacuum.
   b. Steel vacuum tank and pump assembly equipped with pressure controller and pipe connections.
   c. Rubber pressure/vacuum hose with fittings and connections.

C. Test seams:

1. Prepare test seams using excess geomembrane material to verify that field seaming conditions are satisfactory.
2. Conduct test seams at the beginning of each seaming shift, at a change of weather conditions, and at least once each 4hour period during operation for each seaming crew.

3. If a test seam fails to meet seam specifications listed in Table 31 32 36A – HDPE-Geomembrane Physical Properties, seaming apparatus and seaming crew shall not be accepted and shall not be used for field seaming until deficiencies are corrected and two consecutive successful test seams have been achieved.
4. Test seam shall be at least 3-feet in length with seam centered lengthwise.
5. Specimens for testing:
   a. 1-inch-wide specimens cut from opposite ends of test seam.
   b. Not obtained from first or last 6-inches of test seam.
6. Test five specimens in shear and five specimens in peel in accordance with GRI GM 19.

D. Destructive Test for Field Seams:
1. Remove 12-inch by 36-inch samples at locations selected by COR, or when conditions indicate concern for integrity of field seams:
   a. Standard testing frequency shall be every 500 linear feet of seam length or at a minimum one sample per day. Testing frequency may be increased or decreased at discretion of COR depending on results of Destructive Tests.
   b. Repair resulting holes in geomembrane with rounded patches and vacuum test.
2. Take 1/3 of Destructive Test sample for Contractor testing. Test 5 shear and 5 peel specimens taken at random from each sample for conformance to values listed in Table 31 32 36A - HDPE-Geomembrane Physical Properties.
3. Overnight mail remaining 2/3 of Destructive Test sample for COR testing and archiving to Bureau of Reclamation, Attn: Code 86-68314, Sixth and Kipling, Building 67, Room 152, Denver CO 80225.

E. Air Pressure Test for dual-track hot wedge welds:
1. Dual-track hot wedge welds shall be non-destructively tested, evaluated, and approved in accordance with ASTM D5820.
2. Demonstrate procedure for air pressure testing to COR for approval before testing begins.
3. Test Procedures:
   a. Pressurize channel between the dual-track hot wedge welds.
   b. Minimum channel Pressure: 30 psi.
   c. Minimum Dwell time: 5-minutes.
   d. Allowable pressure drop: 2 psi.

F. Vacuum testing:

1. Non-destructive test extrusion weld seams by vacuum method in accordance with ASTM D4437.
2. Demonstrate procedure for vacuum seam testing to Government for approval before testing is begun.
3. Test procedures:
   a. Perform vacuum test with soapy solution.
   b. Maintain at least 5 psi vacuum for at least 15 seconds, without bubbles appearing from seam.
   c. Overlap 3-inches of seam with vacuum box between tests to ensure that all sections of seam are tested.

G. Recording Results:

1. Record results of test seam and field seam testing and provide daily documentation to COR at end of each shift.
2. Identify field seams, by panel and location where applicable, that initially failed seam testing.
3. Include evidence that field seams or welding equipment were repaired and successfully retested.

H. Do not work above geomembrane layer until:

1. Testing is completed and approved.
2. COR has approved work to begin.

END OF SECTION

SECTION 31 37 00
RIPRAP

PART 1 GENERAL

1.01 MEASUREMENT AND PAYMENT

A. Riprap:

1. Measurement: Volume measured to outlines placed and to thickness shown on drawings or as directed by COR.
2. Payment: Cubic yard price offered in Price Schedule including:
   a. Rock spalls and gravel to fill voids in riprap.

1.02 REFERENCE STANDARDS

A. ASTM International (ASTM)

1.	ASTM C88-18	Soundness of Aggregates by Use of Sodium Sulfate or Magnesium Sulfate
2.	ASTM C97-18	Absorption and Bulk Specific Gravity of Dimension Stone
3.	ASTM C535-16	Standard Test Method for Resistance to Degradation of Large-Size Coarse Aggregate by Abrasion and Impact in the Los Angeles Machine

1.03 SUBMITTALS

A. Submit in accordance with Section 01 33 00 – Submittals.

B. RSN 31 37 00-1, Approval Data and Test Results:

1. Name and location of commercial rock source.
2. Gradation of rock used for riprap.
3. Certified laboratory test results demonstrating rock meets specified material requirements.

PART 2 PRODUCTS

2.01 ROCK

A. Rock from approved sources shall be excavated, selected, and processed to meet specified quality and grading requirements at the time rock is installed.

B. Consist of hard, dense, durable stone, angular in shape and resistant to weathering to ensure permanence in structure and climate in which it is used.

C. Riprap physical properties:

1. Specific Gravity, ASTM C97, Minimum: 2.50.
2. Absorption, ASTM C97, Maximum: 2 percent.
3. Loss, Sulfate Soundness, ASTM C88, Maximum: 10 percent.
4. Percent wear of not more than 60 as determined by ASTM C535.

D. Rounded stone or boulders shall not be used as riprap material.

E. Individual rock shape:

1. Maximum dimension not greater than 3 times minimum dimension.

F. Conform to gradation requirements given in Table 31 37 00A – Riprap Gradation Requirements. Control of gradation will be by visual inspection.

Table 31 37 00A – Riprap Gradation Requirements

Riprap Type	Stone Size D_{50} (Inches)	Typical Stone Dimensions (Inches)	Percent of Material Smaller than Typical Stone Size by Weight
Type H	18	30 24 18 6	100 50 - 70 35 - 50 2 - 10
Type L	9	15 12 9 3	100 50 -70 35 - 50 2 - 10
Type K	3	5 4 3 2	100 50 -70 35 - 50 2 - 10

2.02 GEOTEXTILE

A. Geotextile material in accordance with Section 32 15 10 – Gravel Surfacing.

B. Place geotextile as shown on drawings.

Add Geombrane section here with same statements as above just revised for geomebrane

PART 3 EXECUTION

3.01 AREAS TO RECEIVE RIPRAP

A. Place riprap to outlines and thicknesses as shown on drawings.

3.02 PLACING

A. Bed riprap on geotextile as shown on drawings.

B. Rock in riprap need not be hand placed or compacted.

C. Begin riprap placement at toe of slope and proceed up slope.

D. Rock drop height, maximum: 1 foot.

E. Dump/drop rocks and smooth by moving rocks into position so material when in place is stable.

F. Place rocks so larger rocks are evenly distributed, and small rock fragments fill spaces:

1. Include rock spalls or gravel in an amount to fill voids in riprap, but not more than an amount to be determined by COR.

G. Before placing riprap, demonstrate that placing technique will not damage geotextile:

1. If demonstration does not show riprap can be installed without damaging geotextile materials, modify riprap placing technique.
2. Possible modifications to placing technique include reducing drop height, installing layer of sacrificial geotextile, or installing gravel cushion.

H. Leave no unreasonably large unfilled spaces within riprap.

END OF SECTION

This page intentionally left blank.

SECTION 32 15 10
GRAVEL SURFACING

PART 1 GENERAL

1.01 MEASUREMENT AND PAYMENT

A. Gravel Surfacing:

1. Measurement: Volume of in-place compacted material to outlines of area covered and to specified thickness.
2. Payment: Cubic yard price offered in the Price Schedule.

1.02 REFERENCE STANDARDS

A. ASTM International (ASTM)

1.	ASTM D4632-15a	Grab Breaking Load and Elongation of Geotextiles
2.	ASTM D4751-21	Determining Apparent Opening Size of a Geotextile
3.	ASTM D6241-14	Static Puncture Strength of Geotextiles and Geotextile-related Products Using a 50 mm Probe

B. New Mexico State Department of Transportation (NMDOT)

4.	NMDOT SS 2021	Standard Specifications for Highway and Bridge Construction

1.03 GENERAL

A. Place gravel surfacing at the following locations:

1. Regulating Tank 3: As shown on drawings.
2. Reach 21 Booster Pumping Plant: As shown on drawings.

1.04 SUBMITTALS

A. Submit in accordance with Section 01 33 00 – Submittals.

B. RSN 32 15 10-1, Gravel Certification:

1. Gravel gradation range with percent passing by weight of respective sieve sizes.
2. Representative 300-lb (150 kg) sample.

C. RSN 32 15 10-2, Geotextile Installation:

1. Manufacturer's recommendation.

D. RSN 32 15 10-3, Geotextile Certification:

1. Geotextile meets specified chemical, physical, and manufacturing requirements.

PART 2 PRODUCTS

2.01 GRAVEL

A. In accordance with NMDOT Standard Specification Section 303 – Base Course.

B. Comply with Table 303.2.1:2 – Type II Base Course Gradation Band of NMDOT SS.

2.02 WATER

A. Required for compacting gravel surfacing.

2.03 GEOTEXTILE

A. 170N non-woven geotextile, manufactured by Mirafi, www.tencate.com; or equal, having the following essential characteristics:

1. Grab Tensile Strength (ASTM D4632): 180 lbs.
2. Elongation (ASTM D4632): 50 percent.
3. Puncture Strength (ASTM D6241): 400 lbs.
4. Apparent Opening Size (ASTM D4751): 70 US Sieve size.

PART 3 EXECUTION

3.01 ACCESS ROAD PREPARATION AND EXCAVATION

A. Clear surface of loose and deleterious material. Ensure top 6 inches of roadbed is free from depressions and soft spots.

B. Excavate limits of cut section to subgrade elevation for width of roadbed or as determined by COR.

C. Excavate in dry conditions.

D. Remove unsuitable or unstable material below finished subgrade.

E. Finish roadbed to smooth and uniform surface.

F. Obtain OGR approval of subgrade prior to placing gravel surfacing.

3.02 GEOTEXTILE

A. As directed at locations shown on drawings.

B. In accordance with manufacturer's recommendations.

C. Do not tear geotextile during placement and compaction of gravel surfacing.

3.03 PLACING AND COMPACTING

A. At locations shown on drawings.

B. Place in layers and compact in accordance with Section 31 23 02 – Compacting Earth Materials.

C. Route hauling equipment uniformly over full width of surface to minimize rutting or uneven compaction.

3.04 DISPOSAL

A. Dispose of excess and unsuitable materials in accordance with Section 31 23 39 – Disposal of ExcavatedMaterials.

END OF SECTION

This page intentionally left blank.

SECTION 32 31 01
FENCE GROUNDING

PART 1 GENERAL

1.01 MEASUREMENT AND PAYMENT

A. Cost:

1. Include cost of fence grounding in prices offered in the Price Schedule for Grounding and Bonding.

1.02 REFERENCE STANDARDS

A. ASTM International (ASTM)

1. ASTM B228-11a(2016) — Concentric-Lay-Stranded Copper-Clad Steel Conductors

B. Institute of Electrical and Electronic Engineers (IEEE)

1. IEEE 837-2014 — Qualifying Permanent Connections Used in Substation Grounding

C. Underwriters Laboratories, Inc. (UL)

1. UL 467-2013 — Grounding and Bonding Equipment

PART 2 PRODUCTS

2.01 MATERIALS

A. General: In accordance with Section 26 05 02 – Basic Electrical Materials and Methods.

B. Ground Cables:

1. Stranded, copper-clad steel in accordance with ASTM B228.
2. Type: 40HS or 40DSA.
3. Bare.
4. Sizes: As indicated on Standard Drawing 40-D-6376.

C. Cable Fittings, Lugs, and Connectors:

1. Type: As indicated on Standard Drawing 40-D-6376.
2. Current-carrying Capacity: Equal to associated cable.
3. Copper alloy containing not more than 4 percent zinc.

4. Bolted solderless or compression type connectors: IEEE 837.

5. Ground connectors that will be direct buried or embedded in concrete: Listed for direct burial use in accordance with requirements of UL 467.

D. Ground Rods:

1. Material: Solid, copper-clad steel.

2. Size: 10-foot, with 3/4-inch diameter, nominal.

3. Conform to UL 467.

2.02 WELDING PROCESS

A. Molds and Weld Material:

1. Heavy-duty type.

2. Use new material from fresh stock.

3. Weld metal and starting material: No significant quantities of hazardous ingredients.

PART 3 EXECUTION

3.01 GENERAL

A. This Section applies to facility fence only and only if facility fence is not presently grounded in areas where fence is crossed by or in the right-of-way of new transmission line alignment.

3.02 INSTALLATION

A. General: In accordance with Section 26 05 02 – Basic Electrical Materials and Methods.

B. As indicated on standard drawing 40-D-6376 except as follows:

1. Grounding cable: Type 40HS, except Type 40DSA may be used for fence fabric weaving.

C. Ground Rods:

1. Drive vertically full length of rod until top of rod is at required depth below established grade elevation.

2. Where solid rock is encountered within 3 feet of established grade elevation:

a. Drill vertical hole of such depth that top of ground rod will be at required depth.

b. Diameter of hole: 1 1/2 times diameter of ground rod.

c. Grout rod in hole.

3. Where solid rock is encountered more than 3 feet below established grade elevation:

   a. Drive rod to refusal at approximately 45 degrees.

   b. Bend top of rod to lie horizontally at required depth.

D. Welding: Install with heavy-duty welding equipment in accordance with manufacturer's instructions:

1. Use Cadweld, Thermoweld, or equivalent process:

   a. Personnel shall be properly trained in use and shall be knowledgeable of and follow manufacturer's safety instructions.

2. COR will witness and test welds.

3.03 REPAIR

A. Repair metal finishes that have been damaged as a result of grounding connections.

END OF SECTION

This page intentionally left blank.

SECTION 32 31 10
CHAIN LINK FENCE

PART 1 GENERAL

1.01 MEASUREMENT AND PAYMENT

A. Chain Link Fence:

1. Measurement: Length of chain link fence.
2. Payment: Linear foot price offered in the Price Schedule.

1.02 REFERENCE STANDARDS

A. ASTM International (ASTM)

1.	ASTM A121-19	Metallic-Coated Carbon Steel Barbed Wire
2.	ASTM A392-11a(2017)	Zinc-Coated Steel Chain-Link Fence Fabric
3.	ASTM A824-01(2017)	Metallic-Coated Steel Marcelled Tension Wire for Use with Chain Link Fence
4.	ASTM C33/C33M-18	Concrete Aggregates
5.	ASTM F567-14a(2019)	Installation of Chain-Link Fence
6.	ASTM F626-14(2019)	Fence Fittings
7.	ASTM F900-11(2017)	Industrial and Commercial Swing Gates

B. Chain Link Fence Manufacturers Institute (CLFMI)

1.	CLFMI PM0610	Product Manual

1.03 SUBMITTALS

A. Submit in accordance with Section 01 33 00 – Submittals.

B. RSN 32 31 10-1, Certification:

1. Manufacturers' certification that fence materials, fittings, and accessories meet specified requirements.
2. Include manufacturers' names and product designations and specified product standards in the certification.

PART 2 PRODUCTS

2.01 CHAIN LINK FABRIC

A. Zinc-Coated Steel Fabric: ASTM A392:

1. Size of mesh: 2-inch.
2. Coat before weaving.
3. Diameter of coated wire: 0.148-inch (No. 9-gauge).
4. Coating weight: Class 1.

2.02 INTERMEDIATE POSTS

A. CLFMI 2445, Type I round pipe.

2.03 TERMINAL POSTS, BRACES, AND RAILS

A. CLFMI 2445, Type I round pipe.

2.04 TENSION WIRE

A. Zinc-coated Steel Marcelled Tension Wire: ASTM A824.

1. Coating: Type II, Class 4.

2.05 BARBED WIRE

A. Steel Barbed Wire: ASTM A121.

1. Coating: Type Z, Class 3.
2. Design Number: 12-2-4-14R.

2.06 FITTINGS

A. Post and Line Caps, Rail and Brace Ends, Braces, and Bands: ASTM F626, zinc-coated steel or zinc-coated cast iron.

B. Toprail Sleeves, Tension Bars, and Truss Rods: ASTM F626, zinc-coated steel.

C. Tie Wires, Clips, and Bands: ASTM F626:

1. Standard round wire ties:
   a. 9 gage steel.
   b. Zinc coating, minimum: 1.2 oz/ft^2.

D. Barbed wire arms: ASTM F626, Type I.

2.07 GATES

A. Gates: ASTM F900:

1. Double-swing type.
2. Directions of swing: 180 degrees outward opening.

B. Frame: CLFMI 2445, Type I round pipe:

1. Corners:
   a. Welded or heavy fittings.
   b. Rigid and watertight.

C. Fabric: Same type used in fence.

D. Accessories:

1. ASTM F900.
2. Gate hinges, latches, stops, and keepers: Zinc-coated steel or zinc-coated cast iron.

2.08 CONCRETE

A. Manufacture and delivery: In accordance with Section 03 30 00 – Cast-In-Place Concrete.

B. Fine and coarse aggregates: ASTM C33:

1. Coarse aggregate size, maximum: 3/4-inch.

C. Compressive strength at 28-days, minimum: 2,500 lb/in^2.

PART 3 EXECUTION

3.01 INSTALLATION

A. Erect chain-link fence and gates at locations shown on drawings.

B. Install chain link fences of heights shown on drawings.

C. Install fence and gates as shown on drawings, complete with fabric, posts, braces, rails, fittings, accessories, concrete footings, and other materials required for complete installation of the fence and gates.

D. Install chain link fence in accordance with ASTM F567 and CLFMI PM0610, except as shown on the drawing or specified.

E. Terminal Posts:

1. Maximum intervals: 500 feet.
2. At vertical and horizontal changes in alignment equal to or greater than 30 degrees.

F. Undamaged chain link fence fabric removed from existing fence may be used in permanent fence:

1. Reuse of fence posts not allowed.
2. Straighten fabric.
3. Obtain approval of materials to be reused from COR before installation.

3.02 GROUND CONNECTIONS

A. Provide connections for fence in accordance with Section 26 05 20 – Grounding and Bonding.

3.03 REPAIR

A. Repair damage to zinc coatings in accordance with Section 09 96 20 – Coatings.

3.04 TESTING AND ADJUSTING

A. After installation, test and adjust gates for proper operation.

END OF SECTION

SECTION 32 91 60
EROSION CONTROL BLANKET

PART 1 GENERAL

1.01 MEASUREMENT AND PAYMENT

A. Erosion Control Blanket:

1. Measurement: Surface area required to be covered, except no allowance will be made for overlaps, repairs, or waste.
2. Payment: Square yard price offered in the Price Schedule:
   a. Includes:
      1) Erosion Control Blanket Anchors.
      2) Coir Wattles.
      3) Seeding under Erosion Control Blankets in accordance with Section 32 92 20 – Seeding.

1.02 REFERENCES

A. American Association of State Highway and Transportation Officials (AASHTO))

1.	AASHTO T310-19	Standard Method of Test for In-Place Density and Moisture Content of Soil and Soil-Aggregate by Nuclear Methods (Shallow Depth).
2.	AASHTO T99-21	Standard Method of Test for Moisture-Density Relations of Soils Using a 2.5-kg (5.5-lb) Rammer and a 305-mm (12-in.) Drop

B. ASTM International (ASTM)

1.	ASTM D698-12(2021)	Standard Test Methods for Laboratory compaction Characteristics of Soil Using Standard Effort (12,400 ft-lbf/ft^3)

1.03 SUBMITTALS

A. Submit in accordance with Section 01 33 00 – Submittals.

B. RSN 32 91 60-1, Manufacturer's Information:

1. Manufacturer's literature listing specified essential characteristics.
2. Manufacturer's installation instructions.

C. RSN 32 91 60-2, Installation Plan:

1. Describe sequence of placing blanket.

PART 2 PRODUCTS

2.01 SEEDING

A. In accordance with Section 32 92 20 – Seeding.

2.02 EROSION CONTROL BLANKET

A. AEC Curlex® III FibreNet™ erosion control blanket, as manufactured by American Excelsior Company, 850 Avenue H East, Arlington, TX, Telephone: 800-777-7645, or equal, having the following essential characteristics:

1. Machine-assembled mat with 100 percent excelsior wood fiber within two layers of netting stitched to form a three-dimensional matrix:

   a. Netting: Jute or other natural biodegradable fiber.

2. Consistent thickness with aspen or other seed free wood excelsior curled, interlocked, and evenly distributed over entire area of mat.

3. Excelsior color: Sand.

4. Minimum dry unit weight: 15 oz/yd^2.

5. Thread pattern: 4-inch wide by 4-inch long.

6. Fiber Length, for minimum of 80 percent: 6-inches.

B. Supply blanket in protected, rolled mat form.

2.03 EROSION CONTROL BLANKET ANCHORS

A. Biodegradable staples, 6-inch minimum length, as recommended by manufacturer.

2.04 COIR WATTLES

A. BioD-Watl 9, as manufactured by Rolanka International, 155 Andrew Drive, Stockbridge, GA 30281, 770-506-8211; or equal, having the following essential characteristics:

1. 100 percent coconut fiber filler material in cylindrical shaped rolls with 2-inch by 2-inch high strength outer netting made of 60-lbs. strength machine spun bristle coir twines.

2. Unit Weight: 1.5 lb/ft.

3. Density: 3.4 lb/cu ft.

4. Diameter: 9 inch.

5. Length: 15 feet and 20 feet.

PART 3 EXECUTION

3.01 EROSION CONTROL BLANKET INSTALLATION

A. Site Preparation:

1. Compact bank line excavated for pipe trench backfill beneath erosion control blanket bank protection:

   a. Compact to 85 percent of maximum density obtained using AASHTO T99 (Standard Proctor) in accordance with AASHTO T310.

   b. Compact to 85 percent of maximum density obtained using ASTM D698 (Standard Effort).

2. Remove large, sharp objects which include but are not limited to rocks, cut trees, roots, shrubs, glass that may damage erosion control blanket.

3. Grade wash crossing bank slope to the natural topography prior to pipe installation.

4. Seed in accordance with Section 32 92 20 – Seeding just prior to placing erosion control blanket. Seed only under erosion control blanket.

B. Erosion Control Blanket:

1. Install erosion control blanket on slopes steeper than 2.5:1, at locations shown on drawings or as directed by COR and in accordance with manufacturer's recommended installation procedures and approved installation plan.

2. At overlaps, shingle upstream matting over downstream matting.

3. Secure topsoil erosion control matting in a 6- by 6-inch anchor trench at top and bottom of berms and at upstream and downstream ends of mats.

4. Before backfilling anchor trenches, pin or staple erosion control blanket into anchor trench with no more than 12-inch spacing as recommended by manufacturer.

5. Outside anchor trench, anchor topsoil erosion control matting with 3 to 4 staples per square yard as recommended by manufacturer.

3.02 COIR WATTLE INSTALLATION

A. Anchoring system must be adequate to seat coir wattle securely in contact with adjacent ground:

1. Place coir wattle at bank toe and at subsequent 12-foot intervals up compacted backfill bank on top of erosion control blanket extending 5-feet beyond disturbed area.

2. Minimum 2-foot overlap between adjoining wattles.

3. Pair of wood construction stakes should crisscross through coir roll as shown on drawings, minimum every 2-feet.

B. To form a continuous unit, coir wattles must be tied together end-to-end:

1. Use strong synthetic rope to stitch ends together, with knots tied at frequent intervals to ensure reliable connection.

2. Alternatively, ensure ends of rolls overlap by a minimum of 1 foot, using two wooden stakes at all roll ends and joints.

3.03 REPAIR

A. Repair or replace damaged during installation topsoil erosion control matting at Contractor's expense.

END OF SECTION

SECTION 32 92 20
SEEDING

PART 1 GENERAL

1.01 MEASUREMENT AND PAYMENT

A. Seeding:

1. Measurement: Area of surface disturbance seeded, or as determined by COR.
2. Payment: Acre price offered in the Price Schedule.

1.02 DEFINITIONS

A. Pure live seed content: Weight of seed times percent purity times percent germination.

1.03 SUBMITTALS

A. Submit in accordance with Section 01 33 00 – Submittals.

B. RSN 32 92 20-1, Seeding Plan:

1. Method and equipment used for seeding.
2. Date for seeding.
3. Mulch type and application equipment.
4. Qualifying experience of person responsible for supervision of seeding, and approval.
5. Names, addresses, and telephone numbers of references.
6. Name and address of seed suppliers.

C. RSN 32 92 20-2, Certifications:

1. Origin of seed.
2. Percent purity and germination.
3. Prohibited and restricted weed seed content.

1.04 DELIVERY STORAGE AND HANDLING

A. Seed Containers:

1. Sealed.
2. Labeled:
   a. Identify seed origin on label.

1) Intrastate shipping: In accordance with New Mexico State Seed Laws and Regulations.

2) Interstate shipping: In accordance with U.S. Department of Agriculture Rules and Regulations under the Federal Seed Act.

1.05 AMBIENT CONDITIONS

A. Do not seed when ambient temperature is below 38 degrees F without approval of COR.

B. Do not seed when ground is snow covered or frozen.

C. Do not seed, mulch, or hydroseed when wind velocities prevent uniform application of materials or would drift materials.

PART 2 PRODUCTS

2.01 SEED

A. Weed seeds classified by State Seed Department:

1. Prohibited noxious weeds: None allowed.
2. Restricted noxious weeds: 0.5 percent maximum, by weight.

B. Seed Mixture:

1. Purity, minimum: 85 percent.
2. Germination, minimum: 85 percent.
   a. Germination test: Less than 1-year old at time of seeding.
3. Uniform mixture shown in Table 32 92 20A – Seed Mixture.

Table 32 92 20A – Seed Mixture

Common Name	Scientific Name	Cultivar	Seeding Rate (Pounds pure live seed per acre)
Sterile triticale	Triticum aestivum X Secale cereale 'Quickguard'	VNS	2.0
Fourwing saltbush	Atriplex canescens	VNS	3.0
Winterfat	Krascheninnikovia lanata	VNS	2.0
Indian ricegrass	Achnatherum hymenoides	Paloma or Rimrock	3.0
Western wheatgrass	Pascopyrum smithii	Arriba	2.0
Galleta	Pleuraphis jamesii	Viva or Florets	2.0
Purple threeawn	Aristida purpurea	VNS	2.0

Sand dropseed	Sporobolus cryptandrus	VNS	0.25
Alkali sacaton	Sporobolus airoides	VNS	0.25
Scarlet globemallow	Sphaeralcea coccinea	VNS	0.25
Narrowleaf penstemon	Penstemon angustifolius	VNS	0.25
Rocky Mountain beeplant	Cleome serrulata	VNS	0.25
Hairy false goldenaster	Heterotheca villosa	VNS	0.25

2.02 STRAW MULCH

A. Wheat or barley straw.

B. Free of mold or other evidence of decomposition.

C. Free from weed seed.

2.03 HYDROMULCH

A. Mat-Fiber Plus, manufactured by Mat Inc.,12402 Hwy 2, Floodwood, MN 55736, 1 888 477-3028; Spray Mulch X-80 manufactured by Pacific Wood Fibers, PO Box 2109, Redmond WA 98052; or equal, having the following essential characteristics:

1. Wood cellulose fiber.
2. No germination or growth inhibiting factors.
3. Dyed appropriate color to allow visual metering of application.
4. Evenly dispersed and suspended when agitated in water.
5. Forms blotter like ground cover that readily absorbs water and allows infiltration to underlying soil.

2.04 TACKIFIER

A. Mixture of at least three specially blended compatible hydrocolloids:

1. One hydrocolloid will act as a slippery agent during suspension.
2. Will form loose, long-chain-like film on drying.
3. No growth or germination inhibiting factors.
4. Hydrates and disperses in circulating water to form homogeneous slurry.
5. Equilibrium air dry moisture content at time of manufacture of 8 percent, plus or minus 2 percent.
6. Minimum water holding capacity: 6 1/2 times weight of dry material.

PART 3 EXECUTION

3.01 SEEDBED PREPARATION

A. Complete prior to seeding and mulching or hydromulching.

B. Rip, till, disk compacted areas to create suitable medium for reseeding prior to spreading topsoil.

C. Respread topsoil and scarify or harrow and rake topsoil to minimum depth of 3 inches.

D. Remove stiff clods, lumps, roots, litter, stones, and other foreign material greater than 6-inches in size from surface. Dispose of removed materials in accordance with Section 01 74 00 – Cleaning and Waste Management.

E. Fill or smooth topsoil surface to remove rills, gullies, and depressions.

F. Protect prepared topsoil surfaces from erosion and washouts. Repair damaged surfaces as required.

3.02 SEEDING APPLICATION

A. Seeding in Project Areas:

1. Apply seed and mulch by one of the following methods:
   a. Broadcast seeding followed by mulching or hydromulching.
   b. Drill seeding followed by mulching or hydromulching.
   c. Hydroseeding.
2. Apply seed mixture at rate specified in applicable Table 32 92 20A – Seed Mixture. Double rate of seed application if broadcast seeding.
3. Seed between July 15 and November 15.

B. Seeding Under Erosion Control Blanket:

1. Prior to placing erosion control blankets apply seed mixture at rate specified in Table 32 92 20A. Double rate of seed application if broadcast seeding.
2. Seed between July 15 and November 15.

3.03 BROADCAST SEEDING

A. Broadcast seed only in areas not accessible for drilling or hydroseeding.

B. Mechanical Broadcasting:

1. Equipment:
   a. Centrifugal type.

2. Designed and regulated to apply seed uniformly at proper rate per acre.

C. Hand Broadcasting:

1. By hand broadcaster.
2. By hand.
3. Uniformly applied.

D. Cover seed with soil to depth of 1/4-inch to 1/2-inch immediately after broadcasting:

1. Use hand rake or float.
2. Do not use log chain or similar devices.

3.04 DRILLING SEED

A. Drill:

1. Disc-type seed drill.
2. Space rows 1 foot or less apart.
3. Perform on contour, perpendicular to slopes to minimize runoff, rilling, and erosion.

B. Regulate drill to uniformly distribute seed at rate specified in Table 32 92 20A – Seed Mixture and at proper seed depth:

1. Smaller seed depth: 1/4 to 1/2 inch.
2. Larger seed depth: 1 to 2 inches.

3.05 MULCHING

A. Certified weed-free straw or native grass hay.

B. Spread and crimp within 24 hours of seeding.

C. Rate: 1 to 2 tons/acre uniformly spread.

D. Anchor with threader.

1. Operate crosswise to slope.
2. Depth: 3 to 4 inches.
3. Interval: 6 to 12 inches across slope.

3.06 HYDROSEEDING AND HYDROMULCHING

A. Slurry:

1. Mix to keep homogenous.
2. Ingredients.

a. Water.

b. Tackifier.

c. Seed.

d. Wood cellulose fiber mulch:

1) Rate: 4,000 pounds per acre at 10 percent moisture content.

2) Add to water slurry after seed.

3. Maximum time between batching slurry and application: 1 hour.

B. Spray apply slurry mix uniformly.

C. Use mulch coloring as metering agent.

END OF SECTION

SECTION 33 11 13
PIPELINE DISINFECTION

PART 1 GENERAL

1.01 MEASUREMENT AND PAYMENT

A. Pipeline Disinfection:

1. Payment: Lump sum price offered in the Price Schedule.

B. Cost:

1. Include the cost of disinfecting booster pump station and pipes in prices offered in the Price Schedule for items of work requiring disinfection.

1.02 REFERENCE STANDARDS

A. American Water Works Association (AWWA):

1.	AWWA B300-24	Hypochlorites
2.	AWWA B301-24	Liquid Chlorine
3.	AWWA B302-23	Ammonium Sulfate.
4.	AWWA B303-24	Sodium Chlorite.
5.	AWWA C651-23	Disinfecting Water Mains.
6.	AWWA C655-18	Field Dechlorination

B. National Sanitation Foundation International / American National Standards Institute (NSF/ANSI)

1.	NSF/ANSI 60-24	Drinking Water System Components - Health Effects

C. New Mexico Administrative Code (NMAC) - Title 20, Chapter 7, Part 10:

1. Section 201: Application for Public Water System Project Approval.
2. Section 400: General Operating Requirements.

1.03 SUBMITTALS

A. Submit the following in accordance with Section 01 33 00 – Submittals:

B. RSN 33 11 13-1, Flushing, Disinfection and Verification Plan

1. Identify required permits and approvals.
2. Initial Flushing

a. Plan, procedures, and schedule.

b. Include flushing locations and water source.

3. Disinfection.

a. Plan, procedures, and schedule.

b. Include sample locations, water source, disinfectant type and form, disinfectant dose, disinfectant disposal, and show disinfectant compliance with required standards.

c. Certifies that disinfectant chemicals comply with AWWA C651 and applicable referenced standards in AWWA 651 (e.g. NSF/ANSI/CAN 60)

4. Final Flushing.

a. Plan, procedures, and schedule.

b. Include flushing locations and water source.

5. Verification

a. Plan, procedures, and schedule.

b. Identify testing company certifications/qualifications to perform bacteriological testing.

C. RSN 33 11 13-2, Flushing and Disinfection Report:

1. Initial Flushing

a. Name of field person in charge of initial flushing.

b. Time and date for start and completion.

c. Flow rate and velocity achieved.

2. Disinfection

a. Type and form of disinfectant used.

b. Name of field person in charge of disinfection and sampling.

c. Date and time for disinfection start and completion.

d. Sample location names identified on drawing or map.

e. Table with the following for each sample location:

1) Location name.

2) Date and time of sample.

3) Free chlorine residual concentration at initial and final times.

3. Final Flushing

a. Free chlorine concentrations at feed and discharge locations.

D. RSN 33 11 13-3, Bacteriological Report:

1. Name of person collecting samples.
2. Sample location names identified on drawing or map.
3. Table with the following for each sample location:
    a. Location name.
    b. Date and time of sample.
    c. Free chlorine residual concentration at initial and final times.
    d. Coliform bacteria test results.
    e. HPC bacteria test results.
    f. Certify water meets or does not meet bacterial test requirements.
4. Testing laboratory: name, address, and telephone number.
5. Testing laboratory reports attached.
6. Water Quality Certificate: Certifying that the water conforms to quality standards of the authority having jurisdiction, suitable for human consumption.

1.04 QUALIFICATIONS

A. Testing Company: Specializing in testing potable water systems, certified by State of New Mexico.

PART 2 PRODUCTS

2.01 Not Used

PART 3 EXECUTION

3.01 EXAMINATION

A. Verify existing conditions before starting work.

B. Verify pipe and associated equipment has been cleaned.

3.02 INSTALLATION

A. Authority Having Jurisdiction (AHJ) (e.g. NMED)
    1. Work shall be performed in accordance with AHJ requirements.
    2. Obtain AHJ approvals and permits before commencing each activity.

B. Communication and Scheduling.

1. Prior to commencing flushing and disinfection and during flushing and disinfection, coordinate with COR, NTUA, and water distribution system operators.
2. Ensure work is coordinated with commissioning, startup and ongoing operations activities along with ongoing distribution system operations.
3. Assume daily coordination meetings one week prior to Initial Flushing.

C. Initial Flushing.

1. Obtain and use potable water for flushing.
2. Minimum velocity in accordance with AWWA C651 (e.g., 3.0 ft/s).

D. Disinfection.

1. Prior to Disinfection, complete Initial Flushing.
2. Obtain and use potable water for disinfection.
3. Disinfectant chemicals shall comply with AWWA C651 and applicable referenced standards in AWWA 651 (e.g. NSF/ANSI 60).
4. In accordance with AWWA C651
   a. Introduce water into pipeline system including backflow prevention.
   b. Perform disinfection procedures.
   c. Minimum initial free chlorine concentration measurable throughout system.
   d. Operate valves and hydrants to ensure these are disinfected.

E. Final Flushing.

1. Obtain and use potable water for flushing.
2. Flush system as soon as possible after the completion of disinfection.
3. Dechlorinate and discharge water in accordance with AWWA 655.
4. Confirm the system if fully flushed by either:
   a. Measuring feed and discharge free chlorine concentrations and ensuring they are the same (within 0.30 mg/L of each other).
   b. Measuring a discharge free chlorine concentration less than 0.4 mg/L.

F. Verification.

1. Bacteriological Testing.
   a. In accordance with AWWA C651.
   b. Coliform and HPC bacteria testing required.
   c. Use the approved testing company.

2. Sampling Locations.
   a. In accordance with AWWA C651.
   b. If sampling location required spacing (e.g. every 1200 ft.) cannot be obtained through existing infrastructure, install testing saddles.
3. Bacteriological Testing Results.
   a. Passing test.
      1) In accordance with AWWA C651.
      2) Meet required chlorine residual at sampling point.
      3) Meet required coliform and HPC bacteria results.

G. Completion
1. Obtain written permission from COR prior to connecting to existing system.
2. Replace permanent system devices removed for disinfection and flushing.
3. If testing saddles installed, plug saddles.

3.03 TEST FAILURE

A. Repeat Disinfection, Final Flushing, and Verification steps if:
1. Water quality testing fails.
2. Water is in pipe for greater than 30 days before the start of operations and potable water flow to customers.

END OF SECTION

This page intentionally left blank.

SECTION 33 11 16
PVC PRESSURE PIPE

PART 1 GENERAL

1.01 MEASUREMENT AND PAYMENT

A. PVC Piping:

1. Payment: Lump-sum prices offered in the Price Schedule.
   a. Includes cost of the following:
      1) Furnishing materials, manufacturing and laying pipe.
      2) Excavation, bedding, embedment, backfill, and compaction.
      3) Filling and testing pipe which includes one pipe volume of water. Additional water is required for flushing and testing.
      4) Repair kits.

1.02 DEFINITIONS

A. Details of PVC piping as shown on drawings:

1. Booster Station site: 1695-D-62366 through 1695-D-62369 and associated reference drawings.
2. Regulating Tank 3B site and tank: 1695-D-62370 through 1695-D-62376 and associated reference drawings.

1.03 REFERENCE STANDARDS

A. American National Standards Institute (ANSI)

1.	ANSI/NSF 61-24	Drinking Water System Components – Health Effects
2.	ANSI/NSF 372-24	Drinking Water System Components – Lead Content

B. American Water Works Association (AWWA)

1.	AWWA C110-21	Ductile-Iron and Gray-Iron Fittings, 3 - 48 in. (76 mm - 1,219 mm), for Water
2.	AWWA C111-23	Rubber-Gasket Joints for Ductile-Iron Pressure Pipe and Fittings
3.	AWWA C605-21	Underground Installation of Polyvinyl Chloride (PVC) and Molecularly Oriented

		Polyvinyl Chloride (PVCO) Pressure Pipe and Fittings
4.	AWWA C900-22	Polyvinyl Chloride (PVC) Pressure Pipe and Fabricated Fittings, 4 in. Through 60 in. (100 mm Through 1500 mm)

1.04 SUBMITTALS

A. Submit the following in accordance with Section 01 33 00 – Submittals.

B. RSN 33 11 16-1, Shop drawings:

1. Show fitting fabrication details.
   a. Include lengths of pipe, joint type and overlap lengths, restrained lengths and details, inside pipe diameters, dimension ratios, and fitting details (angles, leg lengths).
2. Dimensions of joints, diameter of rubber gasket including tolerances, other major dimensions, proposed restraint, and location.
3. Commercial product data including catalog illustrations, sizes, material, pressure ratings, manufacturer’s installation instructions.

C. RSN 33 11 16-2, Certification:

1. Manufacturer's certification that raw materials and pipe meet specification requirements.
2. NSF 61 certification for Items in PART 2.

D. RSN 33 11 16-3, Field Quality Test Procedure:

1. Written procedure for leak testing

E. RSN 33 11 16-4, Field Quality Test Results:

1. Results of leak testing.

1.05 QUALIFICATIONS

A. All PVC pipe and fittings: From single manufacturer, fully experienced, reputable, and qualified in manufacture of pipe and fittings to be furnished.

B. Design, construct and install pipe and fittings in accordance with best practices and methods and in compliance with these Specifications.

C. Pipe laying workers: Skilled and experienced in laying pipe with type of joint being furnished.

1.06 DELIVERY, STORAGE, AND HANDLING

A. Prevent damage to pipe during loading, transporting, unloading, storing, and laying.

B. Transport pipe and coated fittings with padded bolsters. Use heavy padding under ties.

C. Provide sun protection for PVC pipe that is stored outside longer than 6 months.

1. At a minimum, wrap pipe in an adequately fastened opaque covering.

a. In warm climates, allow air circulation through and around the pipe by puncturing or cutting the covering in the area of the pipe ends.

D. Support and store pipe above ground surface. Do not allow bells and spigots to contact each other or the ground.

E. Replace pipe that is damaged, sunburned, or discolored during shipment, storage, or installation, at the Contractor's expense.

F. Do not store directly on the ground.

PART 2 PRODUCTS

2.01 GENERAL

A. NSF/ANSI 61 certified.

B. NSF/ANSI 372 certified lead-free.

C. Suitable for potable water.

D. Materials suitable for free chlorine residual exposure:

1. Typical free chlorine residual concentration: Maximum 4 milligrams per liter (mg/l).

E. Pipe and fitting dimensions: Based on iron pipe size (IPS) unless otherwise specified.

2.02 PIPE

A. PVC Pressure Pipe: AWWA C900, elastomeric joint only.

1. Nominal laying length: 20 feet.

2. Minimum pressure rating of pipe: as noted on drawings.

B. Rubber gaskets: Manufactured and tested in accordance with AWWA C900.

2.03 FITTINGS

A. Fittings: as shown on the drawings.

B. Ductile iron fittings:

1. AWWA C110 and C111.
2. Ends: C111 mechanical joint connection with bell ends.
3. Coatings and Linings: In accordance with Section 09 96 20 – Coatings.
4. Joints between steel and PVC pressure pipe: See Section 35 21 95 - Steel Piping.

C. Tapping Sleeves:

1. Style FTS420 manufactured by Romac Industries, Inc., www.romac.com, or equal, having the following essential characteristics.
   a. Minimum 150 psi working pressure rating.
   b. Suitable for hot tapping PVC pipe.
   c. Provide flanged outlet as shown on drawings.

D. Service Saddles:

1. Style 202NS manufactured by Romac Industries, Inc., www.romac.com, or equal, having the following essential characteristics.
   a. DI body
   b. Stainless steel straps.
   c. Minimum 150 psi working pressure rating.
   d. Suitable for connection with PVC pipe.
   e. Provide threaded outlet as shown on drawings.

E. Restrained flange adapters: See Section 35 22 14 - Valves and Equipment.

F. Mechanical joint restraints: See Section 35 22 14 - Valves and Equipment.

2.04 CONTRACTOR SOURCE QUALITY TESTING

A. PVC Pipe:

1. In accordance with AWWA C900.
2. Tests may be witnessed by Government.
3. Notify COR 30-days prior to testing.

2.05 SOURCE QUALITY ASSURANCE

A. Approval for Shipment:

1. Pipe approval will be determined by inspection, during and after manufacture, to determine whether pipe conforms to these specifications and AWWA C900.

2. The Government will inspect pipe units and will approve for shipment those which have been manufactured and tested in accordance with these specifications, unless the Contractor is notified in writing.

3. Further inspection of pipe units will be in accordance with the clause at FAR 52.246-12 "Inspection of Construction."

PART 3 EXECUTION

3.01 REMOVAL

A. Inspect existing PVC pipe and fittings.

B. Notify Government prior to commencing work.

C. Equipment removal, salvage, and demolition of PVC pipe and fittings in accordance with:

1. Removal: 02 41 10 – Selective Site Demolition
2. Disposal: Section 01 74 00 - Cleaning and Waste Management.

3.02 INSTALLATION

A. Keep pipe trenches free of water during pipelaying operations.

B. Excavate pipe trench in accordance with Section 31 23 22 - Pipe Trench Earthwork.

1. Grade pipe trenches to provide uniform slope along bottom of pipe.
2. At joints involving bells or collars, provide holes at joint of ample size to prevent bells or collars from coming in contact with subgrade.
3. Lower pipe into the trench and place pipe in position such that no soil gets inside the pipe and pipe is not damaged.

C. Before assembling pipe joints:

1. Clean gasket, bell or coupling interior, especially the groove, except when the gasket is permanently installed, and the spigot with a rag, brush, or paper towel to remove any dirt or foreign material.
2. When gaskets are separate, use only gaskets which are designed for and supplied with the pipe, and insert the gaskets as recommended by the manufacturer.
3. Apply lubricant as specified by pipe manufacturer:
   a. Use only lubricant supplied by the pipe manufacturer.
   b. Lubricate spigot end of pipe as recommended by the manufacturer.
   c. Do not lubricate either the gasket or the gasket groove in bells where gaskets are field installed.

d. Lubricate factory-installed, nonremovable-type gaskets only if recommended by the pipe manufacturer.

D. Joining Pipe:

1. Join pipe in accordance with AWWA C605.
2. Align spigot to bell, and insert spigot into bell until spigot contacts gasket uniformly.
3. Apply firm, steady pressure either by hand or by using bar and block until spigot easily slips through gasket.
   a. Mechanical equipment such as come-alongs may also be used to join pipe.
   b. Do not use powered equipment, such as excavator or backhoe, to join pipe.
   c. Do not damage pipe during joint assembly.
4. Push spigot until reference mark on spigot end is flush with bell end.
   a. Spigot end of pipe: Marked by manufacturer to indicate proper depth of insertion.
5. Do not swing or "stab" the joint and do not suspend the pipe and swing it into the bell.
6. After pipe units have been joined, insert a feeler gauge between coupling or bell and pipe spigots and move it around the periphery of the pipe to determine that position of rubber gaskets is correct and there are no fish-mouth problems.
7. If adjustment of the position of a length of pipe is required after installation, remove and relay the length of pipe as for a new pipe.

E. After pipelaying and joining operations are completed, clean inside of pipe and remove debris. When pipelaying is not in progress, keep ends of pipelines closed.

3.03 CONTRACTOR FIELD QUALITY TESTING

A. Areas to be leak tested:

1. New pipe installed at the booster plant site as shown on drawings 1695-D-62366 through 1695-D-62367.
   a. Pipe upstream and downstream of the booster plant may be tested separately.
2. New pipe installed at the Regulating Tank 3B site as shown on drawings 1695-D-62370 through 1695-D-62374.
   a. Tank 3B overflow and Tank 3B drain pipe does not need to be leak tested.

B. Leak testing pipe and fittings:

1. Furnish testing equipment approved by COR which provides observable, recordable, and accurate measurements of leakage under specified conditions.
2. Do not start testing when snow or standing water is on the ground. Suspend testing if precipitation accumulates on the ground.
3. Expel air from piping system during filling.
4. Test pressure: 120 psig.
5. Apply and maintain specified test pressure with hydraulic force pump. Valve off piping system when test pressure is reached.
6. Maintain pressure for 24 hours before starting leakage measurement.
7. Maximum allowable leakage: None, as measured by pressure drop.
8. If criteria are not met, repair or replace pipe or fitting and repeat test until acceptance criteria is achieved.

END OF SECTION

This page intentionally left blank.

SECTION 33 11 18
HDPE PRESSURE PIPE

PART 1 GENERAL

1.01 MEASUREMENT AND PAYMENT

A. HDPE Piping:

1. Payment: Lump-sum price offered in the Price Schedule.
   a. Includes cost of the following:
      1) Furnishing materials, manufacturing and laying pipe.
      2) Excavation, bedding, embedment, backfill, and compaction.
      3) Repair kits.

1.02 DEFINITIONS

A. Details of HDPE piping as shown on drawings:

1. Booster Station site: 1695-D-62366 through 1695-D-62369 and associated reference drawings.

1.03 REFERENCE STANDARDS

A. American National Standards Institute (ANSI)

1.	ANSI/NSF 61-24	Drinking Water System Components – Health Effects
2.	ANSI/NSF 372-24	Drinking Water System Components – Lead Content

B. ASTM International (ASTM):

1.	ASTM D3350-24	Polyethylene Plastics Pipe and Fittings Materials
2.	ASTM F1055-22	Electrofusion Type Polyethylene Fittings for Outside Diameter Controlled Polyethylene and Crosslinked Polyethylene (PEX) Pipe and Tubing
3.	ASTM F1290-19	Electrofusion Joining Polyolefin Pipe and Fittings
4.	ASTM F2206-19(2024)	Fabricated Fittings of Butt-Fused Polyethylene (PE)

5.	ASTM F2620-24	Heat Fusion Joining of Polyethylene Pipe and Fittings
6.	ASTM F714-24	Polyethylene (PE) Plastic Pipe (DR-PR) Based on Outside Diameter

C. American Water Works Association (AWWA):

1.	AWWA C906-21	Polyethylene (PE) Pressure Pipe and Fittings, 4 in. (100mm) Through 63 in. (1,575 mm), For Water Distribution and Transmission

D. Plastic Pipe Institute (PPI)

1.	TR-33-2012	Generic Butt Fusion Joint Procedure for Field Joint of PE Pipe
2.	TN-43 2020	PE Compound Categorization for Potable Water Applications
3.	TN-44 2022	Long Term Resistance of AWWA C906 Polyethylene (PE) Pipe to Potable Water Disinfectants

1.04 SUBMITTALS

A. Submit the following in accordance with Section 01 33 00 – Submittals.

B. RSN 33 11 18-1, Shop Drawings and Certifications:

1. Show pipe and fitting fabrication details such as dimensions and location which includes stations and elevations.
2. Manufacturer's certification that raw materials and pipe meet specification requirements and AWWA C906.
3. Product data for electrofusion couplings if used.
4. NSF 61 certification of items in PART 2.
5. Test reports correlated to shipping bills.

C. RSN 33 11 18-2, Fusion Procedures and Qualifications:

1. Submit a detailed plan for demolition and installation of HDPE pipe
   a. Include details of surface preparation of existing pipe for field fusion
2. Indicate whether electrofusion or butt fusion will be used.
3. Fusion temperature.
4. Interface pressure.
5. Cooling time.

6. Record of pipe size and DR being joined and each joints fusion temperature interface pressure and cooling time.
7. Fusion Joint.
8. Operator Qualifications
   a. Certifications from manufacturer.
   b. Inspection results.
   c. Date of Certification.

1.05 QUALIFICATIONS

A. All HDPE pipe and fittings: From single manufacturer, fully experienced, reputable, and qualified in manufacture of HDPE pipe and fittings to be furnished. Minimum 5 years of experience in the manufacturing of HDPE pipe and fittings.

B. Heat Fusion Joint Machine Operator:
   1. Certified by machine manufacturer or representative.
   2. Trained on specific fusion machine and bonding procedure and shall:
      a. Perform one pipe-to-pipe bond and,
      b. One pipe-to-fitting bond on each machine to be used.
   3. Bonds made as part of operator certification: Visually inspected and tested in accordance with PPI and ASTM standards.
   4. Qualification remains in effect for 6-months from date of qualification. Ability to be revoked by certifying entity.

1.06 DELIVERY, STORAGE, AND HANDLING

A. In accordance with Section 01 60 00 – Product Requirements.

B. Prevent damage to pipe and fittings during loading, transporting, unloading, storing, and laying.

C. Transport pipe and fittings with padded bolsters. Use heavy padding under ties.

D. Do not store HDPE pipe in unprotected, outside storage for more than 1 year.

E. Do not store directly on the ground.

PART 2 PRODUCTS

2.01 GENERAL

A. NSF/ANSI 61 certified.

B. NSF/ANSI 372 certified lead-free.

C. Suitable for potable water.

D. Materials suitable for free chlorine residual exposure:

1. Typical free chlorine residual concentration: Maximum 4 milligrams per liter (mg/l).

E. Pipe and fitting dimensions: Based on iron pipe size (IPS) unless otherwise specified.

2.02 PIPE

A. HDPE Pressure Pipe:

1. PE material:

a. AWWA C906.

b. Standard PE code designation: PE 4710.

c. Minimum cell classification, ASTM D3350: PE 445574C, or E.

d. Chlorine resistance classification: CC3. In accordance with TN-43 and TN-44

2.03 FITTINGS

A. HDPE butt fusion fittings:

1. Pressure rated to match pipe pressure rating.

2. Minimum size shall match adjacent pipe.

3. Shop manufactured fittings constructed of HDPE PE 4710 in accordance with AWWA C906, AWWA M55, ASTM F2206 and as shown on drawings.

4. Shop made by heat fusion joining specially machined shapes cut from pipe, polyethylene sheet stock or molded fittings.

5. No Contractor fabricated fittings allowed.

6. Tested in accordance with AWWA C906.

7. HDPE fabricated mechanical adapters: Have stainless-steel stiffeners.

B. HDPE electrofusion fittings:

1. Pressure rated to match pipe pressure rating

2. Minimum size shall match adjacent pipe

3. Shop manufactured fittings constructed of HDPE PE 4710 in accordance with AWWA C906, AWWA M55, ASTM F1055 and as shown on drawings.

4. Tested in accordance with AWWA C906.

C. Metal back-up flange:

1. Stainless steel, Type 316, unless shown otherwise.
2. Pressure rating shall be at a minimum DR 17 or higher to match associated pipe.

D. Restrained flange adapters: Section 35 22 14 - Valves and Equipment.

2.04 CONCRETE

A. Concrete in encasements, blocking and collars: Section 03 30 00 - Cast-in-Place Concrete

2.05 CONTRACTOR SOURCE QUALITY TESTING

A. HDPE Pipe and Fittings:

1. Notify COR 14-calendar days before HDPE pipe and fittings are tested.
2. General: AWWA C906 testing of HDPE pipe and fittings:
   a. Completed and documented by qualified personnel.
   b. Government reserves right to:
      1) Observe testing while in process and to receive testing documentation.
      2) Inspect materials both during and after manufacture.
      3) Testing reports shall have unique identifiers with shipping bills to verify that pieces shipped belong to same as those tested.
3. Test in accordance with AWWA C906:
   a. Perform 1 butt fusion in accordance with ASTM F2620 and PPI Technical Report TR-33 on each run of pipe and from each batch of material feedstock:
      1) Test using a guided side bend test in accordance with ASTM F3183 weekly or after any change in fusion technician or any change in batch of material.
      2) Joints exhibiting yield point lower than unfused pipe or that fails in a brittle mode is considered unacceptable.
      3) Unacceptable test result, Government may reject pipe manufactured in same run and from same batch of material feedstock represented by unacceptable test. Manufacturer may, at own expense, submit additional testing to COR.
   b. Acceptable test results do not:
      1) Mean pipe from pipe run or material feedstock batch shall be acceptable.

2) Relieve pipe manufacturer or supplier from liability for defects in material or workmanship of pipe discovered during installation or warrantee period.

4. HDPE pipe out-of-roundness tolerances shall not exceed maximum allowances in ASTM F714:

a. HDPE pipe ovality: Plus, or minus 5 percent at pipe manufacturing facility.

2.06 SOURCE QUALITY ASSURANCE

A. Approval for Shipment:

1. Pipe approval will be determined by inspection, during and after manufacture, to determine whether pipe conforms to AWWA C906.
2. Notify the COR at least 14 days before manufacturing pipe and 72 hours before shipping pipe.
3. The Government will inspect pipe units and will approve for shipment those which have been manufactured and tested in accordance with these specifications, unless the Contractor is notified otherwise in writing.
4. Further inspection of pipe units will be in accordance with the clause at FAR 52.246-12 "Inspection of Construction."

PART 3 EXECUTION

3.01 REMOVAL

A. Inspect existing HDPE pipe.

B. Notify Government prior to commencing work.

C. Equipment removal, salvage, and demolition of HDPE pipe in accordance with:

1. Removal: 02 41 10 – Demolition
2. Section 01 74 00 - Cleaning and Waste Management.

3.02

3.03 INSTALLATION

A. Install HDPE piping to line and grade as shown on drawings and in accordance with AWWA

1. Install HDPE pipe in accordance with the approved Pipe Installation Procedure submitted under RSN 35 21 95-3.

B. Contact between pipe and rebar will not be allowed.

C. Install pipe spools with flanged connections so that bolt holes straddle vertical centerline when in installed position.

D. Install pipe couplings, gaskets, and other appurtenances in accordance with manufacturer instructions.

E. Excavate pipe trench in accordance with Section 31 23 22 - Pipe Trench Earthwork.

1. Grade pipe trenches to provide uniform slope along bottom of pipe.
2. Lower pipe into the trench and place pipe in position such that no soil gets inside the pipe and pipe is not damaged.
3. Keep pipe trenches free of water during pipelaying operations.

F. Joining Pipe:

1. Butt Fusion:
   a. In accordance with PPI Technical Report TR-33 and ASTM F2620.
      1) Pipe may be joined above ground and then lowered into position, provided pipe is supported and handled in a manner that prevents damage.
   b. To avoid damage, do not join fabricated fittings larger than 16-inch diameter to more than one pipe before placement in trench.
      1) Polyethylene Pipe Fusion Machine Data Loggers:
      2) Used during joint fusions.
      3) Record:
         a) Joint temperature.
         b) Pressure.
         c) Time.
      4) Supply data on fusion joints upon request of COR.
2. Electrofusion:
   a. In accordance with electrofusion manufacturers procedure and ASTM F1290.

G. After pipelaying and joining operations are completed, clean inside of pipe and remove debris. When pipelaying is not in progress, keep ends of pipelines closed.

H. Closure sections:

1. Last fusion joint for HDPE pipe to HDPE pipe closure sections:
   a. Make during the coolest part of the day.
   b. Air temperature, maximum: 65 degrees F.

3.04 CONTRACTOR FIELD QUALITY TESTING

A. Nondestructive testing of field fusion of HDPE pipe:

1.

END OF SECTION

SECTION 33 16 45
WELDED STEEL WATER STORAGE TANK

PART 1 GENERAL

1.01 MEASUREMENT AND PAYMENT

A. Regulating Tank 3B, Welded Steel Water Storage Tank:

1. Payment: Lump sum prices offered in the Price Schedule.

   a. Includes:

      1) Designing and installing welded steel tank, tank foundation, ladders, guardrails, pipes, fittings, and accessories.

      2) Tank and associated equipment.

B. Filling and Testing Tanks:

1. Payment: Lump sum prices offered in the Price Schedule.

   a. Includes: One volume of water per tank used for filling and testing or as approved by COR.

   b. Additional water required for flushing and testing at Contractor's expense.

C. Water Storage Tank Disinfection:

1. Payment: Lump sum prices offered in Price Schedule.

1.02 DEFINITIONS

A. Details of welded steel tank as shown on drawings: 1695-D-62359 and 1695-D-62361 and 1695-D-62374 through 1695-D-62376.

1.03 REFERENCE STANDARDS

A. American Concrete Institute (ACI)

1. ACI 318-19 — Building Code Requirements for Structural Concrete & Commentary

B. American Institute of Steel Construction (AISC)

1. AISC 360-16 — Structural Steel Buildings

C. American National Standards Institute (ANSI)

1. ANSI A14.3-2018 — Ladders – Fixed – Safety Requirements
2. ANSI A1264.1-2017 — Safety Requirements for Workplace Walking/Working Surfaces and Their

		Access; Workplace, Floor, Wall and Roof Openings; Stairs and Guardrail Systems
3.	ANSI/NSF 61-2020	Drinking Water System Components – Heath Effects
4.	ANSI/NSF 372-2020	Drinking Water System Components – Lead Content

D. American Water Works Association (AWWA)

1.	AWWA C200-17	Steel Water Pipe, 6 In. (150 mm) and Larger
2.	AWWA C652-19	Disinfection of Water-Storage Facilities
3.		
4.	AWWA D100-21	Welded Carbon Steel Tanks for Water Storage

E. American Welding Society

1.	AWS D1.1/D1.1M:2020	Structural Welding Code – Steel

F. Code of Federal Regulations (CFR)

1.	29 CFR Part 1910, Subpart D	Occupational Safety and Health Administration (OSHA) Standards – Walking-Working Surfaces

G. Environmental Protection Agency (EPA)

1. How to Conduct a Sanitary Survey of Drinking Water Systems-2019

H. Federal Acquisition Regulations (FAR)

1.	FAR 52.246-21	Warranty of Construction

I. International Code Council (ICC)

1.	IBC-2021	International Building Code

J. National Electrical Manufacturing Association Standards (NEMA)

1.	NEMA 250-2020	Enclosures for Electrical Equipment (1000 Volts Maximum)

K. Telecommunications Industry Association (TIA)

1.	TIA 222-H-2017	Structural Standard for Antenna Supporting Structures And Antennas And Small Wind Turbine Support Structures

1.04 SUBMITTALS

A. Submit the following in accordance with Section 01 33 00 – Submittals.

B. RSN 33 16 45-1, Designer, Erection Engineer and Contractor Qualifications.

C. RSN 33 16 45-2, Commercial Products Data:

1. Items listed in Part 2 Products.
2. Ladders, platforms, guardrails, fall protection system, guard door, and other safety related appurtenances: Include anchorage components, including nuts and washers.
3. Tank vent: Calculations demonstrating sufficient venting capacity for inlet and withdrawal rates.
4. Tank mixer:
   a. Calculations and analysis modeling demonstrating complete tank mixing.
   b. Motor data:
      1) Horsepower rating (horsepower).
      2) Voltage rating (volts).
      3) Full load amps (amperes).
      4) Schematic diagrams:
         a) Show switch controls for mixer.
      5) Wiring diagrams:
         a) Submit actual wiring diagrams for this specific project.

D. RSN 33 16 45-3, Shop Drawings, Calculations and Design Data:

1. Stamped and Signed by a Professional Engineer registered in the State of New Mexico.
2. Checked, detailed shop drawings which include dimensions, tolerances, material data, joint details, and welding requirements.
3. Detailed design drawings of reinforced concrete foundation including:
   a. Concrete foundation layout, elevations, and dimensions.
   b. Typical sections through the ringwall foundation.
   c. Steel reinforcement details and sizes including bar lengths, location of construction joints and lap splices.
   d. Anchor bolt setting plan including size, location and projection of anchor bolts, base mounting details, grout and crushed stone cushion.
4. Checked shop and installation drawings for ladders, platforms, guardrails, fall protection system, guard door, manways, and other safety related appurtenances.

a. Provide a checked box on each drawing indicating the date the drawing was checked and by whom.

5. Detailed manufacturer's instructions for erection of tank, including:

a. Details on bolting.

b. Placement of gaskets and/or sealants.

c. Coating repair procedures.

d. Assembly procedures.

6. In Government Format in accordance with Section 01 33 00 – Submittals:

a. Include the following on shop and installation drawings:

1) Controlling dimensions.

2) Details of component members and connections.

3) Type and grade of material, and type of finish.

b. Plans and elevations.

c. Details and methods of installation and anchoring.

d. Members, sizes and thicknesses, anchorage locations, and accessory items.

e. Field connections shall be clearly marked and noted on shop drawings, indicating size of required fasteners and their locations.

7. Calculations:

a. Stamped and Signed by a Professional Engineer registered in the State of New Mexico.

b. Design calculations for steel tank including design and details of safety features.

c. Detailing design of pipe supports and tank appurtenances.

1) Analysis detailing loading and corresponding stresses on tank appurtenances.

2) Reinforce shell, floor, and roof penetrations to transfer vertical, tangential, and horizontal stresses, seismic load, and incidental differential settlement.

3) Indicated compliance with the design requirements in 1.04, Design Requirements.

d. Design thrust blocks for inlet and outlet piping at the 90-degree bend where the pipes enter the bottom of the tank.

e. Calculations detailing structural design of:

1) Ladders, platforms, guardrails, and other safety related appurtenances.

2) Overflow pipe supports attached to tank and foundation.

3) Overflow weir box design and weir box supports.

4) Riser intake pipe and supports attached to tank wall.

5) Indicate compliance with the design requirements in Article 1.04 Design Requirements.

f. Design calculations for reinforced concrete foundation including:

1) List of loading criteria and values, specific code references and load combinations.

2) Magnitude and direction of steel tank base reactions and anchor bolt loading.

3) Maximum bearing pressures.

E. RSN 33 16 45-4, Tank Disinfection Plan:

1. Submit procedure description including type of disinfectant to and calculations indicating quantities of disinfectants required to produce specified chlorine concentration.

2. In accordance with AWWA C652.

3. Certify products meet or exceed specified requirements.

4. Certify disinfectants meet or exceed AWWA Standards requirements.

F. RSN 33 16 45-5, Inspection Reports:

1. Mill test reports.

2. Inspection reports.

a. Welder performance qualifications.

b. Non-destructive weld test reports.

3. Disinfection Test reports.

a. Indicate results of bacteriological and residual chlorine laboratory test reports.

G. RSN 33 16 45-6, As-Built Drawings, Manuals, and Data:

1. Government Format in accordance with Section 01 33 00 – Submittals.

2. Complete set of As-built drawings:

a. Clearly mark drawings 1695-D-62374 through 1695-D-62376., to show final installation. Include all field modifications.

b. Include drawings for ladders, railing, fall arrest system, guard door, safety gate, and other safety related appurtenances.

c. Submit drawing in accordance with Section 01 78 30 – Project Record Documents.

3. Service Manuals:
   a. Pressure transmitter.
   b. Non-Contacting radar level transmitter.
   c. Tank mixer.
4. Calibration Data and Report:
   a. Submit calibration data and report of findings for the following equipment:
      1) Pressure transmitter.
      2) Non-Contacting radar level transmitter.

1.05 DESIGN REQUIREMENTS

A. General:
1. Meet sanitation guidelines recommended by US EPA Publication - How to Conduct a Sanitary Survey of Drinking Water Systems: Chapter 10 finished water storage facility.
2. Water Storage Tank Gross Volume:
   a. Regulating Tank 3B: 500,000 gallons. 45-foot diameter, 48-foot tall.
3. Design to comply with NSF 61 and NSF 372 requirements.
4. Materials suitable for free chlorine residual exposure:
   a. Typical free chlorine residual concentration in tank: Up to 4 milligrams per liter (mg/l).
5. Refer to drawings for dimensions, elevations, tank venting, pipe penetrations, access hatches, and piping.
6. Account for openings and penetrations through tank elements.
7. Design, furnish, and install pipe supports and brackets attached to the tank.
8. Design to comply with OSHA requirements.
9. Dielectrically isolate dissimilar metals.
10. Design for seismic loading.

B. Design, fabricate, erect, inspect and test a flat-bottom steel tank for potable water storage, including appurtenances, braces, and structural members in accordance with AWWA D100, this section, and as shown on drawings:
1. Wind and earthquake loads: See drawing 1695-D-60822.
2. Provide roof in accordance with this section and drawings:
   a. Structurally supported aluminum dome roof not permitted.
   b. Provide landing or platform for roof access by ladder.

3. Design and provide the diameter and number of anchor bolts required for the tank. Minimum anchor bolt diameter shall be not less than 1 1/4-inches. Provide anchor bolt chairs for the anchor bolts.

4. Furnish and install steel pipe as indicated on drawings, and in accordance with AWWA C200.

5. Furnish and install valves and fittings as indicated on drawings, and in accordance with corresponding standards.

6. Design and construct proper reinforcements for pipe penetrations as shown on drawings.

   a. Do not use modular seals for tank floor penetrations.

   b. All steel piping directly underneath the tank to be encased in concrete.

7. Design and furnish overflow weir and supports in accordance with AWWA D100 and as shown on the drawings.

   a. Overflow pipe diameter shall be as shown on drawings.

   b. Overflow pipe and supports shall accommodate differential settlement.

   c. Designed for maximum loading conditions during overflow operation.

   d. Overflow rate: 9.2 cfs.

8. Tank vent: Size vent for an inlet/withdrawl rate of 9.2 cubic feet per second (cfs).

9. Provide a lockable roof hatch with rubber sealing gasket.

10. Provide a tank name plate including: company name and address, year the tank was constructed, design capacity, diameter, height, base elevation, and overflow elevation.

C. Design and construct a reinforced concrete foundation for a flat-bottom steel tank in accordance with AWWA D100, this section and as shown on drawings:

1. Refer to Sections 53 10 00 – Geological Investigations and 31 23 10 – Earthwork for foundation subgrade conditions.

2. Thick cane-fiber joint filler not permitted.

3. Welded Steel Tank shall have Foundation Type 1 in accordance with AWWA D100 for welded steel tanks.

4. Design foundations with the centroids of superimposed loads at their actual locations.

5. Foundation shall be an on-grade structure. Bearing on subgrade as indicated on the drawings.

6. AWWA D100 welded steel tanks:

   a. Foundation Type 1:

1) Design reinforced concrete ringwall foundation to support the steel tank and collateral loads imposed by equipment, accessories, and overflow piping to be supported by the steel tank in accordance with ACI 318.

2) Provide grouted base ring and clean crushed stone cushion for supporting the steel tank bottom in accordance with AWWA D100 and as recommended by tank manufacturer.

3) Crushed stone cushion resistivity of crushed stone shall be greater than 3,000 ohm-cm when saturated with distilled or deionized water, a chloride content less than 100-ppm, and sulfate content less than 200 ppm. Add hydrated lime may be added to the crushed stone to increase the pH in accordance with AWWA D100.

4) Tank foundation drain to be installed under tank floor. See Drawing 1695-D-60874 through 1695-D-60876.

7. Concrete design and placement in accordance with Section 03 30 00 – Cast-in-Place Concrete.

8. Grout design and placement in accordance with Section 03 63 00 – Epoxy Grout.

D. Ladders:

1. Provide an exterior ladder from bottom of tank shell to roof of tank, including side rails, as indicated on drawings.

2. Ladder to be continuous. Split ladders not allowed.

3. Provide a hinged, lockable, guard gate over bottom of the ladder.

4. Provide lockable hatch with rubber sealing gasket when ladder connects into platform.

5. Provide ladder extensions and flare ladders at platform locations.

6. Provide a fall arrest system on ladder and safety rail extension.

E. Railings:

1. Provide railings surrounding all platforms and on roofs of tanks as indicated on drawings.

2. Provide additional guardrails and/or platforms, if necessary, to access appurtenances installed on the tank roof.

F. Cathodic Protection:

1. See 26 42 15 - Galvanic Anode Cathodic Protection for Welded Steel Tanks.

2. See Drawing 1695-D-62393.

3. Incorporate required fittings or appurtenances for cathodic protection system into tank design.

G. Communications

1. Provide antennas on top of tank for communication with Cutter Lateral Water Treatment Plant and with Prefabricated Pump Station in accordance with Section 26 24 20 – Control Boards.

H. Mixer

1. Tank mixer sized for 45-foot diameter, 48-foot-tall AWWA D100 tank.
   a. Inflow: x cfs to 9.2 cfs.
   b. Outflow: x cfs to x cfs.
2. Furnish and install an additional mixer for existing Regulating Tank 3A.
3. Transmit mixer controller output signals in accordance with Section 26 24 20 – Control Boards and this Section.

1.06 QUALIFICATIONS

A. Tank and Foundation Designer Qualifications: Professional Engineer registered in the State of New Mexico.

B. Erection Engineer:

1. Specializes in construction of applicable tank type selected.
2. Minimum 3-years' experience in the design, fabrication, and erection of water storage tanks using the applicable AWWA, ASME, AWS, ANSI/NSF and OSHA standards

C. Tank and Tank Foundation Designer: Designed at least 5 similar projects:

1. Designer of Tank: Professional Engineer registered in the State of New Mexico, with a minimum of 5-years' experience designing steel tanks.
2. Designer of Tank Foundation: Professional Engineer registered in the State of New Mexico, with a minimum of 5-years' experience designing reinforced concrete foundations.

D. Installer: Installed at least 5 similar tank projects.

E. Manufacturer: Manufactured at least 5 similar tank projects

1. Certified welders in accordance with AWS D1.1 using procedures, materials, and equipment of the type required for work.

F. Contractor: Installed at least 5 water and or waste water tanks of similar size and design.

1.07 WARRANTY

A. Warrant tank for extended period in accordance with the clause at FAR 52.246-21, Warranty of Construction.

PART 2 PRODUCTS

2.01 PIPE, FITTINGS, AND ACCESSORIES

A. Standard and Schedule Steel Pipe:

1. Steel piping, flanges, fittings, No. 24 stainless-steel mesh screen, couplings, gaskets and accessories in accordance with 35 21 95 – Steel Piping and as indicated on drawings.

B. Valves and Equipment:

1. Valves in accordance with 35 22 15 – Valves and Equipment and as indicated on drawings.

C. Internal Pipe Support Brackets:

1. Corrosion resistant materials.
2. Galvanized steel not permitted.

D. Pressure Transmitters: Rosemount Model 3051TG with type 306 manifold in-line pressure transmitter manufactured by Emerson, www.emerson.com; or equal, having the following essential characteristics:

1. Water Tank pressure transmitter shall be suitable for measuring the following pressure ranges: 0 to 330 psig.
2. Output: 4-20 milliamperes DC.
3. Transmitter shall be suitable for operation on 10- to 36-volt DC external power supply.
4. Adjustable offset (zero) and span.
5. Accuracy: Plus, or minus 0.25 percent.
6. In-line manifold (block and bleed) with vent/drain valve.
7. Process connection: 1/2-inch-14 NPT female.
8. Isolating diaphragm: 316L stainless steel.
9. Sensor fill: Silicone oil.
10. Housing: Aluminum with 1/2-inch-14 NPT conduit entry size.
11. Enclosure: Insulated NEMA Type 4X.
12. Transmitter materials in contact with potable water shall be National Sanitation Foundation listed.
13. Liquid Crystal Display with local operator interface shall be provided.
14. Transient protection:
    a. Protects pressure transmitter from damage due to lightning and switching surges.

b. Compatible with pressure transmitter output of 4 to 20 milliamperes.

c. Be of same manufacturer as pressure transmitter.

15. Insulation:

a. Jacket or hot box

E. Ultrasonic Liquid Level Transducer and Transmitter:

1. Transducer and transmitter supplied by the same manufacturer.

2. Transducer: Rosemount Model 5408 manufactured by Emerson, www.emerson.com; or Optiwave 5200 manufactured by Krohne, www.krohne.com; or equal, having the following essential characteristics:

a. Non-contact, ultrasonic level transducer.

b. Measuring range: up to 50 ft, minimum.

c. Temperature range: -20 to 60 degrees C.

d. Relative humidity: 0 to 100 percent.

e. Provide integral temperature sensors for temperature compensation.

f. Housing: Encapsulated in Kynar or other chemical and corrosion-resistant housing.

g. Capable of being completely submerged without damage.

h. Suitable for mounting as indicated on the drawing 1695-D-62376.

i. Provide special heaters or other type of transducer protection designed to prevent sensor icing.

j. Provide signal cable as recommended by the manufacturer.

3. Transmitter: HydroRanger 200 manufactured by Siemens, www.siemens.com; or equal, having the following essential characteristics:

a. Compatible with the transducer(s) provided.

b. Microprocessor based.

c. Resolution (including transducer): Plus or minus 0.1 percent of range or 0.08 inches, whichever is greater.

d. Accuracy (including transducer: Plus or minus 0.25 percent of range.

e. Range: As required by the installation indicated on the Drawings.

f. Temperature range: -20 to 50 degrees C.

g. Output:

1) Minimum one isolated 4-20 mA output and minimum of four alarm contacts (number of additional contacts to be determined by signals required as shown on the drawings).

2) Alarms to be adjustable to trip at any point in the instrument range. Output contacts shall be rated 5 A at 230 VAC.

h. Provide temperature compensation over the temperature range of the sensor.

i. Display: Digital indicator displaying level/differential level or volume in engineering units or percent.

j. Diagnostics: On-screen instructions and display of self-diagnostics.

k. Loss of signal: Transmitter shall ignore momentary loss-of-echo signals and shall indicate loss of echo on the transmitter unit.

l. Configuration protection: Programmable parameters shall be protected using E2PROM. Battery backup protection is not acceptable.

m. Enclosure:

1) Suitable for surface or pipe stand mounting.

2) NEMA 4X/IP65 in accordance with NEMA 250.

n. Provide hand-held programmer where required for calibration and configuration of the instrument.

F. Liquid Level Indicator:

1. Model 92302, as manufactured by Shand & Jurs, 5911 Butterfield Road, Hillside, IL 60162; or equal, having the following essential characteristics:

a. Float-actuated level gauging system consisting of a target sliding vertically over an aluminum gauge board.

b. Gauge board graduated in feet and inches with numerals at each foot with highest reading at ground level.

c. Type 316 stainless steel for float, cable, and guide wires.

d. At least three-gauge board support brackets to match tank material type.

e. True reading pulley system.

G. Secure Roof Vent:

1. Model AST-Vent manufactured by Advance Tank Construction Co., www.advancetank.com or equal, having the following essential characteristics:

a. AWWA D100.

b. Lockable.

c. Tank vent entrance minimum 24 inches above top of tank.

d. Protective replaceable non-corrodible #24 mesh screen to keep out insects.

e. Frost proof.

f. Pressure vacuum or vacuum relief mechanism.

g. Differential pressure across vent shall be within acceptable range as determined by tank manufacturer.

h. Locate near roof center.

i. Minimum of 24-inches above the surface of the tank roof.

j. Designed in accordance with applicable AWWA code for tank type selected.

k. Include a 24-mesh stainless-steel screen to prevent the entrance of birds and other animals.

H. Ladders, Railings and Accessories:

1. All ladders and railings designed for exterior attachment to a tank shall be galvanized steel.

2. All ladders designed for interior attachment to a tank shall be stainless steel.

3. Designed to meet the load requirements as prescribed by 29 CFR Part 1910 Subpart D, ANSI A14.3, and ANSI A1264.1.

4. Designed for dead, live, and any combination of loads thereof, in accordance with the IBC.

5. Designed and fabricated in accordance with the applicable requirements in AISC 360.

6. Fabricate all steel ladders and railings in accordance with Section 05 50 00 – Metal Fabrications.

7. Materials and welding shall conform to all applicable requirements of AISC 360.

8. Ladders:

a. Ladder, including steps and rungs, side rails, and ladder termination in accordance with ANSI A14.3.

b. Provide ladder side rails fabricated out of steel pipe.

c. Metal safety steps for ladders:

1) “Tread-Grip” sheet steel ladder rungs as manufactured by Metalex, 700 Liberty Drive, Libertyville, IL 60048; “Traction Tread” ladder rung as manufactured by Eaton, 509 West Monroe Street, Highland, IL 62249; or equal, having the following essential characteristics:

a) Raised button surface.

b) 1 1/4-inch diameter, or width, spaced 12-inches on center.

c) Concentrated design load at center of rung of at least 250-pounds.

d) Minimum rung length: 18-inches.

e) Deformed concrete reinforcement not permitted.

9. Ladder Guard Door:

a. Minimum of 96-inch tall solid panel.

b. Steel construction.

c. Heavy duty continuous piano hinge to allow cover to easily swing to the side for ladder access.

d. Lockable with a pad lock shackle up to 7/16-inch diameter.

e. Locate locking mechanism 36-inch to 42-inch above top of tank foundation.

10. Ladder Safety Gate:

a. Kee Safety Self-Closing Safety Gate manufactured by Kee Safety Limited, www.keesafety.co.uk or equal, having the following essential characteristics:

1) OSHA compliant.

2) Spring loaded to automatically close behind the user.

3) Material: galvanized steel.

11. Fall Arrest System:

a. Miller Saf-T-Climb as manufactured by Honeywell, 1345 15th St., Franklin, PA 16323; or equal, having following essential characteristics:

1) Round cross section.

2) Allow sleeve to swing completely around when climber reaches the top, to allow the climber to step onto the top of the tank without disconnecting the sleeve.

3) Flat safety rail: Not acceptable.

4) Include mounting brackets, tensioner, termination device, sign, and hardware.

5) Capacity: For single person use; 1400 lbs. rated.

6) Designed and manufactured to meet ANSI A14.3.

7) Cable not permitted.

8) Provide shuttle.

12. Guardrail:

a. Railings in accordance with ANSI 14.3 and ANSI A1264.1.

b. Rails: 1 1/2-inch standard steel pipe or Schedule 80 aluminum 6061-T6 or 6005-T5 anodized aluminum pipe.

c. 3-rail with equally spaced rails and 4-inch-high toe board (kick plate).

d. Minimum height: 42 inches above walking surface.

e. Maximum post spacing: 5 feet.

f. Maximum gap between adjacent guardrail sections: 4 inches.

g. Coordinate guardrail fittings with selected rail material.

h. Post and Rail Tops and Ends: Weather resistant, closed or plugged with prefabricated end fittings.

i. Provide weep holes or other means to drain entrapped water in hollow sections of handrail and guardrail members.

j. Fabricate joints exposed to weather to be watertight.

k. Insulate rail connections from the tank as required to prevent contact with dissimilar metals and/or other tank materials.

I. Roof hatch:

1. Lockable roof hatch with rubber sealing gasket and security hatch position sensor. Hatch to contain counterweight or pneumatic lift assist.

2. Hatch on top of tank shall be a minimum 4-inches above the surface of the tank roof.

J. Tank Mixer:

1. Model number PWM400 tank mixer by PAX Water Technologies, 860 Harbour Way South, Richmond, CA, 94804, or equal, with the following essential characteristics:

a. Install in existing storage tank T-900-100-01 and new storage tank T-900-100-02 for water quality stability, and freeze protection.

b. Solution: treated water with concentrations of free chlorine between 0.2 and 4.0 mg/L as Cl2 and pH between 5 and 10.

c. Material:

1) NSF/ANSI 61.

2) Handle and chain for deployment/removal: 316 SS.

3) Stand: 316 SS.

4) Motor seals: Nitrile butadiene rubber (NBR).

5) Feet: Ethylene propylene diene monomer (EPDM).

6) Control center: Powder-coated carbon steel, NEMA 4X enclosure.

7) Wiring: UL-listed submersible pump cable 14 AWG XLPE.

d. Operation:

1) Completely mixed volume: 0.5 MG.

2) Minimum residence time: 1-hour.

3) Maximum residence time: 72-hours.

4) Automatic shutoff if water level drops below impeller height.

5) Completely mix reservoir. Contained water temperature must converge to 0.8 degree C variance per 24-hour period, or less.

6) Equipment in tank can be installed and retrieved through the tank hatch opening by personnel on tank roof with the tank full and in operation.

7) Equipment lifted by personnel from tank not to exceed 60-pounds.

8) Rated for continuous duty.

9) Impeller elevated a minimum of 18-inches from tank floor.

10) Mixer shall cause no damage to tank or cathodic protection during installation, removal, or operation.

e. System Voltage: 115VAC, single phase, 60 hertz.

f. Combination motor starter:

1) Thermal magnetic circuit breaker and externally operable handle in common enclosure.

2) Voltage: 120 volts

3) NEMA 250 Type 12 lockable enclosure.

4) Ground-Fault Circuit Interrupter (GFCI) Protection.

5) Selector Switch: 2 position On/Off.

6) Indicating Lights: On (Red)/Off (Green)

7) Automatic motor shut-off if tank water level drops below a specified elevation.

8) Communications package suitable for connection to Contractor-supplied PLC at booster site for mixer On/Off Status, Loss of Power Alarm, Unit Fault/Failure.

9) Location: inside existing building at Regulation Tank 3 site.

K. Disinfectants:

1. Chlorine Forms: In accordance with AWWA C652, Section 4.2.

2.02 SOURCE QUALITY ASSURANCE

A. Government retains the right to witness factory inspections.

PART 3 EXECUTION

3.01 SERVICES OF ON-SITE ERECTION ENGINEER

A. Furnish the services of an on-site erection engineer to supervise and be responsible for erecting the storage tank. Have erection engineer onsite during water tank installation and testing.

3.02 INSTALLATION

A. Follow tank manufacturer's erection procedures and approved submittals.

B. Install inlet, outlet, drain, and overflow piping in accordance with drawings 1695-D-62374 through 1695-D-62375, Section 35 21 95 – Steel Piping, and Section 35 22 15 – Valves and Equipment.

C. Welding procedures:

1. In accordance with AWS D1.1 and AWWA D100.
2. Make available, to COR upon request, certification that welds were made by AWS qualified welders and inspected according to AWS standards.
3. Surfaces to be welded shall be free from loose scale, slag, heavy rust, grease, paint, and other foreign material. Make surfaces smooth, uniform, and free from defects that adversely affect proper welding.
4. Clean surfaces and remove weld scale or slag prior to coating.

D. Provide supports and bracing required to hold steel and steel pipe in place. Prevent distortion during erection, placing of concrete, and backfilling.

E. Install pipe, fittings, valves, equipment and accessories according to manufacturer's instructions.

F. Coordinate the work of the erection engineer with COR.

G. Install ladders, platforms, and guardrails in accordance with approved manufacturer's installation drawings.

H. Install and calibrate submersible pressure transmitter and ultrasonic liquid level transducer and transmitter in accordance with manufacturer's recommendations.

1. Route output from pressure transmitter to COR's designated location.
2. Calibration shall be witnessed by Government.
3. Notify COR 14 days prior to calibration.

I. Use template for anchor bolt spacing to verify correct location of anchors. Subject to government approval.

3.03 CONTRACTOR FIELD QUALITY TESTING

A. Hydrostatically test tank in accordance with AWWA D100.

1. Repair leaks in the tank in accordance with manufacturer's recommendations.
2. Notify COR 5-days prior to test.
3. Observe water level drop for a period of 24 hours.

B. Testing of welds:

1. In accordance with AWS D1.1 and AWWA D100.

3.04 SERVICES OF ON-SITE ERECTION ENGINEER

A. Erection engineer shall supervise and be responsible for erecting the steel tank. Erection engineer shall be onsite during installation phases of steel tank.

B. Do not place concrete floor and foundation until subgrade is approved by Erection Engineer.

C. Coordinate work of Erection Engineer with COR.

3.05 DISINFECTION

A. Disinfectants

1. Store disinfectants in cool, dry place away from combustibles such as wood, rags, oils and grease.
2. Handle disinfectants with caution; protect skin and eyes from contact; avoid breathing vapors; wear gloves, aprons, goggles, and vapor masks.

B. Furnish personnel working inside tank during disinfection with equipment to comply with Federal and State regulations for work conducted in hazardous atmosphere.

C. Examination

1. Conduct inspection of tank interior before beginning disinfection.
2. Verify tank is clean and free of polluting materials.
3. Verify tank pipe and vent connections are properly made and clear of obstructions.
4. Verify coating is thoroughly cured in accordance with manufacturer's instructions.

D. Disinfection

1. Prior to Disinfection, complete Examinaiton.
2. Obtain and use potable water for disinfection.

3. Disinfect completed tank in accordance with approved Disinfection Plan and AWWA C652.
4. Use Chlorination Method 2 for disinfecting tank as specified in Section 4.3 of AWWA C652.

E. Final Flushing

1. Obtain and use potable water for flushing.
2. Flush system as soon as possible after the completion of disinfection.
3. Protect aquatic life and vegetation from damage from disinfectant solution purged from tank.
4. Neutralize disinfectant solution before disposal.
5. Legally dispose of disinfection solution off Project site.

F. Verfication

1. Collect samples of water from filled tank for bacteriological analysis in accordance with Section 5.1 of AWWA C652; take inlet and outlet water samples.
   a. Test water samples for bacterial contamination, residual chlorine, in accordance with State Health Standards for potable water.

G. Completion

1. Repair damage caused by disinfectant solution and disinfection procedures.

H. Test Failure

1. Repeat Disinfection, Final Flushing, and Verification steps if:
   a. Water quality testing fails.
   b. Water is in tank for greater than 30 days before the start of operations and potable water flow to customers.
2. If water samples fail to meet State Health Standards for potable water perform the following corrective measures until water quality conforms to State Health Standards:
   a. Inlet and Outlet Water Sample Failure: Eliminate source of contamination in water supply, repeat disinfection, and retest water quality.
   b. Outlet Water Sample Failure: Repeat disinfection, and retest water quality.

3.06 COATINGS

A. In accordance with Section 09 96 20 – Coatings.

END OF SECTION

This page intentionally left blank.

SECTION 35 21 95
STEEL PIPING

PART 1 GENERAL

1.01 MEASUREMENT AND PAYMENT

A. Steel Piping:

1. Payment: Lump-sum prices offered in the Price Schedule.
   a. Includes cost of furnishing materials, manufacturing and laying pipe.
   b. Includes cost for fillng and testing pipe which includes one pipe volume of water. Additional water is required for flushing and testing.
   c. Includes cost of repair kits.

1.02 DEFINITIONS

A. Details of steel piping as shown on drawings:

1. Booster Station site: 1695-D-62366 through 1695-D-62369 and associated reference drawings.
2. Regulating Tank 3B site and tank: 1695-D-62370 through 1695-D-62376 and associated reference drawings.

1.03 REFERENCE STANDARDS

A. American National Standards Institute (ANSI)

1.	ANSI/NSF 61-20	Drinking Water System Components – Health Effects
2.	ANSI/NSF 372-20	Drinking Water System Components – Lead Content

B. American Society of Mechanical Engineers (ASME)

1.	ASME B1.20.1-2013	Pipe Threads, General Purpose (Inch)
2.	ASME B16.9-2018	Factory Made Wrought Buttwelding Fittings
3.	ASME B16.11-2016	Forged Fittings, Socket-Welding and Threaded

C. ASTM International (ASTM)

1.	ASTM A36/A36M-19	Carbon Structural Steel
2.	ASTM A53/A53M-20	Pipe, Steel, Black and Hot-Dipped, Zinc-Coated Welded and Seamless

3.	ASTM A105/A105M-18	Carbon Steel Forgings for Piping Applications
4.	ASTM A139/A139M-16	Electric-Fusion (Arc)-Welded Steel Pipe (NPS 4 and Over)
5.	ASTM A182/A182M-22	Forged or Rolled Alloy and Stainless- Steel Pipe Flanges, Forged Fittings, and Valves and Parts for High-Temperature Service
6.	ASTM A234/A234M-22	Piping Fittings of Wrought Carbon Steel and Alloy Steel for Moderate and High Temperature Service
7.	ASTM A240/A240M-25	Chromium and Chromium-Nickel Stainless Steel Plate, Sheet, and Strip for Pressure Vessels and for General Applications
8.	ASTM A420/A420M-20	Piping Fittings of Wrought Carbon Steel and Alloy Steel for Low Temperature Service
9.	ASTM A1011/A1011M-18	Steel, Sheet and Strip, Hot-Rolled, Carbon, Structural, High-Strength Low-Alloy, High-Strength Low-Alloy with Improved Formability, and Ultra-High Strength Steel
10.	ASTM A1018/A1018M-18	Steel, Sheet and Strip, Heavy-Thickness Coils, Hot-Rolled, Carbon, Commercial, Drawing, Structural, High-Strength Low-Alloy, High-Strength Low-Alloy with Improved Formability, and Ultra-High Strength
11.	ASTM B43-20	Standard Specification for Seamless Red Brass Pipe, Standard Sizes
12.	ASTM B687-99(2023)	Standard Specification for Brass, Copper, and Chromium-Plated Pipe Nipples
13.	ASTM E165/E165M-15	Liquid Penetrant Examination for General Industry
14.	ASTM E709/E709M-15	Guide for Magnetic Particle Testing

D. American Welding Society (AWS)

1.	AWS D1.1/D1.1M:2020	Structural Welding Code - Steel

E. American Water Works Association (AWWA)

1.	AWWA C200-17	Steel Water Pipe - 6 In (150 mm) and Larger
2.	AWWA C206-17	Field Welding of Steel Water Pipe

3.	AWWA C207-18	Steel Pipe Flanges for Waterworks Service, Sizes 4 In. through 144 In. (100 mm Through 3,600 mm)
4.	AWWA C227-17	Bolted, Split-Sleeve Couplings
5.	AWWA C604-17	Installation of Buried Steel Water Pipe – 4 In. (100 mm) and Larger
6.	AWWA C606-15	Grooved and Shouldered Joints

F. Commercial Item Descriptions (CID)

1.	CID-A-A-1923A-01	Shield Expansion (Lag, Machine and Externally Threaded Wedge Bolt Anchors)

1.04 SUBMITTALS

A. Submit the following in accordance with Section 01 33 00 – Submittals.

B. RSN 35 21 95-1, Shop Drawings:

1. Checked, detailed shop drawings including dimensions and tolerances, material data, joint details, and welding requirements:
   a. Provide checked box on each drawing indicating date drawing was checked and by whom.
   b. When revised drawings and data are resubmitted, clearly identify changes from previous submittals.

C. RSN 35 21 95-2, Commercial Products Data:

1. All products listed in PART 2, PRODUCTS.

D. RSN 35 21 95-3, Pipe Installation Procedure:

1. Methods for maintaining circularity and preventing damage to steel pipe, fittings, lining and coating during loading, transporting, unloading, storing, and laying.
2. Type and location of pipe supports and tie downs to be used.
3. Methods for ensuring pipe alignment.
4. Type, locations, and details of field welds.
5. Installation procedure, including installation of the steel drain and overflow piping through the cement-bentonite cutoff wall.
   a. Include method of removing cement-bentonite cutoff wall.
   b. Include method of backfilling and sealing penetration through cement-bentonite cutoff wall.
6. Submit the required information for all pipe types:
   a. Steel pipe in accordance with 35 21 95 Steel Piping

b. PVC pipe in accordance with 33 11 16 PVC Pressure Pipe

c. HDPE pipe in accordance with 33 11 18 HDPE Pressure Pipe

E. RSN 35 21 95-4, Source Quality Test Reports:

1. Provide hydrostatic test procedure, including time-pressure record.

2. Report detailing results of hydrostatic testing including time pressure record of each hydrostatic test.

F. RSN 35 21 95-5, Field Quality Test Results:

1. Results of air and soap tests on field welded double lap and butt strap joints.

2. Results of field pressure testing

G. RSN 35 21 95-6, Final Drawings:

1. Complete set of As-Built drawings

a. Clearly mark drawings to show all field modifications of the final installation.

1) Booster Station site: drawings 1695-D-62366 through 1695-D-62369.

2) Regulating Tank 3B site: drawings 1695-D-62370 through 1695-D-62386.

b. Submit drawings in accordance with Section 01 33 00 – Submittals and Section 01 78 30 –Project Record Documents.

2. Submit drawings showing field modifications for all piping, including PVC and HDPE.

1.05 QUALIFICATIONS

A. Pipe Installers: Installed similar manifold on 3 projects within the last 5 years.

B. Steel Pipe Welders: Welders and Welding Operators qualified in accordance with AWS D1.1.

1.06 DELIVERY, STORAGE, AND HANDLING

A. During loading, transporting, unloading, storing, and laying, prevent damage to steel piping linings and coating. Transport and handle in accordance with fabricator's instructions:

1. Provide padded bolsters curved to fit under outside of pipe.

2. Provide heavy padding under ties during transportation and storage.

B. Maintain circularity of pipe sections during coating, lining, transporting, and installing operations:

1. Provide stulls or adjustable spiders.
2. Measured deviation between maximum and minimum diameters at stulls or spiders shall not exceed 0.5 percent of nominal pipe diameter.

C. Do not store directly on the ground.

D. Store so that lifting straps can be passed beneath pipe sections.

E. Provide space to allow personnel to move between pipe sections.

F. Cover with tarps and tie down securely.

G. Repair damage to lining and coating as directed if, in the opinion of COR, a satisfactory repair can be made; otherwise, replace damaged section at the expense of the Contractor and in accordance with Section 09 96 20 – Coatings.

PART 2 PRODUCTS

2.01 EQUIPMENT

A. Piping and equipment materials:

1. ANSI/NSF 61 certified.
2. ANSI/NSF 372 certified lead-free.
3. Suitable for potable water.
4. Materials suitable for free chlorine residual exposure.
   a. Typical free chlorine residual concentration: Maximum 4 milligrams per liter (mg/l).

B. Steel plate:

1. ASTM A36, ASTM A1011, Grade 36, 40, or 45; or ASTM A1018, Grade 36 or 40.

C. Standard and schedule steel pipe:

1. ASTM A53, Type E or S, Grade B:
   a. In accordance with Section 09 96 20 – Coatings.

D. Electric–fusion– (arc–) welded, spiral–seam steel pipe:

1. ASTM A139, Grade C, D, or E.

E. Stainless-steel plate:

1. ASTM A240, Type 304 or 316.

F. Stainless Steel Mesh:

1. Size: No. 24 mesh
2. ASTM A240, Type 304 or 316

G. Flanges:

1. Steel: Slip-on ring type.
2. Flat faced: AWWA C207.
3. Flat face with finish suitable for gasket:
   a. Provide spiral or concentric serrated grooved flange face gasket surface finishes that are suitable for the flat gasket material provided and for the operating pressures.

H. Flange bolts, Nuts, and Washer:

1. AWWA C207 for AWWA flanges.
2. Bolts: ASTM A193/A193M, Grade B7.
3. Nuts:
   a. Greater than 1-inch diameter: ASTM A194/A194M, Grade 2H
   b. 1-inch diameter or less: ASTM A563
4. Washers: ASTM F436.

I. Gaskets:

1. Suitable for cold potable water.
2. Use Multi-Swell Style 3760-U manufactured by Garlock, www.garlock.com; or equal, having the following essential characteristics:
   a. Dimensional requirements of AWWA C207.
   b. Flat, full face type.
   c. Minimum 125 psi cold water pressure rating.
   d. Minimum 1/16-inch thick.

J. Flange insulation:

1. Flange isolating gasket kit complete with the “Trojan” type of gasket manufactured by Advanced Products and Systems, Inc., www.apsonline.com; or equal, having the following essential characteristics:
   a. Dielectrically isolates flanges, bolts and washers.
   b. Provide full-faced gaskets as shown on drawings. Outside diameter of gasket is same as outside diameter of flange.
   c. Provide retainer with integral Nitrile sealing element (“Trojan” type).

d. Retainer material to be suitable for cold water service as recommended by gasket manufacturer.

e. One insulating sleeve and 2 insulating washers for each bolt. Material suitable for cold water service as recommended by gasket manufacturer.

f. Asbestos gaskets are not acceptable.

g. Prevent damage to gasket, gasket supplier to provide required bolt torques, recommended bolt tightening sequence, and flange face finish for insulating flanged joints.

h. Suitable for 150 psig cold water service.

K. Butt-welding steel fittings:

1. ASME B16.9 and ASTM A234 or ASTM A420 - WPL6.

L. Threaded fittings:

1. Threaded NPT: ASME B1.20.1.

a. Stainless steel: ASME B16.11 and ASTM A182, Type 304 or 316.

b. Brass: ASTM B687 and ASTM B43.

M. Steel Pipe Miter Bend Elbows: Designed, fabricated, and dimensioned in accordance with AWWA C208.

N. Steel Pipe Reducers:

1. Designed, fabricated, and dimensioned in accordance with AWWA C208 or ASME B16.9.

O. Grooved-end Couplings:

1. Style 77 or Style W77 manufactured by Victaulic, www.victaulic.com; or equal, having the following essential characteristics:

a. AWWA C606.

b. Rigid joint type with rolled grooves.

c. Minimum cold water working pressure ratings: 125 psi.

P. Corrosion Ring:

1. Steel plate: ASTM A36, ASTM A1011, Grade 36, 40, or 45; or ASTM A1018, Grade 36 or 40.

Q. Seep Ring:

1. Steel plate: ASTM A36, ASTM A1011, Grade 36, 40, or 45; or ASTM A1018, Grade 36 or 40.

R. Anchor bolts:

1. Expansion anchors or epoxy type anchor bolts with studs and epoxy as shown on the drawings:
   a. Expansion anchors:
   b. CID A-A-1923A, Type 4.

2.02 FABRICATION

A. Fabricate steel piping in accordance with these specifications, as indicated on drawings, and in accordance with AWWA C200.

B. Longitudinal, girth, and spiral joints, other than field welds:
   1. Double-welded butt joints with complete penetration.
   2. Stagger longitudinal joints.
   3. Longitudinal, girth, and spiral joints shall not intersect at outlet connections.

C. Cut plates accurately to size and shape.

D. Bend or roll plates to true circular with curvature continuous from edges of plates.

E. Properly form edges to be joined by welding to suit type of welding and to allow complete penetration.

F. Perform welding with a process that protects molten metal from atmosphere:
   1. Where practicable, use automatic machines.
   2. Where weld metal is deposited in successive layers, clean each layer thoroughly before subsequent layer is deposited.
   3. Take particular care in aligning and separating edges of plates to be joined by butt welding so that complete penetration and fusion of welds will be ensured.
   4. After welding is complete, remove weld spatter.

G. Protect work and operator from wind, rain, and snow during welding operations:
   1. Welding is not permitted on wet surfaces or when temperature of steel is lower than 0 degrees F.
   2. Apply heat to welding areas as needed during field installation. At pipe surface temperatures between 0 and 32 degrees F, heat surface of areas within 3-inches of the point where a weld is to be started to at least 60 degrees F.

H. Ends to be joined by a pipe coupling:
   1. Exterior surface of pipe end to be connected with sleeve-type coupling shall be free from weld reinforcement (bead), seams, scars, dents, flats, or other defects likely to interfere with joint-sealing process in accordance with coupling manufacturer instructions.

I. Flanges and flanged connections:

1. During attachment of flanges to associated steel pipe, take adequate steps to ensure that face of flanges remains flat and perpendicular to centerline of attached piping.
2. Remove by machining, initial, residual, or latent irregularities or warping that remains in face of flange after its attachment to steel piping that exceeds the above.
3. After machining, flange thickness shall not be reduced below minimum thickness specified in AWWA C207.
4. Weld pipe flanges to the piping so that bolt holes straddle vertical centerline when in the installed position.
5. Provide pipe flanges that connect to valve body flanges with same number of bolt holes, bolt pattern, bolt circle diameter, and face type, flat or raised, as valves to which they are connected.

J. Continuously weld joints of flange supports and pipe supports.

2.03 CONTRACTOR SOURCE QUALITY TESTING

A. Flange Weld:

1. Test flange welds by magnetic particle or liquid penetrant method in accordance with AWS D1.1.
2. Repair defects and retest weld.

B. Hydrostatic Pressure Testing:

1. Straight sections of metal piping manufactured and hydrostatically tested in accordance with ASTM A53 or ASTM A139 need not be retested.
2. Notify Government a minimum of 30-days before test.
3. Government may witness hydrostatic test and calibration of pressure gauges.
4. Use 2 or more pressure gauges with one being a recording type:
   a. Upper limit of pressure gauges shall be between 1.5 and 3 times required test pressure. Calibrate pressure gauges with a deadweight tester.
   b. Calibrate at least 1 gauge, which is used for acceptance of test, within 30-days prior to use.
   c. Make a time-pressure record of hydrostatic pressure test.
5. Furnish temporary supports, bulkheads, air vents, dead weight tester, and other equipment necessary to perform hydrostatic tests.
6. If flange is attached to piping section after piping section has been hydrostatically tested, piping section will not require retesting.
7. Water temperature for tests: Greater than 45 degrees F.

8. Vent air from test sections.
9. Fill each section with water and uniformly increase pressure until required test pressure is reached:
   a. Hydrostatic test pressure = 50 psig
   b. Hold test pressure for a minimum of 15-minutes.
   c. Apply and release test pressure 3 successive times.
   d. After each application, hold pressure to 2/3 of required pressure until welded joints and seams can be examined.
   e. Repair defects. After defects are repaired repeat complete test procedure.
10. After hydrostatic testing is completed, cut sections for handling purposes on planes normal to pipe axis.

PART 3 EXECUTION

3.01 INSTALLATION

A. Install steel piping to line and grade as shown on drawings and in accordance with AWWA C604:
   1. Install steel pipe in accordance with the approved Pipe Installation Procedure.

B. Prevent steel pipe from being displaced or overstressed during concrete and backfill placement.

C. Furnish and install supports and bracing as may be required to hold steel piping in place, prevent distortion, and prevent flotation during erection, placing of concrete. Supports and bracing shall bear against the exterior pipe surface a minimum of 120-degrees of the pipe circumference and not create a point load on the pipe:
   1. Embedment of timber supports will not be permitted.
   2. If used for the support system, cables or chains may not bear directly against the steel pipe or concrete reinforcement.

D. Contact between pipe and rebar will not be allowed.

E. Install pipe spools with flanged connections so that bolt holes straddle vertical centerline when in installed position.

F. Dielectrically insulate between dissimilar metals:
   1. Provide insulating type unions at threaded valve, pipe or fitting connections between dissimilar metals.

G. Install pipe couplings, gaskets, and other appurtenances in accordance with manufacturer instructions.

H. Install anchor bolts in accordance with manufacturer instructions.

I. Field joints:

1. 1. Field joints shown on drawings are required to facilitate lining or installation of steel piping.
2. Allowable field joints for steel manifold piping:
   a. a. AWWA C207, AWWA C228, and ASME B16.5 flanged joints per ASME PCC-1 respectively:
      1) Flanges shall be suitable for working pressure of adjacent pipe.
      2) Flanges shall not be permitted underneath buildings, water storage tanks, or in concrete encasements.
   b. Full-penetration butt welds.
   c. Double welded lap joints, or double welded butt strap joints.
   d. Threaded couplings for pipe less than 4-inches in diameter.
3. Welded field joints shall be in accordance with AWWA C206 or AWWA C231.
4. Prepare field welded surfaces and recoat in accordance with Section 09 96 20 – Coatings.

J. Steel manifold piping earthwork: In accordance with Section 31 23 22 – Pipe Trench Earthwork.

3.02 CONTRACTOR FIELD QUALITY TESTING

A. Nondestructive Testing of Field Welds of Steel Pipe:

1. Test all welds in accordance with AWWA C206 and this specification.
2. Complete inspections and tests as work progresses in presence of COR and in accordance with AWS D1.1.
3. When welds are found to be defective by the standards of AWS, repair welds in accordance with AWS D1.1 and reexamine welds to ensure the adequacy of repairs.
4. Visual Inspection: Visually inspect all welds following procedures, techniques, and standards of AWS D1.1.
5. Testing of full penetration joints:
   a. Ultrasonic methods in accordance with AWS D1.1.
6. Testing of partial penetration joint field welds and fillet field welds, including testing of double welded butt strap joints or double welded lap joints:
   a. Magnetic particle testing: ASTM E709.
   b. Dye penetrant: ASTM E165.
   c. Standards of acceptance for both types: AWS D1.1.
   d. Caulking or peening of defective welds is not permitted.

e. Repair and retest unsatisfactory welds.

7. Testing to include field welds within the Prefabricated pump station.

B. Field Hydrostatic Pressure Testing:

1. Perform pressure tests at each project site once all yard piping has been installed, but prior to backfill of buried pipe.

   a. Booster Plant site: Perform pressure testing prior to connection to premanufactured booster plant.

   b. Regulating Tank 3 site: Perform pressure testing prior to connection to welded steel tank piping.

2. Use 2 or more pressure gauges with one being a recording type:

   a. Upper limit of pressure gauges shall be between 1.5 and 3 times required test pressure. Calibrate pressure gauges with a deadweight tester.

   b. Calibrate at least 1 gauge, which is used for acceptance of test, within 30-days prior to use.

   c. Make a time-pressure record of hydrostatic pressure test.

3. Furnish temporary supports, bulkheads, air vents, dead weight tester, and other equipment necessary to perform hydrostatic tests.

4. Water temperature for tests: Greater than 45 degrees F.

5. Vent air from test sections.

6. Fill each section with water and uniformly increase pressure until required test pressure is reached:

   a. Hydrostatic test pressure = 50 psig

   b. Hold test pressure for a minimum of 15-minutes.

   c. Visually inspect pressurized pipe and pipe connections for leaks.

   d. Apply and release test pressure 3 successive times.

   e. After each application, hold pressure to 2/3 of required pressure until welded joints and seams can be examined.

   f. Repair defects. After defects are repaired repeat complete test procedure.

3.03 LINING AND COATING

A. Refer to Section 09 96 20 – Coatings.

END OF SECTION

SECTION 35 22 14
VALVES AND EQUIPMENT

PART 1 GENERAL

1.01 MEASUREMENT AND PAYMENT

A. Valves and Equipment:

1. Payment: Lump sum prices offered in Price Schedule for various types and sizes of valves and equipment provided as shown on drawings.

1.02 DEFINITIONS

A. Details of valves and equipment are shown on drawings:

1. Booster Station site: 1695-D-62366 through 1695-D-62369 and associated reference drawings.
2. Regulating Tank 3B site: 1695-D-62370 through 1695-D-62376 and associated reference drawings.

1.03 REFERENCE STANDARDS

A. American National Standards Institute (ANSI)

1.	ANSI/NSF 61-20	Drinking Water System Components – Health Effects
2.	ANSI/NSF 372-20	Drinking Water System Components – Lead Content

B. American Society of Mechanical Engineers (ASME)

1.	ASME B16.5-2020	Pipe Flanges and Flanged Fittings: NPS 1/2 through NPS 24 Metric/Inch

C. ASTM International (ASTM)

1.	ASTM A536-84(2019)e1	Ductile Iron Castings

D. American Water Works Association (AWWA)

1.	AWWA C110-21	Ductile-Iron and Gray-Iron Fittings
2.	AWWA C207-18	Steel Pipe Flanges for Waterworks Service, Sizes 4 In. through 144 In.
3.	AWWA C504-15	Rubber-Seated Butterfly Valves
4.	AWWA C509-23	Resilient-Seated Gate Valves for Water-Supply Service

5. AWWA C515-20 — Reduced-Wall, Resilient-Seated Gate Valves for Water Supply Service

6. AWWA C800-21 — Underground Service Line Valves and Fittings

E. Manufacturers Standardization Society of the Valves and Fittings Industry (MSS)

1. MSS SP-110-2010 — Ball Valves Threaded, Socket–Welding, Solder Joint, Grooved, and Flared Ends

1.04 SUBMITTALS

A. Submit in accordance with Section 01 33 00 – Submittals and Section 01 33 26 – Electrical Drawings and Data.

B. RSN 35 22 14–1, Commercial Products Data:

1. Items listed in PART 2 PRODUCTS.

C. RSN 35 22 14–2, Source Quality Testing Certifications and Reports:

1. Hydrostatic pressure testing certifications and pressures used in testing valves:

a. AWWA Class 150B butterfly valves tested in accordance AWWA C504.

b. Gate Valves tested in accordance with AWWA C509 or AWWA C515.

D. RSN 35 22 14–3, Service Manuals:

1. For each valve and equipment type listed in PART 2, include:

a. Complete parts identification lists including clearly identified recommended spare parts.

b. Lists of special tools and accessories.

c. Detailed instructions for installing, adjusting, operating, lubricating, and maintaining the equipment.

1.05 SPARE PARTS AND MATERIALS

A. Provide one extra set of seats for each size and type of butterfly valve and gate valve.

1.06 DELIVERY, STORAGE, AND HANDLING

A. Take precaution during loading, transportation, unloading, storage, and laying, to prevent damage to the valves and equipment:

1. Repair damage to the valves and equipment as directed if, in the opinion of Contracting Officer's Representative (COR), a satisfactory repair can be made; otherwise replace damaged valves and equipment.

2. Ship, handle, and store according to manufacturer's instructions.

PART 2 PRODUCTS

2.01 GENERAL REQUIREMENTS

A. NSF/ANSI 61 certified.

B. NSF/ANSI 372 certified lead-free.

C. Suitable for potable water.

D. Materials suitable for free chlorine residual exposure:

1. Typical free chlorine residual concentration: Maximum 4 milligrams per liter (mg/l).

E. Valve Body Flange Faces and Flanges:

1. Valve manufacturers are responsible for providing the correct flange face gasket surface finish.
2. Provide spiral or concentric serrated grooved flange face gasket surface finishes that are suitable for the gasket material provided and for the operating pressures.
3. Valve flange bolt patterns to match pipe flanges.

F. Furnish valves and actuators of same type and size from same manufacturer.

G. Valves with threaded connections:

1. Threaded NPT: ASME B1.20.1.

2.02 VALVES

A. Ball Valves

1. Ball Corporation Stop Valves:
   a. FB500-4-NL manufactured by Ford Meter Box Co., www.fordmeterbox.com; B-20046N manufactured by Mueller Co., www.muellercompany.com; or equal, having the following essential characteristics:
      1) AWWA C800
      2) Threaded NPT: ASME B1.20.1.
      3) Minimum 125 psig cold water working pressure rating.
      4) Body: Brass
2. Manually Operated Ball Valves:
   a. 94A-100 Series manufactured by Apollo Valves, www.apollovalves.com; or equal, having the following essential characteristics:

1) Bubble tight at the rated pressure in either direction and suitable for operation after long periods of inactivity.

2) MSS SP-110.

3) Body: Full ported, brass.

4) Ball: Stainless-steel.

5) Valve stem: Stainless-steel.

6) Packing gland: Stainless-steel.

7) Female threaded ends.

8) Cold water pressure rating of not less than 500 psi.

B. Gate Valves:

1. Series A-2361 manufactured by Mueller Co. LLC, www.muellercompany.com, Resilient Wedge Gate Valve manufactured by Clow Valve Co., www.clowvalve.com; or equal, having the following essential characteristics:

a. Valves shall be marked per AWWA Standards, including name of manufacturer, valve size, and working pressure and year of manufacture.

b. AWWA C509 or AWWA C515.

c. Ductile iron or cast-iron bonnet.

d. Body and wedge shall be made of ductile iron.

e. Non-rising stem.

f. Gate valves called out on drawings to have mechanical joint connections shall be provided valve ends suitable with mechanical joint connections.

g. Wedges shall be fully encapsulated with EPDM rubber.

h. Minimum cold-water working pressure rating of 150 psig.

i. Bubble tight at the rated pressure in either direction and suitable for operation after long periods of inactivity.

j. Buried service:

1) Suitable for buried service.

2) Operating nuts shall be 2-inch square and shall be cast or ductile iron.

3) Provide valve boxes.

4) 2-inch square-nut operator.

5) Provide extension stems where required to raise the operating nut to within 6 inches of the ground surface:

a) The extension shall not be attached with set screws; only use roll pins or bolt locking nut that extends through extension and valve shaft.

6) Provide two 2 steel tee-handle wrenches, each with a length of 4 feet.

C. Butterfly Valves:

1. General:

a. AWWA C504.

b. Pressure class: 150B

c. Provide valves which are bubbletight at rated pressure in either direction and suitable for operation after long periods of inactivity.

d. Shaft material: Stainless steel.

e. Seats: Buna-N.

f. Install butterfly valves complete and lubricated in accordance with the manufacturer's instructions.

g. Axis of valve leaf: Horizontal when the valve is in the installed position, except where shown on the drawings.

h. Resilient seated:

1) Located either in the valve body mating with a stainless steel seating surface located on valve disc; or in valve disc mating with a stainless steel seating surface located in valve body:

a) No fully rubber lined bonded seat in body type seats are acceptable.

b) Resilient seats shall be mechanically retained and field replaceable.

i. Body flanges suitable for connection to AWWA Class D flanges.

D. Flap Valves:

1. Model A2540 series as manufactured by Troy Valve, www.penntroy.com; or equal, having the following essential characteristics:

a. Cast iron body and cover.

b. Bronze seat and disc ring.

c. Stainless steel hinge pin and cotter pins.

d. Constructed with a 10-degree offset from vertical for positive closure.

e. Flange to match pipe flange shown on drawings.

1) Flange to have full bolt pattern

2.03 ACTUATORS

A. Manual operators for valves:

1. Equip all manually operated butterfly valves with a worm-gear or a traveling nut type manual operator.
2. Worm-gear or traveling nut type manual operator in accordance with AWWA C504.
3. Rim pull and component strength meets AWWA C504.
4. Provide gears of the self-locking type, designed to hold the valve in all positions without fluttering or creeping.
5. Provide operators that will open and close the valves under maximum unbalanced pressure conditions:
   a. AWWA C504 Class 150B butterfly valves: Design for a maximum unbalanced pressure of 150 psig.
6. Buried valves:
   a. Suitable for buried and submerged service.
   b. Provide valve boxes.
   c. Provide 2-inch square-nut operator.
   d. Provide extension stems where required to raise the operating nut to within 6-inches of the ground surface where shown on the drawings:
      1) To prevent disconnection below top of valve box, attach extension stems using roll pins or bolts with locking nuts that extend completely through stem extension connection.
   e. Two steel tee-handle wrenches, each with a length of 4-feet.

2.04 APPURTENENACES

A. Valve Boxes:

1. Model 6855 series, manufactured by Tyler Union, www.tylerunion.com; or equal, having the following essential characteristics:
   a. Cast iron locking lid with wrench.
   b. Cast iron collar with lid marked "WATER".
   c. 5 1/4-inch minimum inside diameter cast iron, composite, or PVC valve boxes for valves 4-inches in diameter and larger.
   d. 2-piece or 3-piece and slip type.
   e. Base and adequate extension items to extend from valve nut operator to ground surface.

2. Concrete collar flush mounted with ground surface. Refer to Drawings 1695-D-62369 and 1695-D-62358

B. Mechanical joint restraints:

1. Megalug Series 2000PV manufactured by EBAA Iron, Inc., www.ebaa.com; or equal, having the following essential characteristics:

a. AWWA C110 and AWWA C111.

b. Suitable for use with HDPE pipe and PVC pipe.

1) Provide manufacturer recommended stainless-steel stiffener when used on HDPE pipe.

c. Multiple gripping wedges incorporated into a follower gland.

d. Gland body: ASTM A536.

e. Minimum 150 psi working pressure rating.

f. Provide gasket size and type for the connection

C. Restrained flange adapters:

1. Megaflange Series 2100 manufactured by EBBA Iron, Inc., www.ebba.com,; or equal, having the following essential characteristics:

a. Suitable for connection to adjacent flange.

b. Suitable for use with PVC pipe.

c. Multiple gripping wedges incorporated into a follower gland.

d. Material: ASTM A536.

e. Minimum 150 psi working pressure rating.

f. Provide gasket size and type for the appropriate connecting pipe material.

D. Transition couplings:

1. Steel to PVC

a. Megalug Series 3800 manufactured by EBBA Iron, Inc., www.ebba.com; Aquamine Series 2972 Transition Coupling For PVC manufactured by Victaulic, www.victaulic.com; or equal, having the following essential characteristics

1) Suitable for plain or grooved end pipe.

2) Multiple gripping wedges incorporated into a follower gland.

3) Suitable for connecting steel pipe to PVC pipe.

4) Material: ASTM A536.

5) Minimum 125 psi working pressure rating.

6) Minimum allowable deflection: 1 degree.

2.05 CONTRACTOR SOURCE QUALITY TESTING

A. Tests will be Government witnessed. Notify COR 30 days prior to valve testing.

B. Minimize number of Government trips by testing all valves from same manufacturer during same Government trip.

C. Ball Valves:

1. Perform leakage and hydrostatic shop tests in accordance with AWWA C507. Submit Affidavit of Compliance.

D. Gate Valves:

1. Perform leakage and hydrostatic shop tests in accordance with AWWA C509 or AWWA C515 as applicable. Submit Affidavit of Compliance.

E. Butterfly Valves:

1. Test AWWA butterfly valves in accordance with AWWA C504.

a. Leak test valves in both directions and hydrostatically test valves at manufacturer's facility or an alternate facility approved by COR.

b. Prior to shop leakage test and in presence of Government, Contractor shall verify that when valve is fully closed, valve position indicator indicates, "CLOSED".

c. If indicator is not in closed position (exactly at closed), remove operator from valve, fully close valve, reinstall operator so that it indicates, "CLOSED".

d. Shop leakage test:

1) Leakage test in both directions in accordance with AWWA C504. Record results.

2) Spray or high velocity leakage will not be acceptable.

3) If valve leaks, adjustments shall be made until valve is drip tight with no leakage. Adjustments may include adjusting valve stops, seats, actuators, or other components.

4) If valve is not drip tight, valve is unacceptable.

5) After any adjustments are made, valve position indicator shall be inspected again and corrected if necessary.

6) Pressure test valves and their seats for leaks with water in 100 percent closed position for a timed period of 5-minutes with pressure equal to rated design pressure. Valves shall be drip tight with no leakage.

7) Downstream position of valve shall be visible to Government inspector.

PART 3 EXECUTION

3.01 REMOVAL

A. Inspect existing valves and equipment.

B. Notify Government prior to commencing work.

C. Equipment removal, salvage, and demolition of valves and equipment in accordance with:

1. Section 01 74 00 - Cleaning and Waste Management.

3.02 INSTALLATION

A. Dielectrically insulate between dissimilar metals:

1. Provide insulating type unions at threaded valve, pipe or fitting connections between dissimilar metals.

B. Provide a sufficient quantity of unions for removal, replacement and maintenance of valves and equipment.

C. Install the valves and equipment to line and grade as shown on drawings.

D. Install valves with flanged connections so that the bolt holes straddle the vertical centerline when in the installed position.

E. Install valves and gaskets in accordance with the manufacturer's instructions.

F. Valve Tags:

1. Provide brass or stainless steel tags for all valves identified in the Piping and Instrumentation Diagram drawings (drawings 1695-D-62381 through 1695-D-62386).
2. Stamp or engrave tag with the valve identification code designated in the Piping and Instrumentation Diagram drawings (drawings 1695-D-62381 through 1695-D-62386).
3. Permanently attach tag to valve with wire and metal crimp-type connector.

3.03 CONTRACTOR FIELD QUALITY TESTING

A. Field testing:

1. After each valve has been completely installed, test valve in place by opening and closing valve through full range of operation 3 times.
2. Make changes or adjustments until operation is approved by COR, and valves are bubbletight and do not leak water past seats.
3. Valves have zero allowable leakage.

3.04 COATINGS

A. Coat valves and equipment in accordance with Section 09 96 20 – Coatings.

END OF SECTION

SECTION 51 00 00
INFORMATION AVAILABLE TO OFFERORS

PART 1 GENERAL

1.01 ORDER OF PRECEDENCE

A. In case of differences between sections in Division 51 – Information Available to Offerors and sections in other divisions of the specifications, requirements in other divisions will govern.

B. Government assumes no responsibility for deductions, interpretations, or conclusions made by Contractor based on information made available by Government, in accordance with clause at FAR 52.236-3, Site Investigations and Conditions Affecting the Work.

PART 2 PRODUCTS

Not Used

PART 3 EXECUTION

Not Used

END OF SECTION

This page intentionally left blank.

SECTION 51 00 10
PERMIT APPLICATIONS

PART 1 GENERAL

1.01 PERMIT APPLICATIONS

A. Refer to Section 01 55 20 – Traffic Control for details regarding the permit application.

B. Instructions for completing the permit are provided.

PART 2 PRODUCTS

Not Used

PART 3 EXECUTION

Not Used

New Mexico DEPARTMENT OF TRANSPORTATION
MOBILITY FOR EVERYONE

INSTRUCTIONS FOR COMPLETING A UTILITY PERMIT

Any installation of utility facilities on NMDOT right-of-way, or revision of existing facilities thereon, will require the prior approval of a Utility Permit. No construction will be performed on State right-of-way before the utility has received an executed permit from the Commission.

If the application is for a parallel installation, justification as to why private right-of-way may not be utilized must be furnished.

All Utility Permit applications shall consist of the **ORIGINAL** permit form, signed as an individual owner or by authorized officers of companies or municipalities.

All **ORIGINAL** Utility Permit application for installations within Catron, Cibola, McKinley and Sandoval Counties shall be submitted to: **NMDOT District Six, Traffic Permit Section, P.O. Box 2160, Milan, NM 87021.**

The permit application shall be accompanied by a plan/sketch, showing the complete proposed installation details. This plan/sketch shall show: mile post, right-of-way, access control lines and any other pertinent data required to indicate **EXACT** physical location of the proposed installation. For proposed aerial installations, the plan/sketch shall show complete dimensions of the proposed facility, including vertical clearances above roadways (typical section) all poles, anchors and other appurtenances shall be referenced to the right-of-way or the project centerline. For proposed subsurface installations, the sketch shall include a profile indicating depth of cover, physical dimensions, method and length of encasement.

Upon receipt of the approved permit, the applicant shall notify the District Six Traffic Section in writing prior to the date of starting the proposed installation and upon completion. All installations are subject to inspection by NMDOT forces.

PLEASE COMPLETE FORMS IN BLACK INK.

Bill Richardson
Governor

Gary L.J. Giron
Cabinet Secretary

Commission

Johnny Cope
Chairman

Jackson Gibson
Secretary
District 6

District Six Office
P.O. Box 2160
Milan, NM 87021-2160
505-285-3200

Larry Maynard
Engineer
District 6

General Office | P.O. Box 1149 | Santa Fe, NM 87504-1149

Any application for proposed structural installations under State roadways, i.e.: manholes, tunnels, culverts, etc., shall include a detailed structural design drawing showing all physical elements of the proposed structural installation. These will require the approval of the NMDOT Bridge Engineer.

The protection of the public and handling of traffic during the construction of the facility are the responsibility of the permit applicant. At least one lane must be kept open to traffic at all times. Barricades, flagmen, signs and flares shall be provided as necessary.

Traffic control shall be in accordance with the Manual on Uniform Traffic Control Devices.

AERIAL FACILITIES, PARALLEL

If application is for a parallel installation, **justification as to why private right-of-way may not be utilized must be furnished**. Should private right-of-way be unavailable then the proposed installation of aerial utility facilities parallel to a State roadway shall be located one foot within the right-of-way line, wherever practical. Minor variations will be processed on an individual basis. In no case shall parallel facilities be permitted within access control lines at any controlled access location.

AERIAL FACILITIES, CROSSING

The proposed installation of aerial utility facilities crossing a State roadway should cross the roadway at an angle of **90 degrees**, wherever practical. Poles, anchors and other appurtenances shall be located at, near or outside of State rights-of-way. No crossing components shall obtrude upon the foreslope, shoulder or roadway surface and all vertical clearances shall conform to the relevant codes. Minor variations will be processed on an individual basis. In no case shall poles, anchors or other surface components of aerial crossings be permitted within access control lines at any controlled access location.

BURIED FACILITIES, PARALLEL

If application is for a parallel installation, **justification as to why private right-of-way may not be utilized must be furnished**. Should private right-of-way be unavailable then the proposed installation of buried utility facilities parallel to a State roadway should be located **five (5)** feet within the right-of-way line, wherever practical. Minor variations will be processed on an individual basis. In no case shall parallel facilities be permitted within access control lines at any controlled access location. All buried facilities shall be installed at a depth of **seventy-two (72)** inches or more from the surface to the top of the facility. All trenches and ditches will be backfilled and compacted by the permit applicant. All excavations outside the roadway foreslopes shall be compacted to a density equal to the surrounding undisturbed soil (Standard Compaction Test, AASHTO Method T-99 or equivalent). Parallel ditches in excess of 350 feet in length shall not remain open over twenty-four (24) hours. Wherever possible, any excavations on or near a traveled way should not remain open overnight. The permit applicant shall be responsible for the backfill and compaction of all excavations, and shall be responsible for the safety of the traveling public.

BURIED FACILITIES, CROSSING

The proposed installation of buried utility facilities crossing a State roadway should cross at an angle of **ninety (90)** degrees, wherever practical. Surface components of proposed buried crossings shall be within **five (5)** feet of the right-of-way line. All buried facility crossings shall be installed at a depth of **seventy-two (72)** inches or more from the low point of the roadway to the top of the facility. Minor variations will be processed on an individual basis. In no case shall surface components of buried crossings be permitted within the access control lines at any controlled access location.

Wherever possible, installation of buried facilities crossing a State roadway shall be performed by boring or jacking under the roadway. Installation by open cut of the roadway will be permitted only where boring or jacking is not feasible. The permit applicant shall be responsible for surface restoration on open cut installations, and may be required to assume maintenance on the portion of roadway affected until the Department repaves the roadway.

All proposed buried carrier pipes crossing a State roadway shall be constructed of steel, case iron or reinforced concrete pipe and/or shall be encased in metal pipe. Each question of encasement shall be considered on any individual basis. For all controlled access locations, the encasement shall extend completely across the access control lines. For other locations the encasement shall extend from toe of slope to toe of slope.

Complicated utility requests should be discussed with the **District Six-Traffic Engineer**, prior to submission. The Traffic Engineer may be contacted at (505) 285-3220 in Milan, New Mexico.

RENEWAL AND REVOCATIONS

The permit applicant shall be responsible for notifying the NMDOT of the removal of abandoned facilities. The applicant shall also be responsible for the renewal of permit upon their expiration. The construction of any facility upon State right-of-way without an executed permit, or the violation of any terms or conditions of a permit, may be just cause for the complete removal of such facilities at the sole cost of the owner thereof.

FORM

Begin with the line entitled **(UNDERSIGNED)**. A home and/or business phone number for the owner or his representative is to be included on the application.

Location on the proposed utility is to be described by the **SECTION/TOWNSHIP/RANGE** and urban areas, by **BLOCK/LOT/SUB** (where applicable). In addition, a distance from a NMDOT mile marker to the centerline of the utility in rural areas must be included. In urban areas, distances from existing intersection or other stationary objects, which can be identified on highway plans, to the centerline of the utility must be included.

The review of the permit normally requires **thirty (30)** days for completion. Please allow this amount of time when planning work schedules.

PLEASE COMPLETE ALL FORMS IN BLACK INK.

UTILITY APPLICATION REQUIREMENTS

The following are requirements for obtaining a Utility Permit.

1. Insurance naming the NMDOT as additionally insured. (Section 12.11)

2. Utility Companies must provide documented authorization from the agencies for installations on land controlled by the U.S. Forest Service, BLM, U.S. Military Bases, Indian Lands and other designated state lands. (Section 12.9)

3. Traffic control plans shall be submitted in accordance to the Manual on Uniform Traffic Control Devices, Part Six current edition (Section 12.9).

4. Archeological Clearance. The Department, contact Ms. Genevieve Head, Archeological Department, at 827-5513 (Section 12.6.8), may have already cleared the area in question. If the area has not been cleared the attached Environmental Scoping Review Checklist **shall** be included.

5. Provide **as built plans** within thirty (30) days of project completion (Section 12.7.2).

OBTAINING ARCHEOLOGICAL CLEARANCE

1. Locate your project on a location map. Include section, township and range on the map. The map should be suitable for comparison with a U.S.G.S. 7.5' quad map. Sufficient landmarks shall be included on the map so that the project location can be located in the Environmental Section.

2. Write a description of your project and include it with the map. The description should include dimensions (length and width), and the nature of the project.

   EXAMPLE: "{Company} will install a buried cable in the {State Route} right-of-way. The installation will start at the junction of NM44 & NM126 and proceed south for 528 feet. At this location, the installation will leave the right-of-way and enter private land. The trench will be three feet wide."

The Department jurisdiction is only over right-of-way, which is not adjacent to State Trust or Federal land: BLM, National Forest, BIA, etc.

3. Include your name, address, telephone, and fax number. If you do not include your fax number, the archeological clearance will be mailed to you.

4. The attached "**Environmental Scoping Review**" checklist shall accompany all submitted materials.

5. The New Mexico Department of Transportation contact for cultural resources on utility projects is:

   NMDOT Environmental Section, **Genevieve Head**
   P.O. Box 1149
   Santa Fe, NM 87504
   Phone: (505) 827-5513 Fax: (505) 827-6862

UTILITY SURVEY DATA REQUIREMENTS

The following "metadata" (data about the data) shall be submitted with each utility's as-builts and electronic file, preferably as a separate text file on the submittal media. This information is critical to the Department so as to properly archive the data, as well as to provide follow-up capability in the event problems arise with the data:

1. District Utility Permit number.
2. Name, address and phone number of the responsible Land Surveyor.
3. Date of survey completion.
4. Equipment used to conduct the survey (e.g. total station, GPS, spirit level).
5. Reference mark(s) used to tie the survey to NM State Plane Coordinate System 1983, and to North American Vertical Datum 1988.
6. Ground-to-Grid combined scale factor used.

Note that elevations SHALL be provided every 500', and at all break points, including high and low points.

UTILITY PERMIT CHECK LIST

- ❑ Insurance naming the NMDOT as additionally insured. (Section 12.11)
- ❑ Documented authorization from the agency for the installation **when** the U.S. Forest Service, BLM, U.S. Military Bases, Indian Lands and other designated state lands controls the land. (Section 12.8)
- ❑ Traffic control plans shall be submitted in accordance to the Manual on Uniform Traffic Control Devices, Part Six current edition. (Section 12.9)
- ❑ Archeological clearance. (Section 12.6.8)
- ❑ Provide as built plans within thirty (30) days of project completion. (Section 12.7.2)
- ❑ Note seeding requirements for District Six on page 19 of current regulations. (Section 12.5.2)
- ❑ Return the completed **ORIGINAL** permit package to: **NMDOT, Traffic Permit Section**
  P.O. Box 2160
  Milan, NM 87021

District Six Traffic Section

APPLICATION FOR PERMIT TO INSTALL UTILITY FACILITIES

WITHIN PUBLIC RIGHT OF WAY

TO: NEW MEXICO DEPARTMENT
OF TRANSPORTATION
DISTRICT SIX
P.O. BOX 2160
MILAN, NM 87021

Permit No. _____

_____New Installation
_____Renewal Permit
_____Relocation
_____Remain in Place

1. Pursuant to New Mexico Statutes Annotated, 1978 Compilation, Sections 67-8-13 and 69-8-14, the undersigned

_____

Address:_____

herein makes application to use highway right of way to install:

Size and Type of Facility_____

in the following location: NM Project No._____ State Road No._____

Hwy. Station _____ to Hwy Station_____Mile Post _____to Mile Post_____

County Section _____, Township _____ , Range _____

2. For the purpose of this application "within" shall be construed as meaning "on, over, under, across, or along".
   a. 'Engineer' shall be construed as meaning the District Engineer of the New Mexico Department of Transportation or his representative.
   b. 'Applicant' shall be construed as meaning the individual, firm, corporation, association, governmental subdivision, or other organization making application, or the successors of any of the above.
   c. Facility' shall be construed as meaning, but not limited to, and publicly, privately, cooperatively, municipally or governmentally owned facility used for carriage, distribution or transmission of water, gas or electricity, oil and products derived therefrom, sewage, steam or other projects carried by means of pipelines, conduits, wires, culverts, ditches, conveyors or other methods.
   d. If application is for a parallel installation, justification as to why private right of way may not be utilized must be furnished.

3. Applicant proposes to relocate, install or leave facility _____feet within the _____right-of-way line. The proposed installation shall be:

_____
(Crossing or Parallel) (Subsurface or Overhead) (Boring, Jacking or Pavement Cut)

   a. If applicant requests installation by pavement cut, complete justification therefore shall be submitted by attachment.
   b. Where application for pavement cut is justified, the application may be held in abeyance pending receipt of cash bond in an amount to be fixed by the Engineer.

4. There is attached hereto a diagrammatic dimensioned drawing showing the location of existing and/or proposed installation referenced to roadway and right of way, right of way lines, any access control lines, distance of proposed installation above or below grade, highway stationing, identification of materials to be used and any other pertinent data. If application is for parallel installation, nature of adjacent land use shall be shown. Proposed installation on or in bridge or other structures, or for the installation of any structures, will require detailed structural drawings.

5. Applicant desires this permit to be in affect for _25_____years. Permit will not be issued for a period longer than 25 years must be renewed upon expiration and the burden of timely renewal is on the Applicant. The Applicant shall formally notify the Engineer of actual commencement and completion of construction of the installation. The Applicant shall also formally notify the Engineer of removal or abandonment of the facility, or relinquishment of the permit.

6. The signing of the application by the Engineer and returning it to the Applicant shall validate this application as a permit. The granting of this permit shall not be construed as granting any easement or property right.

7. Servicing of facilities will not be permitted within the access control lines on any controlled access project. Should an emergency occur, the Applicant shall notify the Engineer and shall provide such flagmen, flashers, warning or other safety devices as required by the Engineer. All routine maintenance shall be performed from outside any access control lines.

8. The relocation or installation of facilities within public right of way shall be in strict conformance with all provisions of this application, drawing and the instructions for Utility Permits, as they may be modified by the Engineer, and no departure there from may be made without the written consent of the Engineer. All facilities shall be so placed that they will not interfere with nor endanger any roadway features nor other existing facilities. All construction of facilities shall be subject to the inspection and approval of the Engineer. All such work shall be performed so that danger, inconvenience and delay to the traveling public will be held to a minimum. Protection and handling of traffic during the installation are the responsibility of the Applicant, and must be approved by the Engineer.

District Six Traffic Section

9. The applicant will, except as otherwise ordered by the Engineer, restore the public right of way, and all bridges or other structures thereon or adjacent thereto which have been altered or affected by facility installation performed hereunder, in accordance with sound construction practices and the Engineer's specifications, and shall cause the work to be done in a workman like manner. If any damage is caused to the highway right of way or to any bridge, structure or improvement thereon or adjacent thereto by reason of the installation, maintenance, alteration or removal of such facilities or other appurtenances, the Applicant will reimburse the Engineer the full amount thereof promptly upon demand by the Engineer; provided, however, that the obligation imposed under this paragraph shall not apply in the event the damage resulted from causes beyond the control of the Applicant. All such facilities located within the right of way shall at all times be kept in such repair so as not to damage the highway, inconvenience or endanger the traveling public and shall be kept free from advertisement, posters and the like.

10. The applicant will at all times indemnify and save harmless the Engineer from any and all claims of every kind of character caused by or incident to the installation, alteration, removal or condition of these facilities in the right of way and will promptly reimburse the Engineer for any and all expenses incurred by the Engineer in resisting any such claim or claims. Nothing herein shall be construed to mean that the Applicant hereunder will indemnify and save harmless the Engineer from any claim caused by or incident to any neglect, carelessness or breach of duty on the part of the Engineer.

11. Should the Applicant at any time fail to promptly and fully perform any of the obligations imposed hereby and after thirty (30) days written notice thereof, the Engineer may at his option (a) cause the obligations to be fully carried out and performed, and the Applicant will promptly reimburse the Engineer for all costs and expenses incident thereto, (b) may summarily order the removal of such facility and if the Applicant fails to comply within a reasonable time, the Engineer may direct the removal of the facility with all costs and expenses thereto to be borne by the Applicant.

12. If by reason of any change in the location, construction, grade or by any other matter affecting the highway upon which any facility is located because of changing traffic conditions or otherwise, it shall become advisable in the opinion of the Engineer that said facility be removed, relocated or otherwise modified, the Applicant, upon written notice from the Engineer, shall remove, relocate or modify such facility without undue delay in such manner as the Engineer may direct or approve, at the Applicant's expense and at no cost to the Engineer. All facilities located on public right of way under the dual jurisdiction of the State and a subordinate governmental entity shall comply with all applicable rules and regulations of such entity properly and lawfully in force and including but not limited to provisions of the local franchises not in conflict with the rules and regulations of the Engineer. The Engineer makes no warranty either express or implied as to the continued existence of any highway in any particular location and expressly assumes no obligation with regard to the facility upon change, vacation or abandonment of any highway portions thereof.

13. Neither the making of this application nor anything herein contained shall constitute a waiver on the part of the Applicant of any rights or claims had or made by some with respect to the occupancy of the streets and highways under the Constitution and Laws of the State of New Mexico, nor shall anything herein contain in anywise prejudice or impair any rights or claims existing independent of this application with respect to the construction, operation and maintenance of the applicants facilities in the State of New Mexico.

14. Each copy of the application must be signed by the Applicant as an individual owner or by any official designated to execute such documents. This application is hereby granted subject to all provisions herein and to the following special provision, changes or amendments:

    a. All work performed on State Right-of-Way shall meet the Standard Specifications for Road and Bridge Construction (2000 Edition).
    b. The State's right of way must be restored to it's original condition or better by the Applicant.
    c. Traffic Control shall be in accordance with the Manual on Uniform Traffic Control Devices. (Current Edition)
    d. The Applicant shall notify the District 6 Traffic Section at least 48 hours prior to the start and 48 hours after completion of said project.
    e. The Special Utility Permit Provisions attached hereto as Attachment One and hereby incorporated by reference.
    f. To the extent required by contract or law, this permit is subject to prior approval by underlying fee owner, further identified "_____"
    g. The utility owner shall provide "as-built" horizontal and vertical utility location information, **within thirty (30) days of completion of the project**, in hard copy and electronic file in AUTOCAD DWG (3D) OR MICROSTATION DGN (3D) format. The standard horizontal datum shall be North American Datum 1983 (NAD 83) and standard projections shall be the New Mexico State Plane Coordinate System 1983 (NMSPCS83). The standard vertical datum shall be North American Vertical Datum 1988 (NAVD88). The preferred media in which this data must be submitted is CD ROM; 3.5" diskette may be used for the data submittal. The utility location information shall be tied to Departmental monuments and referenced to highway mileposts or to highway project construction stationing, and certified by a New Mexico Registered Land Surveyor. Metadata or "data about the data" shall be submitted with each utility's as-built electronic file, preferably as a separate text file on the electronic submittal media, and shall include: 1.) District Utility Permit Number. 2.) Name, address and phone number of the responsible land surveyor. 3.) Date of completion of survey. 4.) Equipment used to conduct the survey. 5.) Horizontal and vertical control marks used to tie the survey to the NMSPC83 and NAVD88. 6.) Ground to Grid combined scale factor used. 7.) Elevations shall be provided every 500 feet and at all survey break points, including all high and low points

---

Applicant _____

By _____ Date _____

Title _____

Approval of this permit is hereby given this _____ day of _____ 20_____

NEW MEXICO DEPARTMENT OF TRANSPORTATION

By: _____
District Engineer

END OF SECTION

SECTION 51 00 20
I/O POINTS LIST

PART 1 GENERAL

1.01 PROJECT CONDITIONS

A. Where there are differences as determined by CO between details shown on drawings and details of existing features at jobsite, use details of existing features at jobsite.

1.02 INPUT/OUTPUT LIST

A. Lists are solely for information of Contractor.

B. Government assumes no responsibility for deductions, interpretations, or conclusions made by Contractor based on information made available by Government, in accordance with the clause at FAR 52.236-3, Site Investigations and Conditions Affecting the Work.

C. I/O points may change throughout Contractor system design period.

D. Provide a minimum of 20 percent fully implemented spare for each I/O point type.

E. Contractor to update I/O Points Lists with information for “Data Point Identifier” and “Data Point Address” columns as per RSN 25 00 01-10, Approval Data – Final Drawings and Documentation. Hand-written entries are not acceptable. Government will provide “editable” version of these lists for which Contractor will type in required information.

1.03 LISTS

A. Pumping Plant No. 1 Discrete and Analog I/O List:

Table 51 00 20A – Pumping Plant No. 1 I/O List

Point No.	Source	Description	Data Point Identifier	Data Point Address	Signal	Type
1	S01A02-PS-101	Pump S01A02-P-U1 Suction Pressure Low			Discrete	Input
2	S01A02-PS-102	Pump S01A02-P-U1 Discharge Pressure High			Discrete	Input
3	S01A02-PS-201	Pump S01A02-P-U2 Suction Pressure Low			Discrete	Input
4	S01A02-PS-202	Pump S01A02-P-U2 Discharge Pressure High			Discrete	Input
5	S01A02-PS-301	Pump S01A02-P-U3 Suction Pressure Low			Discrete	Input
6	S01A02-PS-302	Pump S01A02-P-U3 Discharge Pressure High			Discrete	Input
7	S01A02-PS-401	Pump S01A02-P-U4 Suction Pressure Low			Discrete	Input
8	S01A02-PS-402	Pump S01A02-P-U4 Discharge Pressure High			Discrete	Input

Table 51 00 20A – Pumping Plant No. 1 I/O List						
Point No.	Source	Description	Data Point Identifier	Data Point Address	Signal	Type
9	S01A02-PS-501	Pump S01A02-P-U5 Suction Pressure Low			Discrete	Input
10	S01A02-PS-502	Pump S01A02-P-U5 Discharge Pressure High			Discrete	Input
11	S01A02-PS-601	Pump S01A02-P-U6 Suction Pressure Low			Discrete	Input
12	S01A02-PS-602	Pump S01A02-P-U6 Discharge Pressure High			Discrete	Input
13	S01A02-PS-701	Pump S01A02-P-U7 Suction Pressure Low			Discrete	Input
14	S01A02-PS-702	Pump S01A02-P-U7 Discharge Pressure High			Discrete	Input
15	S01A02-PIT-703	S01A02-Discharge Header Pressure			Analog	Input
16	S01A04-LSO-501	S01A04-Plant Drainage Sump, Sump Level HighHigh			Discrete	Input
]\	S01A04-LE-601	S01A04-Plant Drainage Sump, Oil Detected			Discrete	Input

Table 51 00 20A – Pumping Plant No. 1 I/O List						
Point No.	Source	Description	Data Point Identifier	Data Point Address	Signal	Type
17	S01A03-ZSO-101	Air Chamber S01A03-BFV-AC1-1 Isolation Valve Open			Discrete	Input
18	S01A03-ZSC-101	Air Chamber S01A03-BFV-AC1-1 Isolation Valve Closed			Discrete	Input
19	S01A03-ZSO-201	Air Chamber S01A03-BFV-AC2-1 Isolation Valve Open			Discrete	Input
20	S01A03-ZSC-201	Air Chamber S01A03-BFV-AC2-1 Isolation Valve Closed			Discrete	Input
21	S01A04-ZSO-301	Air Chamber S01A04-BFV-AC3-1 Isolation Valve Open			Discrete	Input
22	S01A04-ZSC-301	Air Chamber S01A04-BFV-AC3-1 Isolation Valve Closed			Discrete	Input
23	S01A04-ZSO-401	Air Chamber S01A04-BFV-AC4-1 Isolation Valve Open			Discrete	Input
24	S01A04-ZSC-401	Air Chamber S01A04-BFV-AC4-1 Isolation Valve Closed			Discrete	Input

Table 51 00 20A – Pumping Plant No. 1 I/O List						
Point No.	Source	Description	Data Point Identifier	Data Point Address	Signal	Type
25	S01A03-LS-101	Air Chamber S01A03-TK-AC1 LowLow Level			Discrete	Input
26	S01A03-LS-102	Air Chamber S01A03 TK-AC1 HighHigh Level			Discrete	Input
27	S01A03-LS-201	Air Chamber S01A03-TK-AC2 LowLow Level			Discrete	Input
28	S01A03-LS-202	Air Chamber S01A03-TK-AC2 HighHigh Level			Discrete	Input
29	S01A04-LS-301	Air Chamber S01A04-TK-AC3 LowLow Level			Discrete	Input
30	S01A04-LS-302	Air Chamber S01A04-TK-AC3 HighHigh Level			Discrete	Input
31	S01A04-LS-401	Air Chamber S01A04-TK-AC4 LowLow Level			Discrete	Input
32	S01A04-LS-402	Air Chamber S01A04-TK-AC4 HighHigh Level			Discrete	Input

Table 51 00 20A – Pumping Plant No. 1 I/O List						
Point No.	Source	Description	Data Point Identifier	Data Point Address	Signal	Type
33	Control System Cabinet	Control System Cabinet Door Open			Discrete	Input
34	Access Control System	Access Control System Intrusion Alarm			Discrete	Input
35	PP1 Fire Alarm Control Panel	Fire System Trouble			Discrete	Input
36	PP1 Fire Alarm Control Panel	Fire Alarm			Discrete	Input
37	Pumping Plant Building Temperature Sensor	Pumping Plant Building Ambient Temperature			Analog	Input
38	Automatic Transfer Switch	Automatic Transfer Switch, Normal			Discrete	Input
39	Automatic Transfer Switch	Automatic Transfer Switch, Emergency			Discrete	Input
40	Automatic Transfer Switch	Automatic Transfer Switch, Alarm			Discrete	Input
41	Emergency Generator	Emergency Generator Running			Discrete	Input
42	Emergency Generator	Emergency Generator Alarm			Discrete	Input
43	Generator Fuel Tank	Generator Fuel Oil Tank Level			Analog	Input

B. Pumping Plant No. 1 Digital Communication Protocol Point list:

Table 51 00 20B – Pumping Plant No. 1 Digital Protocol Point List						
Point No.	Source	Description	Data Point Identifier	Data Point Address	Protocol	Type
1	S01A02-MCE-101	Pump S01A02-P-U1 Start			Modbus	Output
2	S01A02-URS-101	Pump S01A02-P-U1 Stop			Modbus	Output
3	S01A02-MCE-101	Pump S01A02-P-U1 Auto			Modbus	Input
4	S01A02-MCE-101	Pump S01A02-P-U1 Interlocks Bypassed			Modbus	Input
5	S01A02-MCE-101	Pump S01A02-P-U1 Running			Modbus	Input
6	S01A02-MCE-101	Pump S01A02-P-U1 kWH			Modbus	Input
7	S01A02-MCE-101	Pump S01A02-P-U1 Voltage			Modbus	Input
8	S01A02-MCE-101	Pump S01A02-P-U1 Current (Amps)			Modbus	Input
9	S01A02-MCE-101	Pump S01A02-P-U1 RTD TE101			Modbus	Input
10	S01A02-MCE-101	Pump S01A02-P-U1 RTD TE102			Modbus	Input
11	S01A02-MCE-101	Pump S01A02-P-U1 MPR Trip			Modbus	Input

Table 51 00 20B – Pumping Plant No. 1 Digital Protocol Point List						
Point No.	Source	Description	Data Point Identifier	Data Point Address	Protocol	Type
12	S01A02-MCE-101	Pump S01A02-P-U1 MPR Over-temperature			Modbus	Input
13	S01A02-MCE-101	Pump S01A02-P-U1 MPR Relay Trouble Alarm			Modbus	Input
14	S01A02-MCE-101	Pump S01A02-P-U1 RVSS Fault			Modbus	Input
15	S01A02-MCE-101	Pump S01A02-P-U1 Bypass Contactor Status			Modbus	Input
16	S01A02-MCE-201	Pump S01A02-P-U2 Start			Modbus	Output
17	S01A02-MCE-201	Pump S01A02-P-U2 Stop			Modbus	Output
18	S01A02-MCE-201	Pump S01A02-P-U2 Auto			Modbus	Input
19	S01A02-MCE-201	Pump S01A02-P-U2 Interlocks Bypassed			Modbus	Input
20	S01A02-MCE-201	Pump S01A02-P-U2 Running			Modbus	Input
21	S01A02-MCE-201	Pump S01A02-P-U2 kWH			Modbus	Input
22	S01A02-MCE-201	Pump S01A02-P-U2 Voltage			Modbus	Input

Table 51 00 20B – Pumping Plant No. 1 Digital Protocol Point List						
Point No.	Source	Description	Data Point Identifier	Data Point Address	Protocol	Type
23	S01A02-MCE-201	Pump S01A02-P-U2 Current (Amps)			Modbus	Input
24	S01A02-MCE-201	Pump S01A02-P-U2 RTD TE201			Modbus	Input
25	S01A02-MCE-201	Pump S01A02-P-U2 RTD TE202			Modbus	Input
26	S01A02-MCE-201	Pump S01A02-P-U2 MPR Trip			Modbus	Input
27	S01A02-MCE-201	Pump S01A02-P-U2 MPR Over-temperature			Modbus	Input
28	S01A02-MCE-201	Pump S01A02-P-U2 MPR Relay Trouble Alarm			Modbus	Input
29	S01A02-MCE-201	Pump S01A02-P-U2 RVSS Fault			Modbus	Input
30	S01A02-MCE-201	Pump S01A02-P-U2 Bypass Contactor Status			Modbus	Input
31	S01A02-MCE-301	Pump S01A02-P-U3 Start			Modbus	Output
32	S01A02-MCE-301	Pump S01A02-P-U3 Stop			Modbus	Output
33	S01A02-MCE-301	Pump S01A02-P-U3 Auto			Modbus	Input

Table 51 00 20B – Pumping Plant No. 1 Digital Protocol Point List						
Point No.	Source	Description	Data Point Identifier	Data Point Address	Protocol	Type
34	S01A02-MCE-301	Pump S01A02-P-U3 Interlocks Bypassed			Modbus	Input
35	S01A02-MCE-301	Pump S01A02-P-U3 Running			Modbus	Input
36	S01A02-MCE-301	Pump S01A02-P-U3 kWH			Modbus	Input
37	S01A02-MCE-301	Pump S01A02-P-U3 Voltage			Modbus	Input
38	S01A02-MCE-301	Pump S01A02-P-U3 Current (amps)			Modbus	Input
39	S01A02-MCE-301	Pump S01A02-P-U3 RTD TE301			Modbus	Input
40	S01A02-MCE-301	Pump S01A02-P-U3 RTD TE302			Modbus	Input
41	S01A02-MCE-301	Pump S01A02-P-U3 MPR Trip			Modbus	Input
42	S01A02-MCE-301	Pump S01A02-P-U3 MPR Over-temperature			Modbus	Input
43	S01A02-MCE-301	Pump S01A02-P-U3 MPR Relay Trouble Alarm			Modbus	Input
44	S01A02-MCE-301	Pump S01A02-P-U3 RVSS Fault			Modbus	Input

Table 51 00 20B – Pumping Plant No. 1 Digital Protocol Point List						
Point No.	Source	Description	Data Point Identifier	Data Point Address	Protocol	Type
45	S01A02-MCE-301	Pump S01A02-P-U3 Bypass Contactor Status			Modbus	Input
46	S01A02-MCE-401	Pump S01A02-P-U4 Start			Modbus	Output
47	S01A02-MCE-401	Pump S01A02-P-U4 Stop			Modbus	Output
48	S01A02-MCE-401	Pump S01A02-P-U4 Auto			Modbus	Input
49	S01A02-MCE-401	Pump S01A02-P-U4 Interlocks Bypassed			Modbus	Input
50	S01A02-MCE-401	Pump S01A02-P-U4 Running			Modbus	Input
51	S01A02-MCE-401	Pump S01A02-P-U4 kWH			Modbus	Input
52	S01A02-MCE-401	Pump S01A02-P-U4 Voltage			Modbus	Input
53	S01A02-MCE-401	Pump S01A02-P-U4 Current (Amps)			Modbus	Input
54	S01A02-MCE-401	Pump S01A02-P-U4 RTD TE401			Modbus	Input
55	S01A02-MCE-401	Pump S01A02-P-U4 RTD TE402			Modbus	Input

Table 51 00 20B – Pumping Plant No. 1 Digital Protocol Point List						
Point No.	Source	Description	Data Point Identifier	Data Point Address	Protocol	Type
56	S01A02-MCE-401	Pump S01A02-P-U4 MPR Trip			Modbus	Input
57	S01A02-MCE-401	Pump S01A02-P-U4 MPR Over-temperature			Modbus	Input
58	S01A02-MCE-401	Pump S01A02-P-U4 MPR Relay Trouble Alarm			Modbus	Input
59	S01A02-MCE-401	Pump S01A02-P-U4 RVSS Fault			Modbus	Input
60	S01A02-MCE-401	Pump S01A02-P-U4 Bypass Contactor Status			Modbus	Input
61	S01A02-MCE-501	Pump S01A02-P-U5 Start			Modbus	Output
62	S01A02-MCE-501	Pump S01A02-P-U5 Stop			Modbus	Output
63	S01A02-MCE-501	Pump S01A02-P-U5 Auto			Modbus	Input
64	S01A02-MCE-501	Pump S01A02-P-U5 Interlocks Bypassed			Modbus	Input
65	S01A02-MCE-501	Pump S01A02-P-U5 Running			Modbus	Input
66	S01A02-MCE-501	Pump S01A02-P-U5 kWH			Modbus	Input

Table 51 00 20B – Pumping Plant No. 1 Digital Protocol Point List						
Point No.	Source	Description	Data Point Identifier	Data Point Address	Protocol	Type
67	S01A02-MCE-501	Pump S01A02-P-U5 Voltage			Modbus	Input
68	S01A02-MCE-501	Pump S01A02-P-U5 Current (Amps)			Modbus	Input
69	S01A02-MCE-501	Pump S01A02-P-U5 RTD TE501			Modbus	Input
70	S01A02-MCE-501	Pump S01A02-P-U5 RTD TE502			Modbus	Input
71	S01A02-MCE-501	Pump S01A02-P-U5 MPR Trip			Modbus	Input
72	S01A02-MCE-501	Pump S01A02-P-U5 MPR Over-temperature			Modbus	Input
73	S01A02-MCE-501	Pump S01A02-P-U5 MPR Relay Trouble Alarm			Modbus	Input
74	S01A02-MCE-501	Pump S01A02-P-U5 RVSS Fault			Modbus	Input
75	S01A02-MCE-501	Pump S01A02-P-U5 Bypass Contactor Status			Modbus	Input
76	S01A02-MCE-601	Pump S01A02-P-U6 Start			Modbus	Output
77	S01A02-MCE-601	Pump S01A02-P-U6 Stop			Modbus	Output

Table 51 00 20B – Pumping Plant No. 1 Digital Protocol Point List						
Point No.	Source	Description	Data Point Identifier	Data Point Address	Protocol	Type
78	S01A02-MCE-601	Pump S01A02-P-U6 Auto			Modbus	Input
79	S01A02-MCE-601	Pump S01A02-P-U6 Interlocks Bypassed			Modbus	Input
80	S01A02-MCE-601	Pump S01A02-P-U6 Running			Modbus	Input
81	S01A02-MCE-601	Pump S01A02-P-U6 kWH			Modbus	Input
82	S01A02-MCE-601	Pump S01A02-P-U6 Voltage			Modbus	Input
83	S01A02-MCE-601	Pump S01A02-P-U6 Current (Amps)			Modbus	Input
84	S01A02-MCE-601	Pump S01A02-P-U6 RTD TE601			Modbus	Input
85	S01A02-MCE-601	Pump S01A02-P-U6 RTD TE602			Modbus	Input
86	S01A02-MCE-601	Pump S01A02-P-U6 MPR Trip			Modbus	Input
87	S01A02-MCE-601	Pump S01A02-P-U6 MPR Over-temperature			Modbus	Input
88	S01A02-MCE-601	Pump S01A02-P-U6 MPR Relay Trouble Alarm			Modbus	Input

Table 51 00 20B – Pumping Plant No. 1 Digital Protocol Point List						
Point No.	Source	Description	Data Point Identifier	Data Point Address	Protocol	Type
89	S01A02-MCE-601	Pump S01A02-P-U6 RVSS Fault			Modbus	Input
90	S01A02-MCE-601	Pump S01A02-P-U6 Bypass Contactor Status			Modbus	Input
91	S01A02-MCE-701	Pump S01A02-P-U7 Start			Modbus	Output
92	S01A02-MCE-701	Pump S01A02-P-U7 Stop			Modbus	Output
93	S01A02-MCE-701	Pump S01A02-P-U7 Auto			Modbus	Input
94	S01A02-MCE-701	Pump S01A02-P-U7 Interlocks Bypassed			Modbus	Input
95	S01A02-MCE-701	Pump S01A02-P-U7 Running			Modbus	Input
96	S01A02-MCE-701	Pump S01A02-P-U7 kWH			Modbus	Input
97	S01A02-MCE-701	Pump S01A02-P-U7 Voltage			Modbus	Input
98	S01A02-MCE-701	Pump S01A02-P-U7 Current (Amps)			Modbus	Input
99	S01A02-MCE-701	Pump S01A02-P-U7 RTD TE701			Modbus	Input

Table 51 00 20B – Pumping Plant No. 1 Digital Protocol Point List						
Point No.	Source	Description	Data Point Identifier	Data Point Address	Protocol	Type
100	S01A02-MCE-701	Pump S01A02-P-U7 RTD TE702			Modbus	Input
101	S01A02-MCE-701	Pump S01A02-P-U7 MPR Trip			Modbus	Input
102	S01A02-MCE-701	Pump S01A02-P-U7 MPR Over-temperature			Modbus	Input
103	S01A02-MCE-701	Pump S01A02-P-U7 MPR Relay Trouble Alarm			Modbus	Input
104	S01A02-MCE-701	Pump S01A02-P-U7 RVSS Fault			Modbus	Input
105	S01A02-MCE-701	Pump S01A02-P-U7 Bypass Contactor Status			Modbus	Input
106	S01A02-MCE-001	MCE-001 kWH			Modbus	Input
107	S01A02-MCE-001	MCE-001 Current			Modbus	Input
108	S01A02-MCE-001	MCE-001 Amps			Modbus	Input
109	S01A02-MBV-U1-2	Valve S01A02-MBV-U1-2 Control			Modbus	Output
110	S01A02-MBV-U1-2	Valve S01A02-MBV-U1-2 Position			Modbus	Input
111	S01A02-MBV-U2-2	Valve S01A02-MBV-U2-2 Control			Modbus	Output

Table 51 00 20B – Pumping Plant No. 1 Digital Protocol Point List						
Point No.	Source	Description	Data Point Identifier	Data Point Address	Protocol	Type
112	S01A02-MBV-U2-2	Valve S01A02-MBV-U2-2 Position			Modbus	Input
113	S01A02-MBV-U3-2	Valve S01A02-MBV-U3-2 Control			Modbus	Output
114	S01A02-MBV-U3-2	Valve S01A02-MBV-U3-2 Position			Modbus	Input
115	S01A02-MBV-U4-2	Valve S01A02-MBV-U4-2 Control			Modbus	Output
116	S01A02-MBV-U4-2	Valve S01A02-MBV-U4-2 Position			Modbus	Input
117	S01A02-MBV-U5-2	Valve S01A02-MBV-U5-2 Control			Modbus	Output
118	S01A02-MBV-U5-2	Valve S01A02-MBV-U5-2 Position			Modbus	Input
119	S01A02-MBV-U6-2	Valve S01A02-MBV-U6-2 Control			Modbus	Output
120	S01A02-MBV-U6-2	Valve S01A02-MBV-U6-2 Position			Modbus	Input
121	S01A02-MBV-U7-2	Valve S01A02-MBFV-U7-2 Control			Modbus	Output
122	S01A02-MBV-U7-2	Valve S01A02-MBFV-U7-2 Position			Modbus	Input

Table 51 00 20B – Pumping Plant No. 1 Digital Protocol Point List						
Point No.	Source	Description	Data Point Identifier	Data Point Address	Protocol	Type
123	S01A02-FIT-001	Facility Flow FIT-001 Flow			Modbus	Input
124	S01A02-FIT-001	Facility Flow FIT-001 Flow Direction			Modbus	Input
125	S01A02-FIT-001	Facility Flow FIT-001 Flow Totalizer			Modbus	Input
126	S01A02-FIT-101	Flow Meter FIT-001 Flow			Modbus	Input
127	S01A02-FIT-101	Flow Meter S01A02-FIT -101 Flow Direction			Modbus	Input
128	S01A02-FIT-101	Flow Meter S01A02-FIT -101 Flow Totalizer			Modbus	Input
129	S01A02-FIT-201	Flow Meter S01A02-FIT-201 Flow			Modbus	Input
130	S01A02-FIT-201	Flow Meter S01A02-FIT-201 Flow Direction			Modbus	Input
131	S01A02-FIT-201	Flow Meter S01A02-FIT-201 Flow Totalizer			Modbus	Input
132	S01A02-FIT-301	Flow Meter S01A02-FIT-301 Flow			Modbus	Input
133	S01A02-FIT-301	Flow Meter S01A02-FIT-301 Flow Direction			Modbus	Input

Table 51 00 20B – Pumping Plant No. 1 Digital Protocol Point List						
Point No.	Source	Description	Data Point Identifier	Data Point Address	Protocol	Type
134	S01A02-FIT-301	Flow Meter S01A02-FIT-301 Flow Totalizer			Modbus	Input
135	S01A02-FIT-401	Flow Meter S01A02-FIT-401 Flow			Modbus	Input
136	S01A02-FIT-401	Flow Meter S01A02-FIT-401 Flow Direction			Modbus	Input
137	S01A02-FIT-401	Flow Meter S01A02-FIT-401 Flow Totalizer			Modbus	Input
138	S01A02-FIT-501	Flow Meter S01A02-FIT-501 Flow			Modbus	Input
139	S01A02-FIT-501	Flow Meter S01A02-FIT-501 Flow Direction			Modbus	Input
140	S01A02-FIT-501	Flow Meter S01A02-FIT-501 Flow Totalizer			Modbus	Input
141	S01A02-FIT-601	Flow Meter S01A02-FIT-601 Flow			Modbus	Input
142	S01A02-FIT-601	Flow Meter S01A02-FIT-601 Flow Direction			Modbus	Input
143	S01A02-FIT-601	Flow Meter S01A02-FIT-601 Flow Totalizer			Modbus	Input
144	S01A03-LC-001	Air Compressor S01A03-C-101 Running			Modbus	Input

Table 51 00 20B – Pumping Plant No. 1 Digital Protocol Point List						
Point No.	Source	Description	Data Point Identifier	Data Point Address	Protocol	Type
145	S01A03-LC-001	Air Compressor S01A03-C-101 In Auto			Modbus	Input
146	S01A03-LC-001	Air Compressor S01A03-C-201 Running			Modbus	Input
147	S01A03-LC-001	Air Compressor S01A03-C-201 In Auto			Modbus	Input
148	S01A03-LC-001	Pumping Plant Intake Air Chambers Air Release Alarm			Modbus	Input
149	S01A03-LC-001	Pumping Plant Intake Air Chambers Emergency Off Alarm			Modbus	Input
150	S01A03-LC-001	Pumping Plant Intake Air Chambers Level			Modbus	Input
151	S01A03-LC-001	Pumping Plant Discharge Air Chambers Air Release Alarm			Modbus	Input
152	S01A04-LC-002	Air Compressor S01A04-C-301 In Auto			Modbus	Input
153	S01A04-LC-002	Air Compressor S01A04-C-401 Running			Modbus	Input

Table 51 00 20B – Pumping Plant No. 1 Digital Protocol Point List						
Point No.	Source	Description	Data Point Identifier	Data Point Address	Protocol	Type
154	S01A04-LC-002	Air Compressor S01A04-C-401 In Auto			Modbus	Input
155	S01A03-LC-002	Pumping Plant Discharge Air Chambers Air Release Alarm			Modbus	Input
156	S01A03-LC-002	Pumping Plant Discharge Air Chambers Emergency Off Alarm			Modbus	Input
157	S01A03-LC-002	Pumping Plant Discharge Air Chambers Level			Modbus	Input
158	S01A01-SWGR-001	Switchgear VCB-001 Relay RLY-001 Trip			Modbus	Input
159	S01A01-SWGR-001	Switchgear VCB-001 Relay RLY-001 Trouble Alarm			Modbus	Input
160	S01A01-SWGR-001	Switchgear VCB-001 Relay RLY-001 Current (Amps)			Modbus	Input
161	S01A01-SWGR-001	Switchgear VCB-002 Relay RLY-002 Trip			Modbus	Input

Table 51 00 20B – Pumping Plant No. 1 Digital Protocol Point List						
Point No.	Source	Description	Data Point Identifier	Data Point Address	Protocol	Type
162	S01A01-SWGR-001	Switchgear VCB-002 Relay RLY-002 Relay Trouble Alarm			Modbus	Input
163	S01A01-SWGR-001	Switchgear VCB-002 Relay RLY-002 Current (Amps)			Modbus	Input
164	S01A01-SWGR-001	Switchgear VCB-003 Relay RLY-003 Trip			Modbus	Input
165	S01A01-SWGR-001	Switchgear VCB-003 Relay RLY-003 Relay Trouble Alarm			Modbus	Input
166	S01A01-SWGR-001	Switchgear VCB-003 Relay RLY-003 Current (Amps)			Modbus	Input
167	S01A02-SWBD-001	Switchboard S01A02-SWBD-001 Bus KWH			Modbus	Input
168	S01A02-SWBD-001	Switchboard S01A02-SWBD-001 Bus Voltage			Modbus	Input
169	S01A02-SWBD-001	Switchboard S01A02-SWBD-001 Bus Current (Amps)			Modbus	Input

C. Remote Interface Point list:

Table 51 00 20C – Pumping Plant No. 1 Remote Interface Point List						
Point No.	Remote System	Description	Data Point Identifier	Data Point Address	Protocol	Type
1	San Juan Lateral Water Treatment Plant	SCADA System in Local			DNP3	Output
2	San Juan Lateral Water Treatment Plant	SCADA System in Remote			DNP3	Output
3	San Juan Lateral Water Treatment Plant	Air Chamber S01A03-TK-AC1 Alarm			DNP3	Output
4	San Juan Lateral Water Treatment Plant	Air Chamber S01A03-TK-AC2 Alarm			DNP3	Output
5	San Juan Lateral Water Treatment Plant	Air Chamber S01A04-TK-AC3 Alarm			DNP3	Output
6	San Juan Lateral Water Treatment Plant	Air Chamber S01A04-TK-AC4 Alarm			DNP3	Output
7	San Juan Lateral Water Treatment Plant	Pump S01A02-P-U1 Suction Pressure Low			DNP3	Output
8	San Juan Lateral Water Treatment Plant	Pump S01A02-P-U1 Discharge Pressure Switch			DNP3	Output

Table 51 00 20C – Pumping Plant No. 1 Remote Interface Point List						
Point No.	Remote System	Description	Data Point Identifier	Data Point Address	Protocol	Type
9	San Juan Lateral Water Treatment Plant	Pump S01A02-P-U2 Suction Pressure Low			DNP3	Output
10	San Juan Lateral Water Treatment Plant	Pump S01A02-P-U2 Discharge Pressure Switch			DNP3	Output
11	San Juan Lateral Water Treatment Plant	Pump S01A02-P-U3 Suction Pressure Low			DNP3	Output
12	San Juan Lateral Water Treatment Plant	Pump S01A02-P-U3 Discharge Pressure Switch			DNP3	Output
13	San Juan Lateral Water Treatment Plant	Pump S01A02-P-U4 Suction Pressure Low			DNP3	Output
14	San Juan Lateral Water Treatment Plant	Pump S01A02-P-U4 Discharge Pressure Switch			DNP3	Output
15	San Juan Lateral Water Treatment Plant	Pump S01A02-P-U5 Suction Pressure Low			DNP3	Output
16	San Juan Lateral Water Treatment Plant	Pump S01A02-P-U5 Discharge Pressure Switch			DNP3	Output

Table 51 00 20C – Pumping Plant No. 1 Remote Interface Point List						
Point No.	Remote System	Description	Data Point Identifier	Data Point Address	Protocol	Type
17	San Juan Lateral Water Treatment Plant	Pump S01A02-P-U6 Suction Pressure Low			DNP3	Output
18	San Juan Lateral Water Treatment Plant	Pump S01A02-P-U6 Discharge Pressure Switch			DNP3	Output
19	San Juan Lateral Water Treatment Plant	Pump S01A02-P-U7 Suction Pressure Low			DNP3	Output
20	San Juan Lateral Water Treatment Plant	Pump S01A02-P-U7 Discharge Pressure Switch			DNP3	Output
21	San Juan Lateral Water Treatment Plant	Pump S01A02-P-U1 Auto			DNP3	Output
22	San Juan Lateral Water Treatment Plant	Pump S01A02-P-U1 Interlocks Bypassed			DNP3	Output
23	San Juan Lateral Water Treatment Plant	Pump S1A302-P-U1 RVSS Fault			DNP3	Output
24	San Juan Lateral Water Treatment Plant	Pump S01A02-P-U1 Bypass Contactor Status			DNP3	Output

Table 51 00 20C – Pumping Plant No. 1 Remote Interface Point List						
Point No.	Remote System	Description	Data Point Identifier	Data Point Address	Protocol	Type
25	San Juan Lateral Water Treatment Plant	Pump S01A02-P-U1 Running			DNP3	Output
26	San Juan Lateral Water Treatment Plant	Pump S01A02-P-U2 Auto			DNP3	Output
27	San Juan Lateral Water Treatment Plant	Pump S01A02-P-U2 Interlocks Bypassed			DNP3	Output
28	San Juan Lateral Water Treatment Plant	Pump S01A02-P-U2 RVSS Fault			DNP3	Output
29	San Juan Lateral Water Treatment Plant	Pump S01A02-P-U2 Bypass Contactor Status			DNP3	Output
30	San Juan Lateral Water Treatment Plant	Pump S01A02-P-U2 Running			DNP3	Output
31	San Juan Lateral Water Treatment Plant	Pump S01A02-P-U3 Auto			DNP3	Output
32	San Juan Lateral Water Treatment Plant	Pump S01A02-P-U3 Interlocks Bypassed			DNP3	Output

Table 51 00 20C – Pumping Plant No. 1 Remote Interface Point List						
Point No.	Remote System	Description	Data Point Identifier	Data Point Address	Protocol	Type
33	San Juan Lateral Water Treatment Plant	Pump S01A02-P-U3 RVSS Fault			DNP3	Output
34	San Juan Lateral Water Treatment Plant	Pump S01A02-P-U3 Bypass Contactor Status			DNP3	Output
35	San Juan Lateral Water Treatment Plant	Pump S01A02-P-U3 Running			DNP3	Output
36	San Juan Lateral Water Treatment Plant	Pump S01A02-P-U4 Auto			DNP3	Output
37	San Juan Lateral Water Treatment Plant	Pump S01A02-P-U4 Interlocks Bypassed			DNP3	Output
38	San Juan Lateral Water Treatment Plant	Pump S01A02-P-U4 RVSS Fault			DNP3	Output
39	San Juan Lateral Water Treatment Plant	Pump S01A02-P-U4 Bypass Contactor Status			DNP3	Output
40	San Juan Lateral Water Treatment Plant	Pump S01A02-P-U4 Running			DNP3	Output

Table 51 00 20C – Pumping Plant No. 1 Remote Interface Point List						
Point No.	Remote System	Description	Data Point Identifier	Data Point Address	Protocol	Type
41	San Juan Lateral Water Treatment Plant	Pump S01A02-P-U5 Auto			DNP3	Output
42	San Juan Lateral Water Treatment Plant	Pump S01A02-P-U5 Interlocks Bypassed			DNP3	Output
43	San Juan Lateral Water Treatment Plant	Pump S01A02-P-U5 RVSS Fault			DNP3	Output
44	San Juan Lateral Water Treatment Plant	Pump S01A02-P-U5 Bypass Contactor Status			DNP3	Output
45	San Juan Lateral Water Treatment Plant	Pump S01A02-P-U5 Running			DNP3	Output
46	San Juan Lateral Water Treatment Plant	Pump S01A02-P-U6 Auto			DNP3	Output
47	San Juan Lateral Water Treatment Plant	Pump S01A02-P-U6 Interlocks Bypassed			DNP3	Output
48	San Juan Lateral Water Treatment Plant	Pump S01A02-P-U6 RVSS Fault			DNP3	Output

Table 51 00 20C – Pumping Plant No. 1 Remote Interface Point List						
Point No.	Remote System	Description	Data Point Identifier	Data Point Address	Protocol	Type
49	San Juan Lateral Water Treatment Plant	Pump S01A02-P-U6 Bypass Contactor Status			DNP3	Output
50	San Juan Lateral Water Treatment Plant	Pump S01A02-P-U6 Running			DNP3	Output
51	San Juan Lateral Water Treatment Plant	Pump S01A02-P-U7 Auto			DNP3	Output
52	San Juan Lateral Water Treatment Plant	Pump S01A02-P-U7 Interlocks Bypassed			DNP3	Output
53	San Juan Lateral Water Treatment Plant	Pump S01A02-P-U7 RVSS Fault			DNP3	Output
54	San Juan Lateral Water Treatment Plant	Pump S01A02-P-U7 Bypass Contactor Status			DNP3	Output
55	San Juan Lateral Water Treatment Plant	Pump S01A02-P-U7 Running			DNP3	Output
56	San Juan Lateral Water Treatment Plant	S01A02 Discharge Header Pressure			DNP3	Output

Table 51 00 20C – Pumping Plant No. 1 Remote Interface Point List						
Point No.	Remote System	Description	Data Point Identifier	Data Point Address	Protocol	Type
57	San Juan Lateral Water Treatment Plant	Flow Meter S01A01-FIT-001 Flow				
58	San Juan Lateral Water Treatment Plant	Flow Meter S01A01-FIT-001 Flow Direction				
59	San Juan Lateral Water Treatment Plant	Flow Meter S01A01-FIT-001 Flow Totalizer				
60	San Juan Lateral Water Treatment Plant	Flow Meter S01A02-FIT-101 Flow			DNP3	Output
61	San Juan Lateral Water Treatment Plant	Flow Meter S01A02-FIT-101 Flow Direction			DNP3	Output
62	San Juan Lateral Water Treatment Plant	Flow Meter S01A02-FIT-101 Flow Totalizer			DNP3	Output
63	San Juan Lateral Water Treatment Plant	Flow Meter S01A02-FIT-201 Flow			DNP3	Output
64	San Juan Lateral Water Treatment Plant	Flow Meter S01A02-FIT-201 Flow Direction			DNP3	Output

Table 51 00 20C – Pumping Plant No. 1 Remote Interface Point List						
Point No.	Remote System	Description	Data Point Identifier	Data Point Address	Protocol	Type
65	San Juan Lateral Water Treatment Plant	Flow Meter S01A02-FIT-201 Flow Totalizer			DNP3	Output
66	San Juan Lateral Water Treatment Plant	Flow Meter S01A02-FIT -301 Flow			DNP3	Output
67	San Juan Lateral Water Treatment Plant	Flow Meter S01A02-FIT -301 Flow Direction			DNP3	Output
68	San Juan Lateral Water Treatment Plant	Flow Meter S01A02-FIT -301 Flow Totalizer			DNP3	Output
69	San Juan Lateral Water Treatment Plant	Flow Meter S01A02-FIT -401 Flow			DNP3	Output
70	San Juan Lateral Water Treatment Plant	Flow Meter S01A02-FIT -401 Flow Direction			DNP3	Output
71	San Juan Lateral Water Treatment Plant	Flow Meter S01A02-FIT -401 Flow Totalizer			DNP3	Output
72	San Juan Lateral Water Treatment Plant	Flow Meter S01A02-FIT -501 Flow			DNP3	Output

Table 51 00 20C – Pumping Plant No. 1 Remote Interface Point List						
Point No.	Remote System	Description	Data Point Identifier	Data Point Address	Protocol	Type
73	San Juan Lateral Water Treatment Plant	Flow Meter S01A02-FIT -501 Flow Direction			DNP3	Output
74	San Juan Lateral Water Treatment Plant	Flow Meter S01A02-FIT -501 Flow Totalizer			DNP3	Output
75	San Juan Lateral Water Treatment Plant	Flow Meter S01A02-FIT -601 Flow			DNP3	Output
76	San Juan Lateral Water Treatment Plant	Flow Meter S01A02-FIT -601 Flow Direction			DNP3	Output
77	San Juan Lateral Water Treatment Plant	Flow Meter S01A02-FIT -601 Flow Totalizer			DNP3	Output
78	San Juan Lateral Water Treatment Plant	Air Chamber S01A03-TK-AC1 LowLow Level			DNP3	Output
79	San Juan Lateral Water Treatment Plant	Air Chamber S01A03-TK-AC1 HighHigh Level			DNP3	Output
80	San Juan Lateral Water Treatment Plant	Air Chamber S01A03-TK-AC2 LowLow Level			DNP3	Output

Table 51 00 20C – Pumping Plant No. 1 Remote Interface Point List						
Point No.	Remote System	Description	Data Point Identifier	Data Point Address	Protocol	Type
81	San Juan Lateral Water Treatment Plant	Air Chamber S01A03-TK-AC2 HighHigh Level			DNP3	Output
82	San Juan Lateral Water Treatment Plant	Air Chamber S01A04-TK-AC3 LowLow Level			DNP3	Output
83	San Juan Lateral Water Treatment Plant	Air Chamber S01A04-TK-AC3 HighHigh Level			DNP3	Output
84	San Juan Lateral Water Treatment Plant	Air Chamber S01A04-TK-AC4 LowLow Level			DNP3	Output
85	San Juan Lateral Water Treatment Plant	Air Chamber S01A04-TK-AC4 HighHigh Level			DNP3	Output
86	San Juan Lateral Water Treatment Plant	SCADA Cabinet Door Open			DNP3	Output
87	San Juan Lateral Water Treatment Plant	Intrusion Alarm			DNP3	Output
88	San Juan Lateral Water Treatment Plant	Fire System Trouble			DNP3	Output

Table 51 00 20C – Pumping Plant No. 1 Remote Interface Point List						
Point No.	Remote System	Description	Data Point Identifier	Data Point Address	Protocol	Type
89	San Juan Lateral Water Treatment Plant	Fire Alarm			DNP3	Output
90	San Juan Lateral Water Treatment Plant	Pumping Plant Building Temperature			DNP3	Output
91	San Juan Lateral Water Treatment Plant	Pumping Plant SCADA System Trouble			DNP3	Output
92	San Juan Lateral Water Treatment Plant	Valve S01A02-MBV-U1-2 Open			DNP3	Output
93	San Juan Lateral Water Treatment Plant	Valve S01A02-MBV-U1-2 Closed			DNP3	Output
94	San Juan Lateral Water Treatment Plant	Valve S01A02-MBV-U2-2 Open			DNP3	Output
95	San Juan Lateral Water Treatment Plant	Valve S01A02-MBV-U2-2 Closed			DNP3	Output
96	San Juan Lateral Water Treatment Plant	Valve S01A02-MBV-U3-2 Open			DNP3	Output

Table 51 00 20C – Pumping Plant No. 1 Remote Interface Point List						
Point No.	Remote System	Description	Data Point Identifier	Data Point Address	Protocol	Type
97	San Juan Lateral Water Treatment Plant	Valve S01A02-MBV-U3-2 Closed			DNP3	Output
98	San Juan Lateral Water Treatment Plant	Valve S01A02-MBV-U4-2 Open			DNP3	Output
99	San Juan Lateral Water Treatment Plant	Valve S01A02-MBV-U4-2 Closed			DNP3	Output
100	San Juan Lateral Water Treatment Plant	Valve S01A02-MBV-U5-2 Open			DNP3	Output
101	San Juan Lateral Water Treatment Plant	Valve S01A02-MBV-U5-2 Closed			DNP3	Output
102	San Juan Lateral Water Treatment Plant	Valve S01A02-MBV-U6-2 Open			DNP3	Output
103	San Juan Lateral Water Treatment Plant	Valve S01A02-MBV-U6-2 Closed			DNP3	Output
104	San Juan Lateral Water Treatment Plant	Valve S01A02-MBV-U7-2 Open			DNP3	Output

Table 51 00 20C – Pumping Plant No. 1 Remote Interface Point List						
Point No.	Remote System	Description	Data Point Identifier	Data Point Address	Protocol	Type
105	San Juan Lateral Water Treatment Plant	Valve S01A02-MBV-U7-2 Closed			DNP3	Output
106	San Juan Lateral Water Treatment Plant	Switchgear UXA Alarm			DNP3	Output
107	San Juan Lateral Water Treatment Plant	Switchboard DCA PM2 Bus KWH			DNP3	Output
108	San Juan Lateral Water Treatment Plant	Switchboard DCA PM2 Bus Voltage			DNP3	Output
109	San Juan Lateral Water Treatment Plant	Switchboard DCA PM2 Bus Current (Amps)			DNP3	Output
110	San Juan Lateral Water Treatment Plant	Switchboard DCA Alarm			DNP3	Output
111	San Juan Lateral Water Treatment Plant	4.16kV Motor Control Equipment MCE PM1 Bus KWH			DNP3	Output
112	San Juan Lateral Water Treatment Plant	4.16kV Motor Control Equipment MCE PM1 Bus Voltage			DNP3	Output

Table 51 00 20C – Pumping Plant No. 1 Remote Interface Point List						
Point No.	Remote System	Description	Data Point Identifier	Data Point Address	Protocol	Type
113	San Juan Lateral Water Treatment Plant	4.16kV Motor Control Equipment MCE PM1 Bus Current (Amps)			DNP3	Output
114	San Juan Lateral Water Treatment Plant	MCC Pump S01A02-P-U1 Alarm			DNP3	Output
115	San Juan Lateral Water Treatment Plant	MCC Pump S01A02-P-U2 Alarm			DNP3	Output
116	San Juan Lateral Water Treatment Plant	MCC Pump S01A02-P-U3 Alarm			DNP3	Output
117	San Juan Lateral Water Treatment Plant	MCC Pump S01A02-P-U4 Alarm			DNP3	Output
118	San Juan Lateral Water Treatment Plant	MCC Pump S01A02-P-U5 Alarm			DNP3	Output
119	San Juan Lateral Water Treatment Plant	MCC Pump S01A02-P-U6 Alarm			DNP3	Output
120	San Juan Lateral Water Treatment Plant	MCC Pump S01A02-P-U7 Alarm			DNP3	Output

Table 51 00 20C – Pumping Plant No. 1 Remote Interface Point List						
Point No.	Remote System	Description	Data Point Identifier	Data Point Address	Protocol	Type
121	San Juan Lateral Water Treatment Plant	Automatic Transfer Switch, Normal			DNP3	Output
122	San Juan Lateral Water Treatment Plant	Automatic Transfer Switch, Emergency			DNP3	Output
123	San Juan Lateral Water Treatment Plant	Automatic Transfer Switch, Alarm			DNP3	Output
124	San Juan Lateral Water Treatment Plant	Emergency Generator Running			DNP3	Output
125	San Juan Lateral Water Treatment Plant	Emergency Generator Alarm			DNP3	Output
126	San Juan Lateral Water Treatment Plant	Pumping Plant Automatic Operation			DNP3	Input
127	San Juan Lateral Water Treatment Plant	Pumping Plant Manual Operation			DNP3	Input
128	San Juan Lateral Water Treatment Plant	Start Pumping Plant Automatic Operation			DNP3	Input

Table 51 00 20C – Pumping Plant No. 1 Remote Interface Point List						
Point No.	Remote System	Description	Data Point Identifier	Data Point Address	Protocol	Type
129	San Juan Lateral Water Treatment Plant	Stop Pumping Plant Automatic Operation			DNP3	Input
130	San Juan Lateral Water Treatment Plant	Start Pump S01A02-P-U1			DNP3	Input
131	San Juan Lateral Water Treatment Plant	Stop Pump S01A02-P-U1			DNP3	Input
132	San Juan Lateral Water Treatment Plant	Open Valve S01A02-MBV-U1-2			DNP3	Input
133	San Juan Lateral Water Treatment Plant	Close Valve S01A02-MBV-U1-2			DNP3	Input
134	San Juan Lateral Water Treatment Plant	Start Pump S01A02-P-U2			DNP3	Input
135	San Juan Lateral Water Treatment Plant	Stop Pump S01A02-P-U2			DNP3	Input
136	San Juan Lateral Water Treatment Plant	Open Valve S01A02-MBV-U2-2			DNP3	Input

Table 51 00 20C – Pumping Plant No. 1 Remote Interface Point List						
Point No.	Remote System	Description	Data Point Identifier	Data Point Address	Protocol	Type
137	San Juan Lateral Water Treatment Plant	Close Valve S01A02-MBV-U2-2			DNP3	Input
138	San Juan Lateral Water Treatment Plant	Start Pump S01A02-P-U3			DNP3	Input
139	San Juan Lateral Water Treatment Plant	Stop Pump S01A02-P-U3			DNP3	Input
140	San Juan Lateral Water Treatment Plant	Open Valve S01A02-MBV-U3-2			DNP3	Input
141	San Juan Lateral Water Treatment Plant	Close Valve S01A02-MBV-U3-2			DNP3	Input
142	San Juan Lateral Water Treatment Plant	Start Pump S01A02-P-U4			DNP3	Input
143	San Juan Lateral Water Treatment Plant	Stop Pump S01A02-P-U4			DNP3	Input
144	San Juan Lateral Water Treatment Plant	Open Valve S01A02-MBV-U4-2			DNP3	Input

Table 51 00 20C – Pumping Plant No. 1 Remote Interface Point List						
Point No.	Remote System	Description	Data Point Identifier	Data Point Address	Protocol	Type
145	San Juan Lateral Water Treatment Plant	Close Valve S01A02-MBV-U4-2			DNP3	Input
146	San Juan Lateral Water Treatment Plant	Start Pump S01A02-P-U5			DNP3	Input
147	San Juan Lateral Water Treatment Plant	Stop Pump S01A02-P-U5			DNP3	Input
148	San Juan Lateral Water Treatment Plant	Open Valve S01A02-MBV-U5-2			DNP3	Input
149	San Juan Lateral Water Treatment Plant	Close Valve S01A02-MBV-U5-2			DNP3	Input
150	San Juan Lateral Water Treatment Plant	Start Pump S01A02-P-U6			DNP3	Input
151	San Juan Lateral Water Treatment Plant	Stop Pump S01A02-P-U6			DNP3	Input
152	San Juan Lateral Water Treatment Plant	Open Valve S01A02-MBV-U6-2			DNP3	Input

Table 51 00 20C – Pumping Plant No. 1 Remote Interface Point List						
Point No.	Remote System	Description	Data Point Identifier	Data Point Address	Protocol	Type
153	San Juan Lateral Water Treatment Plant	Close Valve S01A02-MBV-U6-2			DNP3	Input
154	San Juan Lateral Water Treatment Plant	Start Pump S01A02-P-U7			DNP3	Input
155	San Juan Lateral Water Treatment Plant	Stop Pump S01A02-P-U7			DNP3	Input
156	San Juan Lateral Water Treatment Plant	Open Valve S01A02-MBV-U7-2			DNP3	Input
157	San Juan Lateral Water Treatment Plant	Close Valve S01A02-MBV-U7-2			DNP3	Input
158	San Juan Lateral Water Treatment Plant	Morgan Lake Tank Level			DNP3	Input

PART 2 PRODUCTS

Not Used

PART 3 EXECUTION

Not Used

END OF SECTION

SECTION 51 00 35

SITE SPECIFIC REVEGETATION PLAN

PART 1 GENERAL

1.01 PROJECT CONDITIONS

A. Where there are differences as determined by CO between details shown on diagrams and details of existing features at jobsite, use details of existing features at jobsite.

1.02 SITE SPECIFIC REVEGETATION PLAN FOR NAVAJO - GALLUP WATER SUPPLY PROJECT

This page intentionally left blank.

BUREAU OF RECLAMATION

Site-Specific Revegetation Plan for Reaches 1, 2, 3, 4A & 4B and Pumping Plants 1, 2 & 3 and the San Juan Lateral Water Treatment Plant of the Navajo-Gallup Water Supply Project

Navajo-Gallup Water Supply Project, New Mexico
Interior Region 7, Upper Colorado Basin

prepared by

Eric Creeden, General Biologist, Western Colorado Area Office

Cover Photo: Example landscape on Reach 4A (Ecosystem Management, Inc.)

U.S. Department of the Interior **January 2022**

Mission Statements

The Department of the Interior conserves and manages the Nation's natural resources and cultural heritage for the benefit and enjoyment of the American people, provides scientific and other information about natural resources and natural hazards to address societal challenges and create opportunities for the American people, and honors the Nation's trust responsibilities or special commitments to American Indians, Alaska Natives, and affiliated island communities to help them prosper.

The mission of the Bureau of Reclamation is to manage, develop, and protect water and related resources in an environmentally and economically sound manner in the interest of the American public.

The mission of the Bureau of Indian Affairs is to enhance the quality of life, to promote economic opportunity, and to carry out the responsibility to protect and improve the trust assets of American Indians, Indian tribes, and Alaska Natives.

The mission of the Navajo Nation Division of Natural Resources is to manage, protect, conserve and preserve the Navajo Nation's natural and cultural resources for the benefit of the Navajo people.

Contents

Page

1. Introduction 1
2. Goals 1
3. Project Description 1
3.1 Reaches 1, 2, 3, 4A & 4B Pipeline ROW 4
3.2 Pumping Plants 1, 2 and 3 4
3.3 Reach 4B Staging Areas 4
3.4 San Juan Lateral Water Treatment Plant 4
4. Site Conditions 5
4.1 Vegetation Communities 5
4.1.1 Desert Scrub Grasslands 5
4.1.2 Grasslands 5
4.1.3 Desert Flats 6
4.1.4 Riparian 6
4.2 Noxious Weeds 6
4.3 Pre-Disturbance Photographs 6
5. Revegetation Workflow 10
5.1 Site Evaluation (Contractor) 10
5.2 Soil Testing and Amendment 10
5.3 Site Preparation 10
5.4 Erosion Control and Stormwater Management 11
5.5 Reseeding 11
5.5.1 Seed Mixes 12
5.5.2 Mulching 13
5.6 Fencing 14
5.7 Noxious and Invasive Weed Monitoring and Management 14
6. Monitoring and Reporting 14
6.1 Noxious and Invasive Weeds 14
6.2 Revegetation 14
6.2.1 Vegetation Transects 15
6.2.2 Photo Points 15
7. Adaptive Management 15
8. Appendices 16
8.1 Appendix A. BLM FFO 2013 Bare Soil Reclamation Procedures: Recommendations for Effective Reclamation 16
8.2 Appendix B. BLM FFO 2013 Bare Soil Reclamation Procedures: Applicable Menu Based Seed Mixes 19
8.3 Appendix C. Navajo Nation/BIA NGWSP Recommended Seed Species for Bare Soils/Invasive Weed Infested Sites 23

1. Introduction

This site-specific revegetation plan for Reaches 1, 2, 3, 4A & 4B and Pumping Plants 1, 2 & 3 and the San Juan Lateral Water Treatment Plant of the Navajo-Gallup Water Supply Project (NGWSP) has been prepared by the Bureau of Reclamation (Reclamation). This revegetation plan will be used in conjunction with input from cooperating agencies and the project's contractor(s) to develop strategies for the successful revegetation and reclamation of the project.

2. Goals

The short-term goal of project reclamation is to achieve the short-term stability, visual, hydrological, and productivity objectives of the surface management agency. The long-term goal of project reclamation is to restore the character and productivity of the land and set the course for eventual ecosystem restoration, including the restoration of a natural and diverse vegetation community, hydrologic stability, and functional habitat.

The goal of revegetation is to meet 70% of the pre-construction vegetative cover or better with 3 years of reseeding. If pre-disturbance vegetative cover is below 25%, the goal of revegetation is to meet pre-disturbance levels.

3. Project Description

Reaches 1, 2, 3, 4A & 4B of the NGWSP are located in the southwest corner of San Juan County, New Mexico generally from the community of Sanostee and roughly parallel to Highway 491 northward towards Kirtland, New Mexico and the San Juan Generating Station. Pumping plant 1 is located at the junction of Reaches 1 and 2, Pumping Plant 2 is located at the junction of Reaches 4A and 4B, and Pumping Plant 3 is located at the southern terminus of Reach 4B. The San Juan Lateral Water Treatment Plant is located at the junction of Reaches 3 and 4A. Table 1, below, describes the size of these project areas.

Table 1. Project Area Breakdown

Project Area	Acres	Notes
Reach 1 Pipeline Right-of-Way (ROW)	2.8	Approximately 0.2 mile of pipeline in 100- to 150-foot-wide ROW. Construction anticipated 2024-2026.
Reach 2 Pipeline ROW	89.2	Approximately 5.1 miles of pipeline in 100- to 150-foot-wide ROW. Construction anticipated 2024-2026.
Reach 3 Pipeline ROW	163.3	Approximately 8.6 miles of pipeline in 100- to 150-foot-wide ROW. Construction anticipated 2024-2026.
Reach 4A Pipeline ROW	127.3	Approximately 7.0 miles of pipeline in 100- to 150-foot-wide ROW. Construction anticipated 2022-2024.
Reach 4B Pipeline ROW	195.0	Approximately 10.9 miles of pipeline in 100- to 150-foot-wide ROW. Construction anticipated 2022-2024.
Reach 4B Staging Areas	18.8	Two staging areas Construction anticipated 2022-2024.
Pumping Plant 1	4.0	Construction anticipated 2025-2027
Pumping Plant 2	4.0	Construction anticipated 2022-2025
Pumping Plant 3	4.6	Construction anticipated 2022-2025
San Juan Lateral Water Treatment Plant	Up to 50	Construction anticipated 2025-2028

Map 1, below, shows the general location of the project area.

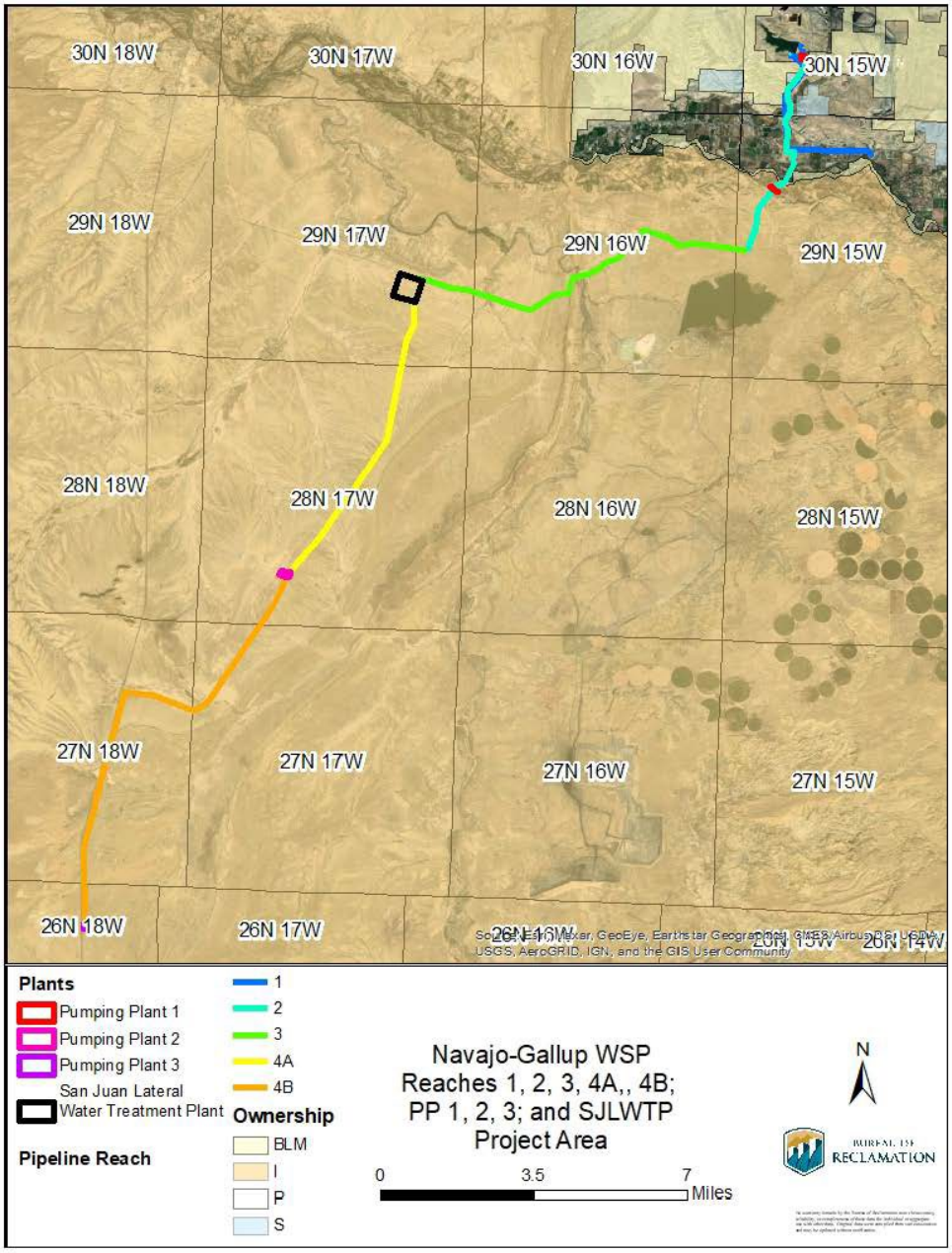

Map 1. Overview Map of Project Area

3

3.1 Reaches 1, 2, 3, 4A & 4B Pipeline ROW

Reaches 1, 2, 3, 4A & 4B consist of approximately 31.8 miles of water pipeline ROW generally between 100 and 150 feet in width. Various areas of the ROW have been constricted for avoidance of cultural resources, and multiple areas of horizontal direction drilling and jack and boring are proposed avoid disturbances to rivers, washes, roadways, pipelines and other infrastructure, and cultural areas. The entirety of the project south of the San Juan River is on Navajo Nation Tribal Trust lands. The San Juan River valley is comprised of multiple private landowners as well as NMDOT and San Juan County road ROWs. North of the San Juan River valley includes private landowners, Bureau of Land Management lands, and lands managed by the New Mexico State Lands Office.

Project construction of pipelines is scheduled for 2022 through 2026. Approximately 578 acres of pipeline ROW will be cleared and grubbed of vegetation for construction. The pipeline will be constructed and the ROW will be recontoured with topsoil respread and prepared for revegetation.

3.2 Pumping Plants 1, 2 and 3

Pumping Plant 1 is located at the junction of Reaches 1 and 2, Pumping Plant 2 is located at the junction of Reaches 4A & 4B, and Pumping Plant 3 is located at the southern terminus of Reach 4B. Construction of Pumping Plant 1 is planned for 2025-2027, and Pumping Plants 2 & 3 are planned for construction from 2022 through 2025. Approximately 12.6 acres will be cleared during initial construction of the pumping plants with approximately 3-4 acres reclaimed after construction.

3.3 Reach 4B Staging Areas

Two staging areas approximating 18.8 acres would be used during construction of Reaches 4A and 4B. One staging area is located directly west of Pumping Plant 2 and the other staging area is located to the south and where the pipeline alignment takes a 90-degree bend to the east and leaves the U.S. Highway 491 corridor.

3.4 San Juan Lateral Water Treatment Plant

A 180-acre site just south of Navajo Route N36 was identified for the location of the water treatment plant, and construction of the plant is anticipated to disturb no more than 100 acres of the site. Phase 1 project work would occur in an approximately 1,800-foot-long by 1,000-foot-wide area (41.3 acres). The footprint of Phase 2 at full buildout is anticipated to be slightly larger than at Phase 1 (1,975-foot-long by 1,150 area [52.1 acres]). Depending on the treatment process, facilities would include 5 to 6 buildings, 2 to 6 lined and unlined ponds, septic system, and 3 to 6 tanks/vaults. The plant would be constructed in two phases; Phase 1 would operate at approximately 22 MGD capacity and Phase 2 would operate at full capacity of 37.6 MGD.

4. Site Conditions

Site conditions are summarized from the project's biological surveys and Biological Evaluation, and pre-construction vegetation surveys by Reclamation. The southern portion of the project is located within the Navajo Nation and is adjacent to widely scattered residential areas that include homes, residential yards, paved roads, two-track roads, power lines, and commercial facilities. Terrain drops into the San Juan River valley then steadily increase northward towards the San Juan Generating Station. Terrain includes gently undulating topography interspersed with steep badland and rock features and bluffs with elevations ranging from approximately 5,500 feet above mean sea level (AMSL) at the southern end of the project down to approximately 5,100 feet AMSL at the San Juan River and back to 5,300 feet AMSL near the San Juan Generating Station. Numerous surface geology formations are mapped in the project area and include badland formations, river wash, loams.

Pre-construction activities have included project surveying and staking as well as geotechnical testing by Reclamation. Construction of the pipeline is planned for 2022-2027 and will include clearing and grubbing of vegetation; topsoil removal and storage; pipeline construction and installing; grading, compaction, and restoration of the surface to original contours; topsoil replacement, and erosion control and stormwater management, and reseeding and reclamation.

4.1 Vegetation Communities

Reach 1, the northern half of Reach 2, central portion of Reach 3 near the Hogback, and the southern half of Reach 4B are characterized as a desert scrub grassland. Sparsely vegetated barren lands occur on Reaches 3, 4A, and 4B generally surrounding the Hogback. Areas of Reach 3 north of Route N36 and the southern portion of Reach 2 are vegetated by grasslands. Some agricultural and fallowed areas are in the San Juan River valley and riparian corridors exist along the Chaco and San Juan Rivers, Shumway Arroyo, along ditches, and under the San Juan Generating Station Dam.

4.1.1 Desert Scrub Grasslands

Vegetation percent cover in desert scrub grasslands of the project area averaged 33% (11% invasive species). Dominant vegetation included fourwing saltbush (*Atriplex canescens*), sand dropseed (*Sporobolus cryptandrus*), broom snakeweed (*Gutierrezia sarothrae*), Indian ricegrass (*Oryzopsis hymenoides*), Russian thistle (*Salsola* sp.), and halogeton (*Halogeton glomeratus*); while subdominant vegetation included greasewood (*Sarcobatus vermiculatus*), alkali sacaton (*Sporobolus airoides*), mat saltbush (*Atriplex corrugata*), winterfat (*Krascheninnikovia lanata),* scarlet globemallow (*Sphaeralcea coccinea*), beeplant (*Cleome* spp.), rubber rabbitbrush (*Ericameria nauseosa*), and James' galleta (*Pleuraphis jamesii*) among others.

4.1.2 Grasslands

Vegetation percent cover in grasslands of the project area averaged 42% (8% invasive species). Dominant vegetation includes James' galleta, Indian ricegrass, and sand dropseed; while subdominant vegetation included broom snakeweed, Russian thistle, halogeton, and rubber rabbitbrush among others.

4.1.3 Desert Flats

Vegetation percent cover in the barren desert flats of the project area averaged 16% (3% invasive species). Dominant vegetation includes alkali sacaton, halogeton, sixweeks grama, annual wheatgrass, and Russian thistle; while subdominant vegetation includes fourwing saltbush, winterfat, and unidentified forbs among others.

4.1.4 Riparian

The only riparian area that is planned to be disturbed is located on Reach 1 south of the San Juan Generating Station Dam. Vegetation is dominated by tamarisk and grasses with areas of rushes and sedges in zones of shallow groundwater or surface water.

4.2 Noxious Weeds

Russian thistle and halogeton are pervasive throughout the project area. Cocklebur (*Xanthium* sp.), cheatgrass (*Bromus tectorum*), and saltcedar (*Tamarix* sp.) are also found within and adjacent to the project area, with the latter primarily near water sources and washes. Halogeton is listed as a Class B species, and cheatgrass and saltcedar are listed at Class C species in New Mexico. These species are also listed noxious weeds on the Navajo Nation.

4.3 Pre-Disturbance Photographs

Pre-disturbance photographs of the project area are provided below from the project's pre-construction vegetation surveys by Reclamation.

Photo 1. Southern boundary of BLM of Reach 2 facing south; desert scrub grassland. (Eric Creeden/Reclamation)

Photo 2. Reach 3 grassland. (Eric Creeden/Reclamation)

Photo 3. Barren desert flat area in Reach 3 facing southwest towards the Hogback. (Eric Creeden/Reclamation)

Photo 4. Barren desert flat area near the San Juan Lateral Water Treatment Plant facing south. (Eric Creeden/Reclamation)

Photo 5. Desert flat area of Reach 4A. (Eric Creeden/Reclamation)

Photo 6. Desert scrub grassland of Reach 4B with Russian thistle in foreground. (Eric Creeden/Reclamation)

5. Revegetation Workflow

The details and methods for reclamation and revegetation as described further in this chapter are generally derived from the BLM Farmington Field Office's (FFO) 2013 Bare Soil Reclamation Procedures, regional reclamation and revegetation guides for arid zones, and consultation and coordination with the Navajo Nation and Bureau of Indian Affairs (BIA) Navajo Region.

5.1 Site Evaluation (Contractor)

The revegetation contractor shall evaluate the site conditions in the field and determine the applicability of actions described in this site-specific revegetation plan. The contractor shall evaluate these methods and submit any changes or recommendations to Reclamation that are thought to increase the successful implementation for the project prior to conducting work.

5.2 Soil Testing and Amendment

Soil conditions in the project area may preclude the successful attainment of vegetation standards for the vegetation communities in the project area. Reclamation conducted soil testing within the Block 4C-8 and Block 9-11 project areas in both native and NGWSP disturbed areas. Disturbed areas were found to have lower percentages of organic matter but otherwise were similar to native soils. Additional soil testing may be done in the project area of this site-specific revegetation plan; however, soil conditions are believed to be like those previously tested and no additional testing is planned at this time. Any future testing and analysis, if needed, shall document the physical and chemical properties of the soil as well as details on the macronutrients and micronutrients in the soil.

Based on analysis of the soil testing results (if conducted), organic and inorganic soil amendments may be requested to be added to the topsoil to improve its physical and chemical characteristics. The revegetation contractor shall consider the use of organic and permaculture soil management practices which involve minimizing or eliminating the use of synthetic fertilizers and pesticides, and nurture rich, long-term balanced soil fertility and nutrient cycling. Example organic soil amendments include humate, manure, and compost. Fertilizers, especially those containing Nitrogen, are not recommended based on the potential for promoting annual noxious weeds over native reseeded species. Degraded soil conditions may not preclude attempts to revegetate the site, but soil condition documentation may be used as a basis for future exception consideration for revegetation.

In areas where soil amendments are used, soil testing shall be repeated three years following project revegetation efforts to determine the success or lack of success of the soil amendments in improving soil health in the project areas.

5.3 Site Preparation

Site preparation will include ripping compacted soils to a sufficient depth (minimum 18 inches) with a maximum furrow spacing of 2 feet. If large clumps of soil clods are present, the site will be disked to break up the soil. Disking will be performed on the contour running perpendicular to slopes to minimize erosion.

Topsoil will be respread evenly across the disturbed area by the construction contractor to the approximate depth of topsoil that was initially cleared with a minimum depth of 6 inches. Replaced

topsoil will be free of trash, weeds, tree root balls and trunks. Final seedbed preparation shall include raking or harrowing the topsoil to promote a firm seedbed.

5.4 Erosion Control and Stormwater Management

Erosion control and stormwater management measures (primarily erosion control matting, wattles, and riprap) will be placed by the construction contractor along restored water features in the project area following guidance from the project's design specifications.

Erosion control matting shall be non-palatable for livestock (e.g. coconut based) and shall be installed in accordance with the manufacturer's recommended installation procedures. Erosion control measures shall be firmly secured to the ground. Newly installed erosion control features shall be long-lasting and robust to impacts from wind and water erosion.

5.5 Reseeding

Reseeding would be performed as soon as possible following construction and testing and immediately after topsoil has been replaced and the site prepared. The general time frame for reseeding would be July 15 to November 15 and would coincide with conditions when ambient temperatures are above 38 F, when the ground is not snow covered or frozen, and when there is a greater potential for moisture. Reseeding in the spring may also show success depending on moisture levels prior to the arrival of the summer monsoon.

A disk-type seed drill would primarily be used for reseeding with drill rows spaced one foot or less apart. Seed drilling would be performed on the contour running perpendicular to slopes to minimize runoff, rilling, and erosion. In areas where the slope is too steep to drill seed; hand broadcasting, mechanical broadcasting, hydroseeding, or other seeding methods may be utilized. Broadcast reseeding rates would be double that of drill seeding rates. Smaller seeds would be planted at a depth 0.25 to 0.5 inches whereas larger seeds would be planted at a depth of 1 to 2 inches. Improper planting depth can be especially problematic for successful reseeding and planting too shallow is generally better than planting too deep. Broadcast seeds would be covered in the appropriate depth of topsoil immediately after broadcasting using a hand rake or float.

Target revegetation percent cover goals are listed in Table 3, below, per guidance in the overall NGWSP Revegetation Plan. The general revegetation goal for project reaches is 70% of pre-disturbance levels. If pre-disturbance vegetation cover was below 25%, however, the goal of revegetation is to meet pre-disturbance levels.

Table 3. Target Revegetation Percent Cover Goals

Project Area	Native Vegetation % Cover	Invasive Vegetation % Cover	Total Vegetation % Cover	Target Revegetation % Cover
Desert Scrub Grasslands	22	11	33	23
Grasslands	34	8	42	29
Desert Flats	13	3	16	16

5.5.1 Seed Mixes

Disturbed areas will be reseeded with weed-free seed mixes that are described below. Deviations from the below seed mixes (due to outside forces such as seed availability) will be consulted upon with Reclamation. The seed mix in Table 4 will be used for the general project area. This seed mix has been derived based on vegetation surveys of the project area, information and seed pick lists from the BLM FFO's 2013 Bare Soil Reclamation Procedures (Appendix A & B), and Navajo Nation/BIA Navajo Region's 2018 NGWSP Recommended Seed Species for Bare Soils/Invasive Weed Infested Sites (Appendix C). The seed mix in Table 5 will be used in potential and occupied Mesa Verde cactus habitat. Revegetating private lands would include any additional landowner specific requests.

Prior to seeding, the revegetation contractor shall provide to Reclamation certification of the origin of seed, seed percent purity and germination, as well as information on prohibited and restricted weed seed content. Prohibited weed seeds in New Mexico are not allowed and the seed mix shall be 100% certified weed free. Seed purity shall meet a minimum of 85% and germination shall also meet a minimum of 85% with germination test of less than one year old at the time of seeding. Seed containers shall be sealed and labeled with seed origin and other seed specifications. Intrastate shipping of seeds shall be in accordance with New Mexico state seed laws and regulations; Interstate shipping of seeds shall be in accordance with U.S. Department of Agriculture rules and regulations under the Federal Seed Act.

Table 4. Upland Seed Mix for Project Area

Common Name	Scientific Name	Variety	Season	Form	Pure Live Seed (PLS) lbs/acre*
Sterile triticale	*Triticum aestivum X Secale cereale 'Quickguard'*	VNS	-		2.0
Fourwing saltbush	*Atriplex confertifolia*	VNS	Cool	Shrub	3.0
Shadscale	*Krascheninnikovia lanata*	VNS	Cool	Subshrub	2.0
Indian ricegrass	*Achnatherum hymenoides*	Paloma or Rimrock	Cool	Bunch	3.0
Western wheatgrass	*Pascopyrum smithii*	Arriba	Cool	Sod	2.0
Galleta	*Pleuraphis jamesii*	Viva florets	Warm	Bunch/Sod	2.0
Purple threeawn	*Aristida purpurea*	VNS	Warm	Bunch	2.0
Sand dropseed	*Sporobolus cryptandrus*	VNS	Warm	Bunch	0.25
Alkali sacaton	*Sporobolus airoides*	VNS	Warm	Bunch	0.25
Scarlet globemallow	*Sphaeralcea coccinea*	VNS	Warm	Forb	0.25

Common Name	Scientific Name	Variety	Season	Form	Pure Live Seed (PLS) lbs/acre*
Narrowleaf penstemon	*Penstemon angustifolius*	VNS	Cool	Forb	0.25
Rocky mountain beeplant	*Cleome serrulate*	VNS	Warm	Forb	0.25
Hairy false goldenaster	*Heterotheca villosa*	VNS	Warm	Forb	0.25
***Based on 60 pure live seeds (PLS) per square foot, drill seeded. Double this rate (120 PLS per square foot) if broadcast or hydroseeded.**					

Table 5. Seed Mix for Potential and Occupied Mesa Verde Cactus Habitat in Project Area

Common Name	Scientific Name	Variety	Season	Form	Pure Live Seed (PLS) lbs/acre*
Mat saltbush	*Atriplex corrugata*	VNS	-	Shrub	2.0
Winterfat	*Krascheninnikovia lanata*	VNS	Cool	Subshrub	2.0
Indian ricegrass	*Achnatherum hymenoides*	Paloma or Rimrock	Cool	Bunch	3.0
Galleta	*Pleuraphis jamesii*	Viva florets	Warm	Bunch/Sod	2.0
Purple threeawn	*Aristida purpurea*	VNS	Warm	Bunch	2.0
Sand dropseed	*Sporobolus cryptandrus*	VNS	Warm	Bunch	0.25
Scarlet globemallow	*Sphaeralcea coccinea*	VNS	Warm	Forb	0.25
Narrowleaf penstemon	*Penstemon angustifolius*	VNS	Cool	Forb	0.25
Rocky mountain beeplant	*Cleome serrulate*	VNS	Warm	Forb	0.25
Sand verbena	*Abronia villosa*	VNS	Warm	Forb	0.5
***Based on 60 pure live seeds (PLS) per square foot, drill seeded. Double this rate (120 PLS per square foot) if broadcast or hydroseeded.**					

5.5.2 Mulching

Mulching generally protects against erosion and can increase the chance of successful revegetation. Mulch shall be certified weed-free straw or native grass hay and shall be mechanically crimped into the soil within 24 hours of seeding at a rate of approximately 2 tons/acre. If hydroseeding is used, a mulch component shall be incorporated into the slurry mix.

5.6 Fencing

The NGWSP Revegetation Plan interprets the use of fencing as something that may be necessary to achieve ground cover criteria if acceptable ground cover conditions are not achieved within three years. No construction of fencing for enhanced revegetation success is anticipated for the project at this time. Other fences may exist within the project ROW, particularly near Navajo residences and land boundaries. No fences shall be cut during the revegetation process without the consent of adjacent landowners and by Reclamation.

5.7 Noxious and Invasive Weed Monitoring and Management

Halogeton and Russian thistle are both found in the project area and their presence is anticipated to increase due to the project's ground disturbance in the project area. Any noxious and invasive weeds found in the wetland areas of below the San Juan Generating Station Dam will be removed prior to construction. If herbicide use is anticipated to help with the successful establishment of revegetation, the revegetation contractor or Reclamation shall create an herbicide use plan with applicator certifications. Applicators shall be certified by the appropriate State, Tribal, or local agencies and application shall comply with label directions and applicable laws and regulations.

6. Monitoring and Reporting

Site monitoring and reporting of the disturbed project area will be completed by Reclamation and project contractors after construction and revegetation is complete and will continue until the revegetation percent goals and standards are attained and approved by Reclamation and the appropriate land manager. Monitoring will not be allowed when the ground surface is covered with snow or impacted by heavy precipitation. A monitoring plan will be developed to measure the success of reclamation efforts. Monitoring results will be reported and analyzed annually to see if changes are needed to meet the reclamation goals of the project.

Mitigation, monitoring, and reporting for the San Juan Generating Station Dam area will follow the wash specific plans developed in coordination with the USACE. Monitoring will include wash cross sections, vegetation transects, and photo points, and results will be analyzed to see if changes are needed to meet the reclamation goals of the project.

6.1 Noxious and Invasive Weeds

Reclamation and/or a contractor shall conduct annual noxious weed surveys in the summer. Surveys will be completed for three years following project revegetation efforts. Noxious weed results shall be reported to Reclamation with recommendations for treatment included in the report.

6.2 Revegetation

Reclamation and/or a project contractor will monitor the progress of revegetation in the project areas through both quantitative (vegetation transects) and qualitative (photo points) means.

6.2.1 Vegetation Transects

The line-point intercept method will be used to estimate vegetative percent cover for revegetated areas. Transect locations will be determined randomly within the project area and will be recorded using a GPS unit and associated geospatial information system (GIS). If needed, transects may be placed near project access points to facilitate project monitoring and reduce driving in the project area. Transects will be 100 meters in length with a recording taken every meter. All rooted vegetation (alive, dormant, dead) will be recorded by species, with areas of bare ground marked and unrooted loose vegetation or woody debris marked as litter. Species will be marked as either desirable or undesirable. Generally, three transects will be located per mile of project pipeline unless determined otherwise by project participants. The project area will be stratified by vegetation community and percent cover estimates averaged across the project area by vegetation community. Transects shall be directed along a diagonal across the drill seeding rows to not follow a seeding row. Additional details may be found within the overall NGWSP revegetation plan as well as the BLM FFO's 2013 Bare Soil Reclamation Procedures.

6.2.2 Photo Points

Photos points shall be established at all vegetation transects as well as any pertinent landscape monitoring locations. For vegetation transects, one photo shall be taken of the length of the transect and an additional photo shall be taken downwards of an approximate 1 square meter area at the start of the transect.

7. Adaptive Management

When monitoring reports indicate revegetation has not been successful, or Reclamation and/or the land manager identify negative impacts within the revegetation area, Reclamation will consult with the project participants to analyze issues that may have contributed to the failure, or lack of meaningful progress. All parties affected by the federal undertaking may be invited to participate in the discussion (e.g., grazing/farm/residential permit holder, grantee, land manager, surface staff, range staff, realty staff, recreation staff, or other authorized users that may be operating in the vicinity). The participants will discuss the potential causes that may have contributed to the nonattainment of the standards. The discussions may result in the development of a remedy plan (adaptive management methods) to address the lack of revegetation success, or to repair and reseed damage to reclaimed areas. In cases where Reclamation can demonstrate that the site does not have the biological potential to attain the standards, the discussions may result in the initiation of the NGWSP exception process described in the overall Revegetation Plan.

8. Appendices

8.1 Appendix A. BLM FFO 2013 Bare Soil Reclamation Procedures: Recommendations for Effective Reclamation

Recommendations: Provided below are some procedures and methods that may to help achieve more effective reclamation success.

Soil Testing: Development of a soil testing plan for evaluation of the results of topsoil handling and reclamation procedures related to revegetation may prove beneficial. Suggested soil testing may include some or all of the following: pH, electrical conductivity (EC), texture, topsoil depth and overall soil depth, carbonates (reactivity), organic matter (OM), Sodium Absorption Ratio (SAR).

Topsoil Stripping, Storage, and Replacement: At a minimum, the upper six (6) inches of topsoil should be stripped, following the removal of vegetation during construction of well pads, pipelines, roads, or other surface facilities. The stripped topsoil should be stored separately from subsoil or other excavated material and replaced prior to final seedbed preparation. Topsoil should not be used for blow pits or flaring areas.

Seedbed Preparation: For cut-and-fill slopes, initial seedbed preparation should consist of backfilling and recontouring to achieve the configuration specified in the reclamation plan. Seedbed preparation for compacted areas should be ripped to a minimum depth of eighteen (18) inches, with a maximum furrow spacing of two (2) feet. Where practicable, ripping should be conducted in two passes at perpendicular directions. Avoid leaving large clumps or clods. If this exists, disking should be conducted. Disking and seed drills should run perpendicular to slopes to provide terracing and prevent rapid runoff and erosion.

Seedbed preparation is one of the most important steps for reclamation success. Following final contouring, the backfilled or ripped surfaces should be covered evenly with topsoil. Final seedbed preparation should consist of raking or harrowing the spread topsoil prior to seeding to promote a firm seedbed. **A loose seedbed makes it impossible to control the depth of seeding because the tires and the planter sink into the soil.** Seedbed preparation may not be necessary for topsoil storage piles or other areas of temporary seeding.

Planting Depth: **Improper planting depth, particularly the planting of some species too deeply, in "fluffy" soils, is one of the major impediments to reseeding success.** The Truax seed drill or modified rangeland drills that allows for seeding species from different seed boxes at different planting depths has been used by other BLM offices to address this issue. Efforts should be taken to ensure that perennial grasses and shrubs are planted at the appropriate depth. Intermediate size seeds such as wheatgrasses and shrubs should be planted at a depth of 0.5 inches, larger seeds such as Indian ricegrass at 1 to 2 inches, and small seeds such as alkali sacaton, and sand dropseed should be planted at a depth of 0.25 inches. In situations where differing planting depths are not practicable with the equipment being used, the entire mix should be planted no deeper than 0.25 inch. Planting too shallow is generally better than planting too deep. **A review of current research methods is recommended (e.g., USDA**

PLANTS, USDA Plant Materials Centers, Native Seed Companies).

Soil Amendments: Amending a soil is not the same thing as mulching, although many types of mulch also are used as amendments. A "soil amendment" is any material added to a soil to improve its physical properties, such as water retention, permeability, water infiltration, drainage, aeration, nutrition and structure. Organic amendments include sphagnum peat, humate, wood chips, grass clippings, straw, compost, manure, biosolids, sawdust and wood ash. Inorganic amendments include vermiculite, perlite, lime, gypsum, tire chunks, pea gravel and sand.

Mulching: Mulch may increase the success of seed germination and provide protection against erosion. Mulch should be applied within 24 hours following completion of seeding. In areas of interim reclamation that used drill-seeding or broadcast-seeding/raking, mulch shall consist of crimping certified weed-free straw or certified weed-free native grass hay into the soil. Hydromulching may be used in areas of interim reclamation where crimping is impracticable, in areas of interim reclamation that were hydroseeded, and in areas of temporary seeding regardless of seeding method. Mulch applications in extremely clayey soils should be evaluated carefully to avoid developing an adobe mixture. In these cases, a soil amendment may prove more beneficial.

Timing of Seeding: Precipitation is the principal input controlling biological processes in arid and semiarid regions. The pattern of soil moisture will have a great impact on the fate of seeding. Many grasses species will germinate following significant moisture events that allow for deeper infiltration of soil moisture (4-12 inches deep). This moisture generally persists for several weeks and is available for seedling root growth and establishment.

Grass species belong to one of two basic physiological types; cool season or warm season. Cool season grasses have optimum growth temperatures of 70-75°F with growth halting at around 40°F. Warm season optimum temperatures occur at 85-95°F and growth ceasing at about 55°F. The best time for seeding grass is at the beginning of the growing season. For cool season grasses, there are two growing cycles: FALL and SPRING. The best time to plant cool season grasses is in late summer or early fall. For warm season grasses, there is 1 growing season: SUMMER. The best time plant warm season grass species is early spring or summer, with the onset of the monsoons, typically beginning in early to mid-July.

The paragraph above provides the optimal timings of seeding for cool and warm season species which make up the seed mixes for of the eight desired plant communities for reclaiming disturbed areas. Experience in Farmington Field Office has shown with adequate winter moisture seeds planted in the late fall or early winter (before the ground is frozen), that cool season species will germinate the following spring, setting the stage for germination of warm season species in the mix later in the season.

Additional Seeding Rates or Species: While minimum seed requirements have been provided by the BLM, it does not exclude proposals for increased seeding rates or additional species/varieties of plants to BLM for approval to achieve reclamation standards. Industry attaining an understanding of soil types, precipitation patterns, the climate, and vegetation/environment relationships could be very valuable.

Sterile Cover Crop Option: Sterile cover crops can be useful in temporary site stabilization in the case where bare soil is exposed. It also can be used with the perennial mix in reclamation for a non-persistent "nurse" crop. A nurse crop is an annual crop used to assist in establishment of a perennial crop. Nurse crops reduce the incidence of weeds, prevent erosion, and shelter tender seedlings from sun and wind.

Other advantages are:

- Sterile annual plant; rapid germination (sprout rapidly, establish quickly)
- Plant will not persist past one growing season
- Cold tolerant, able to grow under cool conditions
- Larger root mass and more efficient use of soil nutrients than wheat; holds soil and builds soil organic matter
- Superior tolerance to disease, salt, and drought compared to wheat
- Able to adapt to a wide range of soil and moisture conditions
- Adapts either fall or spring plantings; has fair to excellent winter survival

Common Name	Scientific Names	Variety	Season	Form	PLS lbs/acre*
Sterile cover crop	*Triticum aestivum X Secale cereale*	Quickguard or similar sterile hybrid var.	Cool	Grass	7-10
***Based on 60 pure live seeds (PLS) per square foot, drill seeded. Double this rate (120 PLS per square foot) if broadcast or hydroseeded. Can be mixed with the perennial mix and seeded at the same time.**					

BLM Consultation: BLM is available provide consultations concerning fencing options to help minimize industry costs, should fencing be necessary to achieve reclamation success.

8.2 Appendix B. BLM FFO 2013 Bare Soil Reclamation Procedures: Applicable Menu Based Seed Mixes

Table 5. Saltbush/Shadscale/Winterfat Community menu based reclamation seed mix

Common Name	Scientific Names	Variety	Season	Form	PLS lbs/acre*
Plant two of the following:					
Fourwing saltbush	*Atriplex canescens*	VNS	Cool	Shrub	4.0
Shadscale saltbush	*Atriplex confertifolia*	VNS	Cool	Subshrub	2.0
Winterfat	*Krascheninnikovia lanata*	VNS	Cool	Shrub	2.0
Plant one of the following:					
Indian ricegrass	*Achnatherum hymenoides*	Paloma or Rimrock	Cool	Bunch	4.0
Bottlebrush squirreltail	*Elymus elymoides*	Tusas germplasm or VNS	Cool	Bunch	3.0
Plant two of the following:					
Alkali sacaton	*Sporobolus airoides*	VNS	Warm	Bunch	0.25
Galleta	*Pleuraphis jamesii*	Viva florets	Warm	Bunch/Sod	3.0
Sand dropseed	*Sporobolus cryptandrus*	VNS	Warm	Bunch	0.5
Plant one of the following:					
Western wheatgrass	*Pascopyrum smithii*	Arriba	Cool	Sod	3.0
Siberian wheatgrass	*Agropyron fragile*	Vavilov	Cool	Bunch	3.0
Plant one of the following:					
Blue grama	*Bouteloua gracilis*	Alma or Hachita	Warm	Sod	2.5
Needleandthread	*Hesperostipa comata*	VNS	Cool	Bunch	2.5
Plant one of the following:					
Scarlet globemallow	*Sphaeralcea coccinea*	VNS	Warm	Forb	0.25
Narrowleaf penstemon	*Penstemon angustifolius*	VNS	Cool	Forb	0.25

***Based on 60 pure live seeds (PLS) per square foot, drill seeded. Double this rate (120 PLS per square foot) if broadcast or hydroseeded.**

Table 6. Reduced Palatability menu based reclamation seed mix

Common Name	Scientific Names	Variety	Season	Form	PLS lbs/acre*
Plant three of the following:					
Rubber rabbitbrush	*Ericameria nauseosa*	VNS	Cool	Shrub	2.0
Antelope bitterbrush	*Purshia tridentata*	VNS	Cool	Shrub	2.0
Wyoming sagebrush	*Artemsia tridentata* spp. *Wyomingensis*	VNS	Cool	Shrub	2.0
Fourwing saltbush	*Atriplex canescens*	VNS	Cool	Shrub	3.0
Shadscale saltbush	*Atriplex confertifolia*	VNS	Cool	Shrub	2.0
Fringed sage	*Artemisia frigida*	VNS	Cool	Subshrub	2.0
Plant one of the following:					
Purple threeawn	*Aristida purpurea*	VNS	Warm	Bunch	3.0
Bottlebrush squirreltail	*Elymus elymoides*	Tusas germplasm or VNS	Cool	Bunch	4.0
Plant two of the following:					
Indian ricegrass	*Achnatherum hymenoides*	Paloma or Rimrock	Cool	Bunch	3.5
Blue grama	*Bouteloua gracilis*	Alma or Hachita	Warm	Sod	2.0
Sand dropseed	*Sporobolus cryptandrus*	VNS	Warm	Bunch	0.5
Plant one of the following:					
Alkali sacaton	*Sporobolus airoides*	VNS	Warm	Bunch	0.25
Needleandthread	*Hesperostipa comata*	VNS	Cool	Bunch	2.5
Plant three of the following:					
Scarlet globemallow	*Sphaeralcea coccinea*	VNS	Warm	Forb	0.25
Smallflower or Nelson's globemallow	*Sphaeralcea parvifolia*	VNS	Warm	Forb	0.25
Annual sunflower	*Helianthus annuus*	VNS	Warm	Forb	0.25

Prairie aster	*Machaeranthera tanacetifolia*	VNS	Warm	Forb	0.25
Rocky Mountain beeplant	*Cleome serrulata*	VNS	Warm	Forb	0.25
Blanket flower	*Gaillardia pulchella* or *G. aristata*	VNS	Warm	Forb	0.25
Lewis flax	*Linum lewisii*	VNS	Warm	Forb	0.25
Hairy false goldenaster	*Heterotheca villosa*	VNS	Warm	Forb	0.25
Golden crownbeard	*Verbesina encelioides*	VNS	Warm	Forb	0.25
Tailcup lupine	*Lupinus caudatus*	VNS	Warm	Forb	0.25
***Based on 60 pure live seeds (PLS) per square foot, drill seeded. Double this rate (120 PLS per square foot) if broadcast or hydroseeded.**					

8.3 Appendix C. Navajo Nation/BIA NGWSP Recommended Seed Species for Bare Soils/Invasive Weed Infested Sites

Navajo Nation/BIA----NGWSP RECOMMENDED SEED SPECIES FOR BARE SOILS/INVASIVE WEED INFESTED SITES

September 28, 2018

Preferred Species:

Shrubs:

Four-wing saltbrush	*Atriplex canescens*
Shadscale saltbush	*Atriplex confertifolia*
Fringed sage	*Artemisia frigida*
Winterfat	*Krascheninnikovia lanata*

Grasses:

Bottlebrush squirreltail	*Elymus elymoides*
Indian ricegrass	*Achnatherum hymenoides*
Alkali sacaton	*Sporobolus airoides*
Galleta	*Pleuraphis jamesii*
Sand dropseed	*Sporobolus cryptandrus*

Forbs:

Scarlet globemallow	*Sphaeralcea coccinea*
Rocky Mt. Beeplant	*Cleome serrulata*
Annual sunflower	*Helianthus annuus*
Beardlip penstemon	*Penstemon barbatus*
Prairie aster	*Machaeranthera tanacetifolia*

Acceptable Alternatives:

Shrubs:

Mat saltbush	*Atriplex corrugata*
Bitterbrush	*Purshia tridentata*
Greasewood	*Sacrobatus vermiculatus*

Grasses:

Needle and thread	*Hesperostipa comata*
Blue grama	*Bouteloua gracilis*
Purple three awn	*Aristida purpurea*

Forbs:

Gooseberry-leaf globemallow	*Sphaeralcea grossulariifolia*
Hairy false goldenaster	*Heterotheca villosa*
Golden crownbeard	*Verbesina encelioides*

PART 2 PRODUCTS

Not Used

PART 3 EXECUTION

Not Used

END OF SECTION

This page intentionally left blank.

SECTION 51 00 50

ELECTRONIC MEDIA RELEASE

Bureau of Reclamation
Electronic Media Release

Bureau of Reclamation, Contract Number/Solicitation Number: _____

This release for electronic media is dated the ___ day of _____ (month), ____ (year), between _____ (RECIPIENT) and Bureau of Reclamation, for the exchange of electronic media (CD ROMs, DVD, Flash Drives, External Hard Disk Drives, etc.) containing information on the _____ project (hereinafter referred to as the PROJECT) for use by the RECIPIENT.

Therefore, RECIPIENT and Bureau of Reclamation (Reclamation), agree as follows:

1. All data and intellectual property contained on the electronic files remains the property of Bureau of Reclamation and may not be copied or distributed to any other party without the written permission of Bureau of Reclamation.
2. The electronic files provided to RECIPIENT by Bureau of Reclamation, for the PROJECT may be used or adapted by RECIPIENT for their own use. If RECIPIENT chooses to alter in any way, in whole or in part, the electronic files provided for the PROJECT or any future project(s), RECIPIENT agrees that the use of the altered files shall be without liability or legal exposure to Bureau of Reclamation.
3. Because information and data provided electronically may be altered, whether inadvertently or otherwise, Bureau of Reclamation, reserves the right to retain copies of the electronic file(s) and to remove from the electronic files provided to RECIPIENT all identification (such as logo, surveyor's seal, etc.) reflecting the involvement of Bureau of Reclamation, in their preparation.
4. The electronic files are provided solely as a convenience to RECIPIENT by Bureau of Reclamation and shall not be considered "Drawings of Record" or "Construction Documents." All documents considered "Drawings of Record" or "Construction Documents" will be hardcopy drawing sheets with signatures or scanned files of the hardcopy drawings with signatures.
5. RECIPIENT is advised to check all electronic media for viruses and malware before loading the files. RECIPIENT is solely responsible for intercepting and disabling viruses, if any, that may be transmitted with the electronic files and hereby agrees to indemnify and hold Bureau of Reclamation harmless from and against all claims of any type or nature asserted by RECIPIENT or any party as a result of viruses transmitted with the electronic files.
6. Files distributed electronically are subject to data erosion, erasure, and/or alteration, and computer systems and software become obsolete in time. By accepting these electronic files, RECIPIENT acknowledges these risks and agrees to waive all claims against Bureau of Reclamation, should data erosion, erasure, and/or alteration of these electronic files occur.

7. RECIPIENT agrees to defend, indemnify, and hold Bureau of Reclamation, harmless from all claims, injuries, damages, losses, expenses, and costs, including attorney's fees, arising out of breach of this agreement, or the modification or reuse of the electronic files.

ACCEPTED FOR RECIPIENT:	RELEASED BY BUREAU OF RECLAMATION:
By: _____	_____
Title: _____	_____
Date: _____	_____

END OF SECTION

SECTION 52 00 00
DRAWINGS

PART 1 GENERAL

1.01 DISCREPANCIES, ERRORS, OR OMISSIONS

A. Inform CO of discrepancies discovered on drawings in accordance with clause at FAR 52.236-21, Specifications and Drawings for Construction.

B. In accordance with clause at FAR 52.236-21, Specifications and Drawings for Construction, in case of discrepancies, written specifications take precedence over drawings unless otherwise specified.

1.02 PROJECT CONDITIONS

A. Where differences are determined by CO between details and dimensions shown on drawings and details and dimensions of existing features at jobsite, use details and dimensions of existing features at jobsite.

1.03 SPECIFICATION DRAWINGS

A. Disregard specifications and details shown on drawings which are not applicable to work under this contract.

B. Reference drawings referred to on specification drawings and not considered necessary for contract purposes are not included in specifications.

C. Parts of work for which dimensions are not shown have been drawn to scale as nearly to final dimensions as possible before purchase of machinery or equipment and development of final general and detailed designs.

1.04 TYPICAL DRAWINGS

A. Typical drawings show installations and details of construction like or approximate to that part of work under these specifications. Dimensions and details shown on typical drawings may vary from those shown on construction drawings to be furnished after award of contract.

B. Use typical drawings for bidding purposes only.

1.05 ADDITIONAL OR REVISED DRAWINGS

A. Except as provided in these specifications for drawings to be furnished by Contractor, specifications drawings will be supplemented by additional or revised general and detail drawings as necessary or desirable as work progresses.

B. Do not perform work without proper drawings and instructions.

C. Additional or revised general and detail drawings will show dimensions and details necessary for construction purposes more completely than are shown on these specification drawings for features of work, equipment, or metalwork not yet purchased.

D. Perform work in accordance with additional general and detail drawings or revisions at applicable prices offered in the Price Schedules for such work.

1.06 INFORMATION DRAWINGS

A. Drawings marked "For Information Only" in drawing list are included to show existing features about which knowledge is required to perform work under this contract. These drawings do not show work to be performed under this contract.

B. If differences are determined by CO between details and dimensions shown on these drawings and those of existing features at jobsite, use details and dimensions of existing features at jobsite.

1.07 STANDARD DRAWINGS

A. Standard drawings may show details which are not part of work under this contract. Disregard details shown on these drawings which are not applicable to work under this contract. YELLOW: NEED TO ADD DWGS

1.08 LIST OF DRAWINGS

A. Drawings listed in Table 52 00 00A – List of Drawings are made part of Section C – Description/Specifications.

1.09 DRAWING NUMBERS IN NUMERICAL ORDER

A. Specification drawings are listed in numerical order in Table 52 00 00B – Drawings in Numerical Order.

PART 2 PRODUCTS

Not Used

PART 3 EXECUTION

Not Used

Table 52 00 00A – List of Drawings

Sheet No.	Drawing No.	Title
General:		
1	1695-D-62333	General Map – NGWSP Project Map
2	1695-D-62334	Key Sheet - Key, Vicinity, and Location Map
3	1695-D-62335	Key Sheet - General Notes, Abbreviations, and Symbols
4	1695-529-60402	Navajo Nation Tribal Trust Land - Parcel No. RCH 21-Tribal Trust – 04 (P)
5	1695-529-60453	Navajo Nation Tribal Trust Land - Parcel No. RCH 21-Tribal Trust-01(P)(T)
Civil:		
6	1695-D-62338	Booster Plant – Existing Conditions and Demolition Plan
7	1695-D-62339	Booster Pumping Plant - Site Plan
8	1695-D-62340	Booster Pumping Plant - Grading Site Plan (Vertical)
9	1695-D-62341	Booster Pumping Plant - Road Regrading Site Plant
10	1695-D-62342	Regulating Tank #3 - Existing Conditions
11	1695-D-62343	Regulating Tank #3 - Site Plan (Horizontal)
12	1695-D-62344	Regulating Tank #3 - Grading Site Plan (Vertical)
13	1695-D-62345	Regulating Tank #3 - Rundown Channel – Plan - Profile
14	1695-D-62346	Regulating Tank #3 - Rundown Channel
15	1695-D-62347	Regulating Tank #3 – Stilling Basin
16	1695-D-62348	Trench - Sections and Details
Architectural:		
17	1695-D-62352	Architectural – Plan, Elevations and Sections
Structural:		
18	1695-D-62358	Civil - Booster Plant - Structural Excavation - Sections
19	1695-D-62359	Tank Structural Excavation and Valve Box Plans, Sections, and Detail
20	1695-D-62360	Structural Foundation – Concrete Outline and Reinforcement – Plan and Sections

Table 52 00 00A – List of Drawings

Sheet No.	Drawing No.	Title
21	1695-D-62361	Miscellaneous Metalwork – Guardrail Section and Details
22	1695-D-62362	Retaining Structure – Concrete Outline & Reinforcing Details
23	1695-D-62363	Pipe Support Retaining Structure – Concrete Outline & Reinforcing Details - Plan and Sections
Mechanical:		
24	1695-D-62366	Reach 21 Booster Plant - Plan
25	1695-D-62367	Reach 21 Booster Plant - Sections
26	1695-D-62368	Reach 21 Booster Plant - Detail and Sections
27	1695-D-62369	Reach 21 Booster Plant - Details
28	1695-D-62370	Regulating Tank #3 - Plan
29	1695-D-62371	Regulating Tank #3 – Section and Detail
30	1695-D-62372	Regulating Tank #3 - Tank Drain and Overflow Plan
31	1695-D-62373	Regulating Tank #3 - Tank Drain and Overflow Sections
32	1695-D-62374	Regulating Tank #3 - Steel Tank Plan and Sections
33	1695-D-62375	Regulating Tank #3 – Steel Tank Section and Details
34	1695-D-62376	Regulating Tank #3 – Steel Tank Section and Details
35	1695-D-62381	Piping and Instrumentation Diagram - Legend
36	1695-D-62382	Piping and Instrumentation Diagram - Symbols & Abbreviations
37	1695-D-62383	Piping and Instrumentation Diagram- Symbols & Abbreviations
38	1695-D-62384	Piping and Instrumentation Diagram – Plant Site
39	1695-D-62385	Piping and Instrumentation Diagram – Reach 21 Booster Plant
40	1695-D-62386	Piping and Instrumentation Diagram – Regulating Tank #3 - Site
Electrical:		
41	1695-D-62387	Electrical Installation –Network Diagram
42	1695-D-62388	Electrical Installation – Booster Plant - Single Line Diagram
43	1695-D-62389	Electrical Installation – Booster Plant – Elevation View

Table 52 00 00A – List of Drawings

Sheet No.	Drawing No.	Title
44	1695-D-62390	Electrical Installation – Booster Plant – Tank 3 Site and Ground Plan; Panel & Cable and Conduit Schedule
Cathodic Protection:		
45	1695-D-62391	Cathodic Protection - Test Stations, Anode Junction Box, Cable Trench Details
46	1695-D-62392	Cathodic Protection - Bond Details, Isolation Joint, Flange Kits
47	1695-D-62393	Cathodic Protection – GACP System – Tank Section and Profile
48	1695-D-62394	Cathodic Protection – Yard Pipe Cathodic Protection Modification
49	1695-D-62395	Cathodic Protection – Yard Pipe Cathodic Protection Modification Details
Information Drawings:		
50	080-I-3008	I & C – Typical Radio System Concepts
51	080-I-3010	I & C – Radio Equipment Installation Details
52	850-C-3001	Reach 21 Pipeline - ENWP Phase 3 Tie In
53	850-C-3002	Reach 21 Pipeline – Miscellaneous Construction Details
54	850-C-3008	Reach 21 Pipeline – Site Butterfly & Gate Valve Details
55	850-C-3310	Reach 21 Pipeline – 4-inch Flush Valve with Riser Detail
56	900-C-3000	Reach 21 Pipeline – Reach 21 Tank Site No. 3 Site Plan
57	900-C-3002	Reach 21 Pipeline – Reach 21 Tank Site No. 3 Stormwater BMP Plan
58	900-C-3003	Reach 21 Pipeline – Reach 21 Tank Site No. 3 Piping Plan
59	900-C-3004	Reach 21 Pipeline – Reach 21 Tank Site No. 3 Site Valve Numbers
60	900-C-3301	Reach 21 Pipeline – Tank Details (1 of 2)
61	900-C-3302	Reach 21 Pipeline – Tank Details (2 of 2)
62	900-C-3303	Reach 21 Pipeline – Typical Water Storage Tank Details (1 of 2)
63	900-C-3304	Reach 21 Pipeline - Typical Water Storage Tank Details (2 of 2)
64	900-D-2001	Tank 3 Support Facility – Process Plan

Table 52 00 00A – List of Drawings

Sheet No.	Drawing No.	Title
65	900-E-2001	Tank 3 Support Facility – Electrical Plan
66	900-I-0001	Tank 3 Support Facility – Finished Water P&ID
67	LCP90001-00	I&C – T3 Radio Panel LCP-900-01- Drawing Index
68	LCP90001-01	I&C – T3 Radio Panel LCP-900-01- Cabinet Layout
69	LCP90001-02	I&C – T3 Radio Panel LCP-900-01- Power Distribution
70	LCP90001-03	I&C – T3 Radio Panel LCP-900-01- Cabinet Layout Details
71	LCP90001-04	I&C – T3 Radio Panel LCP-900-01- DI Wiring Diagram
72	LCP90001-05	I&C – T3 Radio Panel LCP-900-01- AI Wiring Diagram
73	LCP90001-06	I&C – T3 Radio Panel LCP-900-01- Surge Suppressor Enclosure Detail
74	LCP90001-07	I&C – T3 Radio Panel LCP-900-01- Network Diagram
Standard Drawings:		
75	104-D-1150	Designations and Symbols – Single-Line and Schematic Diagrams
76	104-D-1165	Main Control Board CSA – Panel 7R – Wiring Diagram
77	104-D-60005	Electrical Government Format – Standards
78	104-D-757	Electrical Installations – Designations and Symbols
79	40-D-4334	Electrical Installation – Typical Grounding Details
80	40-D-4335	Electrical Installation – Typical Grounding Details
81	40-D-4401	Small and Medium Pumping Plants – Design Notes
82	40-D-5324	Electrical Standards – Controls/Instrument Switches, Escutcheons & Indicating Lamps
83	40-D-5328	Pipe Supports
84	40-D-5599	Small Equipment Foundations
85	40-D-5913	Valve Support
86	40-D-60001	Electrical Equipment Support Type 1
87	40-D-60003	General Notes for Concrete Outline and Reinforcement
88	40-D-60004	Minimum Requirements for Detailing Reinforcement

Table 52 00 00A – List of Drawings

Sheet No.	Drawing No.	Title
89	40-D-6006	Pump Mounting – Horizontal and Vertical Units
90	40-D-6032	Induction Motors
91	40-D-6119	Electrical Installation – Protective Devices Schematic Diagram & Designations
92	40-D-6234	Standard Nameplates
93	40-600-59	Chain – Link Security Fence – Standard Details
94	40-600-60	Chain – Link Security Fence – Standard Gate Details
95	40-D-7016	Chain Link Fence Requirements – Soil Installation – Plan, Elevations, and Details
96	40-D-7017	Chain Link Fence Requirements – Concrete Installation – Plan, Elevations, and Details
97	40-D-7094	Electrical Installation – Conduit Clamp & Conduit Supports Typical Details
98	40-D-7099	Electrical Installation – Bushing Stand for Spare Transformer Bushings Type ‘A’ and ‘B’
99	40-D-7102	Drawing Border, Sample Title Block, and Signature Lines

Table 52 00 00B – Drawings in Numerical Order

Drawing No.	Sheet No.
1695-D-	

Table 52 00 00B – Drawings in Numerical Order

Drawing No.	Sheet No.

Table 52 00 00B – Drawings in Numerical Order

Drawing No.	Sheet No.

Table 52 00 00B – Drawings in Numerical Order

Drawing No.	Sheet No.

Table 52 00 00B – Drawings in Numerical Order

Drawing No.	Sheet No.

END OF SECTION

This page intentionally left blank.