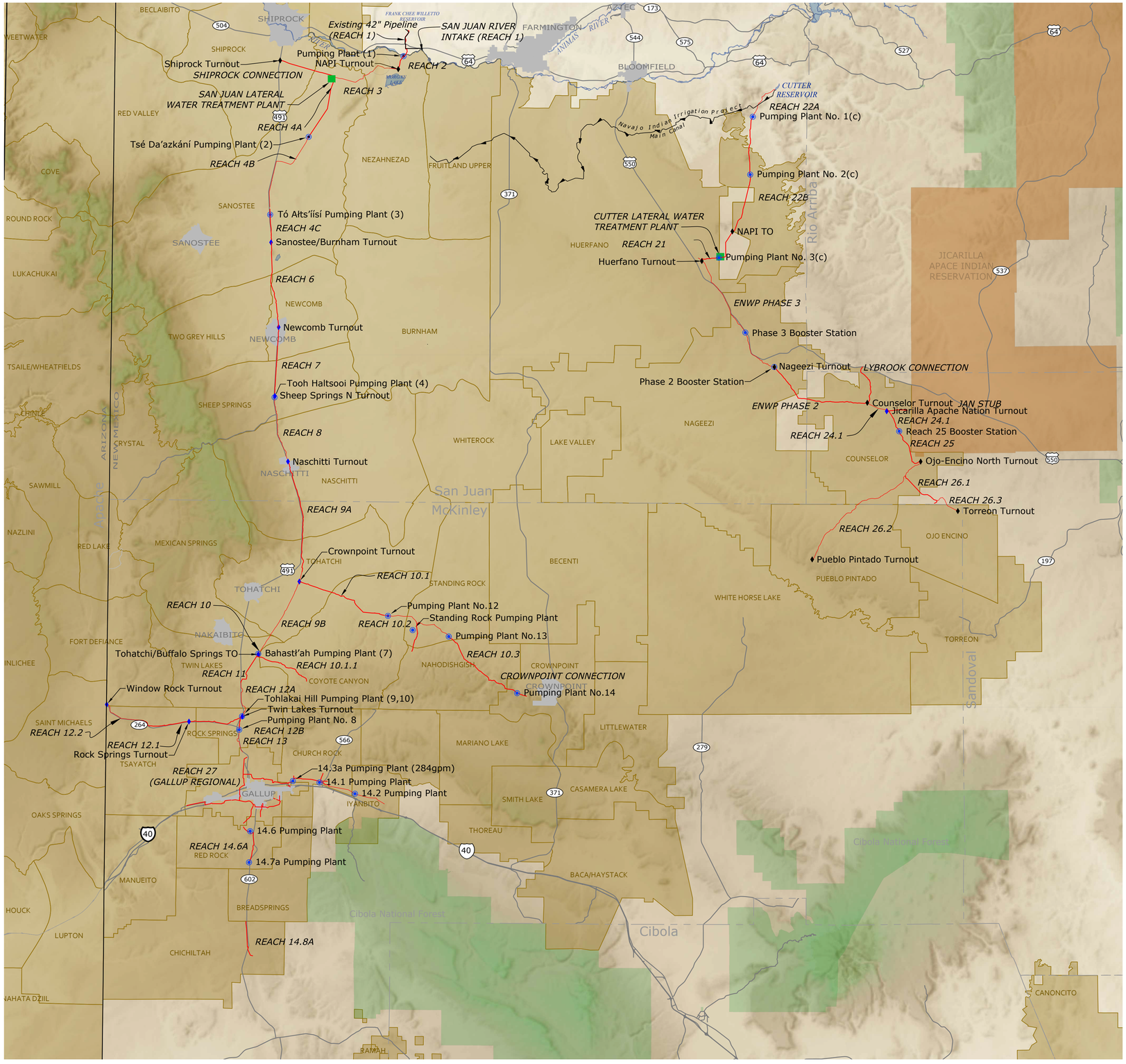

KEY MAP

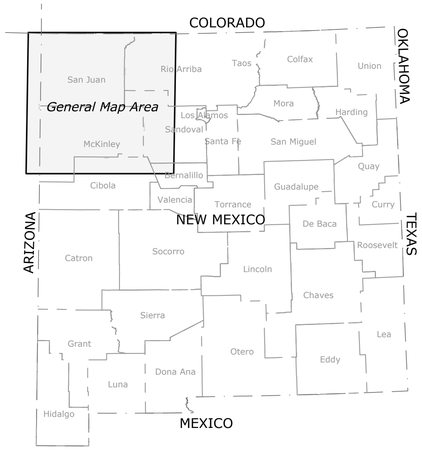

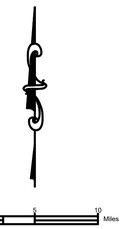

LEGEND

- *Pipeline (Varied by Reach)*
- *Water Treatment Plant*
- *Pumping Plant Location*
- *Turnout Location*
- *Jicarilla Indian Reservation*
- *Navajo Nation Indian Reservation (Chapters)*
- *Highway (as desiginated)*
- *County Line*

— BUREAU OF — RECLAMATION

ALWAYS THINK SAFETY

U.S. DEPARTMENT OF THE INTERIOR
BUREAU OF RECLAMATION
NAVAJO-GALLUP WATER SUPPLY PROJECT
NEW MEXICO

CUTTER LATERAL - REACH 21

BOOSTER PLANT

For Reference Only
DRAFT
Not For Distribution

JALISSA DEHAAN	DESIGNED
JALISSA DEHAAN	DRAWN
LOGON VOGT	CHECKED
	TECH. APPR.
	APPROVED PEER REVIEWER
DENVER, CO	

GENERAL MAP

NGWSP PROJECT MAP

1695-D-62333

SHEET 1

LAST SAVED DATE
2025-06-24
LAST SAVED BY
JSEHAAE

CAD SYSTEM
AutoCAD 24.2S (LMS TECH)
CAD FILENAME
1695-D-62333-RD-1.DWG

PROJECT DATUMS

1. Horizontal coordinates are based on the NAD83 datum, and are in New Mexico State Plane West Zone.
2. Horizontal Datum: NAVD88

UTILITY LOCATION

1. New Mexico 811, 1021 Eubank Blvd. N.E., Albuquerque, NM 87112, Dial 811 or 800-321-2537.
2. Navajo Tribal Utility Authority (NTUA), P.O. Box 170, Fort Defiance, AZ 86504, 928-729-5721, www.ntua.com
3. Arizona Public Service (APS), P.O. Box 53933, Phoenix, AZ 85072, 602-371-7880.

GEOLOGIC NOTE

For General Geologic Legend Explanation, and Notes, see specifications.

GENERAL NOTES

1. General Notes, Abbreviations, Symbols and Pipe Classification apply to all plan and profile drawings.
2. Minimum earth cover over the top of the pipe shall be 5.0'.
3. Unknown elevations and diameters of existing utilities shall be determined by the contractor and reported to the COR in time to allow adjustment of grades and design, if required, before contractor submits pipe, fittings, and miter bends for approval.
4. For limits on excavation near gas lines, see Specifications.
5. Maintained roads require gravel surfacing and restrained joints per specifications.
6. CAUTION: Call New Mexico One Call 811 before you dig.
7. Reinforce and weld steel pipe outlets per AWWA M11.

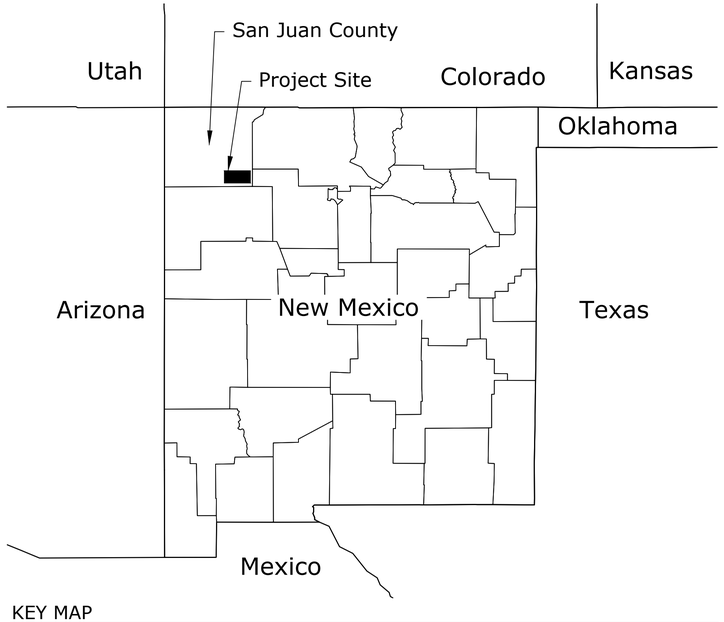

KEY MAP
NOT TO SCALE

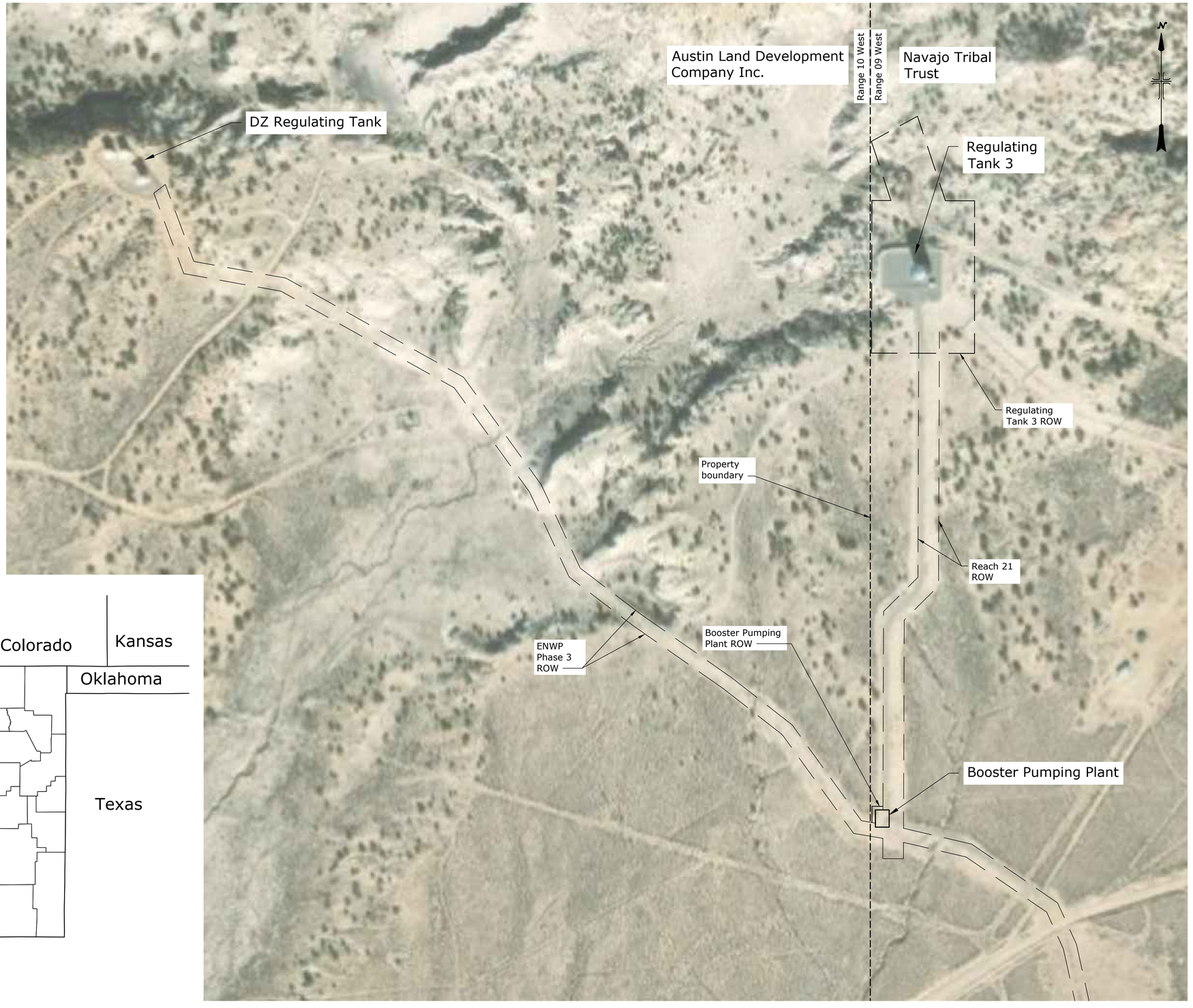

LOCATION MAP
0 150' 300'

BUREAU OF RECLAMATION

ALWAYS THINK SAFETY

U.S. DEPARTMENT OF THE INTERIOR
BUREAU OF RECLAMATION

NAVAJO-GALLUP WATER SUPPLY PROJECT

CUTTER LATERAL - REACH 21

BOOSTER PLANT

Draft
For Review Only
Not For Construction

Jalissa DeHaan	DESIGNED
Jalissa DeHaan	DRAWN
Sam Ameen	CHECKED
	TECH. APPR.
	APPROVED PEER REVIEWER
DENVER, CO	

KEY SHEET

KEY, VICINITY, AND LOCATION MAP

1695-D-62334

SHEET 1

LAST SAVED DATE
2025-05-15 14:45:40
LAST SAVED BY
SAMEEN

CAD SYSTEM
AutoCAD Civil 3D 2025 (LMS TECH)
CAD FILENAME
1695-D-62334-RD-1.DWG

ABBREVIATIONS

Apprx.	- Approximate
AWWA	- American Water Works Association
BVCE	- Begin Vertical Curve Elevation
BVCS	- Begin Vertical Curve Station
CL	- Centerline
CR	- County Road
CMP	- Corrugated Metal Pipe
D.I.	- Ductile Iron
Dia	- Diameter
DR	- Dimension Ratio
DZ	- Dzilth-Na-O-Dith-Hle
E	- East
El	- Elevation
ENWP	- Eastern Navajo Water Pipeline
ESMT	- Easement
EVCE	- End Vertical Curve Elevation
EVCS	- End Vertical Curve Station
FGC	- Finished grade of concrete/vault
HDPE	- High Density Polyethylene
Ht.	- Height
HGL	- Hydraulic Grade Line
Inc.	- Incorporated
IPS	- Iron Pipe Size
ISR	- Indian Service Route
K	- Rate of Vertical Curve Curvature
LVC	- Length of Vertical Curve
Max	- Maximum
ME	- Match Existing
Min	- Minimum
MJ	- Mechanical Joint
N	- North
NTUA	- Navajo Tribal Utility Authority
O.D.	- Outside Diameter
OGR	- Onsite Government Representative
OH	- Overhead
PI	- Point of Intersect
PVC	- Polyvinyl Chloride
PVI	- Point of Vertical Intersection
PNM	- Public Service Company of New Mexico
R	- Radius
R21	- Reach 21
Reg	- Regulating Tank
ROW	- Right-of-Way
RTE	- Route
S	- South
S.P.	- State Plane
Std.	- Standard
TOV	- Top of Vault
TP	- Test Pit
typ.	- Typical
W	- West
BVCS	- Beginning Vertical Curve Station
BVCE	- Beginning Vertical Curve Elevation
EVCS	- Ending Vertical Curve Station
EVCE	- Ending Vertical Curve Elevation
K	- Rate of vertical curvature
S.Q.	- Algebraic Difference (between the two grades)
PVI STA	- Point of Vertical Intersection Station
PVI ELEV	- Point of Vertical Intersection Elevation

SYMBOLS

- Building
- Building Foundation
- CL Pipe
- CL Road (existing)
- CL Road (proposed)
- CL Yard Pipe
- Chain Link Fence
- ROW
- Dirt Road
- Ditch
- Existing ROW
- Natural Gas Pipeline (G)
- Parking lot
- Powerline
- Property Boundary
- Retaining Wall
- Site Boundary
- Swale
- Tank Base
- Tank (existing)
- Tank (proposed)
- Waterline (W)
- Yard Pipe
- Grading Extents

HATCHES

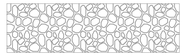

Gravel

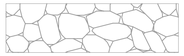

Rip-rap

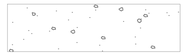

Concrete

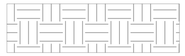

Existing subgrade

Compacted backfill

Select material

Loose Rip-rap

LAST SAVED DATE
2025-05-19
LAST SAVED BY
SAMEEN

CAD SYSTEM
AutoCAD Civil 3S (LMS TECH)
CAD FILENAME
1695-D-62335-RD-1.DWG

— BUREAU OF —
RECLAMATION

ALWAYS THINK SAFETY

U.S. DEPARTMENT OF THE INTERIOR
BUREAU OF RECLAMATION
NAVAJO-GALLUP WATER SUPPLY PROJECT
NEW MEXICO

CUTTER LATERAL - REACH 21
BOOSTER PLANT

Draft
Not For Distribution
For Reference Only

SAM AMEEN
DESIGNED
SAM AMEEN
DRAWN
JALISSA DEHAAN
CHECKED
TECH. APPR.
APPROVED
ADMIN APPROVAL
DENVER, CO 2025-05-19

KEY SHEET

GENERAL NOTES, ABBREVIATIONS, AND SYMBOLS

1695-D-62335

SHEET 1

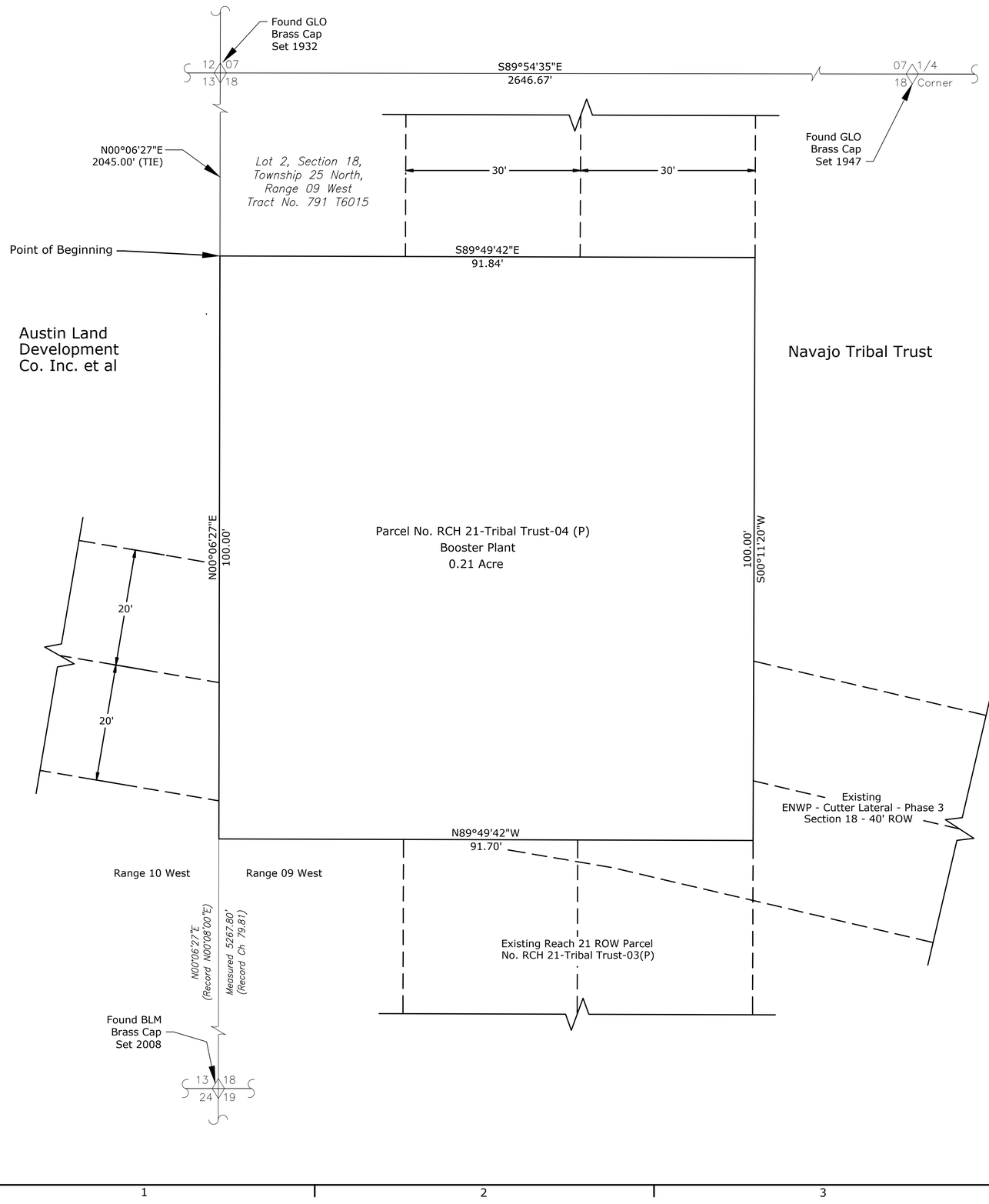

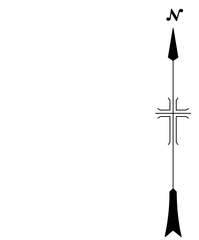

◊ *Indicates Found Monument*

○ *Indicates Monument Not Found*

10 0 10 20 30
SCALE OF FEET

Section 18, Township 25
North, Range 09 West,
N.M.P.M.
NAVAJO NATION
TRIBAL TRUST LAND
SAN JUAN COUNTY
NEW MEXICO

Navajo–Gallup Water Supply Project – Reach 21 – Booster Plant – Parcel No. RCH 21–Tribal Trust–04 (P) – Permanent Easement – Tribal Trust Land

A parcel of land lying in Navajo Nation Tribal Trust Land in the Southwest Quarter (Lot 2) of the Northwest Quarter, Section 18, Township 25 North, Range 09 West; N.M.P.M., San Juan County, New Mexico. More particularly described as follows:

Point of Beginning being a point on the West line of said Section 18, from which the Northwest Corner of said Section 18 bears North 00°06'27" East a distance of 2045.00 feet; thence, from the Point of Beginning South 89°49'42" East a distance of 91.84 feet; thence South 00°11'20" West a distance of 100.00 feet; thence North 89°49'42" West a distance of 91.70 feet to a point on said West line of Section 18; thence along said West line North 00°06'27" East a distance of 100.00 feet to the Point of Beginning.

Parcel No. RCH 21–Tribal Trust–04(P) contains 0.21 acres more or less.

STATE OF NEW MEXICO
COUNTY OF SAN JUAN

_____, being duly sworn, says that he is the Construction Engineer of the Four Corners Construction Office, U. S. Bureau of Reclamation: That the survey of Reach 21, Cutter Lateral, Navajo–Gallup Water Supply Project, over and across Indian Lands, in the county of San Juan, New Mexico, was made under his direction and authority of the Bureau of Reclamation, and that such survey is accurately represented on this map.

_____
Construction Engineer *Date*

STATE OF NEW MEXICO
ss:
COUNTY OF SAN JUAN

Before me, a notary public, in and for said County and State on this _____ day of _____, 20___ personally appeared

_____ known to me to be the person whose name is subscribed and the name of the maker thereof to the foregoing instrument as the Construction Engineer of the Four Corners Construction Office, U. S. Bureau of Reclamation, and acknowledged to me that he executed said instrument for the uses and purposes therein set forth.

My commission expires _____ *_____*
SEAL
Notary Public

— BUREAU OF —
RECLAMATION

NOTE:
Bearings shown on this drawing are developed from the New Mexico State Plane West Zone Grid (NAD83) and are based on surveys of existing monuments. Distances and Stations shown are ground (local). The Grid Factor from distances shown to New Mexico State Plane West Zone Grid (NAD83) is 0.999620438002.

No Monuments will be set.

ALWAYS THINK SAFETY

U.S. DEPARTMENT OF THE INTERIOR
BUREAU OF RECLAMATION
NAVAJO-GALLUP WATER SUPPLY PROJECT

CUTTER LATERAL - REACH 21

BOOSTER PLANT

Draft
For Review Only
Not For Distribution

REV NO	
1	529 Updated survey data for Section 18 T25N R09W. Also updated the Parcel No. RCH 21-Tribal Trust-04(P)

DESIGNED	Malcolm Begay
DRAWN	Malcolm Begay
CHECKED	Michael Braman
TECH. APPR.	Rover, Ryan S P.E.
APPROVED ADMIN APPROVAL	Gladden, Ryan L P.E.
FARMINGTON, NM	2024-03-08

NAVAJO NATION - TRUST LAND

PARCELS NOS. RCH 21 - TRIBAL TRUST - 04 (P)

1695-529-60402

SHEET 1

LAST SAVED DATE
2024-03-08
LAST SAVED BY
MBEGAY

CAD SYSTEM
AUTOCAD 25 (LMS TECH)
CAD FILENAME
1695-529-60402-RD-1.DWG

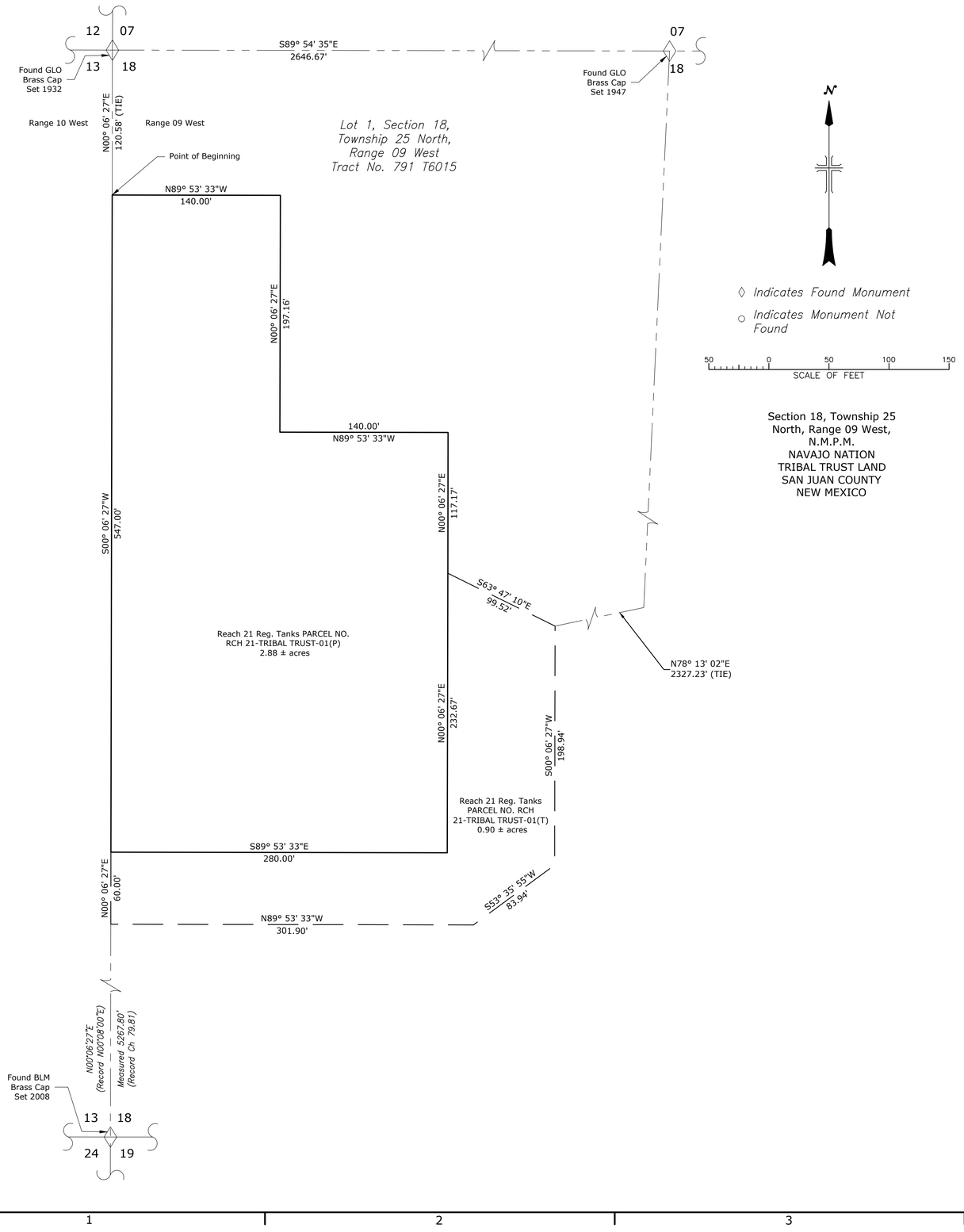

Navajo–Gallup Water Supply Project – Reach 21 Reg. Tanks Parcel No. RCH 21–TRIBAL TRUST–01(P)

A parcel of land lying in Navajo Nation Tribal Trust Land in the Northwest Quarter (Lot 1) of the Northwest Quarter, Section 18, Township 25 North, Range 09 West; N.M.P.M., San Juan County, New Mexico. More particularly described as follows:

Point of Beginning being a point on the West line of said Section 18, from which the Northwest Corner of Said Section 18 bears North 00°06'27" East a distance of 120.58 feet; thence from the Point of Beginning, South 00°06'27" West a distance of 547.00 feet; thence South 89°53'33" East a distance of 280.00 feet; thence North 00°06'27" East a distance of 232.67 feet; thence North 00°06'27" East a distance of 117.17 feet; thence North 89°53'33" West a distance of 140.00 feet; thence North 00°06'27" East a distance of 197.16 feet; thence North 89°53'33" West a distance of 140.00 feet to the Point of Beginning.

Parcel No. RCH 21–TRIBAL TRUST–01(P) contains 2.88 acres more or less.

Navajo–Gallup Water Supply Project – Reach 21 Reg. Tanks Parcel No. RCH 21–TRIBAL TRUST–01(T)

A parcel of land lying in Navajo Nation Tribal Trust Land in the Northwest Quarter (Lot 1) of the Northwest Quarter, Section 18, Township 25 North, Range 09 West; N.M.P.M., San Juan County, New Mexico. More particularly described as follows:

Point of Beginning being a point within said Section 18 from which the North Quarter Corner of Section 18 bears North 78°13'02" East a distance of 2327.23 feet; thence from the Point of Beginning, South 00°06'27" West a distance of 198.94 feet; thence South 53°35'55" West a distance of 83.94 feet; thence North 89°53'33" West a distance of 301.90 feet; thence North 00°06'27" East a distance of 60.00 feet; thence South 89°53'33" East a distance of 280.00 feet; thence North 00°06'27" East a distance of 232.67 feet; thence South 63°47'10" East a distance of 99.52 feet to the Point of Beginning.

Parcel No. RCH 21–TRIBAL TRUST–01(T) contains 0.90 acres more or less.

STATE OF NEW MEXICO
COUNTY OF SAN JUAN

_____, being duly sworn, says that he is the Construction Engineer of the Four Corners Construction Office, U. S. Bureau of Reclamation: That the survey of Reach 21, Cutter Lateral, Navajo–Gallup Water Supply Project, over and across Indian Lands, in the county of San Juan, New Mexico, was made under his direction and authority of the Bureau of Reclamation, and that such survey is accurately represented on this map.

_____
Construction Engineer *Date*

STATE OF NEW MEXICO
ss:
COUNTY OF SAN JUAN

Before me, a notary public, in and for said County and State on this _____ day of _____, 20___ personally appeared _____ known to me to be the person whose name is subscribed and the name of the maker thereof to the foregoing instrument as the Construction Engineer of the Four Corners Construction Office, U. S. Bureau of Reclamation, and acknowledged to me that he executed said instrument for the uses and purposes therein set forth.

My commission expires _____

_____
Notary Public

SEAL

BUREAU OF RECLAMATION

NOTE:
Bearings shown on this drawing are developed from the New Mexico State Plane West Zone Grid (NAD83) and are based on surveys of existing monuments. Distances and Stations shown are ground (local). The Grid Factor from distances shown to New Mexico State Plane West Zone Grid (NAD83) is 0.999620438002.

No Monuments will be set.

ALWAYS THINK SAFETY

U.S. DEPARTMENT OF THE INTERIOR
BUREAU OF RECLAMATION
NAVAJO-GALLUP WATER SUPPLY PROJECT

CUTTER LATERAL - REACH 21

RIGHT-OF-WAY

Draft
Not For Distribution
For Review Only

DESIGNED	Malcolm Begay
DRAWN	Malcolm Begay
CHECKED	Michael Braman
TECH. APPR.	
APPROVED ADMIN APPROVAL	
	FARMINGTON, NM

NAVAJO NATION -
TRIBAL TRUST LAND

PARCEL NO. RCH
21-TRIBAL
TRUST-01(P)(T)

1695-529-60453

SHEET 1

LAST SAVED DATE
2019-04-15
LAST SAVED BY
MBEGAY

CAD SYSTEM
AutoCAD LT 2015 (LMS TECH)
CAD FILENAME
1695-529-60453-RO-1.DWG

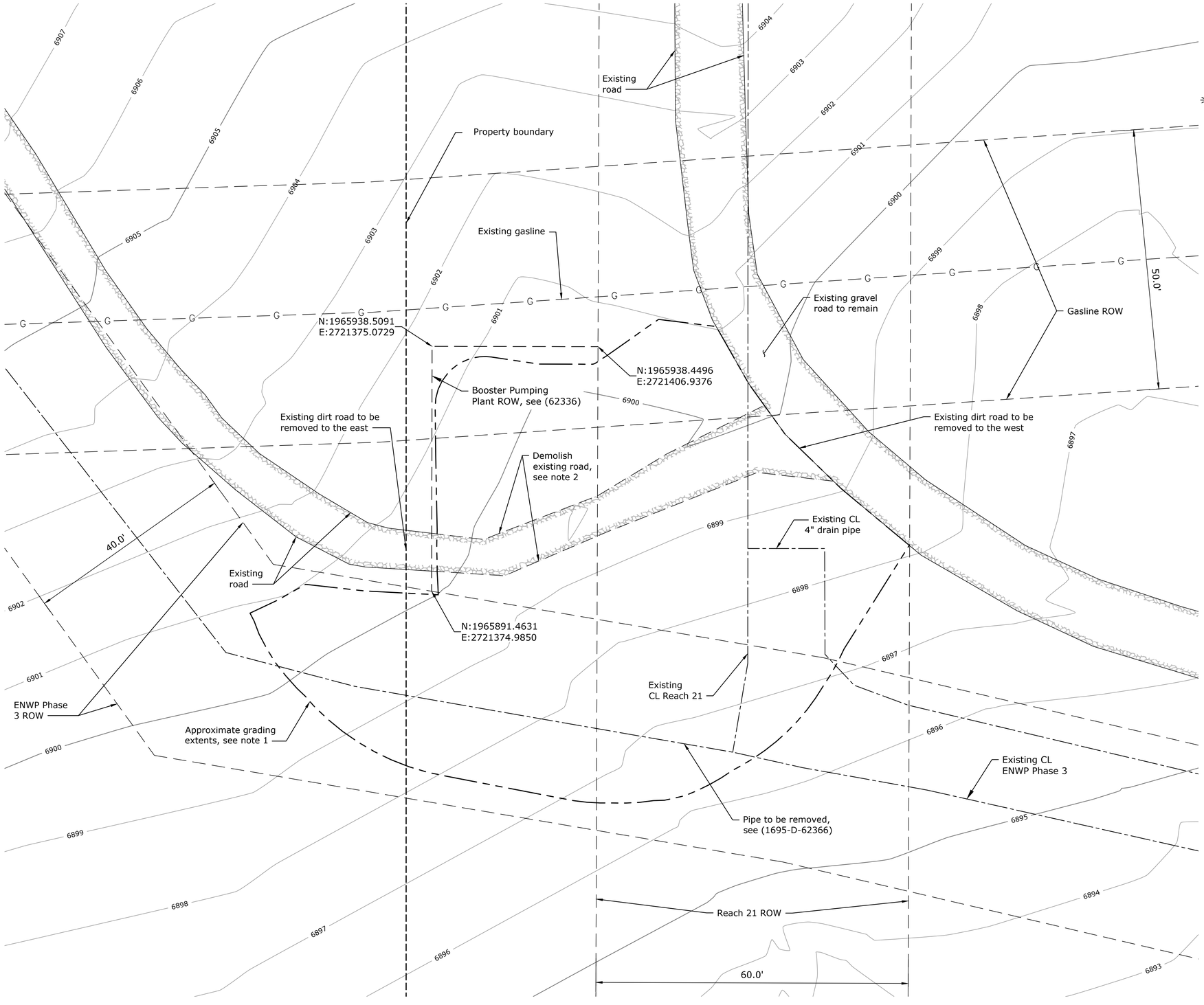

PLAN-EXISTING CONDITIONS & DEMOLITION PLAN

NOTES

1. Approximate grading extents, clear and screen area for vegetation, large rocks, etc. before backfilling and grading. see Specifications for additional information.
2. Demolish existing road until end of ROW.
3. For existing pipe material and pressure class, see (1695-D-62366).

BUREAU OF RECLAMATION

ALWAYS THINK SAFETY

U.S. DEPARTMENT OF THE INTERIOR
BUREAU OF RECLAMATION
NAVAJO-GALLUP WATER SUPPLY PROJECT
NEW MEXICO

CUTTER LATERAL - REACH 21
BOOSTER PLANT

Draft
For Reference Only
Not For Distribution

DESIGNED	JALISSA DEHAAN
DRAWN	SAM AMEEN
CHECKED	LOGON VOGT
TECH. APPR.	
APPROVED	
PEER REVIEWER	
DENVER, CO	2025-03-28

BOOSTER PLANT

E ISTING CONDITIONS AND DEMOLITION PLAN

1695-D-62338

SHEET 1

LAST SAVED DATE
2025-03-28
LAST SAVED BY
MSUTER

CAD SYSTEM
AutoCAD Civil 3D 2025 (LMS TECH)
CAD FILENAME
1695-D-62338-RD-1.DWG

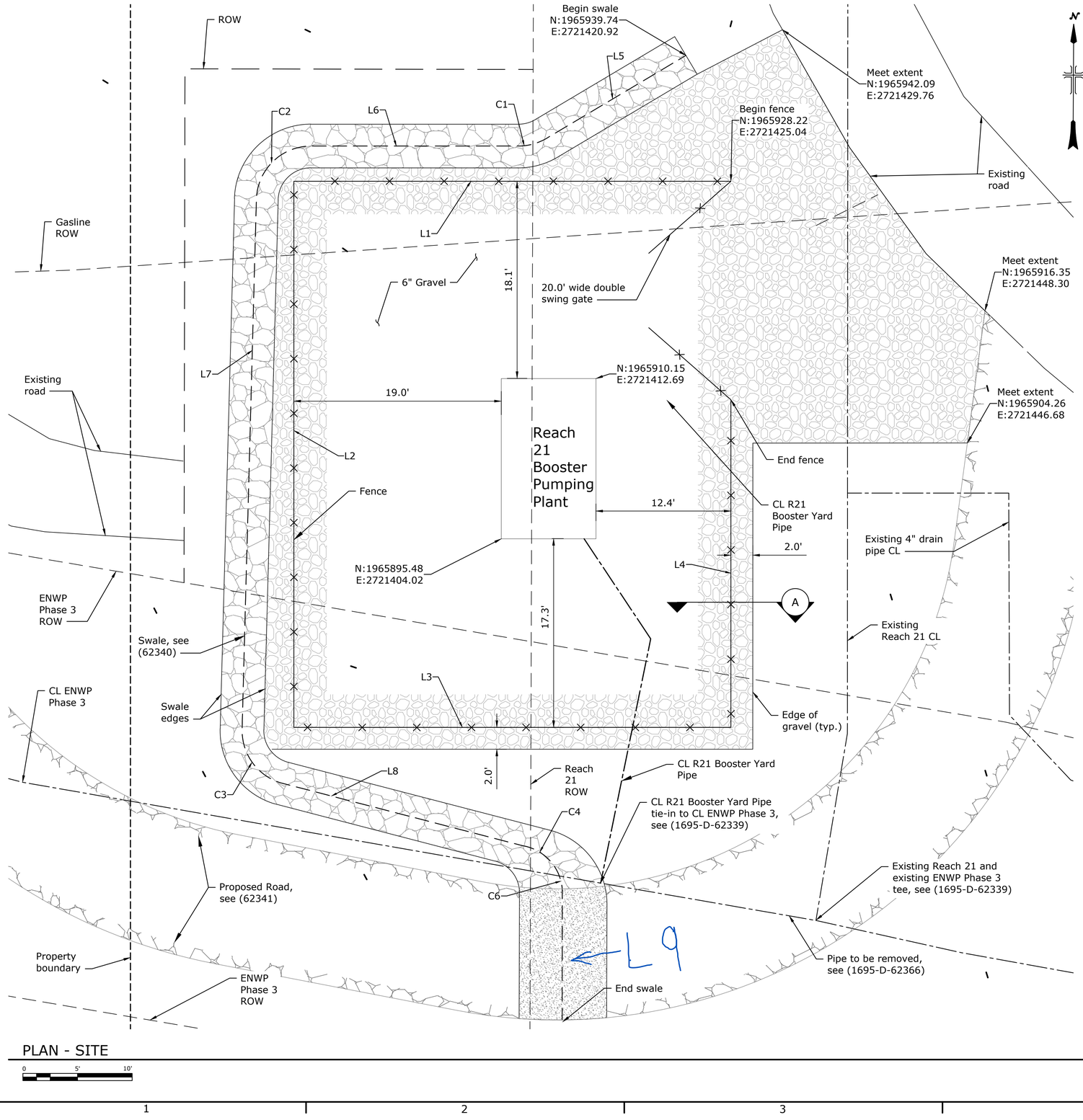

PLAN - SITE

Fence Lines Table		
Line #	Length	Direction
L1	40.00	N90 00' 00.00"E
L2	50.00	N0 00' 00.00"E
L3	40.00	N90 00' 00.00"W
L4	30.00	S0 00' 00.00"E

Swale Lines Table		
Line #	Length	Direction
L5	14.85	S59 14' 53.35"W
L6	19.00	N90 00' 00.00"W
L7	48.54	S1 32' 41.90"W
L8	22.99	S75 25' 50.44"E

Swale Curve Table					
Curve #	Length	Radius	Delta	Chord Direction	Chord Length
C1	2.68	5.00	30.75	S74 37' 27"W	2.65
C2	7.72	5.00	88.46	S45 46' 21"W	6.98
C3	6.42	5.00	73.54	S35 13' 26"E	5.99
C4	4.99	4.40	64.98	S48 12' 09"E	4.75

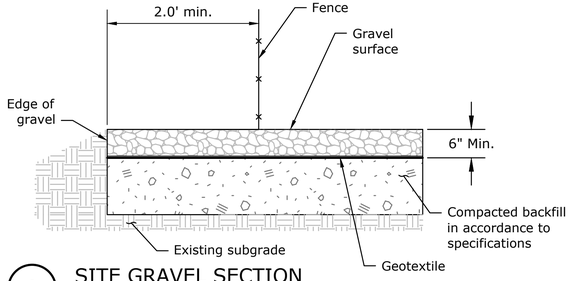

A SITE GRAVEL SECTION
NOT TO SCALE

NOTES

1. Provide erosion control blanket on slopes 4:1 or greater.
2. All dimensions are in feet unless otherwise specified.
3. For swale cross-section, see (1695-D-62340).
4. See (40-D-7016) and (40-D-7017) for standard details for chain link security fence and gate details.

BUREAU OF RECLAMATION

ALWAYS THINK SAFETY

U.S. DEPARTMENT OF THE INTERIOR
BUREAU OF RECLAMATION
NAVAJO-GALLUP WATER SUPPLY PROJECT
NEW MEXICO

CUTTER LATERAL - REACH 21

BOOSTER PUMPING PLANT

Draft
For Reference Only
Not For Distribution

JALISSA DEHAAN	DESIGNED
SAM AMEEN	DRAWN
LOGON VOGT	CHECKED
	TECH. APPR.
	APPROVED PEER REVIEWER
DENVER, CO	2025-03-28

BOOSTER PUMPING PLANT

SITE PLAN

1695-D-62339

SHEET 1

LAST SAVED DATE
2025-03-28
LAST SAVED BY
MSUTER

CAD SYSTEM
AUTOCAD 25 (LMS TECH)
CAD FILENAME
1695-D-62339-RD-1.DWG

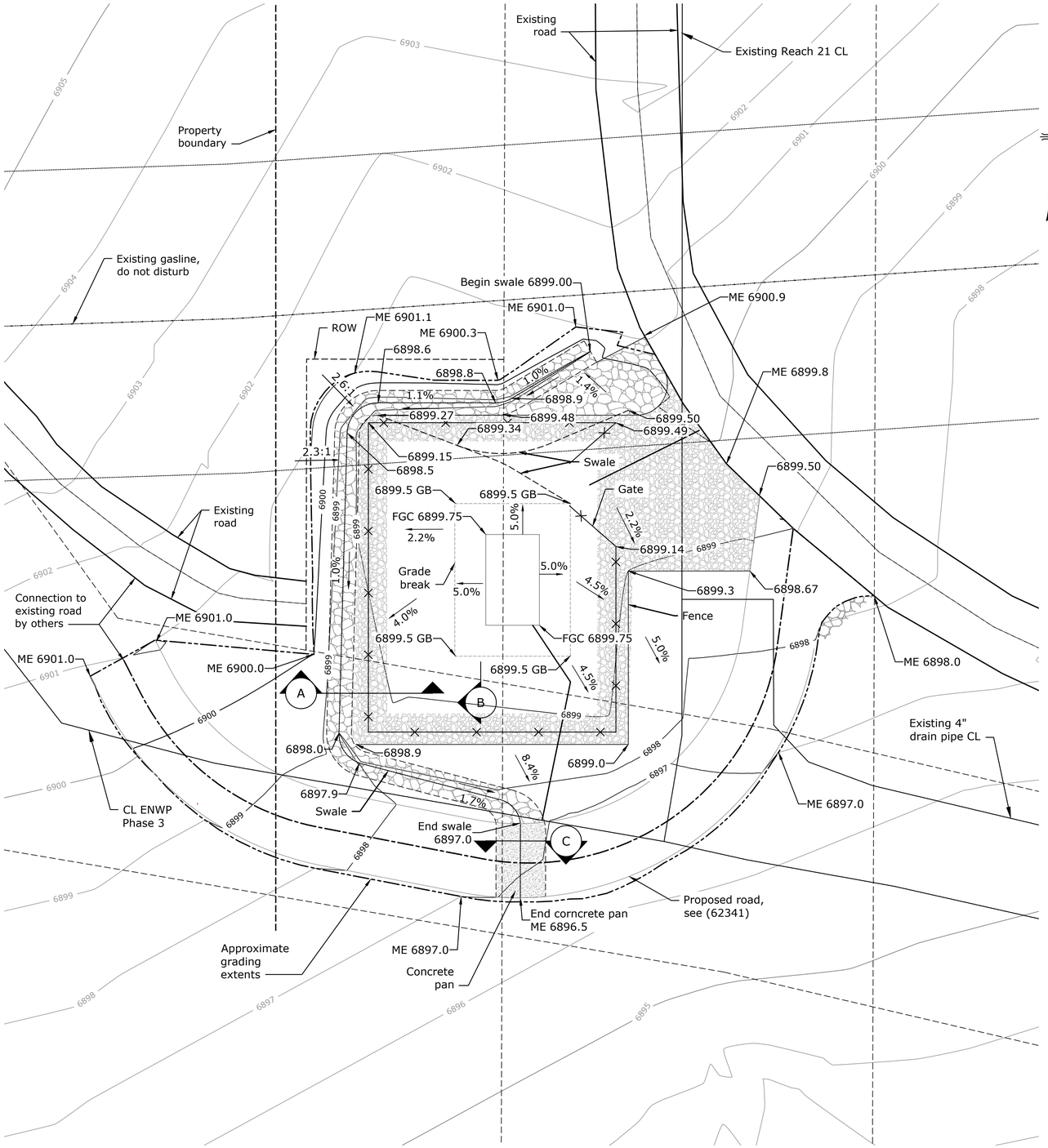

GRADING SITE PLAN

0 10' 20'

NOTES

1. Provide 5% minimum slope away from the structure for a minimum 5'.
2. Provide erosion control blanket on slopes 4:1 or greater.
3. Contractor shall field verify horizontal and vertical location of existing access road and pipelines for connections. Notify resident engineer of any conflicts.
4. See (40-D-7016) and (40-D-7017) for standard details for chain link security fence and gate details.

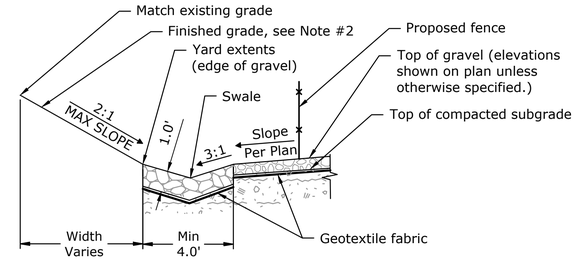

A SECTION
NOT TO SCALE

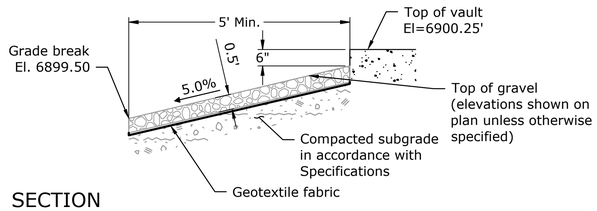

B SECTION
NOT TO SCALE

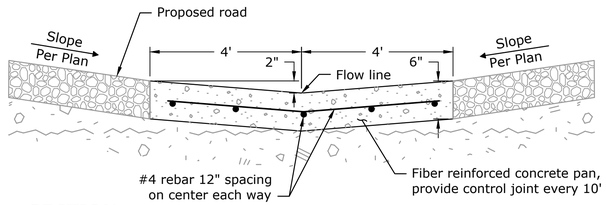

C SECTION
NOT TO SCALE

BUREAU OF RECLAMATION

ALWAYS THINK SAFETY

U.S. DEPARTMENT OF THE INTERIOR
BUREAU OF RECLAMATION
NAVAJO-GALLUP WATER SUPPLY PROJECT
NEW MEXICO

CUTTER LATERAL - REACH 21

BOOSTER PUMPING PLANT

For Internal Use Only
Draft
Not For Distribution

JALISSA DEHAAN
DESIGNED
SAM AMEEN
DRAWN
LOGON VOGT
CHECKED
TECH. APPR.
APPROVED
PEER REVIEWER
DENVER, CO 2025-03-28

BOOSTER PUMPING PLANT

GRADING SITE PLAN (VERTICAL)

1695-D-62340

SHEET 1

LAST SAVED DATE 2025-05-21
LAST SAVED BY LVOGT

CAD SYSTEM AutoCAD 24.2S (LMS TECH)
CAD FILENAME 1695-D-62340-RD-1.DWG

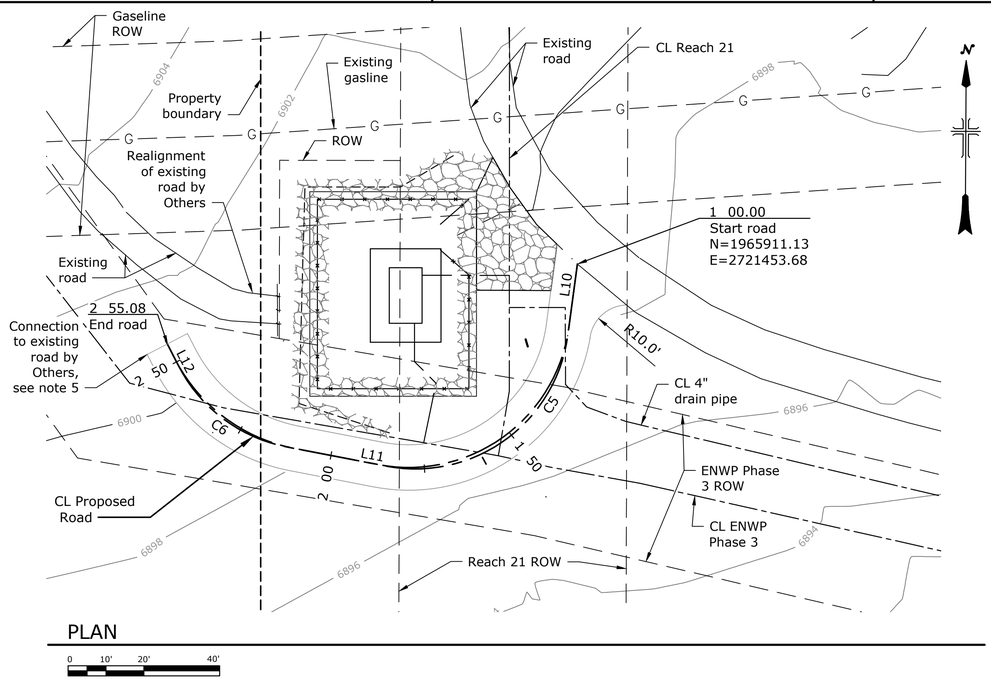

PLAN

0 10' 20' 40'

ROAD LINE DATA				
LINE #	START STA	END STA	LENGTH	BEARING
L10	1 00.00	1 19.12	19.12	S7 42' 24.28"W
L11	1 85.12	2 11.89	26.77	N79 05' 17.57"W
L12	2 48.89	2 55.08	6.19	N27 07' 58.72"W

ROAD CURVE DATA								
CURVE	BC STA.	PI STA.	EC STA.	LENGTH	RADIUS	DELTA	TANGENT	CHORD
C5	1 19.12	1 62.03	1 85.12	66.00	40.57	93 12'18"	42.91	58.96
C6	2 11.89	2 31.77	2 48.89	37.00	40.80	51 57'19"	19.88	35.75

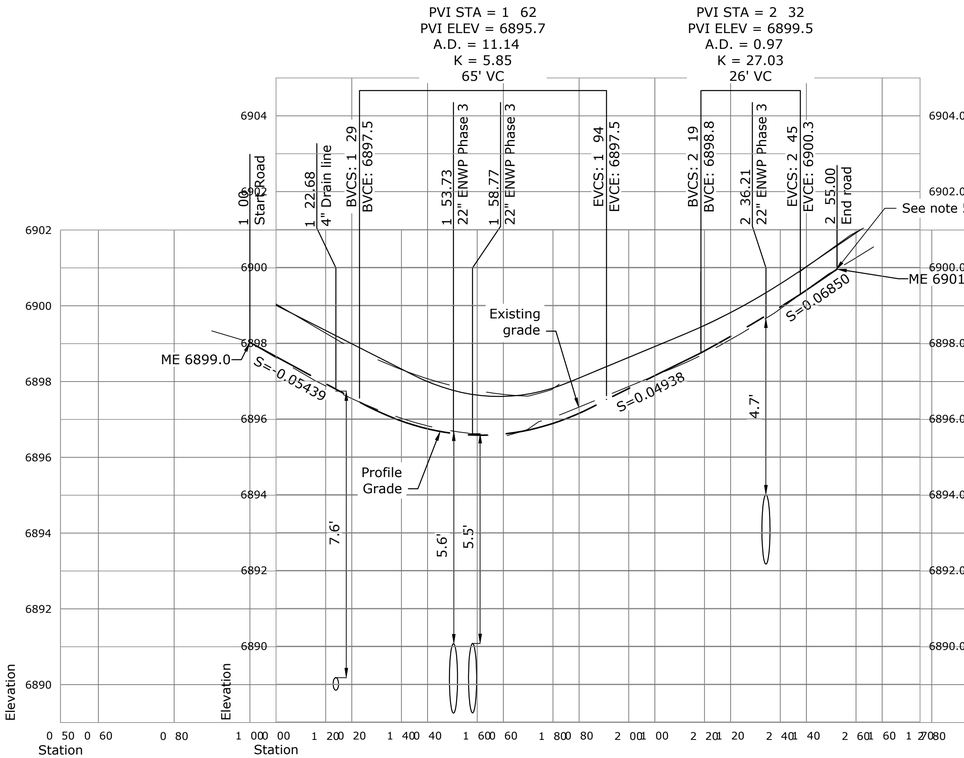

PROFILE

Note: Vertical scale exaggerated 10x for clarity

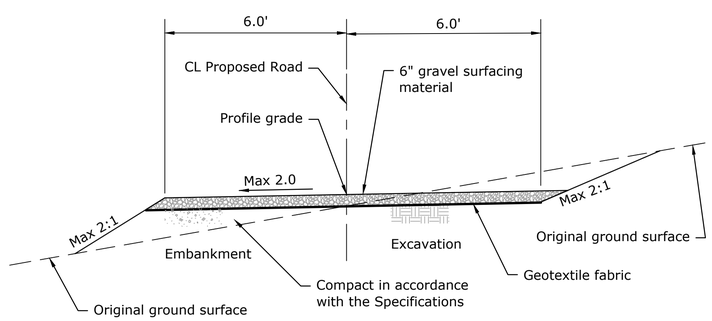

TYPICAL ROAD SECTION

NOT TO SCALE

NOTES

1. Design speed 15 mph.
2. All control point coordinates are shown in New Mexico State Coordinate System, West Zone (NAD83) horizontal datum. A ground scale factor of 1.00026509926 was used.
3. All vertical elevations are based on NAVD88 vertical datum.
4. All dimensions are in feet unless otherwise specified.
5. End road regrading within ENWP Phase 3 ROW.
6. Realignment and connection of proposed and existing roads by others.

BUREAU OF RECLAMATION

ALWAYS THINK SAFETY

U.S. DEPARTMENT OF THE INTERIOR
BUREAU OF RECLAMATION
NAVAJO-GALLUP WATER SUPPLY PROJECT
NEW MEXICO

CUTTER LATERAL - REACH 21

BOOSTER PUMPING PLANT

Draft
For Internal Use Only
Not For Distribution

JALISSA DEHAAN	DESIGNED
SAM AMEEN	DRAWN
LOGON VOGT	CHECKED
	TECH. APPR.
	APPROVED PEER REVIEWER
DENVER, CO	2025-05-19

BOOSTER PUMPING PLANT

ROAD REGRADING SITE PLAN

1695-D-62341

SHEET 1

LAST SAVED DATE
2025-05-19
LAST SAVED BY
SAMEEN

CAD SYSTEM
AutoCAD 2025 (LMS TECH)
CAD FILE NAME
1695-D-62341-RD-1.DWG

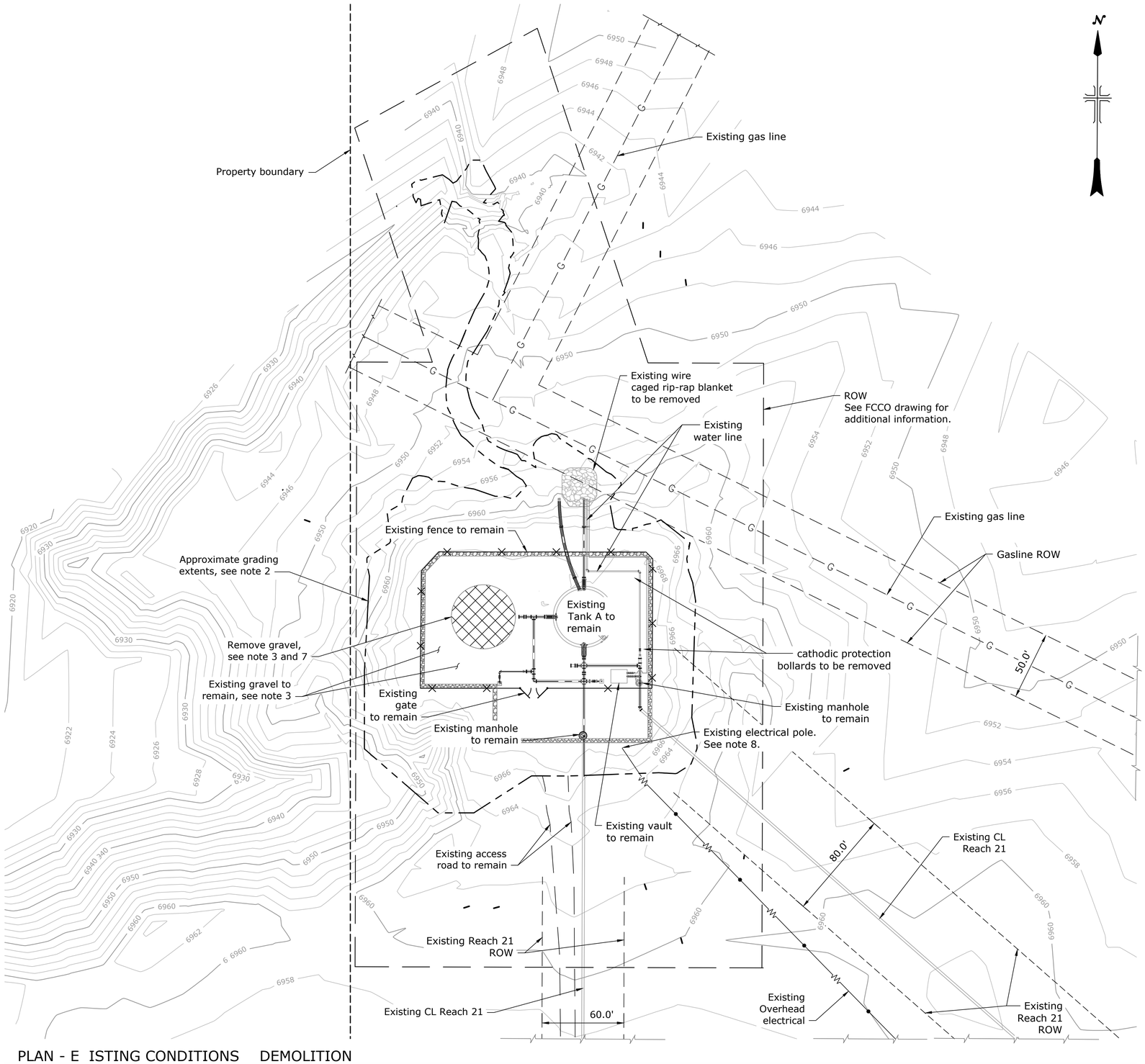

PLAN - E ISTING CONDITIONS DEMOLITION

NOTES:

1. Contractor to protect existing infrastructure. Any existing items damaged during construction shall be repaired or replaced at no additional cost.
2. Approximate grading extents, clear and screen area for vegetation, large rocks, etc. before backfilling and grading. see Specifications for additional information
3. Remove and replace localized gravel low points at the direction of the COR.
4. The existing site linework is based on the As-built drawings from Souder, Miller Associates (SMA) dated October 2020.
5. The existing contours are based on survey data from March 2024.
6. Existing tank A and yard to remain
7. Remove gravel for tank installation
8. Underground electrical conduit not located, to be field located by contractor prior to start of work.

BUREAU OF RECLAMATION

ALWAYS THINK SAFETY

U.S. DEPARTMENT OF THE INTERIOR
BUREAU OF RECLAMATION
NAVAJO-GALLUP WATER SUPPLY PROJECT
NEW MEXICO

CUTTER LATERAL - REACH 21

REGULATING TANK 3

Draft
For Internal Use Only
Not For Construction

SAM AMEEN	DESIGNED
SAM AMEEN	DRAWN
LOGON VOGT	CHECKED
	TECH. APPR.
	APPROVED PEER REVIEWER
DENVER, CO	2025-03-28

REGULATING TANK 3

E ISTING CONDITIONS

1695-D-62342

SHEET 1

LAST SAVED DATE
2025-05-19
LAST SAVED BY
LVOGT

CAD SYSTEM
AUTOCAD CIVIL 3D (LMS TECH)
CAD FILE NAME
1695-D-62342-RD-1.DWG

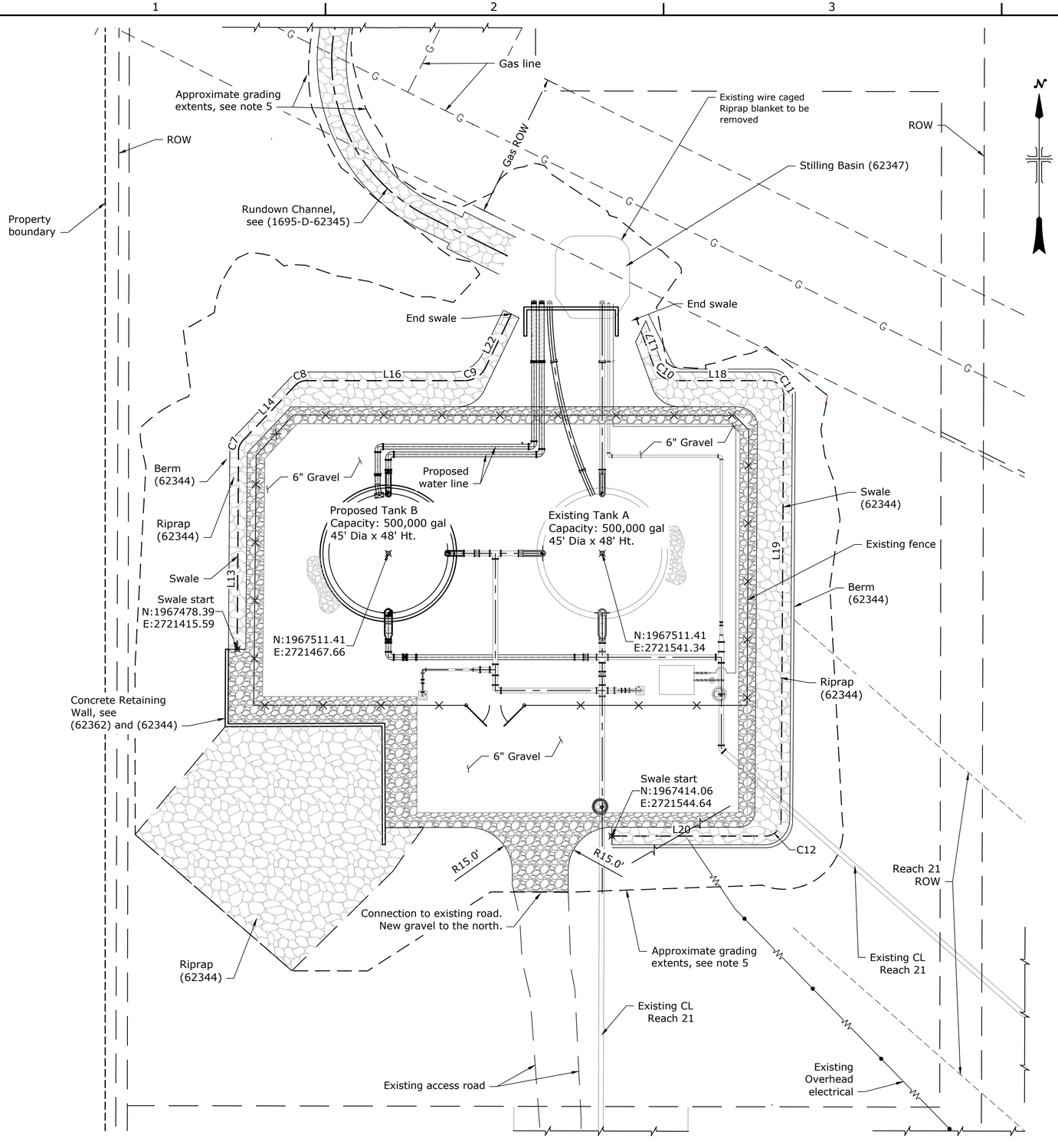

PLAN-SITE LAYOUT

Swale Curve Table					
Curve #	Length	Radius	Delta	Chord Direction	Chord Length
C7	3.76	5.00	43.04	N21 55' 22"E	3.67
C8	3.95	5.00	45.25	N66 04' 02"E	3.85
C9	8.98	8.00	64.28	N57 51' 14"E	8.51
C10	8.79	8.00	62.91	S57 10' 07"E	8.36
C11	7.92	5.00	90.79	S44 36' 14"E	7.12
C12	8.45	5.38	90.00	N48 54' 24"E	7.61

Swale Line Table		
Line #	Length	Direction
L13	68.29	N0 24' 02.71"E
L14	26.50	N43 26' 41.31"E
L16	54.80	N89 59' 39.04"E
L17	18.19	S19 52' 26.54"E
L18	32.60	S89 59' 48.74"E
L19	146.85	N0 21' 33.59"E
L20	52.57	S89 58' 53.02"E
L22	15.42	N25 42' 48.38"E

NOTES:

1. Coordinates shown are grid based on New Mexico State Plane, West Zone coordinate system. North American Datum of 1983 (NAD83) in U.S. feet.
2. Contractor to verify existing grades and utilities prior to construction in accordance with the Specifications. Notify engineer of any conflicts or discrepancies immediately.
3. Contractor to coordinate with COR for localized repairs of gravel surfacing in the existing yard as needed.
4. Existing fence can be removed if needed but shall be replaced as shown in this drawing.
5. Clear and screen area for vegetation, large rocks, etc. before grading and backfilling. See Specifications for additional information.

BUREAU OF RECLAMATION

ALWAYS THINK SAFETY

U.S. DEPARTMENT OF THE INTERIOR
BUREAU OF RECLAMATION
NAVAJO-GALLUP WATER SUPPLY PROJECT
NEW MEXICO

CUTTER LATERAL - REACH 21

REGULATING TANK 3

Draft
For Internal Use Only
Not For Distribution

SAM AMEEN	DESIGNED
SAM AMEEN	DRAWN
LOGON VOGT	CHECKED
	TECH. APPR.
	APPROVED PEER REVIEWER
DENVER, CO	2025-03-28

REGULATING TANK 3

SITE PLAN (HORIZONTAL)

1695-D-62343

SHEET 1

LAST SAVED DATE
2025-05-19
LAST SAVED BY
LVOGT

CAD SYSTEM
AutoCAD Civil 3D (LMS TECH)
CAD FILENAME
1695-D-62343-RD-1.DWG

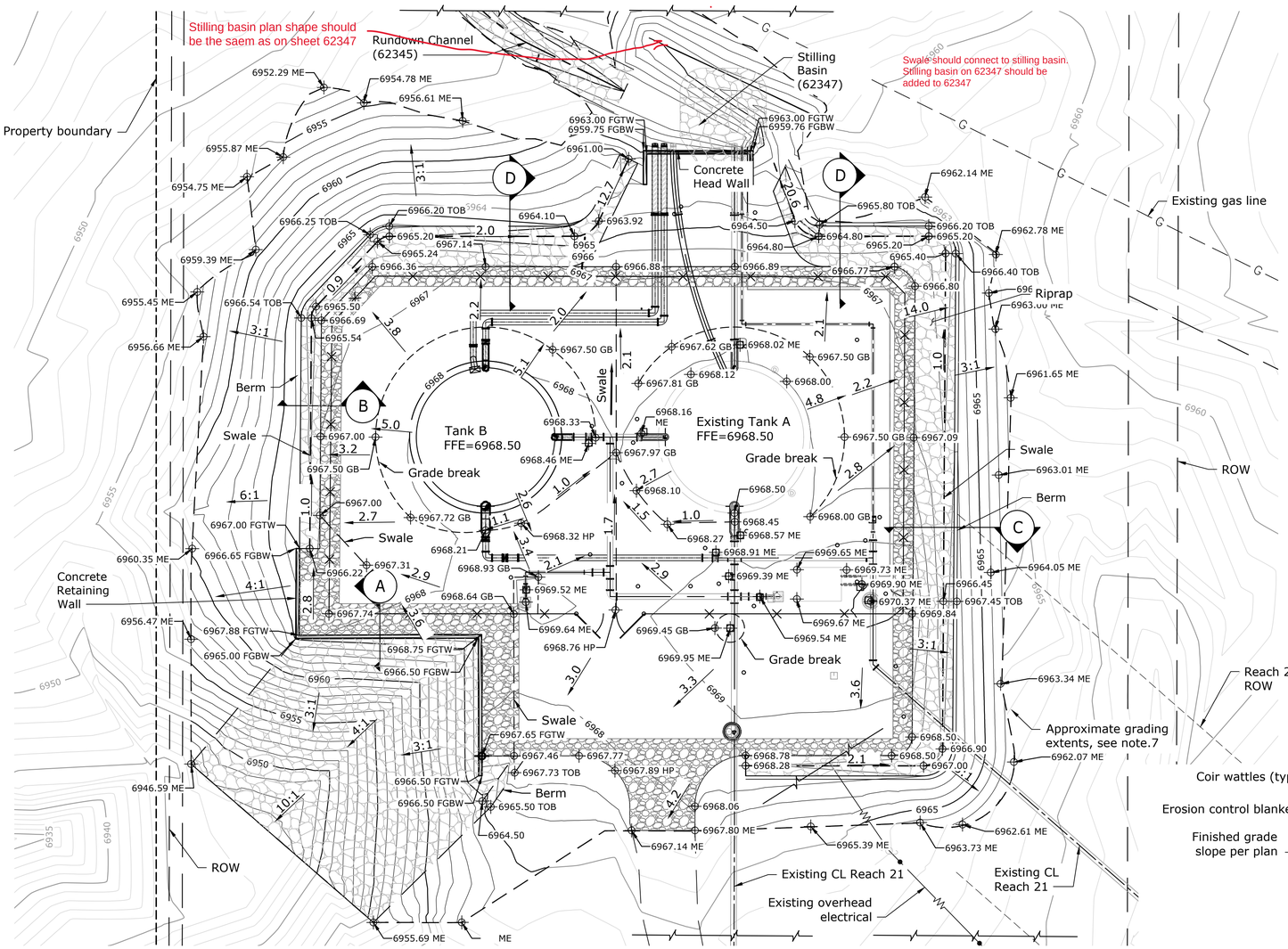

PLAN - GRADING

Note 2. Change from 4:1 to 6:1.
Note 6 Add geomembrane

NOTES

1. Sloping, shoring, percent of compaction, and benching shall be in accordance with the Specifications.
2. Provide erosion control blankets on slopes greater than or equal to 4:1.
3. Contractor shall verify existing grades and utilities prior to construction in accordance with the Specifications. Notify resident engineer immediately of any conflicts or discrepancies.
4. Spot elevations are shown to top of gravel, top of finished grade, or flowline unless otherwise specified.
5. Contractor to extend existing tank's perimeter drain outfall pipe to daylight and provide positive drainage.
6. See specifications for geotextile fabric information.
7. Clear and screen area for vegetation, large rocks, etc. before grading and backfilling. See Specifications for additional information.

Add coir wattles at the mid-point and toe of all tank site sideslopes. Need to add installation details. I think NGWSP 4A and 4B has the latest drawings.

ABBREVIATIONS

ME - Match existing
TOB - Top of berm
GB - Grade break
FGTW - Finished grade at top of wall
FGBW - Finished grade at bottom of wall
HP - High point
FFE - Finished floor elevation

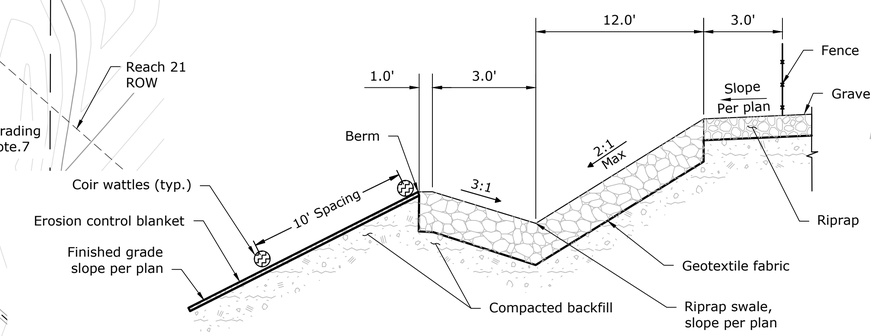

D SECTION
NOT TO SCALE

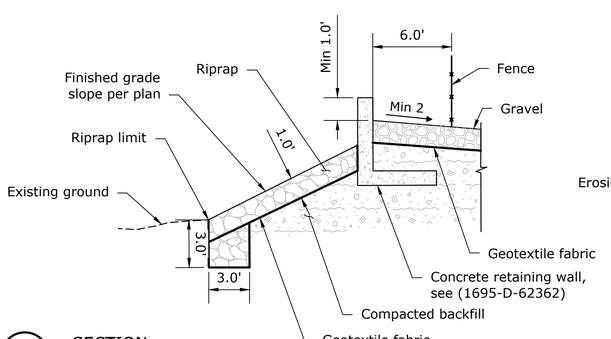

A SECTION
NOT TO SCALE

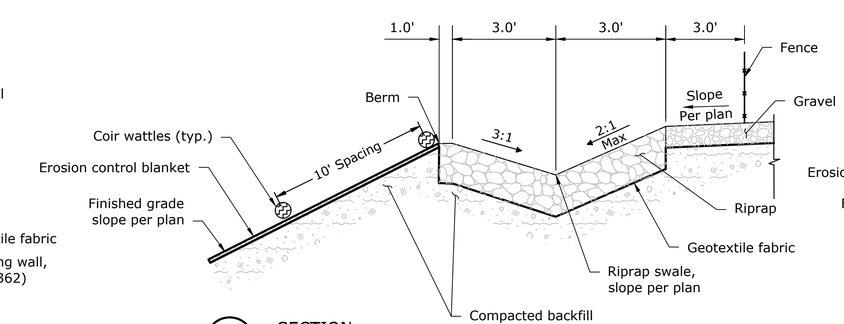

B SECTION
NOT TO SCALE

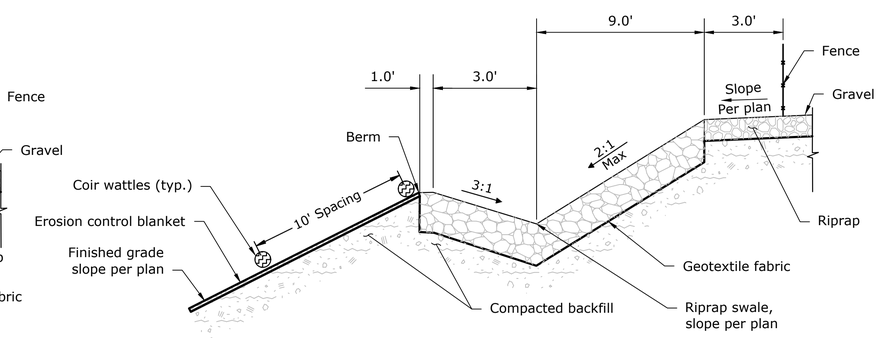

C SECTION
NOT TO SCALE

BUREAU OF RECLAMATION

ALWAYS THINK SAFETY

U.S. DEPARTMENT OF THE INTERIOR
BUREAU OF RECLAMATION
NAVAJO-GALLUP WATER SUPPLY PROJECT
NEW MEXICO

CUTTER LATERAL - REACH 21

REGULATING TANK 3

Draft
Not For Distribution
For Internal Use Only

SAM AMEEN
DESIGNED
SAM AMEEN
DRAWN
LOGON VOGT
CHECKED
TECH. APPR.
APPROVED
PEER REVIEWER
DENVER, CO 2025-03-28

REGULATING TANK 3

GRADING SITE PLAN (VERTICAL)

1695-D-62344

SHEET 1

LAST SAVED DATE 2025-05-20
LAST SAVED BY LVOGT

CAD SYSTEM AutoCAD 24.2S (LMS TECH)
CAD FILENAME 1695-D-62344-RD-1.DWG

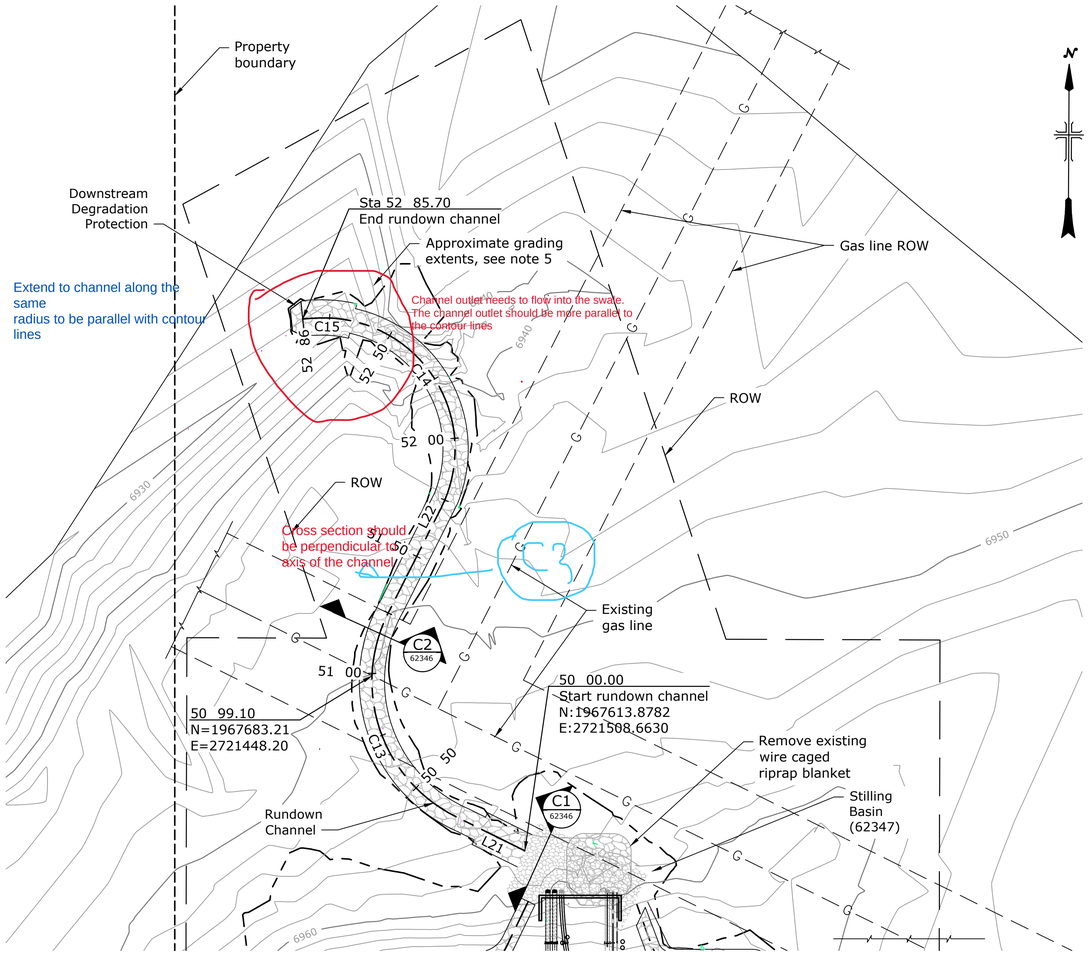

PLAN - RUNDOWN CHANNEL

0 30' 60'

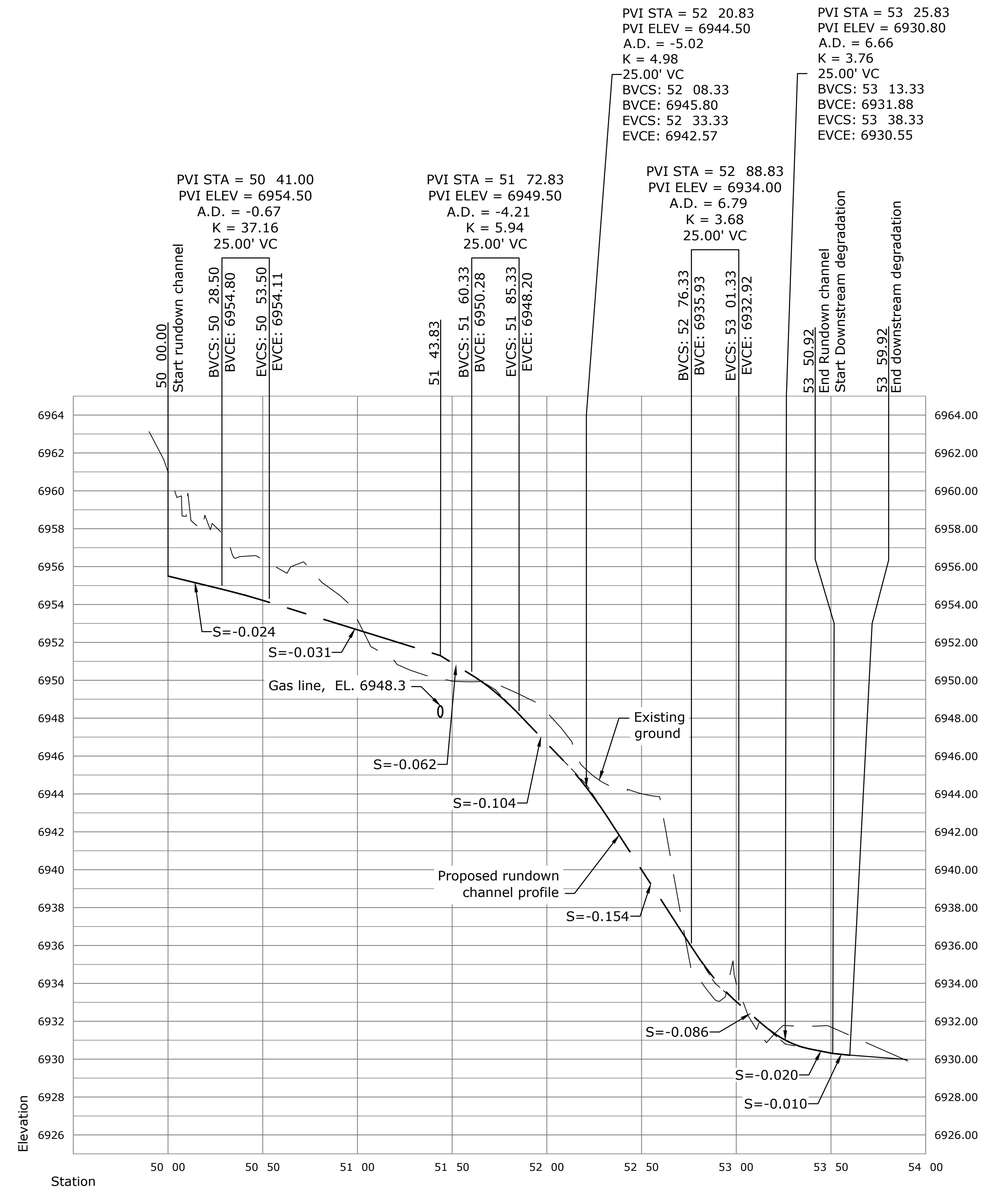

PROFILE - RUNDOWN CHANNEL

Note: Vertical scale exaggerated 10x for clarity

Rundown Channel Curve Table					
Curve #	Radius	Length	Delta	Chord Direction	Chord Length
C13	59.82	94.36	90.3760	N18 25' 56.80"W	84.87
C14	51.97	107.55	118.5777	N32 31' 59.80"W	89.36
C15	51.97	107.55	118.5777	N32 31' 59.80"W	89.36

Rundown Channel Line Table		
LINE	LENGTH	BEARING
L21	30.47	N63 37'14"W
L22	46.58	N26 45'20"E

NOTES:

1. Coordinates shown are grid based on New Mexico State Plane, West Zone coordinate system. North American Datum of 1983 (NAD83) in U.S. feet.
2. Contractor to verify existing grades and utilities prior to construction in accordance with the Specifications. Notify resident engineer of any conflicts or discrepancies immediately.
3. Clear and screen area for vegetation, large rocks, etc. before grading and backfilling. See Specifications for additional information.

BUREAU OF RECLAMATION

ALWAYS THINK SAFETY

U.S. DEPARTMENT OF THE INTERIOR
BUREAU OF RECLAMATION
NAVAJO-GALLUP WATER SUPPLY PROJECT
NEW MEXICO

CUTTER LATERAL - REACH 21

REGULATING TANK 3

Draft
For Internal Use Only
Not For Distribution

SAM AMEEN
DESIGNED
SAM AMEEN
DRAWN
DREW BAIRD
CHECKED
TECH. APPR.
APPROVED
PEER REVIEWER
DENVER, CO 2025-03-28

REGULATING TANK 3

RUNDOWN CHANNEL PLAN PROFILE

1695-D-62345

SHEET 1

LAST SAVED DATE 2025-05-19
LAST SAVED BY LVOGT

CAD SYSTEM AutoCAD 24.2S (LMS TECH)
CAD FILENAME 1695-D-62345-RD-1.DWG

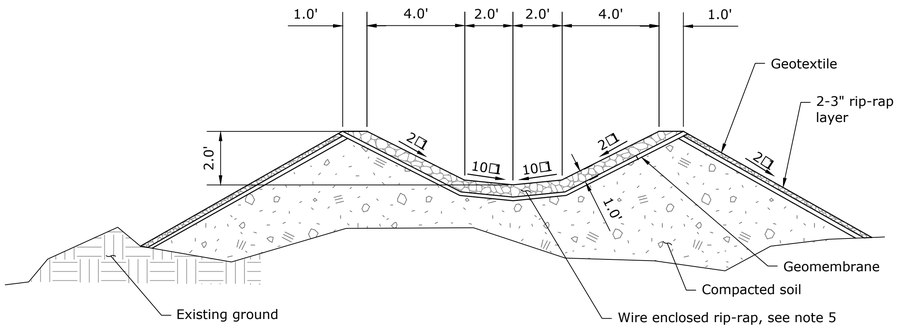

C1 CROSS SECTION PLAN FOR SECTION-I
NOT TO SCALE

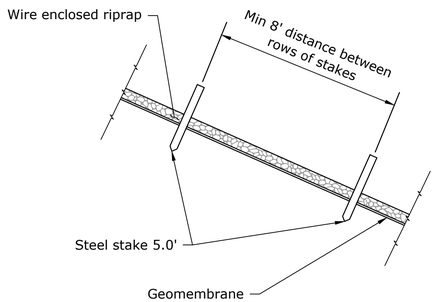

STAKE SPACING
NOT TO SCALE

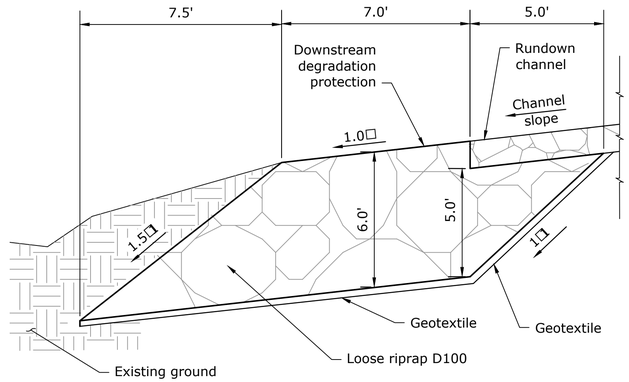

D DOWNSTREAM DEGRADATION PROTECTION
NOT TO SCALE

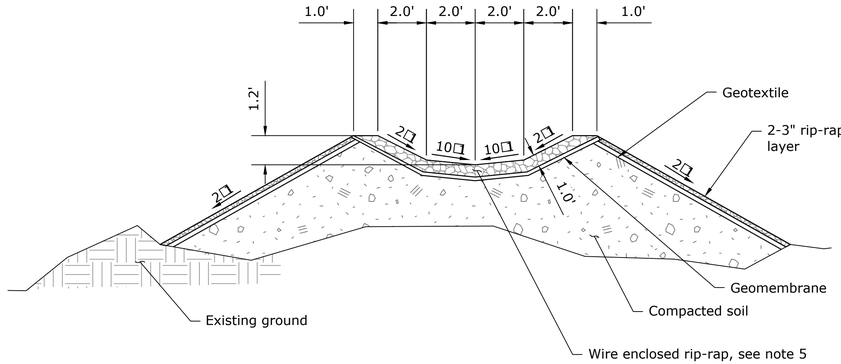

Need Geomembrane spec
for channel
Have spec for tank geomembrane.
Think this geomembrane could be thinner

C2 CROSS SECTION PLAN FOR SECTION-II
NOT TO SCALE

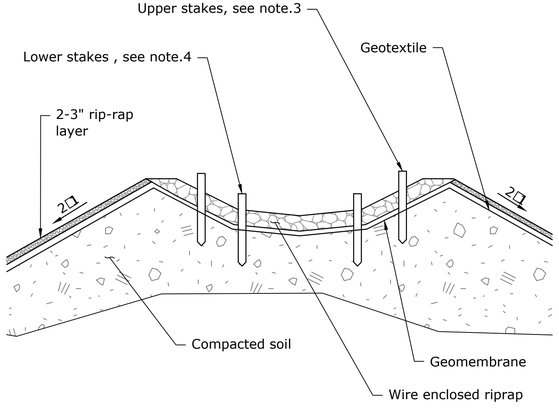

STAKE DETAIL
NOT TO SCALE

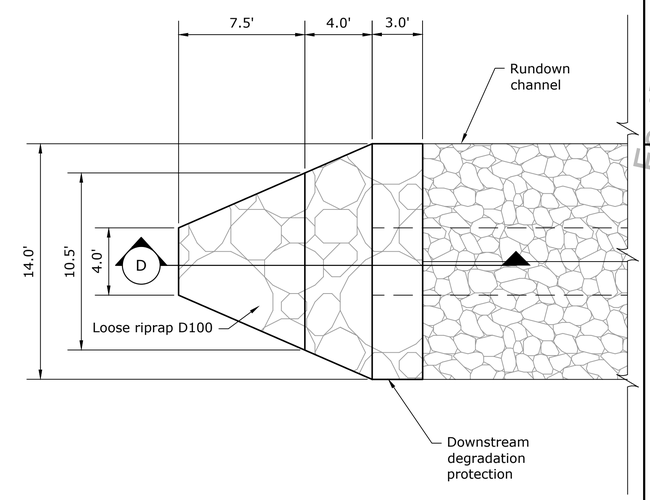

DOWNSTREAN DEGRADATION PROTECTION
NOT TO SCALE

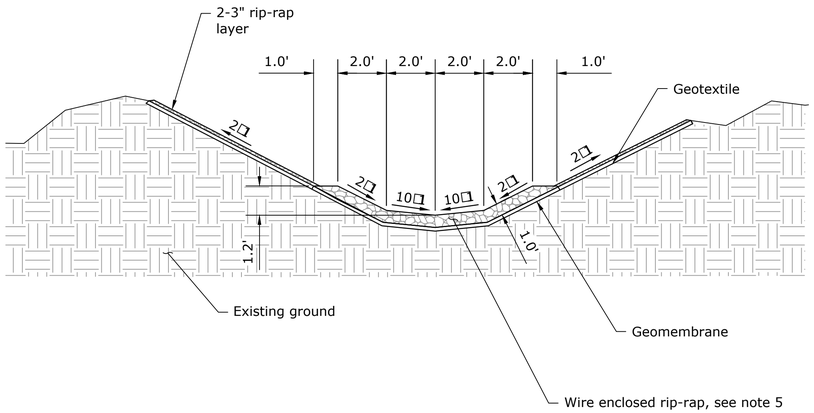

C3 CROSS SECTION PLAN FOR SECTION-II
NOT TO SCALE

NOTES□

1. Channel cross section plan-I for sections 0+00 to 0+20, and 2+80 to 3+17
2. Channel cross section plan-II for all other sections.
3. Install upper stakes at 1.0 feet above the bottom of Section I and at 0.5 feet above the bottom of Section II.
4. Lower stakes installed at transition between 10□ slope and 2□ slope
5. Wire enclosed rip-rap materials provided and construction shall be in accordance with the NMDOT section 602 specifications and standard drawings, unless otherwise noted in these drawings.

BUREAU OF RECLAMATION

ALWAYS THINK SAFETY

U.S. DEPARTMENT OF THE INTERIOR
BUREAU OF RECLAMATION
NAVAJO-GALLUP WATER SUPPLY PROJECT
NEW MEXICO

CUTTER LATERAL - REACH 21
REGULATING TANK 3

For Internal Use Only
Draft
Not For Distribution

VINCENT BENOIT
DESIGNED
SAM AMEEN
DRAWN
DREW BAIRD
CHECKED
TECH. APPR.
APPROVED
PEER REVIEWER
DENVER, CO 2025-05-19

REGULATING TANK 3

RUNDOWN CHANNEL

1695-D-62346
SHEET 1

LAST SAVED DATE 2025-05-19
LAST SAVED BY SAMEEN

CAD SYSTEM AutoCAD 24.2S (LMS TECH)
CAD FILENAME 1695-D-62346-RD-1.DWG

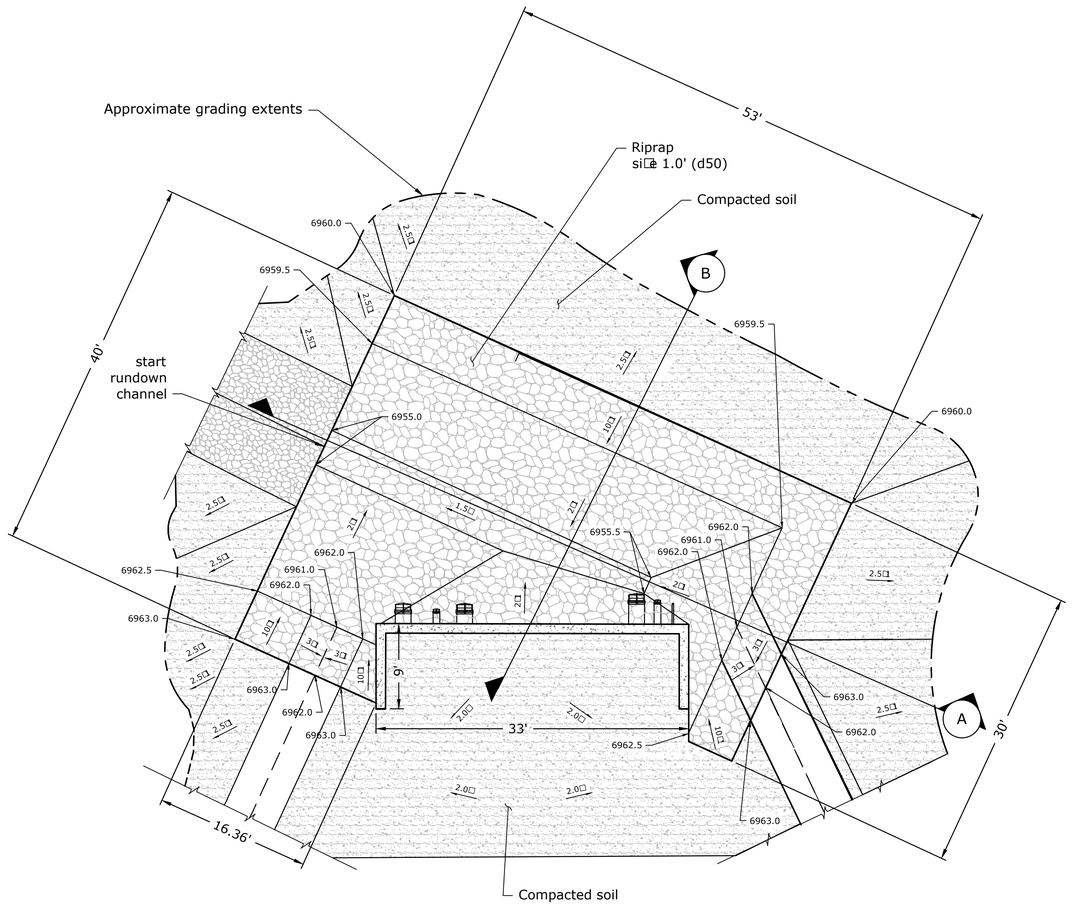

PLAN - STILLING BASIN

NOT TO SCALE

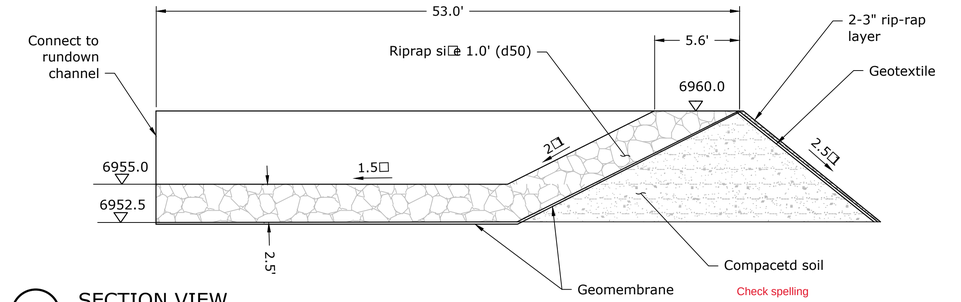

A SECTION VIEW

NOT TO SCALE

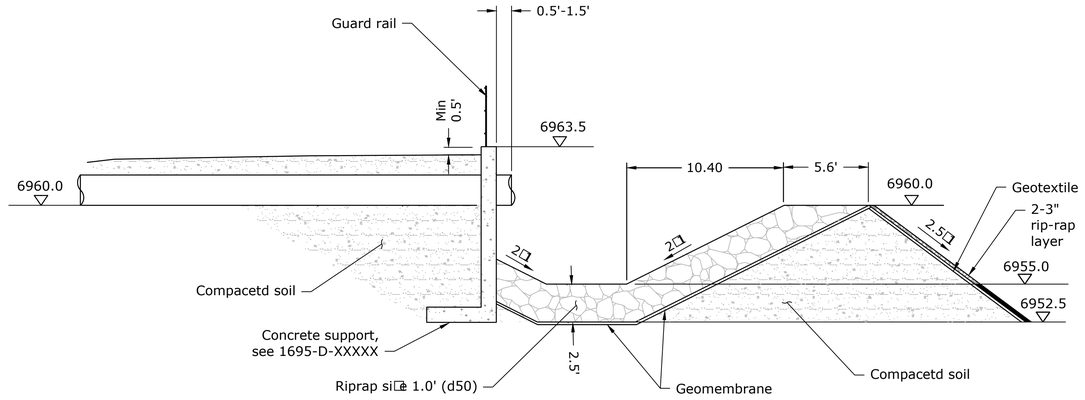

B SECTION VIEW

NOT TO SCALE

BUREAU OF RECLAMATION

ALWAYS THINK SAFETY

U.S. DEPARTMENT OF THE INTERIOR
BUREAU OF RECLAMATION
NAVAJO-GALLUP WATER SUPPLY PROJECT
NEW MEXICO

CUTTER LATERAL - REACH 21

REGULATING TANK 3

For Internal Use Only
Draft
Not For Distribution

SAM AMEEN
DESIGNED
SAM AMEEN
DRAWN
DREW BAIRD
CHECKED
TECH. APPR.
APPROVED
ADMIN APPROVAL
DENVER, CO 2025-05-19

REGULATING TANK 3

STILLING BASIN

1695-D-62347

SHEET 1

LAST SAVED DATE 2025-05-19
LAST SAVED BY SAMEEN

CAD SYSTEM AutoCAD 24.2S (LMS TECH)
CAD FILENAME 1695-D-62347-RD-1.DWG

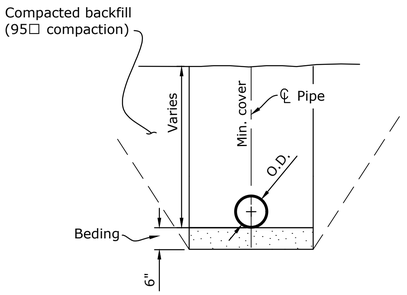

PIPE O.D.<= 10" MATERIAL TYPE 1, SELECT MATERIAL

Not to scale

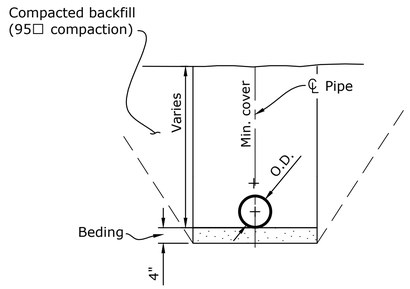

PIPE O.D,<= 10" -MATERIAL TYPE 2+3, SELECT MATERIAL

Not to scale

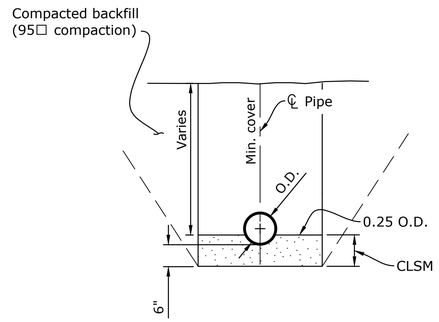

PIPE O.D<= 10"-MATERIA TYPE 1-3, CLSM

Not to scale

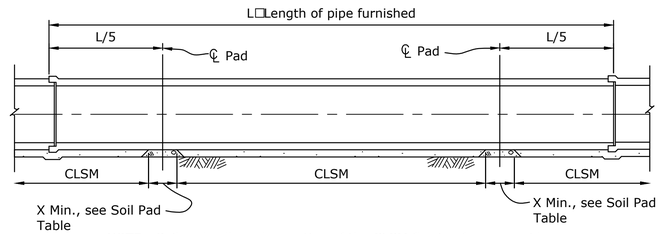

NOTE□ Soil pads allow observation of the CLSM flowing from one side of the pipe to the other. See Note 8.

CLSM INSTALLATION WITH SOIL PADS

TYPICAL FOR ALL PIPE TYPES

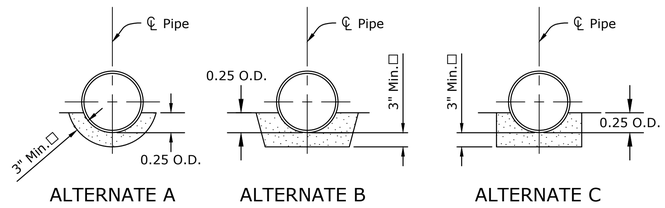

ALTERNATE A ALTERNATE B ALTERNATE C

ACCEPTABLE TRENCH BOTTOMS FOR CLSM

□6" Min required between bottom of pipe and rock surfaces

TABLE OF PAY DIMENSIONS		
PIPE Dn (inches)	Dp (inches)	Wp (feet)
20", 8"	1.167 Dn	1/12 (1.167 Dn+36)

SOIL PAD TABLE	
PIPE I.D.	X
12" - 27"	.05L
30" - 66"	.10L

MATERIAL GRADATION LIMITS FOR EMBEDMENT	
Size □	Percent by Weight
Passing No. 200 sieve	12 or less
Passing No. 50 sieve	25 or less

□Maximum size shall not exceed ¾-inch

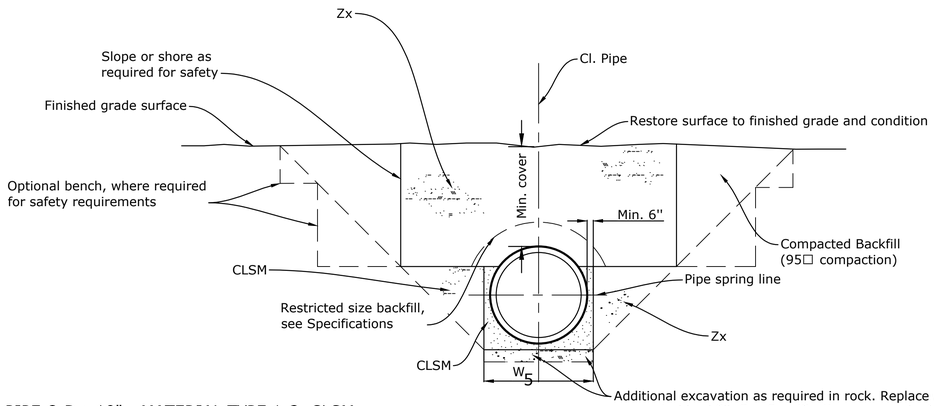

PIPE O.D.>10" - MATERIAL TYPE 1-3, CLSM

Note□Instability of the native material may cause difficulties when excavating trench slopes around the pipe

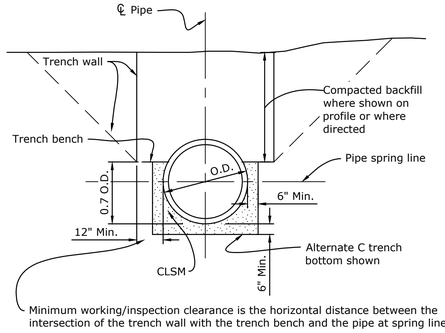

Minimum working/inspection clearance is the horizontal distance between the intersection of the trench wall with the trench bench and the pipe at spring line

MATERIAL TYPE 1 TRENCH

Not to scale

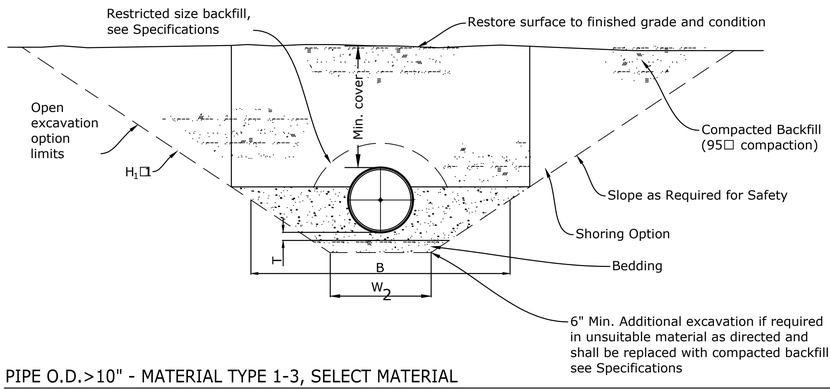

PIPE O.D.>10" - MATERIAL TYPE 1-3, SELECT MATERIAL

Not to scale

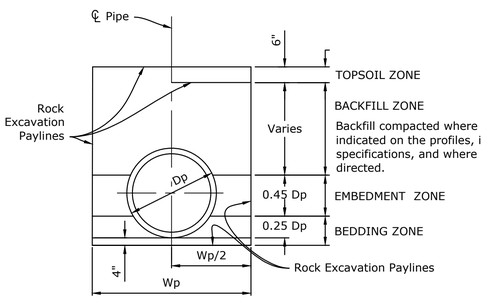

ROCK EXCAVATION PAYLINES AND TRENCH DEFINITIONS

ALL TYPES OF PIPE (Not to scale)

NATIVE MATERIAL PROPERTIES

MATERIAL TYPE 1 - Typical trench wall materials would be rock□materials described as shale, claystone, mudstone, siltstone or sandstone□highly cemented soils□sands, gravels, and silty or clayey material with in-place densities of 95□ Standard Proctor or higher.

MATERIAL TYPE 2 - Typical trench wall materials would include silty or clayey material or sands and gravels with in-place densities between 85□ and 95□ Standard Proctor.

MATERIAL TYPE 3 - Typical trench wall materials would include elastic silts, low density silty or clayey soils, or low-density cohesionless soils with a density below 85□ Standard Proctor.

Trench Material Type locations, based on the above Native Material Properties and geology investigation, have been identified and correspond to minimum side clearance widths listed in the Side Clearance Table. Material Type 1's inferred bedrock surface is shown in the profile on drawings. Material Types 2 and 3 locations are listed in Table 31 23 22A in the specifications.

NOTES

1. Drawing not to scale.
2. O.D is the outside diameter, in inches, of the pipe actually installed.
3. Dn is the nominal pipe diameter.
4. CLSM is Controlled Low Strength Material. See specifications for details.
5. Sloping, shoring, and benching shall be in accordance with Reclamation Safety and Health Standards.
6. CLSM is required in the bedding for all pipe types.
7. Warning tape and tracer wire not shown for plastic pipe types, but are required. See specifications for details.
8. Other material may be submitted in lieu of soil pads for approval. Soil pad materials must not exceed the compressive strength of the CLSM.
9. CLSM is required for the embedment when there is expansive soils and the native trench material's plastic index exceeds 25 as listed in Table 1.2 of Reclamation's Earth Manual.
10. CLSM is required for the embedment when saturated soil is encountered in the pipe trench.
11. Install pipe based on these specifications or pipe manufacturer's, whichever is more stringent.

— BUREAU OF — RECLAMATION

ALWAYS THINK SAFETY

U.S. DEPARTMENT OF THE INTERIOR
BUREAU OF RECLAMATION
NAVAJO GALLUP WATER SUPPLY PROJECT
NEW MEXICO

CUTTER LATERAL - REACH 21

BOOSTER PLANT AND REGULATING TANK 3B

For Information Only
Draft
Not for Distribution

JALISSA DEHAAN
DESIGNED
SAM AMEEN
DRAWN
LOGON VOGT
CHECKED
TECH. APPR.
APPROVED Civil Engineer
PEER REVIEWER
DENVER, CO 2025-05-19

TRENCH

SECTIONS AND DETAILS

1695-D-62348

SHEET 1

LAST SAVED DATE
2025-05-19 11:40:00
LAST SAVED BY
SAMEEN

CAD SYSTEM
AutoCAD Civil 3D 2025 (LMS TECH)
CAD FILENAME
1695-D-62348-RD-1.DWG

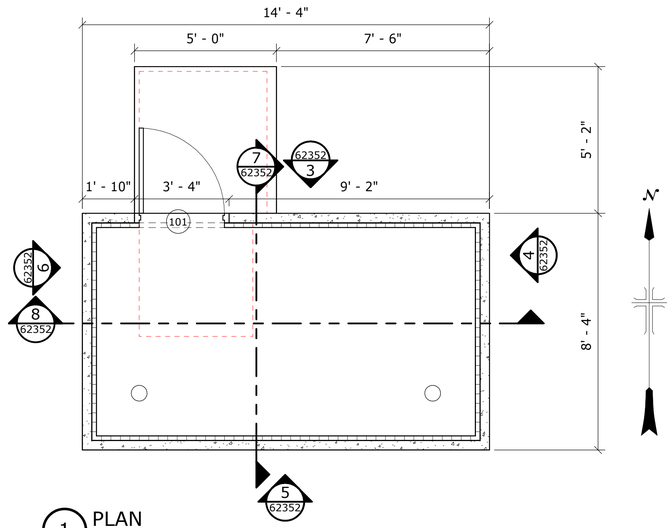

1 PLAN

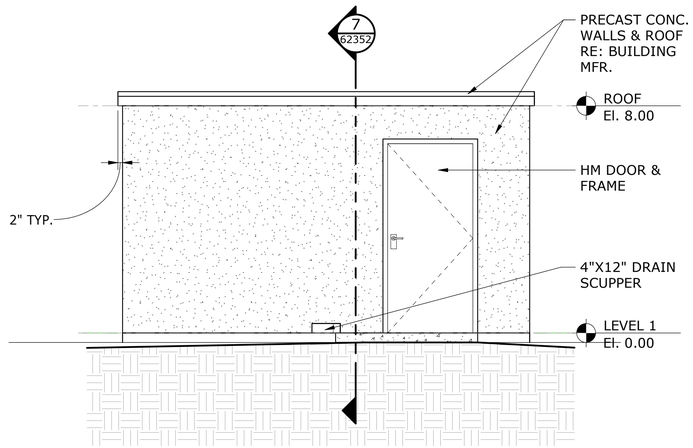

3 NORTH ELEVATION

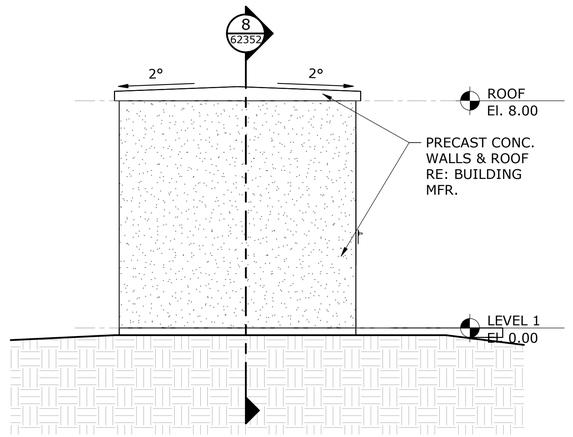

4 EAST ELEVATION

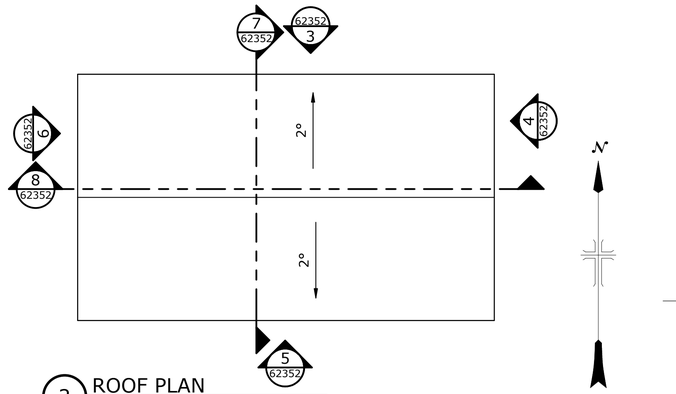

2 ROOF PLAN

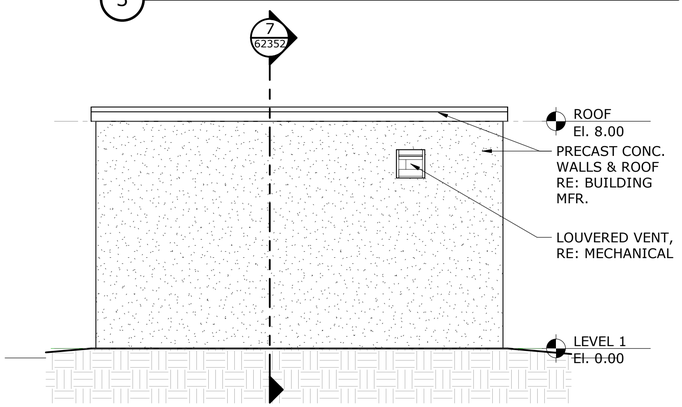

5 SOUTH ELEVATION

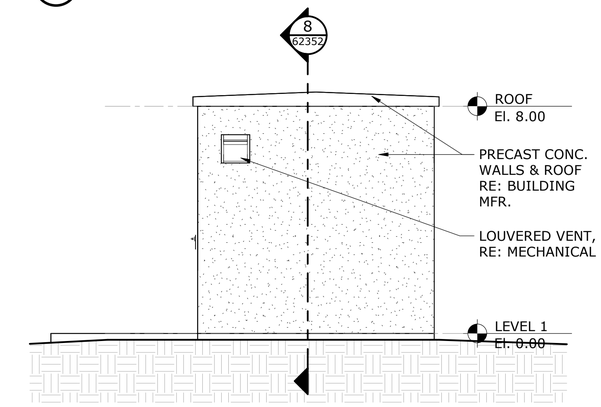

6 WEST ELEVATION

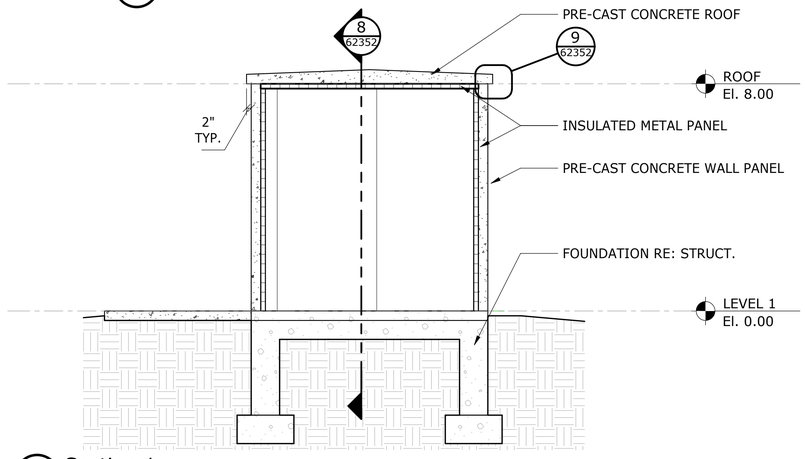

7 Section 1

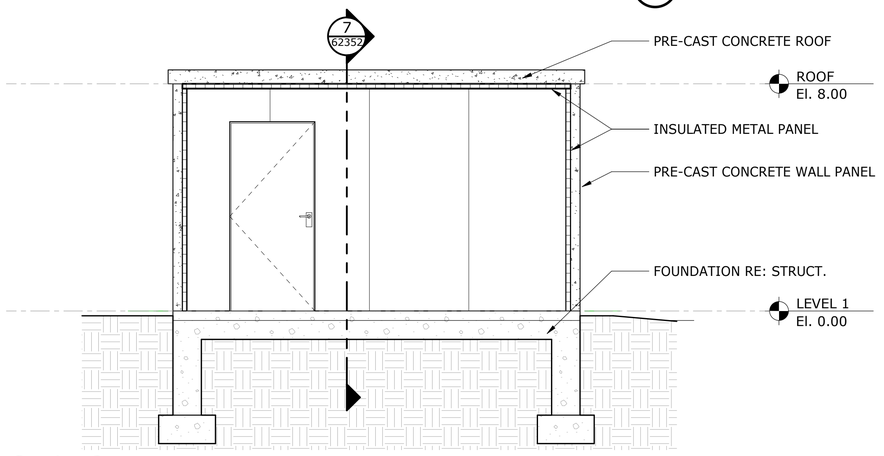

8 Section 2

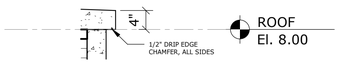

9 EAVE DETAIL

NOTES

0 1' 2' 4'
Scale: 1/2" = 1'-0"

— BUREAU OF — RECLAMATION

ALWAYS THINK **SAFETY**

U.S. DEPARTMENT OF THE INTERIOR
BUREAU OF RECLAMATION
NAVAJO-GALLUP WATER SUPPLY PROJECT
NEW MEXICO

SAN JUAN LATERAL
REACH 21 BOOSTER PLANT

For Official Use Only
Draft
Not For Distribution

B. Barkey
DESIGNED
B. Barkey
DRAWN
CHECKED
TECH. APPR. B. Barkey, R.A.
APPROVED APPROVER, P.E.
Peer Reviewer - PLANT STRUCTURES GROUP
DENVER, CO 2024-04-22

ARCHITECTURAL

PLANS, ELEVATIONS, AND SECTIONS

1695-D-62352

DESIGN PHASE: 90%

DATE AND TIME PLOTTED: 4/26/2022 11:35:14 AM

CAD SYSTEM: Revit 2020

CAD FILENAME: C:\Users\bnbarkey\Documents\Cutter Reach 21 - ARCH_bnbarkeyLISBR.rvt

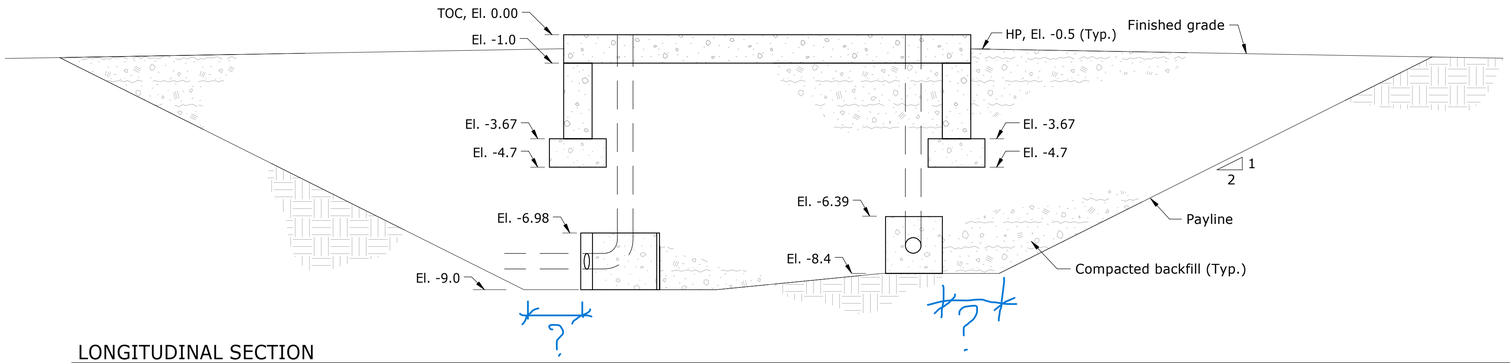

LONGITUDINAL SECTION

Scale: 3/8" = 1'-0"

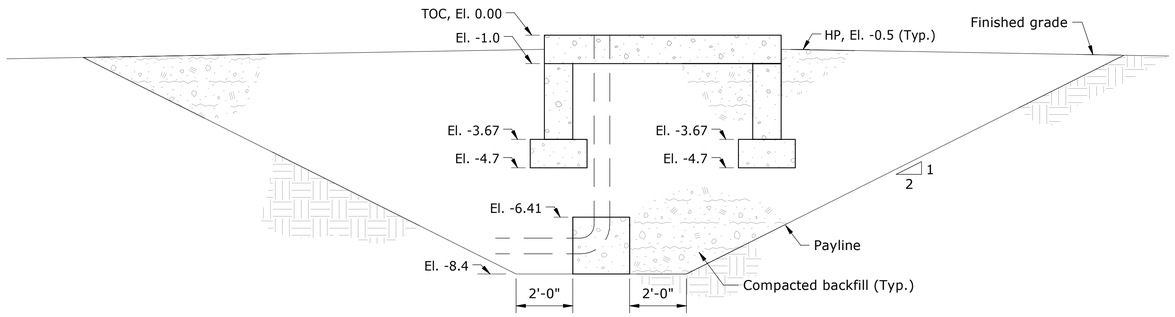

TRANSVERSE SECTION

Scale: 3/8" = 1'-0"

NOTES

1. El. 0.00 corrospondes to El. 6898.25 in the site layout.

0 2' 4' 6'

Scale: 3/8" = 1'-0"

BUREAU OF RECLAMATION

ALWAYS THINK **SAFETY**

U.S. DEPARTMENT OF THE INTERIOR
BUREAU OF RECLAMATION
NAVAJO-GALLUP WATER SUPPLY PROJECT
NEW MEXICO

CUTTER LATERAL - REACH 21
BOOSTER PLANT

For Internal Use Only
Draft
Not For Distribution

Sterling Westfall
DESIGNED
Sterling Westfall
DRAWN
Derek Kosakowski
CHECKED
TECH. APPR. TECH APPROVER, P.E.
APPROVED APPROVER, P.E.
Peer Reviewer - PLANT STRUCTURES GROUP

DENVER, CO 2025-05-19

CIVIL

BOOSTER PLANT
STRUCTURAL
EXCAVATION SECTIONS

1695-D-62358

DESIGN PHASE:
Project Status

DATE AND TIME PLOTTED:
4/30/2025 12:28:52 PM

CAD SYSTEM:
Revit 2020

CAD FILENAME:
C:\Users\swestfall\Documents\Cutter Reach 21 - STRU_swestfall.rvt

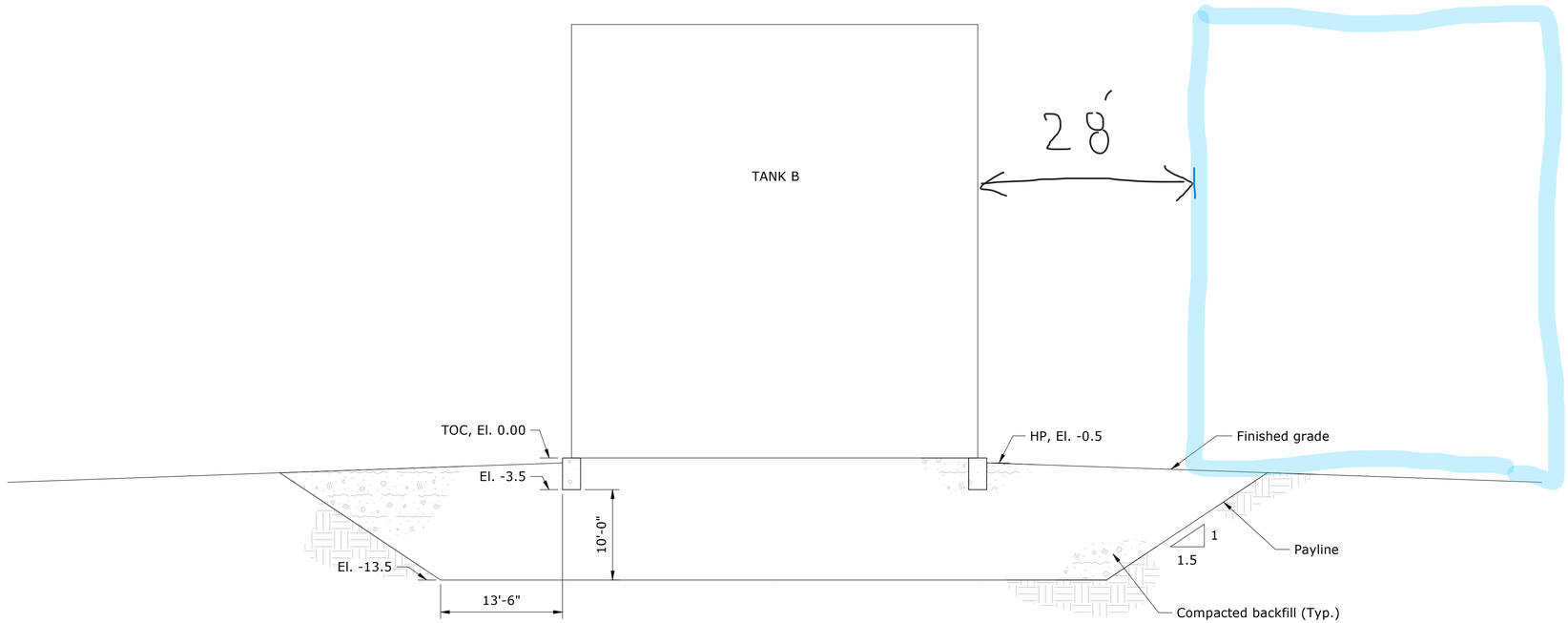

SECTION
Scale: 1/8" = 1'-0"

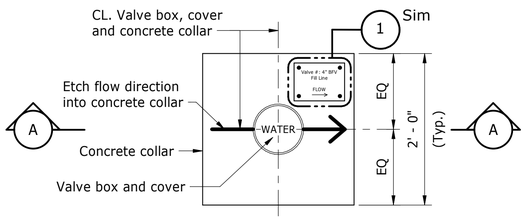

TYPICAL VALVE BOX - PLAN
Scale: 1" = 1'-0"

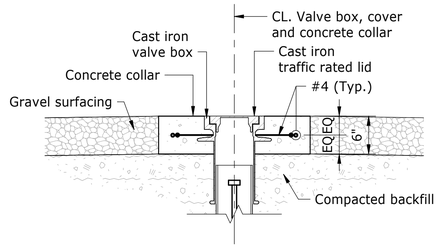

A 62359 TYPICAL VALVE BOX - SECTION
Scale: 1" = 1'-0"

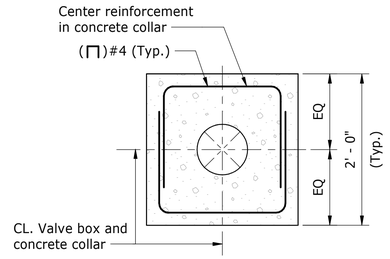

TYPICAL VALVE BOX - SECTIONAL PLAN
Scale: 1" = 1'-0"

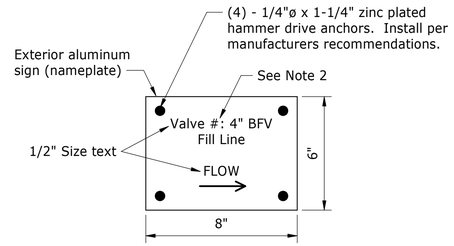

1 62359 DETAIL
Scale: 3" = 1'-0"

NOTES

1. El. 0.00 corrospondes to El. 6968.50 in the site layout.
2. On nameplate, include:
   A. Valve identification number from Piping and Instrumentation Diagram.
   B. Valve size and type (i.e. 4" BFV)
   C. Valve location (i.e. fill line, drain line).

0 4' 8' 16'
Scale: 1/8" = 1'-0"

0 1' 2'
Scale: 1" = 1'-0"

0 3" 6" 9"
Scale: 3" = 1'-0"

BUREAU OF RECLAMATION

ALWAYS THINK **SAFETY**

U.S. DEPARTMENT OF THE INTERIOR
BUREAU OF RECLAMATION
NAVAJO-GALLUP WATER SUPPLY PROJECT
NEW MEXICO

CUTTER LATERAL - REACH 21
BOOSTER PLANT

For Agency Use Only
Draft
Not For Distribution

Sterling Westfall
DESIGNED
Sterling Westfall
DRAWN
Derek Kosakowski
CHECKED
TECH. APPR. TECH APPROVER, P.E.,
APPROVED Approver, Peer Reviewer - PLANT STRUCTURES GROUP
DENVER, CO 2025-05-19

CIVIL

TANK STRUCTURAL EXCAVATION AND VALVE BOX PLANS, SECTIONS, AND DETAIL

1695-D-62359

DESIGN PHASE:
Project Status

DATE AND TIME PLOTTED:
4/30/2025 12:20:52 PM

CAD SYSTEM:
Revit 2020.2

CAD FILENAME:
C:\Users\swestfall\Documents\Cutter Reach 21 - STRU_swestfall.rvt

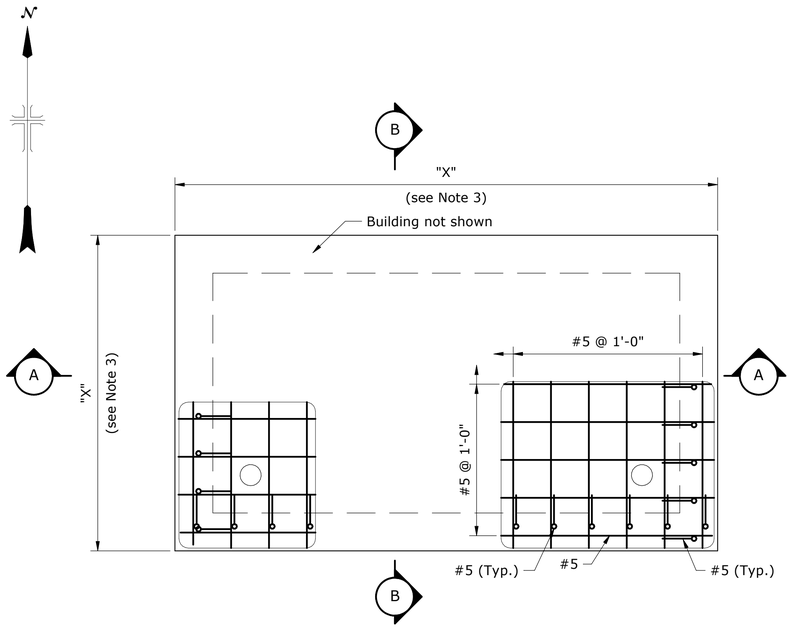

PLAN
Scale: 1/2" = 1'-0"

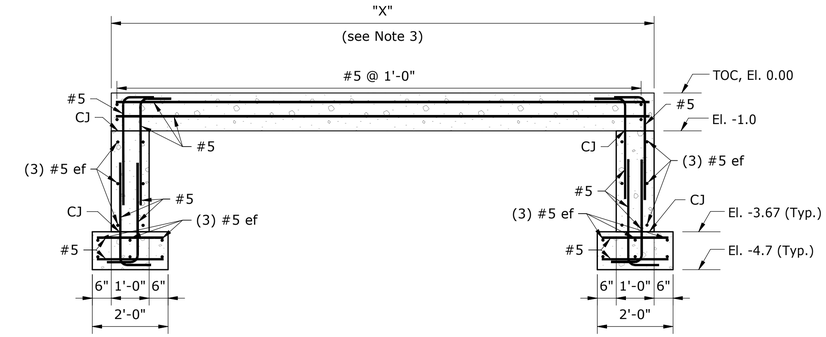

A SECTION
Scale: 1/2" = 1'-0"

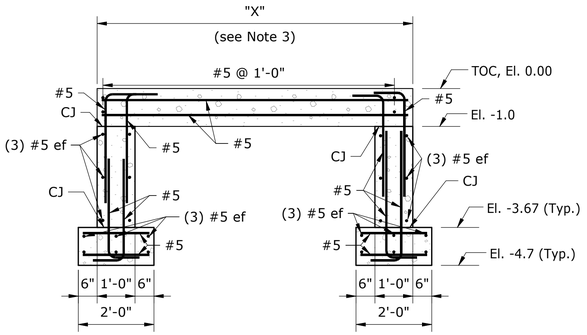

B SECTION
Scale: 1/2" = 1'-0"

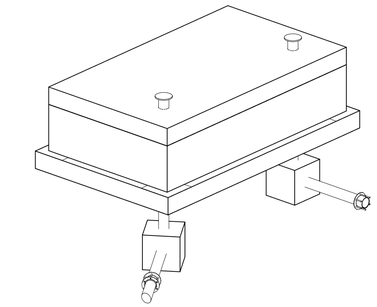

ISOMETRIC VIEW

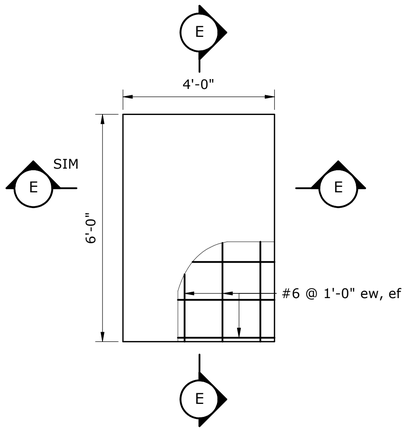

PLAN - ELETRICAL METER PAD
Scale: 1/2" = 1'-0"

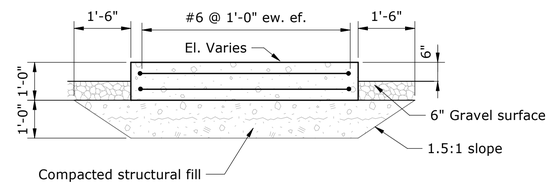

E SECTION
Scale: 1/2" = 1'-0"

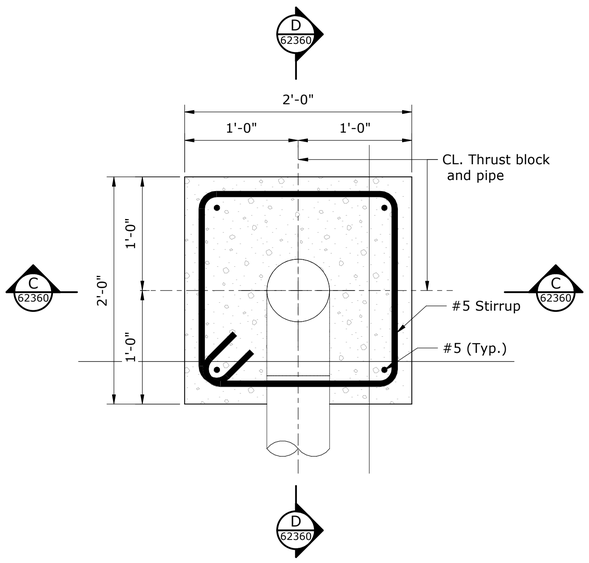

PLAN - THRUST BLOCK
Scale: 1 1/2" = 1'-0"

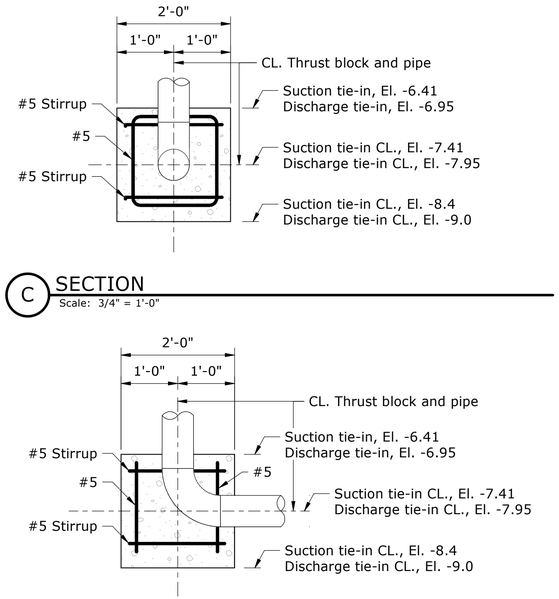

C SECTION
Scale: 3/4" = 1'-0"

D SECTION
Scale: 3/4" = 1'-0"

NOTES

1. For Concrete Outline General Notes and Reinforcement General Notes, see 40-D-60003.
2. For Reinforcement Detailing, see 40-D-60004.
3. Government determines "X" dimension after reciept of approved Contractor-furnished drawings and data for the precast concrete building.
4. El. 0.00 corrospondes to El. 6898.25 in the site layout.

0 1' 2'
Scale: 1" = 1'-0"

0 1' 2' 4'
Scale: 1/2" = 1'-0"

0 1' 2' 3'
Scale: 3/4" = 1'-0"

BUREAU OF RECLAMATION

ALWAYS THINK **SAFETY**

U.S. DEPARTMENT OF THE INTERIOR
BUREAU OF RECLAMATION
NAVAJO-GALLUP WATER SUPPLY PROJECT
NEW MEXICO

CUTTER LATERAL - REACH 21
BOOSTER PLANT

Draft
For Agency Use Only
Not For Distribution

Sterling Westfall	
DESIGNED	
Sterling Westfall	
DRAWN	
Derek Kosakowski	
CHECKED	
TECH. APPR.	TECH APPROVER, P.E.
APPROVED	APPROVER, P.E.
Peer Reviewer - PLANT STRUCTURES GROUP	
DENVER, CO	2025-05-19

STRUCTURAL - FOUNDATION

CONCRETE OUTLINE AND REINFORCEMENT - PLANS AND SECTIONS

1695-D-62360

DESIGN PHASE:
Project Status

DATE AND TIME PLOTTED:
4/30/2025 12:20:53 PM

CAD SYSTEM:
Revit 2020

CAD FILENAME:
C:\Users\swestfall\Documents\Cutter Reach_21 - STRU_sawestfall.rvt

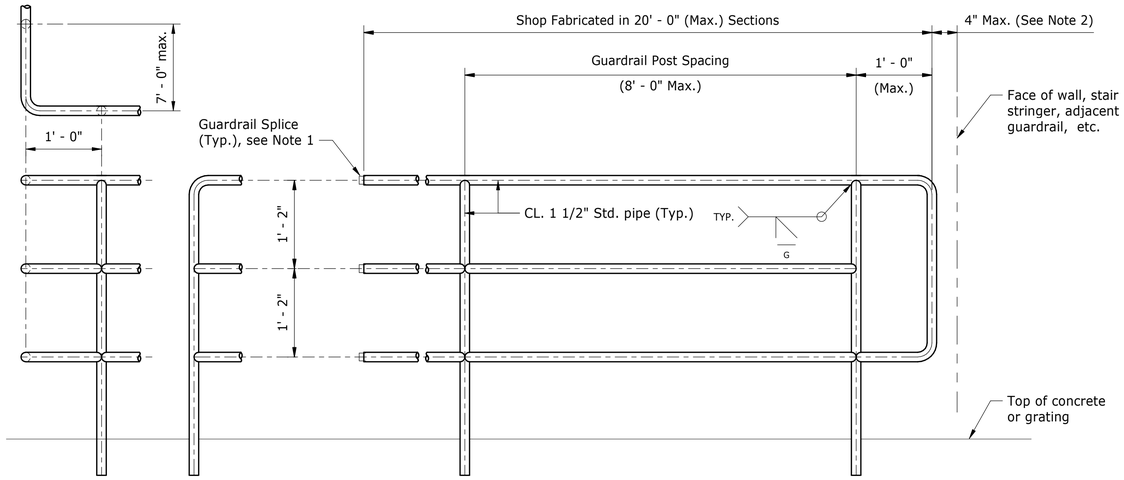

TYPICAL DETAILS - PIPE GUARDRAIL

Scale: 1" = 1'-0"

A 62361

SECTION

Scale: 3" = 1'-0"

POST CONNECTION TO CONCRETE

TYPICAL DETAILS - PIPE GUARDRAIL POST CONNECTION

Scale: 1 1/2" = 1'-0"

MISCELLANEOUS METALWORK GENERAL NOTES

- All material is steel (aluminum) unless noted otherwise.
- Unless noted otherwise, galvanize all material after fabrication, see specifications. Provide vent holes in pipe as required for galvanizing.
- All welds and details are typical for all similar conditions.
- Unless noted otherise, make all welds continuous and in the shop. Start and stop all welds at center of member or tubing.
- Properly backup all CJP welds with bars or weldments and provide full penetration through the material.
- Unless noted otherwise, fabricator shall determine edge preparation and root opening for groove welds. Shop detail drawing shall show edge preparation.
- Arc-Welding Electrodes: filler metal and required shielding gases or fluxes shall be per AWS D1.1 with filler metal for steel having a minimum tensile strength of 70,000 psi.
- Weights shown on drawings are estimated and final weights shall be determined by the Contractor and shown on steel fabrication drawings.
- Grind all guardrail, handrail, wall rail, and ladder welds smooth.
- Details, welds, and other connections shown are typical for all similar conditions.
- Dimensions shown are typical for all similar details.
- Weld headed concrete anchors to steel with automatic end welding equipment.
- Numerals in parenthesis following section or detail letters indicate drawing numbers on which section or detail is shown.
- Unless noted otherwise, objects are measure from centerline or as noted below:

Concrete	Surface
Channel/C Shape	Outside Web Surface
Angle/L Shape	Outside Surface
Grating	Outside Edge

- Unless noted otherwise, use preferred ASTM Specifications for structural steel shapes, listed in AISC.

NOTES

1. Splice guardrails as required with splice locks. Provide splice lock suitable for expansion joint at 50± foot centers maximum. Allow 4" max. between guardrails.
2. Place centerline guardrails 6 inches from open edge of concrete unless otherwise noted.
3. Contractor determines guardrail lengths based on dimensions of structures. See this drawing and site plan drawings for location and extend of guardrails.
4. Grind all guardrail (handrail) welds smooth.
5. CL. 13/16" dia. hole in plate or angle for 5/8" dia. expansion anchor.

0 1/2' 1' 1 1/2'
Scale: 1 1/2" = 1'-0"

0 1' 2'
Scale: 1" = 1'-0"

0 3" 6" 9"
Scale: 3" = 1'-0"

BUREAU OF RECLAMATION

ALWAYS THINK **SAFETY**

U.S. DEPARTMENT OF THE INTERIOR
BUREAU OF RECLAMATION
NAVAJO-GALLUP WATER SUPPLY PROJECT
NEW MEXICO

CUTTER LATERAL - REACH 21
BOOSTER PLANT

Sterling Westfall
DESIGNED
Sterling Westfall
DRAWN
Derek Kosakowski
CHECKED
TECH. APPR. TECH APPROVER, P.E.,
APPROVED APPROVER, P.E.,
Peer Reviewer - PLANT STRUCTURES GROUP

DENVER, CO 2025-05-19

MISCELLANEOUS METALWORK

GUARDRAIL SECTION AND DETAILS

1695-D-62361

Draft
For Limited Use Only
Not For Distribution

DESIGN PHASE: Project Status

DATE AND TIME PLOTTED: 4/30/2025 12:20:53 PM

CAD SYSTEM: Revit 2020.2

CAD FILENAME: C:\Users\swestfall\Documents\Cutter Reach 21 - STRU_sawestfall.rvt

NOTES:

1. For concrete reinforcing and detailing, see 40-D-60004 and 40-D-60003.
2. For wall location northing and easting coordinates, see (62343).

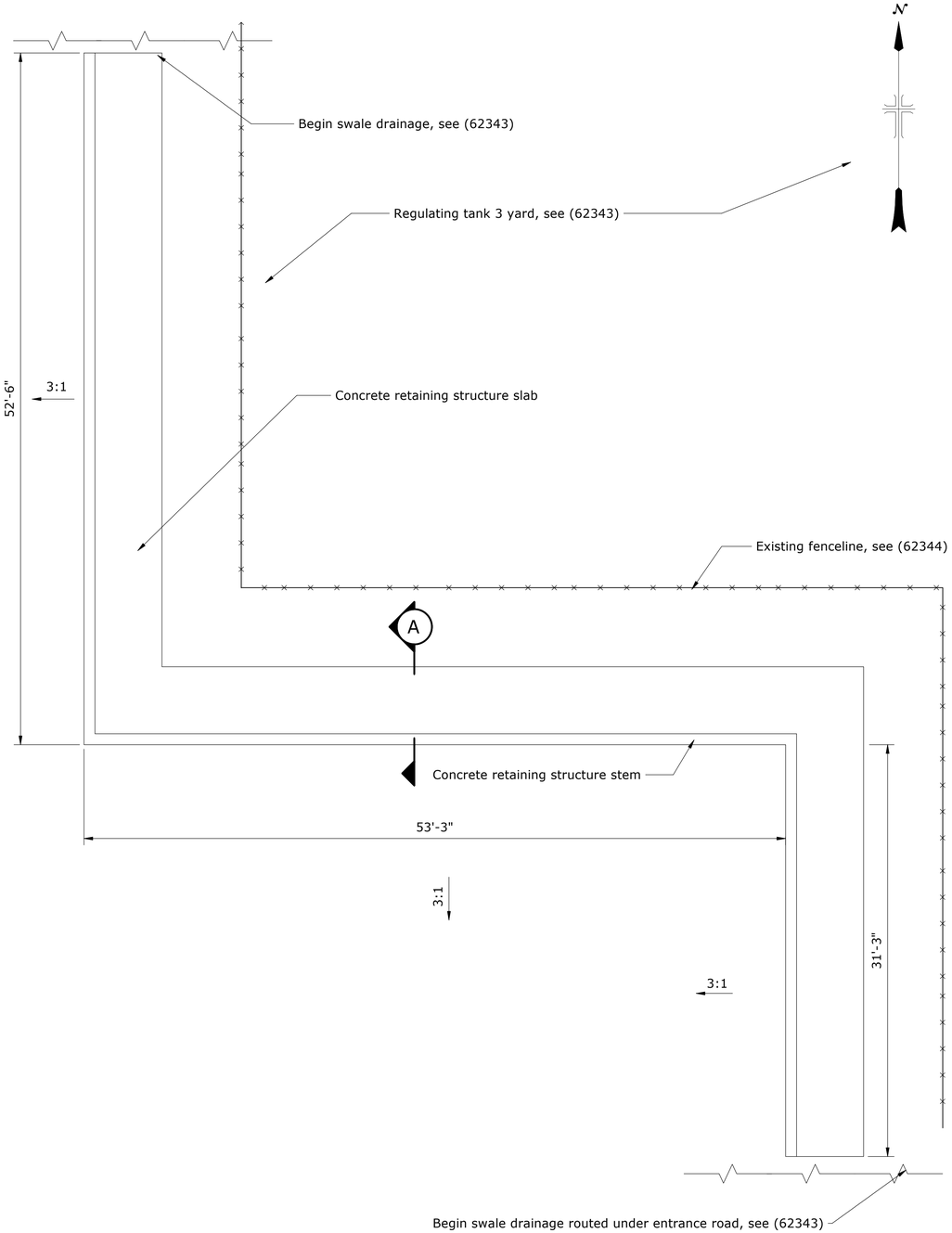

PLAN

0 5' 10'
Scale: 3/16" = 1'-0"

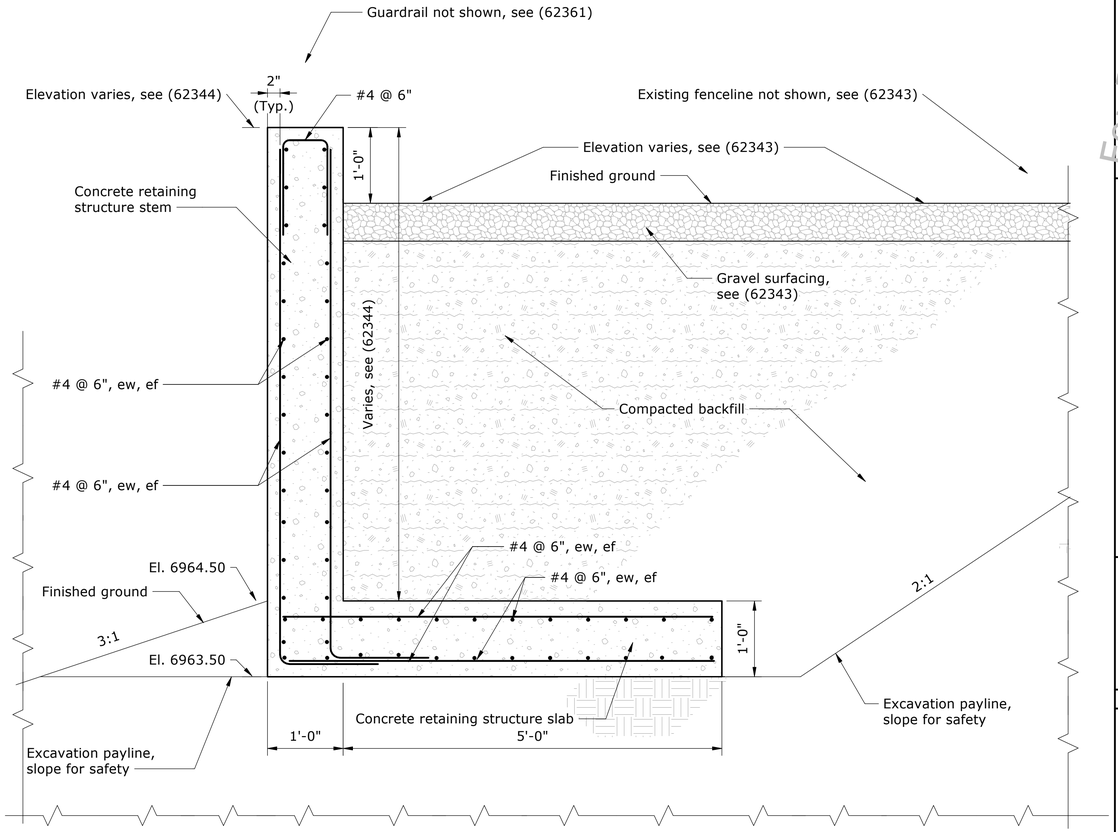

A TYPICAL SECTION

0 1' 2'
Scale: 1" = 1'-0"

BUREAU OF RECLAMATION

ALWAYS THINK SAFETY

U.S. DEPARTMENT OF THE INTERIOR
BUREAU OF RECLAMATION
NAVAJO-GALLUP WATER SUPPLY PROJECT
NEW MEXICO

SAN JUAN LATERAL

REGULATING TANK 3

For Internal Use Only
Draft
Not For Distribution

K. HEWETT
DESIGNED
K. HEWETT
DRAWN
E. KANOPKIN
CHECKED
TECH. APPR. KYRA HEWETT, P.E.
APPROVED Nicholas Clough, P.E.
Peer Reviewer - CIVIL STRUCTURES GROUP

DENVER, CO 2025-05-19

RETAINING STRUCTURE - CONCRETE OUTLINE & REINFORCING DETAILS

PLAN AND SECTION

1695-D-62362

SHEET 2 OF 2

DESIGN PHASE: Project Status

DATE AND TIME PLOTTED: 5/27/2025 1:51:38 PM

CAD SYSTEM: Revit 2020

CAD FILENAME: T:\Jobs\UC_Nonfeature\Navajo-Gallup Water Supply\2022-PDC-Cutter Lateral Reach 21 Booster Plant\FIN\DWG\8150\REVIT\Reg Tank 3 Retaining Wall with Grading.rvt

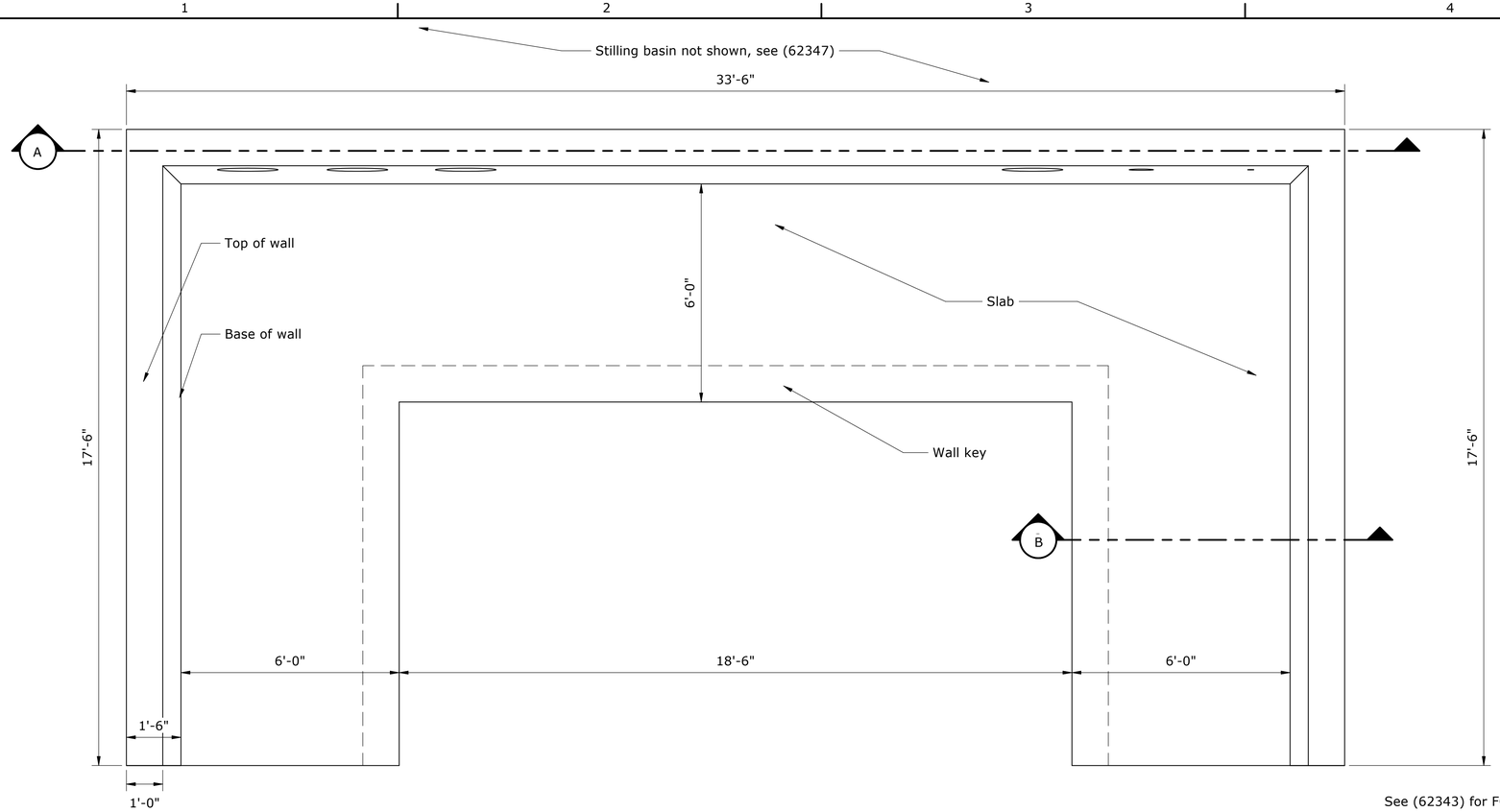

PLAN

Scale: 1/2" = 1'-0"

NOTES:

1. For orifice reinforcement, concrete reinforcing and detailing, see 40-D-60004 and 40-D-60003.
2. For wall location northing and easting coordinates, see (62347).
3. Field verify existing pipe invert elevations before placing and forming pipe support retaining wall.

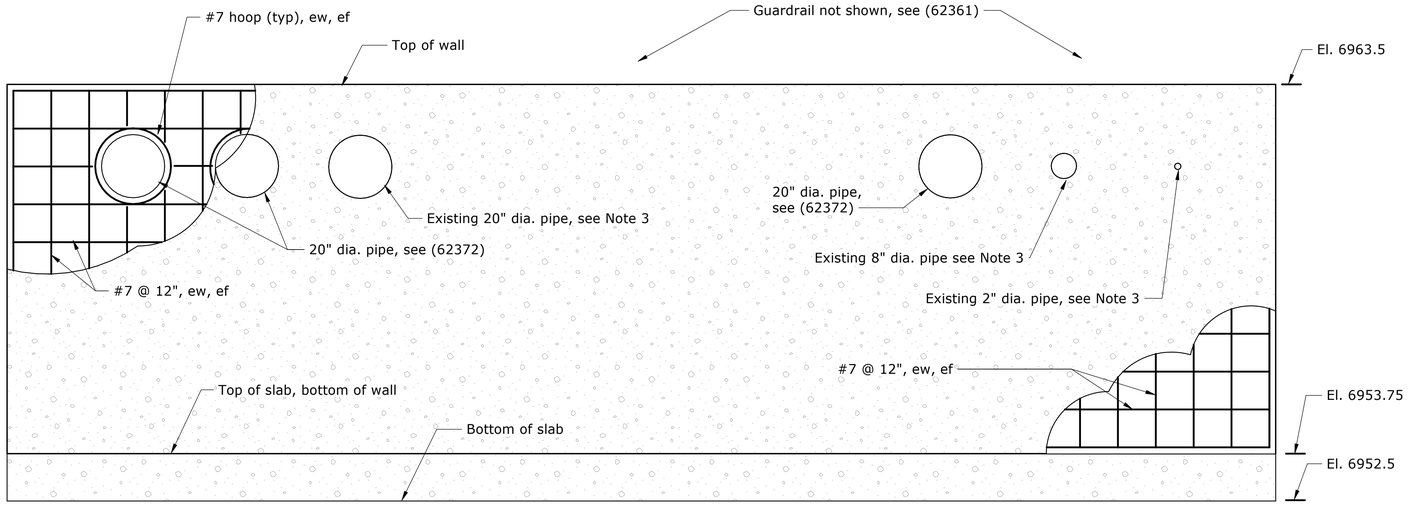

A SECTION

Scale: 1/2" = 1'-0"

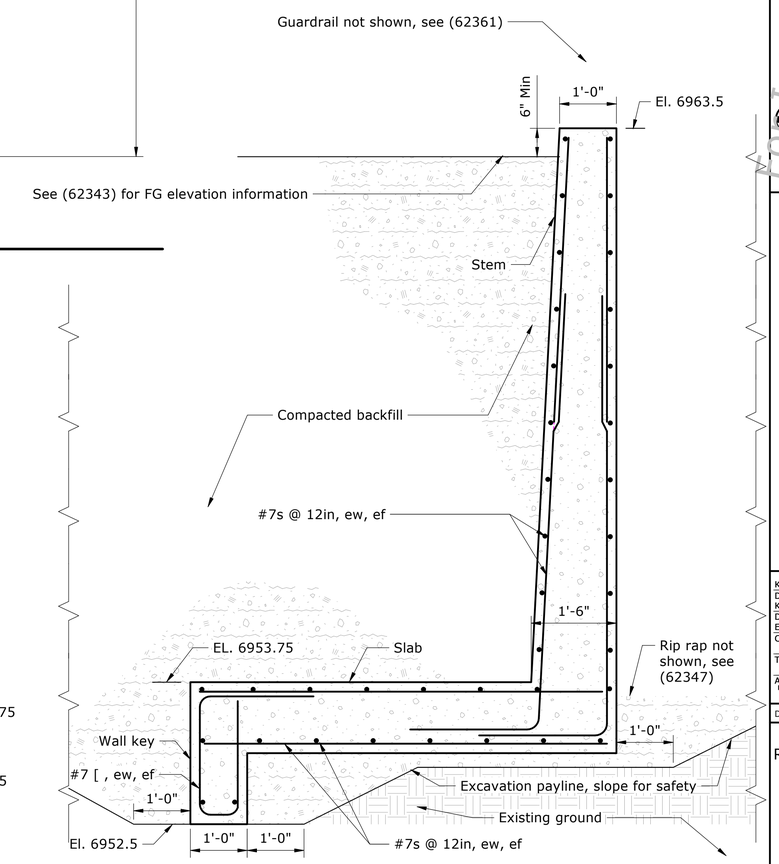

B SECTION

Scale: 3/4" = 1'-0"

BUREAU OF RECLAMATION

ALWAYS THINK SAFETY

U.S. DEPARTMENT OF THE INTERIOR
BUREAU OF RECLAMATION
NAVAJO-GALLUP WATER SUPPLY PROJECT
NEW MEXICO

SAN JUAN LATERAL

REGULATING TANK 3

For Internal Use Only
Draft
Not For Distribution

K. HEWETT
DESIGNED
K. HEWETT
DRAWN
E. KANOPKIN
CHECKED
TECH. APPR. KYRA HEWETT, P.E.
APPROVED Nicholas Clough, P.E.
Peer Reviewer - CIVIL STRUCTURES GROUP

DENVER, CO 2025-05-19

PIPE SUPPORT RETAINING STRUCTURE - CONCRETE OUTLINE & REINFORCING DETAILS

PLAN AND SECTIONS

1695-D-62363

SHEET 2 OF 2

DESIGN PHASE: Project Status

DATE AND TIME PLOTTED: 5/27/2025 1:50:58 PM

CAD SYSTEM: Revit 2020

CAD FILENAME: T:\Jobs\UC_Nonfeature\Navajo-Gallup Water Supply\2022-PDC-Cutter Lateral Reach 21 Booster Plant\FIN\DWG\8150\REVIT\Reg Tank 3 Pipe Support Wall 30FT.rvt

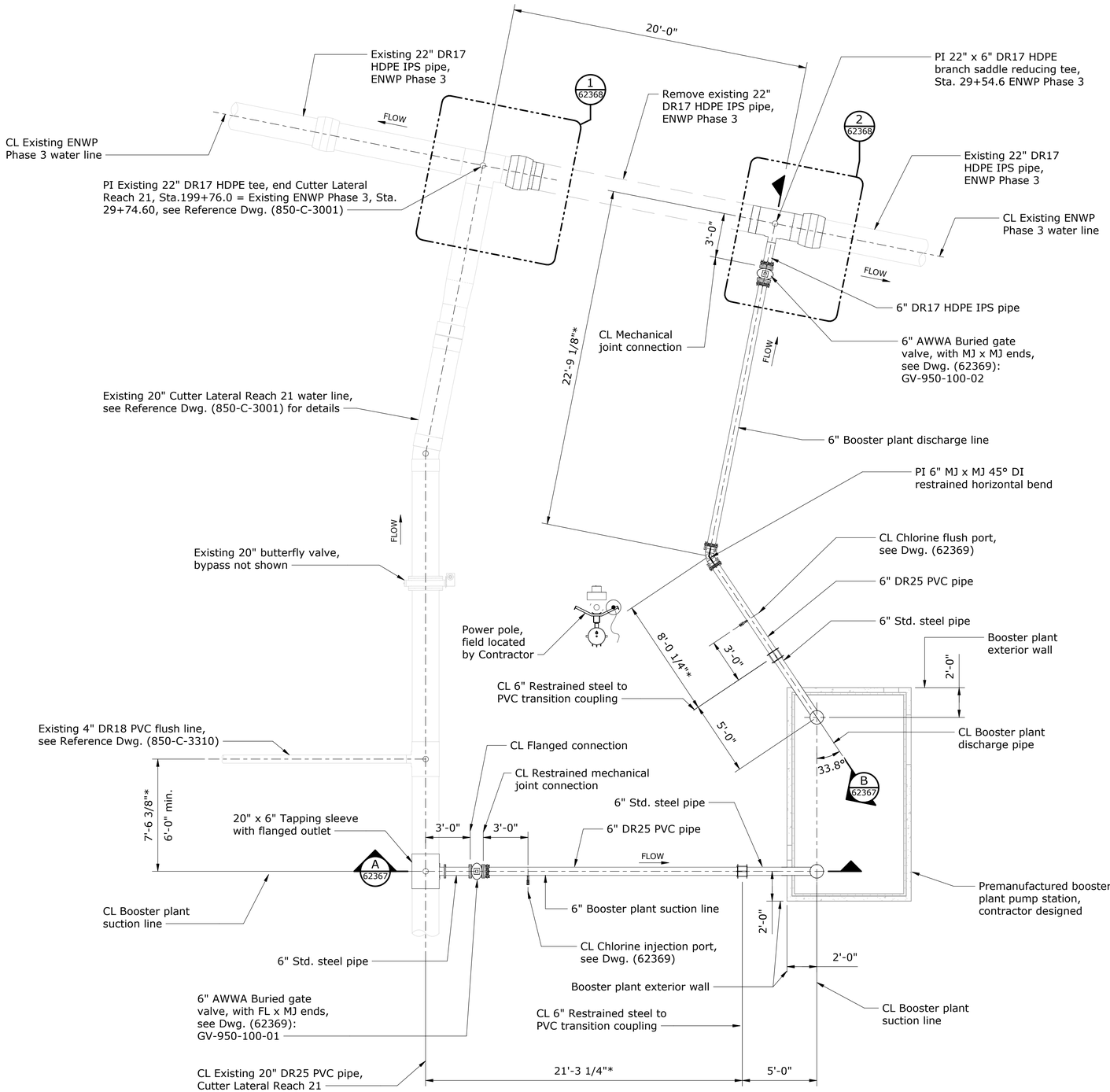

PLAN

0 2' 4' 8'

Scale: 1/4" = 1'-0"

N

REFERENCE DRAWINGS

REACH 21 PIPELINE (SHEET 369 OF 405)----------850-C-3001
REACH 21 PIPELINE (SHEET 380 OF 405)----------850-C-3310

GENERAL NOTES

1. Provide nuts, bolts, and gaskets suitable for cold water service.
2. All flanges shall be AWWA Class D as shown on the drawings, or as noted otherwise.
3. All elbows shall be long radius unless otherwise noted.
4. At locations where fittings have a greater wall thickness than steel piping, machine to match lighter pipe wall and taper excess thickness internally to form transition zone.
5. Existing conditions to be field verified by Contractor.
6. Welding symbols apply to the joints of all members of similar identification.
7. All fillet welds shall be returned.
8. Dimensions and elevations marked with an asterisk (*) to be field verified.
9. All installed pipe shall be fully restrained.
10. Additional fittings, flanges, or welded joints added by the contractor to facilitate installation of the piping are subject to Government approval.
11. Booster plant design is conceptual. Contractor to determine building size and equipment following requirements in specifications.
12. Pipe inlet and outlet locations to booster plant are conceptual. Contractor to determine building penetration locations.
13. Location of existing Reach 21 and ENWP Phase 3 piping is approximate.
14. Hydrostatic test pressure for the new steel pipe shall be 150 psig.
15. All metal piping shall have a minimum wall thickness = 1/4" unless otherwise shown.
16. Factory-made wrought buttwelding fittings end preparation: Straight bore followed by a 30-degree slope or a taper bore at maximum slope of 1 to 4 for a minimum of 2 times the pipe minimum wall.

BUREAU OF RECLAMATION

ALWAYS THINK **SAFETY**

U.S. DEPARTMENT OF THE INTERIOR
BUREAU OF RECLAMATION
1695, NAVAJO-GALLUP WATER SUPPLY PROJECT, NM
NEW MEXICO

CUTTER LATERAL - REACH 21
BOOSTER PLANT

For Official Use Only
Draft
Not For Distribution

KYLE TAYLOR	
DESIGNED	
KYLE TAYLOR	
DRAWN	
RICHARD FRISZ	
CHECKED	
BRANT BACA, P.E.	
TECH. APPR.	BRANT BACA, P.E.
APPROVED	
Peer Reviewer - Manager	
DENVER, CO	5/18/2025

REACH 21 BOOSTER PLANT

PLAN

1695-D-62366
Sheet 1

DESIGN PHASE:
Project Status

DATE AND TIME PLOTTED:
5/12/2025 9:03:55 AM

CAD SYSTEM:
Revit 2020

CAD FILENAME:
C:\Users\kaylor\Documents\Cutter Reach 21 Booster Station - MEP Central_ktaylor375.rvt

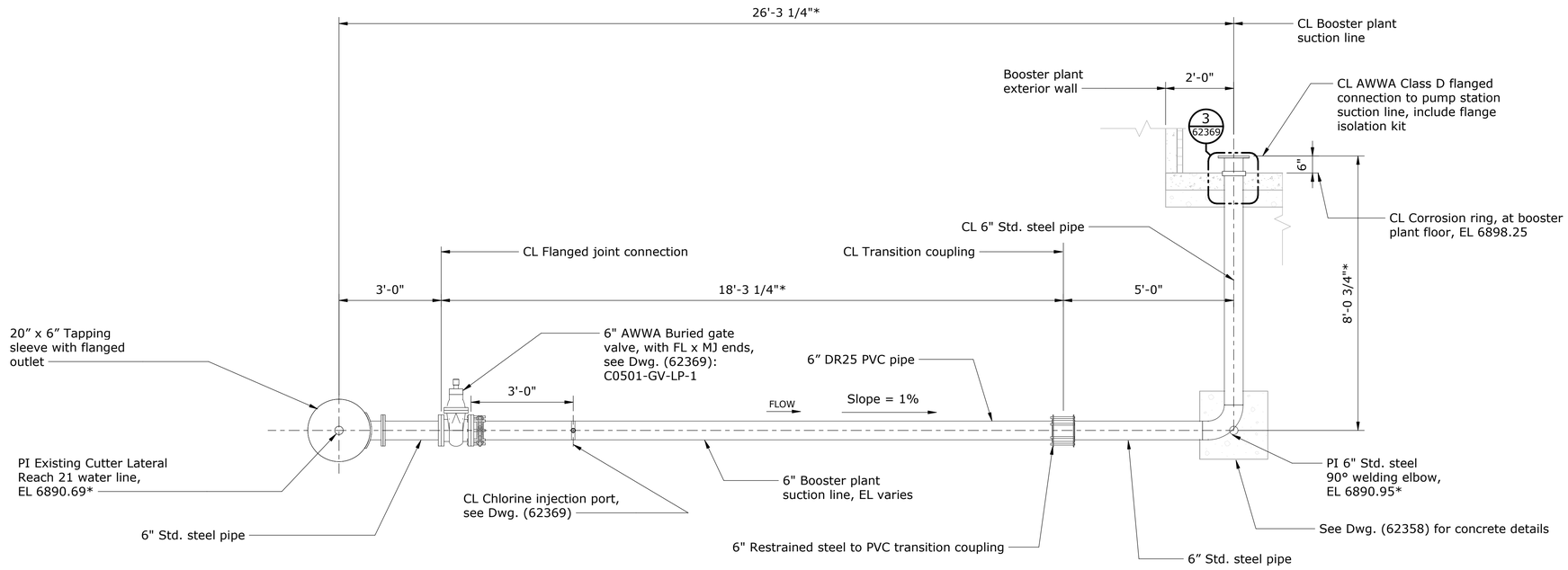

A 62366 SECTION

Scale: 1/2" = 1'-0"

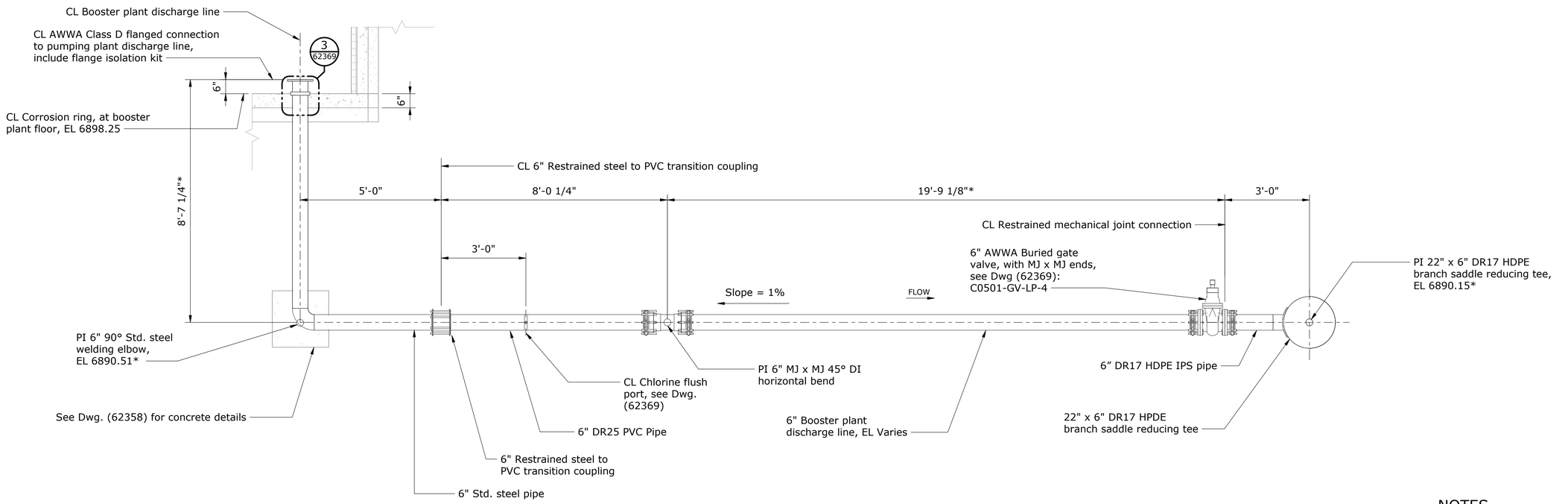

B 62366 SECTION

Scale: 1/2" = 1'-0"

NOTES

1. See General Notes on Dwg. (62366).
2. Booster plant design is conceptual. Contractor to determine building size and equipment.
3. Dimensions marked with an asterisk (*) to be field verified.
4. Slope pipes up towards booster plant (min. 1%).

BUREAU OF RECLAMATION

ALWAYS THINK **SAFETY**

U.S. DEPARTMENT OF THE INTERIOR
BUREAU OF RECLAMATION
1695, NAVAJO-GALLUP WATER SUPPLY PROJECT, NM
NEW MEXICO

CUTTER LATERAL - REACH 21 BOOSTER PLANT

For Limited Use Only
Draft
Not For Distribution

KYLE TAYLOR	DESIGNED
KYLE TAYLOR	DRAWN
RICHARD FRISZ	CHECKED
BRANT BACA, P.E.	TECH. APPR. BRANT BACA, P.E.
	APPROVED Peer Reviewer - Manager
DENVER, CO	5/18/2025

REACH 21 BOOSTER PLANT

SECTIONS

1695-D-62367
Sheet 2

DESIGN PHASE: Project Status

DATE AND TIME PLOTTED: 5/23/2025 9:02:49 AM

CAD SYSTEM: Revit 2020

CAD FILENAME: C:\Users\ktaylor\Documents\Cutter Reach 21 Booster Station - MEP Central_ktaylor375.rvt

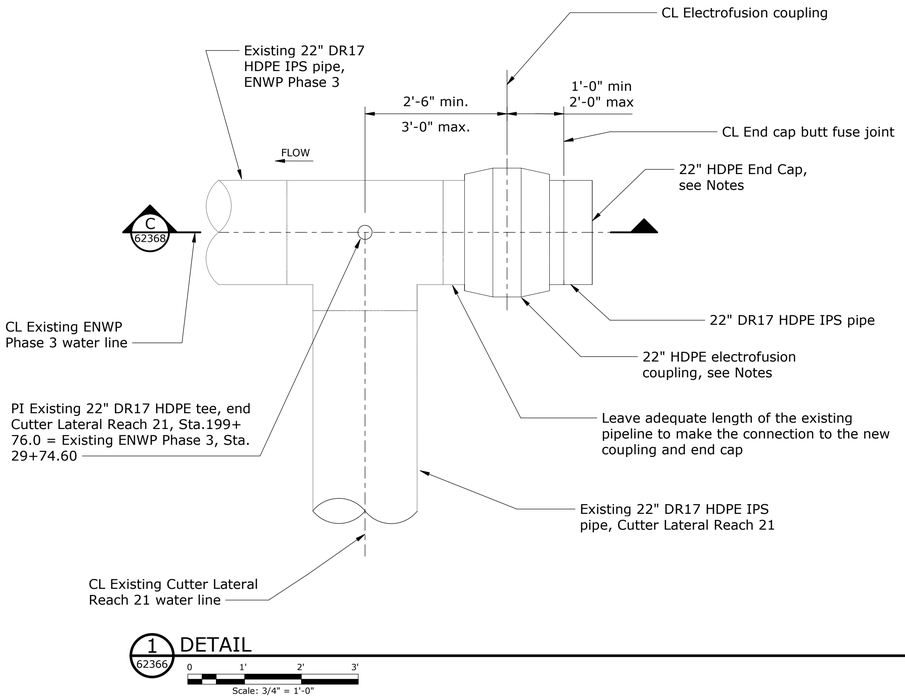

1 62366 DETAIL

Scale: 3/4" = 1'-0"

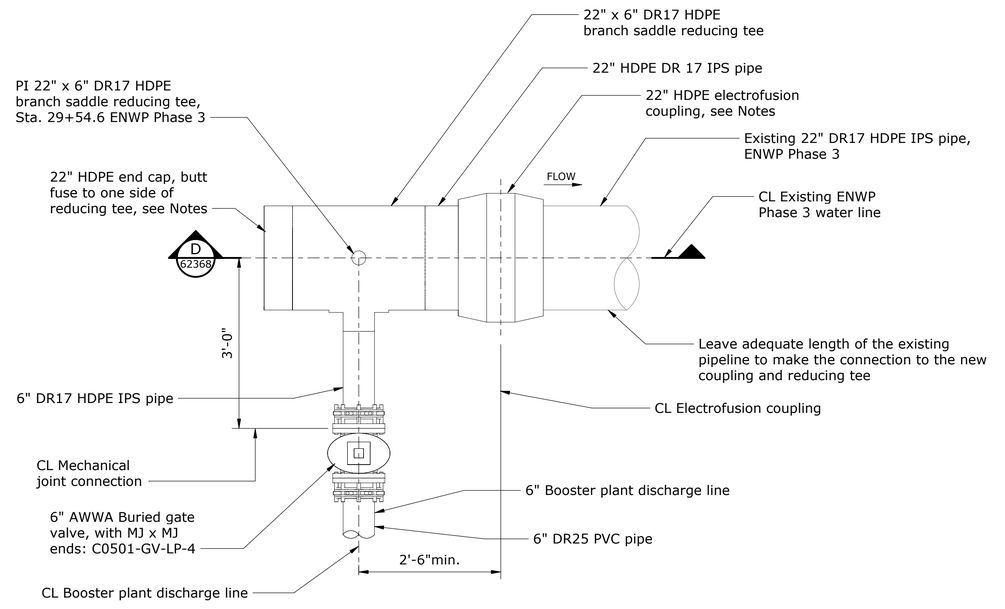

2 62366 DETAIL

Scale: 3/4" = 1'-0"

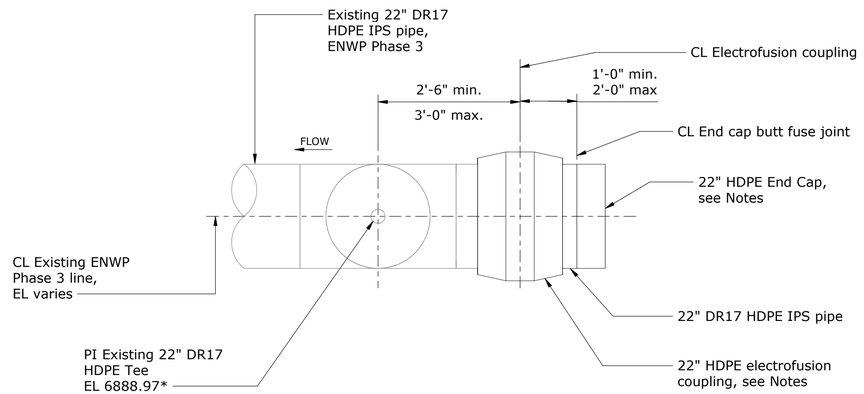

C SECTION

Scale: 3/4" = 1'-0"

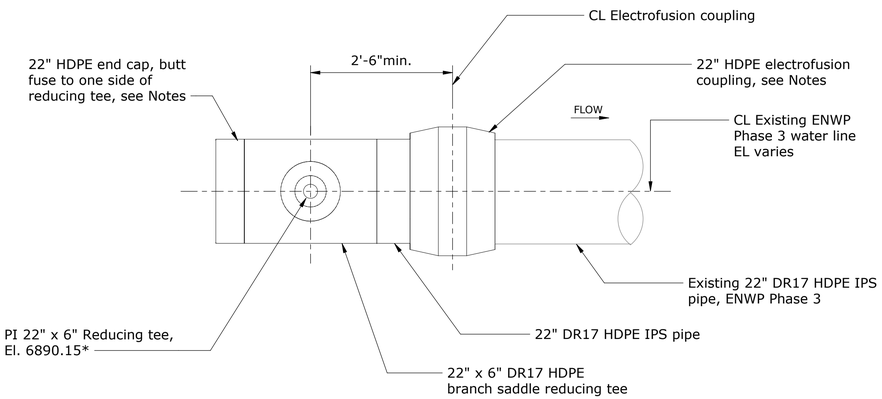

D SECTION

Scale: 3/4" = 1'-0"

NOTES

1. See General Notes on Dwg. (62366).
2. HDPE Flange Adapter with AWWA Class SD stainless steel blind flange and stainless steel backing ring rated to at least 150 psi may be used in place of HDPE end cap.
3. Limited access in-situ butt fusion may be used in place of electrofusion couplings.

BUREAU OF RECLAMATION

ALWAYS THINK **SAFETY**

U.S. DEPARTMENT OF THE INTERIOR
BUREAU OF RECLAMATION
1695, NAVAJO-GALLUP WATER SUPPLY PROJECT, NM
NEW MEXICO

CUTTER LATERAL - REACH 21 BOOSTER PLANT

For Planning Use Only
Draft
Not For Distribution

KYLE TAYLOR	
DESIGNED	KYLE TAYLOR
DRAWN	RICHARD FRISZ
CHECKED	BRANT BACA, P.E.
TECH. APPR.	BRANT BACA, P.E.
APPROVED	Peer Reviewer - Manager
DENVER, CO	5/18/2025

REACH 21 BOOSTER PLANT

DETAIL AND SECTIONS

1695-D-62368
Sheet 3

DESIGN PHASE:
Project Status

DATE AND TIME PLOTTED:
5/21/2025 9:02:55 AM

CAD SYSTEM:
Revit 2020

CAD FILENAME:
C:\Users\kaylo\Documents\Cutter Reach 21 Booster Station - MEP Central_ktaylor375.rvt

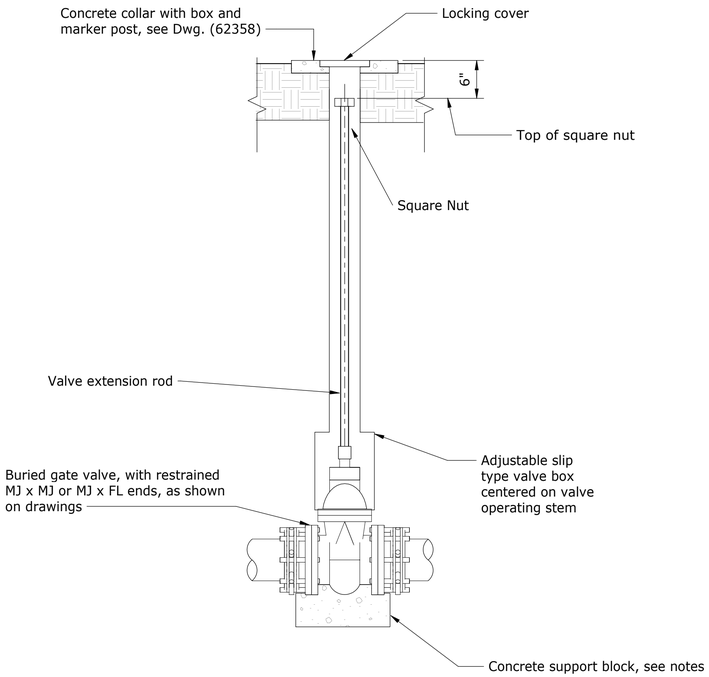

BURIED GATE VALVE DETAIL

(NOT TO SCALE) (62366, 62367)

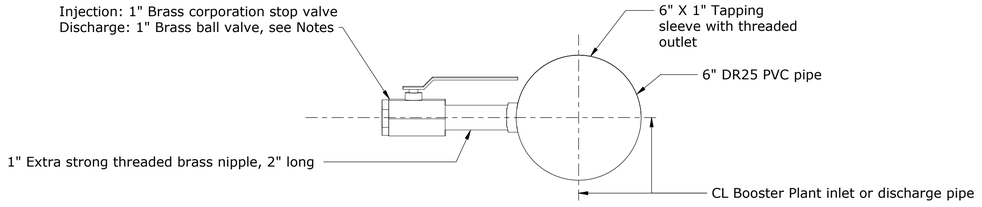

CHLORINE INJECTION AND FLUSHING DETAIL

0 3" 6" 9"
Scale: 3" = 1'-0"

(62366, 62367)

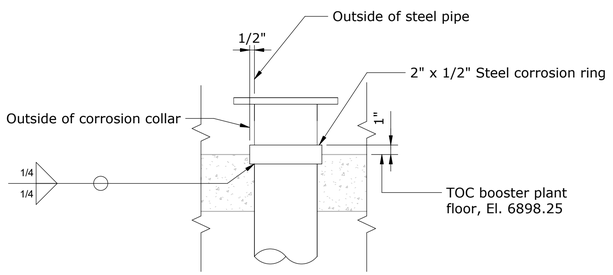

3 DETAIL

62367

0 1/2' 1' 1 1/2'
Scale: 1 1/2" = 1'-0"

(62367)

NOTES

1. See General Notes on Dwg. (62366).
2. Concrete block for buried gate valves are Contractor designed.
3. After the chlorine fluhsing procedure is completed, see specifcitions, remove ball valve or corporation stop valve and 1" piping and insert threaded plug into the saddle outlet

BUREAU OF RECLAMATION

ALWAYS THINK SAFETY

U.S. DEPARTMENT OF THE INTERIOR
BUREAU OF RECLAMATION
1695, NAVAJO-GALLUP WATER SUPPLY PROJECT, NM
NEW MEXICO

CUTTER LATERAL - REACH 21

BOOSTER PLANT

KYLE TAYLOR
DESIGNED
KYLE TAYLOR
DRAWN
RICHARD FRISZ
CHECKED
BRANT BACA, P.E.
TECH. APPR. BRANT BACA, P.E.
APPROVED
Peer Reviewer - Manager

DENVER, CO 5/18/2025

REACH 21 BOOSTER PLANT

DETAILS

1695-D-62369
Sheet 4

For Internal Use Only
Draft
Not For Distribution

DESIGN PHASE: Project Status

DATE AND TIME PLOTTED: 5/23/2025 9:03:03 AM

CAD SYSTEM: Revit 2020

CAD FILENAME: C:\Users\ktaylor\Documents\Cutter Reach 21 Booster Station - MEP Central_ktaylor375.rvt

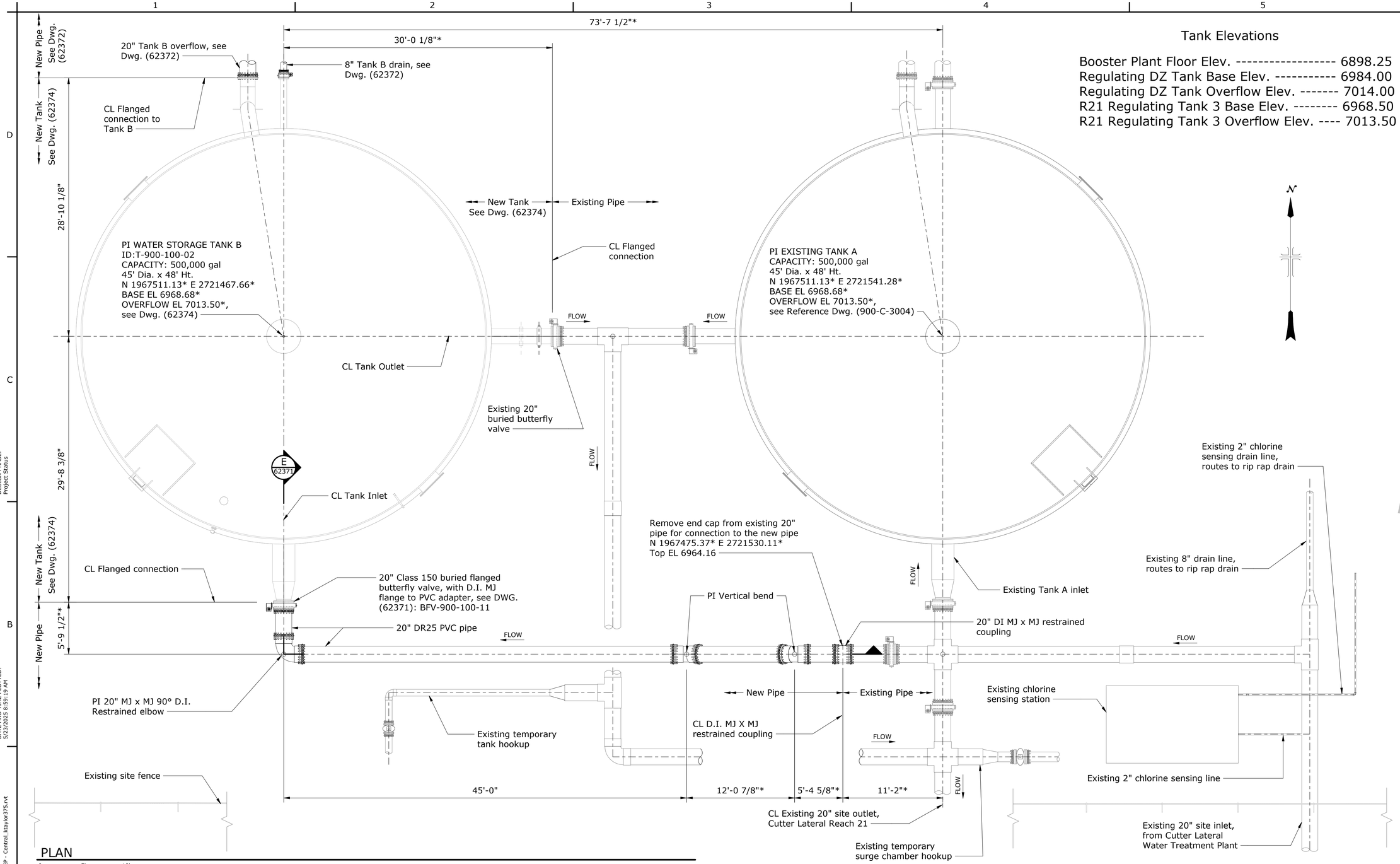

PLAN

0 5' 10'

Scale: 3/16" = 1'-0"

Tank Elevations

Booster Plant Floor Elev. ---------- 6898.25
Regulating DZ Tank Base Elev. ---------- 6984.00
Regulating DZ Tank Overflow Elev. ------- 7014.00
R21 Regulating Tank 3 Base Elev. -------- 6968.50
R21 Regulating Tank 3 Overflow Elev. ---- 7013.50

REFERENCE DRAWINGS

REACH 21 PIPELINE (SHEET 391 OF 405)----------900-C-3003
REACH 21 PIPELINE (SHEET 392 OF 405)----------900-C-3004
REACH 21 PIPELINE (SHEET 393 OF 405)----------900-C-3301
REACH 21 PIPELINE (SHEET 394 OF 405)----------900-C-3302
TANK 3 SUPPORT FACILITY (SHEET 404 OF 405)------900-I-0001

GENERAL NOTES

1. Provide nuts, bolts, and gaskets suitable for cold water service.
2. All flanges shall be AWWA Class D as shown on the drawings, or as noted otherwise.
3. All elbows shall be long radius unless otherwise noted.
4. At locations where fittings have a greater wall thickness than steel piping, machine to match ligher pipe wall and taper excess thickness internally to form transition zone.
5. Existing conditions to be field verified by Contractor.
6. Welding symbols apply to the joints of all members of similar identification.
7. All fillet welds shall be returned.
8. Dimensions and elevations marked with an asterisk (*) to be field verified.
9. All installed pipe shall be fully restrained.
10. Additional fittings, flanges, or welded joints added by the contractor to facilitate installation of the piping are subject to Government approval.
11. Contractor shall field survey elevation of overflow of Tank B and ensure overflow weir elevation matches Tank A and ENWP Phase 3 DZ Regulating (SE) Tank overflow elevation (within a tolerance of ±1/2" inch).
12. No high spots permitted on site piping. All site piping (including sensor lines) shall slope up towards tanks (Min. 1%).

BUREAU OF RECLAMATION

ALWAYS THINK **SAFETY**

U.S. DEPARTMENT OF THE INTERIOR
BUREAU OF RECLAMATION
1695, NAVAJO-GALLUP WATER SUPPLY PROJECT, NM
NEW MEXICO

CUTTER LATERAL - REACH 21
REGULATING TANK 3B

Draft
For Internal Use Only
Not For Distribution

KYLE TAYLOR	
DESIGNED	
KYLE TAYLOR	
DRAWN	
RICHARD FRISZ	
CHECKED	
BRANT BACA, P.E.	
TECH. APPR.	BRANT BACA, P.E.
Approver	
APPROVED	Approver
DENVER, CO	5/18/2025

REGULATING TANK #3

PLAN

1695-D-62370
Sheet 1

DESIGN PHASE: Project Status

DATE AND TIME PLOTTED: 5/21/2025 8:59:19 AM

CAD SYSTEM: Revit 2020

CAD FILENAME: C:\Users\KTaylor\Documents\Reg Tank 3B - MEP - Central_ktaylor375.rvt

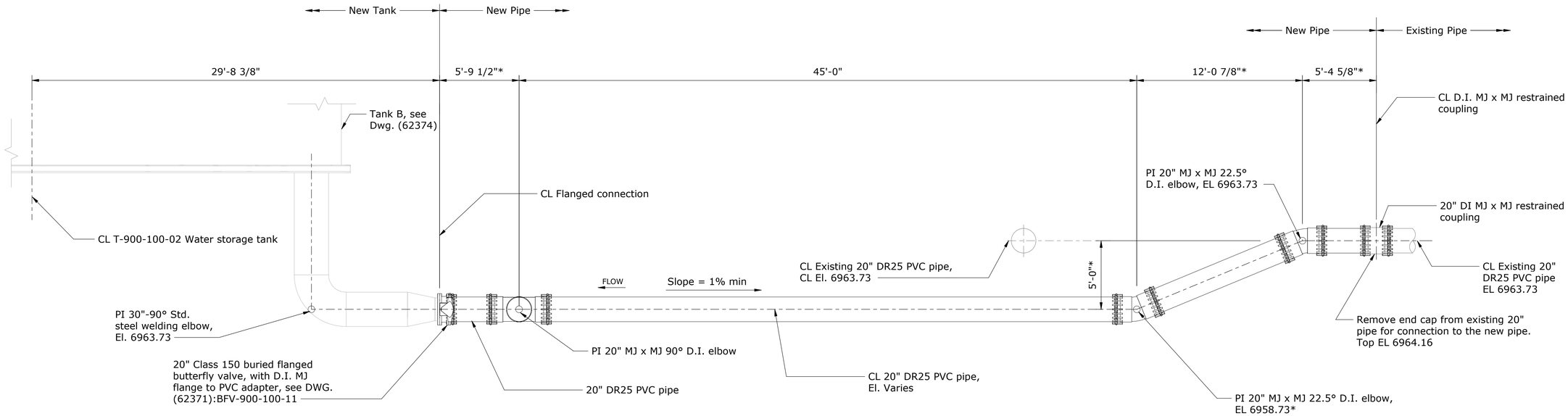

E 62370 SECTION

0 2' 4' 8'

Scale: 1/4" = 1'-0"

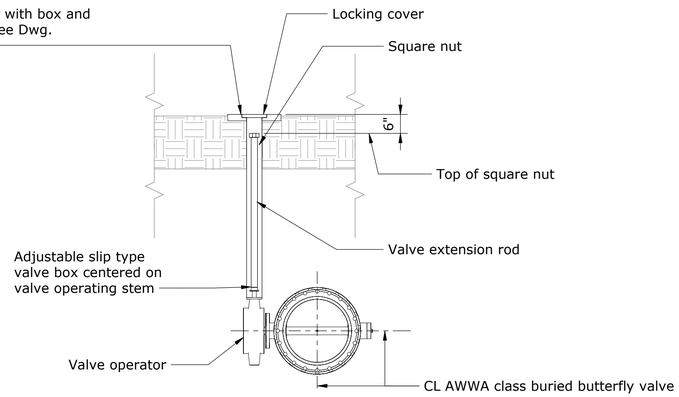

BURIED BUTTERFLY VALVE ACTUATOR

(NOT TO SCALE) (62370, 62371, 62372)

NOTES

1. See General Notes on Dwg. (62370).
2. Existing conditions to be field verified by Contractor.
3. Dimensions marked with an asterisk (*) to be field verified.

BUREAU OF RECLAMATION

ALWAYS THINK **SAFETY**

U.S. DEPARTMENT OF THE INTERIOR
BUREAU OF RECLAMATION
1695, NAVAJO-GALLUP WATER SUPPLY PROJECT, NM
NEW MEXICO

CUTTER LATERAL - REACH 21

REGULATING TANK 3B

For Limited Use Only
Draft
Not For Distribution

KYLE TAYLOR	
DESIGNED	
KYLE TAYLOR	
DRAWN	
RICHARD FRISZ	
CHECKED	
BRANT BACA, P.E.	
TECH. APPR.	BRANT BACA, P.E.
Approver	
APPROVED	Approver
DENVER, CO	5/18/2025

REGULATING TANK #3

SECTION AND DETAIL

1695-D-62371

Sheet 2

DESIGN PHASE:
Project Status

DATE AND TIME PLOTTED:
5/21/2025 8:59:28 AM

CAD SYSTEM:
Revit 2020

CAD FILENAME:
C:\Users\kteylor\Documents\Reg Tank 3B - MEP - Central_ktaylor375.rvt

NOTES

1. See General Notes on Dwg. (62370).
2. Existing conditions to be field verified by Contractor.
3. Existing Tank A overflow location does not match location shown on Reference Dwg. 900-C-3003. Approximate location marked on drawing. New tank overflow and drain pipes are to be located based on existing overflow pipe location.
4. Dimensions marked with an asterisk (*) to be field verified.

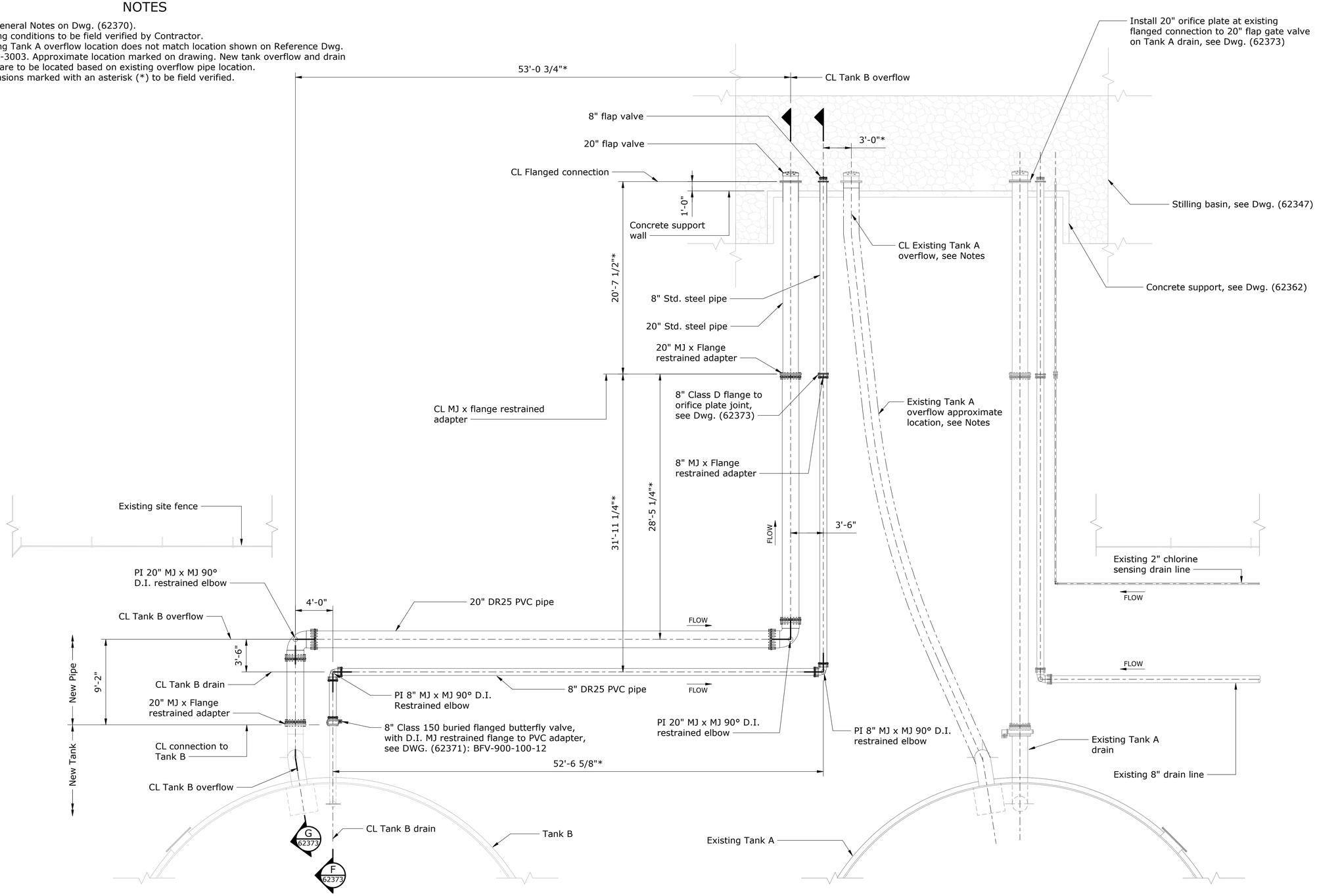

TANK B OVERFLOW AND DRAIN PLAN

0 5' 10'
Scale: 3/16" = 1'-0"

BUREAU OF RECLAMATION

ALWAYS THINK SAFETY

U.S. DEPARTMENT OF THE INTERIOR
BUREAU OF RECLAMATION
1695, NAVAJO-GALLUP WATER SUPPLY PROJECT, NM
NEW MEXICO

CUTTER LATERAL - REACH 21

REGULATING TANK 3B

Draft
For Internal Use Only
Not For Distribution

KYLE TAYLOR
DESIGNED
KYLE TAYLOR
DRAWN
RICHARD FRISZ
CHECKED
BRANT BACA, P.E.
TECH. APPR. BRANT BACA, P.E.
Approver
APPROVED Approver

DENVER, CO 2/26/2024

REGULATING TANK #3

TANK DRAIN AND OVERFLOW PLAN

1695-D-62372
Sheet 3

DESIGN PHASE: Project Status
DATE AND TIME PLOTTED: 5/23/2025 9:09:21 AM
CAD SYSTEM: Revit 2020
CAD FILENAME: C:\Users\ktaylor\Documents\Reg Tank 3B - MEP - Central_ktaylor375.rvt

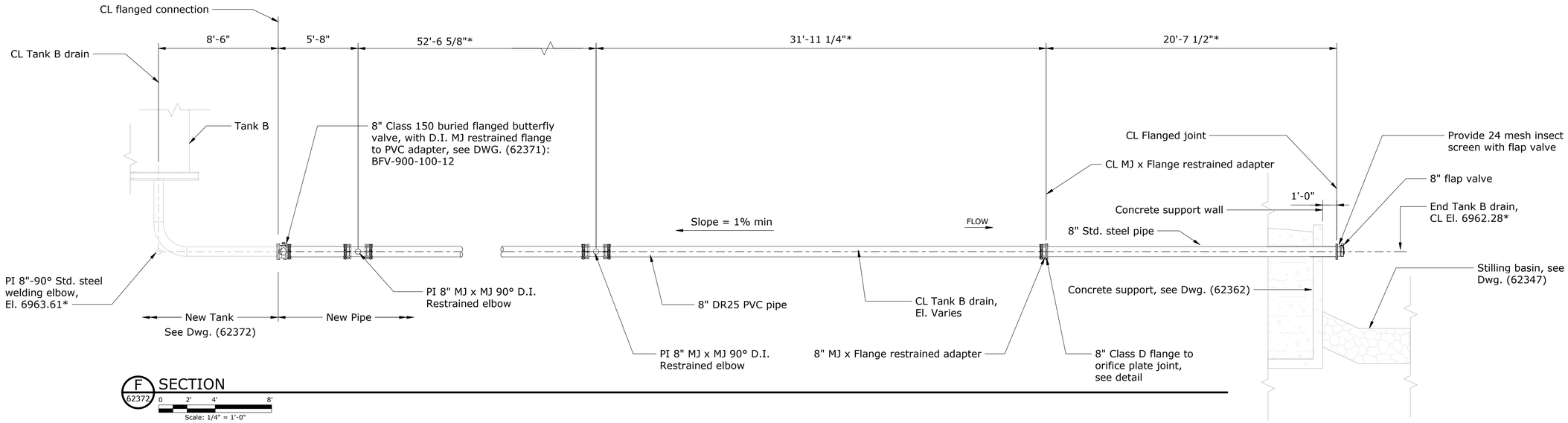

F 62372 SECTION

Scale: 1/4" = 1'-0"

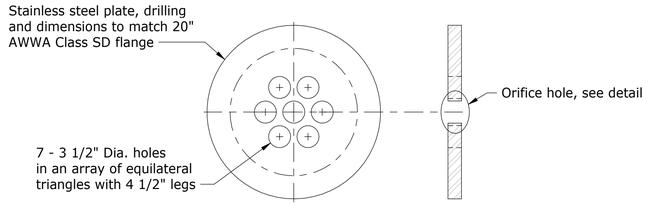

20" ORIFICE PLATE DETAIL

(NOT TO SCALE)

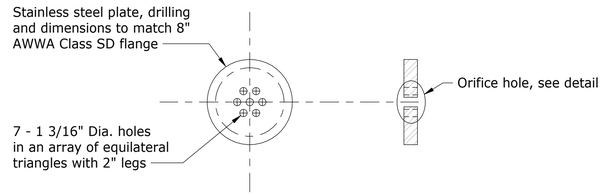

8" ORIFICE PLATE DETAIL

(NOT TO SCALE)

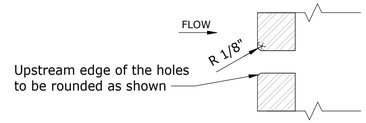

ORIFICE HOLE DETAIL

(NOT TO SCALE)

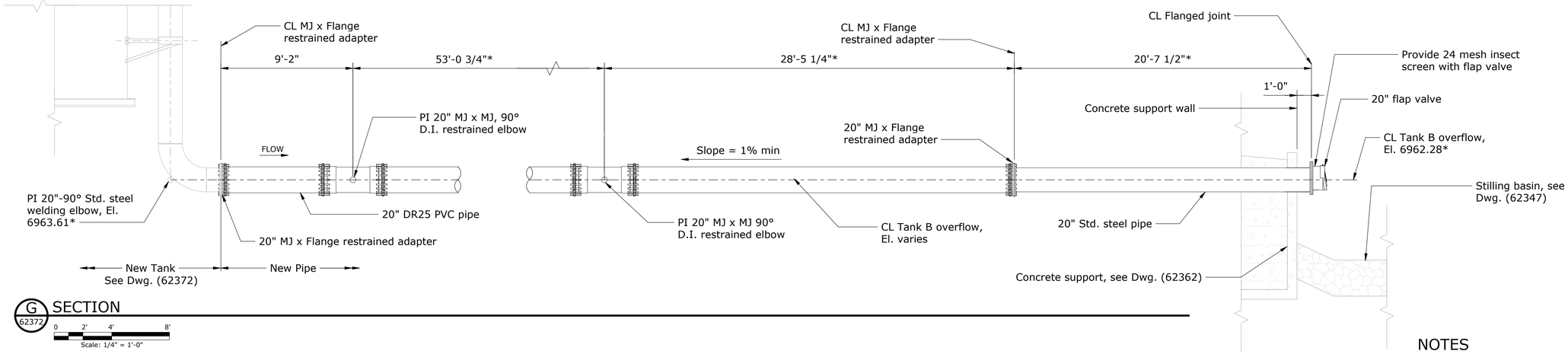

G 62372 SECTION

Scale: 1/4" = 1'-0"

NOTES

1. See General Notes on Dwg. (62370).
2. Existing conditions to be field verified by Contractor.
3. Dimensions marked with an asterisk (*) to be field verified.
4. Overflow weir box, weir box supports, and overflow pipe supports are conceptual only, Contractor to design.
5. Overflow pipe and suports shall accomodate up to 1.5 inch differential settlement.
6. Match drain and overflow elevations and slopes to existing Tank A.

BUREAU OF RECLAMATION

ALWAYS THINK **SAFETY**

U.S. DEPARTMENT OF THE INTERIOR
BUREAU OF RECLAMATION
1695, NAVAJO-GALLUP WATER SUPPLY PROJECT, NM
NEW MEXICO

CUTTER LATERAL - REACH 21

REGULATING TANK 3B

For Planning Use Only
Draft
Not For Distribution

DESIGNED	KYLE TAYLOR
DRAWN	KYLE TAYLOR
CHECKED	RICHARD FRISZ
TECH. APPR.	BRANT BACA, P.E.
APPROVED	Approver
	DENVER, CO 5/18/2025

REGULATING TANK #3

TANK DRAIN AND OVERFLOW SECTIONS

1695-D-62373

Sheet 4

DESIGN PHASE: Project Status

DATE AND TIME PLOTTED: 5/12/2025 8:55:48 AM

CAD SYSTEM: Revit 2020

CAD FILENAME: C:\Users\kteylor\Documents\Reg Tank 3B_MEP - Central_ktaylor375.rvt

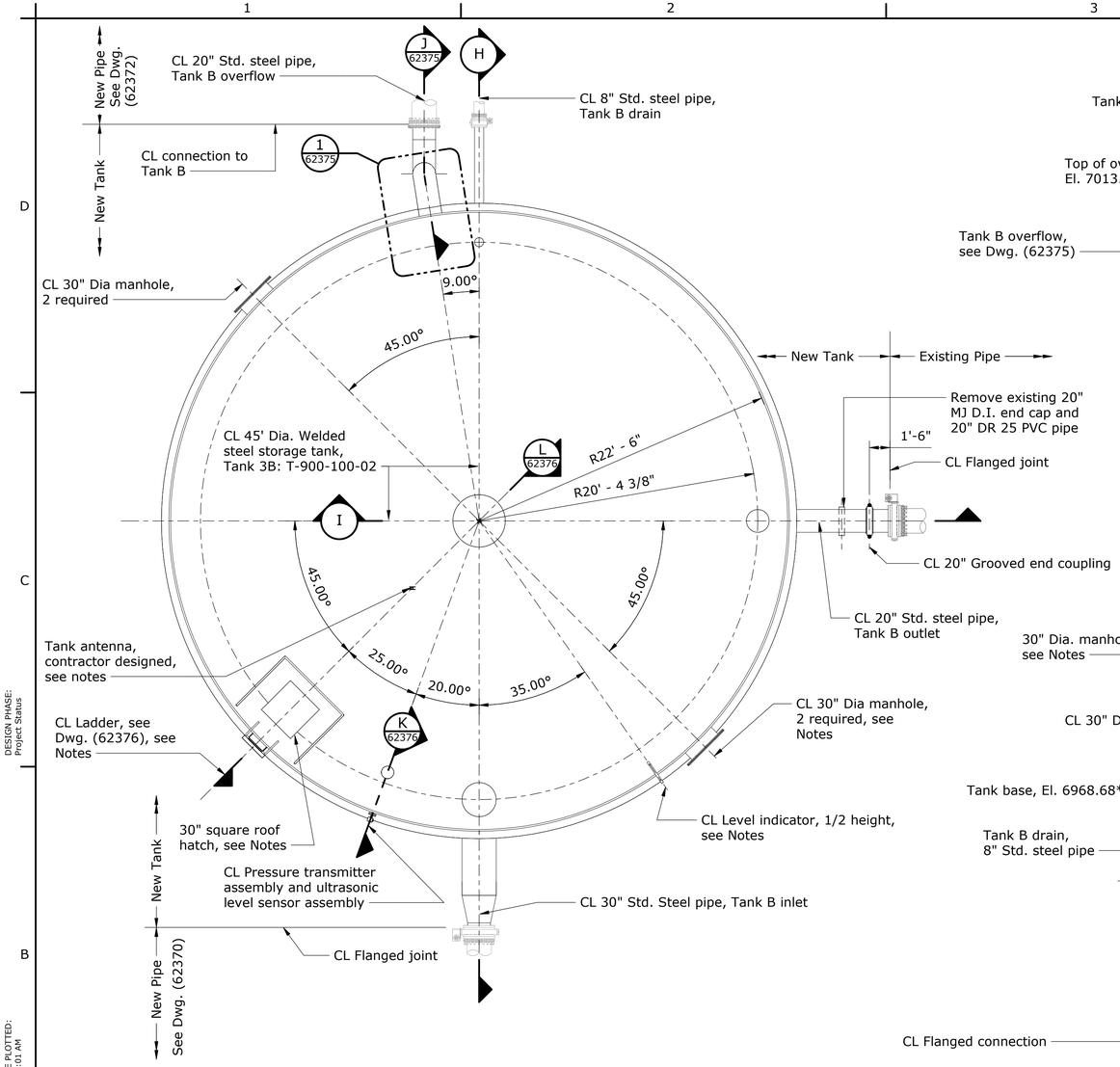

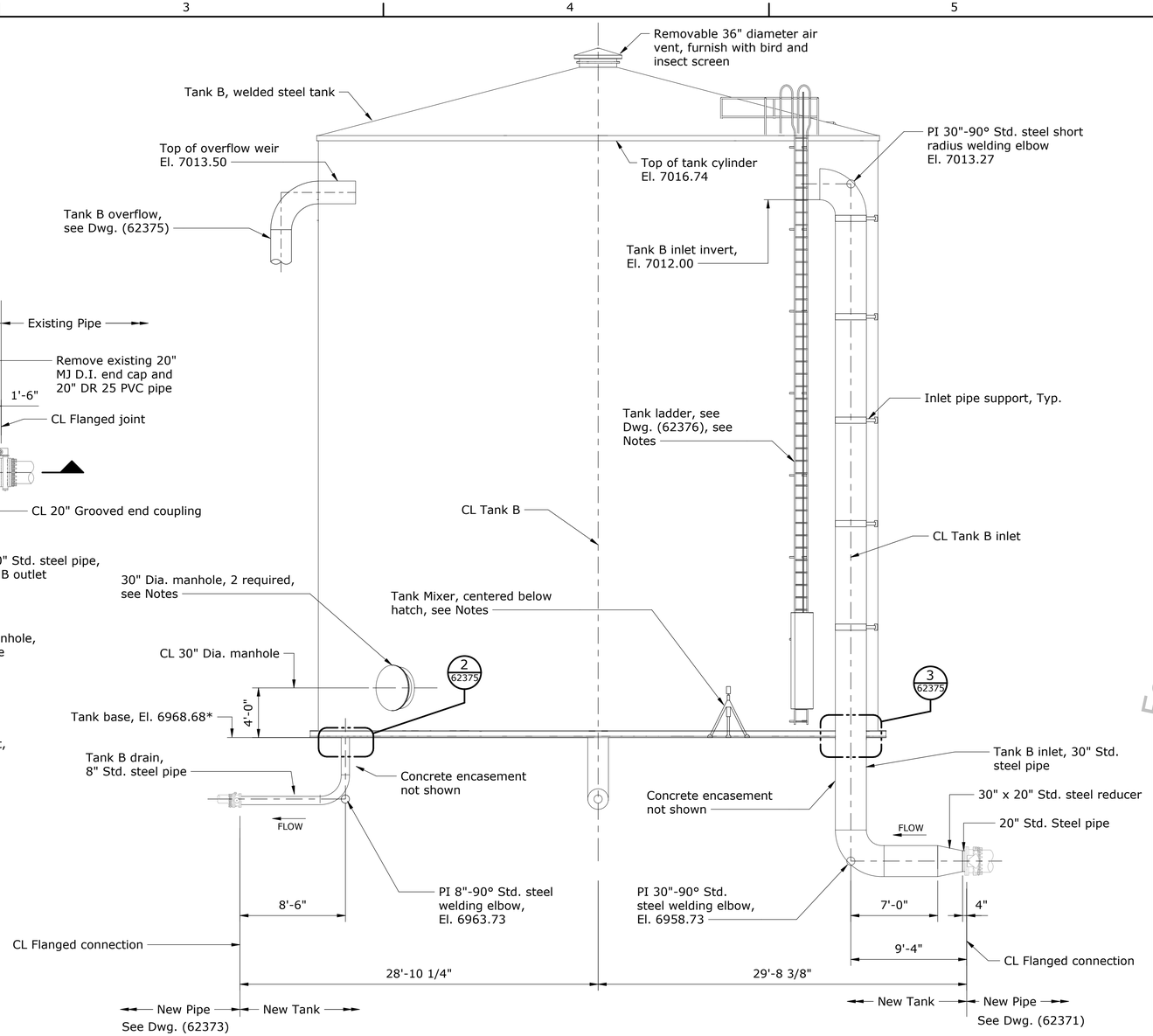

REGULATING TANK 3B WATER STORAGE TANK PLAN

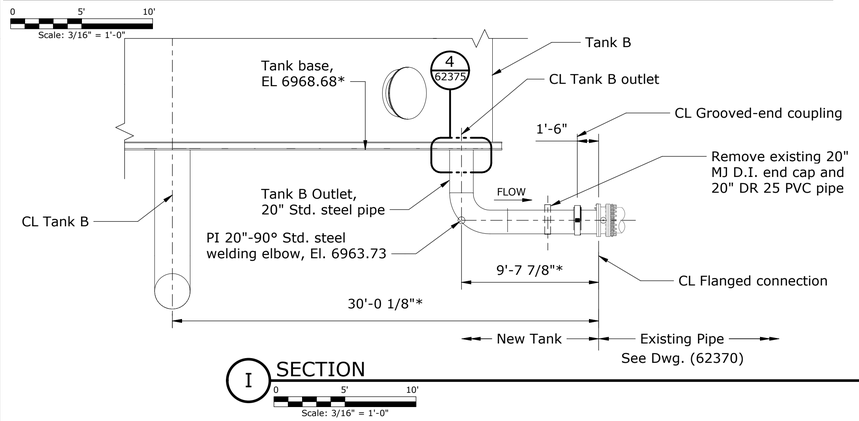

I SECTION

Scale: 3/16" = 1'-0"

H SECTION

Scale: 3/16" = 1'-0"

NOTES

1. See General Notes on Dwg. (62370).
2. Tank anchors and anchor welds to be determined by tank manufacturer. Use template for anchor bolt spacing to verify correct location of anchors subject to Government approval. See Detail 5 on Dwg. (62376).
3. Contractor to design ladder and ladder supports. Ladder and supports shown are conceptual only, see specifications.
4. Ladder safety cages and landings are not permitted.
5. Contractor to design and locate antenna. Antenna shown is conceptual only, see specifications.
6. Contractor to design inlet riser pipe supports. Supports shown are conceptual only, see specifications.
7. Tank hatches and other openings shall be water and light tight with the hatch lip 4 inches above the tank roof.
8. Contractor to provide and install a tank mixer for the both the new Regulating Tank 3B and the existing Regulating Tank 3A. Center below hatch opening.

DESIGN PHASE: Project Status

DATE AND TIME PLOTTED: 5/22/2025 9:00:01 AM

CAD SYSTEM: Revit 2020

CAD FILENAME: C:\Users\KaTaylor\Documents\Reg Tank 3B - MEP - Central_ktaylor375.rvt

BUREAU OF RECLAMATION

ALWAYS THINK **SAFETY**

U.S. DEPARTMENT OF THE INTERIOR
BUREAU OF RECLAMATION
1695, NAVAJO-GALLUP WATER SUPPLY PROJECT, NM
NEW MEXICO

CUTTER LATERAL - REACH 21

REGULATING TANK 3B

For Construction Use Only
Draft
Not For Distribution

KYLE TAYLOR	
DESIGNED	
KYLE TAYLOR	
DRAWN	
RICHARD FRISZ	
CHECKED	
BRANT BACA, P.E.	
TECH. APPR.	BRANT BACA, P.E.
Approver	
APPROVED	Approver
DENVER, CO	5/18/2025

REGULATING TANK #3

STEEL TANK
PLAN AND SECTIONS

1695-D-62374
Sheet 5

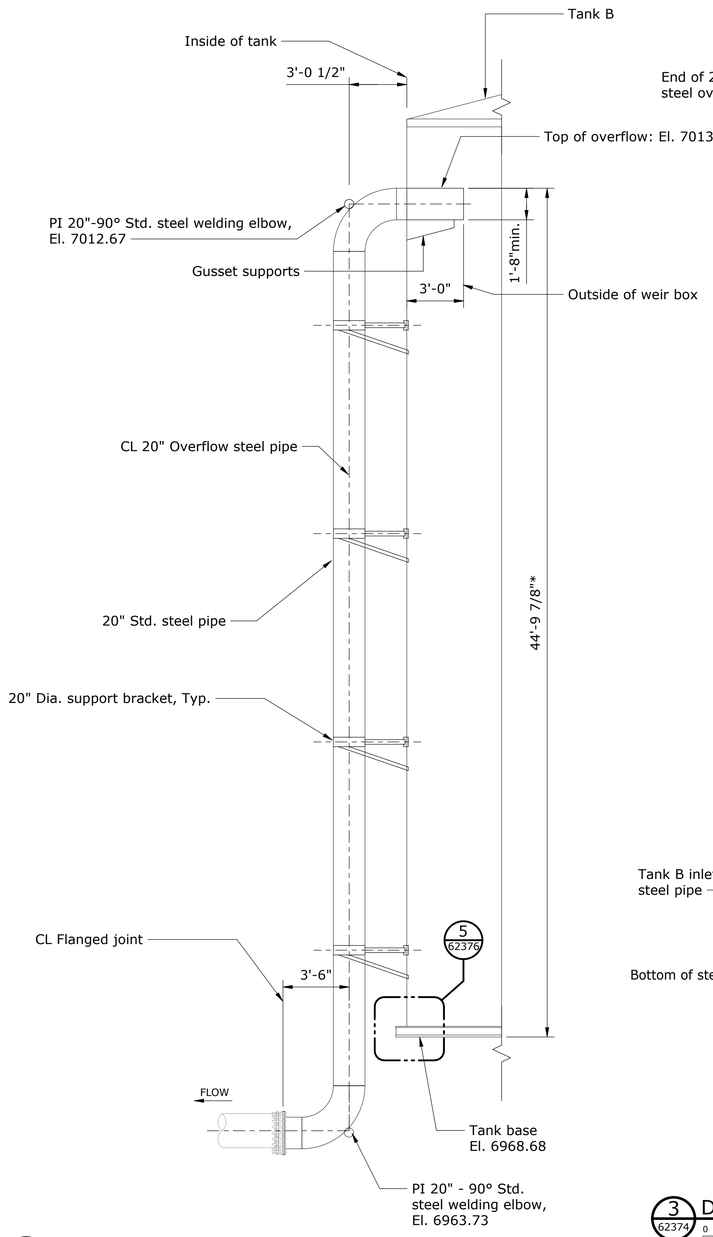

J 62374 SECTION

Scale: 1/4" = 1'-0"

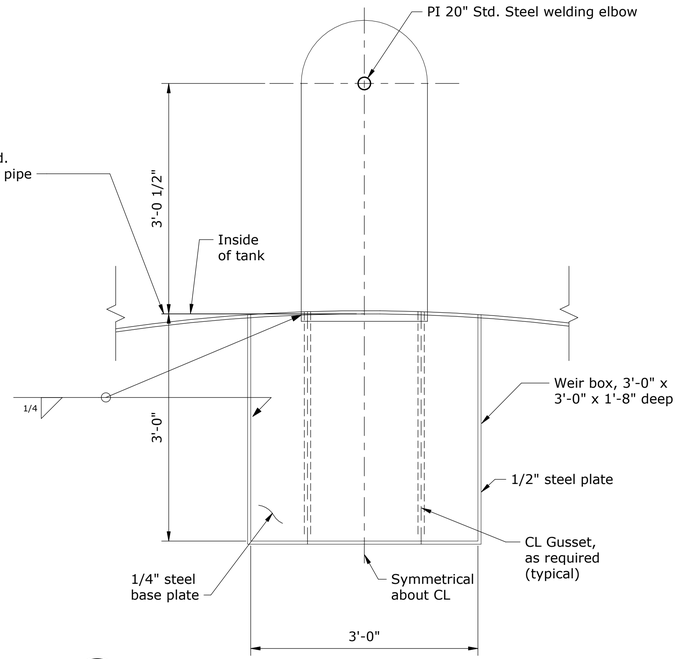

1 62374 DETAIL

Scale: 1" = 1'-0"

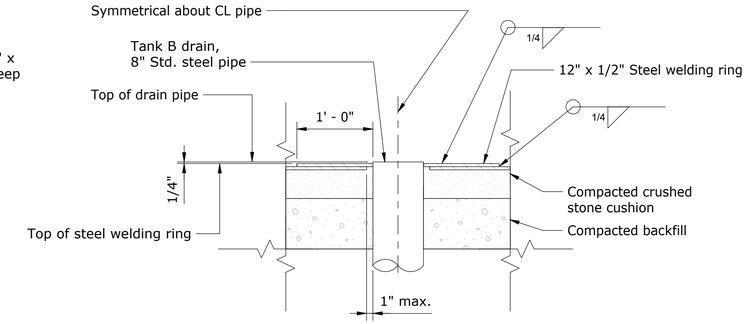

2 62374 DETAIL

Scale: 1" = 1'-0"

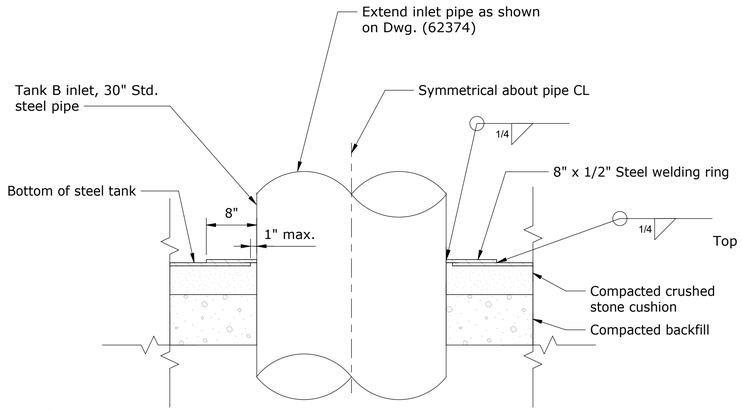

3 62374 DETAIL

Scale: 1" = 1'-0"

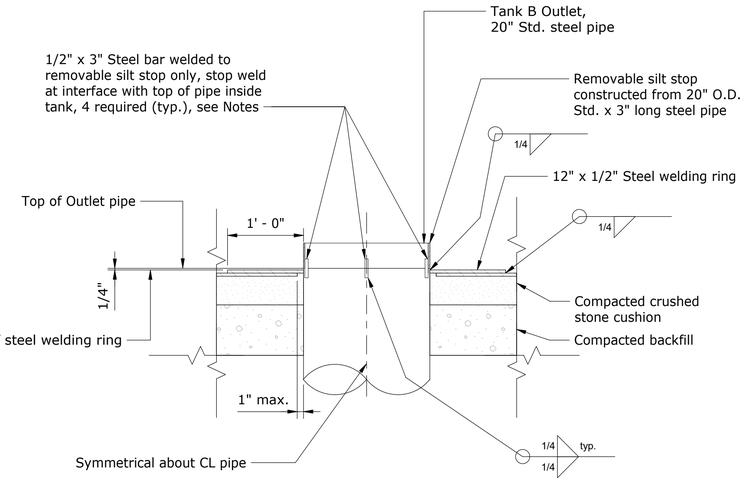

4 62374 DETAIL

Scale: 1" = 1'-0"

NOTES

1. See General Notes on Dwg. (62370).
2. Ensure the outside diameter of silt stop steel bars is less than inside diameter of the outlet pipe. Adjust bars as needed to fit inside outlet pipe.
3. Overflow weir box, weir box supports, and overflow pipe supports are conceptual only, Contractor to design.
4. Overflow pipe and suports shall accomodate up to 1.5 inch of differential settlement.

BUREAU OF RECLAMATION

ALWAYS THINK **SAFETY**

U.S. DEPARTMENT OF THE INTERIOR
BUREAU OF RECLAMATION
1695, NAVAJO-GALLUP WATER SUPPLY PROJECT, NM
NEW MEXICO

CUTTER LATERAL - REACH 21
REGULATING TANK 3B

For Planning Use Only
Draft
Not For Distribution

KYLE TAYLOR	
DESIGNED	KYLE TAYLOR
DRAWN	RICHARD FRISZ
CHECKED	BRANT BACA, P.E.
TECH. APPR.	BRANT BACA, P.E.
Approver	
APPROVED	Approver

DENVER, CO 5/18/2025

REGULATING TANK #3

STEEL TANK SECTION AND DETAILS

1695-D-62375
Sheet 6

DESIGN PHASE:
Project Status

DATE AND TIME PLOTTED:
5/22/2025 9:00:20 AM

CAD SYSTEM:
Revit 2020

CAD FILENAME:
C:\Users\ktaylor\Documents\Reg Tank 3B - MEP - Central_ktaylor375.rvt

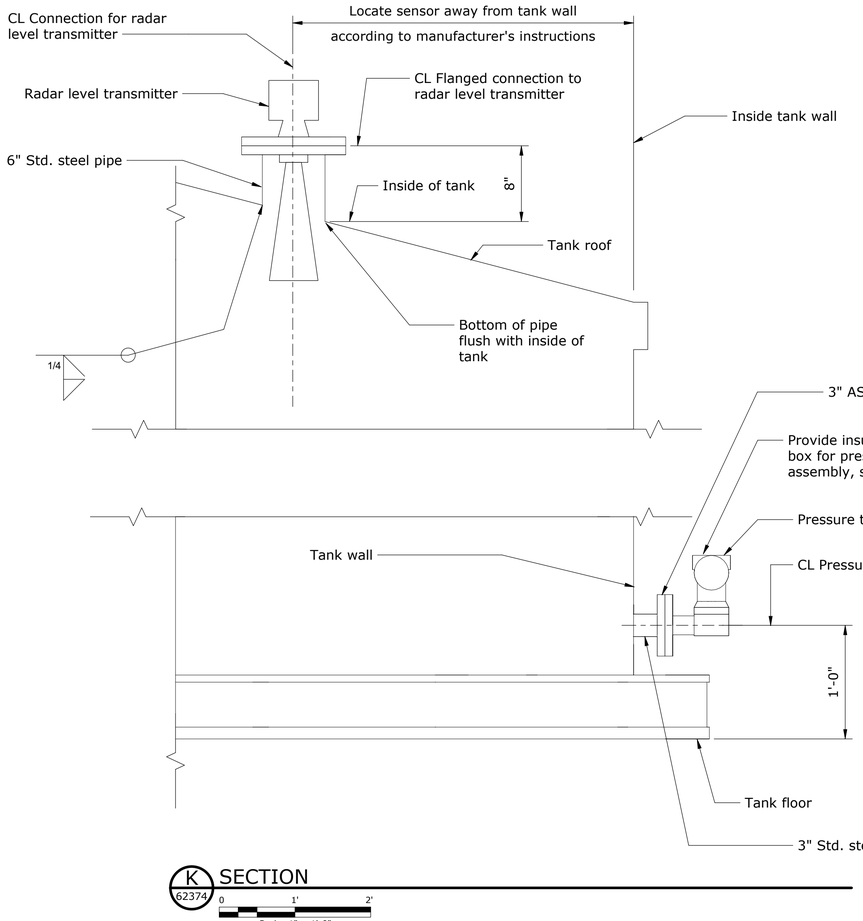

K 62374 SECTION

Scale: 1" = 1'-0"

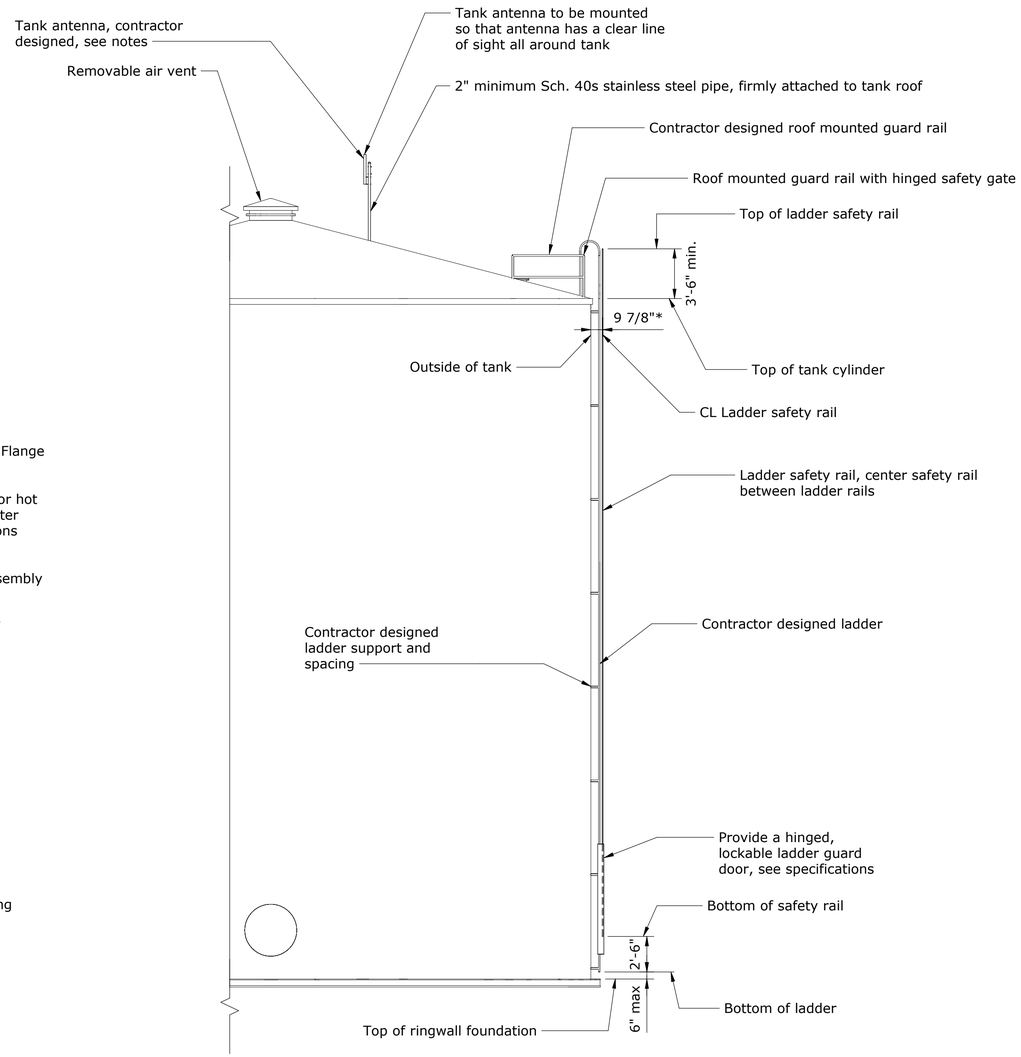

L 62374 SECTION

Scale: 3/16" = 1'-0"

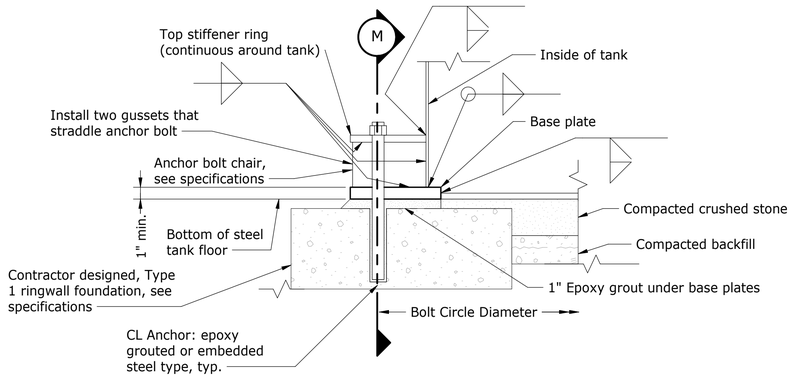

5 62375 DETAIL

Scale: 1 1/2" = 1'-0"

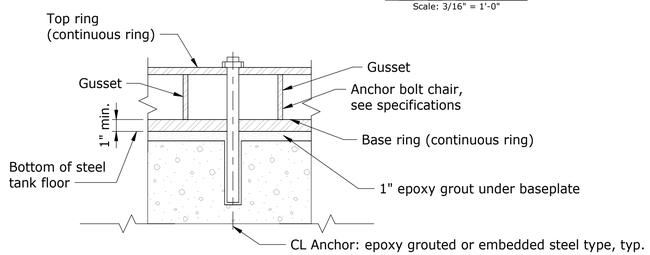

M SECTION

Scale: 1 1/2" = 1'-0"

NOTES

1. See General Notes on Dwg. (62370).
2. Contractor to design ladder and ladder supports. Ladder and supports shown are conceptual only, see specifications.
3. Contractor to design and locate antenna. Antenna shown is conceptual only, see specifications.

BUREAU OF RECLAMATION

ALWAYS THINK **SAFETY**

U.S. DEPARTMENT OF THE INTERIOR
BUREAU OF RECLAMATION
1695, NAVAJO-GALLUP WATER SUPPLY PROJECT, NM
NEW MEXICO

CUTTER LATERAL - REACH 21

For Planning Use Only
Draft
Not For Distribution

KYLE TAYLOR	
DESIGNED	
KYLE TAYLOR	
DRAWN	
RICHARD FRISZ	
CHECKED	
BRANT BACA, P.E.	
TECH. APPR.	BRANT BACA, P.E.
Approver	
APPROVED	Approver
DENVER, CO	5/18/2025

REGULATING TANK #3

STEEL TANK SECTIONS AND DETAIL

1695-D-62376

Sheet 7

DESIGN PHASE: Project Status

DATE AND TIME PLOTTED: 5/23/2025 9:00:29 AM

CAD SYSTEM: Revit 2020

CAD FILENAME: C:\Users\ktaylor\Documents\Reg Tank 3B - MEP - Central_ktaylor375.rvt

INSTRUMENTATION DEVICE AND FUNCTION SYMBOLS

Shared Display & Control System	Programmable Logic Controller	Computer System and Software	Discrete Instrument	Location and Accessibility
				Located in field Not panel, cabinet, or console mounted Visible at field location Normally operator accessible
				Located in or on front of central or main panel or console Visible on front of panel or on video display Normally operator accessible at panel front or console
				Located in rear of central or main panel Located in cabinet behind panel Not visible on front of panel or on video display Not normally operator accessible at panel or console
				Located in or on front of secondary or local panel or console Visible on front of panel or on video display Normally operator accessible at panel front or console
				Located in rear of secondary or local panel Located in field cabinet Not visible on front of panel or on video display Not normally operator accessible at panel or console
				Interlock or control function
				Undefined Interlock
				PLC Function
				Pilot Light or Gauge Glass Illuminator
				Dual Function or Instruments sharing common housing

FACILITY AREA DESIGNATION

Position	Description	Name		Number
1	Lateral	San Juan		S
		Cutter		C
2 & 3	Site	Lateral	Facility	
		San Juan	Intake & River Pumping Plant	00A
			Reservoir	00B
			Pumping Plant No. 1	01A
			Morgan Lake Tank	01B
			Water Treatment Plant	02
			Pumping Plant No. 2	03
			Pumping Plant No. 3	04
			Pumping Plant No. 4	05
			Pumping Plant No. 7	06
			Pumping Plant No. 8	07
			Black Hat Tank	08
			McKinley Surge Tank	09
			NAPI Turnout	11
			Sanostee/Burnham Turnout	12
			Newcomb Turnout	13
			Naschitti Turnout	14
			Crownpoint Turnout	15
			Rock Springs Turnout	16
		Cutter	Cutter Dam	01
			Pumping Plant No. 1	02
			Pumping Plant No. 2	03
			Regulating Tank No. 2	04
			Regulating Tank No. 3	See Note
			Reach 21 Booster Pumping Plant	See Note
			NAPI Turnout	11
4 & 5	Physical Location	Yard		01
		Pump Room		02
		Air Chamber Room		03
		Chemical Building		04
		Turnout Building		05

NGWSP FACILITIES

Lateral	Facility	Formal Name
San Juan	Intake & River Pumping Plant	
San Juan	Reservoir	
San Juan	Pumping Plant No. 1	
San Juan	Morgan Lake Tank	
San Juan	Water Treatment Plant	
San Juan	Pumping Plant No. 2	Tsé Da' azkání
San Juan	Pumping Plant No. 3	Tó Ałts'íísí
San Juan	Pumping Plant No. 4	Tooh Haltsooi
San Juan	Pumping Plant No. 7	Bahastl'ah
San Juan	Pumping Plant No. 8	Tohlakai
San Juan	Pumping Plant No. 12	
San Juan	Pumping Plant No. 13	Tsé Íí'áhí
San Juan	Pumping Plant No. 14.1	Tsé Daat'ees
San Juan	Pumping Plant No. 14.2	Iyanbito
San Juan	Pumping Plant No. 14.6	
San Juan	Pumping Plant No. 17.a	Tsé Łichii dah Azkání
Cutter	Cutter Dam	
Cutter	Pumping Plant No. 1	
Cutter	Pumping Plant No. 2	
Cutter	Regulating Tank No. 2	
Cutter	Water Treatment Plant	
Cutter	Regulating Tank No. 3	
Cutter	Reach 21 Booster Pumping Plant	

NOTES

1. Equipment and instrumentation symbols are based on ANSI/ISA and PIP standards.
2. Pumping Plant piping diagrams provided for example only. Manufacturer to provide new piping and instrumentation diagrams based on their standard designs.
3.

INSTRUMENT AND FUNCTION IDENTIFICATION

Letter	Column 1 Measuring/Initiating Variable	Column 2 Variable Modifier	Column 3 Readout/Passive Function	Column 4 Output/Active Function	Column 5 Function Modifier
A	Analysis		Alarm		
B	Burner, Combustion		Users Choice	Users Choice	Users Choice
C	Users Choice			Control	Close
D	Users Choice	Difference,Differential			Deviation
E	Voltage		Sensor, Primary Element		
F	Flow, Flow Rate	Ratio			
G	Users Choice		Glass, Gauge, Viewing Device		
H	Hand				High
I	Current		Indicate		
J	Power		Scan		
K	Time, Schedule	Time Rate of Change		Control Station	
L	Level		Light		Low
M	Users Choice				Middle, Intermediate
N	Users Choice		Users Choice	Users Choice	Users Choice
O	Users Choice		Orifice, Restriction		Open
P	Pressure		Point (Test Connection)		
Q	Quantity	Integrate, Totalize	Integrate, Totalize		
R	Radiation		Record		Run
S	Speed, Frequency	Safety		Switch	Stop
T	Temperature			Transmit	
U	Multivariable		Multifunction	Multifunction	
V	Vibration, Mechanical Analysis			Valve, Damper, Louver	
W	Weight, Force		Well, Probe		
X	Unclassified	X-axis	Accessory Devices, Unclassified	Unclassified	Unclassified
Y	Event State, Presence	Y-axis		Auxiliary Device	
Z	Position, Dimension	Z-axis, Safety Instrument System		Driver, Actuator, Unclassified final control element	

Note: For Cutter Lateral Regulating Tank No. 3 and Reach 21 Booster Pumping Plant, utilize non-standard area designations as follows:
Regulating Tank No. 3 Area Designation: 900
Reach 21 Booster Pumping Plant Area Designation: 950

TYPICAL TAG NUMBERS, TAGGING STANDARD & DESIGNATION

INSTRUMENTATION

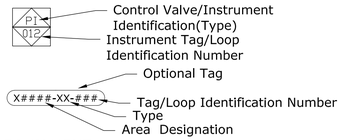

EQUIPMENT

VALVES

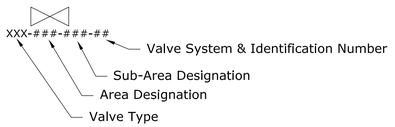

PIPE

OFF-PAGE CONNECTOR

Draft
Not For Construction
For Example Use Only

SAFETY ALWAYS THINK

U.S. DEPARTMENT OF THE INTERIOR
BUREAU OF RECLAMATION
1695, NAVAJO-GALLUP WATER SUPPLY PROJECT, NM
NEW MEXICO

CUTTER LATERAL - REACH 21
BOOSTER PLANT

KYLE TAYLOR DESIGNED
KYLE TAYLOR DRAWN
X CHECKED
X TECH. APPR.
X APPROVED
DENVER, CO 2023-03-15

P&ID

LEGEND

1695-D-62381

SHEET 1

LAST SAVED DATE
2023-03-15
LAST SAVED BY
KTAYLOR

CAD SYSTEM
AutoCAD Civil 3D 2025 (LMS TECH)
CAD FILENAME
1695-D-R21BPID1.DWG

VALVE SYMBOLS

Symbol	Description
	Butterfly Valve
	Ball Valve
	Globe Valve
	Gate Valve
	Plug Valve
	Needle Valve
	Pinch Valve
	Angled Valve
	Three Way Valve
	Four Way Valve
	Knife Valve
	Diaphragm Valve
	Rotary Valve
	Stop Check Valve
	Check Valve
	Control Valve
	Rupture Disc (Pressure Relief)
	Rupture Disc (Vacuum Relief)
	Air Release Valve
	Vacuum Release Valve
	Combination Air Valve
P	Pilot Operated Relief Valve
	Pressure Relief Valve
	Pressure and Vacuum Relief Valve
	Vacuum Relief Valve

CONTROL VALVE ACTUATOR SYMBOLS

Symbol	Description
	Pressure Reducing Regulator
	Pressure Reducing Regulator with External Tap
	Back Pressure Regulator
	Back Pressure Regulator with External Tap
	Differential Pressure Reducing Regulator
	Pressure Reducing Regulator with Integral Outlet
	Piston/Cylinder Actuator
	Handwheel/Manual Actuator
	Diaphragm Actuator - Spring Return Actuator
	Pressure Balanced Diaphragm Actuator
	Diaphragm Actuator
	Throttling Actuator
	Spring Actuator
M	Motor Actuator
S	Solenoid Actuator
E/H	Electro-Hydraulic Actuator
D	Digital Actuator
S	Solenoid Actuator with Manual Reset
S	Three-way Solenoid Actuator

TANK AND VESSEL COMPONENTS

Symbol	Description
	Open Top Tank
	Dome Roof Tank
	Cone Roof Tank
	Pulsation Damper
	Vent

PUMPS AND COMPRESSORS

Symbol	Description
	Pump
	Horizontal Centrifugal Pump
	Vertical Can Pump
	Vertical Turbine Pump
	Peristaltic Pump
	Centrifugal Compressor
	Screw Compressor

MECHANICAL COMPONENTS

Symbol	Description
	Heat Exchanger
.x.	Concentric Reducer
.x.	Eccentric Reducer
	Flange
	Hose Connection
	Cap
	Expansion Joint
	Vent Silencer
	Flexible Hose
	Open Drain

MEASUREMENT INSTRUMENTS

Symbol	Description
	Chlorine Residual Analyzer
	Calibration Column

GATES

Symbol	Description
	Weir Gate
	Fabricated Slide Gate
	Stop Log
	Radial Gate
	Dual Leaf Gate

FLOW ELEMENTS

Symbol	Description
M	Magnetic Flow Meter
	Pitot Tube Flow Meter
	Orifice

FITTINGS

Symbol	Description
	Transition coupling
	Electrofusion coupling

FILTRATION DEVICES

Symbol	Description
	Flow Conditioning Device
	Conveyor Scraper
	Duplex Strainer
	Y-Strainer
	Trash Rack

DRIVERS AND MIXERS

Symbol	Description
	Electric Motor
	Agitator

BUREAU OF RECLAMATION

ALWAYS THINK SAFETY

U.S. DEPARTMENT OF THE INTERIOR
BUREAU OF RECLAMATION

1695, NAVAJO-GALLUP WATER SUPPLY PROJECT, NM
NEW MEXICO

CUTTER LATERAL - REACH 21
BOOSTER PLANT

Draft
For Planning Purposes Only
Not For Distribution

KYLE TAYLOR DESIGNED	
KYLE TAYLOR DRAWN	
X CHECKED	
X TECH. APPR.	TITLE
X APPROVED ADMIN APPROVAL - TITLE	
DENVER, CO	2023-03-15

P&ID

SYMBOLS & ABBREVIATIONS

1695-D-62382

SHEET 1

LAST SAVED DATE
2023-03-15
LAST SAVED BY
KTAYLOR

CAD SYSTEM
AUTOCAD 2023 (LMS TECH)
CAD FILENAME
1695-D-R21BPID2.DWG

SIGNAL PATHS

Linetype	Function
	Primary Fluid System
	Secondary Fluid System
	Existing Fluid System
	Instrument Supply
	Jacketed Pipe Segment
	Electrical Signal
	Pneumatic Signal
	Hydraulic Signal
	Data/Software Communication
	Capillary Tube
	Mechanical Link

EQUIPMENT TYPE

Designation	Description
A	Agitator, Mixer
AC	Air Chamber
ADV	Automatic Drain Valve
ARV	Air Release Valve
AVC	Combination Air Valve
BBV	Block and Bleed Valve
BFP	Back Flow Preventer
BFV	Butterfly Valve
BGT	Butterfly Gate
BV	Ball Valve
C	Compressor
CV	Check Valve
FGT	Flap Gate
FIL	Filter
GLV	Globe Valve
GV	Gate Valve
HTR	Heater
IMV	Integrated Manifold Valve
LGT	Leaf Gate
M	Motor
MBV	Motor Operated Ball Valve
MBFV	Motor Operated Butterfly Valve
P	Pump
PCV	Pressure Control Valve
PRV	Pressure Relief Valve
PSV	Pressure Safety Valve
RGT	Radial Gate
SGT	Slide Gate
SL	Stop Log
SR	Strainer
SRB	Bucket Strainer
SRY	Y-Strainer
SRT	T-Strainer
SV	Solenoid Valve
TK	Tank
TR	Trash Rack
VRV	Air Vacuum Valve
WGT	Weir Gate

LINE SERVICE CODES

AV	Atmospheric Vent
BD	Blowdown
BRR	Brine Return
BRS	Brine Supply
CHS	Chemical Sewer
CLF	Chlorine Feed
CLI	Chlorine Injection
CLS	Chlorine Sample
CV	Cold Vent
CWR	Cooling Water Return
CWS	Cooling Water Supply
DLGT	Dual Leaf Gate
DMW	Demineralized Water
DR	Drain
DS	Dilution Steam
DW	Drinking Water
FF	Flushing Fluid
FG	Fuel Gas
FO	Fuel Oil
FW	Fire Water
IA	Instrument Air
LNG	Liquefied Natural Gas
LO	Lube Oil
LPG	Liquefied Petroleum Gas
ME	Methanol
N	Nitrogen
NA	Caustic
NAS	Caustic Sewer
NG	Natural Gas
NH	Ammonia
OWS	Oily Water Sewer
OX	Oxygen
P	General Process
PA	Plant Air
PW	Process Water
RV	Relief Vent
RW	Raw Water
SO	Seal Oil
SS	Sanitary Sewer
STS	Storm Sewer
SW	Service Water
TWR	Tempered Water Return
TWS	Tempered Water Supply
WW	Waste Water

PIPE TYPE

Designation	Description
CS-3/8" W.T.	Carbon Steel $\frac{3}{8}$" Wall Thickness
CS-1/4" W.T.	Carbon Steel $\frac{1}{4}$" Wall Thickness
CS Sch 10	Carbon Steel Schedule 10
CS Sch 20	Carbon Steel Schedule 20
CS-Std	Carbon Steel Standard
CU	Copper
DI 250	Ductile Iron Class 250
HDPE 17	High Density Polyethylene Dimension Ratio 17
PVC DR 18	Polyvinyl Chloride Dimension Ratio 18
PVC DR 25	Polyvinyl Chloride Dimension Ratio 25
PVC Sch 80	Polyvinyl Chloride Schedule 80
PVC Sch 40	Polyvinyl Chloride Schedule 40
SS-Std	Stainless Steel Standard
SS 316L Sch 80	Stainless Steel 316L Schedule 80

VALVE SYSTEM DESIGNATION

Designation	Description
AC#	Air Chamber
ACS	Air Chamber System
CS	Chlorine Sampling
CST	Chlorine Storage Tank
CF	Chlorine Feed
DH	Discharge Header
ES	Emergency Shower
ST	Storage Tank / Surge Tank
TO	Turnout
TS#	Tank Sampling
U#	Unit

BUREAU OF RECLAMATION

FOR SAFETY THINK ALWAYS

U.S. DEPARTMENT OF THE INTERIOR
BUREAU OF RECLAMATION

1695, NAVAJO-GALLUP WATER SUPPLY PROJECT, NM
NEW MEXICO

CUTTER LATERAL - REACH 21
BOOSTER PLANT

Draft
For Review Only
Not For Distribution

KYLE TAYLOR
DESIGNED
KYLE TAYLOR
DRAWN
X
CHECKED
X
TECH. APPR. TITLE
X
APPROVED
ADMIN APPROVAL - TITLE
DENVER, CO 2023-03-15

P&ID

SYMBOLS & ABBREVIATIONS

1695-D-62383

SHEET 1

LAST SAVED DATE
2023-03-23
LAST SAVED BY
KTAYLOR

CAD SYSTEM
AutoCAD 2023 (LMS TECH)
CAD FILENAME
1695-D-R21BPID3.DWG

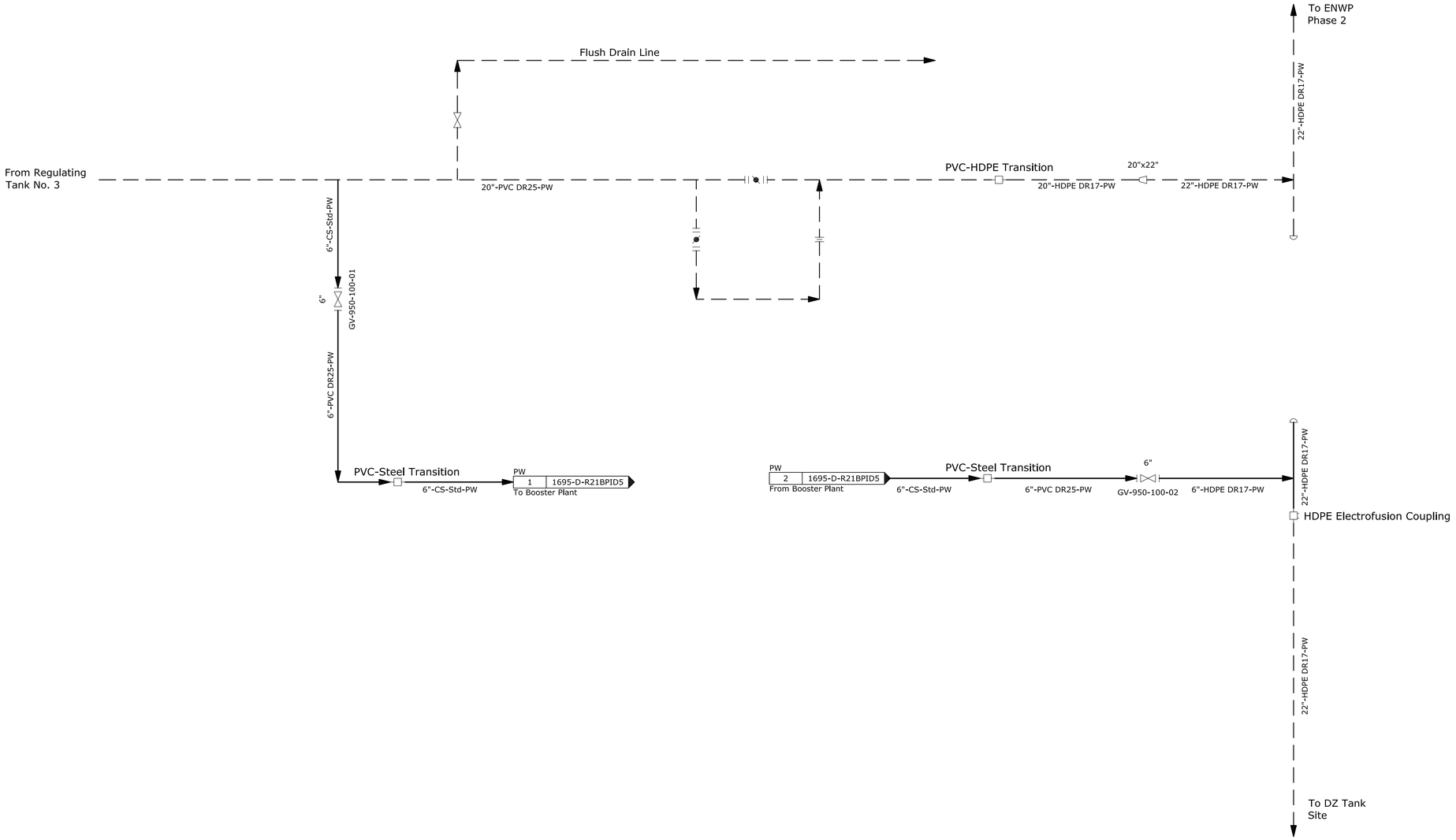

BUREAU OF RECLAMATION

ALWAYS THINK SAFETY

U.S. DEPARTMENT OF THE INTERIOR
BUREAU OF RECLAMATION
1695 NAVAJO-GALLUP WATER SUPPLY PROJECT, NM
NEW MEXICO

CUTTER LATERAL - REACH 21

BOOSTER PLANT

For Internal Use Only
Draft
Not For Distribution

KYLE TAYLOR
DESIGNED
KYLE TAYLOR
DRAWN
CHECKED
TECH. APPR. XXX, P.E.
APPROVED
ADMIN APPROVAL - XXX

DENVER, CO 2023-03-15

PIPING AND INSTRUMENTATION DIAGRAM

REACH 21 BOOSTER PLANT SITE

1695-D-62384

SHEET 1

LAST SAVED DATE
2025-05-22
LAST SAVED BY
KTAYLOR

CAD SYSTEM
AutoCAD 24.2S (LMS TECH)
CAD FILENAME
1695-D-R21BPID4.DWG

Premanufactured pump station, see specifications 22 11 35 for requirements.

6"-CS-Std-PW

PW

2	1695-D-R21BPID4

To ENWP Phase 3 Line Pipe

PW

1	1695-D-R21BPID4

From Reach 21 Line Pipe

6"-CS-Std-PW

LAST SAVED DATE
2025-05-05
LAST SAVED BY
KTAYLOR

CAD SYSTEM
AutoCAD 24.2S (LMS TECH)
CAD FILENAME
1695-D-R21BPID5.DWG

BUREAU OF RECLAMATION

ALWAYS THINK SAFETY

U.S. DEPARTMENT OF THE INTERIOR
BUREAU OF RECLAMATION
1695, NAVAJO-GALLUP WATER SUPPLY PROJECT, NM
NEW MEXICO

CUTTER LATERAL - REACH 21

BOOSTER PLANT

For Internal Use Only
Draft
Not For Distribution

KYLE TAYLOR
DESIGNED
KYLE TAYLOR
DRAWN
CHECKED
TECH. APPR. XXX, P.E.
APPROVED
ADMIN APPROVAL - XXX

DENVER, CO 2023-03-15

PIPING AND INSTRUMENTATION DIAGRAM

REACH 21
BOOSTER PLANT

1695-D-62385

SHEET 1

NOTES

1. Equipment and instrumentation symbols are based on ANSI/ISA and PIP standards.
2. Dashed piping indicates existing. Solid piping indicates new installation.
3.

PLANT CONTROL PLC ()

PLANT EQUIPMENT AND INSTRUMENTATION ()

ICP20C RADIO AT TANK

LS 900-100-02 | LI 900-100-02 | LS 900-100-01 | LI 900-100-01

STILLING BASIN

2"-CS-Std-DR | 2"-PVC Sch 80-DR | 8"-CS-Std-DR | 8"-PVC DR18-DR

20"-CS-Std-DR | 8"-CS-Std-DR | 20"-CS-Std-DR | 20"-CS-Std-DR | 20"-PVC DR25-DR | 20"-CS-Std-DR

LSH 900-100-02 | LSH 900-100-01

T-900-100-02
NEW
A-900-100-02
M-900-100-02

T-900-100-01
EXISTING
A-900-100-01
M-900-100-01

XS 900-100-02 | PE 900-100-02 | LTT 900-100-02 | XS 900-100-01 | LTT 900-100-01 | PE 900-100-01

20"-CS-Std-DR | 20"-PVC DR25-DR | 8"-CS-Std-DR | 8" | 8"-PVC DR25-DR | BFV-900-100-12 | 20" | 20"-CS-Std-DR | BFV-900-100-02

240 Volts

Mixer No.1 Motor Controller | Mixer Control | Hand-Off-Auto

30"-CS-Std-PW | 20"x30" | 20" | BFV-900-100-11 | 20"-CS-Std-PW | 20" | BFV-900-100-03 | 20"-PVC DR25-PW | 20" | BFV-900-100-04 | 20"-CS-Std-PW

20"x30" | 20" | BFV-900-100-05 | 8" | GV-900-100-01 | 20"x8" | 20"-PVC DR25-PW

20"-PVC DR25-PW | 20" | BFV-900-100-06 | 20"-PVC DR25-PW | 20"-PVC DR25-PW

2"-CS-Std-DR

ACP-900-01 | 120 Volts | AE 900-100-02 | ALT 900-100-01 | 1" | ?-BV-? | AE 900-100-01 | 1" | ?-BV-?

Mixer No.1 Motor Controller | Mixer Control | Hand-Off-Auto | 240 Volts

8"-PVC DR18-PW | 8"x20" | 20"-PVC DR25-PW | 8" | GV-900-100-09 | TEMPORARY TANK HOOKUP

20"-PVC DR25-PW | 20"x12" | 12" | GV-900-100-08 | TEMPORARY SURGE CHAMBER HOOKUP

20"-PVC DR25-PW | 20" | ?-900-100-07 | 2" | 2"-CS-Std-CLS | GV-900-100-10

TO REACH 21 | FROM CUTTER LATERAL WATER TREATMENT PLANT

— BUREAU OF — RECLAMATION

ALWAYS THINK SAFETY

U.S. DEPARTMENT OF THE INTERIOR
BUREAU OF RECLAMATION
1695, NAVAJO-GALLUP WATER SUPPLY PROJECT, NM
NEW MEXICO

CUTTER LATERAL - REACH 21
REGULATING TANK 3B

DRAFT

For Internal Use Only
Not For Distribution

KYLE TAYLOR	DESIGNED
KYLE TAYLOR	DRAWN
X	CHECKED
	TECH. APPR.
	APPROVED ADMIN APPROVAL
DENVER, CO	2024-03-13

PIPING AND INSTRUMENTATION DIAGRAM

REGULATING TANK #3 SITE

1695-D-62386

SHEET 1

LAST SAVED DATE
2025-05-20
LAST SAVED BY
KTAYLOR

CAD SYSTEM
AUTOCAD 2025 (LMS TECH)
CAD FILE NAME
1695-D-R21T3BPID.DWG

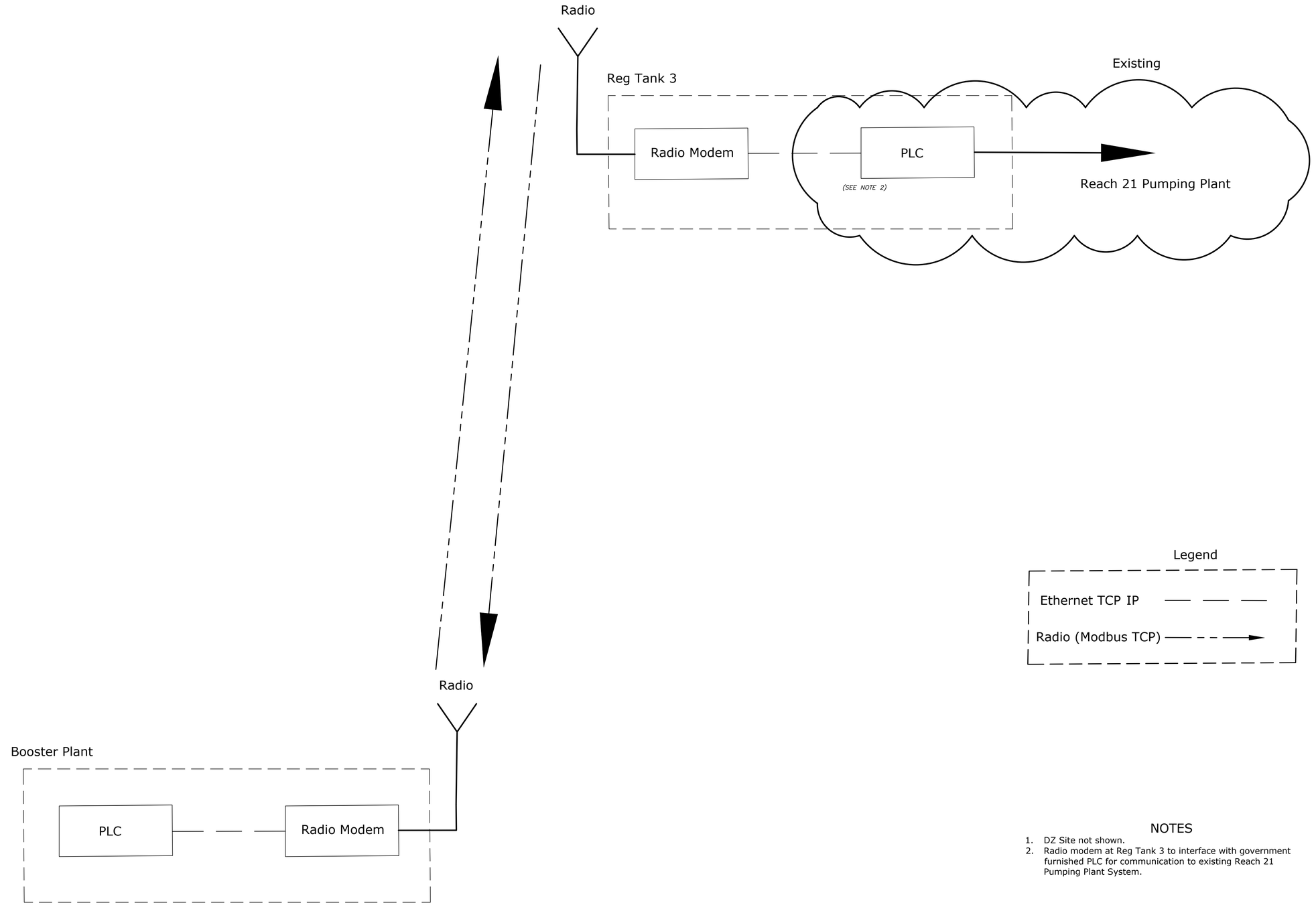

NOTES

1. DZ Site not shown.
2. Radio modem at Reg Tank 3 to interface with government furnished PLC for communication to existing Reach 21 Pumping Plant System.

BUREAU OF RECLAMATION

ALWAYS THINK SAFETY

U.S. DEPARTMENT OF THE INTERIOR
BUREAU OF RECLAMATION
PROJECT NAME
DIVISION
REACH 21
DZ BOOSTER PLANT

Draft
For Internal Use Only
Not For Distribution

Roland Cheng
DESIGNED
Roland Cheng
DRAWN
Christian Underwood
CHECKED
Lisa Gentry, P.E.
TECH. APPR. Electrical Engineer
Ashley Hannigan, P.E.
APPROVED
ADMIN APPROVAL
Denver, CO 2025-17-04

ELECTRICAL INSTALLATION

NETWORK DIAGRAM

1695-D-62387

SHEET 1

LAST SAVED DATE 2025-04-30
LAST SAVED BY RCHENG

CAD SYSTEM AutoCAD 24.25 (LMS TECH)
CAD FILENAME REACH 21 NETWORK DIAGRAM.DWG

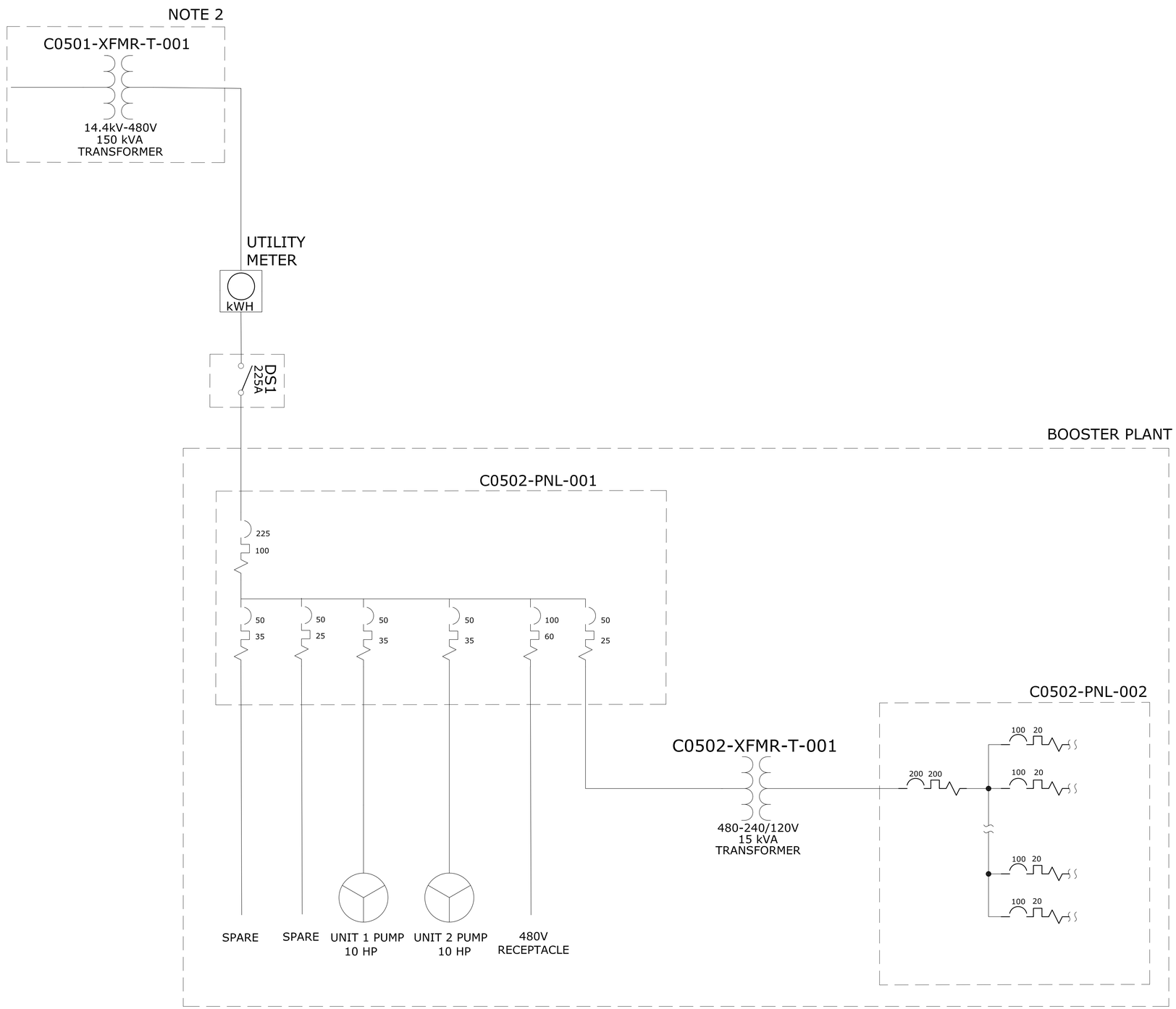

EXPLANATION

DEVICE	LOCATION	DESCRIPTION
C0501-XFMR-T-001	OUTSIDE	150kVA, 14.4kV-480V, POLE-MOUNTED TRANSFORMER BANK
C0502-PNL-001	BOOSTER PLANT	480V NEMA 12 THREE-PHASE PANELBOARD
C0502-XFMR-T-001	BOOSTER PLANT	15kVA, 480V-240/120V, STEP-DOWN TRANSFORMER
C0502-PNL-002	BOOSTER PLANT	240/120V NEMA 12 SINGLE-PHASE PANELBOARD
DS1	BOOSTER PLANT	DISCONNECT SWITCH

NOTES

1. PUMP STATION IS A PREFABRICATED BUILDING. SEE SPECIFICATION 22 11 35 FOR DETAILS.
2. POWER TO UTILITY METER PROVIDED BY LOCAL UTILITY COMPANY (JMEC).
3. BREAKER SIZES ARE ESTIMATES. VERIFY LOADS PRIOR TO VERIFYING BREAKER SIZES.
4. FINAL EQUIPMENT DESIGN TO BE COMPLETED BY COMTRACTOR.
5. METER AND DISCONNECT TO BE MOUNTED TO A BOOSTER PLANT WALL TO BE DETERMINED BY CONTRACTOR.

REFERENCE DRAWINGS

BOOSTER PLANT - ELEVATION VIEW	1695-D-62389
TANK 3 SITE & GROUND PLAN; PANEL & CABLE AND CONDUIT SCHEDULE	1695-D-62390

BUREAU OF RECLAMATION

ALWAYS THINK SAFETY

U.S. DEPARTMENT OF THE INTERIOR
BUREAU OF RECLAMATION
1695, NAVAJO-GALLUP WATER SUPPLY PROJECT, NM
NEW MEXICO

CUTTER LATERAL - REACH 21

BOOSTER PLANT

For Internal Use Only
Draft
Not For Distribution

DENNIS O'DONNELL
DESIGNED
DENNIS O'DONNELL
DRAWN
ERIC MENDLIN
CHECKED
X
TECH. APPR. TITLE
X
APPROVED
PEER REVIEWER - TITLE

DENVER, CO 2025-06-25

ELECTRICAL INSTALLATION

BOOSTER PLANT SINGLE-LINE DIAGRAM

1695-D-62388

SHEET 1

LAST SAVED DATE
2025-05-19
LAST SAVED BY
DODONNELL

CAD SYSTEM
AutoCAD 24.2S (LMS TECH)
CAD FILENAME
1695-D-62388_BOOSTER SINGLE LINE.DWG

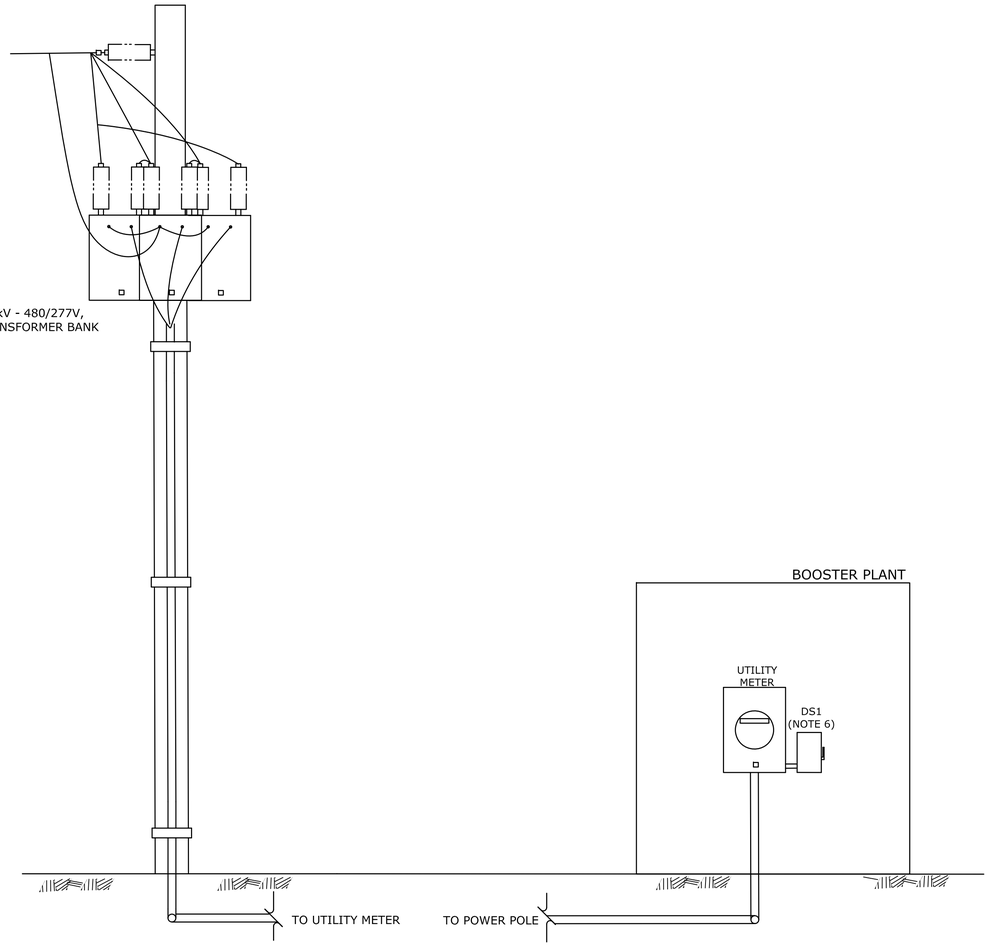

NOT TO SCALE

NOTES

1. This drawing is not to scale. Refer to architectural and structural drawings as well as manufacturer specifications for true dimensions.
2. Contractor to coordinate with local utility and client to ensure permanent power is delivered to the site.
3. The contractor will determine which wall the meter and disconnect switch will be mounted on as long as the location does not violate the NEC.
4. Contractor is responsible for providing temporary power for construction purposes.
5. No external or internal ground systems shown. Refer to specifications 22 11 35 and 26 05 20 for more grounding details.
6. Exterior DS1 disconnect switch to feed into 480V panel via wall penetration.

REFERENCE DRAWINGS

BOOSTER PLANT - SINGLE LINE	1695-D-62388
TANK 3 SITE & GROUND PLAN; PANEL & CABLE AND CONDUIT SCHEDULE	1695-D-62390

BUREAU OF RECLAMATION

ALWAYS THINK SAFETY

U.S. DEPARTMENT OF THE INTERIOR
BUREAU OF RECLAMATION
1695, NAVAJO-GALLUP WATER SUPPLY PROJECT, NM
NEW MEXICO

CUUTER LATERAL - REACH 21
BOOSTER PLANT

Draft
For Review Only
Not For Distribution

DESIGNED	DENNIS O'DONNELL
DRAWN	DENNIS O'DONNELL
CHECKED	ERIC MENDLIN
TECH. APPR.	
APPROVED PEER REVIEWER	
DENVER, CO	2025-06-25

ELECTRICAL INSTALLATION

BOOSTER PLANT ELEVATION VIEW

1695-D-62389

SHEET 1

LAST SAVED DATE
2025-06-10
LAST SAVED BY
DODONNELL

CAD SYSTEM
AutoCAD 24.2S (LMS TECH)
CAD FILENAME
1695-D-62389_BOOSTER ELEV.DWG

CABLE AND CONDUIT SCHEDULE

CONDUIT NUMBER	CONDUIT SIZE -TYPE	CONDUCTORS	PURPOSE	ORIGIN	DESTINATION	NOTES
1	3/4" - PVC SCH 80	2/C 12 AWG + 12 AWG-G (NOTE 13)	3/4 HP Tank Mixer	PNL-900-01	TANK 3A MIXER	DIRECT BURY; TRANSITION TO RMC PRIOR TO VERTICAL BEND
2	3/4" - PVC SCH 80	2/C 10 AWG + 10 AWG-G (NOTE 13)	3/4 HP Tank Mixer	PNL-900-01	TANK 3B MIXER	DIRECT BURY; TRANSITION TO RMC PRIOR TO VERTICAL BEND; CABLE UPSIZED TO ACCOUNT FOR VOLTAGE DROP

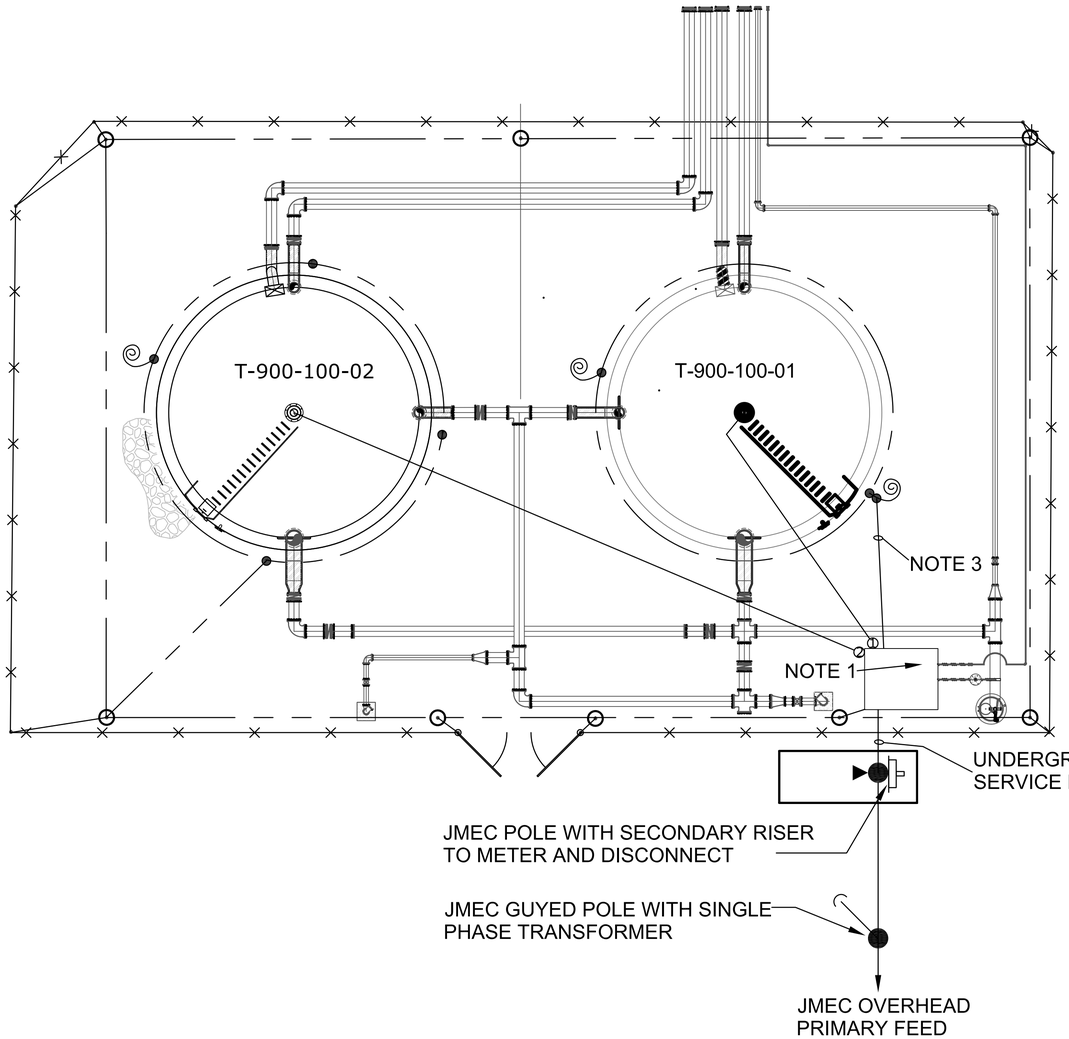

240/120V Panel: PNL-900-01

SUPPLY FROM: JMEC underground service lateral
MOUNTING: WALL
ENCLOSURE: NEMA 12
BUSSING: COPPER
VOLTS: 240/120
PHASES: 1
WIRES: 3
ADDITIONAL FEATURES:
A.I.C. RATING: 10,000
MAINS TYPE: MCB
MCB TRIP RATING: 65A
MAIN BUS RATING: 600V, 250A

PROJECT: NGWSP - Reach 21 - Tank 3 Site

CKT	CIRCUIT DESCRIPTION	TRIP	POLES	A				B		POLES	TRIP	CIRCUIT DESCRIPTION	CKT
1	Heater	20	2	900	500					1	20	Lights	2
3		-	-					900	360	1	20	Outside GFCI	4
5	PLC-900-01	20	1	1000	287.5					2	15	Tank 3A Mixer	6
7	ACP-900-01	20	1					600	287.5	-	-	-	8
9	SPARE	20	-	-	1000					1	20	Heat trace B	10
11	Heat trace A	20	1					1000	360	1	20	Indoor receptacles	12
13	Tank 3B Mixer	15	2	287.5									14
15	-	-	-					287.5					16
17													18
			TOTAL LOAD:	3975 VA				3795 VA					
			TOTAL AMP:	33 A				32 A					

LEGEND:

LOAD CLASSIFICATION	CONNECTED LOAD	DEMAND FACTOR	ESTIMATED DEMAND	PANEL TOTALS
Largest motor	700	25%	175	
Non-coincedental loads (add receptacles;	-430	100%	-430	TOTAL CONN. LOAD: 7770 VA
Future (25% of connected load)	7770 VA	25%	1942.5	TOTAL EST. DEMAND: 9458 VA
				TOTAL CONN.: 65 A
				TOTAL EST.: 79 A

NOTES:
- This panel exists in a shelter onsite.
- Existing loads are assumed. New tank loads include mixers and heat trace B.
- Main breaker size must be verified. Replace main breaker if found to be insufficently sized
- Confirm branch breaker sizes and ratings before installation. Replace improperly sized and rated breakers per NEC.

EQUIPMENT

- GROUND CABLE BURIED IN EARTH
- GROUND CABLE EXPOSED
- WELDED OR BOLTED GROUND CONNECTION
- GROUND ROD
- SITE FENCING

EXPLANATION

DEVICE	LOCATION	DESCRIPTION
T-900-100-01	TANK 3 SITE	EXISTING TANK 3A
T-900-100-02	TANK 3 SITE	TANK 3B (TO BE CONSTRUCTED)
PLC-900-01	TANK 3 SITE	PROGRAMMABLE LOGIC CONTROLLER
ACP-900-01	TANK 3 SITE	CHLORINE ANALYZER

NOTES

1. Equipment shelter houses PNL-900-01.
2. Verify PNL-900-01 main circuit breaker is sized and rated appropriately prior to installation.
3. This is a direct-buried grounding electrode conductor, 4/0 AWG copper wire from PNL-900-01 ground bus to pigtail connected to tank site grounding electrode system.
4. Instrumentation such as transmitters and level indicators not shown.
5. Vaults, and boxes not shown.
6. Grounding system designs likely must comply with manufacturer warranty restrictions and conditions. Verify such restrictions and conditions prior to construction.
7. Grounding system conductors are stranded bare copper.
8. All embedded ground terminations to be performed using caldwell, thermoweld, or an equivalent exothermic process.
9. Location of ground cable terminations to be determined by contractor.
10. Grounding layout show typical location of grounding equipment.
11. Connect mechanical equipment, electrical equipment, conducting surfaces and all other conductive structures and equipment to ground.
12. Grounding scheme shows new grounding for tank 3B (T-900-100-02) and the new fencing. Tank 3A (T-900-100-01) and existing fencing are grounded.
13. Confirm if the mixers requires the use of a neutral prior to installation.
14. Existing Tank 3A cable buried outdoors shown on Tank 3 Support Facility Electrical Plan, FIO Drawing 900-E-2001.

REFERENCE DRAWINGS

TANK 3 SUPPLY FACILITY - ELECTRICAL PLAN	900-E-2001
TANK 3 SUPPLY FACILITY - PROCESS PLAN	900-D-2001
REACH 21 BOOSTER PLANT SINGLE-LINE DIAGRAM - ELECTRICAL INSTALLATION	1695-D-62388
REACH 21 BOOSTER PLANT ELEVATION VIEW - ELECTRICAL INSTALLATION	1695-D-62389

BUREAU OF RECLAMATION

ALWAYS THINK SAFETY

U.S. DEPARTMENT OF THE INTERIOR
BUREAU OF RECLAMATION
1695, NAVAJO-GALLUP WATER SUPPLY PROJECT, NM
NEW MEXICO

CUTTER LATERAL - REACH 21
TANK 3 SITE

Preliminary Design Only
Draft
Not For Distribution

DESIGNED	DENNIS O'DONNEL
DRAWN	DENNIS O'DONNELL
CHECKED	ERIC MENDLIN
TECH. APPR.	
APPROVED PEER REVIEWER	
DENVER,CO	2025-06-25

ELECTRICAL INSTALLATION

TANK 3 SITE & GROUND PLAN; PANEL & CABLE AND CONDUIT SCHEDULE

1695-D-62390

SHEET 1

LAST SAVED DATE
2025-05-19
LAST SAVED BY
DODONNELL

CAD SYSTEM
AutoCAD 24.2S (LMS TECH)
CAD FILENAME
1695-D-62390_TANK 3 SITE.DWG

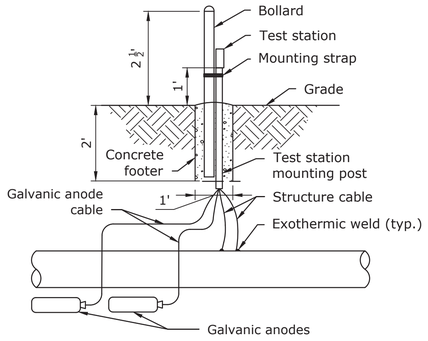

ANODE TEST STATION - MULTIPLE ANODES

NOT TO SCALE

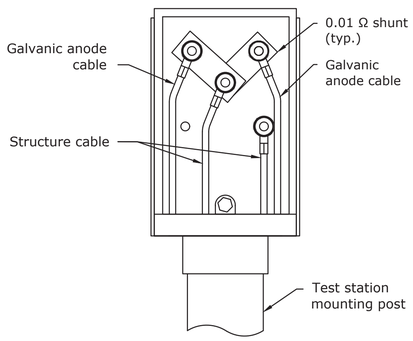

TEST BOARD - MULTIPLE ANODES

NOT TO SCALE

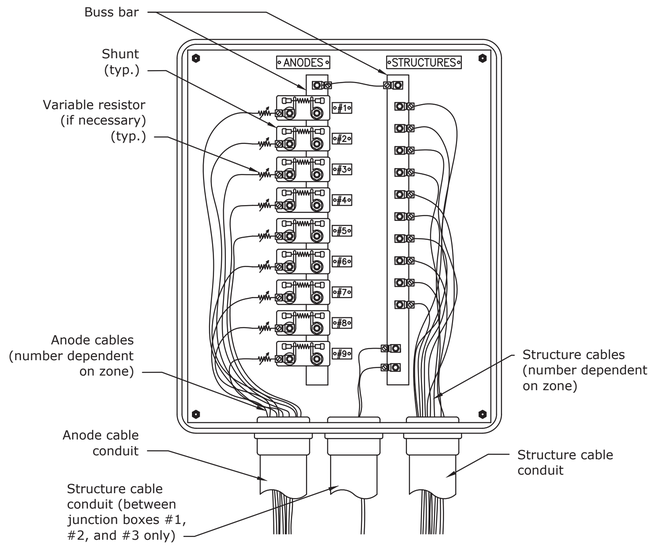

ANODE JUNCTION BOX DETAIL

NOT TO SCALE

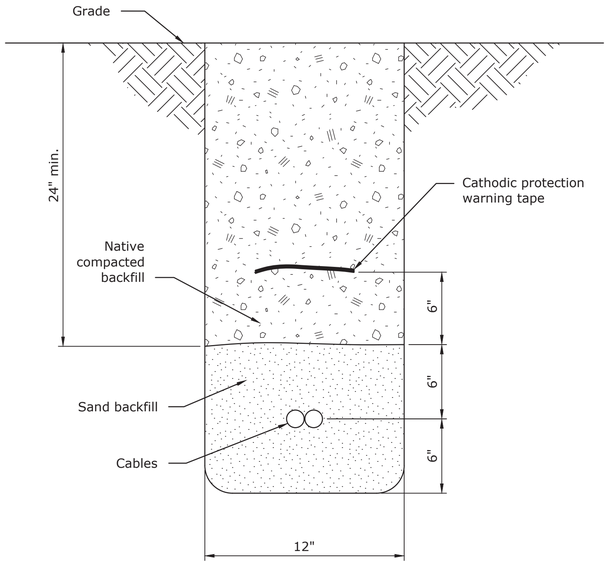

CABLE TRENCH DETAIL

NOT TO SCALE

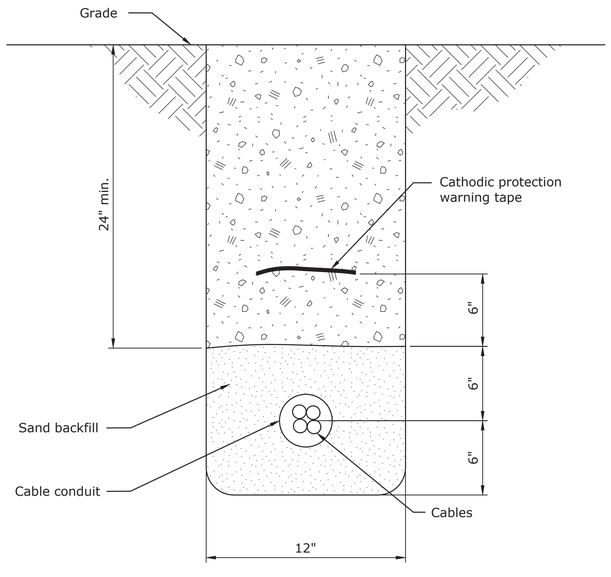

CABLE CONDUIT TRENCH DETAIL

NOT TO SCALE

MATERIAL EXPLANATION	
Item	Description
Bollard	3" diameter steel post with capped top, coated NTUA Blue
Test station	Cast aluminum with 5 terminals minimum, pole mountable
Anode junction box	NEMA 3R junction box, 20 terminals, 18"H x 18"W x 6"D
Mounting post	2" diameter galvanized steel post
Structure cable	#12 AWG or larger stranded copper with HMWPE sheathing (black)
Galvanic anode cable	Factory-installed #12 AWG or larger stranded copper with HMWPE sheathing (red if available)
Galvanic anode	UltraMag high potential magnesium anodes (20-lb)
Buried Structure Cable Conduit	1.5" diameter minimum, schedule 80 PVC (bonding between anode junction boxes)
Buried Galvanic Anode and Structure Cable Conduit	2" diameter minimum, schedule 80 PVC (for cables from existing test stations to anode junction boxes)

NOTES

1. Place anodes at the same depth as the bottom of the structure.
2. One shunt for each anode installed in Booster Plant yard.
3. Anode junction box details listed in specification Section 26 42 00.
4. Number of anodes at each structure in accordance with specification Section 26 42 11.
5. Anodes are to be installed a minimum distance of 25 feet from the structure.
6. Minimum of one anode length from non-metallic pipe.
7. Anode cable conduit and structure cable conduit shall be PVC below grade but may be galvanized steel for conduit located above grade.
8. Trench detail to be used for all horizontal segments of buried cable and conduit.
9. Temporary strap required during installation in concrete footer.
10. Cable identification for all cables terminating in test stations. Cover cable I.D. with clear heat-shrink tubing. See detail in sheet (62392).
11. Cathodic protection system components are drawn larger than actual for visualization.

REFERENCE DRAWINGS

BOND DETAILS AND ISOLATION JOINT FLANGE KITS.....1695-D-62392
TANK SITE YARD PIPE CATHODIC PROTECTION MODIFICATION.....1695-D-62394
TANK SITE YARD PIPE CATHODIC PROTECTION MODIFICATION DETAILS.....1695-D-62395

BUREAU OF RECLAMATION

ALWAYS THINK SAFETY

U.S. DEPARTMENT OF THE INTERIOR
BUREAU OF RECLAMATION

NAVAJO-GALLUP WATER SUPPLY PROJECT
NEW MEXICO

CUTTER LATERAL - REACH 21

BOOSTER PLANT

Draft
Not For Construction
For Distribution

D. Little
DESIGNED
D. Little
DRAWN
M. Jermyn
CHECKED
D. Little
TECH. APPR.
J. Torrey
APPROVED
ADMIN APPROVAL - Ph.D., P.E.

DENVER, CO 2025-05-19

CATHODIC PROTECTION

TEST STATION, ANODE JUNCTION BOX, CABLE TRENCH DETAILS

1695-D-62391

SHEET 1 of 5

LAST SAVED DATE
2025-05-16
LAST SAVED BY
DLITTLE

CAD SYSTEM
AutoCAD 24.2S (LMS TECH)
CAD FILENAME
62391-D-001 CATHODIC PROTECTION
10^2 x 18" 62391-D-001 DETAILS_5_14_25.DWG

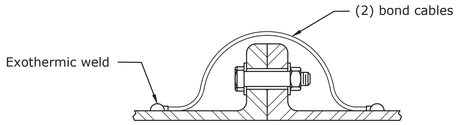

FLANGED JOINT (NON-ISOLATING)

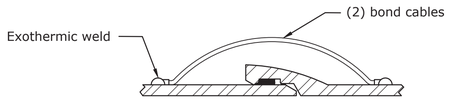

PUSH-ON JOINT

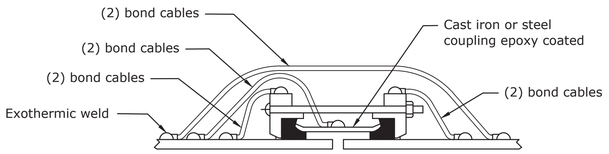

NOTE: Bond each individual metallic component.

FLEXIBLE COUPLING (MULTIPLE COMPONENT COUPLING)

JUMPER BOND INSTALLATION
NOT TO SCALE

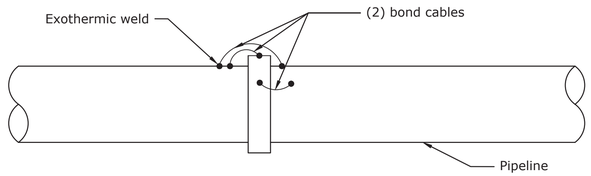

VICTAULIC BOND DETAIL
NOT TO SCALE

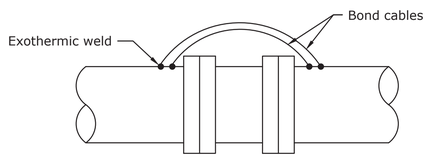

ISOLATED APPURTENANCE BOND DETAIL
NOT TO SCALE

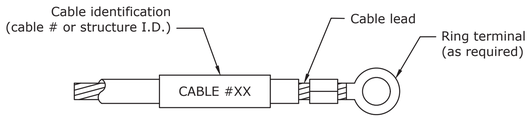

CABLE IDENTIFICATION
NOT TO SCALE

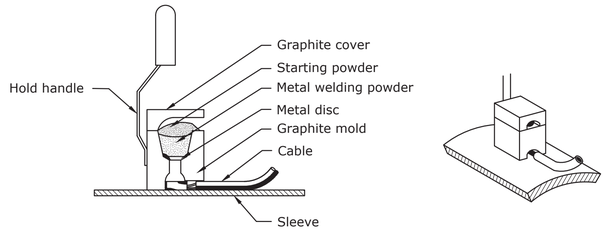

STEP 1.	Grind structure connection area (3"x3") to bare shiny metal and clean.	
STEP 2.	Strip insulation from wire. Attach sleeve.	
STEP 3.	Hold mold firmly with opening away from operator & ignite with flint gun.	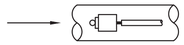
STEP 4.	Remove slag from connection and peen weld for soundness.	
STEP 5.	Cover connection and exposed structure surface with a bituminuus coating compound.	

NOTE: Procedure shown above is to be used as a general guide only.
Consult manufacturer's literature for specific installation instructions.

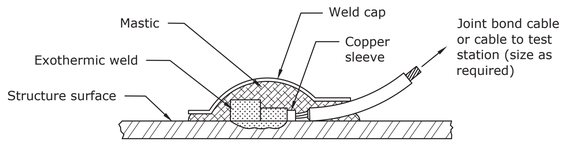

EXOTHERMIC WELDING
NOT TO SCALE

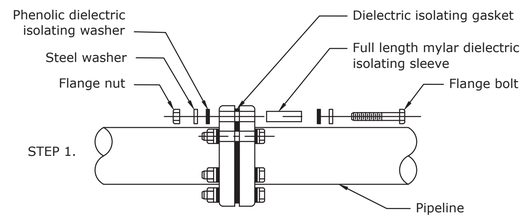

IJFK - DIELECTRIC ISOLATING JOINT FLANGE KIT
NOT TO SCALE

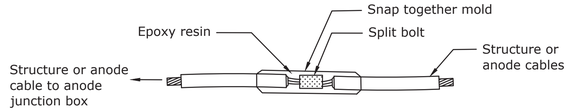

CABLE IN-LINE SPLICE
NOT TO SCALE

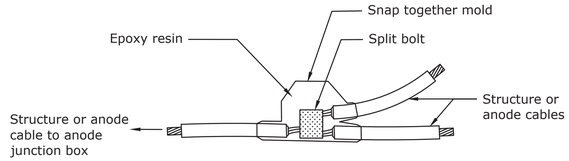

CABLE WYE SPLICE
NOT TO SCALE

MATERIAL EXPLANATION	
Item	Description
Bond cable	#6 AWG or larger stranded copper with HMWPE sheathing (2 per joint)
Structure cable	#12 AWG or larger stranded copper with HMWPE sheathing (black)
Galvanic anode cable	#12 AWG or larger stranded copper with HMWPE sheathing (red if available)
Exothermic weld supplies	CS-32 Type, M-102 Mold, 15CP Weld Metal (for steel), cast iron requires different supplies, manufactured by thermOweld®, or equal
Weld cap	Prefabricated, integrated primer patch to repair coating surrounding exothermic weld, manufactured by thermOweld®, or equal
In-line splice kit	Scotchcast™ 82A Series, single conductor, snap together mold, electrical insulating epoxy resin, manufactured by 3M, or equal
Wye splice kit	Scotchcast™ 82-B1 Series, multiple conductors, snap together mold, electrical insulating epoxy resin, manufactured by 3M, or equal
Isolation Joint Flange Kit (IJFK)	Full face isolating gasket, isolation bolt sleeves, and one or more isolating washers per bolt

NOTES

1. Any non-welded, non-isolating joints, valves, and fittings require bonding to achieve electrical continuity.
2. Do not install joint bonds on welded joints and/or joints called out to be electrically isolated.
3. Bonding cables should be exothermically welded to the pipe near the crown.
4. Cover the exposed copper cable, weld nugget, and ferrous material at the weld with an approved dielectric coating or cap.
5. Cable identification for all cables terminating in test station and anode junction boxes. Cover cable I.D. with clear heat-shrink tubing.
6. Splice anode cables in existing test stations to anode header cable and run through conduit to appropriate anode junction box (62394 and 62395).
7. Splice structure cables in existing test stations to structure header cable and run through conduit to appropriate anode junction box (62394 and 62395).
8. Cathodic protection system components are drawn larger than actual for visualization.

REFERENCE DRAWINGS

TEST STATION, ANODE JUNCTION BOX, CABLE TRENCH DETAILS.....1695-D-62391
GACP SYSTEM - TANK SECTION AND PROFILE.....1695-D-62393
TANK SITE YARD PIPE CATHODIC PROTECTION MODIFICATION.....1695-D-62394
TANK SITE YARD PIPE CATHODIC PROTECTION MODIFICATION DETAILS.....1695-D-62395

BUREAU OF RECLAMATION

ALWAYS THINK SAFETY

U.S. DEPARTMENT OF THE INTERIOR
BUREAU OF RECLAMATION

NAVAJO-GALLUP WATER SUPPLY PROJECT
NEW MEXICO

CUTTER LATERAL - REACH 21
BOOSTER PLANT

For Review Only
Not For Bid or Distribution
Draft

D. Little	DESIGNED
D. Little	DRAWN
M. Jermyn	CHECKED
D. Little	TECH. APPR.
J. Torrey	APPROVED ADMIN APPROVAL - Ph.D., P.E.
DENVER, CO	2025-05-19

CATHODIC PROTECTION

BOND DETAILS, ISOLATION JOINT FLANGE KITS

1695-D-62392

SHEET 2 of 5

LAST SAVED DATE
2025-05-16
LAST SAVED BY
DLITTLE

CAD SYSTEM
AutoCAD 24.2S (LMS TECH)
CAD FILENAME
1695-62392 CATHODIC PROTECTION BOND AND IJFK DETAILS 5_16_25.DWG

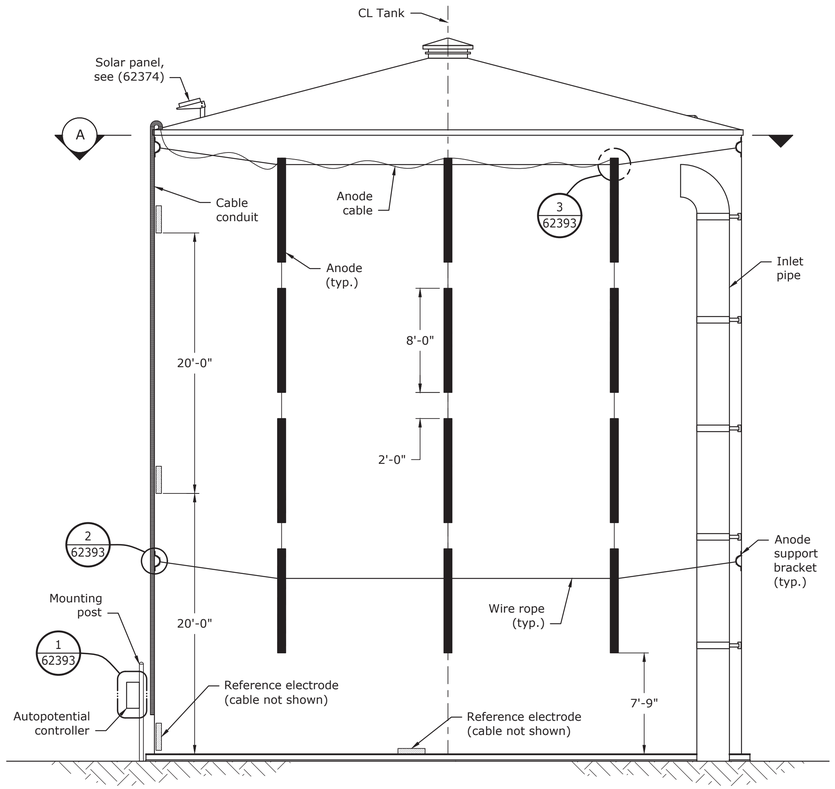

PROFILE - 45' DIAMETER WELDED STEEL STORAGE TANK

NOT TO SCALE

SOME TANK FEATURES NOT SHOWN (SEE 62374)

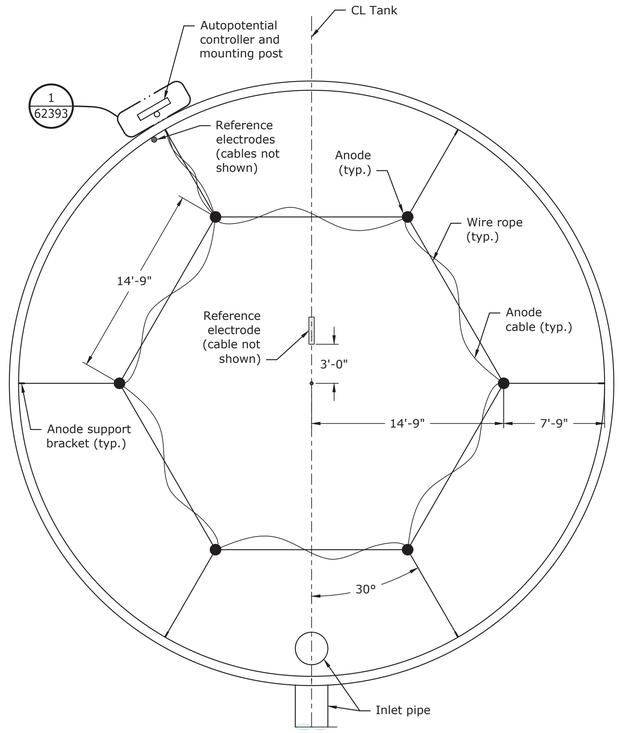

A SECTION - 45' DIAMETER TANK

NOT TO SCALE

SOME TANK FEATURES NOT SHOWN (SEE 62374)

MATERIAL EXPLANATION	
Item	Description
Anodes	2" diameter high potential magnesium anode
Anode cable	Factory-installed #12 AWG or larger stranded copper with HMWPE sheathing
Anode support brackets	Stainless steel weld-on tie-down ring
Wire rope	$\frac{1}{4}$" diameter coated stranded stainless steel
D-ring	Stainless steel
Clamp and thimble	Stainless steel, two clamps and one thimble per connection, sized for wire rope
Dielectric tape wrap	High dielectric adhesive tape suitable for immersion service
Anode and reference electrode cable conduit	2" diameter minimum galvanized steel
Solar panel	10W 6V solar panel, glass reinforced polyester, with mounting bracket, and extended solar connection cable
Solar power cable conduit	1.5" diameter minimum galvanized steel
Mounting post	3" diameter steel post (galvanized or coated NTUA blue)
Autopotential controller	Automatic potential magnesium anode controller for above-ground storage tanks, pole mountable, Poly Carbonate enclosure, solar powered
Structure cable	#12 AWG or larger stranded copper with HMWPE sheathing
Reference electrode	Permanent copper-copper sulfate for use in immersion service with #14 AWG cable with HMWPE sheathing

NOTES

1. During tank fabrication, weld anode support brackets to tank wall for wire rope anchorage.
2. Anode array contains 6 anode strings (4 anodes per string) evenly spaced in a 14'9" radius ring supported by wire rope.
3. Install anode cables from anodes to cable conduit with sufficient length and without stress; loosely wrap around wire rope for support where appropriate.
4. Install reference electrode cables from reference electrodes to cable conduit with sufficient length and without stress; loosely wrap around wire rope for support where appropriate.
5. Install the solar panel using bracket supports on roof of tank as needed to maintain structural integrity.
6. Position the solar panel such that the connection cable reaches the autopotential controller and such that the solar panel receives sufficient sunlight for operation.
7. Autopotential controller mounted directly to bollard.
8. Cable identification for all cables terminating in controller. Cover cable I.D. with clear heat-shrink tubing. See detail in sheet (62392).
9. Install cathodic protection system components in accordance with specification Section 26 42 15.
10. Cathodic protection system components are drawn larger than actual for visualization purposes.

REFERENCE DRAWINGS

STEEL TANK PLAN AND SECTIONS.....1695-D-62374
BOND DETAILS, ISOLATION JOINT FLANGE KITS.....1695-D-62392

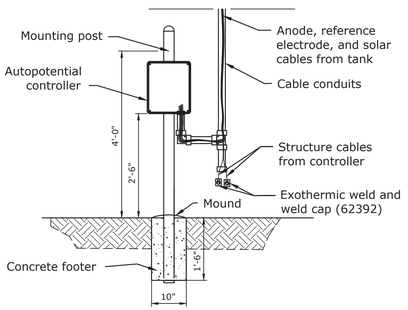

1 DETAIL - AUTOPOTENTIAL CONTROLLER AND TEST STATION

NOT TO SCALE

TANK NOT SHOWN

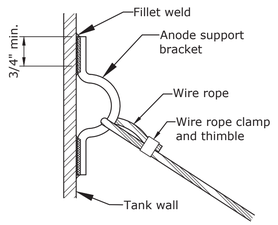

2 DETAIL - ANODE SUPPORT BRACKET (TYP.)

NOT TO SCALE

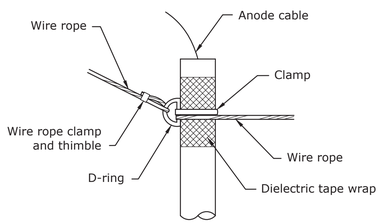

3 DETAIL - ANODE ROPE SUPPORT (TYP.)

NOT TO SCALE

— BUREAU OF —
RECLAMATION

ALWAYS THINK SAFETY

U.S. DEPARTMENT OF THE INTERIOR
BUREAU OF RECLAMATION
NAVAJO-GALLUP WATER SUPPLY PROJECT
NEW MEXICO

CUTTER LATERAL - REACH 21

REGULATING TANK #3

For Reference Only
Draft
Not For Distribution

D. Little — DESIGNED
D. Little — DRAWN
M. Jermyn — CHECKED
D. Little — TECH. APPR.
J. Torrey — APPROVED
ADMIN APPROVAL - Ph.D., P.E.

DENVER, CO 2025-05-19

CATHODIC PROTECTION

GACP SYSTEM
TANK SECTION AND PROFILE

1695-D-62393

SHEET 3 of 5

LAST SAVED DATE
2025-05-16
LAST SAVED BY
DLITTLE

CAD SYSTEM
AutoCAD 2025 (LMS TECH)
CAD FILENAME
1695-D-62393 CATHODIC PROTECTION GACP TANK SECTION AND PROFILE 5-16-25.DWG

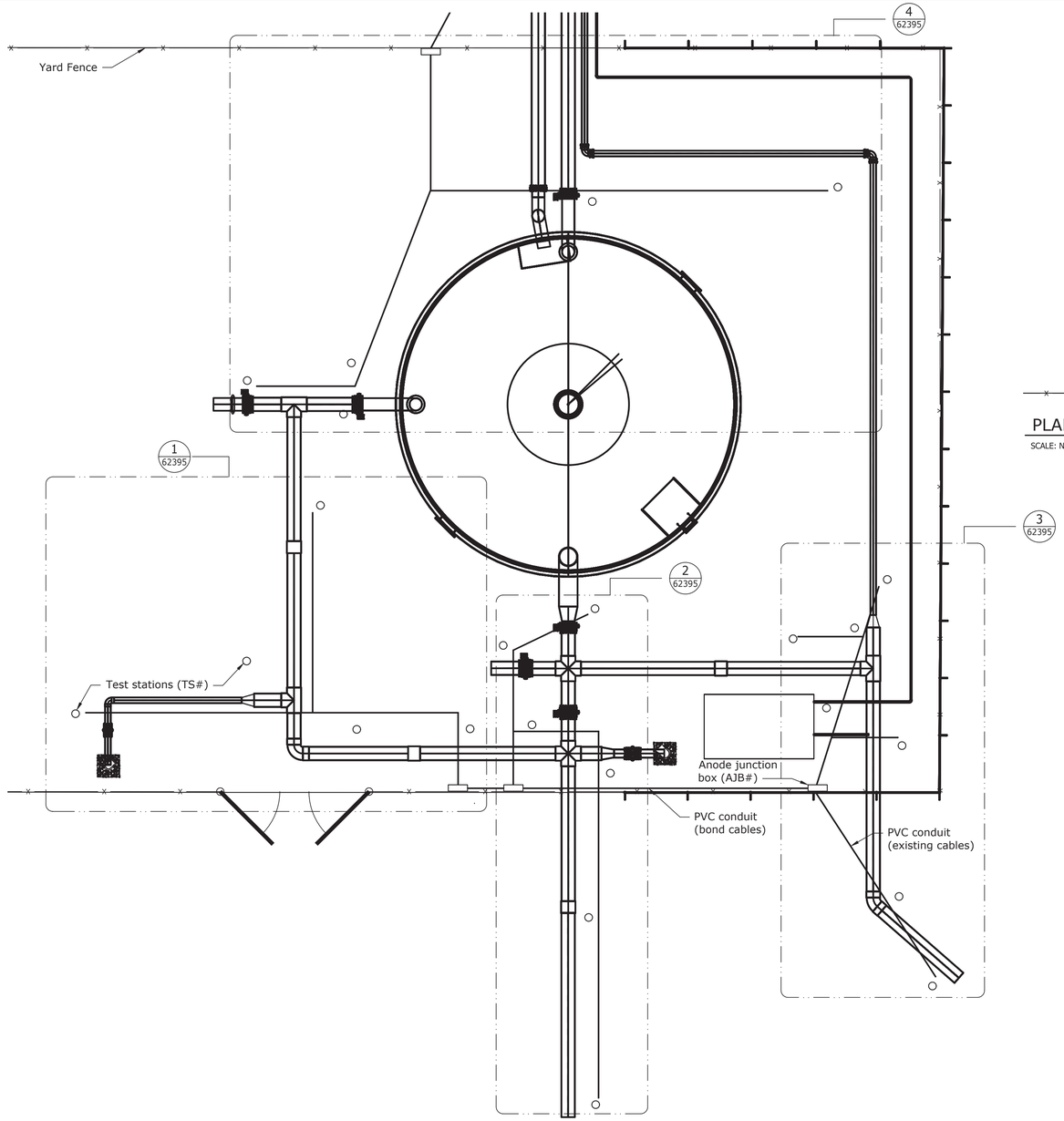

PLAN - REGULATING TANK SITE 3 - EXISTING TEST STATIONS

SCALE: NOT TO SCALE

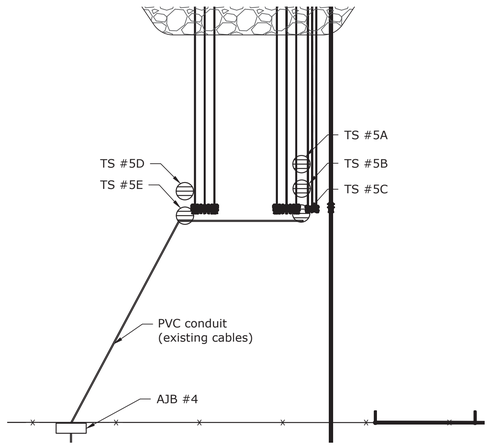

PLAN - REGULATING TANK SITE 3 - EXISTING DRAIN TEST STATIONS

SCALE: NOT TO SCALE

MATERIAL EXPLANATION	
Item	Description
Test station (TS#)	Big Fink, PVC with 5 terminals minimum, pole mountable (existing)
Structure cable	#12 AWG or larger stranded copper with HMWPE sheathing (black)
Galvanic anode cable	#12 AWG or larger stranded copper with HMWPE sheathing (red if available)
Anode junction box (AJB#)	NEMA 3R junction box, 20 terminals, 18"H x 18"W x 6"D
Buried Structure Cable Conduit	1.5" diameter minimum, schedule 80 PVC (bonding between anode junction boxes)
Buried Galvanic Anode and Structure Cable Conduit	2" diameter minimum, schedule 80 PVC (for cables from existing test stations to anode junction boxes)

TEST STATION RE-WIRING							
Anode junction box #	Test Station #						
AJB #1	TS #1A	TS #1B	TS #1C	TS #1D	TS #1E		
AJB #2	TS #2A	TS #2B	TS #2C	TS #2D	TS #2E	TS #2F	
AJB #3	TS #3A	TS #3B	TS #3C	TS #3D	TS #3E	TS #3F	TS #3G
AJB #4	TS #4A	TS #4B	TS #4C	TS #4D	TS #4E	TS #5F	TS #5G

NOTES

1. Anode junction box details listed in specification Section 26 42 00 and see detail in sheet (62392).
2. Splice anode header cable to anode cable(s) in each test station and run to appropriate anode junction box through anode cable header conduit.
   - 2.1. Splice anode cables in TS#5A, TS#5B, and TS#5C to single header cable (renamed TS#5F anode).
   - 2.2. Splice anode cables in TS#5D and TS#5E to single header cable (renamed TS#5G anode).
3. One shunt for each anode header cable installed at each test station.
4. Splice structure header cable to structure cable(s) in each test station and run to appropriate anode junction box through structure cable header conduit.
   - 4.1. Splice structure cables in TS#5A, TS#5B, and TS#5C to single header cable (renamed TS#5F structure).
   - 4.2. Splice structure cables in TS#5D and TS#5E to single header cable (renamed TS#5G structure).
5. Anode cable conduit and structure cable conduit shall be PVC below grade but may be galvanized steel for conduit located above grade.
6. Trench detail to be used for all horizontal segments of buried cable and conduit. See detail in sheet (62392).
7. Cable identification for all cables terminating in test stations. Cover cable I.D. with clear heat-shrink tubing. See detail in sheet (62392).
8. Cathodic protection system components are drawn larger than actual for visualization.

REFERENCE DRAWINGS

TEST STATION, ANODE JUNCTION BOX, CABLE TRENCH DETAILS.....1695-D-62391
BOND DETAILS AND ISOLATION JOINT FLANGE KITS.....1695-D-62392
TANK SITE YARD PIPE CATHODIC PROTECTION MODIFICATION DETAILS.....1695-D-62395

BUREAU OF RECLAMATION

ALWAYS THINK SAFETY

U.S. DEPARTMENT OF THE INTERIOR
BUREAU OF RECLAMATION
NAVAJO-GALLUP WATER SUPPLY PROJECT
NEW MEXICO

CUTTER LATERAL - REACH 21

REGULATING TANK #3

For Internal Use Only
Draft
Not For Distribution

D. Little
DESIGNED
D. Little
DRAWN
M. Jermyn
CHECKED
D. Little
TECH. APPR.
J. Torrey
APPROVED
ADMIN APPROVAL - Ph.D., P.E.

DENVER, CO 2025-05-19

CATHODIC PROTECTION

YARD PIPE CATHODIC PROTECTION MODIFICATION

1695-D-62394

SHEET 4 of 5

LAST SAVED DATE 2025-05-19
LAST SAVED BY DLITTLE

CAD SYSTEM AutoCAD 24.2S (LMS TECH)
CAD FILENAME REG TANK 3B - CATHODIC PROTECTION 5-19-2025.DWG

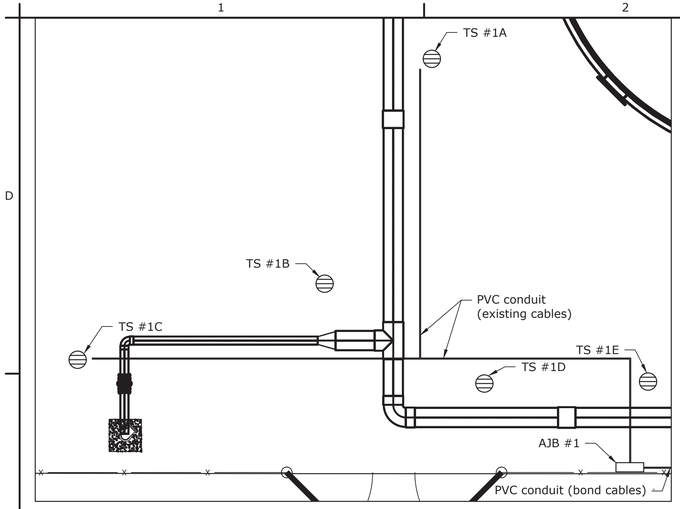

1 DETAIL - ZONE 1
SCALE: NOT TO SCALE

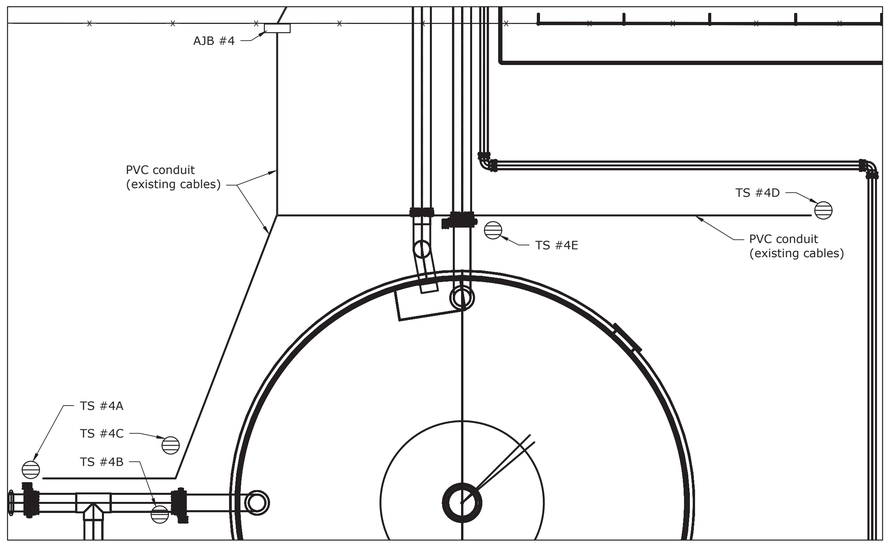

4 DETAIL - ZONE 4
SCALE: NOT TO SCALE

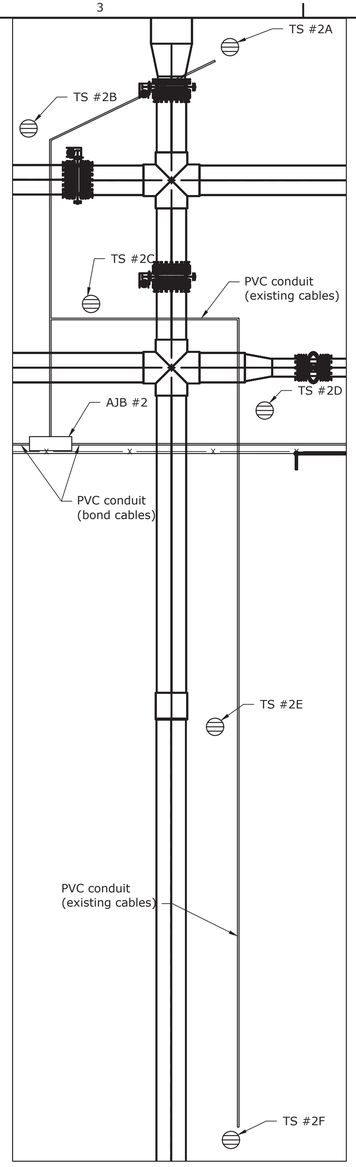

2 DETAIL - ZONE 2
SCALE: NOT TO SCALE

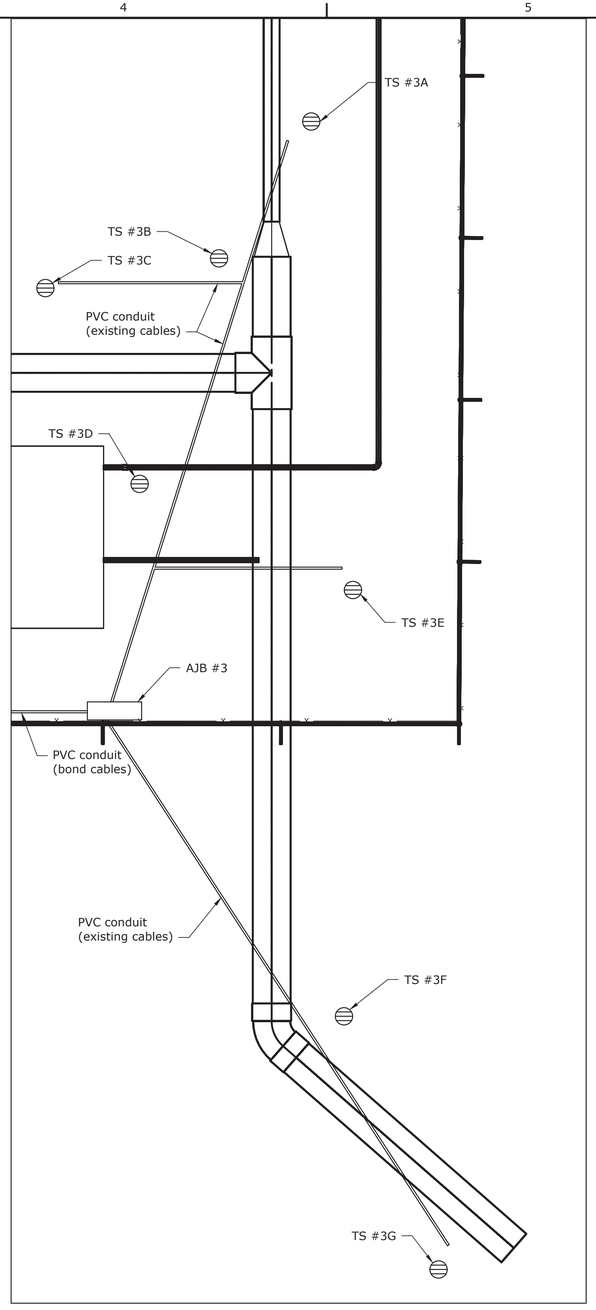

3 DETAIL - ZONE 3
SCALE: NOT TO SCALE

NOTES

1. Anode junction box details listed in specification Section 26 42 00 and see detail in sheet (62392).
2. Splice anode header cable to anode cable(s) in each test station and run to appropriate anode junction box through anode cable header conduit.
3. One shunt for each anode header cable installed at each test station.
4. Splice structure header cable to structure cable(s) in each test station and run to appropriate anode junction box through structure cable header conduit.
5. Anode cable conduit and structure cable conduit shall be PVC below grade but may be galvanized steel for conduit located above grade.
6. Trench detail to be used for all horizontal segments of buried cable and conduit. See detail in sheet (62392).
7. Cable identification for all cables terminating in test stations. Cover cable I.D. with clear heat-shrink tubing. See detail in sheet (62392).
8. Cathodic protection system components are drawn larger than actual for visualization.

REFERENCE DRAWINGS

TEST STATION, ANODE JUNCTION BOX, CABLE TRENCH DETAILS.....1695-D-62391
BOND DETAILS AND ISOLATION JOINT FLANGE KITS.....1695-D-62392
TANK SITE YARD PIPE CATHODIC PROTECTION MODIFICATION.....1695-D-62394

BUREAU OF RECLAMATION

ALWAYS THINK SAFETY

U.S. DEPARTMENT OF THE INTERIOR
BUREAU OF RECLAMATION
NAVAJO-GALLUP WATER SUPPLY PROJECT
NEW MEXICO

CUTTER LATERAL - REACH 21
REGULATING TANK #3

For Internal Use Only
Draft
Not For Distribution

D. Little
DESIGNED
D. Little
DRAWN
M. Jermyn
CHECKED
D. Little
TECH. APPR.
J. Torrey
APPROVED
ADMIN APPROVAL - Ph.D., P.E.

DENVER, CO 2025-05-19

CATHODIC PROTECTION

YARD PIPE CATHODIC PROTECTION MODIFICATION DETAILS

1695-D-62395

SHEET 5 OF 5

LAST SAVED DATE 2025-05-19
LAST SAVED BY DLITTLE

CAD SYSTEM AutoCAD 24.2S (LMS TECH)
CAD FILENAME REG TANK 3B - CATHODIC PROTECTION 5-19-2025.DWG

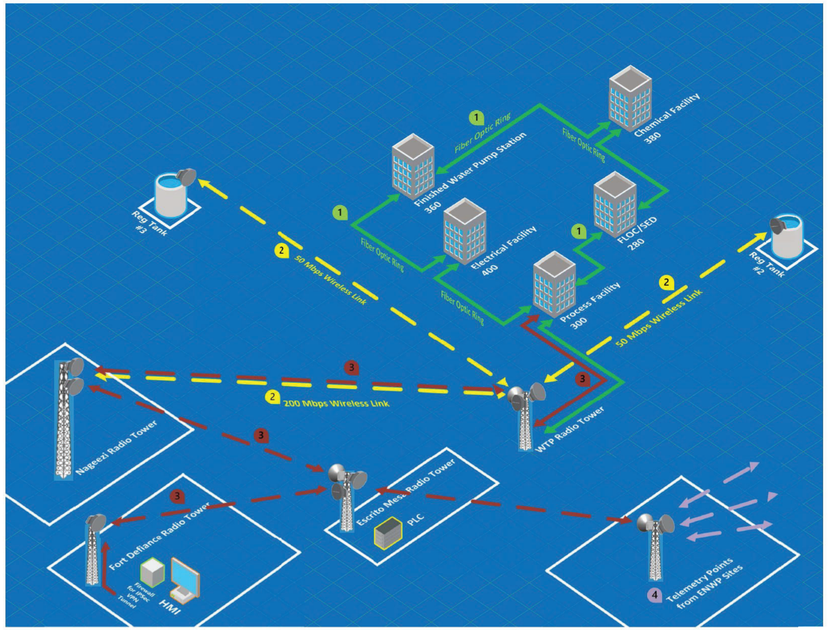

RADIO LINK DETAILS					
LINK	FREQUENCY	TYPE	PURPOSE	DESTINATION/DESCRIPTION	NOTES
1	11 GHZ	LICENSED	SCADA & VOIP	WTP TO NAGEEZI TOWER	CERAGON IP20-C RADIO
3	11GHZ	LICENSED	SCADA	WTP TO REG TANK #3	CERAGON IP20-C RADIO

RADIO LINK SCHEMATIC

MICROWAVE PATH KEY PLAN

RADIO SYSTEM ANTENNA LOCATION DETAILS							
	LOCATION	LATTITUDE	LONGITUDE	ANTENNA PURPOSE	ANTENNA TYPE	ANTENNA HEIGHT	NOTES
A	REG TANK #3	36°24'25.77"N	107°50'19.48"W	SCADA LINK TO WTP PLANT	RADOME DISH	50 FEET	ANTENNA PLACEMENT ON TOP OF WATER TANK
C	WTP SITE TOWER	36°24'38.06"N	107°47'33.03"W	SCADA LINK TO NAGEEZI TOWER AND VOIP DATA	RADOME DISH	70 FEET	
D	NAGEEZI TOWER	36°15'45.85"N	107°44'43.35"W	SCADA LINK TO WTP PLANT	RADOME DISH	150 FEET	

RADIO SYSTEM ANTENNA LOCATIONS

GENERAL NOTES

1. THE INFORMATION SHOWN HERE IS SCHEMATIC IN NATURE AND IS INTENDED TO SHOW GENERAL LINK CONCEPTS ONLY. SEE REFERENCED DRAWINGS FOR ACTUAL EQUIPMENT LOCATIONS.
2. FIBER OPTIC RING
3. WIRELESS LINKS OVER CERAGON IP20-C RADIOS OPERATING AT 11GHZ

   - FROM WTP RADIO TOWER TO REG TANK #3 SCADA TELEMETRY IS CARRIED VIA MICROWAVE

   - FROM WTP TO NAGEEZI RADIO TOWER BOTH SCADA TELEMETRY AND VOIP TRAFFIC WILL BE CARRIED VIA MICROWAVE

   - FROM FORT DEFIANCE TO WTP THROUGH ESCRITO MESA TOWER TELEMETRY DATA AND VOIP DATA WILL BE CARRIED OVERIPSEC VPN TUNNEL

   - FROM ESCRITO MESA TO WTP THROUGH NAGEEZI TOWER TELEMETRY DATA WILL BE CARRIED VIA MICROWAVE

   - BANDWIDTH BETWEEN NAGEEZI TOWER AND WTP WILL BE 200MBPS

   - BANDWIDTH BETWEEN REG TANK #3 TO WTP WILL BE 50MBPS
4. VOIP TRAFFIC AND TELEMETRY DATA TO DATA CONCENTRATOR IN WTP OVER IPSEC VPN TUNNEL

RECLAMATION
Managing Water in the West

ch2m

VERIFY SCALE
BAR IS ONE INCH ON ORIGINAL DRAWING.
0 1"

FOR INFORMATION ONLY

ALWAYS THINK SAFETY

U.S. DEPARTMENT OF THE INTERIOR
BUREAU OF RECLAMATION
NAVAJO-GALLUP WATER SUPPLY PROJECT
NEW MEXICO

CUTTER LATERAL - REACH 21

WATER TREATMENT PLANT

NO.	DATE	REVISION	BY	APVD
0	02/13/2019	ISSUED FOR CONSTRUCTION	MK	JP

T TRUDEL
DESIGNED
S FLASKA
DRAWN
A ELLIS
CHECKED
J LANDMAN
TECH. APPR.
J PETERSON
APPROVED
ADMIN APPROVAL -

FARMINGTON, NM FEBRUARY 2019

I&C

TYPICAL
RADIO SYSTEM CONCEPTS

080-I-3008

SHEET 141 OF 405

DATE PLOTTED
2/12/2019
TIME PLOTTED
10:48:33 AM

CAD SYSTEM
CAD FILENAME
080-I-3008_682853.dgn

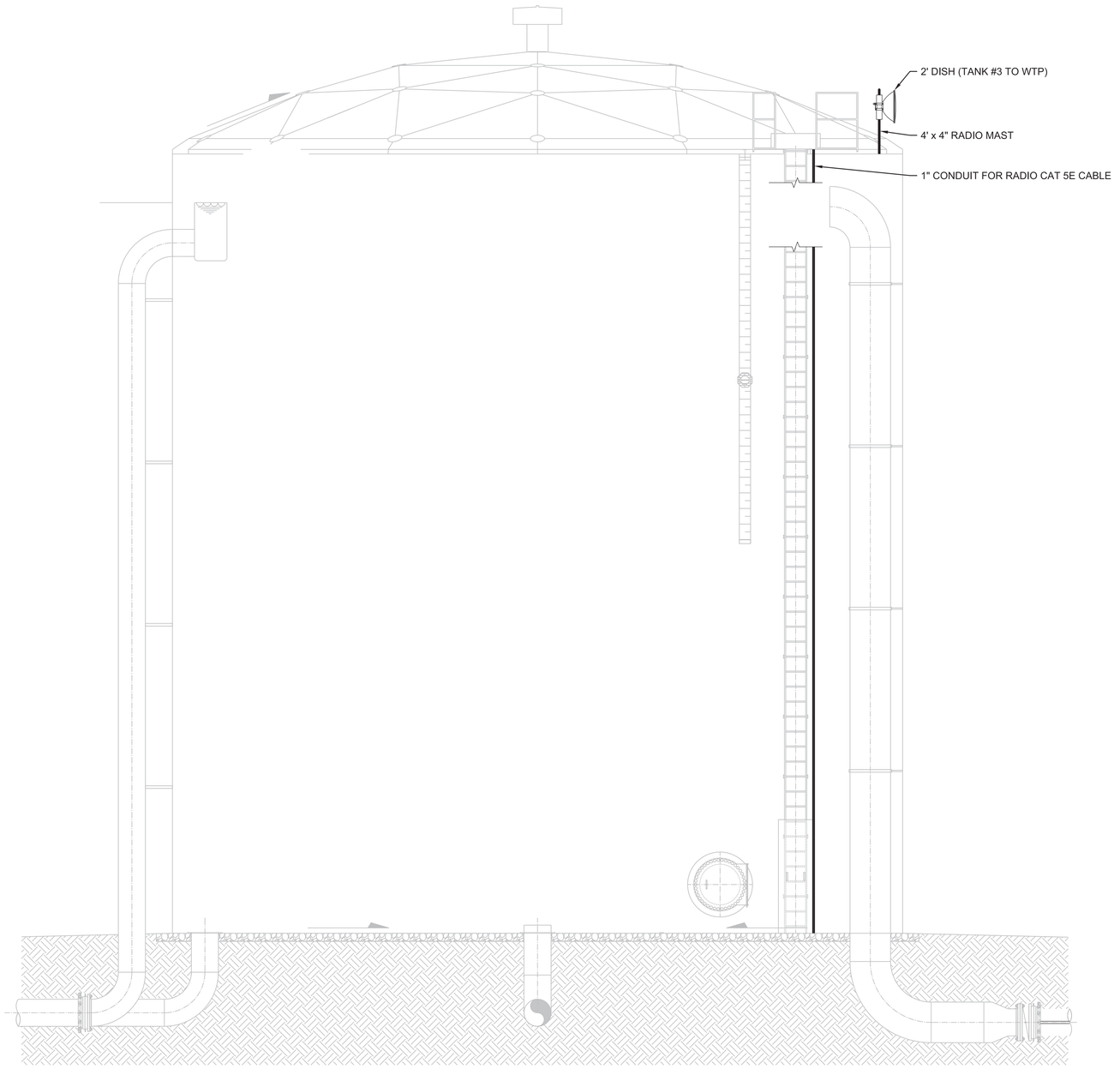

TANK SITE NO. 3

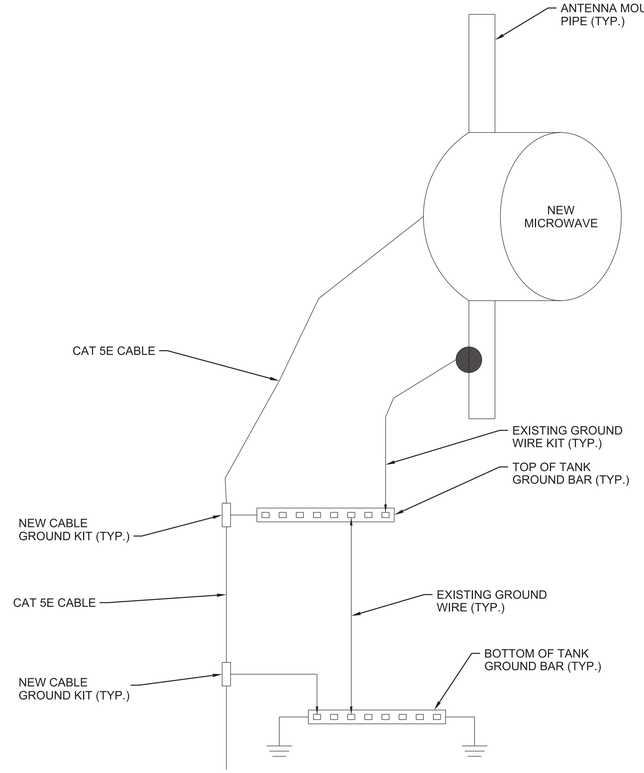

TYPICAL GROUNDING DETAILS
(NTS)

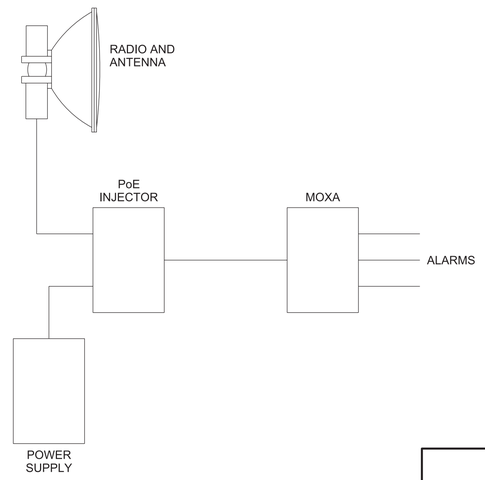

SINGLE LINE
(NTS)

THIS DOCUMENT IS AN ELECTRONIC COPY. ORIGINAL DOCUMENT WAS ISSUED AND SEALED ON 02/13/2019. THE ORIGINAL DOCUMENT IS STORED AT THE OFFICES OF CH2M HILL CONSTRUCTORS, INC. ENGLEWOOD, CO.

RECLAMATION
Managing Water in the West

ch2m

VERIFY SCALE
BAR IS ONE INCH ON ORIGINAL DRAWING.
0 1"

FOR INFORMATION ONLY

ALWAYS THINK SAFETY

U.S. DEPARTMENT OF THE INTERIOR
BUREAU OF RECLAMATION
NAVAJO-GALLUP WATER SUPPLY PROJECT
NEW MEXICO

CUTTER LATERAL - REACH 21

WATER TREATMENT PLANT

RECORD DRAWINGS

CH2M HILL CONSTRUCTORS, INC.
Revisions Drawn By

Date APRIL 2021

THESE RECORD DRAWINGS HAVE BEEN PREPARED, IN PART, ON THE BASIS OF INFORMATION COMPILED BY OTHERS. THEY ARE NOT INTENDED TO REPRESENT IN DETAIL THE EXACT LOCATION, TYPE OF COMPONENT NOR MANNER OF CONSTRUCTION. THE ENGINEER WILL NOT BE RESPONSIBLE FOR ANY ERRORS OR OMISSIONS WHICH HAVE BEEN INCORPORATED INTO THE RECORD DRAWINGS.

NO.	DATE	REVISION	BY	APVD

T TRUDEL	DESIGNED
S FLASKA	DRAWN
A ELLIS	CHECKED
J LANDMAN	TECH. APPR.
J PETERSON	APPROVED
	ADMIN APPROVAL -

FARMINGTON, NM — FEBRUARY 2019

I&C

RADIO EQUIPMENT INSTALLATION DETAILS

080-I-3010

SHEET 143 OF 405

1695-D-61260-MF-2

DATE PLOTTED 3/27/2021
TIME PLOTTED 11:17:22 AM

CAD SYSTEM
CAD FILENAME 080-I-3010_682853.dgn

SAN JUAN COUNTY, NEW MEXICO
SEC–18, T–25–N, R–9–W
NAVAJO TRIBAL TRUST

REACH 21 WATERLINE EASEMENT

SEE SHT. 850-C-2010 FOR CONTINUATION

4" DR18 PVC

4" FLUSH DRAIN LINE MUST REMAIN WITHIN REACH 21 AND PHASE 3 R-O-W'S

4" 22.5° MJ BEND, DI

EXISTING PHASE 3 ISOLATION VALVE STA. 41+20, 1142 FT.

EXISTING 22" HDPE DR17 IPS

40' ENWP PHASE 3 WATERLINE EASEMENT

Navajo Tribal Trust

6897

6896

6895

4" 45° MJ BEND, DI

4" DR18 PVC

4" 45° MJ BEND, DI

4" DR18 PVC

4" 90° MJ BEND, DI

4" DR18 PVC

6" BLIND FLANGE

4" DR18 PVC

60' REACH 21 WATERLINE EASEMENT

4" FLUSH VALVE ASSEMBLY (SEE DETAIL 850-C-3310)

20" DR25 PVC

20" DR25 PVC

20" BUTTERFLY VALVE W/ BYPASS (SEE DETAIL 850-C-3307)

5.0'

20" 11.25° MJ BEND, DI

DR25 PVC | HDPE

20" DR25 PVC

20" MJ SLEEVE, DI

22" HDPE DR17 IPS

22" ELECTROFUSION COUPLING

22" HDPE DR17 IPS

10.0'

END NGWSP REACH 21
STA 199+76.0=
EXISTING PHASE 3
STA 29+74.6
~~N=1965861.19 (APPROX.)~~ N=1965860.54
~~E=2721433.83 (APPROX.)~~ E=2721432.82

22" DR15.5 HDPE TEE

14.0'

8.0'

PVC TO HDPE TRANSITION

HDPE MJ ADAPTOR WITH STAINLESS BACKUP RING

20" x 22" REDUCER, HDPE DR17

22" HDPE DR17 IPS

10.0'

NOTES:
1. LOCATION OF EXISTING ENWP PHASE 3 PIPING IS APPROXIMATE.
2. ALL DEPTHS AND LOCATIONS OF EXISTING UTILITIES ARE APPROXIMATE. CONTRACTOR RESPONSIBLE TO DETERMINE EXACT LOCATION, DEPTH AND SIZE OF ALL BURIED UTILITY LINES AND TO COMPLY WITH ALL REQUIREMENTS SET FORTH IN THE ENCROACHMENT AGREEMENTS PROVIDED BY UTILITY LINE OPERATORS AND IN THE DETAILS AND SPECIAL NOTES OF THESE DRAWINGS.
3. PIPING SHOWN IS FULLY RESTRAINED.

ENWP PHASE 3 WATERLINE EASEMENT

22" ELECTROFUSION COUPLING

EXISTING ENWP PHASE 3 WATERLINE

Navajo Tribal Trust

6896

EXISTING 22" HDPE DR17 IPS

EXISTING PHASE 3 ISOLATION VALVE STA. 25+78, 400 FT.

6898

6897

Navajo Tribal Trust

REACH 21 WATERLINE EASEMENT

AS BUILT ACCESS DRIVE

AS BUILT PIPE CENTERLINE

CONSTRUCTION AS BUILT

N

0' 3' 6'

GRAPHIC SCALE

RECLAMATION
Managing Water in the West

SMA
Engineering • Environmental Surveying

FOR INFORMATION ONLY

ALWAYS THINK SAFETY

U.S. DEPARTMENT OF THE INTERIOR
BUREAU OF RECLAMATION
NAVAJO-GALLUP WATER SUPPLY PROJECT
NEW MEXICO

CUTTER LATERAL - REACH 21

WATER PIPELINE

NO.	DATE	REVISION	BY	APVD
1	10/28/20	CONSTRUCTION ASBUILT	AAV	TTT
0	12/10/2018	ISSUED FOR CONSTRUCTION	TT	JG

T Tadano
DESIGNED
M Howard / A Vogenthaler
DRAWN
J Garcia
CHECKED
TECH. APPR.
APPROVED
ADMIN APPROVAL - TITLE
FARMINGTON, NM 2020-10-28

REACH 21 PIPELINE

ENWP PHASE 3 TIE IN

850-C-3001

SHEET 369 OF 405

DATE AND TIME PLOTTED
10/28/20
PLOTTED BY
aav

CAD SYSTEM
AUTOCAD
CAD FILENAME
Reach 21 Tank Site Plan DR As Built.dwg

NOTES:
1. EXISTING FENCE SHALL NOT BE CUT UNTIL SECURED TO H-BRACE ASSEMBLY.
2. INSTALL RANCHER STYLE GATE AT ALL FENCE CROSSINGS UNLESS SPECIFICALLY NOTED OTHERWISE ON PLANS.

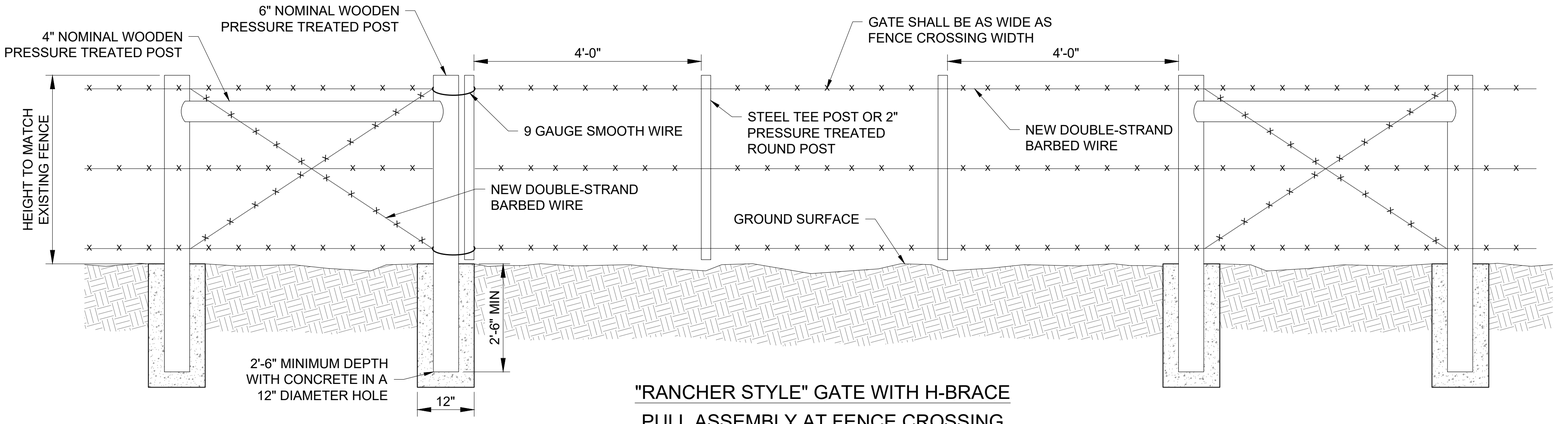

"RANCHER STYLE" GATE WITH H-BRACE PULL ASSEMBLY AT FENCE CROSSING

NOT TO SCALE

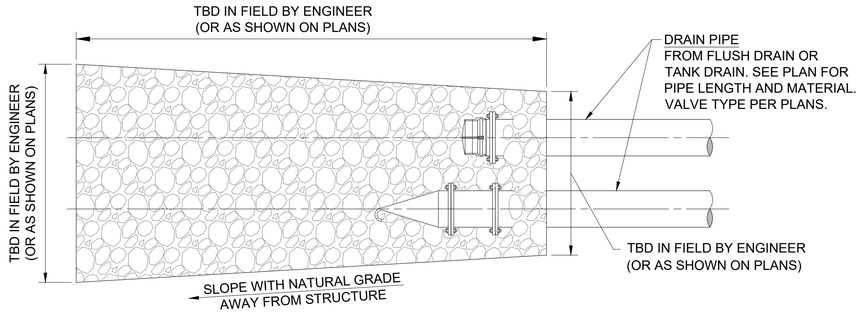

PLAN VIEW

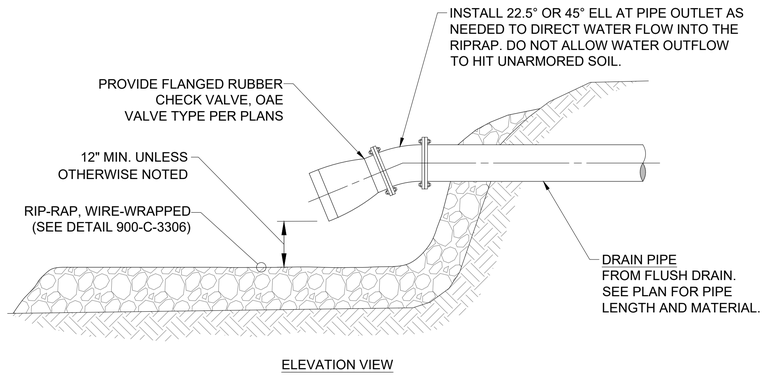

ELEVATION VIEW

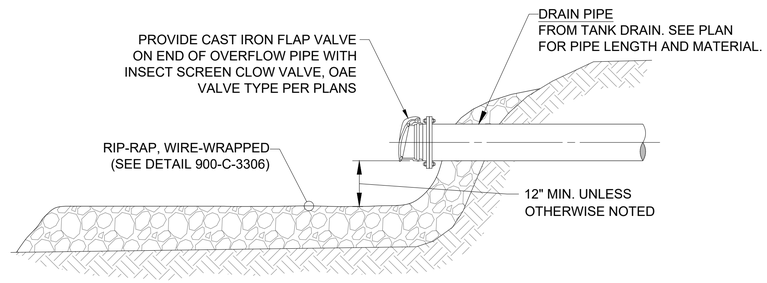

ELEVATION VIEW

TYPICAL SPLASH PAD DETAIL

NOT TO SCALE

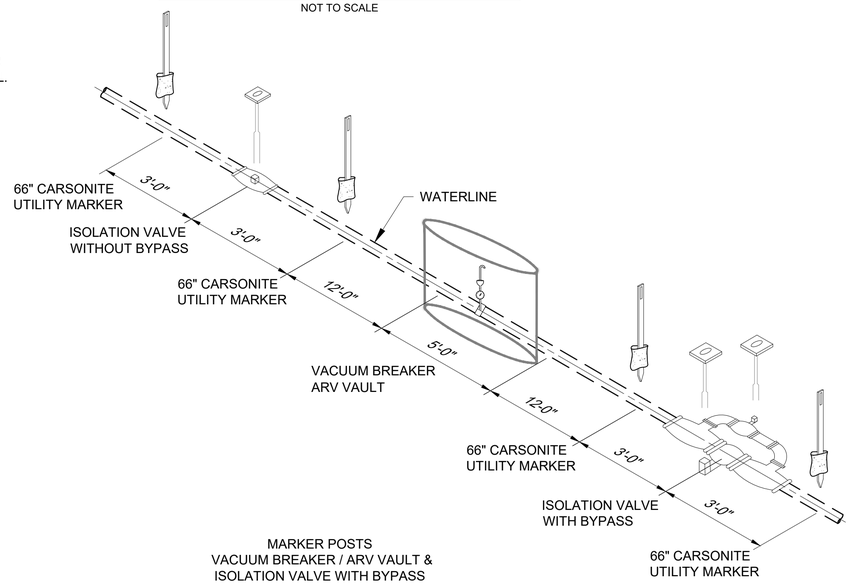

MARKER POSTS
VACUUM BREAKER / ARV VAULT &
ISOLATION VALVE WITH BYPASS

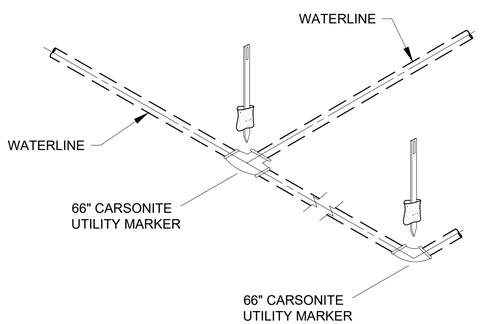

MARKER POSTS
TEE & ELL

TYPICAL MARKER POSTS

NOT TO SCALE

NOTE:
1. CARSONITE UTILITY MARKER ON ALL P.I.'S AND GRADE CHANGES.
2. MAXIMUM DISTANCE BETWEEN CARSONITE UTILITY MARKERS SHALL BE 1500 LF.

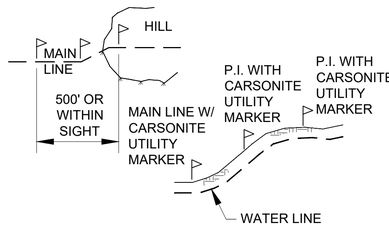

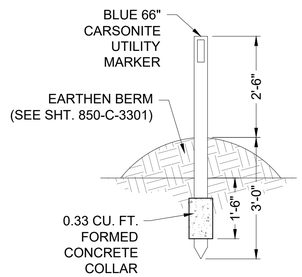

INDIVIDUAL MARKER POST

FOR INFORMATION ONLY

ALWAYS THINK SAFETY

U.S. DEPARTMENT OF THE INTERIOR
BUREAU OF RECLAMATION
NAVAJO-GALLUP WATER SUPPLY PROJECT
NEW MEXICO

CUTTER LATERAL - REACH 21

WATER PIPELINE

NO.	DATE	REVISION		APV'D
0	12/10/2018	ISSUED FOR CONSTRUCTION	TT	BY
1	10/28/20	CONSTRUCTION ASBUILT	AAV	
			TTT	JG

T Tadano
DESIGNED
M Howard / A Vogenthaler
DRAWN
J Garcia
CHECKED
TECH. APPR.
APPROVED
ADMIN APPROVAL — TITLE
FARMINGTON, NM 2020-10-28

CONSTRUCTION AS BUILT

REACH 21 PIPELINE

MISCELLANEOUS CONSTRUCTION DETAILS

850-C-3302

SHEET 372 OF 405

DATE AND TIME PLOTTED
10/28/20
PLOTTED BY
aav

CAD SYSTEM
AUTOCAD
CAD FILENAME
Reach 21 Splash Pad Details As Built.dwg

NOTES:

1. CONTRACTOR SHALL SCRIBE ALL CONCRETE VALVE COLLARS, PER DETAILS "A" & "B" THIS SHEET. CONCRETE SHALL BE SCRIBED PRIOR TO CURING OR ETCHED AFTER CURING WITH 4" GRINDER.
2. AFFIX WARNING PLACARD TO VALVE BOX COVER INSIDE METER CAN FOR ALL MAINLINE VALVES.
3. AFFIX ALUMINUM VALVE IDENTIFICATION PLATES TO ALL SITE VALVE COLLARS, PER DETAILS "B" & "C" THIS SHEET. REFER TO SHEET 900-C-3004 FOR VALVE-SPECIFIC LABELING.
4. ALL MATERIALS SHALL BE WORKING PRESSURE RATED TO AT LEAST THE PRESSURE RATING OF THE PIPE, UNLESS OTHERWISE NOTED.
5. ALL BURIED VALVES SHALL BE COATED WITH FUSION BONDED EPOXY, INTERIOR AND EXTERIOR.
6. NOTE VALVE ENDS SHALL BE FL x FL, MJ x MJ, OR FL x MJ AS INDICATED ON PLANS.
7. APPLY CATHODIC PROTECTION TO ALL BURIED METALLIC PRESSURE-BEARING COMPONENTS LOCATED WITHIN CORROSIVE SOIL ZONES, AS DESIGNATED IN THE PLANS AND/OR SPECIFICATIONS.
8. FLANGES SHALL BE ANSI CLASS 125 (IRON).

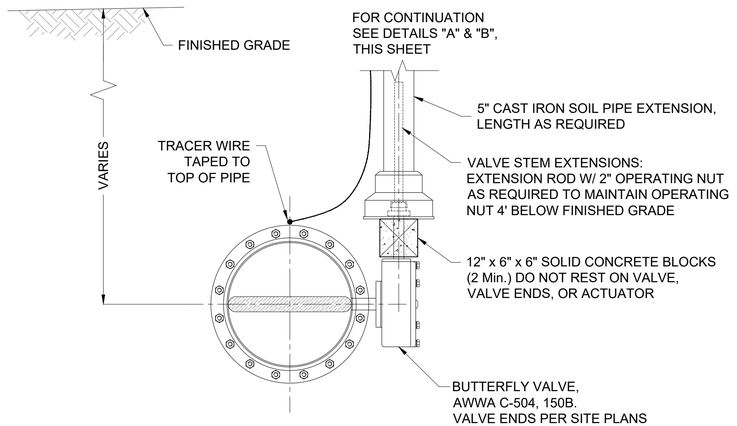

END VIEW

TYPICAL SITE BUTTERFLY VALVE DETAIL WITHOUT BYPASS

NOT TO SCALE

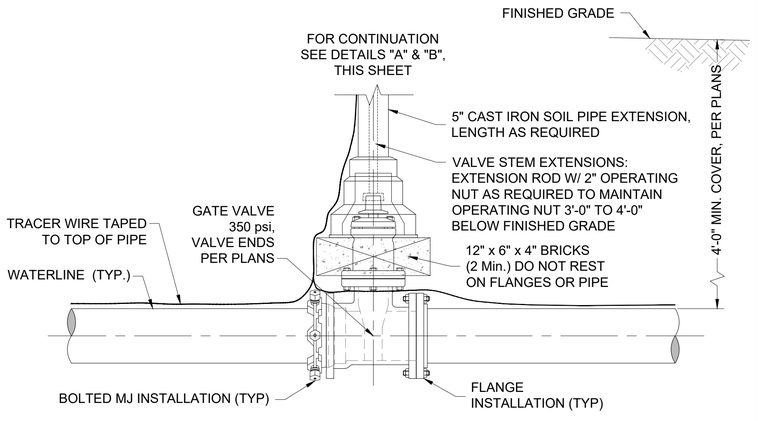

ELEVATION VIEW

TYPICAL GATE VALVE DETAIL

NOT TO SCALE

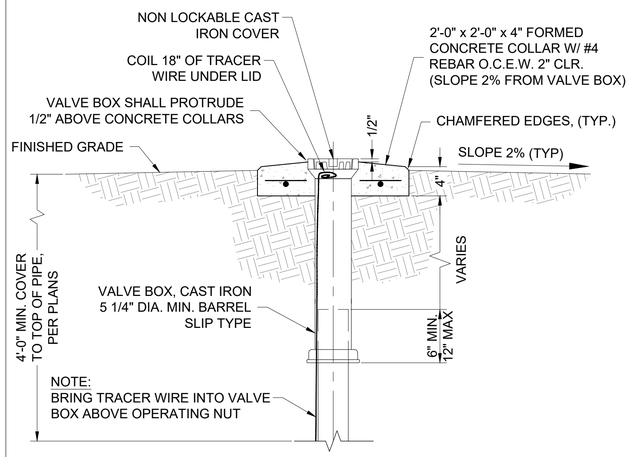

ELEVATION VIEW

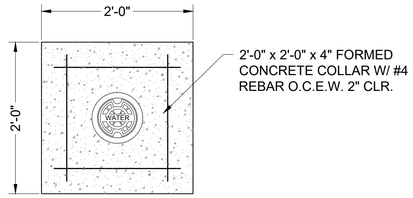

PLAN VIEW - REBAR

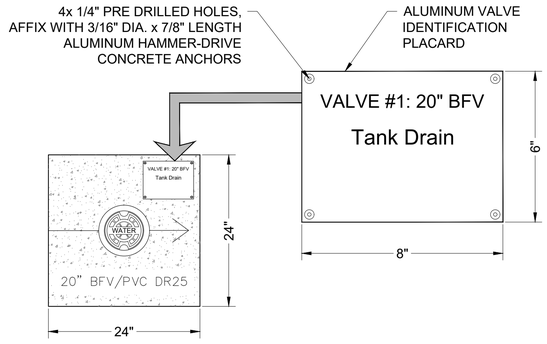

PLAN VIEW - SURFACE

DETAIL "A" TYPICAL SITE VALVE BOX, COLLAR AND VALVE ID PLACARD DETAIL, USE WITHOUT WARNING PLACARD

NOT TO SCALE

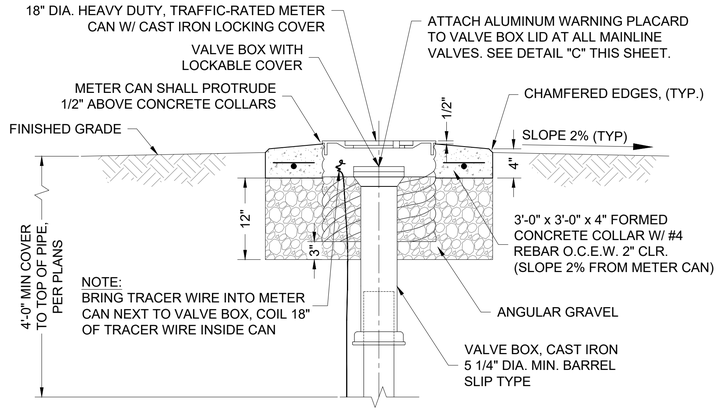

ELEVATION VIEW

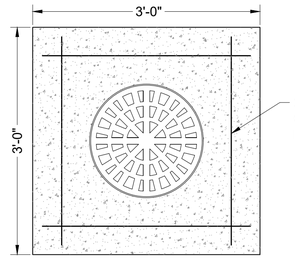

PLAN VIEW - REBAR

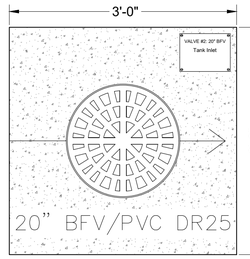

PLAN VIEW - SURFACE
SITE VALVE COLLAR

DETAIL "B" TYPICAL SITE VALVE BOX, COLLAR AND VALVE ID PLACARD DETAIL - USE WITH WARNING PLACARD

NOT TO SCALE

WARNING PLACARD "C-1" FOR VALVES

WARNING PLACARD "C-2" FOR VALVES

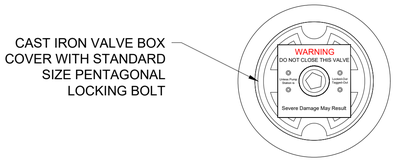

PLAN VIEW

DETAIL "C" TYPICAL WARNING PLACARD DETAIL

NOT TO SCALE

FOR INFORMATION ONLY

ALWAYS THINK SAFETY

U.S. DEPARTMENT OF THE INTERIOR
BUREAU OF RECLAMATION

NAVAJO-GALLUP WATER SUPPLY PROJECT
NEW MEXICO

CUTTER LATERAL - REACH 21

WATER PIPELINE

NO.	DATE	REVISION		
1	10/28/20	CONSTRUCTION ASBUILT	AAV	TTT
0	12/10/2018	ISSUED FOR CONSTRUCTION	TT	JG
			BY	APVD

T Tadano
DESIGNED
M Howard / A Vogenthaler
DRAWN
J Garcia
CHECKED
TECH. APPR.
APPROVED
APPROVAL — TITLE
FARMINGTON, NM 2020-10-28

CONSTRUCTION AS BUILT

REACH 21 PIPELINE

SITE BUTTERFLY & GATE VALVE DETAILS

850-C-3308

SHEET 378 OF 405

DATE AND TIME PLOTTED 10/28/20
PLOTTED BY aav
CAD SYSTEM AUTOCAD
CAD FILENAME I:\Reach 21 BV Detail As Built.dwg

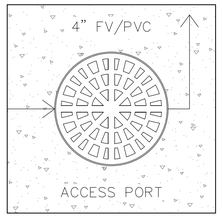

NOTE:
CONCRETE SHALL BE SCRIBED PRIOR TO CURING OR ETCHED AFTER CURING WITH A 4" GRINDER.

COLLAR SCRIBING DETAIL
NOT TO SCALE

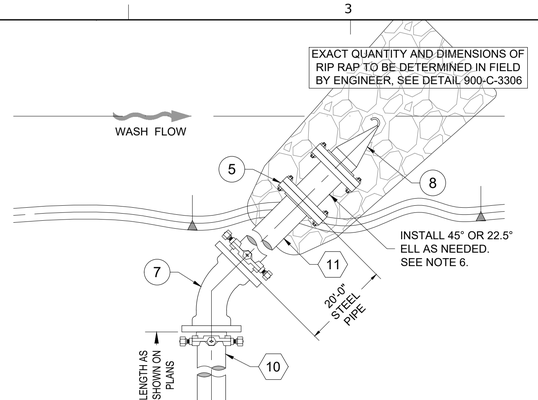

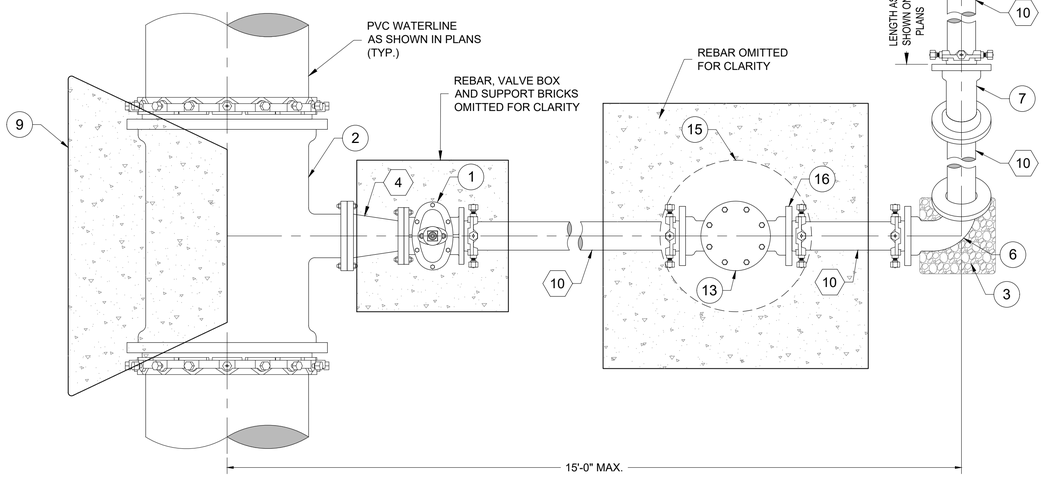

PLAN VIEW

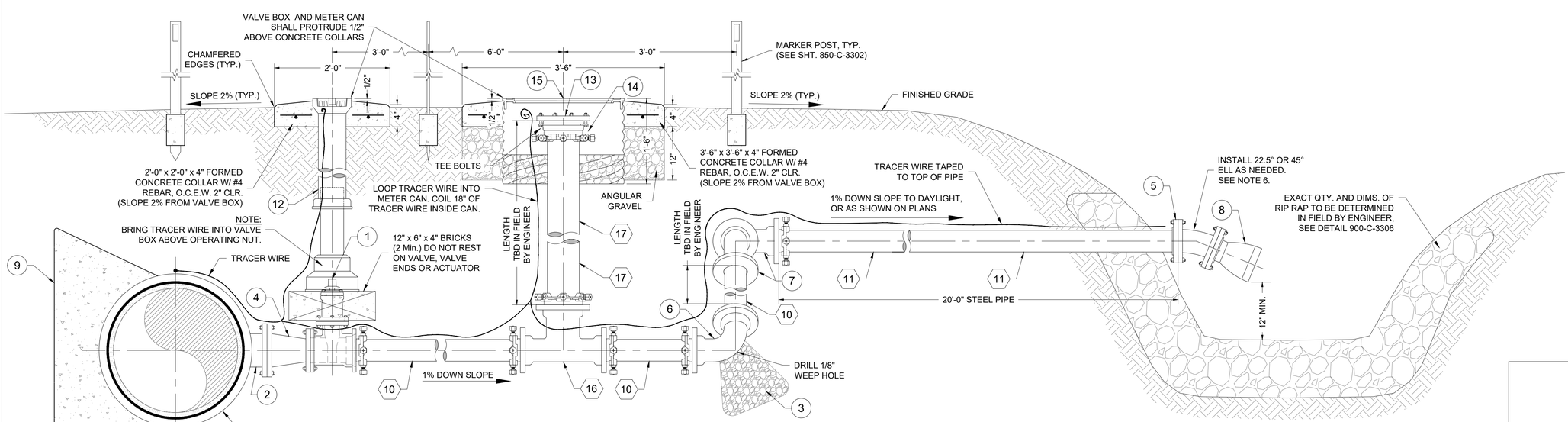

ELEVATION VIEW
(VIEW OF WASH ROTATED FOR CLARITY)

0' 1' 2'

4" FLUSH VALVE WITH RISER DETAIL

KEYED NOTES - 4" FLUSH VALVE WITH RISER

Item No.	DESCRIPTION
1	4" GATE VALVE, FL x MJ, 350 psi (SEE TYPICAL GATE VALVE DETAIL, SHEET 850-C-3308)
2	24" x 6" (SHOWN) OR 20" x 6" MJ x FL REDUCING TEE, D.I., 250 psi
3	ROUNDED ROCK (2 CU. YD.)
4	6" x 4" FL x FL REDUCER, D.I., 250 psi
5	4" STEEL FLANGE, FLAT FACED, ANSI CLASS 150
6	4" 90° MJ ELL, D.I., 350 psi (ROTATED 45° TOWARDS FINISHED GRADE)
7	4" 45° MJ ELL, D.I., 350 psi
8	4" FLANGED RUBBER CHECK VALVE, ANSI CLASS 150
9	2'-0" x 2'-0" THRUST BLOCK
10	4" PVC PIPE, DR18
11	4" STEEL PIPE, STANDARD WALL
12	VALVE BOX SLIP TYPE WITH LOCKING CAST IRON COVER (SEE TYPICAL GATE VALVE DETAIL, SHEET 850-C-3308)
13	6" BLIND FLANGE, FLAT FACED, ANSI CLASS 150
14	6" ANSI CLASS 125 FLANGE ADAPTER, MEGAFLANGE SERIES 2100 W/ TEE BOLTS POINTED
15	24" DIA. HEAVY DUTY, TRAFFIC-RATED METER CAN W/ 20 3/8" Ø OPENING WITH CAST IRON LOCKING COVER AND FORMED CONCRETE COLLAR, (W/ #4 REBAR), DASHED FOR CLARITY
16	4" x 4" x 6" MJ BULLHEAD TEE OR 4" x 4" x 4" MJ TEE W/ 6" x 4" MJ REDUCER, D.I., 350 psi
17	6" PVC PIPE, DR18

NOTES:
1. ALL NON STAINLESS METALLIC PIPE, VALVES AND FITTINGS SHALL BE FBE-COATED, INTERIOR AND EXTERIOR. ALL NON STAINLESS METALLIC PIPE IN CONTACT WITH SOIL SHALL ALSO BE COLD APPLIED TAPE-COATED PER SPECIFICATIONS.
2. ORIENTATION AND LOCATION OF OUTLET TO BE DETERMINED IN FIELD BY ENGINEER.
3. APPLY CATHODIC PROTECTION TO ALL BURIED METALLIC WATER-CARRYING COMPONENTS LOCATED WITHIN CORROSIVE SOIL ZONES, AS DESIGNATED IN THE PLANS AND/OR SPECIFICATIONS.
4. ALL NON STAINLESS STEEL PIPE AND FITTINGS SHALL BE STANDARD WALL. ALL STAINLESS STEEL PIPE AND FITTINGS SHALL HAVE A WORKING PRESSURE OF AT LEAST 350 psi, UNLESS OTHERWISE NOTED.
5. ALL COMPONENTS SHALL REMAIN WITHIN THE PERMANENT RIGHT-OF-WAY. 4" PVC PIPING PARALLEL TO MAIN LINE SHALL BE ANGLED SLIGHTLY TOWARD MAIN LINE, AS NEEDED, SO THAT RUBBER CHECK VALVE REMAINS WITHIN PERMANENT RIGHT-OF-WAY.
6. INSTALL 22.5° OR 45° ELL AT PIPE OUTLET AS NEEDED TO DIRECT WATER FLOW INTO THE RIPRAP. DO NOT ALLOW WATER OUTFLOW TO HIT UNARMORED SOIL.
7. ALL MATERIALS RATED TO AT LEAST MAINLINE PIPE PRESSURE RATING, UNLESS OTHERWISE NOTED.
8. MECHANICAL JOINTS OMITTED FROM ISOMETRIC VIEWS FOR CLARITY.
9. STATIONS OF TEES AND HEIGHT OF RISERS FOR FLUSH VALVES SHOWN ON PLAN AND PROFILE SHEETS ARE APPROXIMATE. CONTRACTOR SHALL ENSURE FLUSH DRAIN LINE OUTFALLS HAVE MINIMUM REQUIRED CLEARANCE TO RIPRAP AT WASH BOTTOMS. CONTRACTOR MAY ADJUST TEE LOCATIONS AND/OR RISER HEIGHTS AS NEEDED TO PROVIDE ADEQUATE OUTFALL HEIGHT, DRAIN PIPE SLOPE, AND COVER.

CONSTRUCTION AS BUILT

RECLAMATION
Managing Water in the West

SMA
Engineering • Environmental Surveying

FOR INFORMATION ONLY
ALWAYS THINK SAFETY

U.S. DEPARTMENT OF THE INTERIOR
BUREAU OF RECLAMATION
NAVAJO-GALLUP WATER SUPPLY PROJECT
NEW MEXICO

CUTTER LATERAL - REACH 21
WATER PIPELINE

NO.	DATE	REVISION	BY	APVD
1	10/28/20	CONSTRUCTION ASBUILT	AAV	TTT
0	12/10/2018	ISSUED FOR CONSTRUCTION	TT	JG

T Tadano
DESIGNED
M Howard / A Vogenthaler
DRAWN
J Garcia
CHECKED
TECH. APPR.
APPROVED
SUPERVISORY ... TITLE
FARMINGTON, NM 2020-10-28

REACH 21 PIPELINE

4-INCH FLUSH VALVE WITH RISER DETAIL

850-C-3310

SHEET 380 OF 405

DATE AND TIME PLOTTED
10/28/20
PLOTTED BY
aav

CAD SYSTEM
AUTOCAD
CAD FILENAME
Reach 21 Flush Valve Details As Built.dwg

SAN JUAN COUNTY, NEW MEXICO
SEC-18, T-25-N, R-9-W
NAVAJO TRIBAL TRUST

Navajo Tribal Trust

CORNER OF TCE N=1967646.11 E=2721377.85

CORNER OF TCE N=1967645.34 E=2721632.75

CORNER OF ESMT. N=1967621.17 E=2721377.71

CORNER OF ESMT. N=1967620.48 E=2721607.71

LIMITS OF SITE EASEMENT

WIRE CAGED RIP-RAP BLANKET, 18" THICK, APPROX. 75 SQ. YDS., EXACT QUANTITY AND DIMS. TO BE DETERMINED IN FIELD BY ENGINEER. (SEE DETAIL, SHT. 900-C-3306)

20" FLAP VALVES (SEE DETAIL 850-C-3302)

8" FLAP VALVE (SEE DETAIL 850-C-3302)

6' HIGH FENCE, 532 L.F. (SEE DETAIL, SHT. 900-C-3305)

STEEL MESH WELDED TO 2" STEEL PIPE AT OUTFALL

APPROX. 1520 SQ. YDS. 2" GRAVEL OVER 3" NMDOT SPECIFICATION BASE COURSE OVER GEOTEXTILE. MIN. 95% STANDARD PROCTOR REQUIRED FOR ENTIRE FENCED AREA.

20" DRAIN LINES (SLOPE @ 4.0% MIN. TO DAYLIGHT)

2" DRAIN LINE (SLOPE @ 4.0% MIN. TO DAYLIGHT)

8" DRAIN LINE (SLOPE @ 4.0% MIN. TO DAYLIGHT)

BORE DHR22RT3B-15-3 N=1967549.0 E=2721527.8

FENCE CORNER N=1967559.05 E=2721434.94

FENCE CORNER N=1967559.06 E=2721591.26

BORE DHR22RT3A-14-4 N=1967552.3 E=2721606.8

BORE DHR22RT3A-14-1 N=1967529.5 E=2721596.4

FENCE CORNER N=1967545.17 E=2721422.12

156'

19'

BORE DHR22RT3B-14-1 N=1967529.4 E=2721508.0

BORE DHR22RT3B-15-2 N=1967531.2 E=2721532.8

BORE DHR22RT3B-15-4 N=1967514.7 E=2721526.9

FUTURE TANK B LOCATION

TANK A N = 1967511.41 E = 2721541.34 (SEE 900-C-3301 TO 900-C-3304 FOR DETAILS)

86'

100'

LIMITS OF SITE EASEMENT

2" DRAIN LINE (SLOPE @ 2.0% MIN. TO ELL)

8" DRAIN LINE (SLOPE @ 3.0% MIN. TO ELL)

2" DRAIN LINE ABOVE 20" TRANSMISSION LINE

2" SENSOR LINE AND SADDLE TAP

73'

20'

77'

FENCE CORNER N=1967459.06 E=2721494.50

FENCE CORNER N=1967459.06 E=2721514.50

FENCE CORNER N=1967459.06 E=2721591.26

FENCE CORNER N=1967459.06 E=2721421.26

40'

20' DOUBLE SWING GATE (SEE FENCE DETAIL 900-C-3305)

117'

APPROX. 632 SQ. YDS. 6" GRAVEL AGGREGATE BASE OVER 6" AGGREGATE SUBBASE, INCLUDING ACCESS DRIVE

BORE DHR22RT3A-15-1B N=1967415.2 E=2721512.8

BEGIN SITE PIPING AT EASEMENT STA: 182+28.2 (SEE SHT. 850-C-2009 FOR CONTINUATION) N=1967422.38 E=2721607.11

184+00

182+00

20" PVC DR25 WATERLINE

BORE DHR22RT3B-15-3B N=1967391.6 E=2721492.8

BORE DHR22RT3A-15-4B N=1967394.9 E=2721535.2

FLOW

FLOW

Navajo Tribal Trust

60' WATERLINE EASEMENT

181+00

10' WIDE ACCESS DRIVE WITH 5' SHOULDERS

CORNER OF ESMT. N=1967320.48 E=2721606.81

LIMITS OF SITE EASEMENT

CORNER OF ESMT. N=1967321.17 E=2721376.81

END SITE PIPING AT EASEMENT STA: 184+74.8 (SEE SHT. 850-C-2009 FOR CONTINUATION) N=1967320.68 E=2721540.91

20" PVC DR25 WATERLINE

185+00

20' TEMP. CONST. ESMT.

CORNER OF TCE N=1967296.24 E=2721376.80

20' TEMP. CONST. ESMT.

60' WATERLINE EASEMENT

20' TEMP. CONST. ESMT.

CORNER OF TCE N=1967295.48 E=2721631.70

N

0' 20' 40'

GRAPHIC SCALE

LEGEND

- 2" GRAVEL OVER 3" NMDOT SPECIFICATION BASE COURSE
- TEMPORARY CONSTRUCTION EASEMENT
- 6" GRAVEL AGGREGATE BASE OVER 6" AGGREGATE SUBBASE
- BORE LOCATION

AS BUILT ACCESS DRIVE

AS BUILT PIPE CENTERLINE

FOR INFORMATION ONLY

ALWAYS THINK SAFETY

RECLAMATION Managing Water in the West

SMA Engineering • Environmental Surveying

U.S. DEPARTMENT OF THE INTERIOR
BUREAU OF RECLAMATION
NAVAJO-GALLUP WATER SUPPLY PROJECT
NEW MEXICO

CUTTER LATERAL - REACH 21

WATER PIPELINE

NO.	DATE	REVISION	BY	APVD
1	10/28/20	CONSTRUCTION ASBUILT	AAV	TTT
0	12/10/2018	ISSUED FOR CONSTRUCTION	TT	JG

T Tadano — DESIGNED
M Howard / A Vogenthaler — DRAWN
J Garcia — CHECKED
TECH. APPR.
APPROVED — ADMIN APPROVAL — TITLE
FARMINGTON, NM 2020-10-28

CONSTRUCTION AS BUILT

REACH 21 PIPELINE

REACH 21 TANK SITE NO. 3 SITE PLAN

900-C-3000

SHEET 388 OF 405

DATE AND TIME PLOTTED 10/28/20
PLOTTED BY aav

CAD SYSTEM AUTOCAD
CAD FILENAME Reach 21 Tank Site Plan DR As Built.dwg

SAN JUAN COUNTY, NEW MEXICO
SEC-18, T-25-N, R-9-W
NAVAJO TRIBAL TRUST

Navajo Tribal Trust

FUTURE TANK B

TANK A

3 - FIBER ROLLS, EXACT QUANTITY AND SPACING TO BE DETERMINED IN FIELD BY ENGINEER. (APPROX. 2200 L.F.) (SEE DETAIL, SHT. 900-C-3307)

20" PVC DR25 WATERLINE

FIBER ROLL, EXACT QUANTITY AND SPACING TO BE DETERMINED IN FIELD BY ENGINEER. (APPROX. 170 L.F.) (SEE DETAIL, SHT. 900-C-3307)

20" PVC DR25 WATERLINE

AS BUILT ACCESS DRIVE

AS BUILT PIPE CENTERLINE

N

0' 20' 40'

GRAPHIC SCALE

FOR INFORMATION ONLY

ALWAYS THINK SAFETY

RECLAMATION
Managing Water in the West

SMA
Engineering • Environmental Surveying

U.S. DEPARTMENT OF THE INTERIOR
BUREAU OF RECLAMATION
NAVAJO-GALLUP WATER SUPPLY PROJECT
NEW MEXICO

CUTTER LATERAL - REACH 21

WATER PIPELINE

NO.	DATE	REVISION	BY	APVD
1	10/28/20	CONSTRUCTION ASBUILT	AAV	TTT
0	12/10/2018	ISSUED FOR CONSTRUCTION	TT	JG

T Tadano
DESIGNED
M Howard / A Vogenthaler
DRAWN
J Garcia
CHECKED
TECH. APPR.
APPROVED
ADMIN APPROVAL TITLE
FARMINGTON, NM 2020-10-28

CONSTRUCTION AS BUILT

REACH 21 PIPELINE

REACH 21 TANK SITE NO. 3 STORMWATER BMP PLAN

900-C-3002

SHEET 390 OF 405

DATE AND TIME PLOTTED
10/28/20
PLOTTED BY
aav

C4D SYSTEM
AUTOCAD
CAD FILENAME
Reach 21 Tank Site Plan DR As Built.dwg

FOR OFFICIAL USE ONLY

KEYED NOTES - REACH 21 TANK SITE	
Item No.	Description
1	3" VACUUM BREAKER W/ 2" AIR RELEASE VALVE (SEE DETAIL 850-C-3309)
2	20" PVC DR25 PIPE
3	20" MJ x MJ TEE, D.I. 350 psi
4	20" x 2" SS 304 TAPPING SADDLE, 250 psi
5	20" FLAP VALVE (SEE DETAIL 850-C-3302)
6	20" FL x FL BUTTERFLY VALVE, 150 psi (SEE DETAIL 850-C-3308)
7	20" x 8" MJ x MJ CONCENTRIC REDUCER, D.I. 350 psi
8	20" MJ x MJ 45° ELL, D.I. 350 psi
9	20" MJ x MJ 90° ELL, D.I. 350 psi
10	20" MJ END CAP, D.I. 350 psi
11	20" STEEL PIPE, STANDARD WALL
12	20" FLANGE ADAPTOR, 165 psi
13	8" PVC DR18 PIPE
14	8" MJ x MJ GATE VALVE, 350 psi (SEE DETAIL 850-C-3308)
15	8" MJ x MJ 90° ELL, D.I. 350 psi
16	8" FLAP VALVE (SEE DETAIL 850-C-3302)
17	30" STEEL PIPE, STANDARD WALL
18	30" x 20" STEEL REDUCER, STANDARD WALL
19	2" PVC PIPE, SCHEDULE 80
20	2" STEEL PIPE, STANDARD WALL GI TAPPED WRAPPED 1
21	2" RESTRAINT COUPLING, FBE - COATED, SS 304 BOLTS, SMITH BLAIR MAXI-GRIP EZ-W, 200 psi, OAE
22	STEEL MESH WELDED TO 2" STEEL PIPE AT OUTFALL
23	2" CURB STOP, 300 psi
24	8" STEEL PIPE, STANDARD WALL
25	8" FLANGE ADAPTOR, 165 psi
26	20" MJ x MJ CROSS, D.I. 350 psi
27	20" x 12" MJ x MJ CONCENTRIC REDUCER, D.I. 350 psi
28	12" PVC DR25 PIPE
29	12" MJ x MJ GATE VALVE, 350 psi (SEE DETAIL 850-C-3308)
30	20" MJ x MJ SOLID SLEEVE, D.I. 350 psi
31	20" ~~MJ x MJ 22.5° ELL,~~ D.I. 350 psi MJ x MJ 45° ELL 1

NOTES:

1. CONTRACTOR SHALL FIELD SURVEY ELEVATION OF OVERFLOW WEIR OF TANK A AND ENSURE OVERFLOW WEIR ELEVATION MATCHES ENWP PHASE 3 DZ REGULATING (SE) TANK OVERFLOW ELEVATION (WITHIN A TOLERANCE OF ±1/2" INCH).
2. PROVIDE TANK SUB-FOUNDATIONS, OVER-EXCAVATION, AND SITE GRADING IN ACCORDANCE WITH GEOTECHNICAL REPORT AND 900-C-3301.
3. PROVIDE TANK FOUNDATION IN ACCORDANCE WITH GEOTECHNICAL REPORT AND TANK MANUFACTURER'S PE-SEALED FOUNDATION DESIGN.
4. NO HIGH SPOTS PERMITTED ON SITE PIPING. ALL SITE PIPING (INCLUDING SENSOR LINES) SHALL SLOPE UP TOWARDS TANKS OR ARVS (MIN. 1%).
5. ALL MATERIALS, FITTINGS AND APPURTENANCES SHALL BE RATED TO AT LEAST 165 psi, UNLESS OTHERWISE NOTED.
6. ALL PIPE AND FITTINGS UNDERNEATH AND WITHIN 5' OF TANK FOUNDATIONS SHALL BE STEEL, AND SHALL BE SHOP WELDED, SHOP COATED, X-RAY TESTED AND PRESSURE TESTED PRIOR TO PLACING FOUNDATIONS. SHOP COATINGS SHALL BE APPLIED AFTER WELDING.
7. ALL VALVES AND STEEL-TO-PVC COUPLINGS AT TANKS SHALL BE LOCATED AT LEAST 5' FROM EDGES OF FOUNDATIONS.
8. ALL BURIED NON-STAINLESS STEEL PIPE AND FITTINGS SHALL BE COLD-APPLIED TAPE-WRAPPED, PER SPECIFICATIONS.
9. GLASS-FUSED STEEL TANKS: ALL 32-INCH AND 20-INCH STEEL PIPE AND FITTINGS SHALL BE FBE-COATED, INTERIOR AND EXTERIOR.
10. ALL BURIED DUCTILE IRON FITTINGS SHALL BE MJ.
11. ALL PRESSURE BEARING PIPES WITHIN SITE SHALL BE FULLY RESTRAINED. REFER TO DETAIL, SHEET 850-C-3303.
12. FIELD LOCATE CONDUITS PER REVIEW WITH ELECTRICIAN.
13. TANK SITE NON-STAINLESS METALLIC COMPONENTS REQUIRE CATHODIC PROTECTION.
14. STEEL OVERFLOW PIPING SHALL BE SHOP COATED WITH UV RESISTANT POLYAMIDE EPOXY PER TECHNICAL SPECIFICATIONS.

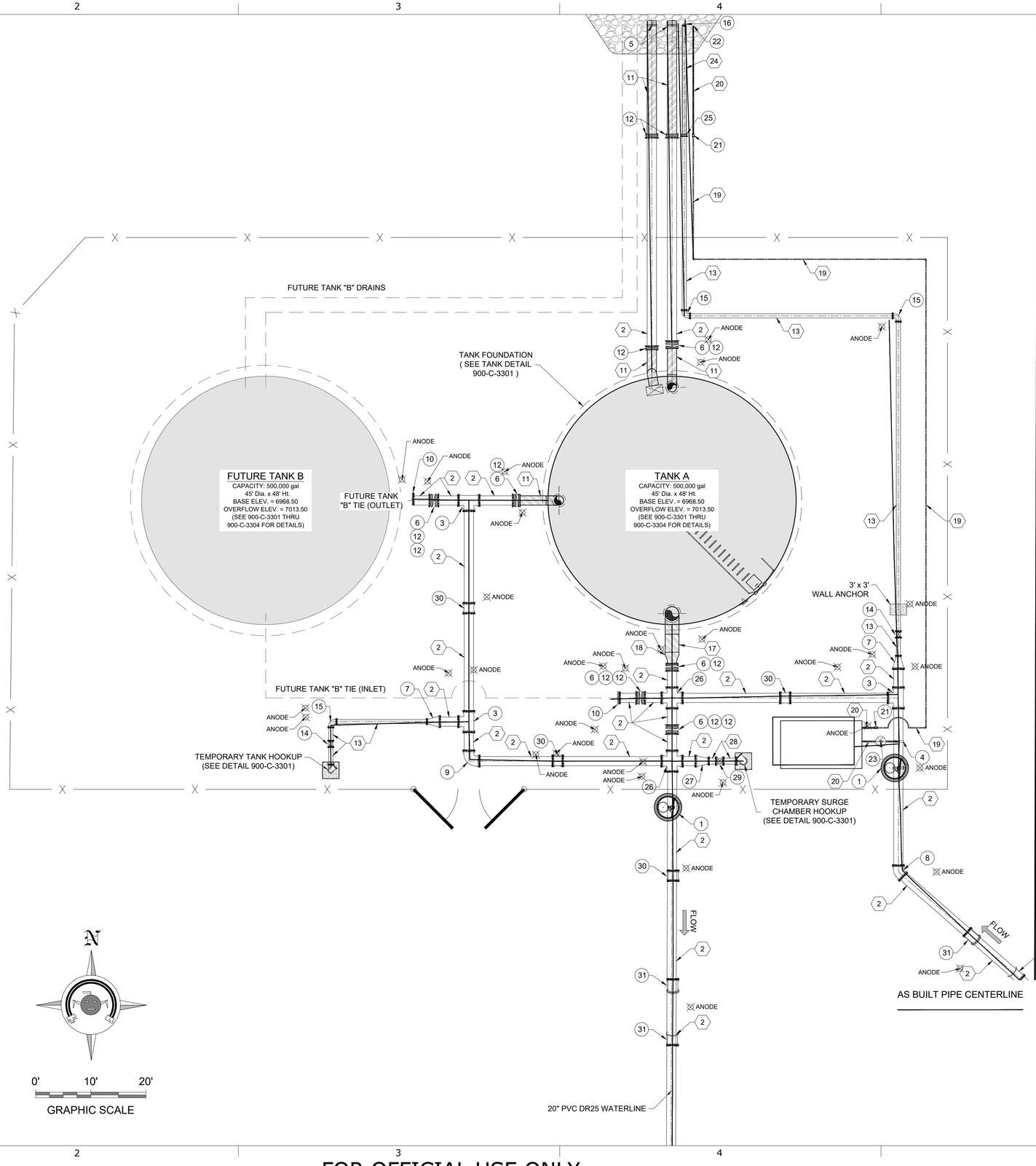

FOR INFORMATION ONLY

RECLAMATION
Managing Water in the West

SMA
Engineering • Environmental Surveying

ALWAYS THINK SAFETY

U.S. DEPARTMENT OF THE INTERIOR
BUREAU OF RECLAMATION
NAVAJO-GALLUP WATER SUPPLY PROJECT
NEW MEXICO

CUTTER LATERAL - REACH 21

WATER PIPELINE

NO.	DATE	REVISION	BY	APVD
1	10/28/20	CONSTRUCTION ASBUILT	AAV	TTT
0	12/10/2018	ISSUED FOR CONSTRUCTION	TT	JG

T Tadano
DESIGNED
M Howard / A Vogenthaler
DRAWN
J Garcia
CHECKED
TECH. APPR.
APPROVED
SIGNATURE / MATERIAL - TITLE
FARMINGTON, NM 2020-10-28

REACH 21 PIPELINE

REACH 21 TANK
SITE NO. 3
PIPING PLAN

900-C-3003

SHEET 391 OF 405

CONSTRUCTION
AS BUILT

DATE AND TIME PLOTTED
10/28/20
PLOTTED BY
aav

CAD SYSTEM
AUTOCAD
CAD FILENAME
Reach 21 Tank Site Plan DR As Built.dwg

FOR OFFICIAL USE ONLY

TANK SITE NUMBER 3 - VALVE NUMBERING						
Valve No.	Valve Size	Valve Type	Pipe Type	Description	Warning Placard (Requires lockable valve box lid inside meter can) (See Sheet 850-C-3308)	Normal Operation
1	8"	GV	PVC	MAIN LINE FLUSH VALVE	NO	CLOSED
2	20"	BFV	STEEL / PVC	TANK A FLOOR DRAIN	NO	CLOSED
3	20"	BFV	PVC	TANK B OUTLET	NO	CLOSED
4	20"	BFV	STEEL / PVC	TANK A OUTLET	NO	OPEN
5	20"	BFV	STEEL / PVC	TANK A INLET	DO NOT CLOSE, PLACARD "C-1"	OPEN
6	20"	BFV	PVC	TANK B INLET	DO NOT CLOSE, PLACARD "C-1"	CLOSED
7	20"	BFV	PVC	TANK A AND B BYPASS	DO NOT OPEN, PLACARD "C-2"	CLOSED
8	12"	GV	PVC	TEMPORARY SURGE CHAMBER HOOK UP	NO	CLOSED
9	8"	GV	PVC	TEMPORARY TANK HOOK UP	NO	CLOSED
10	2"	CV	PVC	SENSOR LINE INLET	NO	OPEN

NOTES:
1. REFERENCE SHEET 850-C-3308 FOR SITE VALVE IDENTIFICATION AND WARNING PLACARD DETAILS.

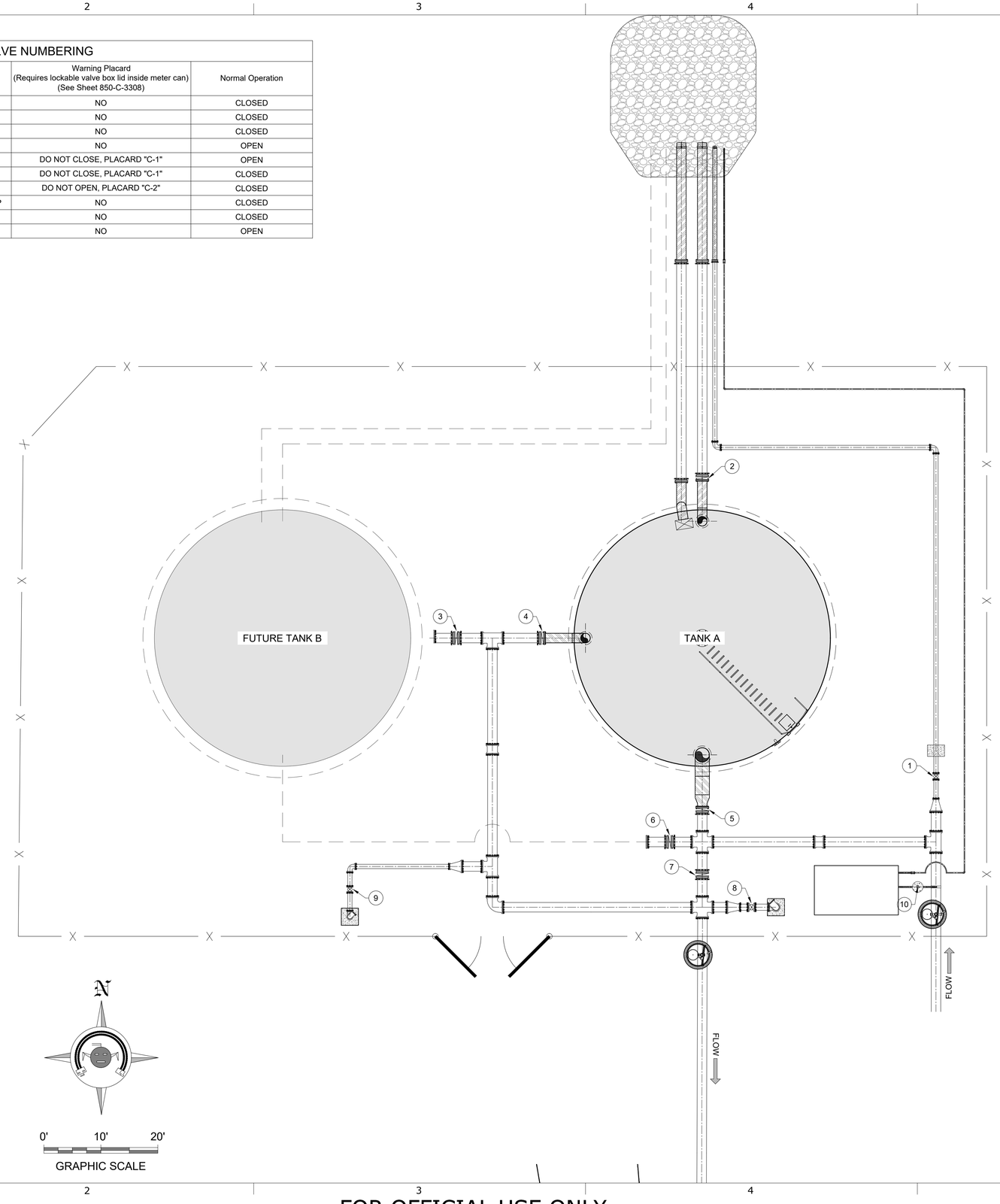

CONSTRUCTION AS BUILT

RECLAMATION
Managing Water in the West

SMA
Engineering • Environmental Surveying

FOR INFORMATION ONLY

ALWAYS THINK SAFETY

U.S. DEPARTMENT OF THE INTERIOR
BUREAU OF RECLAMATION
NAVAJO-GALLUP WATER SUPPLY PROJECT
NEW MEXICO

CUTTER LATERAL - REACH 21

WATER PIPELINE

NO.	DATE	REVISION	BY	APVD
1	10/28/20	CONSTRUCTION ASBUILT	AAV	TTT
0	12/10/2018	ISSUED FOR CONSTRUCTION	TT	JG

T Tadano
DESIGNED
M Howard / A Vogenthaler
DRAWN
J Garcia
CHECKED
TECH. APPR.
APPROVED
ADMIN APPROVAL - TITLE
FARMINGTON, NM 2020-10-28

REACH 21 PIPELINE

REACH 21 TANK
SITE NO. 3 SITE
VALVE NUMBERS

900-C-3004

SHEET 392 OF 405

DATE AND TIME PLOTTED 10/28/20
PLOTTED BY aav
CAD SYSTEM AUTOCAD
CAD FILENAME Reach 21 Tank Site Plan DR As Built.dwg

NOTES:

1. FOUNDATION AND TANK STRUCTURAL DESIGN DRAWINGS AND CALCULATIONS (SEALED BY NEW MEXICO-LICENSED PROFESSIONAL ENGINEER) TO BE PROVIDED BY TANK MANUFACTURER. FOUNDATION SHALL BE EITHER CONCRETE RING OR CONCRETE MAT, BASED ON LICENSED P.E.'s DESIGN AND THE RECOMMENDATIONS OF THE GEOTECHNICAL REPORT BY NV5 #444317-2360000.02 DATED NOVENMBER 20, 2018.
2. IF RINGWALL FOUNDATION IS USED, TANK SHALL BEAR ON A MINIMUM OF 3 FEET OF ENGINEERED FILL. ENGINEERED FILL SHALL EXTEND 3 FEET BEYOND RINGWALL AND RINGWALL FOOTING SHALL BEAR ON A MINIMUM OF 18 INCHES OF ENGINEERED FILL MEASURED AT BOTTOM OF OVER-EXCAVATION. INCREASE DEPTH OF OVER-EXCAVATION, IF NECESSARY, TO ENSURE ENGINEERED FILL BEARS UNIFORMLY ON CUT; DO NOT ALLOW TRANSITION FROM CUT TO FILL TO PASS UNDERNEATH OR WITHIN 5 HORIZONTAL FEET OF TANK. REFER TO GEOTECHNICAL REPORT BY NV5 #444317-2360000.02 DATED NOVENMBER 20, 2018 FOR SUBSURFACE INFORMATION, OVER EXCAVATION REQUIREMENTS, SUBGRADE PREPARATION, AND STRUCTURAL FILL & COMPACTION. ENGINEERED FILL SHALL BE COMPACTED TO 95% MIN. MODIFIED PROCTOR.
3. IF CONCRETE MAT FOUNDATION IS USED, TANK SHALL BEAR ON A MINIMUM OF 18 INCHES OF ENGINEERED FILL. ENGINEERED FILL SHALL EXTEND 3 FEET BEYOND MAT, MEASURED AT BOTTOM OF OVER-EXCAVATION. INCREASE DEPTH OF OVER-EXCAVATION, IF NECESSARY, TO ENSURE ENGINEERED FILL BEARS UNIFORMLY ON CUT; DO NOT ALLOW TRANSITION FROM CUT TO FILL TO PASS UNDERNEATH OR WITHIN 5 HORIZONTAL FEET OF TANK. REFER TO GEOTECHNICAL REPORT BY NV5 #444317-2360000.02 DATED NOVENMBER 20, 2018 FOR SUBSURFACE INFORMATION, OVER EXCAVATION REQUIREMENTS, SUBGRADE PREPARATION, AND STRUCTURAL FILL & COMPACTION. ENGINEERED FILL SHALL BE COMPACTED TO 95% MIN. MODIFIED PROCTOR.
4. STATED TANK VOLUMES ARE NOMINAL. ACTUAL TANK VOLUMES SHALL BE WITHIN 2% OF THE STATED NOMINAL VALUE.
5. TANK COLOR TO BE JUNIPER GREEN.
6. TANK APPURTENANCES SHOWN IN ELEVATION VIEW HAVE BEEN ROTATED INTO VIEW FOR DEPICTION PURPOSES.
7. FOR GLASSED FUSED TO BOLTED STEEL TANKS, ALL STEEL PIPE AND FITTINGS SHALL BE FBE COATED, INTERIOR AND EXTERIOR.
8. ALL STEEL PIPE AND FITTINGS UNDERNEATH AND WITHIN 5' OF TANKS OR BUILDINGS SHALL BE SHOP WELDED AND COATED, X-RAY TESTED AND PRESSURE TESTED PRIOR TO POURING FOUNDATIONS.
9. ALL STEEL PIPE AND FITTINGS SHALL BE STANDARD WALL UNLESS OTHERWISE NOTED.
10. SANDBLASTING WASTE SHALL BE DISPOSED OF OFF-SITE AT AN APPROVED SOLID WASTE FACILITY AT THE CONTRACTOR'S EXPENSE.
11. ALL BASE AND OVERFLOW ELEVATIONS PROVIDED IN THESE DRAWINGS ARE APPROXIMATE. CONTRACTOR SHALL FIELD SURVEY ELEVATION OF ENWP PHASE 3 DZ REGULATING (SE) TANK OVERFLOW WEIR AND ENSURE BOTH TANK'S WEIR ELEVATIONS MATCH WITHIN A TOLERANCE OF ±1/2 INCHES.
12. ALL STEEL PIPE FLANGES SHALL BE ANSI CLASS 150.
13. EXACT ORIENTATION OF ALL TANK FEATURES AND PIPE PENETRATIONS TO BE DETERMINED IN THE FIELD BY THE ENGINEER. TANK MANUFACTURER SHALL CONFIRM ALL LOCATIONS W/ ENGINEER PRIOR TO FABRICATION. SOME FEATURES MAY BE ROTATED IN ELEVATION VIEW FOR CLARITY.
14. FOUNDATION AND FLOOR SLOPE UPWARDS 1% TOWARD CENTER TO PREVENT "OILCANNING".
15. PASSIVE CATHODIC PROTECTION REQUIRED.
16. STEEL OVERFLOW PIPING SHALL BE SHOP COATED WITH UV RESISTANT POLYAMIDE EPOXY PER TECHNICAL SPECIFICATIONS.

KEYED NOTES
8" TEMPORARY TANK HOOK-UP

Item No.	Description
1	8" MJ x MJ GATE VALVE, 250 psi
2	8" PVC PIPE, DR18
3	8" STEEL PIPE, STANDARD WALL
4	8" MJ x MJ 90° ELL, D.I., 350 psi
5	8" STEEL FLANGE, WELDED
6	8" BLIND FLANGE WITH GASKET
7	8" 90° ELL, STEEL, WELDED (ORIENTATION PER SITE PLANS)

NOTES:
1. ALL MATERIALS SHALL BE RATED TO AT LEAST 150 psi, UNLESS OTHERWISE NOTED.
2. ALL METALLIC PIPE, VALVES AND FITTINGS SHALL BE FBE-COATED, INTERIOR AND EXTERIOR. ALL METALLIC PIPE IN CONTACT WITH SOIL SHALL ALSO BE COLD APPLIED TAPE-COATED, PER SPECIFICATIONS.
3. FLANGES SHALL BE ANSI CLASS 150 (STEEL) OR ANSI CLASS 125 (IRON).
4. ALL STEEL PIPE AND FITTINGS SHALL BE STANDARD WALL.
5. VALVE BOX LID AND ALL ABOVE GROUND STEEL COMPONENTS SHALL BE COATED BLUE.

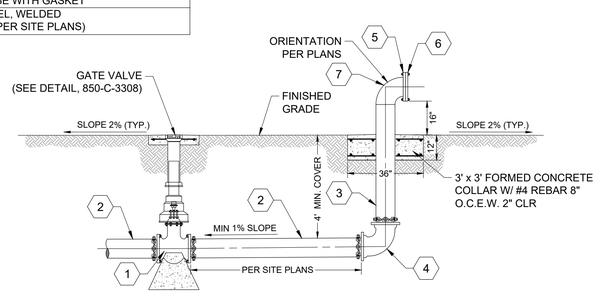

TEMPORARY TANK HOOK-UP DETAIL

NOT TO SCALE

KEYED NOTES
12" TEMPORARY SURGE CHAMBER HOOK-UP

Item No.	Description
1	12" MJ x MJ GATE VALVE, 250 psi
2	12" PVC PIPE, DR18
3	12" STEEL PIPE, STANDARD WALL
4	12" MJ x MJ 90° ELL, D.I., 350 psi
5	12" STEEL FLANGE, WELDED
6	12" BLIND FLANGE WITH GASKET
7	12" 90° ELL, STEEL, WELDED (ORIENTATION PER SITE PLANS)

NOTES:
1. ALL MATERIALS SHALL BE RATED TO AT LEAST 150 psi, UNLESS OTHERWISE NOTED.
2. ALL METALLIC PIPE, VALVES AND FITTINGS SHALL BE FBE-COATED, INTERIOR AND EXTERIOR. ALL METALLIC PIPE IN CONTACT WITH SOIL SHALL ALSO BE COLD APPLIED TAPE-COATED, PER SPECIFICATIONS.
3. FLANGES SHALL BE ANSI CLASS 150 (STEEL) OR ANSI CLASS 125 (IRON).
4. ALL STEEL PIPE AND FITTINGS SHALL BE STANDARD WALL.
5. VALVE BOX LID AND ALL ABOVE GROUND STEEL COMPONENTS SHALL BE COATED BLUE.

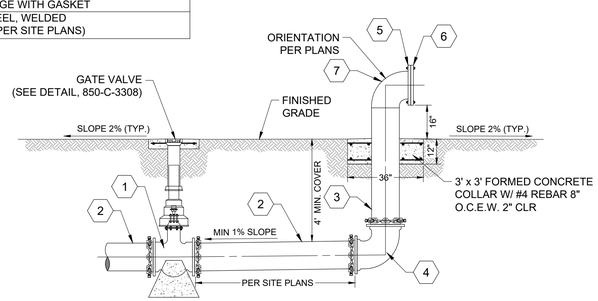

TEMPORARY SURGE CHAMBER HOOK-UP DETAIL

NOT TO SCALE

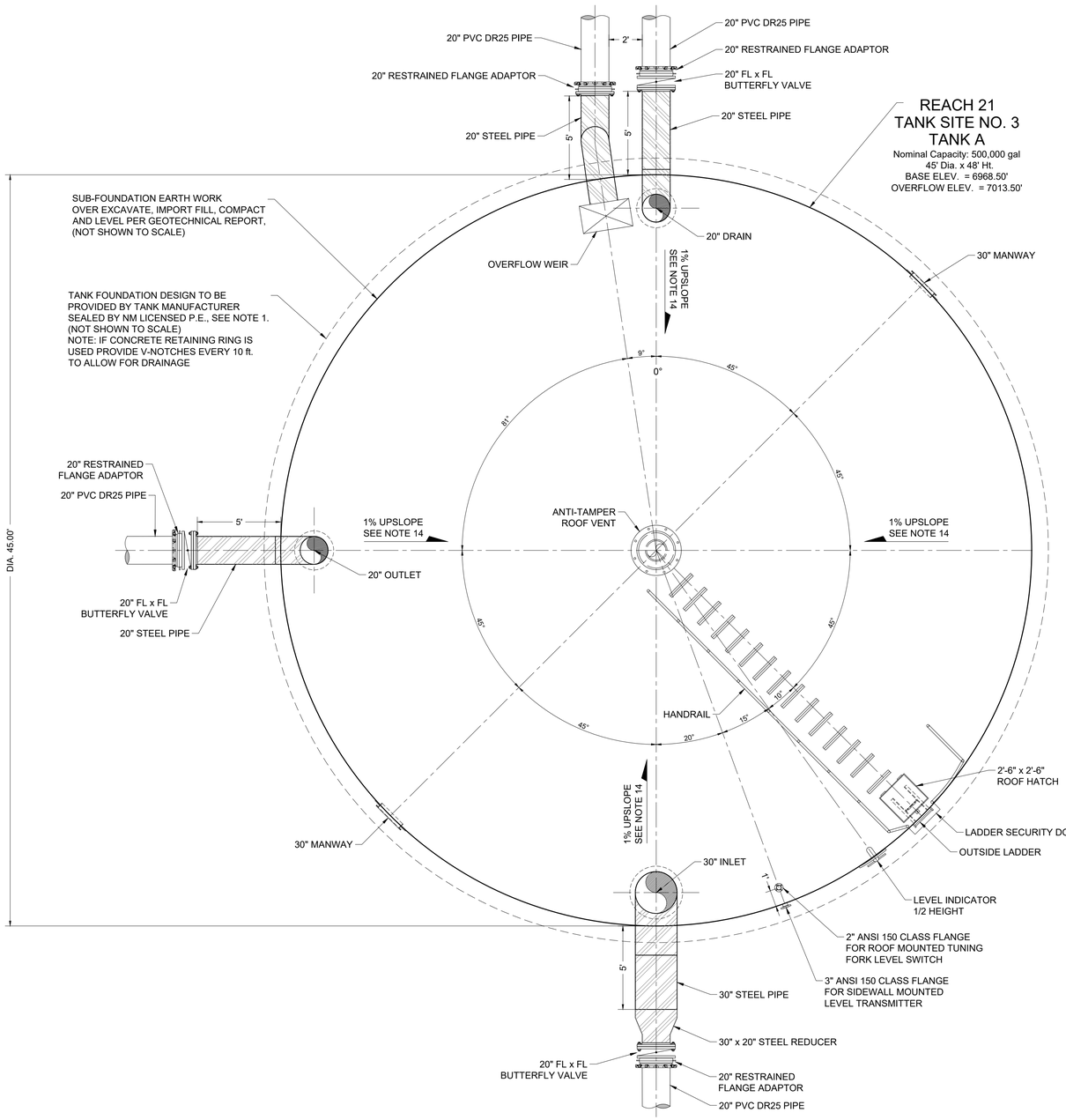

PLAN VIEW

TANK SITE NO. 3
TANK A DETAIL

CONSTRUCTION AS BUILT

FOR INFORMATION ONLY

RECLAMATION
Managing Water in the West

SMA
Engineering • Environmental Surveying

ALWAYS THINK SAFETY

U.S. DEPARTMENT OF THE INTERIOR
BUREAU OF RECLAMATION
NAVAJO-GALLUP WATER SUPPLY PROJECT
NEW MEXICO

CUTTER LATERAL - REACH 21

WATER PIPELINE

NO.	DATE	REVISION	BY	APVD
1	10/28/20	CONSTRUCTION ASBUILT	AAV	TTT
0	12/10/2018	ISSUED FOR CONSTRUCTION	TT	JG

T Tadano
DESIGNED
M Howard / A Vogenthaler
DRAWN
J Garcia
CHECKED
TECH. APPR.
APPROVED
ADMIN APPROVAL - TITLE
FARMINGTON, NM 2020-10-28

REACH 21 PIPELINE

TANK DETAILS (1 of 2)

900-C-3301

SHEET 393 OF 405

DATE AND TIME PLOTTED 10/28/20
PLOTTED BY aav
CAD SYSTEM AUTOCAD
CAD FILENAME Reach 21Tank Details DR As Built.dwg

NOTES:

1. FOUNDATION AND TANK STRUCTURAL DESIGN DRAWINGS AND CALCULATIONS (SEALED BY NEW MEXICO-LICENSED PROFESSIONAL ENGINEER) TO BE PROVIDED BY TANK MANUFACTURER. FOUNDATION SHALL BE EITHER CONCRETE RING OR CONCRETE MAT, BASED ON LICENSED P.E.'s DESIGN AND THE RECOMMENDATIONS OF THE GEOTECHNICAL REPORT BY NV5 #444317-2360000.02 DATED NOVENMBER 20, 2018.
2. IF RINGWALL FOUNDATION IS USED, TANK SHALL BEAR ON A MINIMUM OF 3 FEET OF ENGINEERED FILL. ENGINEERED FILL SHALL EXTEND 3 FEET BEYOND RINGWALL AND RINGWALL FOOTING SHALL BEAR ON A MINIMUM OF 18 INCHES OF ENGINEERED FILL MEASURED AT BOTTOM OF OVER-EXCAVATION. INCREASE DEPTH OF OVER-EXCAVATION, IF NECESSARY, TO ENSURE ENGINEERED FILL BEARS UNIFORMLY ON CUT; DO NOT ALLOW TRANSITION FROM CUT TO FILL TO PASS UNDERNEATH OR WITHIN 5 HORIZONTAL FEET OF TANK. REFER TO GEOTECHNICAL REPORT BY NV5 #444317-2360000.02 DATED NOVENMBER 20, 2018 FOR SUBSURFACE INFORMATION, OVER EXCAVATION REQUIREMENTS, SUBGRADE PREPARATION, AND STRUCTURAL FILL & COMPACTION. ENGINEERED FILL SHALL BE COMPACTED TO 95% MIN. MODIFIED PROCTOR.
3. IF CONCRETE MAT FOUNDATION IS USED, TANK SHALL BEAR ON A MINIMUM OF 18 INCHES OF ENGINEERED FILL. ENGINEERED FILL SHALL EXTEND 3 FEET BEYOND MAT, MEASURED AT BOTTOM OF OVER-EXCAVATION. INCREASE DEPTH OF OVER-EXCAVATION, IF NECESSARY, TO ENSURE ENGINEERED FILL BEARS UNIFORMLY ON CUT; DO NOT ALLOW TRANSITION FROM CUT TO FILL TO PASS UNDERNEATH OR WITHIN 5 HORIZONTAL FEET OF TANK. REFER TO GEOTECHNICAL REPORT BY NV5 #444317-2360000.02 DATED NOVENMBER 20, 2018 FOR SUBSURFACE INFORMATION, OVER EXCAVATION REQUIREMENTS, SUBGRADE PREPARATION, AND STRUCTURAL FILL & COMPACTION. ENGINEERED FILL SHALL BE COMPACTED TO 95% MIN. MODIFIED PROCTOR.
4. STATED TANK VOLUMES ARE NOMINAL. ACTUAL TANK VOLUMES SHALL BE WITHIN 2% OF THE STATED NOMINAL VALUE.
5. TANK COLOR TO BE JUNIPER GREEN.
6. TANK APPURTENANCES SHOWN IN ELEVATION VIEW HAVE BEEN ROTATED INTO VIEW FOR DEPICTION PURPOSES.
7. FOR GLASSED FUSED TO BOLTED STEEL TANKS, ALL STEEL PIPE AND FITTINGS SHALL BE FBE COATED, INTERIOR AND EXTERIOR.
8. ALL STEEL PIPE AND FITTINGS UNDERNEATH AND WITHIN 5' OF TANKS OR BUILDINGS SHALL BE SHOP WELDED AND COATED, X-RAY TESTED AND PRESSURE TESTED PRIOR TO POURING FOUNDATIONS.
9. ALL STEEL PIPE AND FITTINGS SHALL BE STANDARD WALL UNLESS OTHERWISE NOTED.
10. SANDBLASTING WASTE SHALL BE DISPOSED OF OFF-SITE AT AN APPROVED SOLID WASTE FACILITY AT THE CONTRACTOR'S EXPENSE.
11. ALL BASE AND OVERFLOW ELEVATIONS PROVIDED IN THESE DRAWINGS ARE APPROXIMATE. CONTRACTOR SHALL FIELD SURVEY ELEVATION OF ENWP PHASE 3 DZ REGULATING (SE) TANK OVERFLOW WEIR AND ENSURE BOTH TANK'S WEIR ELEVATIONS MATCH WITHIN A TOLERANCE OF ±1/2 INCHES.
12. ALL STEEL PIPE FLANGES SHALL BE ANSI CLASS 150.
13. EXACT ORIENTATION OF ALL TANK FEATURES AND PIPE PENETRATIONS TO BE DETERMINED IN THE FIELD BY THE ENGINEER. TANK MANUFACTURER SHALL CONFIRM ALL LOCATIONS W/ ENGINEER PRIOR TO FABRICATION. SOME FEATURES MAY BE ROTATED IN ELEVATION VIEW FOR CLARITY.
14. FOUNDATION AND FLOOR SLOPE UPWARDS 1% TOWARD CENTER TO PREVENT "OILCANNING".
15. PASSIVE CATHODIC PROTECTION REQUIRED.
16. STEEL OVERFLOW PIPING SHALL BE SHOP COATED WITH UV RESISTANT POLYAMIDE EPOXY PER TECHNICAL SPECIFICATIONS.

DESIGN CODES:
IBC 2008
AWWA D103-09
ASCE 7-05

DESIGN PARAMETERS:
Roof Live Load = 15 psf
Roof Snow Load = 25 psf
Design S.G. = 1.0
Design Internal Pressure = Atm.
Design External Pressure = Atm.
Wind (AWWA D103-09):
Importance Factor = 1.15
Speed = 100 (3 Sec. Gust, mph)
Exposure Category = C
Seismic (AWWA D103-09):
Ss = 0.138 g SDS = 0.147 g
S1 = 0.054 g SD1 = 0.086 g
Av = 0.03 g
Seismic Use Group = III (AWWA D103)
Soil Site Class = D (Assumed)
Seismic Design Category = C (ASCE 7)

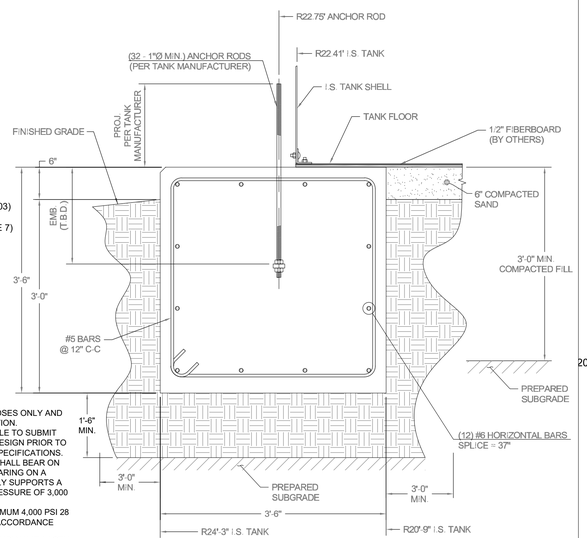

GENERAL SECTION
NOT TO SCALE

NOTES:
1. THIS DOCUMENT IS FOR BID PURPOSES ONLY AND IS NOT INTENDED FOR CONSTRUCTION.
2. TANK MANUFACTURER RESPONSIBLE TO SUBMIT FINAL PE STAMPED FOUNDATION DESIGN PRIOR TO CONSTRUCTION PER TECHNICAL SPECIFICATIONS.
3. THE TANK FLOOR AND RINGWALL SHALL BEAR ON COMPACTED STRUCTURAL FILL BEARING ON A PREPARED SUBGRADE THAT SAFELY SUPPORTS A MINIMUM ALLOWABLE BEARING PRESSURE OF 3,000 PSF.
4. ALL CONCRETE SHALL HAVE A MINIMUM 4,000 PSI 28 DAY COMPRESSIVE STRENGTH IN ACCORDANCE WITH ACI 318.
5. CONCRETE AGGREGATE SHALL COMPLY WITH ASTM C33 WITH A MAXIMUM AGGREGATE SIZE OF 1 1/2".
6. ALL REINFORCEMENT STEEL SHALL CONFORM TO THE ASTM A615 GRADE 60 SPECIFICATION.
7. DETAILING OF BAR SUPPORTS FOR REINFORCING STEEL SHALL BE IN ACCORDANCE WITH THE ACI STANDARD DETAILS AND DETAILING OF CONCRETE REINFORCEMENT AS REPORTED BY ACI COMMITTEE 315.

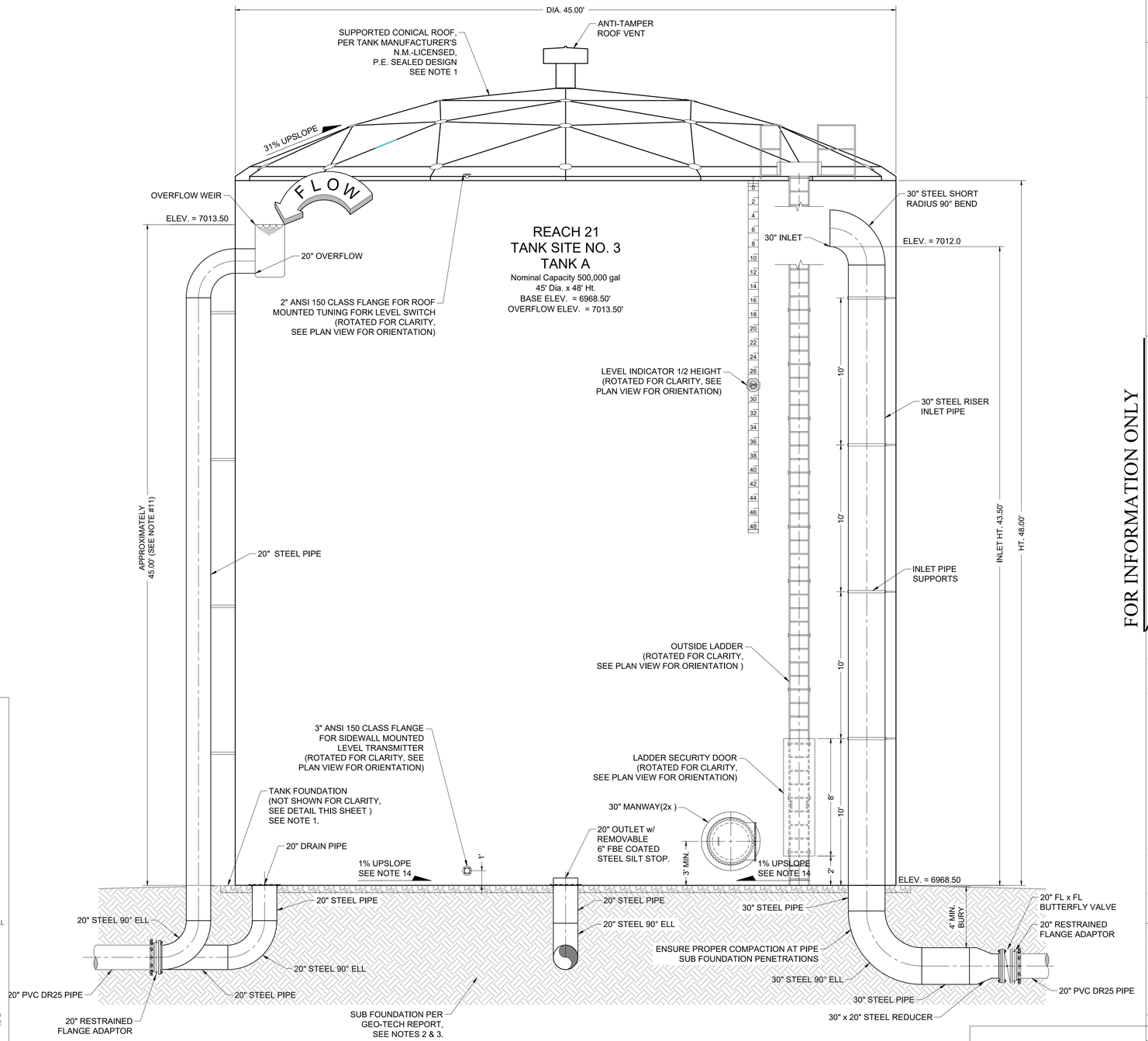

ELEVATION VIEW A-A

TANK SITE NO. 3
TANK A DETAIL

0' 4' 8'

CONSTRUCTION AS BUILT

RECLAMATION
Managing Water in the West

SMA
Engineering • Environmental Surveying

FOR INFORMATION ONLY
ALWAYS THINK SAFETY

U.S. DEPARTMENT OF THE INTERIOR
BUREAU OF RECLAMATION
NAVAJO-GALLUP WATER SUPPLY PROJECT
NEW MEXICO

CUTTER LATERAL - REACH 21
WATER PIPELINE

NO.	DATE	REVISION		
0	12/10/2018	ISSUED FOR CONSTRUCTION	TT	BY
1	10/28/20	CONSTRUCTION ASBUILT	AAV	TTT
			JG	APVD

T Tadano
DESIGNED
M Howard / A Vogenthaler
DRAWN
J Garcia
CHECKED
TECH. APPR.
APPROVED
ACRES APPROVAL TITLE
FARMINGTON, NM 2020-10-28

REACH 21 PIPELINE

TANK DETAILS (2 of 2)

900-C-3302

SHEET 394 OF 405

DATE AND TIME PLOTTED 10/28/20
PLOTTED BY aav
CAD SYSTEM AUTOCAD
CAD FILENAME Reach 21Tank Details DR As Built.dwg

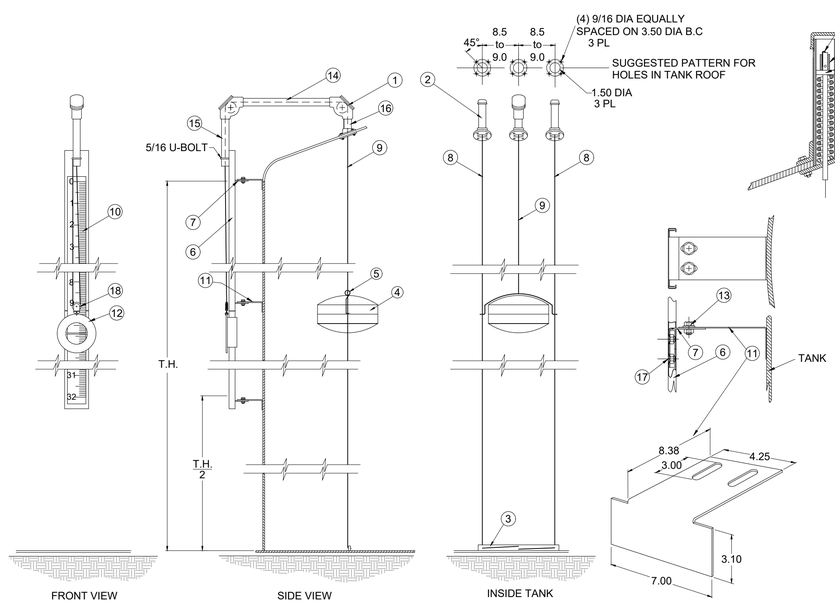

ITEM	NAME	MATERIAL
1	ELBOW, 90°	TEMPERATURE ULTEM PULLEY A356 ALUMINUM WITH HIGH
2	TOP ANCHOR TENSIONER	WITH STAINLESS STEEL SPRING HDG STEEL TENSIONER ASSEMBLY
3	BOTTOM ANCHOR	STAINLESS STEEL ANGLE
4	S/S FLOAT- 16#	WELD, FOAM FILLED .045H STAINLESS STEEL
5	CABLE FASTENERS	304 STAINLESS STEEL CRIMP & THIMBLE
6	GAUGE BOARD	16 GA HDG "C" CHANNEL
7	STD. TP BRACKETS	STAINLESS STEEL
8	FLOAT GUIDE WIRE	1/8" - 304 STAINLESS STEEL
9	FLOAT CABLE	3/32" - 304 STAINLESS STEEL
10	GAGE TAPE	ADHESIVE BACKED VINYL
11	BRACKET	STAINLESS STEEL
12	ROUND TARGET-9.5#	RED, POWDER COATED, DUCT. IRON
13	BOLT & NUT SETS	304 STAINLESS STEEL
14	PIPE (INCLUDED IN KIT)	1-1/2" x 16 HDG PIPE
15	PIPE (INCLUDED IN KIT)	1-1/2" x 14 HDG PIPE W/ PLUG
16	PIPE (INCLUDED IN KIT)	1-1/2" x 4 HDG PIPE
17	TRUSS HEAD S/S BOLTS, NYLOC NUTS & WASHERS	
18	1/2 TRAVEL PULLEY	STAINLESS STEEL

TYPICAL HALF HEIGHT LIQUID INDICATOR DETAILS
NOT TO SCALE

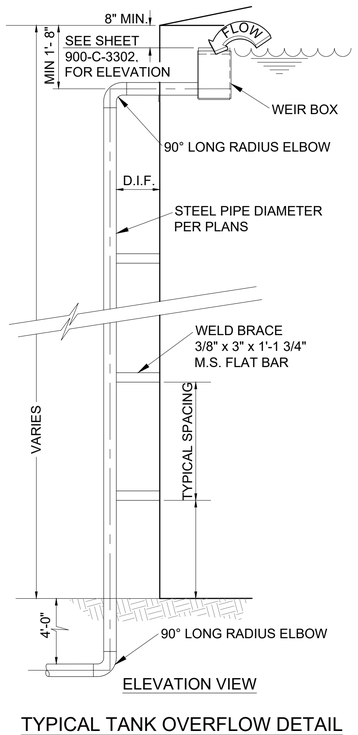

ELEVATION VIEW

TYPICAL TANK OVERFLOW DETAIL
NOT TO SCALE

SEE TANK PLAN AND ELEVATION SHEETS 900-C-3301 & 900-C-3302, FOR PIPE SIZE, HEIGHT AND ELEVATION.

NOTE:
1. DIMENSIONS INDICATING SEPARATION BETWEEN WEIR FROM ROOF ARE MINIMUMS ONLY. ACTUAL DIMENSIONS MAY BE GREATER TO ACCOMMODATE SLOSH WAVE, AS CALCULATED BY TANK MANUFACTURER.
2. TANK MANUFACTURER SHALL PROVIDE DESIGN CALCULATIONS AND FABRICATION DRAWINGS SEALED BY A NEW MEXICO LICENSED PROFESSIONAL ENGINEER.

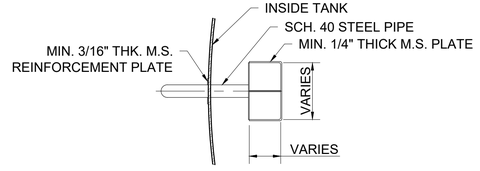

PLAN VIEW

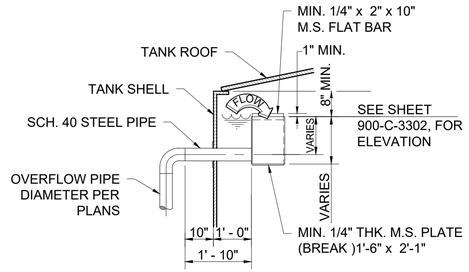

ELEVATION VIEW

TYPICAL OVERFLOW WEIR DETAIL
NOT TO SCALE

NOTE:
DIMENSIONS OF WEIR AND APPURTENANCES PROVIDED ARE MINIMUMS. ACTUAL DIMENSIONS MAY BE LARGER TO PROVIDE FOR DESIGN FLOW RATES SPECIFIED IN THE TECHNICAL SPECIFICATIONS. ACTUAL WEIR DIMENSIONS SHALL BE PROVIDED AS PART OF THE TANK MANUFACTURER'S PROFESSIONAL ENGINEER SEALED DESIGN.

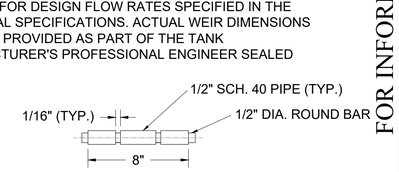

HINGE DETAIL - 2 EA. REQ'D

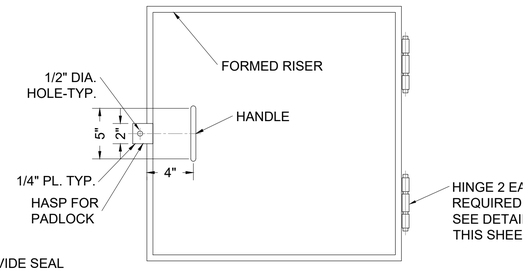

PLAN VIEW

30" SQUARE ROOF HATCH DETAIL
NOT TO SCALE

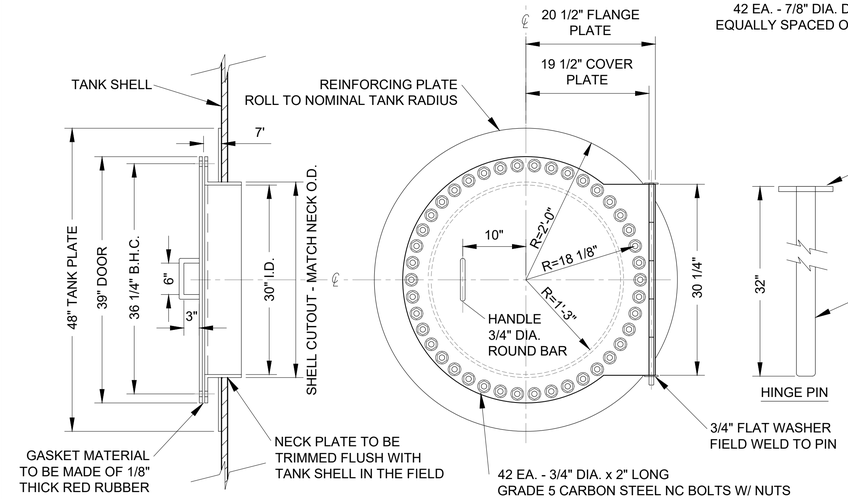

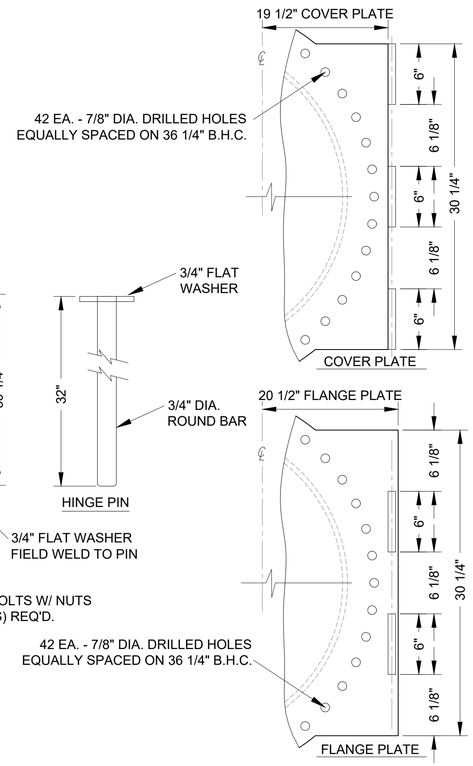

TYPICAL 30" MANWAY DETAIL
NOT TO SCALE

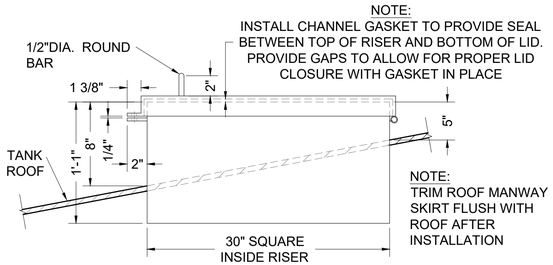

NOTE:
INSTALL CHANNEL GASKET TO PROVIDE SEAL BETWEEN TOP OF RISER AND BOTTOM OF LID. PROVIDE GAPS TO ALLOW FOR PROPER LID CLOSURE WITH GASKET IN PLACE

NOTE:
TRIM ROOF MANWAY SKIRT FLUSH WITH ROOF AFTER INSTALLATION

ELEVATION VIEW

30" SQUARE ROOF HATCH DETAIL
NOT TO SCALE

FOR INFORMATION ONLY

ALWAYS THINK SAFETY

U.S. DEPARTMENT OF THE INTERIOR
BUREAU OF RECLAMATION
NAVAJO-GALLUP WATER SUPPLY PROJECT
NEW MEXICO

CUTTER LATERAL - REACH 21

WATER PIPELINE

NO.	DATE	REVISION	BY	APV'D
1	10/28/20	CONSTRUCTION ASBUILT	AAV	TTT
0	12/10/2018	ISSUED FOR CONSTRUCTION	TT	JG

T Tadano
DESIGNED
M Howard / A Vogenthaler
DRAWN
J Garcia
CHECKED
TECH. APPR.
APPROVED
ADMIN APPROVAL - TITLE
FARMINGTON, NM 2020-10-28

CONSTRUCTION AS BUILT

REACH 21 PIPELINE

TYPICAL WATER STORAGE TANK DETAILS (1 of 2)

900-C-3303

SHEET 395 OF 405

DATE AND TIME PLOTTED
10/28/20
PLOTTED BY
aav

CAD SYSTEM
AUTOCAD
CAD FILENAME
Reach 21Tank Details DR As Built.dwg

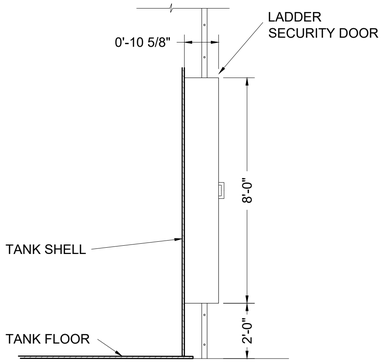

SIDE VIEW
NOT TO SCALE

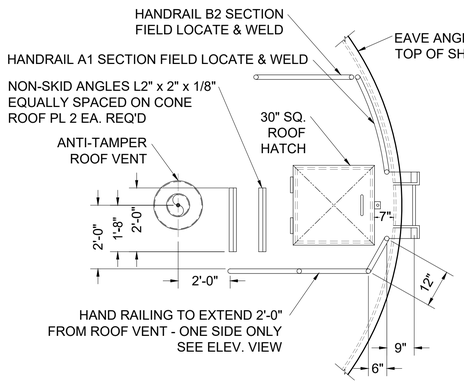

PLAN VIEW
NOT TO SCALE

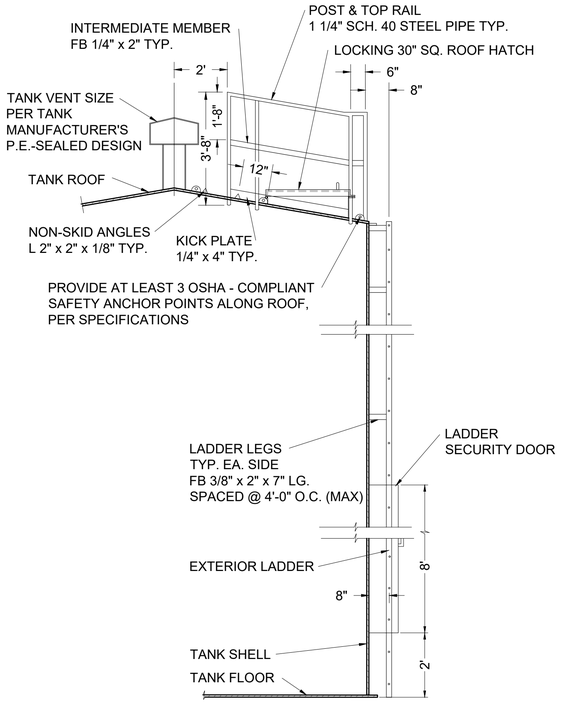

TANK CUTAWAY ELEVATION VIEW

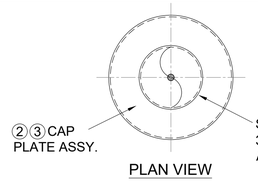

PLAN VIEW

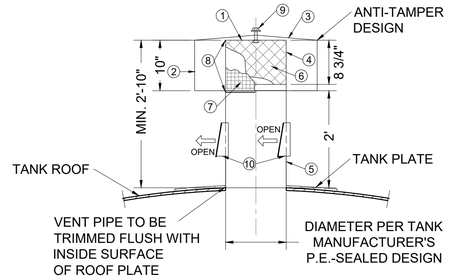

VERTICAL C/L OF TANK AND VENT WITH
FROST PROOF DOORS
NOT TO SCALE

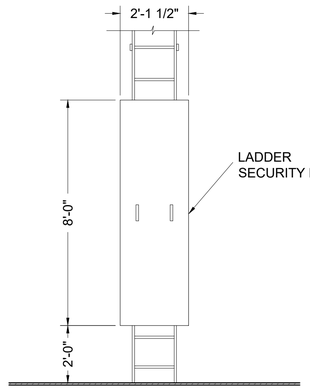

FRONT VIEW
NOT TO SCALE

LADDER SECURITY DOOR DETAILS
NOT TO SCALE

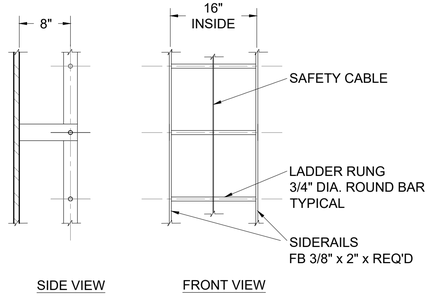

SIDE VIEW FRONT VIEW

LADDER DETAILS
NOT TO SCALE

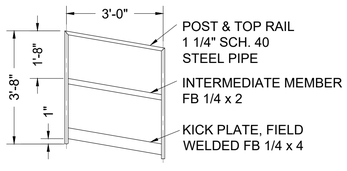

HANDRAIL B2 DETAIL
NOT TO SCALE

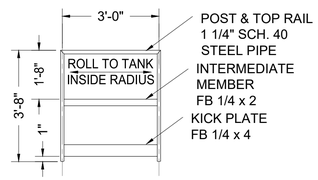

HANDRAIL A1 DETAIL - ONE REQ'D
NOT TO SCALE

BILL OF MATERIALS		
ITEM	QTY.	DESCRIPTION
①	1	3/16" THK. M.S. PLATE (CUT) 1' - 0" 3/4" Ø
②	1	10 GA. H.R. SHEET (ROLL) 10" x 6' - 3 3/8"
③	1	12 GA. H.R. SHEET (CUT) 2' - 0" Ø
④	3	3/16" x 1" M.S. FLAT BAR x 8 9/16"
⑤	1	1/4" THK. M.S. PLATE (ROLL) 16" x 3' - 2 1/2"
⑥	1	3/4 - #9 FLAT EXP. METAL (ROLL) 8 3/4" x 3' - 4"
⑦	1	24 MESH SCREEN (SST) 12" x 3' - 7"
⑧	2	STAINLESS STEEL WORM CLAMP (SST) 3/4" x 3' - 7"
⑨	1	1/2" x 3" HEX BOLT WITH (GRADE 2) NUT, & FLAT WASHER
⑩	4	6" x 8" FREEZE PROTECTION DOOR

12" VERTICAL ROOF DETAIL
NOT TO SCALE

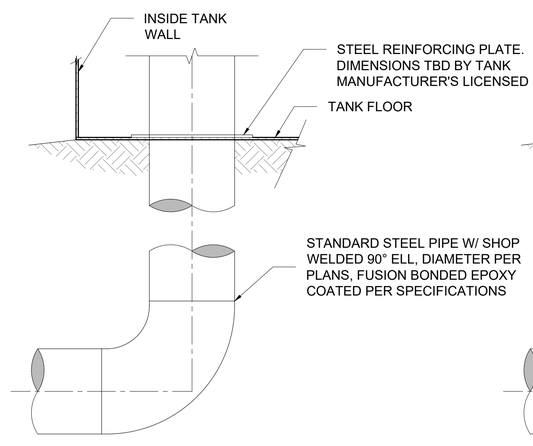

ELEVATION VIEW

32" INLET DETAIL
NOT TO SCALE

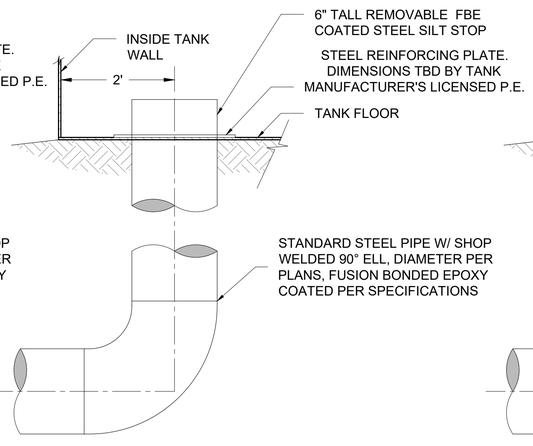

ELEVATION VIEW

20" OUTLET DETAIL
NOT TO SCALE

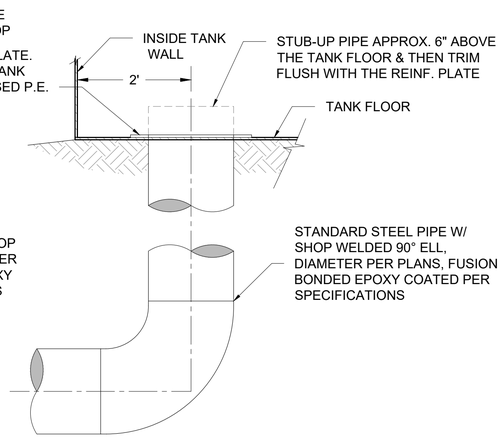

ELEVATION VIEW

20" TANK FLOOR DRAIN DETAIL
NOT TO SCALE

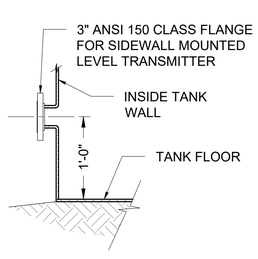

3" SIDEWALL FLANGE
CONNECTION DETAIL
NOT TO SCALE

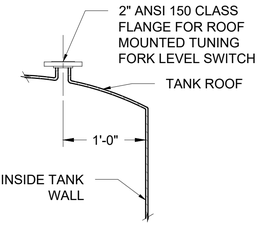

2" ROOF FLANGE
CONNECTION DETAIL
NOT TO SCALE

FOR INFORMATION ONLY

ALWAYS THINK SAFETY

RECLAMATION
Managing Water in the West

SMA
Engineering • Environmental Surveying

U.S. DEPARTMENT OF THE INTERIOR
BUREAU OF RECLAMATION

NAVAJO-GALLUP WATER SUPPLY PROJECT
NEW MEXICO

CUTTER LATERAL - REACH 21

WATER PIPELINE

NO.	DATE	REVISION		
1	10/28/20	CONSTRUCTION ASBUILT	AAV	TTT
0	12/10/2018	ISSUED FOR CONSTRUCTION	BY	APVD

T Tadano
DESIGNED
M Howard / A Vogenthaler
DRAWN
J Garcia
CHECKED
TECH. APPR.
APPROVED
SURFACE MATERIAL - TITLE
FARMINGTON, NM 2020-10-28

CONSTRUCTION
AS BUILT

REACH 21 PIPELINE

TYPICAL WATER
STORAGE TANK DETAILS
(2 of 2)

900-C-3304

SHEET 396 OF 405

DATE AND TIME PLOTTED
10/28/20
PLOTTED BY
aav

CAD SYSTEM
AUTOCAD
CAD FILENAME
Reach 21Tank Details DR As Built.dwg

GENERAL NOTES

1. REFER TO SPECIFICATION 13 34 20 FOR STRUCTURAL DETAILS ON PREFABRICATED BUILDING.
2. PROVIDE ELECTRICAL EQUIPMENT AS SPECIFIED IN 33 05 16.13.

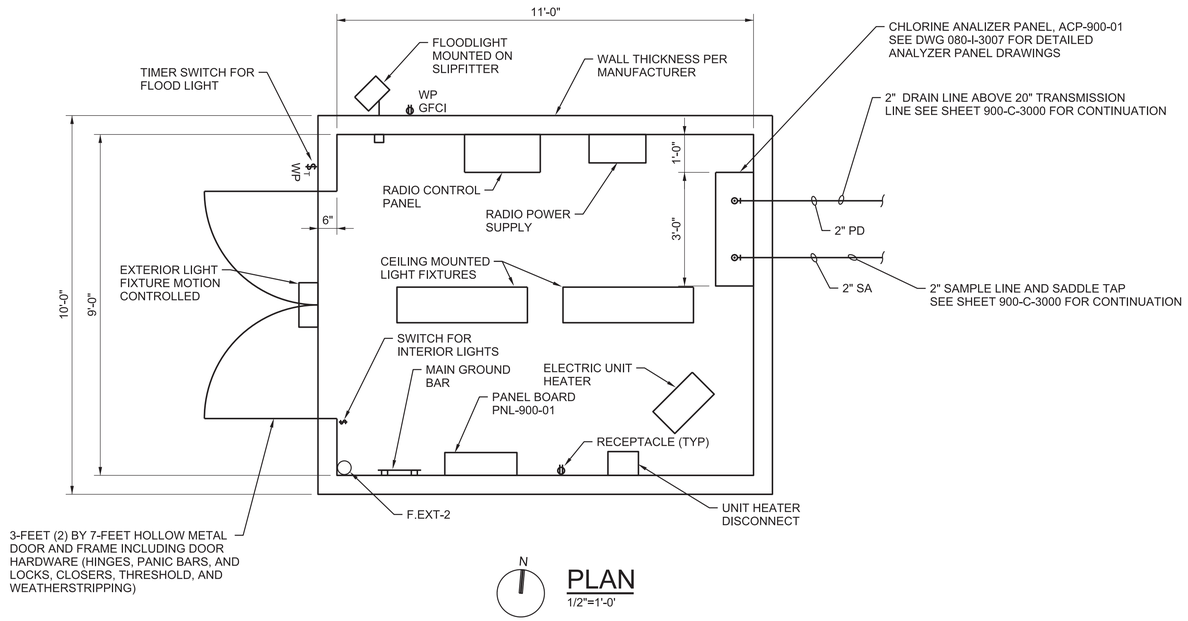

PLAN
1/2"=1'-0'

RECLAMATION
Managing Water in the West

ch2m

VERIFY SCALE
BAR IS ONE INCH ON ORIGINAL DRAWING.
0 1"

FOR INFORMATION ONLY

ALWAYS THINK SAFETY

U.S. DEPARTMENT OF THE INTERIOR
BUREAU OF RECLAMATION
NAVAJO-GALLUP WATER SUPPLY PROJECT
NEW MEXICO

CUTTER LATERAL - REACH 21

WATER TREATMENT PLANT

RECORD DRAWINGS
CH2M HILL CONSTRUCTORS, INC.
Revisions Drawn By
Date APRIL 2021
THESE RECORD DRAWINGS HAVE BEEN PREPARED, IN PART, ON THE BASIS OF INFORMATION COMPILED BY OTHERS. THEY ARE NOT INTENDED TO REPRESENT IN DETAIL THE EXACT LOCATION, TYPE OF COMPONENT NOR MANNER OF CONSTRUCTION. THE ENGINEER WILL NOT BE RESPONSIBLE FOR ANY ERRORS OR OMISSIONS WHICH HAVE BEEN INCORPORATED INTO THE RECORD DRAWINGS.

NO.	DATE	REVISION	BY	APVD

S MENK — DESIGNED
E ARMIJO — DRAWN
J HONEA — CHECKED
S MENK — TECH. APPR.
J PETERSON — APPROVED
ADMIN APPROVAL -

FARMINGTON, NM — FEBRUARY 2019

THIS DOCUMENT IS AN ELECTRONIC COPY. ORIGINAL DOCUMENT WAS ISSUED AND SEALED ON 02/13/2019, THE ORIGINAL DOCUMENT IS STORED AT THE OFFICES OF CH2M HILL CONSTRUCTORS, INC. ENGLEWOOD, CO.

TANK 3 SUPPORT FACILITY

PROCESS PLAN

900-D-2001

SHEET 401 OF 405

DATE PLOTTED 3/27/2021
TIME PLOTTED 11:59:43 AM
CAD SYSTEM
CAD FILENAME 900-D-2001_682853.dgn

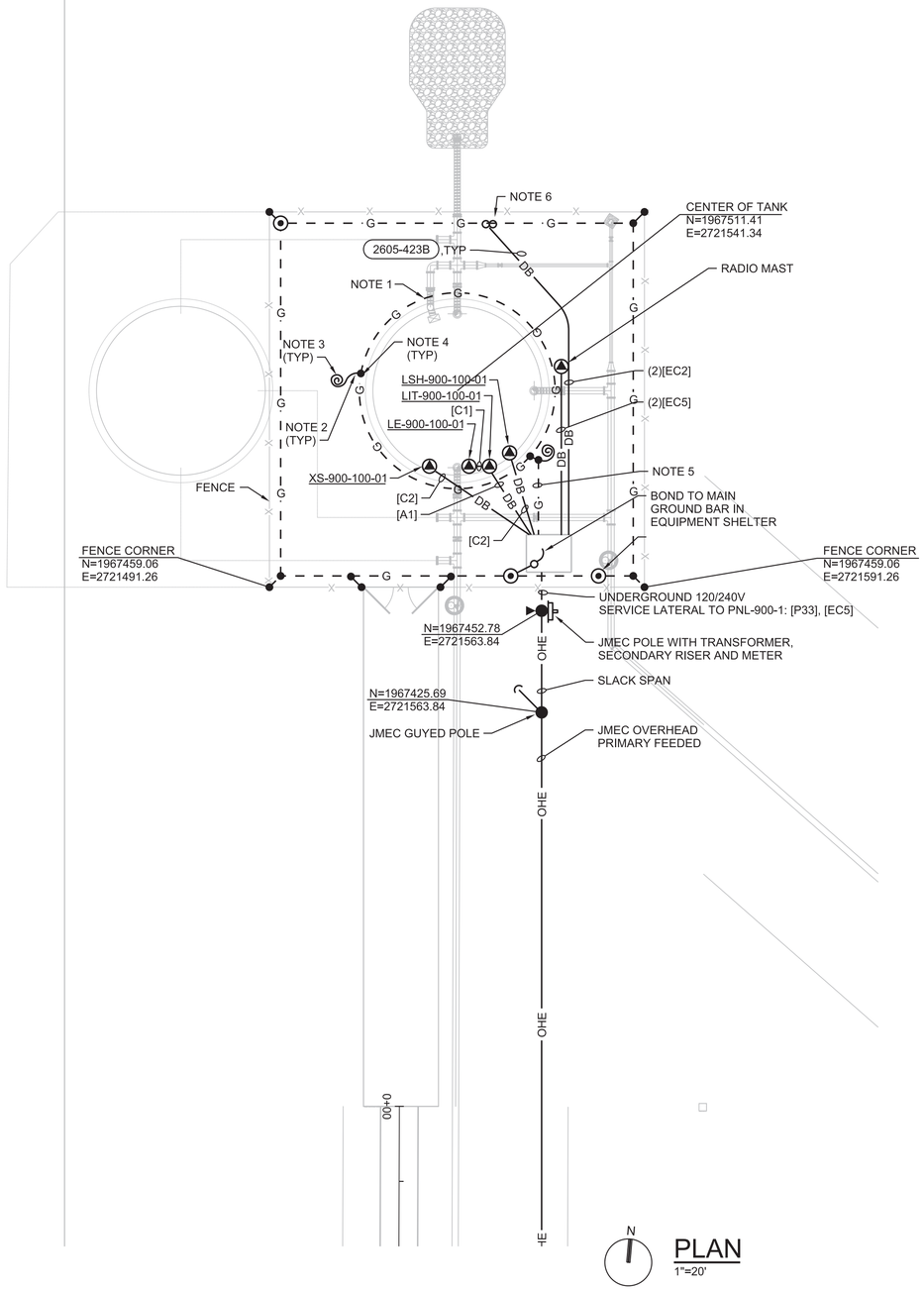

GENERAL NOTES

1. TANK SITE GROUNDING ELECTRODE SYSTEM: 4/0 AWG BARE COPPER WIRE EMBEDDED IN LOWER 1/3 OF TANK FOUNDATION. INSTALL WITH MINIMUM 3 INCHES OF CONCRETE COVER.
2. GROUND CONNECTION PLATE: NEMA 4 HOLE, WITH COMPRESSION CONNECTION SUITABLE FOR 4/0 AWG WIRE. BURNDY YGF OR APPROVED EQUAL. INSTALL ON THE VERTICAL FACE OF THE FOUNDATION, 6 INCHES BELOW TOC.
3. PIGTAIL: 4/0 AWG BARE COPPER WIRE.
4. EXOTHERMIC CONNECTION.
5. GROUNDING ELECTRODE CONDUCTOR: DIRECT-BURIED 4/0 AWG COPPER WIRE FROM PNL-900-1 GROUND BUS TO PIGTAIL CONNECTED TO TANK SITE GROUNDING ELECTRODE SYSTEM.
6. CONDUIT FOR HEAT TRACE SYSTEM. SWEEP CONDUIT UP AND TERMINATE 12 INCHES ABOVE GRADE, CAP.

RECLAMATION
Managing Water in the West

ch2m

VERIFY SCALE
BAR IS ONE INCH ON ORIGINAL DRAWING.
0 1"

FOR INFORMATION ONLY

ALWAYS THINK SAFETY

U.S. DEPARTMENT OF THE INTERIOR
BUREAU OF RECLAMATION
NAVAJO-GALLUP WATER SUPPLY PROJECT
NEW MEXICO

CUTTER LATERAL - REACH 21

WATER TREATMENT PLANT

RECORD DRAWINGS

CH2M HILL CONSTRUCTORS, INC. Date APRIL 2021

Revisions Drawn By

THESE RECORD DRAWINGS HAVE BEEN PREPARED, IN PART, ON THE BASIS OF INFORMATION COMPILED BY OTHERS. THEY ARE NOT INTENDED TO REPRESENT IN DETAIL THE EXACT LOCATION, TYPE OF COMPONENT NOR MANNER OF CONSTRUCTION. THE ENGINEER WILL NOT BE RESPONSIBLE FOR ANY ERRORS OR OMISSIONS WHICH HAVE BEEN INCORPORATED INTO THE RECORD DRAWINGS.

NO.	DATE	REVISION	BY	APVD

J LANDMAN — DESIGNED
A CUGLIAT — DRAWN
M GUPTA — CHECKED
J LANDMAN — TECH. APPR.
J PETERSON — APPROVED ADMIN APPROVAL -

FARMINGTON, NM FEBRUARY 2019

THIS DOCUMENT IS AN ELECTRONIC COPY. ORIGINAL DOCUMENT WAS ISSUED AND SEALED ON 02/13/2019, THE ORIGINAL DOCUMENT IS STORED AT THE OFFICES OF CH2M HILL CONSTRUCTORS, INC. ENGLEWOOD, CO.

TANK 3 SUPPORT FACILITY

ELECTRICAL PLAN

900-E-2001

SHEET 402 OF 405

DATE PLOTTED 3/27/2021
TIME PLOTTED 11:59:42 AM
CAD SYSTEM
CAD FILENAME 900-E-2001_882853.dgn

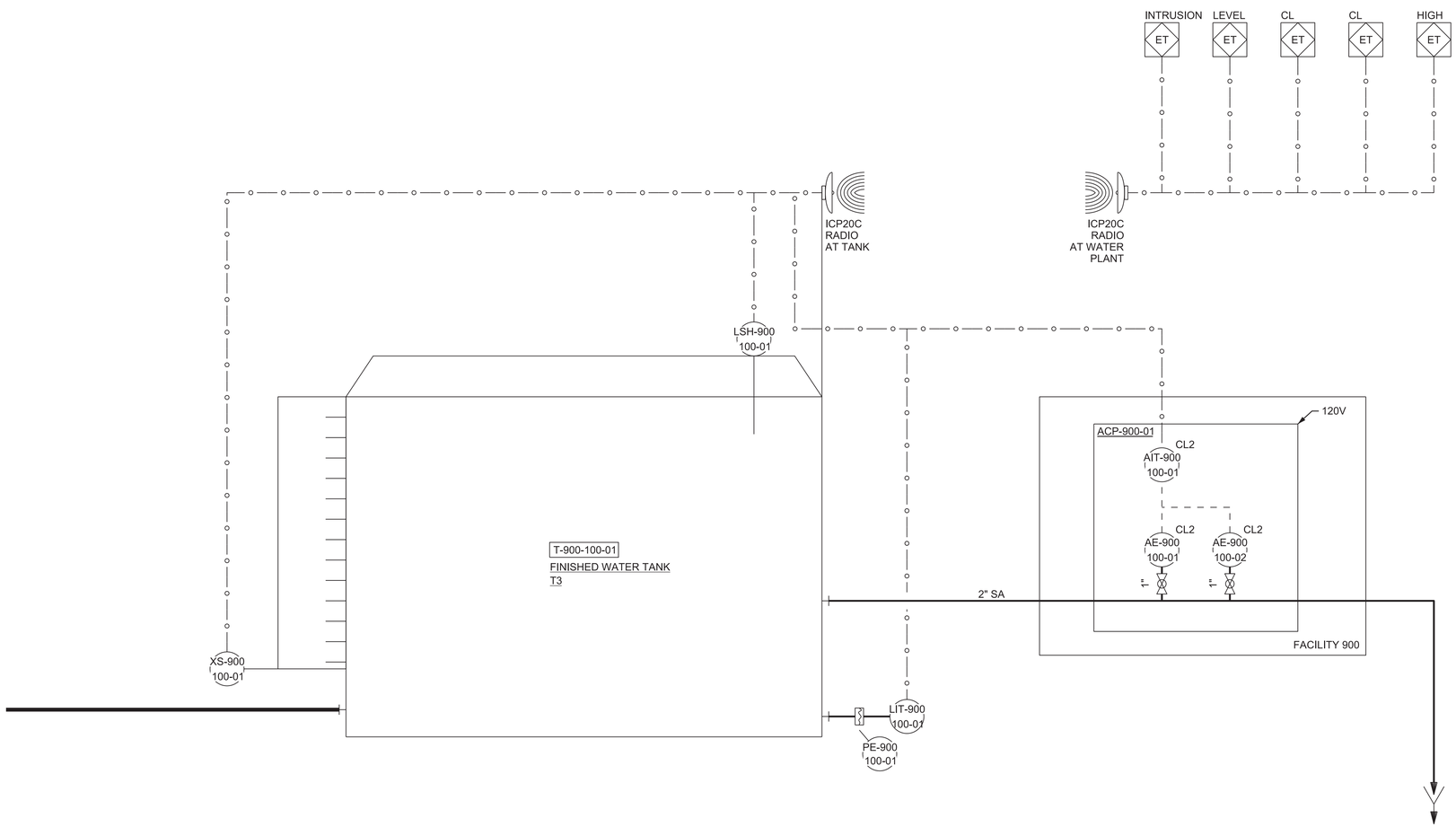

FOR INFORMATION ONLY

RECLAMATION
Managing Water in the West

ch2m

VERIFY SCALE

BAR IS ONE INCH ON ORIGINAL DRAWING.
0 1"

ALWAYS THINK SAFETY

U.S. DEPARTMENT OF THE INTERIOR
BUREAU OF RECLAMATION
NAVAJO-GALLUP WATER SUPPLY PROJECT
NEW MEXICO

CUTTER LATERAL - REACH 21

WATER TREATMENT PLANT

NO.	DATE	REVISION	BY	APVD
0	02/13/2019	ISSUED FOR CONSTRUCTION	MK	JP

D THOMAS
DESIGNED
S FLASKA
DRAWN
A ELLIS
CHECKED
J LANDMAN
TECH. APPR.
J PETERSON
APPROVED
ADMIN APPROVAL -

FARMINGTON, NM FEBRUARY 2019

TANK 3 SUPPORT FACILITY

FINISHED WATER P&ID

900-I-0001

SHEET 404 *OF* 405

DATE PLOTTED 1/29/2019
TIME PLOTTED 9:44:01 PM

CAD SYSTEM
CAD FILENAME 900-I-0001_682853.dgn

DRAWING INDEX			
RADIO PANELS			
LCP-900-01 T3 RADIO PANEL			
DRAWING	**SHEET**	**DRAWING TITLE**	
LCP90001-00	01	T3 RADIO PANEL LCP-900-01	DRAWING INDEX
LCP90001-01	02	T3 RADIO PANEL LCP-900-01	CABINET LAYOUT
LCP90001-02	03	T3 RADIO PANEL LCP-900-01	POWER DISTRIBUTION
LCP90001-03	04	T3 RADIO PANEL LCP-900-01	CABINET LAYOUT DETAILS
LCP90001-04	05	T3 RADIO PANEL LCP-900-01	DI WIRING DIAGRAM
LCP90001-05	06	T3 RADIO PANEL LCP-900-01	AI WIRING DIAGRAM
LCP90001-06	07	T3 RADIO PANEL LCP-900-01	SURGE SUPPRESSOR ENCLOSURE DETAIL
LCP90001-07	08	T3 RADIO PANEL LCP-900-01	NETWORK DIAGRAM

RECLAMATION
Managing Water in the West

ch2m

VERIFY SCALE

BAR IS ONE INCH ON ORIGINAL DRAWING.
0 1"

FOR INFORMATION ONLY

ALWAYS THINK SAFETY

U.S. DEPARTMENT OF THE INTERIOR
BUREAU OF RECLAMATION
NAVAJO-GALLUP WATER SUPPLY PROJECT
NEW MEXICO

CUTTER LATERAL - REACH 21

WATER TREATMENT PLANT

NO.	DATE	REVISION	BY	APVD
0	04/24/2019	ISSUED FOR FABRICATION PRICING		
1	05/30/2019	UPDATED FOR FABRICATION PRICING		

M GONZALEZ
DESIGNED
J MARTINEZ
DRAWN
E McDANIEL
CHECKED
J KANYUCH
TECH. APPR.
J PETERSON
APPROVED
ADMIN APPROVAL -

FARMINGTON, NM FEBRUARY 2019

I&C

T3 RADIO PANEL
LCP-900-01
DRAWING INDEX

LCP90001-00

SHEET 01 *OF* 08

DATE PLOTTED 1/28/2021
TIME PLOTTED 1:31:16 PM

CAD SYSTEM
CAD FILENAME LCP90001_00_682853.dgn

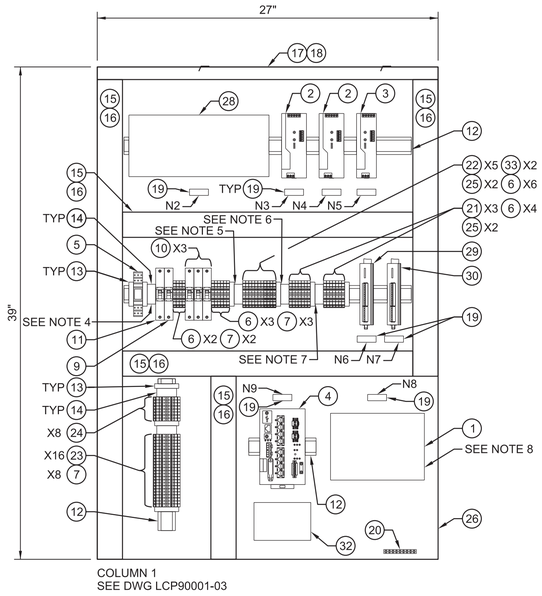

COLUMN 1
SEE DWG LCP90001-03

PANEL INTERNAL ELEVATION

2"=1'-0'

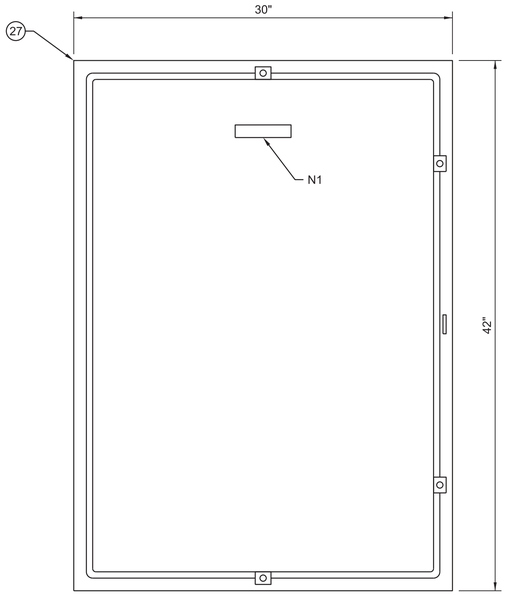

ENCLOSURE ELEVATION

2"=1'-0'

BILL OF MATERIALS

ITEM	QTY	MANUFACTURER	PART NUMBER	DESCRIPTION
1	1	WINNCOM	POE_INJ_AO_2DC_24V_48	POE INJECTOR, REDUNDANT DC INPUT (SEE NOTE 3)
2	2	PHOENIX CONTACT	2904610	48VDC POWER SUPPLY, 5A
3	1	PHOENIX CONTACT	2866750	24VDC POWER SUPPLY, 5A
4	1	CISCO	IE-3200-8T2S-E	NETWORK SWITCH, 48VDC DUAL INPUT POWER (SEE NOTE 3)
5	1	PHOENIX CONTACT	2907918	SURGE PROTECTIVE DEVICE W/ BASE
6	19	PHOENIX CONTACT	3007327	SINGLE LEVEL TERMINAL BLOCKS WHITE
7	13	PHOENIX CONTACT	0441504	GROUND TERMINAL BLOCKS GRN/YEL
8	AS REQ'D	-	-	TERMINAL BLOCK JUMPER
9	1	ALLEN BRADLEY	1489-M1C150	15AMP CIRCUIT BREAKER
10	3	ALLEN BRADLEY	1489-M1C100	10AMP CIRCUIT BREAKER
11	1	ALLEN BRADLEY	1489-M1C050	5AMP CIRCUIT BREAKER
12	AS REQ'D	ERICO	557850	DIN RAIL, 5.2MM HEIGHT
13	AS REQ'D	PHOENIX CONTACT	0800886	END CAP
14	AS REQ'D	PHOENIX CONTACT	0800310	TERMINAL STRIP MARKER
15	AS REQ'D	THOMAS & BETTS	TYD2X4WPG6	2" X 4" WIRING DUCT, GREY
16	AS REQ'D	THOMAS & BETTS	TYD2CPG6	2" WIDE WIRING DUCT COVER, GREY
17	AS REQ'D	THOMAS & BETTS	TYD1X4WPG6	1" X 4" WIRING DUCT, GREY
18	AS REQ'D	THOMAS & BETTS	TYD1CPG6	1" WIDE WIRING DUCT COVER, GREY
19	9	-	-	ENGRAVED NAMEPLATE BLACK WITH WHITE LETTERS
20	1	HOFFMAN	PGS2K	GROUND BAR
21	6	PHOENIX CONTACT	3046126	FUSED TERMINAL BLOCK - 60VDC
22	5	PHOENIX CONTACT	3046090	FUSED TERMINAL BLOCK - 24VDC
23	16	PHOENIX CONTACT	3044775	KNIFE DISCONNECT TERMINAL BLOCK, DOUBLE LEVEL
24	8	PHOENIX CONTACT	2774017	DOUBLE LEVEL TERMINAL BLOCKS - GRAY
25	6	BUSSMAN	GMA-3-R	3A FAST-ACTING, LOW BREAKING CAPACITY FUSE
26	1	SCE	42P30	39" X 27" BACKPANEL (SEE NOTE 2)
27	1	SCE	42H3010SSLP	ENCLOSURE, 42"H X 30"W X 10"D, NEMA 12
28	1	SOLA	SDU 850	UPS, DIN RAIL MOUNTAED, 850 VA
29	1	MOXA	IOLOGIK E1213	ETHERNET REMOTE I/O, 8 DISCRETE INPUTS 24VDC
30	1	MOXA	IOLOGIK E1240	ETHERNET REMOTE I/O, 8 ANALOG CURRENT INPUTS
31	AS REQ'D	PHOENIX CONTACT	3003020	SINGLE LEVEL TERMINAL BLOCK END COVER
32	1	WINNCOM	AA-0632-0	POE SURGE SUPPRESSOR, INDOOR (SEE NOTE 3)
33	2	BUSSMAN	GMA-500-R	1/2A FAST-ACTING, LOW BREAKING CAPACITY FUSE

LCP-900-01 CABINET BILL OF MATERIALS

NAMEPLATE SCHEDULE

ITEM	LINE 1	LINE 2	LINE 3	NAMEPLATE SIZE	LETTER SIZE	NOTES
N1	LCP-900-01			6" X 2"	5/16"	
N2	UPS-T3RAD01			1 1/2" X 1/2"	1/4"	
N3	PS48-1			1 1/2" X 1/2"	1/4"	
N4	PS48-2			1 1/2" X 1/2"	1/4"	
N5	PS24-1			1 1/2" X 1/2"	1/4"	
N6	DI INTERFACE			1 1/2" X 1/2"	1/4"	
N7	AI INTERFACE			1 1/2" X 1/2"	1/4"	
N8	T3RAD01			1 1/2" X 1/2"	1/4"	
N9	T3RADSW01			1 1/2" X 1/2"	1/4"	

GENERAL NOTES

1. CABINET LAYOUT DESIGNED USING FIRST NAMED MANUFACTURER LISTED IN THE BOM. IT IS THE CONTRACTORS RESPONSIBILITY TO UPDATE THE BOM AND CABINET LAYOUT USING SELECTED ITEM DIMENSIONS.
2. GROUND BACKPANEL TO ENCLOSURE.
3. CERAGON RADIO POE INJECTORS, SURGE SUPPRESSORS AND NETWORK SWITCH TO BE SUPPLIED BY OTHERS AND INSTALLED BY CONTRACTOR.
4. LABEL SHALL READ TB-AC.
5. LABEL SHALL READ TB-24VDC.
6. LABEL SHALL READ TB-48VDC-1.
7. LABEL SHALL READ TB-48VDC-2.
8. INSTALL CERAGON RADIO POE INJECTOR IN LOCATION SHOWN.

RECLAMATION
Managing Water in the West

ch2m

VERIFY SCALE
BAR IS ONE INCH ON ORIGINAL DRAWING.
0 1"

FOR INFORMATION ONLY

ALWAYS THINK SAFETY

U.S. DEPARTMENT OF THE INTERIOR
BUREAU OF RECLAMATION
NAVAJO-GALLUP WATER SUPPLY PROJECT
NEW MEXICO

CUTTER LATERAL - REACH 21

WATER TREATMENT PLANT

NO.	DATE	REVISION	BY	APVD
3	02/28/2020	ISSUED FOR CONSTRUCTION		
2	08/26/2019	UPDATED FOR FABRICATION		
1	05/30/2019	UPDATED FOR FABRICATION PRICING		
0	04/24/2019	ISSUED FOR FABRICATION PRICING		

M GONZALEZ
DESIGNED
J MARTINEZ
DRAWN
E McDANIEL
CHECKED
J KANYUCH
TECH. APPR.
J PETERSON
APPROVED
ADMIN APPROVAL -

FARMINGTON, NM FEBRUARY 2019

I&C

T3 RADIO PANEL
LCP-900-01
CABINET LAYOUT

LCP90001-01

SHEET 02 *OF* 08

DATE PLOTTED 1/28/2021
TIME PLOTTED 1:32:00 PM
CAD SYSTEM
CAD FILENAME LCP90001_01_682853.dgn

GENERAL NOTES

1. TERMINATE POWER CONDUCTORS FOR POE INJECTOR AS SHOWN.

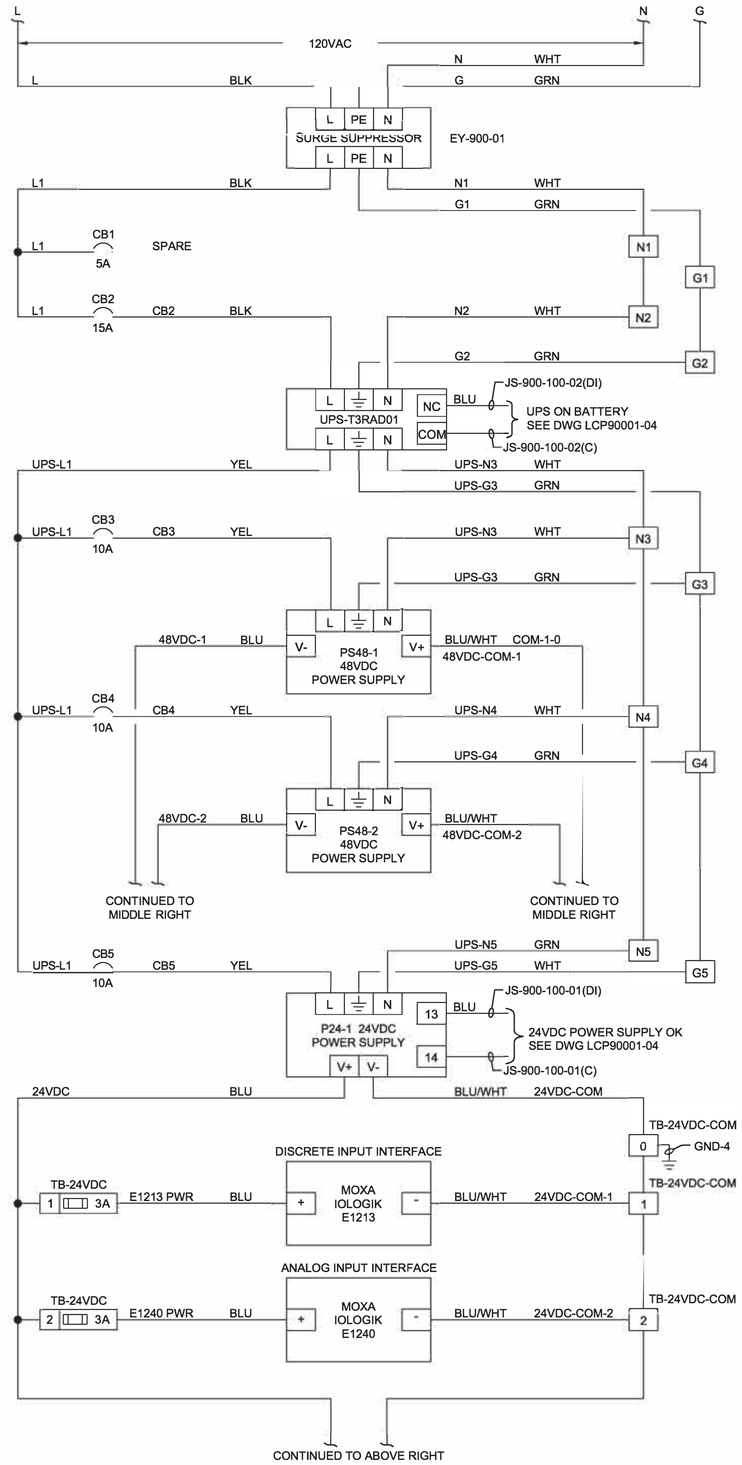

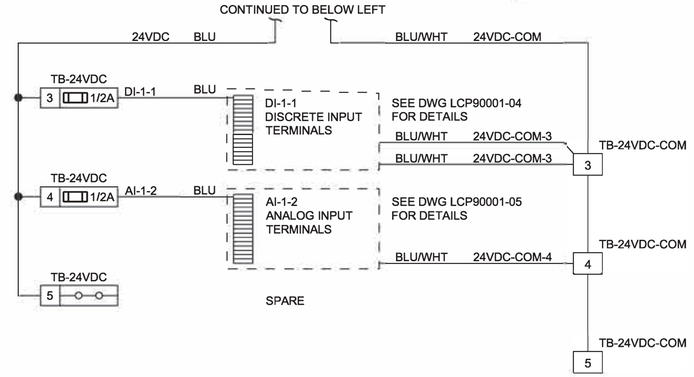

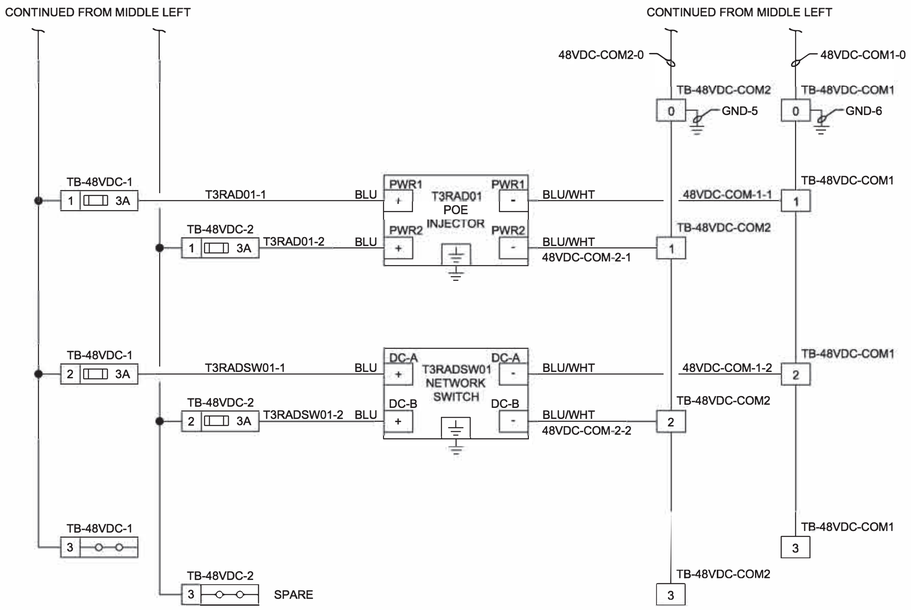

RECLAMATION
Managing Water in the West

ch2m:

VERIFY SCALE
BAR IS ONE INCH ON ORIGINAL DRAWING.
0 1"

FOR INFORMATION ONLY

ALWAYS THINK SAFETY

U.S. DEPARTMENT OF THE INTERIOR
BUREAU OF RECLAMATION
NAVAJO-GALLUP WATER SUPPLY PROJECT
NEW MEXICO

CUTTER LATERAL - REACH 21

WATER TREATMENT PLANT

NO.	DATE	REVISION	BY	APVD
2	02/20/2020	ISSUED FOR CONSTRUCTION		
1	05/30/2019	UPDATED FOR FABRICATION PRICING		
0	04/24/2019	ISSUED FOR FABRICATION PRICING		

M GONZALEZ
DESIGNED
J MARTINEZ
DRAWN
E McDANIEL
CHECKED
J KANYUCH
TECH. APPR.
J PETERSON
APPROVED
ADMIN APPROVAL -

FARMINGTON, NM FEBRUARY 2019

I&C

T3 RADIO PANEL
LCP-900-01
POWER DISTRIBUTION

LCP90001-02

SHEET 03 *OF* 08

DATE PLOTTED 1/28/2021
TIME PLOTTED 1:31:51 PM
CAD SYSTEM
CAD FILENAME LCP90001_02_682853.dgn

GENERAL NOTES

1. REFER TO DRAWING LCP90001-01 FOR ADDITIONAL DETAILS.

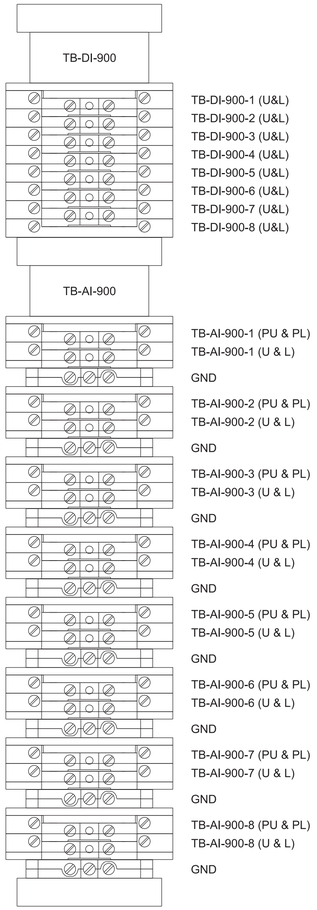

TB DETAILED LAYOUT

RECLAMATION
Managing Water in the West

ch2m

VERIFY SCALE

BAR IS ONE INCH ON ORIGINAL DRAWING.
0 1"

FOR INFORMATION ONLY

ALWAYS THINK SAFETY

U.S. DEPARTMENT OF THE INTERIOR
BUREAU OF RECLAMATION
NAVAJO-GALLUP WATER SUPPLY PROJECT
NEW MEXICO

CUTTER LATERAL - REACH 21

WATER TREATMENT PLANT

NO.	DATE	REVISION	BY	APVD
0	04/24/2019	ISSUED FOR FABRICATION PRICING		

M GONZALEZ
DESIGNED
J MARTINEZ
DRAWN
E McDANIEL
CHECKED
J KANYUCH
TECH. APPR.
J PETERSON
APPROVED
ADMIN APPROVAL -

FARMINGTON, NM FEBRUARY 2019

I&C

T3 RADIO PANEL
LCP-900-01
CABINET LAYOUT DETAILS

LCP90001-03

SHEET 04 *OF* 08

DATE PLOTTED 1/28/2021
TIME PLOTTED 1:32:32 PM

CAD SYSTEM
CAD FILENAME LCP90001_03_682853.dgn

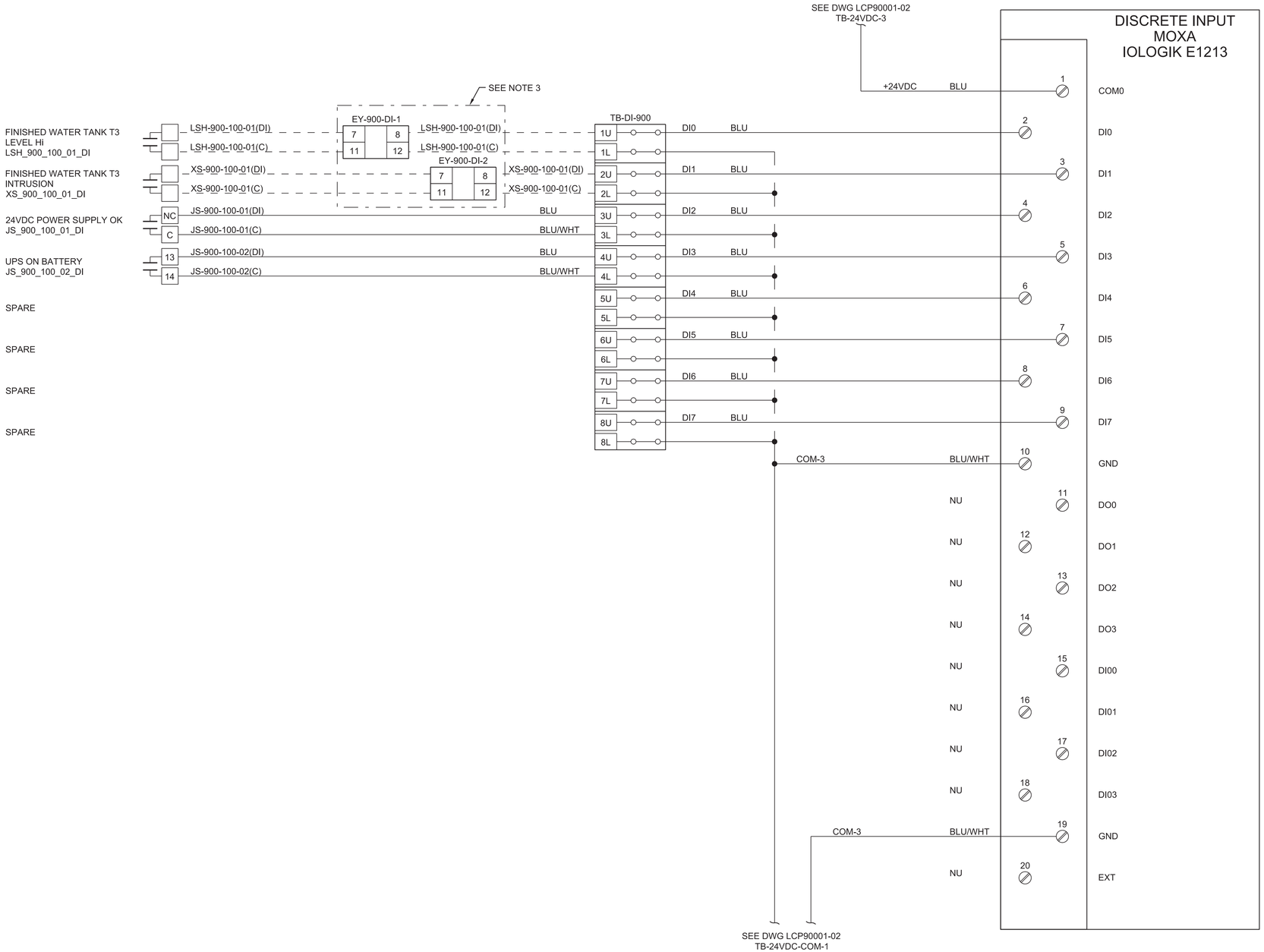

GENERAL NOTES

1. DASHED LINES INDICATE FIELD CONNECTIONS.
2. USE #14 AWG, 600 VOLT CONDUCTORS.
3. SURGE SUPPRESSORS LOCATED IN SURGE SUPPRESSOR ENCLOSURE, MOUNTED ABOVE LCP-900-01.
4. NU - NOT USED

RECLAMATION
Managing Water in the West

ch2m

VERIFY SCALE
BAR IS ONE INCH ON ORIGINAL DRAWING.
0 1"

FOR INFORMATION ONLY

ALWAYS THINK SAFETY

U.S. DEPARTMENT OF THE INTERIOR
BUREAU OF RECLAMATION
NAVAJO-GALLUP WATER SUPPLY PROJECT
NEW MEXICO

CUTTER LATERAL - REACH 21

WATER TREATMENT PLANT

NO.	DATE	REVISION	BY	APVD
1	05/30/2019	UPDATED FOR FABRICATION PRICING		
0	04/24/2019	ISSUED FOR FABRICATION PRICING		

M GONZALEZ
DESIGNED
J MARTINEZ
DRAWN
E McDANIEL
CHECKED
J KANYUCH
TECH. APPR.
J PETERSON
APPROVED
ADMIN APPROVAL -

FARMINGTON, NM FEBRUARY 2019

I&C

T3 RADIO PANEL
LCP-900-01
DI WIRING DIAGRAM

LCP90001-04

SHEET 05 *OF* 08

DATE PLOTTED 1/28/2021
TIME PLOTTED 1:31:54 PM

CAD SYSTEM
CAD FILENAME LCP90001_04_682833.dgn

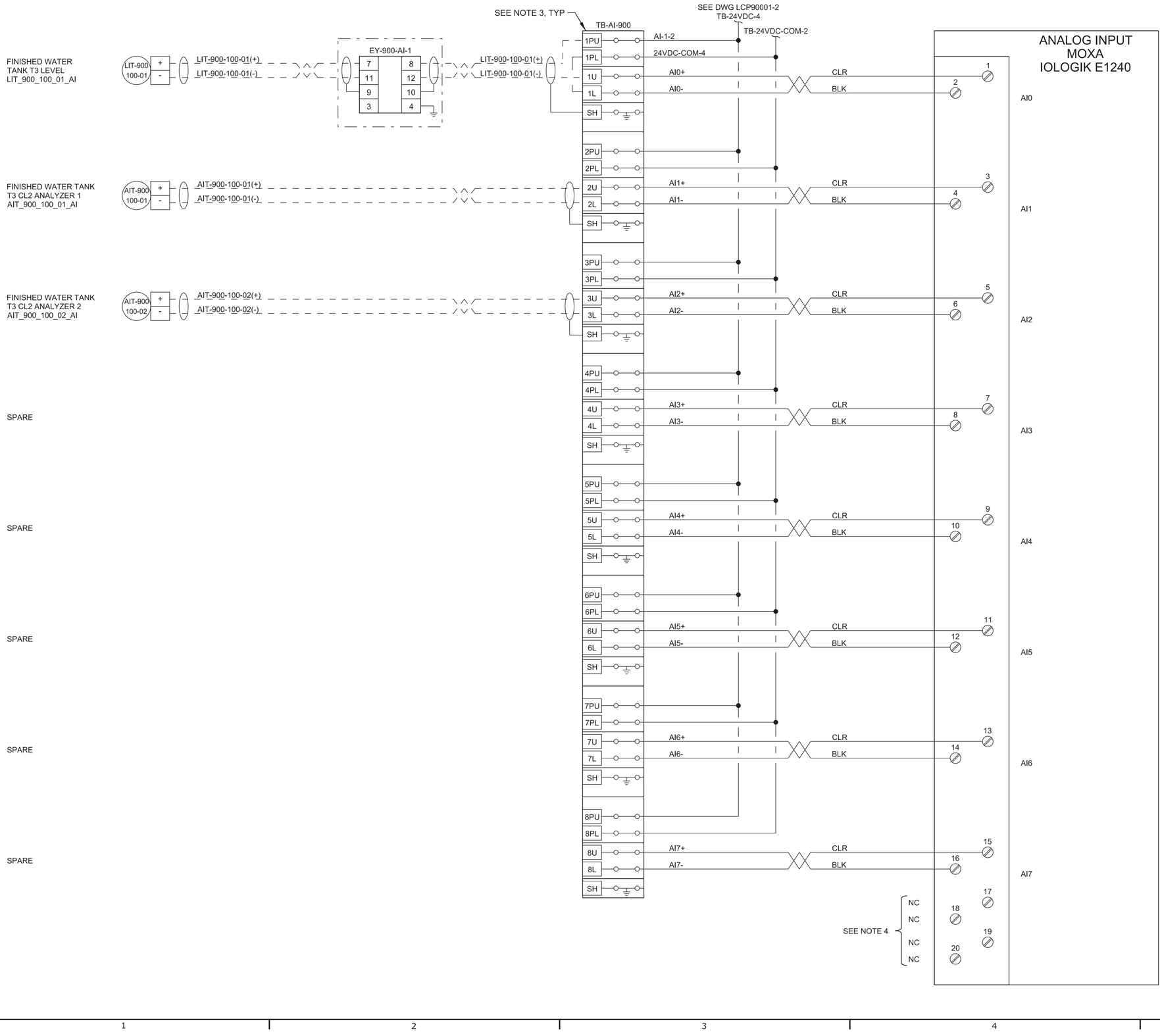

GENERAL NOTES

1. DASHED LINES INDICATE FIELD CONNECTIONS.
2. ALL SIGNALS ARE 4-20mA.
3. KNIFE DISCONNECT DOUBLE LEVEL TERMINAL BLOCK.
4. NC - NOT CONNECTED.
5. SURGE SUPPRESSORS LOCATED IN SURGE SUPPRESSOR ENCLOSURE, MOUNTED ABOVE LCP-900-01.

RECLAMATION
Managing Water in the West

ch2m:

VERIFY SCALE
BAR IS ONE INCH ON ORIGINAL DRAWING.
0 1"

FOR INFORMATION ONLY

ALWAYS THINK SAFETY

U.S. DEPARTMENT OF THE INTERIOR
BUREAU OF RECLAMATION
NAVAJO-GALLUP WATER SUPPLY PROJECT
NEW MEXICO

CUTTER LATERAL - REACH 21

WATER TREATMENT PLANT

NO.	DATE	REVISION	BY	APV'D
1	05/30/2019	UPDATED FOR FABRICATION PRICING		
0	04/24/2019	ISSUED FOR FABRICATION PRICING		

M GONZALEZ *DESIGNED*
J MARTINEZ *DRAWN*
E McDANIEL *CHECKED*
J KANYUCH *TECH. APPR.*
J PETERSON *APPROVED*
ADMIN APPROVAL -

FARMINGTON, NM FEBRUARY 2019

I&C

T3 RADIO PANEL
LCP-900-01
AI WIRING DIAGRAM

LCP90001-05

SHEET 06 *OF* 08

DATE PLOTTED 1/28/2021
TIME PLOTTED 1:31:39 PM
CAD SYSTEM
CAD FILENAME LCP90001_05_682853.dgn

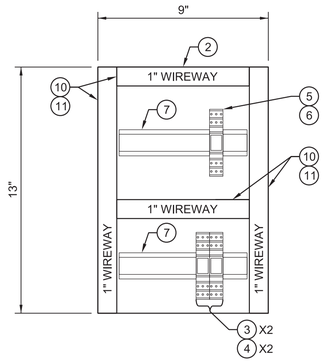

PANEL INTERNAL ELEVATION

3"=1'-0'

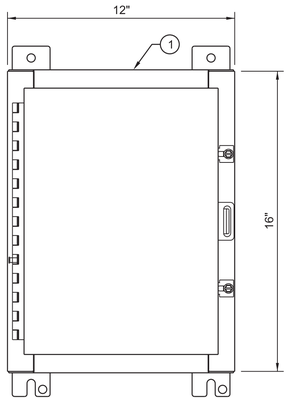

ENCLOSURE ELEVATION

3"=1'-0'

BILL OF MATERIALS				
ITEM	QTY	MANUFACTURER	PART NUMBER	DESCRIPTION
1	1	SCE	16H1208SSLP	ENCLOSURE, 16"H X 12"W X 8"D, NEMA 12
2	1	SCE	16P12	13" X 9" BACKPANEL (SEE NOTE 2)
3	2	PHOENIX CONTACT	2856087	DISCRETE SIGNAL SURGE SUPPRESSOR, PLUGTRAB PT 2X1
4	2	PHOENIX CONTACT	2856139	DISCRETE SIGNAL SURGE SUPPRESSOR BASE
5	1	PHOENIX CONTACT	2856032	ANALOG SIGNAL SURGE SUPPRESSOR, PLUGTRAB 1X2
6	1	PHOENIX CONTACT	2856126	ANALOG SIGNAL SURGE SUPPRESSOR BASE
7	AS REQ'D	PHOENIX CONTACT	0801733	DIN RAIL, 7.5MM HEIGHT
8	2	PHOENIX CONTACT	0441504	GROUND TERMINAL BLOCKS GRN/YEL
9	AS REQ'D	-	-	TERMINAL BLOCK JUMPER
10	AS REQ'D	PANDUIT	F1X4LG6	1" X 4" WIRING DUCT, GREY
11	AS REQ'D	PANDUIT	-	1" WIDE WIRING DUCT COVER, GREY

SURGE SUPPRESSOR ENCLOSURE BILL OF MATERIALS

GENERAL NOTES

1. ENCLOSURE LAYOUT DESIGNED USING FIRST NAMED MANUFACTURER LISTED IN BOM. IT IS THE CONTRACTORS RESPONSIBILITY TO UPDATE THE BOM AND LAYOUT USING SELECTED ITEM DIMENSIONS.
2. GROUND BACKPANEL TO ENCLOSURE.
3. MOUNT SURGE SUPPRESSOR ENCLOSURE ON WALL ABOVE LCP-900-01.

RECLAMATION
Managing Water in the West

ch2m.

VERIFY SCALE

BAR IS ONE INCH ON ORIGINAL DRAWING.
0 1"

FOR INFORMATION ONLY

ALWAYS THINK SAFETY

U.S. DEPARTMENT OF THE INTERIOR
BUREAU OF RECLAMATION
NAVAJO-GALLUP WATER SUPPLY PROJECT
NEW MEXICO

CUTTER LATERAL - REACH 21

WATER TREATMENT PLANT

NO.	DATE	REVISION	BY	APVD
0	04/24/2019	ISSUED FOR FABRICATION PRICING		

M GONZALEZ *DESIGNED*
J MARTINEZ *DRAWN*
E McDANIEL *CHECKED*
J KANYUCH *TECH. APPR.*
J PETERSON *APPROVED*
ADMIN APPROVAL -

FARMINGTON, NM FEBRUARY 2019

I&C

LCP-900-01
SURGE SUPPRESSOR
ENCLOSURE DETAIL

LCP90001-06

SHEET 07 *OF* 08

DATE PLOTTED 1/28/2021
TIME PLOTTED 1:32:06 PM

CAD SYSTEM
CAD FILENAME LCP90001_06_682833.dgn

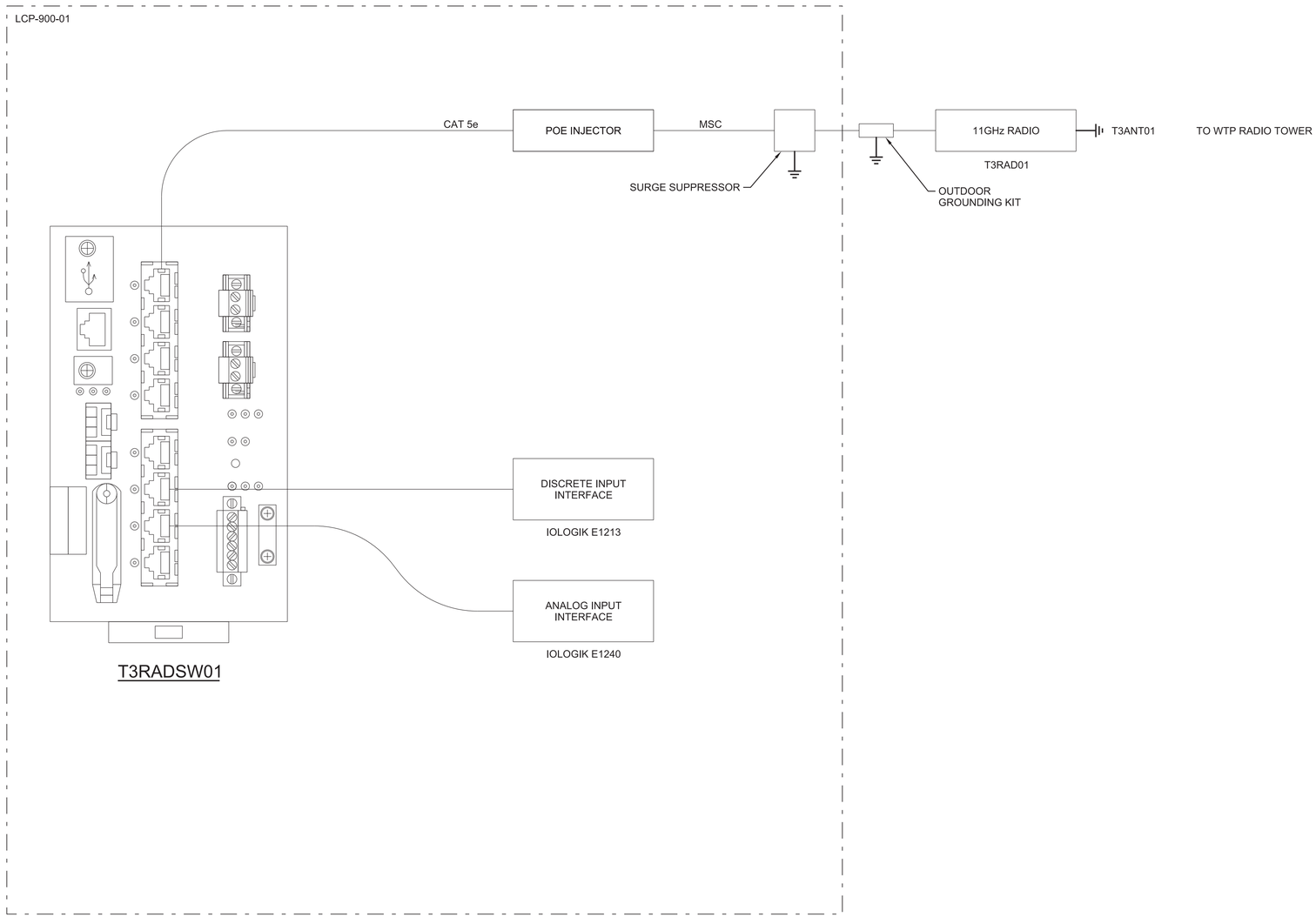

RECLAMATION
Managing Water in the West

ch2m

VERIFY SCALE
BAR IS ONE INCH ON ORIGINAL DRAWING.
0 1"

FOR INFORMATION ONLY

ALWAYS THINK SAFETY

U.S. DEPARTMENT OF THE INTERIOR
BUREAU OF RECLAMATION
NAVAJO-GALLUP WATER SUPPLY PROJECT
NEW MEXICO

CUTTER LATERAL - REACH 21

WATER TREATMENT PLANT

NO.	DATE	REVISION	BY	APVD
1	05/30/2019	UPDATED FOR FABRICATION PRICING		
0	04/24/2019	ISSUED FOR FABRICATION PRICING		

M GONZALEZ
DESIGNED
J MARTINEZ
DRAWN
E McDANIEL
CHECKED
J KANYUCH
TECH. APPR.
J PETERSON
APPROVED
ADMIN APPROVAL -

FARMINGTON, NM FEBRUARY 2019

I&C

T3 RADIO PANEL
LCP-900-01
NETWORK DIAGRAM

LCP90001-07

SHEET 08 *OF* 08

DATE PLOTTED 1/28/2021
TIME PLOTTED 11:32:57 PM
CAD SYSTEM
CAD FILENAME LCP90001_07_482853.dgn

IEEE STANDARD CONTROL & PROTECTION DEVICE FUNCTION NUMBERS

(SEE NOTES 1, 2, AND 3)

01___Master Element
02___Time-Delay Starting or Closing Relay (TDPU)
03___Checking or Interlocking Relay
04___Master Contactor
05___Stopping Device
06___Starting Circuit Breaker
07___Rate-of-Change Relay
08___Control Power Disconnecting Device
09___Reversing Device
10___Unit Sequence Switch
11___ Multifunction Device
12___Overspeed Device
13___Synchronous-speed Device
14___Underspeed Device
15___Speed or Frequency Matching Device
16___Reserved for future application
17___Shunting or Discharge Switch
18___Accelerating or Decelerating Device
19___Starting-to-Running Transition Contactor
20___Electrically Operated Valve
21___Distance Relay
22___Equalizer Circuit Breaker
23___Temperature Control Device
24___Volts Per Hertz Relay
25___Synchronizing or Synchronism-Check Device
26___Apparatus Thermal Device
27___Undervoltage Relay
28___Flame Detector
29___Isolating Contactor
30___Annunciator Relay
31___Separate Excitation Device
32___Directional Power Relay
33___Position Switch
34___Master Sequence Device
35___Brush-Operating or Slip-Ring Short-Circuiting Device
36___Polarity or Polarizing Voltage Device
37___Undercurrent or Underpower Relay
38___Bearing Protective Device
39___Mechanical Condition Monitor
40___Field Relay
41___Field Circuit Breaker
42___Running Circuit Breaker
43___Manual Transfer or Selector Device
44___Unit Sequence Starting Relay
45___Atmospheric Condition Monitor
46___Reverse-Phase or Phase-Balance Current Relay
47___Phase-Sequence Voltage Relay
48___Incomplete Sequence Relay
49___Machine or Transformer Thermal Relay
50___Instantaneous Overcurrent or Rate-of-Rise Relay
51___AC Time Overcurrent Relay
52___AC Circuit Breaker
53___Exciter or DC Generator Relay
54___Turning Gear Engaging Device
55___Power Factor Relay
56___Field Application Relay
57___Short-Circuiting or Grounding Device
58___Rectification Failure Relay
59___Overvoltage Relay
60___Voltage or Current Balance Relay
61___Density Switch or Sensor
62___Time-Delay Stopping or Opening Relay (TDDO)
63___Pressure Switch
64___Ground Detector Relay
65___Governor
66___Notching or Jogging Device
67___AC Directional Overcurrent Relay
68___Blocking Relay
69___Permissive Control Device
70___Rheostat
71___Level Switch
72___DC Circuit Breaker
73___Load-Resistor Contactor
74___Alarm Relay
75___Position Changing Mechanism
76___DC Overcurrent Relay
77___Pulse Transmitter
78___Phase-Angle Measuring or Out-of-Step Protective Relay
79___AC Reclosing Relay
80___Flow Switch
81___Frequency Relay
82___DC Reclosing Relay
83___Automatic Selective Control or Transfer Relay
84___Operating Mechanism
85___Carrier or Pilot-Wire Receiver Relay
86___Lockout Relay
87___Differential Protective Relay
88___Auxiliary Motor or Motor Generator
89___Line Switch
90___Regulating Device
91___Voltage Directional Relay
92___Voltage and Power Directional Relay
93___Field-Changing Contactor
94___Tripping or Trip-Free Relay
95___Reserved for future application
96___Reserved for future application
97___Reserved for future application
98___Creep Detector Device
99___Reserved for future application

FIRST LETTER SUFFIX OF THE DEVICE DESIGNATION

(SEE NOTES 1, 2, AND 3)

A____Governor System (or Actuator Systems--gates)
B____Battery Charging & Monitoring System
C____High-Voltage Cable System
D____Data Acquisition System
E____Excitation System including Transformer and Regulator but not Main Field
F____Fire and CO2 System
G____Main Generator including Auxiliary Systems
G/M___Generator Motor including Auxiliary Systems in Pumped Storage Applications
H____Turbine or Main Pump Including Auxiliary Systems
I____Isolated and Other Power Bus Systems (not High Voltage Cable)
J____Power Circuit Breaker including Auxiliary Systems
K____Power Transformer including Auxiliary Systems
L____Annunciator System, Security System
M____Main Pump Motor including Auxiliary Systems and Variable Speed Drive
N____Air (Pneumatic) System
O____Not used
P____Penstock or Discharge Line System
Q____Oil Storage, Handling, Purification System
R____Field Flashing System or Phase Reversal Switch including Auxiliary Systems
S____Station Service Substation System including Engine/Generator System
T____Tone and Transfer Trip System
U____Unit Control Circuit System or Uninterruptible Power Supply System
V____Intake and/or Discharge Valve System
W____Water Systems including Intake/Outlet Works and Plant Water and Sump Systems
X____Defined for systems unique to a facility
Y____Defined for systems unique to a facility
Z____Defined for systems unique to a facility

SECOND AND SUBSEQUENT LETTER SUFFIXES OF THE DEVICE DESIGNATION

(SEE NOTES 1, 2, AND 3)

A___Abnormal, A.C., Acceleration, Admission, Alarm, Amperes, Automatic, Auxiliaries, Phase A, etc.
B___Backup, Bearing, Block, Blower, Booster, Brakes, Bus, Button, Bypass, Phase B, etc.
C___Cable, Carrier, Charger, Check, Chlorination, Close, Collector, Common, Compensator, Compressor, Control, Cooling, Current, Cycle, Cylinder, Phase C, Conveyor, etc.
D___D.C., Deceleration, Delay, Depress, Detector, Dielectric, Differential, Discharge, Disconnect, Discordance, Domestic, Down, Downstream, Draft Tube, Drain, etc.
E___Ejector, Elevator, Emergency, Explosive, etc.
F___Failure, Fan, Fault, Feeder, Field, Filter, Fire, Flame, Flow, Follower, Forward, Frequency, Full, Fumes, Fuse, etc.
G___Gas, Gate, Gating (SCR), Generate, Ground, Guide Bearing, etc.
H___Halon, Hand, Heat, Heaters, High, Hoist, Horn, Hot, Housing, Hydropneumatic Tank, etc.
I___Indication, Initial, Inlet, Input, Instantaneous, Intake, Interface, Interlock, Interrupt, Inverter, Ionization, etc.
J___Jacking, Jet, etc.
K___Key, Transformer
L___Lamps, Left, Level, Lights, Limit, Line, Liquid, Local, Logic, Loss, Louvers, Low, Lower, Lubrication, etc.
M___Main, Malfunction, Manual, Meter, Metering, Motor, etc.
N___Negative, Network, Neutral, Normal, etc.
O___Open, Outlet, Output, etc.
P___Packing Box, Parallel, Parameter, Penstock, Phase, Phaseback, Pilot, Pit, Position, Positive, Potential, Pothead, Power, Pressure, Primary, Protection, Pulse, Pump, Purification, Push, etc.
Q___Oil, etc.
R___Raise, Reactor, Reclose, Record, Rectifier, Reed, Refrigeration, Regulate, Relay, Release, Relief, Remote, Reservoir, Reset, Resistor, Right, Rotation, Rotor, Runner, etc.
S___Seals, Secondary, Selector, Sewage, Shorting, Shutdown, Signal, Skimmer, Sludge, Smoke, Solenoid, Speed, Spiral or Scroll Case, Splice, Stabilizer, Standby, Starting, Stator, Stepping, Storage, Strainer, Suction, Sump, Supply, Switch, Synchronizing, etc.
T___Tank, Temperature, Test, Thermal, Thrust Bearing, Thyratron, Tie, Time, Transducer, Transfer, Transmitter, Trip, Trouble, Trashrake, etc.
U___Unit, Unloader, Unwatering, Up, Upper, Upstream, etc.
V___Valve, Vars, Vibration, Voltage, etc.
W___Water, Watts, Winding, etc.
X___Auxiliary Device, etc.
Y___Auxiliary to Device X, Antipump Relay. etc.
Z___Auxiliary to Device Y

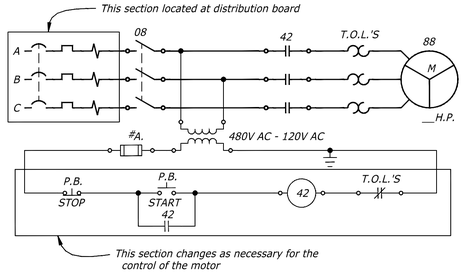

BASIC MOTOR CONTACTOR SCHEMATIC

DEVICE SYMBOLS

(SEE NOTES 5 AND 6)

- RELAY COIL, SOLENOID COIL OR CONTACTOR COIL
- INDICATING LAMP
- INDICATING METER
- RECORDING METER
- INTEGRATING METER
- TRANSFER SWITCH
- TRANSDUCER
- TELEMETRY
- TELEMETRY FOR REMOTE INDICATION
- (REC.-LOG.) TELEMETRY FOR REMOTE LOGGING AND/OR RECORDING
- (REC.-AGC.-LOG.) TELEMETRY FOR REMOTE RECORDING AND/OR LOGGING ASSOCIATED WITH AUTOMATIC GENERATION CONTROL
- MICROWAVE, TRANSMITTER-RECEIVER, FOR RELAYING (SEE NOTE 7)
- MICROWAVE, TRANSMITTER-RECEIVER, FOR SUPERVISORY CONTROL (SEE NOTE 7)
- MICROWAVE, TRANSMITTER-RECEIVER FOR TELEMETERING (SEE NOTE 7)
- REMOVABLE LINK
- DEVICE TERMINAL POINT (SEE NOTE 11)
- CONTACT, NORMALLY OPEN (SEE NOTE 8)
- CONTACT, NORMALLY CLOSED (SEE NOTE 8)
- PUSHBUTTON, NORMALLY CLOSED
- PUSHBUTTON, NORMALLY OPEN
- PUSHBUTTON, MAINTAINED
- CONTACTOR WITH THERMAL OVERLOAD TRIP ELEMENT
- CONTACTOR WITH MAGNETIC TRIP ELEMENT
- THERMAL OVERLOAD DEVICE
- MAGNETIC OVERLOAD DEVICE
- THERMOMAGNETIC OVERLOAD DEVICE
- TIME DELAY MAGNETIC OVERLOAD DEVICE
- FUSE
- FUSE, CURRENT LIMITING TYPE
- RESISTOR
- RESISTOR, VARIABLE
- RESISTOR, TAPPED
- VARISTOR
- THYRISTOR OR TRIAC
- DIODE
- ZENER DIODE
- SEMI-CONDUCTOR CONTROLLED RECTIFIER (SCR)
- RESISTANCE TEMPERATURE DETECTOR (RTD)
- INSTRUMENT SHUNT
- CAPACITOR

- REACTOR
- THERMOCOUPLE
- LIGHTNING OR SURGE ARRESTER
- PROTECTIVE GAP
- HORN GAP
- CABLE TERMINATION
- BELL
- HORN
- BUZZER
- CARRIER FREQUENCY WAVE TRAP
- MECHANICAL INTERLOCK
- KEY INTERLOCK
- ELECTRICAL INTERLOCK
- REPRESENTS CONNECTION FROM EXTERNAL EQUIPMENT, DOES NOT NECESSARILY REPRESENT A TERMINAL POINT
- SYNCHRO (SELF-SYNCHRONOUS) DEVICE FOR POSITION INDICATION OR CONTROL
- THREE-PHASE, 3-WIRE, DELTA
- THREE-PHASE, BROKEN DELTA
- THREE-PHASE, OPEN DELTA
- THREE-PHASE, Y (OR STAR), UNGROUNDED
- THREE-PHASE, Y (OR STAR), WITH NEUTRAL BROUGHT OUT AND GROUNDED
- THREE-PHASE, ZIG-ZAG, UNGROUNDED
- --- SEE NOTE 9 ---
- A.C. GENERATOR, MOTOR OR CONDENSER, BASIC SYMBOL
- SQUIRREL CAGE INDUCTION MOTOR
- SLIP-RING OR WOUND ROTOR INDUCTION MOTOR
- SYNCHRONOUS GENERATOR MOTOR OR CONDENSER WITH DIRECT CURRENT FIELD EXCITATION
- SYNCHRONOUS CONVERTER
- D.C. GENERATOR, MOTOR OR CONDENSER, BASIC SYMBOL
- D.C. GENERATOR, MOTOR OR CONDENSER WITH SHUNT AND SERIES FIELD
- SPLIT FIELD MOTOR
- DIRECT CONNECTED UNITS. USE BASIC AC OR DC GENERATOR OR MOTOR SYMBOLS
- USE MANUFACTURERS DIAGRAM ROTATING AMPLIFIER
- PERMANENT MAGNET GENERATOR
- SINGLE-PHASE TWO-WINDING TRANSFORMER
- POLYPHASE TRANSFORMER
- THREE-WINDING TRANSFORMER
- AUTOTRANSFORMER OR COMPENSATOR
- CONSTANT-CURRENT TRANSFORMER

- LOAD-RATIO CONTROL TRANSFORMER WITH TAPS
- STEP-VOLTAGE REGULATOR OR LOAD-RATIO CONTROL AUTOTRANSFORMER
- CURRENT TRANSFORMER (C.T.), WOUND TYPE
- CURRENT TRANSFORMER (C.T.), BUSHING TYPE
- POTENTIAL TRANSFORMER (P.T.)
- CAPACITOR-BUSHING POTENTIAL DEVICE
- CARRIER-COUPLING CAPACITOR POTENTIAL DEVICE
- TO CARRIER EQUIPMENT
- DISCONNECTING SWITCH, HOOK-STICK-OPERATED
- DISCONNECTING SWITCH, MANUALLY-GANG-OPERATED
- AIR-BREAK SWITCH, HORN GAP, MANUALLY-GANG-OPERATED
- DISCONNECTING SWITCH, MOTOR-OPERATED
- INTERRUPTER SWITCH
- MANUALLY OPENED, ELECTRICALLY TRIPPED GROUNDING SWITCH
- FUSED DISCONNECT SWITCH
- POWER CIRCUIT BREAKER
- POWER CIRCUIT BREAKER, DRAWOUT TYPE
- AIR CIRCUIT BREAKER
- AIR CIRCUIT BREAKER, DRAWOUT TYPE
- AIR CIRCUIT BREAKER WITH ELECTRICAL TRIP
- 3-POLE CIRCUIT BREAKER WITH THERMAL-OVERLOAD DEVICE OR INVERSE-TIME-TRIP ELEMENT IN ALL 3 POLES
- 3-POLE CIRCUIT BREAKER WITH MAGNETIC-OVERLOAD DEVICE OR INSTANTANEOUS-TRIP ELEMENT IN ALL 3 POLES

NOTES

1. Select the most appropriate ANSI device function number which identifies the device used by function and the most appropriate suffix letters which further identify the device by system, subsystem, quantity or condition monitored or controlled.

   Examples: 127UC....Unit 1 Unit Control Bus Undervoltage Relay
   251EF....Unit 2 Exciter Field Time Delay Overcurrent Relay
   71WSH....Plant Sump High Water Level Switch

2. Device numbers 1 through 99 are used for the overall plant and switchyard operation. Device numbers 101 through 199, 201 through 299, 301 through 399, etc. are used for Units 1, 2, 3, etc. Device numbers prefixed by letters RE indicates devices controlled by a supervisory system.

3. No device designation shall be duplicated in the plant or switchyard. When two or more devices perform exactly the same function, the designations will be followed by a number, starting at number 1, to differentiate between the devices.

   Examples: 127UCX1, 2.....Auxiliary Relays to Device 127UC
   71WSHX1, 2, 3...Auxiliary Relays to Device 71WSH
   104UC1, 2.....Unit 1 Master Control Starting Relays

4. All schematic diagrams shall have an explanation list for devices shown on that diagram. This explanation list shall consist of a device designation with a concise description for each device and be located above the title block (e.g. See the examples in Notes 1 and 3 above).

5. This list of device symbols shows the preferred symbol to be used on Bureau of Reclamation single-line and schematic diagrams.

6. The following symbols are not part of the device symbols they are shown with, always replace these symbols by the following:

   *...Show device function numbers and letter suffixes within circle.

   ▽...Show color of lamp by the following: A-Amber, B-Blue, C-Clear, G-Green, O-Orange, R-Red, W-White.

   ■...Substitute symbol from the following list:

A - Ammeter	PH - Phase Meter
AH - Ampere-hour Meter	PI - Position Indication
CMA - Contact-making Ammeter	RF - Reactive Factor Meter
CMC - Contact-making Clock	RPM - Speed Indicator
CMV - Contact-making Voltmeter	SY - Synchroscope
DM - Demand Meter	T - Temperature Meter
ETM - Elapsed Time Meter	TS - Time Switch
F - Frequency Meter	V - Voltmeter
G - Galvanometer	VAR - Varmeter
GD - Ground Detector	VH - Varhour Meter
OHM - Ohmmeter	W - Watt Meter
OSC - Oscillograph	WH - Watthour Meter
PF - Power Factor Meter	WHDM - Watthour-demand Meter

   Use "R" in front of letters for a recording type meter.

   □....Show location to which data or information is being telemetered.

   ⬬....Show device function numbers and letter suffixes.

   ⬭....Show a descriptive note, letter, abbreviation or word to indicate when the contact opens or closes. For latching relays, selector or control switches, use the normally open contact with a letter or word indicating when the contact closes. For time delay relays use TDC or TDO for contacts. All other relay contacts do not require any descriptive note.

   △....Show TR for torque-synchro receiver or TX for torque-synchro transmitter.

   ┼....Show C, M, or G within symbol. Internal connections for A.C. machines should be shown, e.g. three phase, single phase, etc.

   ⬡....Show S.T. for shunt trip, R.C.T. for reverse current trip, U.V. for undervoltage trip, etc.

7. Channels are via microwave or leased facilities, not via powerline carriers.

8. These contact symbols apply to the following devices: control, flow, level, limit, position, pressure, speed, and temperature switches, relays; contactors; auxiliary contacts; etc. For selector switches, always use a normally-open contact with the position(s) the contact is closed listed below contact.

9. The symbols shown before this point are used on single-line and schematic diagrams. The symbols shown after this point are used as follows: the left-hand symbols are used on single-line diagrams; the right-hand symbols are used on schematic diagrams.

10. All devices shall be shown in the nonoperated and deenergized positions, e.g. breakers shall be open; latching relays shall be in the reset position; selector switches shall be in the off position; level switches shall be in the empty container state, pressure switches shall be in the ambient pressure state; temperature switches shall be in the ambient temperature state; valves, gates, and doors shall be shown in the closed position; etc.

11. All devices, shown on schematic diagrams, shall be shown with their device terminal points numbered and/or lettered for identification of internals for wiring purposes.

12. Whenever this drawing and drawing number 104-D-757 are both referenced, the designations and symbols shown on this drawing shall take precedence over those shown on 104-D-757.

This drawing supersedes drawings 104-D-200 through 104-D-214.

REV NO		
4	2017-10-24 Patterson, James B P.E.	SHADED IN TOP OVAL FOR NOTE 6. ("SHOW DEVICE FUNCTION NUMBERS...") CLARIFIED NOTE 8 FOR SELECTOR SWITCHES
6-24-2003 D- L.G.	REVISED STANDARDS REFERENCES.	
4-4-00 D- L.G.	REDRAWN IN AUTOCAD.	
6 - 1 - 90 D- J.W.R.	ADDED LIST OF SPERCEDED DRAWINGS, NEW TITLE BLOCK, AND DRAWING NUMBER IN UPPER LEFT CORNER.	

ALWAYS THINK SAFETY

UNITED STATES
DEPARTMENT OF THE INTERIOR
BUREAU OF RECLAMATION
STANDARD DESIGNS

MAJOR POWER/PUMPING PLANTS
ELECTRICAL INSTALLATION
DEVICE DESIGNATIONS AND SYMBOLS TO BE USED ON SINGLE-LINE AND SCHEMATIC DIAGRAMS

DESIGNED	R.W.M.	TECHNICAL APPROVAL	J. REIF
DRAWN	D.D. DROUILARD	SUBMITTED	H.H. VANDERPLAATS
CHECKED	P.W.	APPROVED	R.H. AUERBACH
			CHIEF, ELECTRICAL BRANCH

CADD SYSTEM AutoCAD Rel. 21.0s	CADD FILENAME 104-D-1150-RD-1.DWG	DATE AND TIME PLOTTED OCTOBER 24, 2017 09:33
DENVER, COLORADO <>	OCTOBER 21,1983	104-D-1150

Released

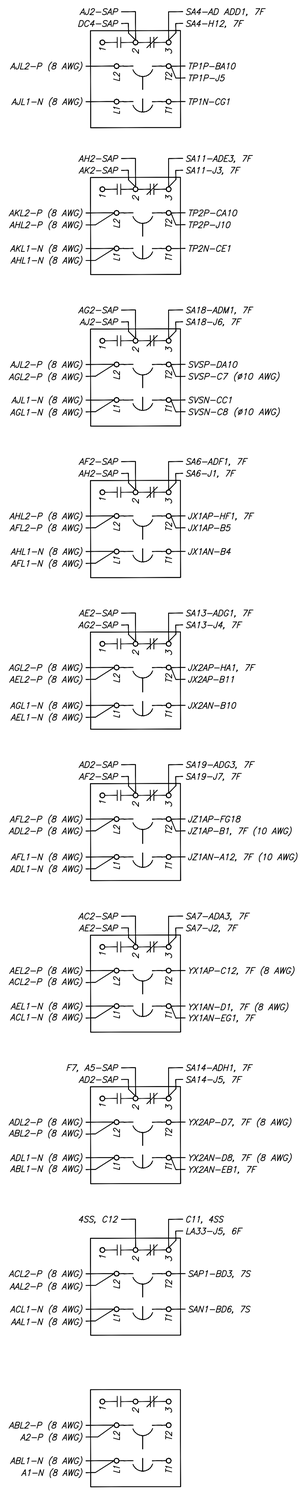

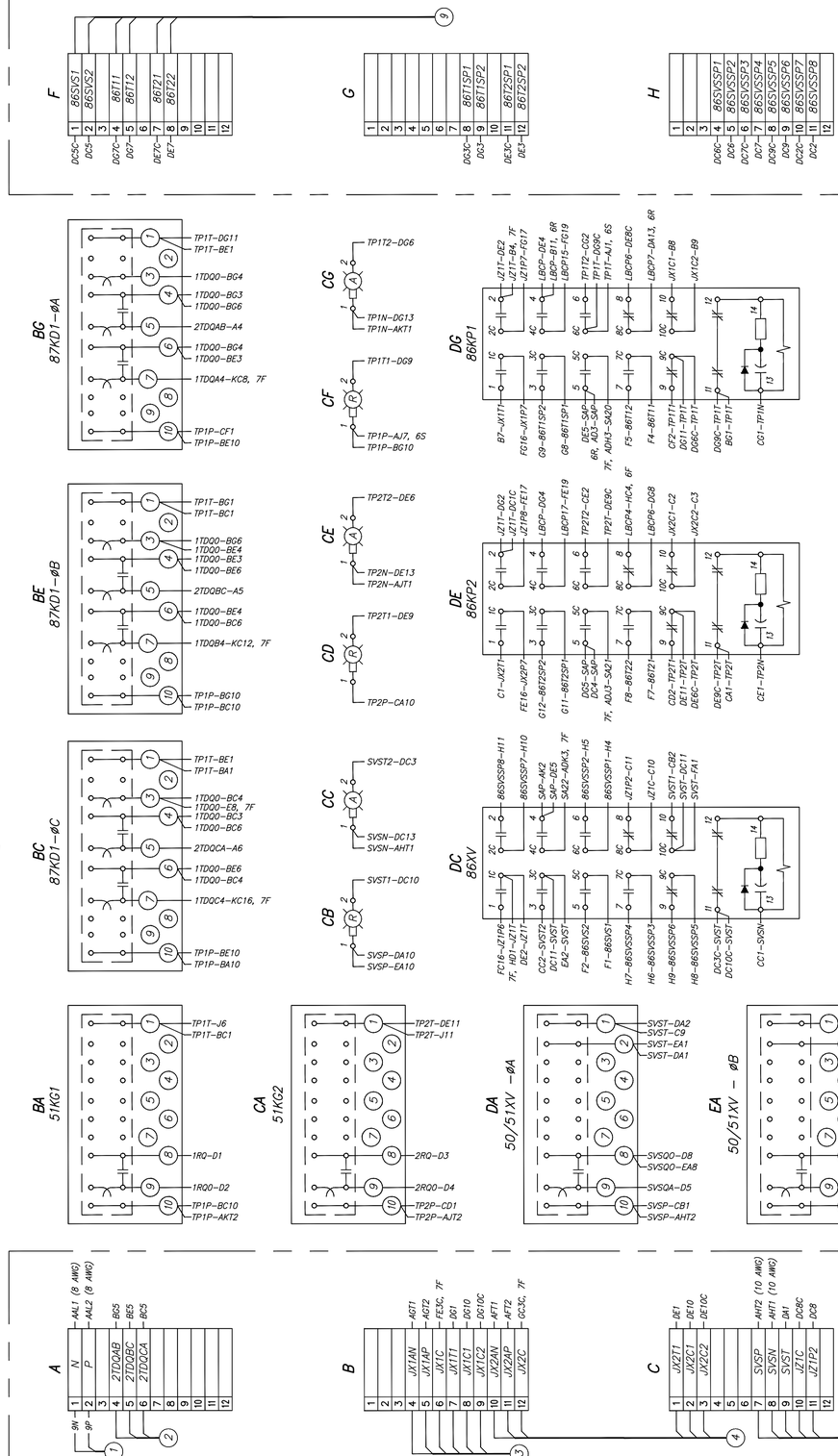

CABLE LIST

CABLE NUMBER	CABLE DESIGNATION	DESTINATION REFERENCE DRAWING	CABLE SIZE
(1)	9BSA–CSA7R___	(6300)___	2–1/C–8
(2)	1JX1A–CSA7R___	(6121)___	1–5/C–10
(3)	1CSA7R–JX1A___	(6121)___	1–9/C–10
(4)	2CSA7R–JX2A___	(6230)___	1–9/C–10
(5)	3CSA7R–JZ1A___	(6249)___	1–12/C–10
(6)	1KX1A–CSA7R___	(6097)___	1–3/C–10
(7)	1KX2A–CSA7R___	(6201)___	1–3/C–10
(8)	1JX1A–CSA7R___	(6249)___	1–5/C–10
(9)	4CSA7R–RTU___	(6599)___	1–12/C–16
(10)	5CSA7R–KX1A___	(6097)___	1–5/C–10
(11)	6CSA7R–KX2A___	(6201)___	1–5/C–10

EXPLANATION

POINT–TO–POINT WIRING DIAGRAMS

A. Double letters in bold face, such as AA, indicate the location of each device on the wiring diagram except for terminal blocks.

B. Single letters in bold face, such as A, indicate the location of each terminal block on the wiring diagram.

C. A control board is made of many sections which in turn are made of different panels. The sections are designated numerically 1 through "n" with "n" being the last section of the control board. The different panels are designated alphabetically as follows:
1. F – Indicates the front panel.
2. R – Indicates the rear panel.
3. S – Indicates the swing panel when there is only one swing panel per section.
4. FS and RS – Indicate the front and the rear swing panels, respectively, when there are two swing panels per section.
5. SS – Indicates the shipping split terminal block panel/section location.

D. All point–to–point wiring diagrams shall be drawn as follows:
1. All devices shown on the drawing shall represent the relative physical location of the devices.
2. Circuit (wire) designations shall be located next to the device stud (pin).
3. The circuit (wire) termination point shall be placed second from the device stud with a hyphen between the circuit designation and the circuit termination point.
4. The panel destination (number) of the wire shall be placed in the last position from the device stud with a comma between the circuit termination point and the panel destination. All panel wiring within the same panel will not require a panel destination.
5. Therefore, an example of point–to–point wiring is "LBCP4–HC4, 6F" which is located at device, DE, stud 8 on this drawing. The circuit (wire) designation is LBCP4. The circuit (wire) termination point is at device HC, stud (pin) number 4, located on the front panel of section 6.

NOTES

1. All cable shields and spare conductors shall be connected to the ground bus.

2. An internal wiring diagram of each type of protective relay, except lockout relays, shall be shown on a separate drawing. All other devices, including lockout relays, shall have their internal wiring diagrams shown on their external point–to–point wiring diagrams.

3. Do not edit the lineweights or text styles in this drawing. Only use text styles that are used in this drawing.

4. Do not explode or burst the titleblock. Contractor to edit titleblock information for each drawing based on information provided by Government. The titleblock information includes Subfeature, Contents, Details, and Drawing Number. Obtain latest version of Government titleblock and standards prior to commencing with Government Format Drawings.

5. The space below the Reclamation Logo at the top right side of the titleblock is reserved for manufacturer's information. At a minimum, include the following information in the space provided: Manufacturer's name, address, phone number, date, and solicitation number. Use Government provided block.

REFERENCE DRAWINGS

MAIN CONTROL BOARD CSA – PANEL 6R WIRING DIAGRAM . . . . . XXX–X–XXXXX
MAIN CONTROL BOARD CSA – PANEL 6F WIRING DIAGRAM . . . . . XXX–X–XXXXX
MAIN CONTROL BOARD CSA – PANEL 7F WIRING DIAGRAM . . . . . XXX–X–XXXXX
MAIN CONTROL BOARD CSA – PANEL 7S WIRING DIAGRAM . . . . . XXX–X–XXXXX

RIGHT SIDE SHEET

REAR PANEL – REAR VIEW

LEFT SIDE SHEET

RECLAMATION
Managing Water in the West

Manufacturer Information
Name:
Address:
Phone:
Date:
Solicitation Number:
Other Info:

ALWAYS THINK SAFETY

U.S. DEPARTMENT OF THE INTERIOR
BUREAU OF RECLAMATION
DESIGN, DATA (ELECTRICAL)
COLORADO

DESIGN DATA TYPICAL POWERPLANT_PUMPING PLANT

ELECTRICAL INSTALLATION

REV. NO.	CONTRACT NO. R17PD00063 SPECIFICATION NO. 20–C0860
4.2	2019–03–03 D
4	2020–02–07 D REVISED TO NEW DRAFTING STANDARDS. Welsh, Richard A, P.E.
2	2000–04–03 D REDRAWN IN AUTOCAD. LG
1	1991–03–01 D REVISED TO NEW DRAFTING STANDARDS. JWR

R.W MC AFEE
DESIGNED
M.F. JOJOLA
DRAWN
R.W MC AFEE
CHECKED
C.D. OSBURN
TECH. APPR.
F.W. COOK, SR
APPROVED
ADMIN APPROVAL – CHIEF, ELECTRICAL BRANCH
D 1990–12–20

MAIN CONTROL BOARD CSA – PANEL 7R

WIRING DIAGRAM

104–D–1165
SHEET 1

DATE AND TIME PLOTTED
OCTOBER 18, 2019 09:26
PLOTTED BY
SYANG

CAD SYSTEM
AutoCAD Rel. 23.0s
CAD FILENAME
104–D–1165–RD–1.DWG

Released

EXPLANATION

DEVICE	LOCATION	DESCRIPTION
XXX-X	XXX	XXXXX

I/O EXPLANATION

I/O	DEVICE	DESCRIPTION / FUNCTION
OUT 101	11KSA	TRANSFORMER DIFFERENTIAL
OUT 102	11KSA	WATCHDOG ALARM
IN 101	11KSA	52A "a" CONTACT

TEXT

CATEGORY	LAYER	SIZE	HEIGHT (INCHES)	COLOR
SWITCHBOARD/EQUIPMENT TITLE	G-ANNO-TEXT-BR6	BR6	3/16	WHITE
SWITCHBOARD/EQUIPMENT SUBTITLES	G-ANNO-TEXT-BR5	BR5	9/64	MAGENTA
NOTES AND DEVICE DESIGNATIONS	G-ANNO-TEXT-BR4	BR4	1/8	CYAN
SWITCH POSITION, CONTACT TYPE, DEVICE INSTALLATION, DEVICE LOCATION, DESCRIPTIONS, RUNG NUMBER	G-ANNO-TEXT-BR3	BR3	3/32	RED
RATINGS, WIRE DESIGNATIONS, SWITCH STATE, LAMP COLORS	G-ANNO-TEXT-BR2	BR2	5/64	11
TERMINAL NUMBERS, CROSS REFERENCE	G-ANNO-TEXT-BR1	BR1	1/16	12

CABLE LIST

CABLE NUMBER	CABLE DESIGNATION	DESTINATION REFERENCE DRAWING	CABLE SIZE
(1)	#XXX-XXXX	D-XXXXX	#-#/C- x AWG

LINE TYPES, LAYERS AND COLORS

FOR SINGLE LINE AND THREE LINE DIAGRAMS USE THE FOLLOWING LINE WEIGHTS:

	MAIN POWER CIRCUITS AND BUS	NOT TYPICALLY USED	CONTROL AND INSTRUMENT TRANSFORMER CIRCUITS AND OTHER SMALL WIRING	USE FOR SHOWING ADDITIONAL DETAIL, i.e. KEYED AND ELECTRICAL INTERLOCKS	EQUIPMENT BOUNDARIES
LINE TYPE LINE LAYER LINE COLOR	CONTINUOUS E-DIAG-1LINE-WIRG 8 (GRAY)	CONTINUOUS E-LINE HEAVY MAGENTA	CONTINUOUS E-DIAG-SCHM-WIRG CYAN	DASHED2 G-LINE-DSHD RED	HIDDEN2 G-LINE-HDDN RED

FOR SINGLE LINE AND THREE LINE DEVICES LAYERS AND COLORS SHOULD MATCH CORRESPONDING LINE WEIGHT.

MAIN LINE DEVICES (BREAKERS, SWITCHES, FUSES, TRANSFORMERS)
LAYER: E-DIAG-1LINE-DEVS
COLOR: 8 (GRAY)

SECONDARY COMPONENTS (RELAYS, POWER MONITORS, METERS)
LAYER: E-DIAG-SCHM-DEVS
COLOR: CYAN

LINE TYPES, LAYERS AND COLORS

FOR SCHEMATIC AND WIRING DIAGRAMS USE THE FOLLOWING LINE WEIGHTS:

	VERTICAL BUS	CABLED CONDUCTORS (WIRING DIAGRAMS)	HORIZONTAL LADDERS AND SYMBOLS	BOXES AROUND PLC I/O OR MULTIPLE CONTACTS OF A DEVICE	EQUIPMENT BOUNDARIES
LINE TYPE LINE LAYER LINE COLOR	CONTINUOUS E-DIAG-1LINE-WIRG 8 (GRAY)	CONTINUOUS E-LINE HEAVY MAGENTA	CONTINUOUS E-DIAG-SCHM-WIRG CYAN	DASHED2 G-LINE-DSHD RED	HIDDEN2 G-LINE-HDDN RED

FOR SINGLE LINE AND THREE LINE DEVICES LAYERS AND COLORS SHOULD MATCH CORRESPONDING LINE WEIGHT.

MAIN LINE DEVICES (BREAKERS, SWITCHES, FUSES, TRANSFORMERS)
LAYER: E-DIAG-1LINE-DEVS
COLOR: 8 (GRAY)

SECONDARY COMPONENTS (RELAYS, POWER MONITORS, METERS)
LAYER: E-DIAG-SCHM-DEVS
COLOR: CYAN

NOTES

1. Prior to drawing development, Contractor shall request drawing standards package from the Government in order to develop drawings.
   1.1. Standard 104-D Government drawings in DWG format
   1.2. This drawing in DWG format
   1.3. Symbol library in DWG format
   1.4. Government ctb file for PDF creation
2. Include notes and reference drawings on each drawing. Add, edit or delete text as directed by the Government.
   2.1. Use tables for explanation, reference drawings and legends.
   2.2. Use single spaced MTEXT for notes and any multi-line text on the drawing.
   2.3. Include Explanation on Schematic, Single Line, Three Line and Tripping Block Diagrams.
   2.4. Include I/O Explanation on Schematic Diagrams when microprocessor based inputs or outputs are shown.
   2.5. Include Cable List on Wiring Diagrams.
3. Use this DWG file and match layers, line weights, text, styles and other information pertinent to develop drawings to match Reclamation's drawing format.
4. Use only the line thickness and associated colors shown on this drawing.
5. Government drawing numbers may be issued after submission of any RSN. Contractor shall change any reference drawing number that is affected.
6. Use the dynamic signature block for appropriate signatures per FAC 03-03. Chose the selection titled "Design By Others - Accepted" for drawings developed by non-Reclamation sources.
7. Do not burst, explode or change the titleblock in any manner.
8. Do not edit the layers or text sizes. Text height, fonts, layers, and styles as noted on this drawing shall be used. No other types are permitted. Notes shall be single spaced.
9. See Drawing 40-D-7102 for more information.

REFERENCE DRAWINGS

CONTENTS AND DETAILS OF THE DRAWING USE SECOND LINE IF NEEDED	PRJ-STA-SEQ
LIST RELEVANT DRAWINGS	PRJ-STA-SEQ
DRAWING BORDER, SAMPLE TITLE BLOCK AND SIGNATURE LINES	40-D-7102

— BUREAU OF — RECLAMATION

ALWAYS THINK SAFETY

U.S. DEPARTMENT OF THE INTERIOR
BUREAU OF RECLAMATION
STANDARD DRAWINGS

DESIGN DATA - ELECTRICAL

NONE

REV NO		
1	2023-12-04 Mendlin, Eric T P.E.	D Updated symbols and text to latest standards.

E MENDLIN
DESIGNED
E MENDLIN
DRAWN
D. LISCOMB
CHECKED
Mendlin, Eric T P.E.
TECH. APPR.
Boggess, Jay S
APPROVED Manager, Electrical Design Group
ADMIN APPROVAL
DENVER, CO 2018-02-09

ELECTRICAL
GOVERNMENT FORMAT

STANDARDS

104-D-60005

SHEET 1

LAST SAVED DATE
2023-12-04
LAST SAVED BY
JSTAUFFER

CAD SYSTEM
AutoCAD Civil 3D (LMS TECH)
CAD FILENAME
104-D-60005-RO-1.DWG

MISCELLANEOUS DESIGNATIONS

ALT _____ Alternator
A _____ Suffix designation for auxilliary control circuit
ASC _____ Adjustable speed controller
BFV _____ Butterfly valve
C or CAP _____ Capacitor
CB _____ Circuit breaker
CLF _____ Current limiting fuse
CNT _____ Counter
DV _____ Discharge valve
EXC _____ Exciter
FU _____ Fuse
GFCI _____ Ground fault circuit interrupter
GRD _____ Ground
GRS _____ Galvanized rigid steel conduit
GV _____ Gate or guard valve
HR _____ Hand reset (Use as suffix)
I _____ Input
IL _____ Indicating lamp, add prefix for color
IMC _____ Intermediate steel conduit
MCE _____ Motor control equipment (2500 – 5000 volts)
M _____ Motor
MCC _____ Motor control center (600 – volts and lower)
NP _____ Nameplate
NC _____ Normally closed
NO _____ Normally opened
NSPB _____ Nonsegregated phase bus
O _____ Output
PB _____ Pushbutton (Momentary contact type)
PBM _____ Pushbutton (Maintaining contact type)
PC _____ Programmable controller
PR _____ Probe operated relay (Refer to FS for suffix)
REC _____ Rectifier
R/I _____ Resistance to current transducer
SF _____ Service factor
SO _____ Solenoid oiler
SV _____ Solenoid operated valve
TE _____ Time delay on energization
TD _____ Time delay on deenergization
TT _____ Thermal switch
V/I _____ Voltage to current transducer
VLV _____ Valve
WL _____ Water level contact on telemeter receiver (Refer to FS for suffix)

WRM _____ Wound rotor motor
X,Y,Z _____ Suffix for auxiliary relay, switch, or contactor (ALX,CSX,FLX, ect.)

–1,–2,–3, etc. _____ Suffix for unit number for pumping units, gates, valves, ect.

1,2,3, etc. _____ Suffix for electrical device numbering, such as TR1, TR2, ect.

* _____ Estimated rating

RELAY DESIGNATIONS

AL _____ Alarm relay
BG _____ Bearing temperature relay
CR _____ Control relay
FL _____ Field loss relay
FR _____ Field application relay
GP _____ Ground protective relay
IS _____ Incomplete sequence relay
LO _____ Lockout relay
OC _____ Overcurrent relay
OL _____ Overload relay
OV _____ Overvoltage relay
PO _____ Pullout (Loss of synchronism relay)
RC _____ Remote control relay
RSR _____ Remote sensing relay
SC _____ Squirrel cage (damper winding(relay
SR _____ Shift register
TR _____ Time delay relay
UF _____ Under frequency relay
UV–O–R _____ Undervoltage single and reverse phase relay
WT _____ Winding temperature relay

CONTACTOR DESIGNATIONS

FC _____ Field contactor
LC _____ Lighting contactor
M _____ Main contactor
MA _____ Air compressor motor contactor
MF _____ Vent fan motor contactor
MG* _____ Gate motor contactor
MO* _____ Oil pump motor contactor
MV* _____ Valve motor contactor
*Use suffix as application
–C Closing function
–L Lowering function
–O Opening function
–R Rasing function
S _____ Starting contractor
1S _____ Start contactor
2S _____ Start transition contactor } Reduced voltage starting
R _____ Run contactor

SWITCH DESIGNATIONS

CS _____ Control switch
FCD _____ Foreign circuit disconnect switch
FS _____ Float switch (Use suffix letter__ __ C–canal, P–pipe, R–reservoir, S–sump, T–tank)
LS _____ Limit switch
PS _____ Pressure switch
SS _____ Selector switch
TQ _____ Torque switch
TSW _____ Transfer switch

TRANSFORMER DESIGNATIONS

CCT _____ Control circuit transformer
CT _____ Current transformer
PT _____ Potential transformer
T _____ Transformer
TH _____ Transformer oil temperature
TL _____ Transformer oil level
TP _____ Transformer pressure relief
SST _____ Station service transformer

INSTRUMENT AND METER DESIGNATIONS

AM _____ Ammeter
AS _____ Ammeter transfer switch
CNT _____ Start counter
INT _____ Integrating instrument
PF _____ Power–factor meter
PST _____ Phase shifting transformer
RDM _____ Recording demand meter
TM _____ Time meter
V _____ Voltmeter
VAR _____ Varmeter
VARH _____ Varhour meter
VS _____ Voltmeter transfer switch
W _____ Wattmeter
WH _____ Watthour meter
WHD _____ Watthour demand meter
(R) _____ Indicates recording instruments
The asterisk is not part of the symbol.
Replace the asterisk with letter or letters depending on the function of the instrument.

DEVICE SYMBOLS

CS — Control switch
AS — Ammeter transfer switch
VS — Voltmeter tansfer switch
Surge arrester
Capacitor
Reactor
Potential transformer
Current transformer
Power or distribution transformer
3Ø, Wye grounded connection
3Ø, Delta connection
3Ø, Broken delta connection
3Ø Open delta connection (corner grounded)

Disconnecting switch
Liquid level switch (Normally open)
Vacuum and pressure switch (Normally closed)
Temperature actuated switch (Normally open)
Flow actuated switch (Normally open)
Limit switch–direct actuated (Normally open)
Torque switch (Normally closed)
3–Position selector switch
Air circuit breaker thermomagetic trip 1 Frame size, 2 Inverse time trip, 3 Instantaneous trip
1 Rectifier, 2 Reactor, 3 Inverter
Silicon controlled rectifier (Solid state DC switch)
Air circuit breaker, electrically operated
Air circuit breaker, withdraw type
Contactor with thermal trip
Contactor with magnetic trip
Contactor with CT and magnetic trip relay
Contactor (Normally open)
Contactor (Normally closed)
Auxiliary contactor (Closes when main device is closed)
Auxiliary contactor (Open when main device is closed)
Relay contact number
Relay coil, contactor coil
Horn–gap disconnectiong switch
Fuse
Fuse, current limiting type
Instrument shunt
Resistor
Rheostat, or potentiometer
Separable connector
Indicating lamp W–white, R–red, G–green, Y–yellow, A–amber, B–blue
Battery
Bell
Horn
Pushbutton (Normally open, momentary contact)
Pushbutton (Normally closed, momentary contact)
Maintained contact pushbutton

Probe, water level detector
Load interrupter switch
Motor
Triac (Solid state AC switch)
Wound rotor motor

WIRING SYMBOLS

Ground connection
Interconnection between separately owned systems
Duplex single–gang plug receptacle
Single wectherproof plug receptacle
Watertight three–phase power receptacle
Single pole switch
Three way switch
Luminaire, letter indicates type, number indicates wattage
Represents connection from external equipment. Does not necessarily represent a terminal block.
High voltage cable termination
Represents connection from external equipment via–multi–pair control (signal) cable.

GROUND SYMBOLS

Cable exposed
Cable embedded in concrete
Cable concealed but not embedded
Cable buried directly in earth
Ground rod
Welded or bolted connection
Cable riser
Indicates ground when required for clarity
Ground connector per 40–D–4334, Fig. 4
Ground ring

CONDUIT SYMBOLS

Exposed
Embedded in concrete
Concealed but not embedded
Buried directly in earth
Bending toward observer
Bending away from observer
Capped
Pull box or junction box
Designation number
Liquid tight flexible metal conduit
Sealing bushing, conduit to cable

NOTES

1. If designations and symbols other than the ones shown on this drawing used, they shall be shown on the appropriate drawing.
2. For additional designations and symbols refer to NEMA Standards Pub, ICS–1970.
3. Contacts in control circuits are shown in the deenergized position. Liquid level switches are shown with liquid container empty. Vaccum and pressure switches are shown at ambient pressure. Temperature switches are shown at ambient temperature.

3–24–00 D	REVISED TITLE BLOCK AND REDRAWN IN AUTOCAD 14.
3–11–81 D–D.G.	MINOR REVISIONS

ALWAYS THINK SAFETY

UNITED STATES
DEPARTMENT OF THE INTERIOR
BUREAU OF RECLAMATION
STANDARD DESIGNS

PUMPING PLANT
ELECTRICAL INSTALLATIONS
DESIGNATIONS AND SYMBOLS

DESIGNED	N.J.B.	TECH. APPR.	P.L. ANNA
DRAWN	D.D. DROULLARD	SUBMITTED	S.M. DENTON
CHECKED	E.M.T.	APPROVED	W.H. KIGHT
			CHIEF, ELECTRICAL BRANCH

CADD SYSTEM AutoCAD Rel. 14.01b DENVER, COLORADO	CADD FILENAME 104D757.DWG	DATE AND TIME PLOTTED MARCH 30, 2000 14:46
	FEBRUARY 13, 1962	104-D-757

40-D-4334

TYPICAL DETAIL OF GROUNDING METAL CONDUITS

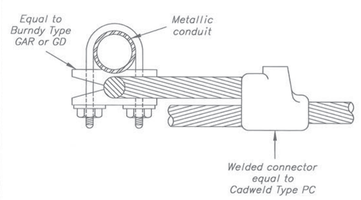

METAL CONDUIT GROUNDING TABLE			
CONDUIT SIZE	MINIMUM SIZE OF GROUND CABLE	NUMBER OF TAPS	CLAMP SIMILAR TO BURNDY TYPE
¾" to 1 ½"	No.4 A.W.G.	1	GAR
2" to 3"	No.1 A.W.G.	1	GAR
Above 3"	No.1 A.W.G.	2	GD

FIGURE 1 DWG 40-D-4334

TYPICAL DETAIL OF BONDING CONDUITS AROUND JUNCTION BOXES

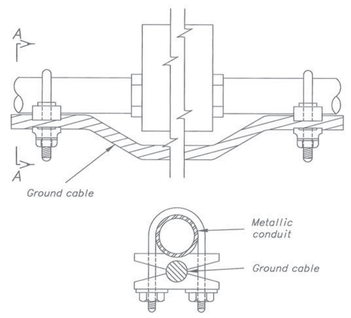

SECTION A-A

NOTE
CLAMPS SHALL BE EQUAL TO BURNDY TYPE GAR OR GD AND BARE COPPER CABLE IN ACCORDANCE WITH THE TABLE IN FIGURE 1 OR A BONDING JUMPER EQUAL TO O.Z. TYPE BJ (WITH BRONZE FITTINGS) MAY BE USED.

FIGURE 3 DWG 40-D-4334

TYPICAL DETAIL OF CROSSING EXPANSION AND CONTRACTION JOINTS WITH GROUNDING CABLE

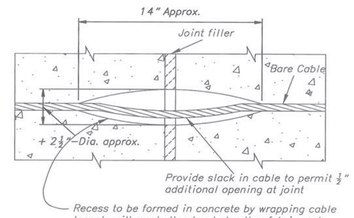

+ This dimension is approximate for No. 4/0 cable only. For larger cables, increase diameter of wrapping accordingly

NOTE
THE CROSSING OF EXPANSION JOINTS WITH EMBEDDED GROUND CABLE SHOULD BE AVOIDED WHENEVER POSSIBLE. THE EMBEDDED GROUNDING SYSTEM FOR EACH UNIT OR BLOCK SHOULD BE SELF CONTAINED.

FIGURE 5 DWG 40-D-4334

TYPICAL GROUNDING DETAILS FOR THREE PHASE BUS STRUCTURE

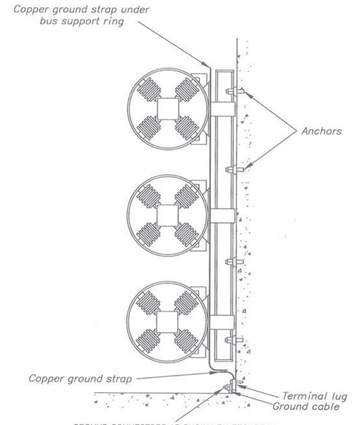

GROUND CONNECTORS AS SHOWN IN FIGURE 4, DWG. 40-D-4334 SHALL BE USED

FIGURE 7 DWG 40-D-4334

TYPICAL DETAIL OF BONDING CONDUITS AT EXPANSION JOINTS

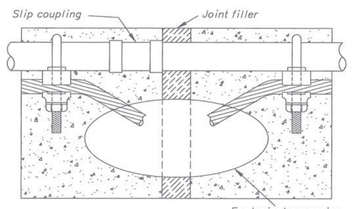

For typical expansion joint crossing see Fig.5 Dwg. 40-D-4334

NOTE
CLAMPS SHALL BE EQUAL TO BURNDY TYPE GAR OR GD AND BARE COPPER CABLE IN ACCORDANCE WITH THE TABLE IN FIGURE 1 OR A BONDING JUMPER EQUAL TO O.Z. TYPE BJ (WITH BRONZE FITTINGS) MAY BE USED.

FIGURE 2 DWG 40-D-4334

TYPICAL DETAIL FOR EMBEDDED GROUND CONNECTOR WITH EQUIPMENT GROUND CABLE

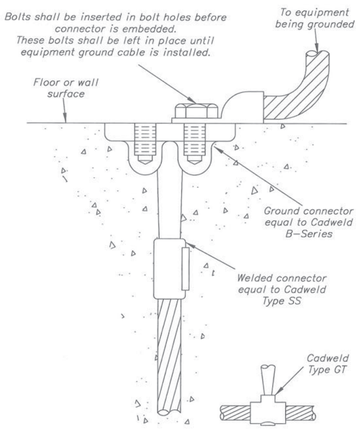

SIDE VIEWS

FIGURE 4 DWG 40-D-4334

NOTES

1. Ground cables for connection to equipment shall be of sufficient length to bolt to equipment when ultimately installed. Terminations as shown in Figure 4 Dwg 40-D-4334 shall be used in lieu of stubouts. Approximate locations only are shown on drawings. Exact locations to be determined in field.

2. Refer to conduit drawings or general arrangement drawings whenever available, for more exact location of equipment.

3. Metal conduits shall be grounded at both ends. If a break occurs in a run of metal conduit, the conduit shall be bonded across the break. In case the above is not feasible, the each section shall be grounded separately. Each contractor shall ground each metal conduit run, or portion theraf, that he installs. Junction or pull boxes not containing protective equipment in which the conduits are installed with a locknut and bondnut shall not be considered a break when the voltage is below 240 volts to ground, but shall be so considered for higher voltages. All junction or pull boxes in runs of non-metallic conduit shall be individually grounded. All boxes containing overload protective devices shall be individually grounded.

4. Ground cable shall be No.4 A.W.G. or larger.

5. All paint, enamel, and scale shall be removed from point of contact on metal surfaces before applying ground connections.

6. All bolts, machine screws, nuts and washers used in making grounding connections shall be copper alloy, similar to Everdur or stainless steel.

7. Cable shields and one conductor of multiconductor cable shall be grounded at both ends.

(For continuation of notes see title sheet of Dwg. 40-D-4334.)

FIGURE 6 DWG 40-D-4334

NOTES

(Continued from Fig. 6)

8. Thermoweld, Cadweld, or an approved equivalent process shall be used in making connections between cables where embedded in concrete, direct buried, or under plant superstructure.

9. Where Thermoweld, Cadweld, or an approved equivalent process is used it shall be performed with heavy duty welding equipment in accordance with manufacturer's instructions and the material shall be new fresh stock.

10. For ground symbols see title sheet of Dwg. 40-D-4335.

REFERENCE DRAWINGS

TYPICAL GROUNDING DETAILS - SHEET NO.2 _ _ _ 40-D-4335

THIS DRAWING AND DRAWING 40-D-4335 SUPERSEDES IN PART DRAWING 40-D-4336, 01-14-2003

3-10-00 D-L.G.	REDRAWN IN AUTOCAD R.14 FORMAT
12-2-85 D-G.D.O.	REVISED TO SHOW CURRENT PRODUCTS OR PRACTICES.

ALWAYS THINK SAFETY

UNITED STATES
DEPARTMENT OF THE INTERIOR
BUREAU OF RECLAMATION
STANDARD DESIGNS

ELECTRICAL STANDARDS

TYPICAL GROUNDING DETAILS

DRAWN R.Y.N. - S.J.S. SUBMITTED D. CLARK
TRACED J.M.H. RECOMMENDED H.H. PLUMB
CHECKED V.N.P. - R.F.H. - T.J.L. APPROVED I.N. McCLELLAN
ACTING CHIEF ENGINEER

CADD SYSTEM	CADD FILENAME	DATE AND TIME PLOTTED
AutoCAD Rel. 15.06x (LMS)Tec	4334.DWG	MAY 1, 2003 13:51

DENVER, COLORADO MAY 1, 1947 SHEET 1 OF 2

40-D-4334

FIGURE 1

GROUND MATS

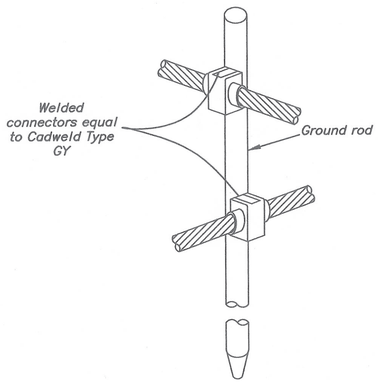

GROUND ROD DETAILS

FIGURE 2

GROUND MATS

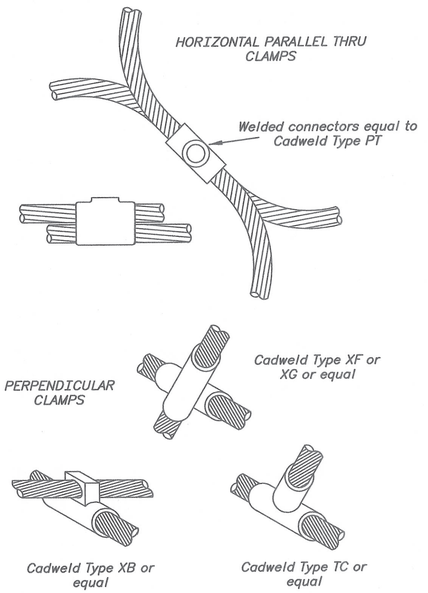

FIGURE 3

LIGHTING OR MISC POWER CABINETS

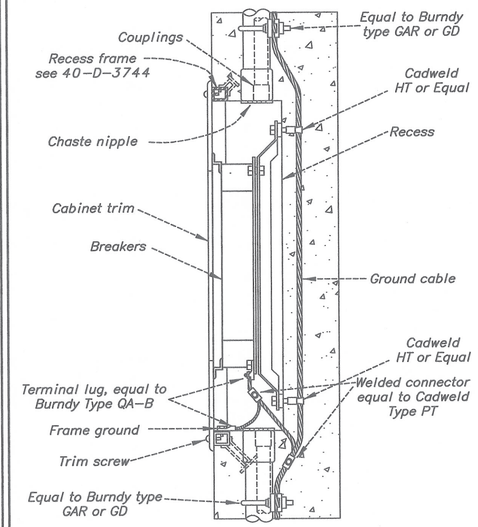

SECTIONAL ELEVATION

FIGURE 4

RAILS

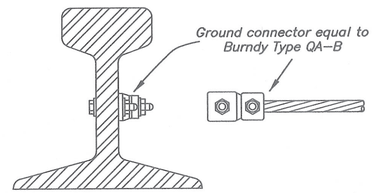

EXPOSED INSTALLATION

CONNECTION TO RAIL

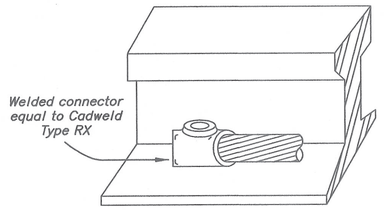

EMBEDDED INSTALLATION

CONNECTION TO RAIL

NOTES

1. See drawing 40-D-4334 for notes and list of reference drawings.

GROUND SYMBOLS

(Used on Plan Drawings)

- Indicates ground cable embedded in concrete
- Indicates ground cable concealed but not embedded in concrete
- Indicates ground cable exposed
- Indicates ground rod
- Indicates ground connection
- Indicates ground cable riser
- Indicates embedded ground plate

FIGURE 5

FLOOR FRAMES

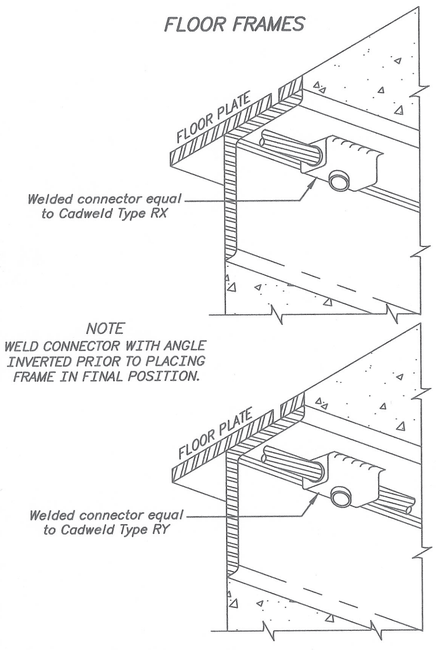

FIGURE 6

RAILING POST BASES AND HANDRAIL SUPPORTS

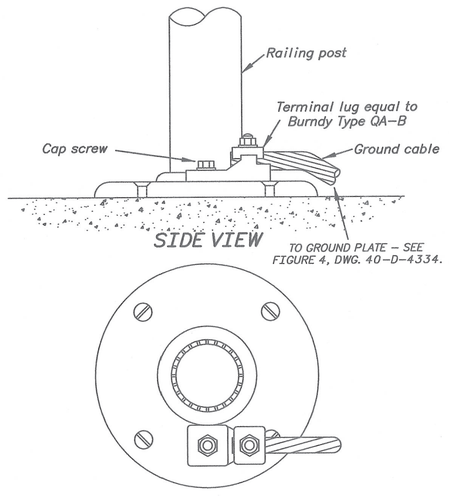

SIDE VIEW

PLAN VIEW

CONNECTION TO RAILING POST BASE

(DETAILS FOR GROUNDING HANDRAIL SUPPORTS ARE SIMILAR)

FIGURE 7

OIL TANK GROUNDING DETAILS

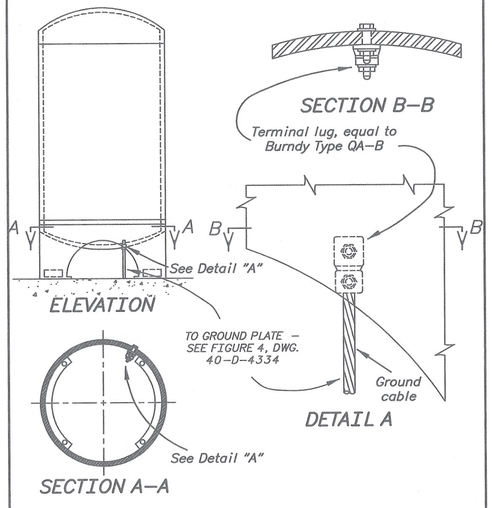

ELEVATION

SECTION A-A

DETAIL A

FIGURE 8

CONTROL CABLE SHIELD

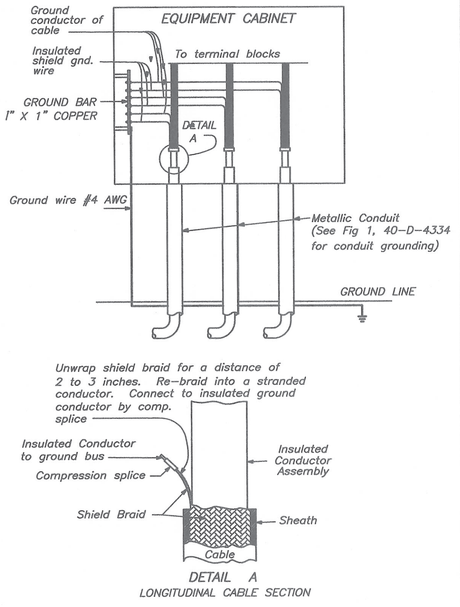

DETAIL A

LONGITUDINAL CABLE SECTION

REFERENCE DRAWINGS

ELECTRICAL INSTALLATION - TYPICAL GROUNDING DETAILS (SHT 1 OF 2) 40-D-4334

REV NO		
3	2004-07-06 D - NRS	MINOR REVISIONS; ADDED FIG.'S 2 AND 8.
3 - 10 - 00 D - L.G.		REDRAWN IN AUTOCAD R.14 FORMAT
12 - 2 -85 D - G.D.O.		REVISED TO SHOW CURRENT PRODUCTS OR PRACTICES.

THIS DRAWING SUPERSEDES DRAWING 40-D-4336 IN PART (2003-01-14); AND DRAWING 104-D-944 (2004-07-06)

ALWAYS THINK SAFETY

UNITED STATES
DEPARTMENT OF THE INTERIOR
BUREAU OF RECLAMATION

STANDARD DESIGNS

ELECTRICAL INSTALLATION

TYPICAL GROUNDING DETAILS

DRAWN R.Y.N. - S.J.S. SUBMITTED D. CLARK

TRACED J. M. H. RECOMMENDED H. H. PLUMB

CHECKED V.N.P. - R.F.H. - T.J.L APPROVED L. N. McCLELLAN
ACTING CHIEF ENGINEER

DENVER, COLORADO APRIL 24, 1947
SHEET 2 OF 2

40-D-4335

CAD SYSTEM
AutoCAD Rel. 16.0s
CAD FILENAME
40-D-4335.DWG
DATE AND TIME PLOTTED
JUNE 30, 2004 16:31
PLOTTED BY
DSNAVIGR

MICRO 01 2004

DESIGN ASSUMPTIONS - Prepare loading sheet showing assumed live loads for various parts of the plant. Include estimate weights of pumps, motors, cranes, other equipment, special loads, and motor truck loads. Provision should be made for impact. Also include, if applicable, forces due to pipe thrusts, hydrostatic loads, earth pressures, snow and wind loads, construction loads, earthquake and ice loads. Motor and pump supports should be designed to prevent undue deflection.

Examples - Design assumptions

Gila Pumping Plant 50-D-1231 (Medium plant-Concrete superstructure)
Willow Creek Pumping Plant 3-D-2390 (Small plant - Concr. superstructure)
Coppeck Bay Pumping Plant "H" 12-D-646 (Small plant-Wood superstructure)

HORIZONTAL EARTH PRESSURES - Usually the following is assumed:

Dry earth (Weight 100 lb./cu.ft.)-Level surcharge - 30 lb./sq.ft./ft. E.L.P.
Saturated earth (Wt. 125 lb./cu.ft.) - Level surcharge - 82 lb./sq.ft./ft. E.L.P.
Saturated gravel (Wt. 125 lb./cu.ft.)-Level surcharge - 75 lb./sq.ft./ft. E.L.P.
E.L.P. = Equivalent Liquid Pressure

***EARTHQUAKE LOAD** - Assume lateral load of 5 to 20% of dead load and fixed live load, if applicable. Point of application of lateral load assumed at center of gravity of each loading element.

***WIND LOAD** - Assume on exposed surfaces - 30 lb./sq.ft.

* Where earthquake or wind loads are combined with static or impact loads, increase allowable stresses 33%. Wind load and earthquake not considered acting at same time.

ICE PRESSURE - Where applicable, ice pressure on intake walls and substructure walls is assumed at from 6,000 to 15,000 lb. per lin. ft. of wall depending on locality. For design of walls with ice pressures, use f_s of 35,000 lb./sq.in. and f_c of 2500 lb./sq.in.

UPLIFT - Hydrostatic uplift to be assumed over entire area of base of plant. Uplift pressure assumed to have linear variation between points of known pressure. When foundation is of sound rock, a maximum reduction in uplift pressure of one-third may be allowed. When foundation is on earth or piles 100% uplift should be used.

ALLOWABLE FOUNDATION LOADING - Pressure on foundation should be kept well within estimated or test loads for area, considering that soil will be saturated after plant is in operation.

ALLOWABLE BEARING VALUES - Unless soil tests indicate otherwise, the following to be used:

Soft clay - 1 ton/sq.ft.
Medium clay - 4 tons/sq.ft.
Sand-fine compact or coarse loose - 3 tons/sq.ft.
Hard clay - 6 tons/sq.ft.
Sand-fine loose 1 ton/sq.ft.
Gravel - 4 to 5 tons/sq.ft.
Hardpan - 10 tons/sq.ft.

RESISTANCE TO SLIDING - Sliding coefficients of concrete and various foundation materials should not exceed:

Clay - 0.30
Shale & sand - 0.40
Gravel - 0.50
Rock - 0.75

Minimum factor of safety:
For maximum loads - 1.33
For normal loads - 1.75

GENERAL NOTES ON STABILITY

1. All plants should be designed for extreme or critical conditions which may be encountered in operation.

Example A.- Plants with wet wells for pump suctions - Cells may be all unwatered by placing stop-logs or building dikes during normal water period. At flood stage, water level inside of plant is same as outside.

Example B.- Plants with suction tubes and pumps in dry pits - Cells remain dry during flood waters and uplift may float plant. Check stability of plant against flotation at flood stage.

2. All plants should be designed for effect of saturated earth behind plant. If applicable, the elevation of saturated earth behind plant shall be assumed a maximum of 10 feet above water level in front of plant

Example A.- Flood water levels can drop rapidly and leave material behind plant saturated.

Example B.- Plant may be unwatered at normal water levels and saturated earth elevation behind plant may be 10 feet above normal water.

Example C.- Plants have been unwatered by building dike across intake and pumping dry which would leave plant dry with some saturated earth behind. (Assume 10 feet if applicable.)

PERMANENT SIDE SLOPES - Slopes generally preferable:
2:1 Up to high water. 1½:1 Above high water.

ALLOWABLE WORKING STRESSES IN CONCRETE AND REINFORCEMENT

See Joint Committee Report A.S.C.E. June 1940 Usually as follows: (Unless concrete control permits higher concrete stresses.)

Concrete: f'_c = 2500 lb./sq.in. (Ultimate). f_c = 1,125 lb./sq.in.
Reinforcement: f_s = 20,000 lb./sq.in.

ALLOWABLE WORKING STRESSES IN WOOD - See National Design Specification for Stress Grade Lumber and Its Fastenings.- National Lumber Manufacturers Association 1944.

REINFORCEMENT

Temperature stresses - Minimum steel area to be 0.3% of concrete area.
Protective covering - Minimum clear cover over main reinforcement as follows: (See sheet X-D-3626 - Manual).

Unexposed to weather - 1 in.
Exposed to weather - 2 in.
Against ground or water - 3 in (If possible)

Splices - (f'_c = 2500 lb./sq.in.)
40 Bar diameters

REFERENCE

U.S. Bureau of Reclamation Manual; Volumn IX, Engineering Design; Part 6, Structural Design Camp and Community Planning, Chapters 6.1, 6.2 and Appendix I. Also Part 7, Turbines and Pumps; Chapter 4.

UNITED STATES
DEPARTMENT OF THE INTERIOR
BUREAU OF RECLAMATION
STANDARD DESIGNS
SMALL AND MEDIUM PUMPING PLANTS - DESIGN NOTES

DRAWN J.C.C. SUBMITTED
TRACED C.R.W. RECOMMENDED
CHECKED ER. S.T. APPROVED
CHIEF ENGINEER
DENVER, COLO. — 8-7-47 40-D-4401

REV. 9-24-47 1-11-49 2-9-49

KEYPUNCHED

SWITCH FUNCTION	ESCUTCHEON	HANDLE	NOTES
CO_2 MANUAL DISCHARGE	(R) (G) DISCH. NOR.	Red, pistol grip, pull-out and turn to discharge postition. Maintain in DISCHARGE. Manual return to the 12-o'clock position, inwardly to NORMAL.	
GOVERNOR OIL PUMP (On actuator cabinet)	(R) MAN. OFF AUTO.	Black, oval Maintaining	Red lamp indicates pump on.
TRANSFER TRIP TEST SWITCH	(A) (B) (R) SEND REC. OFF ON	Black, oval Maintaining	Amber lamp indicates trip signal. Red lamp indicates guard signal. Blue lamp indicates tests are satisfactory.
UNIT MASTER STARTING & STOPPING CONTROL SWITCH #	STOP START	Black, oval Spring return to center	
UNIT AUXILIARIES CONTROL SWITCH FOR MANUAL CONTROLS FROM CONTROL BOARD #	(R) STOP START	Black, oval Spring return to center	Red lamp indicates all auxiliaries are in operation.
GOVERNOR DASHPOT BYPASS CONTROL SWITCH	OFF ON	Black, oval Maintaining	
NORMAL SHUTDOWN CONTROL SWITCH #	(G) (R) SHUT DOWN RESET	Black, oval Spring return to center	Green lamp indicates unit is shutdown. Red lamp indicates unit normal and shutdown device is reset for running.
AIR ADMISSION CONTROL SWITCH	(Y) (R) MOTOR GEN	Black, oval Spring return to center	Yellow lamp indicates unit is motoring. Red lamp indicates unit is generating.
CO_2 CONTROL TRANSFER SWITCH	(Y) (Y) TEST OFF ON	Black, oval Maintaining	One yellow lamp indicates initial discharge is in operation. Second yellow lamp indicates time delay discharge is operating. If delayed discharge is not provided, furnish one yellow lamp over center of switch.
BUS DIFF. REL. (3 Sets per bus)	(Y) 2 3 1	Red, oval Maintaining	Lamp on in all positions except No. 1 (Normal). Relays in service and switching conditions to be shown on nameplate.
BREAKER AND MOTOR OPER. SWITCH CONTROL #	(G) (R) TRIP CLOSE	Black, pistol grip Spring return	Mechanical indicating device shall be provided to show last operation of switch.

SWITCH FUNCTION	ESCUTCHEON	HANDLE	NOTES
SYNCHRONIZING (Man. only)	OFF ON	White, oval, removable in OFF position only. Maintaining	2 Handles to be furnished for the group of switches. One handle will be issued for operation and the other reserved as a spare.
SYNCHRONIZING (Man. & Auto.)	OFF MAN. AUTO.	White, oval, removable in OFF position only. Maintaining	
VOLTAGE REG. CONTROL TRANSFER	IND. MAN. REG.	Black, oval Maintaining	
VOLTAGE ADJUST	+ (G) (R) + LOWER RAISE	Black, oval Spring return	RAISE and LOWER refer to voltage change and not to rheostat resistance. Red and green lamps are on at intermediate positions. Green lamp goes out at fully raised position. Red lamp goes out at fully lowered position.
EXCITER RHEOSTAT CONTROL	(G) (Y) (R) LOWER RAISE	Black, oval Spring return	RAISE and LOWER refer to voltage change and not to rheostat resistance. Red and green lamps are on at intermediate positions. Green lamp goes out at fully raised position. Yellow lamp indicates -Speed- no load rated voltage position. Red lamp goes out at fully lowered position.
WICKET GATE LIMIT CONTROL SPEED CHANGER & SPEED DROOP CONTROL (Motor operated) LOAD TAP. CHG TRANSF.	LOWER RAISE	Black, oval Spring return	
CONTROL TRANSFER	OFF MAN. AUTO.	Black, oval Maintaining	Position engraving on control transfer switches for load tap changing transformers shall be "MAN-AUTO-LTC" instead of "MAN-OFF-AUTO"
CONTROL TRANSFER	LOCAL REMOTE	Black, oval Maintaining	Position engraving on control transfer switches for supervisory control shall be "LOCAL-SUP" instead of "LOCAL-REMOTE"
RECLOSING (Breaker & half scheme)	1 2 OFF 3	Black, oval Maintaining	P.C.B.s on which reclosing is in service in each position to be shown on nameplate.
RELAY TRANSFER	(Y) 2 3 4 1 5	Black, oval Maintaining	Use number of position required. Lamp on in all positions except pos. in which relays are in normal condition. Relays in service and switching conditions in each position to be shown on nameplate.
OUT OF STEP RELAYS	1 2 OFF 3	Black, oval Maintaining	Relay element and reclosing in service in each position to be shown on nameplate.

SWITCH FUNCTION	ESCUTCHEON	HANDLE	NOTES
BUTTERFLY VALVE CONTROL	(G) (R) CLOSE OPEN	Black, pistol grip Spring return	Red and green lamps are on at intermediate positions. Green lamp goes out at fully open position. Red lamp goes out at fully closed position.
PENSTOCK GATE CONTROL SWITCH (Formerly TEST) #	(G) * (R) CLOSE OPEN	Red, pistol grip, pull-out-and-turn to operate. Spring return to "in" position (12 o'clock)	Red and green lamps are on at intermediate positions. Green lamp goes out at fully open position. Red lamp goes out at fully closed position. Contacts of switch shall not operate until handle is first pulled out and then turned.
UNIT EMERGENCY SHUTDOWN #	(G) * (R) SHUT DOWN	Red, pistol grip, pull-out-and-turn to operate. Spring return to "in" position (12 o'clock)	Green lamp indicates Governor shutdown device operated. Red lamp indicates Governor shutdown device reset. Contacts of switch shall not operate until handle is first pulled and then turned.
GEN. BRAKE CONTROL (At actuator)	(W) (W) ON OFF BRAKES MAN. OFF AUTO.	Black, oval Maintaining in AUTO. Spring return from MAN.	
GEN. BRAKE RELEASE CONTROL At control board	(W) (R) (W) OFF AUTO. ON BRAKES OFF ON	Black, oval Spring return	BRAKE INDICATION At main control board Yellow lamp indicates Brake control switch on the actuator is on "AUTO"
OFF - ON Carrier relaying, reclosing, etc.	OFF ON	Black, oval Maintaining	
MISCELLANEOUS INSTRUMENT TRANSFER	Manufacturer's standard escutcheons	Black, round notched	
CARRIER TEST	REC. OFF SEND R.S.	Black, oval Spring return to "NORMAL" from all positions	
LOCKOUT RELAY	(Y) (R) TRIP RESET	Red, oval Electrically operated, hand reset Not tripped by handle.	If manufacturer furnishes a target, it shall be black in reset and yellow (or orange) in trip position. Red lamp on indicates normal. Yellow lamp on, Red OFF, relay tripped and cannot be reset. Both lamps OFF, relay tripped but can be reset.
DIFF. RELAY TRANSFER SW.	(Y) OFF ON	Red, oval Maintaining	Lamp on in "OFF" position (differential relay out of service.

INDICATING LAMP EXPLANATION

- (W) *A.C. or D.C. potential indication except as noted.*
- (R) *In general indicates "In service" or "On-line" conditions.*
- (G) *In general indicates "Out of service" or "Off-line" conditions.*
- (B) *Carrier operation.*
- (Y) *"Spotter lamps" such as for rheostat SNL position, air admission system in Motor, CO_2 system test, brakes in Auto, relay transfer switch not in normal position, and other special applications.*

SWITCH HANDLE AND ESCUTCHEON EXPLANATION

1. Pistol grip handle are used for functions which, when once intiated, cannot be reversed or stopped until completed.

2. Round handles are used for instrument, transfer, and other applications where no control or protective function is involved.

3. Oval handles are used for all functions other than 1 and 2 above.

4. Where response to a control function in indicated on an instrument, the direction of rotation of the switch handle shall correspond to direction of change of indication.

NOTES

1. For nameplates over control switches on unit control board See Dwg. 40-D-6187.

+ Outmoded indirect acting regulators use a pair of red and green lamps for quick and another pair for normal raise and lower.

 # Mechanical indicating device shall be provided to show last operation of switch.

** Nameplate should be engraved "PULL AND TURN TO OP."*

2. For Push-Button type switches, escutcheon engraving in accordance with NEMA industrial control standards is acceptable.

2 - 16 - 00 D - L.G.	REDRAWN IN AUTOCAD
3 - 13 - 73 D - C.F.M.	ADDED NOTE 2

ALWAYS THINK **SAFETY**

UNITED STATES
DEPARTMENT OF THE INTERIOR
BUREAU OF RECLAMATION
DESIGN STANDARDS

ELECTRICAL STANDARDS

CONTROL AND INSTRUMENT SWITCH ESCUTCHEONS AND INDICATING LAMPS

DRAWN N.P.H. SUBMITTED M.H. Kight
TRACED L.W.O. RECOMMENDED O.L. Rice
CHECKED J.B.-M.L.A.-R.F.H. APPROVED W.E. Blomgren
ACTING CHIEF ENGINEER

CADD SYSTEM	CADD FILENAME	DATE AND TIME PLOTTED
DENVER, COLORADO	September 24, 1983	40-D-5324

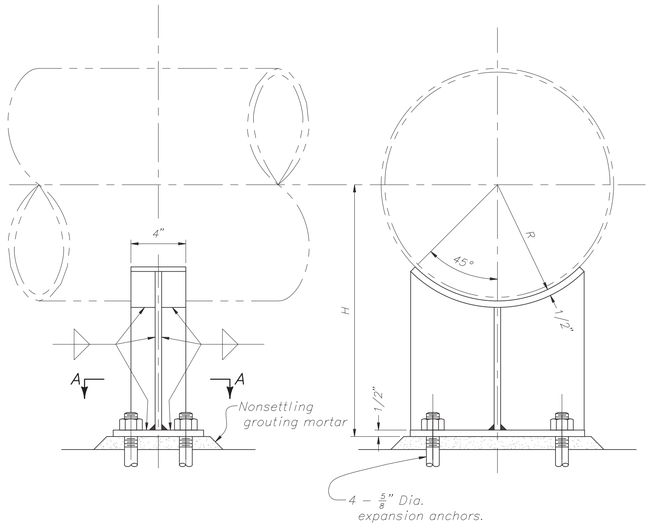

PIPE SUPPORT DIMENSIONS

TYPE B AND TYPE C

PIPE O.D.	A	B	C	D	E	F	G	θ
2 3/8"	1/4"	1/2"	1"	1/4"	8"	4"	2"	50°
3 1/2"	1/4"	1/2"	1 1/2"	1/4"	8"	4"	2"	50°
4 1/2"	3/8"	3/4"	2"	3/8"	9"	4"	3"	40°
5 9/16"	3/8"	3/4"	2"	3/8"	9"	4"	3"	40°
6 5/8"	3/8"	3/4"	2"	3/8"	10"	6"	3"	40°
8 5/8"	1/2"	1"	2 1/2"	1/2"	10"	6"	4"	40°
10 3/4"	1/2"	1"	2 1/2"	1/2"	10"	6"	4"	35°
12 3/4"	1/2"	1"	2 1/2"	1/2"	10"	6"	4"	35°

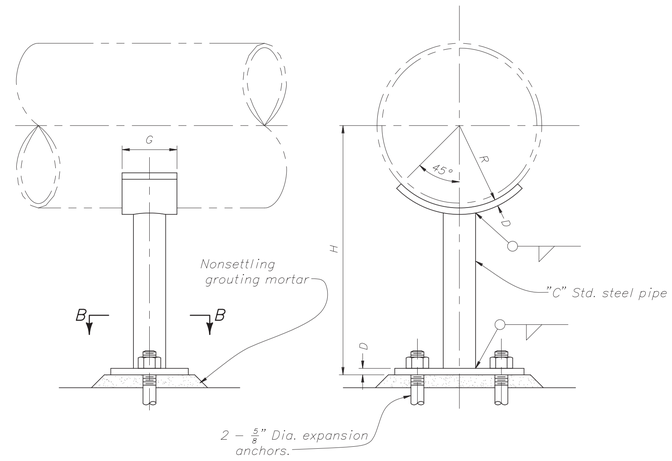

PIPE SUPPORT

TYPE B

PIPE SUPPORT

TYPE A

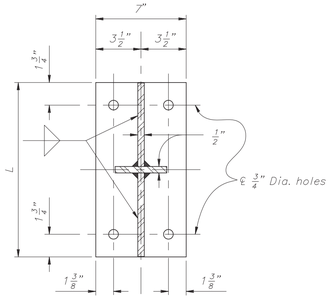

SECTION A–A

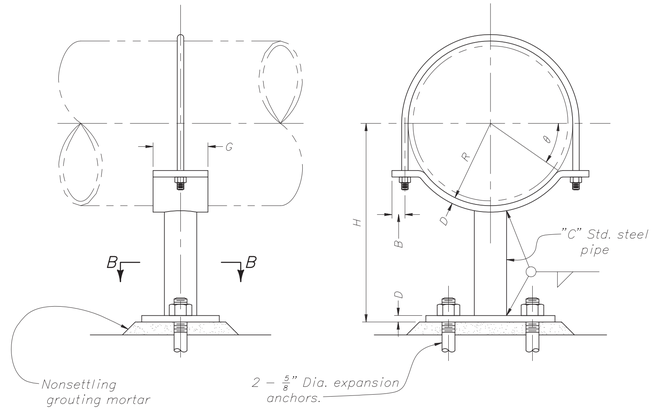

PIPE SUPPORT

TYPE C

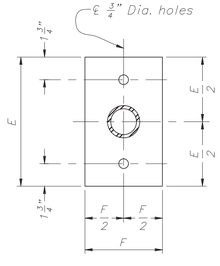

SECTION B–B

NOTES

$R = \frac{\text{Pipe O.D.}}{2}$

L=1.50R

H=Dimension as given on accompanying drawings.

Support type A for pipe 14" O.D. through 24" O.D.

Support type B & C for pipe up to and including 12 3/4" O.D.

REV. NO		
4	2002-09-04 D-J.E.A.	REDRAWN IN AUTOCAD.
	11-10-66 D J.J.W.	CHANGED ANCHOR SIZE AND ELIMINATED SLOTTED HOLES AND WASHERS.
	10-13-66 D J.J.W.	REVISED GROUTING MORTAR AND ANCHORS.
	6-13-55 D J.J.W.	REVISED TO CORRECT TYPES B AND C FOR SMALLER SIZES.

ALWAYS THINK SAFETY

UNITED STATES
DEPARTMENT OF THE INTERIOR
BUREAU OF RECLAMATION

STANDARD DESIGN

PIPE SUPPORTS

DRAWN W.F.B. SUBMITTED PETER RICE

TRACED M.D.B. RECOMMENDED W. T. WEBER

CHECKED J.J.W. APPROVED K. B. KEENER
ACT. ASST. CHIEF ENGINEER

CADD SYSTEM	CADD FILENAME	DATE AND TIME PLOTTED
AutoCAD Rel. 16.0s (LMS Tech)	40-D-5328.DWG	FEBRUARY 1, 2005 10:58
DENVER, COLORADO	NOV. 24, 1953	40-D-5328

Released

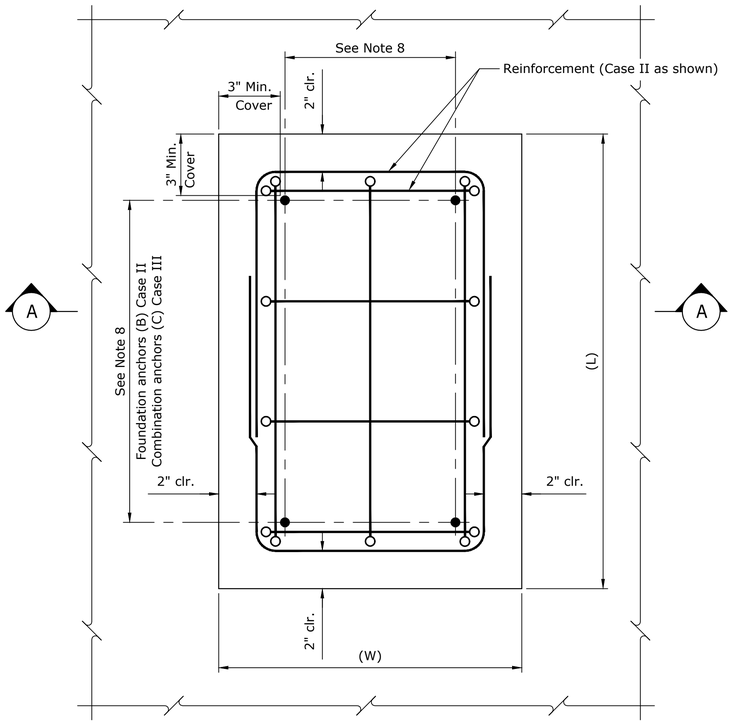

PLAN
3" = 1'-0"

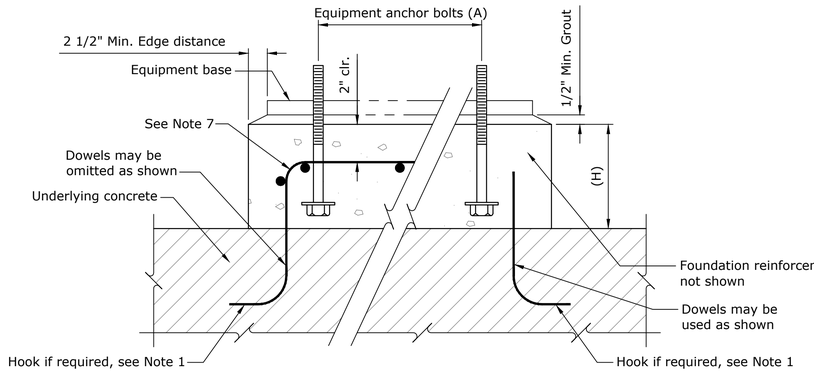

A SECTION (CASE I)
3" = 1'-0"

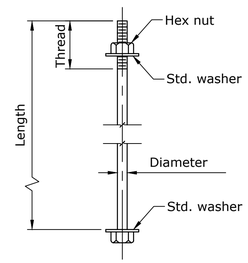

EQUIPMENT ANCHOR BOLT (A)
3" = 1'-0"

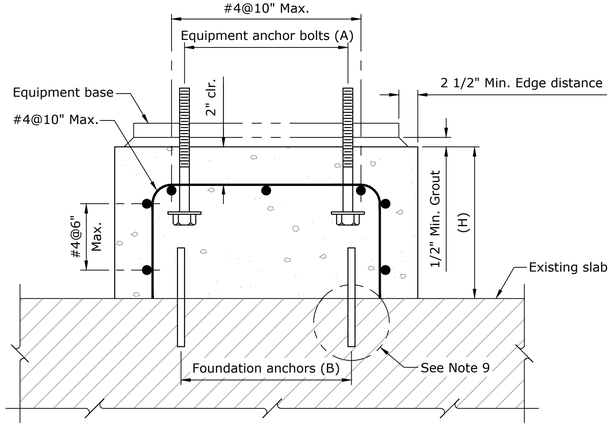

A SECTION (CASE II)
3" = 1'-0"

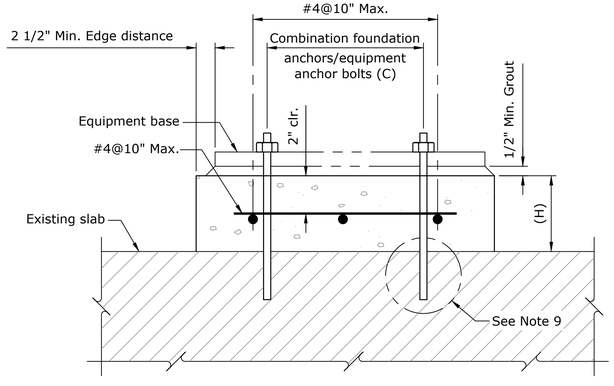

A SECTION (CASE III)
3" = 1'-0"

ABBREVIATIONS

W - Denotes width
L - Denotes length
H - Denotes height

NOTES

1. For general notes, see 40-D-60003 and 40-D-60004.
2. Foundation sizes (L, W, H) may be shown elsewhere or establish actual dimensions to accommodate equipment furnished.
3. Locate equipment anchor bolts (A) and combination foundation anchors/equipment anchor bolts (C) from equipment and set them by template.
4. If equipment anchor bolts (A) are too long for foundation height (H) or if (H) is less than 8 inches, use combination foundation anchors/equipment anchor bolts (C) see Case III.
5. Roughen existing concrete under all foundations.
6. For foundations of larger equipment see construction drawings.
7. Case I foundations can be used if the reinforcement is designed and positioned before the underlying concrete is placed. The final loads, location, and dimensions (L), (W), and (H) must be known for design. Design the reinforcement size, spacing, and embedment lengths in accordance with the ACI Standards as noted on 40-D-60003.
8. Size and space the foundation anchors for Case II and Case III foundations so that all loads are transferred from the foundation to the floor.
9. Drill holes for expansion-type anchors and epoxy-type anchors to the diameter and depth recommended by the manufacturer.

— BUREAU OF — RECLAMATION

ALWAYS THINK SAFETY

U.S. DEPARTMENT OF THE INTERIOR
BUREAU OF RECLAMATION
STANDARD DRAWINGS

STANDARD AND TYPICAL DESIGNS

CONCRETE STRUCTURES

REV NO		
4	D	MINOR REVISIONS. 2023-04-12 Barthel, Rodney J P.E.
3	D	UPDATED DRAWING TEXT STYLE, BORDER AND TITLE BLOCK TO CURRENT DRAWING RECORDS SYSTEM. REMOVED SUBMITTED SIGNATURE. 2019-12-12 Barthel, Rodney J P.E.
2	D	REVISED AND UPDATED TO AUTOCAD DRAWING. 1999-06-10 MRO
1	D	REVISED AND REDRAWN TO SHOW STATE-OF-THE-ART ANCHORAGE AND GENERAL UPDATING. 1983-04-28 KSK

DESIGNED JAMES R. VERNON
DRAWN KATHRYN S. KUGE
CHECKED JERRY R. DEXTER
TECH. APPR. W.R. ANDERSON
APPROVED PEER REVIEWER - CHIEF, STRUCT. AND ARCH. BRANCH
DENVER, CO 1983-04-27

SMALL E UIPMENT FOUNDATIONS

OUTLINE AND REINFORCEMENT PLAN AND SECTIONS

40-D-5599

SHEET 1 OF 1

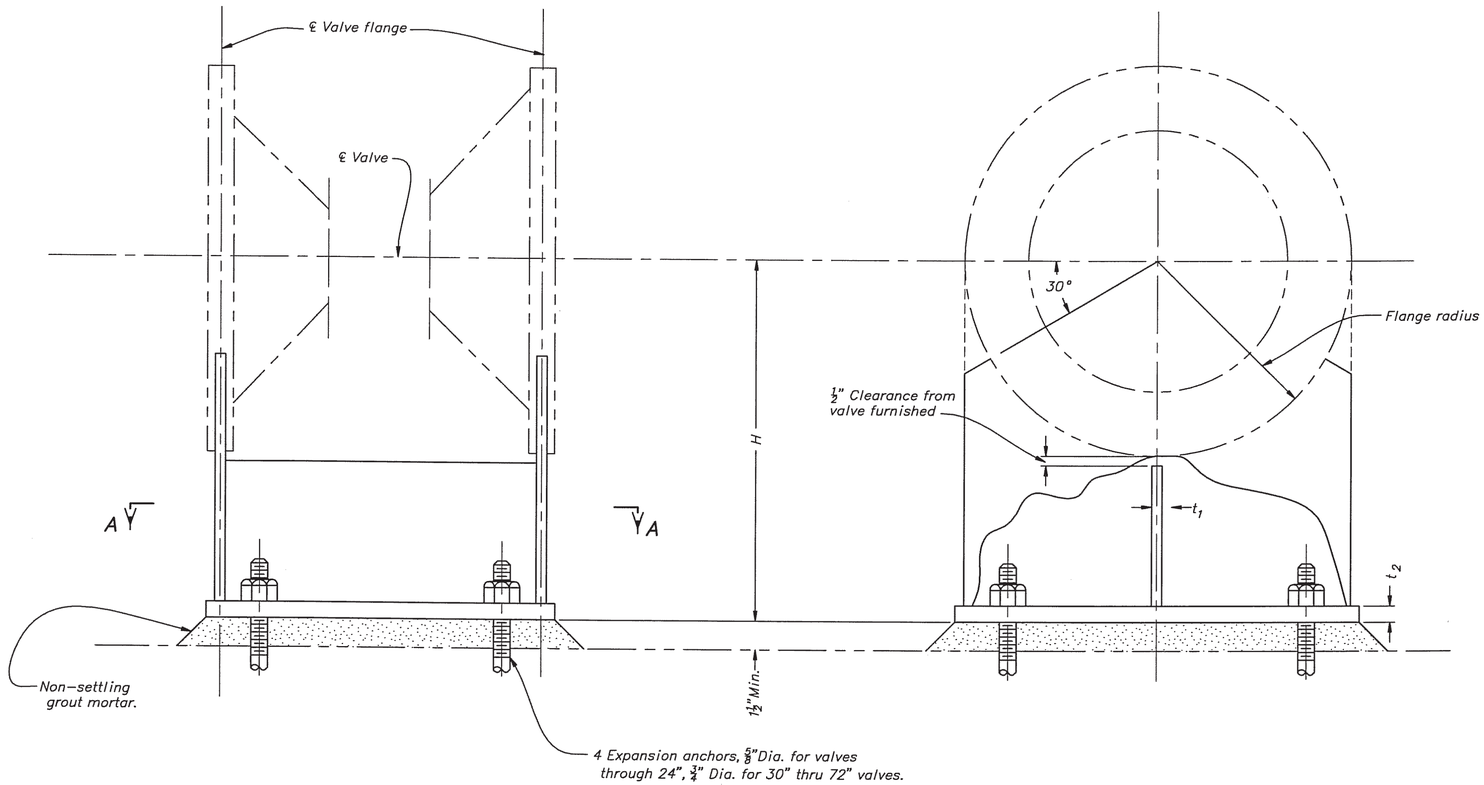

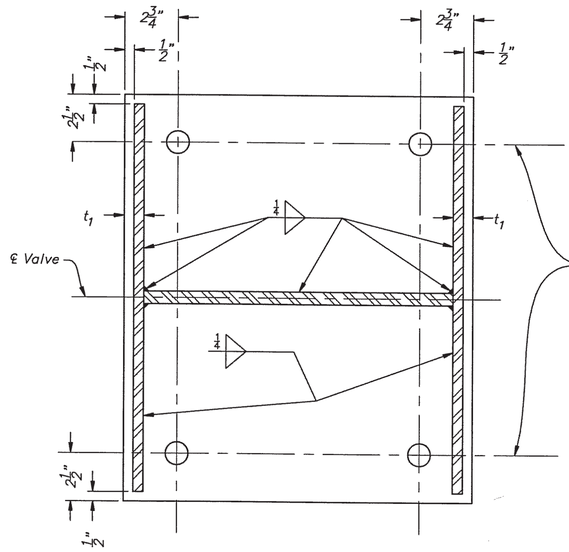

SECTION A–A

NOTES

Support shown shall be limited to nominal gate valve sizes of 6" D. thru 36" D. and nominal butterfly valve sizes of 6" D. thru 72"D.
Plate thickness t_1, shall be ½" for 6"D. thru 24"D. and ¾" for 30"D. thru 72"D. valves.
Plate thickness t_2, shall be ¾" for 6"D. thru 24"D. and 1" for 30" D. thru 72"D. valves.
H=Dimensions as given on accompanying drawing.

REV NO		
5	2004-10-01 D - R.S.D.	REDRAWN IN AUTOCAD.
	5-3-71 D - N.C.P.	CHANGED NOTES FOR VALVE SIZES.
	11-10-66 D - J.J.W.	CHANGED ANCHOR SIZES AND ELIMINATED SLOTTED HOLES AND WASHERS.
	10-13-66 D - J.J.W.	REVISED GROUTING MORTAR AND ANCHORS.
	4-14-65 D - F.B.	REVISED GROUT PAD DEPTH TO 1¼" MIN.

ALWAYS THINK SAFETY

UNITED STATES
DEPARTMENT OF THE INTERIOR
BUREAU OF RECLAMATION
STANDARD DESIGNS

VALVE SUPPORT

DRAWN H.W. SUBMITTED H. E. SHEDA
TRACED D.L.M. RECOMMENDED O. L. RICE
CHECKED N.C.P./J.J.W. APPROVED J. PARMAKIAN
ACTING CHIEF ENGINEER

CADD SYSTEM	CADD FILENAME	DATE AND TIME PLOTTED
AutoCAD Rel. 16.0s	40-D-5913.DWG	JANUARY 18, 2005 12:16
DENVER, COLORADO	JULY 1, 1963	40-D-5913

APR 04 2005

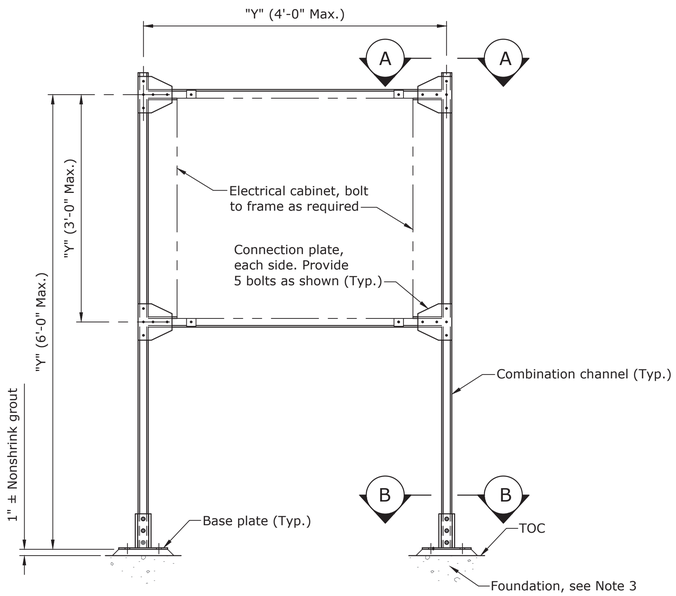

ELECTRICAL EQUIPMENT SUPPORT, TYPE I

(Est. Wt. 135 lbs.)

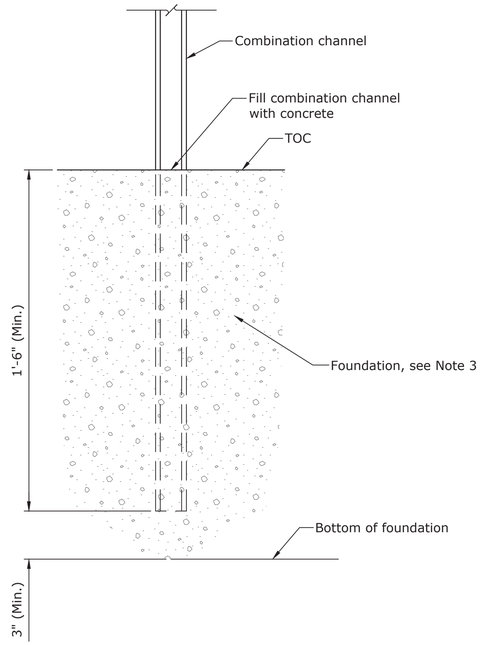

DETAIL - ALTERNATE ANCHORAGE

DESIGN CRITERIA

Electrical equipment support is designed to withstand a three-second gust basic wind speed of 90 mph in accordance with ASCE 7-05. It is assumed that no electrical cabinets will be installed in lower portion of frame.

GENERAL NOTES

ASCE denotes American Society of Civil Engineers

ASTM denotes American Society for Testing and Materials

AWS denotes American Welding Society

COR denotes Contracting Officer's Representative

Max. denotes maximum

Min. denotes minimum

Pl. denotes plate

TOC denotes top of concrete

Typ. denotes typical

All welds, sections and details are typical for all similar conditions.

Electro-galvanized finish combination channels.

Unless noted otherwise, galvanize base plate and plates after fabrication per ASTM A385.

Unless noted otherwise, galvanize hardware per ASTM A123.

Metal framing combination channels shall be as manufactured by Globe Strut, United Gypsum Corporation, 101 South Wacker Drive, Chicago, IL 60606; Unistrut Corporation, 35660 Clinton Street, Wayne, MI 48184; or Cooper B-Line, 509 West Monroe Street, Highland, IL 62249.

Combination Channels: Globe Strut No. G7612A, B-Line B12A, or Unistrut P5501; or equal, having the following essential characteristics: No. 12 gauge steel and channel 1 5/8-inch wide by 4 7/8-inch deep with 7/8-inch openings.

Connection Plates:
With five holes per Globe Strut G2057, B-Line B532, Unistrut P1726; or equal.
With seven holes per Globe Strut G2068, B-Line B334, Unistrut P1950; or equal.

Connection hardware shall be suitable for combination channel strut attachments.

Fabricated Metalwork:
Plates and bars_ _ _ _ _ _ _ _ _ _ _ _ _ _ _ _ _ ASTM A36

Length of bolt threads per ASME B18.2.1 and thread class 2 free-fit, American National coarse-thread series.

Unless noted otherwise, make all welds continuous and in the shop.

Start and stop all welds at center of member or tubing.

Unless noted otherwise, fabricator shall determine edge preparation and root opening for groove welds. Shop detail drawing shall show edge preparation.

Arc-Welding Electrodes: Filler metal and required shielding gases or fluxes shall be per AWS D1.1 with filler metal for steel having a minimum tensile strength of 70,000 psi.

Unless noted otherwise, all bolted connection bolt holes are standard 1/16" oversize.

"Y" dimensions are the responsibility of the Contractor and are based on the electrical cabinet furnished.

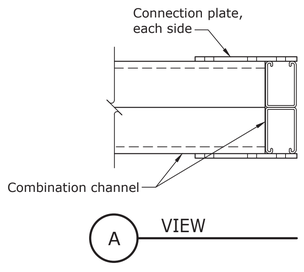

A VIEW

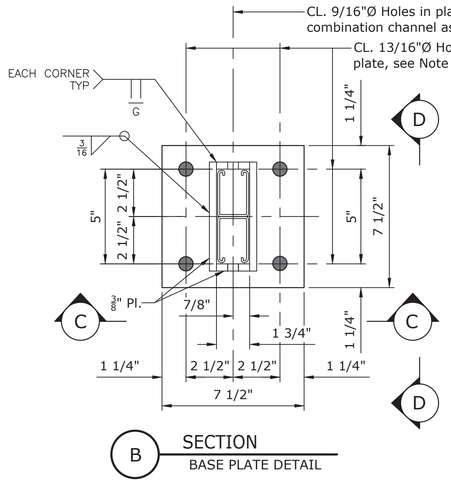

B SECTION
BASE PLATE DETAIL

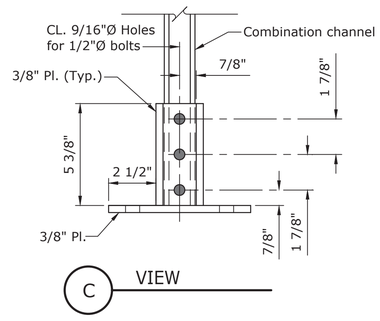

C VIEW

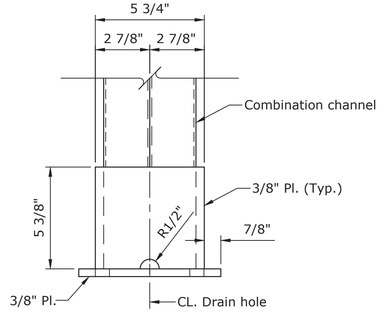

D VIEW

NOTES

1. Contractor determines final size of electrical equipment support based on electrical cabinet furnished.
2. Unless noted otherwise, or as directed by the foundation design engineer, install 5/8"Ø post-installed anchors with a minimum embedment of 6" or 5/8"Ø cast-in-place threaded anchors with a minimum embedment of 1'-6" having a minimum projection of 2".
3. Foundation design engineer shall verify foundation stability, concrete and reinforcement strength requirements, and anchorage requirements.
4. Install electrical equipment supports at locations shown on specifications drawings and/or as directed by COR.
5. Estimated electrical equipment support weight shown is based on maximum dimensions and five hole connection plates.

BUREAU OF RECLAMATION

ALWAYS THINK SAFETY

U.S. DEPARTMENT OF THE INTERIOR
BUREAU OF RECLAMATION
STANDARD DRAWINGS

STANDARD AND TYPICAL DESIGNS

MISCELLANEOUS METALWORK

REV NO		
2	2023-04-25	D UPDATED DRAWING TEXT STYLE TO CURRENT DRAWING RECORDS SYSTEM. MINOR REVISIONS.
	Putnam, Sara K P.E.	
1	2015-04-14	D MINOR MODIFICATIONS.
	BARTHEL, RODNEY J. P.E.	

Bernard Lajimodiere
DESIGNED
RBarthel
DRAWN
Olaff G. Huerta
CHECKED
Barthel, Rodney J P.E.
TECH. APPR.
Bernstein, Alfred I P.E.
APPROVED Plant Structures Group
ADMIN APPROVAL

DENVER, CO 2015-03-23

ELECTRICAL EQUIPMENT SUPPORT, TYPE I

SECTIONS AND DETAIL

40-D-60001

SHEET 1

Released

LAST SAVED DATE
2023-04-25
LAST SAVED BY
TRYAN

CAD SYSTEM
AutoCAD LT 2018
CAD FILENAME
40-D-60001-RD-1.DWG

Released

ABBREVIATIONS

add'l = additional
bf = bottom face
bl = bottom layer
br = bottom row
CJ = Construction joint
℄ = Centerline
CL. = Centerline
clr. = clear
Cr.J = Contraction joint
Ct.J = Control joint
ctr. = center or centers
d_b = nominal diameter of reinforcing bar
Dwg. = Drawing
ec = each corner
ef = each face
EJ = Expansion joint
El. = Elevation
eq. = equal or equally
eq. spc. = equally spaced, equal spaces
er = each row
es = each side
ew = each way
ff = far face
fr = far row
fs = far side
HP = High point
if = inside face
ir = inside row
ℓ_d = development length
ℓ_{dh} = development length of standard hook
LP = Low point
ml = middle layer
mr = middle row
nf = near face
nr = near row
ns = near side
OCJ = Optional construction joint
of = outside face
or = outside row
spc. = spaced or spaces
Std. = Standard
tf = top face
tl = top layer
TOC = Top of concrete
tr = top row
TW = Tailwater
Typ. = Typical
uv = uniformly varying lengths of bars between lengths shown
VCJ = Vertical construction joint
WP = Working point
WS = Water surface, Waterstop

CONCRETE SYMBOLS

The different concrete placements are indicated by the following symbols:

Concrete - First stage
Concrete - Second stage
Concrete - Blockout
Concrete - Existing or in adjacent structures
Concrete - Precast
Grout

NOTES TO DESIGNERS AND DETAILERS

1. Splice lengths shown in TABLES 3.0-60 thru 5.0-60 on 40-D-60004 are for Class B tension lap splices in accordance with ACI 318 and ACI 350. Assumed conditions for these tables in addition to the requirements shown on this drawing are uncoated reinforcement, normal weight concrete, reinforcement yield strength fy = 60,000 psi, and the transverse reinforcement index (K_{tr}) equal to zero. Splices or development lengths other than those shown in the tables must be detailed on the reinforcement specifications drawings.
2. Some factors which require additional consideration are: Beams or columns with ties, lightweight aggregate concrete, epoxy-coated reinforcement, excess reinforcement, bars in compression, bundled bars, and special seismic provisions.
3. The minimum centerline to centerline bar spacing requirements shown in TABLES 3.0-60 thru 5.0-60 on 40-D-60004 may not be applicable when using the provisions of ACI 350 Provision 10.6 for distribution of flexural reinforcement to control flexural cracking.
4. The minimum centerline to centerline bar spacing requirements shown in TABLES 3.0-60 thru 5.0-60 on 40-D-60004 is based on using 1.5 inch aggregate to calculate the spacings.
5. Recalculation of lap splice lengths and development lengths by the designer may be required for changes in combinations of controlling variables per ACI 318 Provisions 25.4 and 25.5, or ACI 350 Provisions 12.8 and 12.9.
6. Lap splices and development lengths for horizontal bars in walls are designated as top bar splices and development lengths unless otherwise noted or detailed on the reinforcement specifications drawings.
7. Development lengths for deformed bars in tension terminating in a standard hook shall be calculated by the designer in accordance with ACI 318 Provision 25.4.3.1 or ACI 350 Provision 12.8.5. In cases where a restricted member thickness does not allow for the full development length of a standard hook, the designer shall use a reduced tensile capacity.

CONCRETE OUTLINE GENERAL NOTES

CHAMFER :
Chamfer edges of permanently exposed concrete surfaces, except slabs and top edges of curbs, with a 45° bevel, $\frac{3}{4}$" x $\frac{3}{4}$", unless otherwise shown on the specifications drawings.

CONCRETE PLACEMENT :
Before placing concrete, see specifications and manufacturer's drawings, for all embedded material which is required in the placement.

DIMENSIONS :
All dimensions to a joint are to the centerline of the joint unless otherwise shown.
Dimensions to beams, columns, and walls are from reference lines or other control points.
Beam and slab depths shall be measured from the top of the structural slab.
Dimensions given for the depth of recesses are from the surface of the structural concrete.
Thicknesses shown for walls and slabs placed against soil or rock are minimum dimensions.

EMBEDDED MATERIALS :
Before placing concrete, care shall be taken that all embedded items are in position and securely fastened in place. Anchor bolt locations and settings are shown on the structural steel, miscellaneous metal, concrete, and equipment drawings. Conduits and grounding cables are shown on the manufacturer's drawings and the electrical drawings. All projecting items, including waterstops, shall be supported and protected from damage and exposure.

FINISHES :
For location and classes of finishes for formed and unformed concrete surfaces, see the specifications drawings and/or paragraphs.

JOINTS :
All construction joints, identified as CJ, shall be provided where shown on the drawings. All optional construction joints, identified as OCJ, are to reduce the volume of placements or to facilitate construction. If optional joints are provided they shall be only at the locations shown. Relocation, addition, or elimination of construction joints will be subject to approval.

TOOLED EDGES :
Tool exposed edges of slabs and top edges of curbs to a radius of $\frac{1}{4}$", unless otherwise shown on the specifications drawings.

REINFORCEMENT GENERAL NOTES (See Note 4)

ACCESSORIES :
Bar supports, spacers, and other accessories are not shown on the design drawings. The recommendations of the ACI Detailing Manual-2020 (MNL-66), or other approved supporting systems shall be used.

CODE AND DETAILING REFERENCES :
ACI Building Code Requirements for Structural Concrete (ACI 318-19).
ACI Detailing Manual-2020 (MNL-66).
ACI Code Requirements for Environmental Engineering Concrete Structures (ACI 350-20).

COVER :
Place the reinforcement so that the clear distance between face of concrete and nearest reinforcement is 2" for #8 bars and smaller, and 3" for #9 bars thru #11 bars, unless otherwise shown on specifications drawings. Provide 3" clear distance from face of concrete for all bars when concrete exposure is cast against and permanently in contact with the ground. For corner bars cover, see ADDITIONAL REINFORCEMENT AROUND OPENINGS AND RECESSES, SECTION A-A on 40-D-60004. Clear distance is to the design dimension line.
Reinforcement parallel to construction joints shall have a minimum of 2" clear cover.

DIMENSIONS :
Dimensions are to the centerline of the bars except for embedment of hooks, which are dimensioned to the outside of the bar.
Clear cover dimensions are marked "clr." and are dimensioned to the outside of the bar.

PLACING :
Reinforcement at small openings (Max. 1'-6") in walls and slabs may be spread apart not more than 1.50 times the bar spacing.
Unless otherwise shown on the specifications drawings, reinforcement shall be adjusted laterally to maintain a clear distance of at least 1" between the reinforcement and keys, waterstops, anchor bolts, form ties, conduits, and other embedded materials.
In heavily reinforced areas, relocation of the embedded material or cutting of reinforcement must be approved.
When bars are bent due to offsets less than 3" and recesses less than 3" deep, the slope of the inclined portion must not exceed 6 to 1.
Reinforcement parallel to anchor bolts or other embedded material shall be placed to maintain a clear distance of at least 1.33 times the maximum size aggregate.

PLAIN DOWELS :
Plain dowels across contraction joints shall be smooth bars uniformly coated with a film of oil before concrete placement.

REINFORCEMENT DOWELS :
Unless otherwise shown, dowels indicated on the drawing, such as #8(d), shall be embedded a length equal to l_d and shall have a projection equal to that required for lap splicing to a bar of the same diameter.

SPACING :
The first and last bars in walls and slabs, stirrups in beams, and ties in columns are to start and end at a maximum of one half of the adjacent bar spacing. The minimum edge spacing shall be $2.5d_b$. For #9 thru #11 bars where minimum centerline bar spacing is 6" and the lap splice lengths requiring staggered placement shown in TABLES 3.0-60 thru 5.0-60 on 40-D-60004 are used, the minimum edge spacing shall be 3".

SPLICES :
The minimum length of lap for splicing parallel bars in tension shall be as given in TABLES 3.0-60 thru 5.0-60 on 40-D-60004.
Staggered lap splices shall be separated to give 12 inches clear between ends of adjacent splices.
Bars spliced by noncontact lap splices shall not be spaced transversely farther apart than one-fifth the required lap splice length, nor 6" on centers.
When reinforcing bars of different size are to be spliced, splice length shall be the larger of l_d of larger bar and tension lap splice length of smaller bar.
Splices are to be made so that the required clear distances to face of concrete will be maintained.

STANDARD HOOKS FOR DEVELOPMENT OF DEFORMED BARS IN TENSION :
90-degree bend plus $12d_b$ extension at free end of the bar.
180-degree bend plus $4d_b$ extension, but not less than $2\frac{1}{2}$", at the free end of the bar.

STANDARD HOOKS FOR STIRRUPS, TIES, AND HOOPS :
#5 bar and smaller, 90-degree bend plus $6d_b$ extension, but not less than 3", at the free end of the bar.
#6, #7, and #8 bars, 90-degree bend plus $12d_b$ extension at the free end of the bar.
#8 bars and smaller, 135-degree bend plus $6d_b$ extension, but not less than 3", at the free end of the bar.
#8 bars and smaller, 180-degree bend plus $4d_b$ extension, but not less than 2.5", at the free end of the bar.

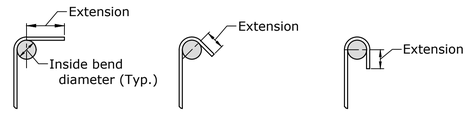

90-degree 135-degree 180-degree

TABLE OF INSIDE BEND DIAMETERS (INCHES)

BAR NO.	3	4	5	6	7	8	9	10	11
Standard	$2\frac{1}{4}$	3	$3\frac{3}{4}$	$4\frac{1}{2}$	$5\frac{1}{4}$	6	$9\frac{1}{2}$	$10\frac{3}{4}$	12
Stirrups, ties, and hoops	$1\frac{1}{2}$	2	$2\frac{1}{2}$	$4\frac{1}{2}$	$5\frac{1}{4}$	6			

SYMBOLS :
Bars shown thus:

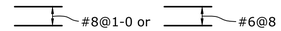

Indicate a group of the same size bars equally spaced.

An open circle at the end of a bar indicates a bend with the bar turned away from the observer.
A closed circle at the end of a bar indicates a bend with the bar turned towards the observer.

Splices shown thus indicate a lap splice, not a bend in the bar.

Mechanical splice
Headed deformed bar

NOTES

1. This drawing shall be used in conjunction with 40-D-60004.
2. For Minimum Requirements For Detailing Reinforcement, see 40-D-60004.
3. Unless otherwise shown on the concrete outline and/or reinforcement specifications drawings, the notes shown are minimum requirements and typical for all drawings that refer to this drawing.
4. Unless otherwise shown on the reinforcement specifications drawings or 40-D-60004, follow the recommendations established by the ACI Detailing Manual - 2020 (MNL-66).
5. # Denotes reinforcement bar number.
6. Numerals in parentheses ( ) following notes, details, and section letters or numbers indicate the number of the drawing upon which the section or detail is indicated or shown. For example (60524) denotes drawing XXX-D-60524. The letters XXX shown here will be numbers denoting the project.

THIS DRAWING SUPERCEDES DRAWINGS 40-D-6263 AND 40-D-7012

RECLAMATION
Managing Water in the West

ALWAYS THINK SAFETY

U.S. DEPARTMENT OF THE INTERIOR
BUREAU OF RECLAMATION
STANDARD DRAWINGS

STANDARD AND TYPICAL DESIGNS

CONCRETE OUTLINE AND REINFORCEMENT

REV NO		
2	2022-09-21	D REVISED TO CONFORM TO ACI 350-20 AND MINOR REVISIONS.
	Barthel, Rodney I P.E.	
1	2020-05-20	D REVISED TO CONFORM TO ACI 318-19 AND MINOR REVISIONS.
	Barthel, Rodney, P.E.	

R. BARTHEL
DESIGNED
R. RODRIGUEZ
DRAWN
J. WAGNER
CHECKED
McGovern, Robert K P.E.
TECH. APPR.
Bernstein, Alfred I
APPROVED
PEER REVIEWER - Plant Structures Group

DENVER, CO 2016-09-23

GENERAL NOTES FOR CONCRETE OUTLINE AND REINFORCEMENT

40-D-60003

SHEET 1 OF 2

DATE AND TIME PLOTTED
MAY 27, 2020 13:55
PLOTTED BY
RRODRIGUEZ

CAD SYSTEM
AutoCAD Rel. 22.0s
CAD FILENAME
40-D-60003-RD-1.DWG

Released

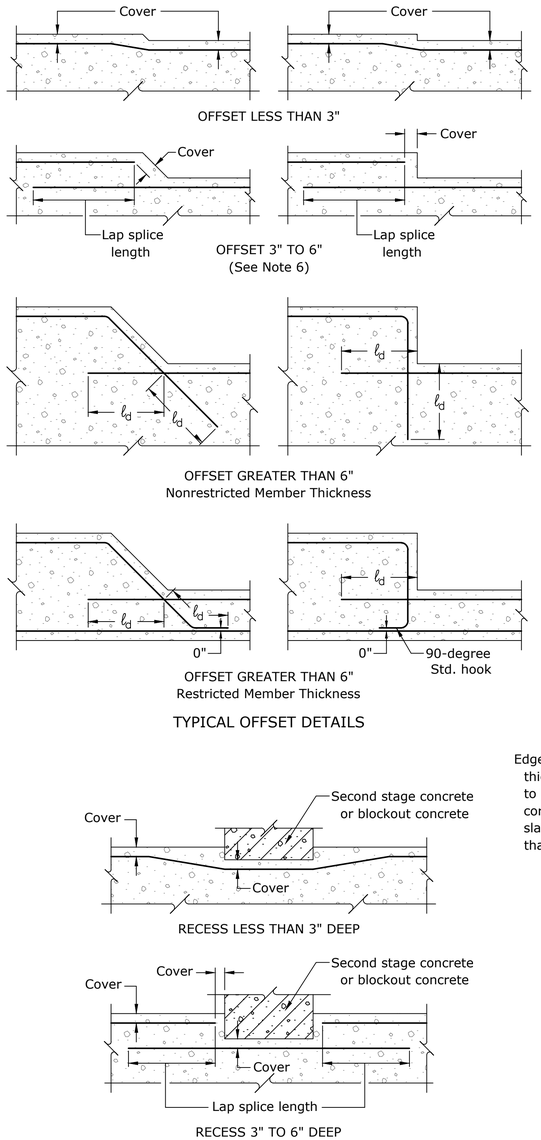

TYPICAL OFFSET DETAILS

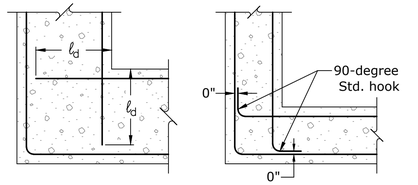

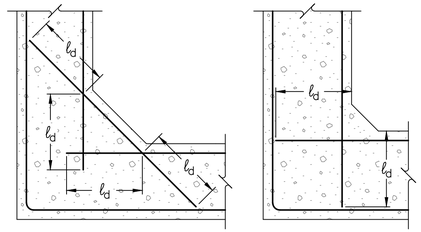

TYPICAL CORNER DETAILS

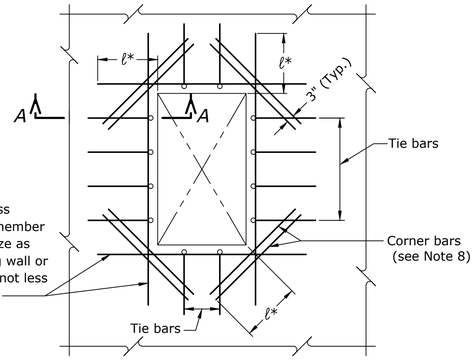

$\ell^* = \ell_d$, But not less than 24 inches

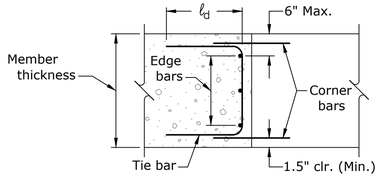

SECTION A-A

RECESS LESS THAN 3" DEEP

RECESS 3" TO 6" DEEP (See Note 6)

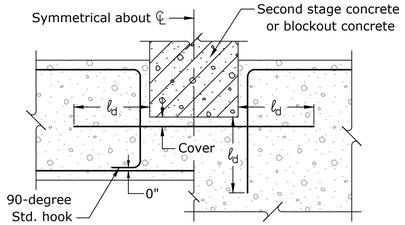

RECESS GREATER THAN 6"

TYPICAL BLOCKOUT RECESS DETAILS
(Second stage concrete shown)

OPENINGS :
TABLE FOR ADDITIONAL REINFORCEMENT

MEMBER THICKNESS	TIE BARS	EDGE BARS	CORNER BARS
Less than 9"	None	1 - ctr.	2 - #4 ctr.
9" thru 1'-5"	None	2 - (1 ef)	4 - #4 (2 ef)
1'-6" thru 3'-0"	#4@1'-0"	3 - eq. spc.	4 - #4 (2 ef)
Over 3'-0"	#6@1'-0"	Spc. @ 1'-0"	4 - #4 (2 ef)

Omit edge and tie bars along sides of openings where opening dimension is less than 1'-6".
Omit corner bars at sides of openings adjacent to floors, walls, or beams.
Omit corner bars if both dimensions of opening are less than 1'-6".

RECESSES :
Use corner bars in face of recesses deeper than 4" if either dimension of recess is equal to or greater than 1'-6".

ADDITIONAL REINFORCEMENT AROUND OPENINGS AND RECESSES

f'c = 3,000 psi TABLE 3.0-60 fy = 60,000 psi

Bar size No. IP (SM)	MINIMUM ℄ to ℄ BAR SPACING (INCHES)	LAP SPLICE LENGTH (INCHES)		DEVELOPMENT LENGTH ℓ_d (INCHES)	
		TOP BARS	OTHER BARS	TOP BARS	OTHER BARS
3 (10)	3	17	13	13	12
4 (13)	3	23	18	18	14
5 (16)	3.5	28	22	22	17
6 (19)	4	34	26	26	20
7 (22)	4.5	49	38	38	29
8 (25)	5	56	43	43	33
9 (29)	6	63	49	49	38
10 (32)	6.5	71	55	55	42
11 (36)	7.5	79	61	61	47
10 (32)	6	75	58	58	45
11 (36)	6	93	71	71	55

f'c = 4,000 psi TABLE 4.0-60 fy = 60,000 psi

Bar size No. IP (SM)	MINIMUM ℄ to ℄ BAR SPACING (INCHES)	LAP SPLICE LENGTH (INCHES)		DEVELOPMENT LENGTH ℓ_d (INCHES)	
		TOP BARS	OTHER BARS	TOP BARS	OTHER BARS
3 (10)	3	15	12	12	12
4 (13)	3	20	15	15	12
5 (16)	3.5	25	19	19	15
6 (19)	4	29	23	23	18
7 (22)	4.5	43	33	33	25
8 (25)	5	49	37	37	29
9 (29)	6	55	42	42	33
10 (32)	6.5	62	47	47	37
11 (36)	7.5	68	53	53	41
10 (32)	6	65	50	50	39
11 (36)	6	80	62	62	48

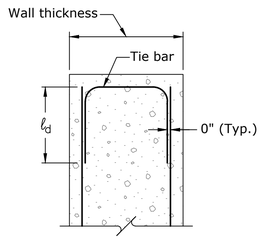

TYPICAL TOP OF WALL DETAIL

For wall thickness less than 1'-6", tie bars not required.
For wall thickness 1'-6" and larger, tie bars to be #6@1'-0" unless otherwise shown on reinforcement specifications drawings.

f'c = 3,500 psi TABLE 3.5-60 fy = 60,000 psi

Bar size No. IP (SM)	MINIMUM ℄ to ℄ BAR SPACING (INCHES)	LAP SPLICE LENGTH (INCHES)		DEVELOPMENT LENGTH ℓ_d (INCHES)	
		TOP BARS	OTHER BARS	TOP BARS	OTHER BARS
3 (10)	3	16	12	12	12
4 (13)	3	21	16	16	13
5 (16)	3.5	26	20	20	16
6 (19)	4	31	24	24	19
7 (22)	4.5	45	35	35	27
8 (25)	5	52	40	40	31
9 (29)	6	59	45	45	35
10 (32)	6.5	66	51	51	39
11 (36)	7.5	73	56	56	43
10 (32)	6	70	54	54	41
11 (36)	6	86	66	66	51

f'c = 4,500 psi TABLE 4.5-60 fy = 60,000 psi

Bar size No. IP (SM)	MINIMUM ℄ to ℄ BAR SPACING (INCHES)	LAP SPLICE LENGTH (INCHES)		DEVELOPMENT LENGTH ℓ_d (INCHES)	
		TOP BARS	OTHER BARS	TOP BARS	OTHER BARS
3 (10)	3	14	12	12	12
4 (13)	3	19	14	14	12
5 (16)	3.5	23	18	18	14
6 (19)	4	28	21	21	17
7 (22)	4.5	40	31	31	24
8 (25)	5	46	35	35	27
9 (29)	6	52	40	40	31
10 (32)	6.5	58	45	45	35
11 (36)	7.5	64	50	50	38
10 (32)	6	61	47	47	37
11 (36)	6	76	58	58	45

f'c = 5,000 psi TABLE 5.0-60 fy = 60,000 psi

Bar size No. IP (SM)	MINIMUM ℄ to ℄ BAR SPACING (INCHES)	LAP SPLICE LENGTH (INCHES)		DEVELOPMENT LENGTH ℓ_d (INCHES)	
		TOP BARS	OTHER BARS	TOP BARS	OTHER BARS
3 (10)	3	13	12	12	12
4 (13)	3	18	14	14	12
5 (16)	3.5	22	17	17	13
6 (19)	4	26	20	20	16
7 (22)	4.5	38	29	29	23
8 (25)	5	44	34	34	26
9 (29)	6	49	38	38	29
10 (32)	6.5	55	43	43	33
11 (36)	7.5	61	47	47	36
10 (32)	6	58	45	45	35
11 (36)	6	72	55	55	43

Top bars are defined as horizontal reinforcement with a casting position of more than 12 inches of fresh concrete placed below the bar (see NOTES TO DESIGNERS AND DETAILERS, Note 5 on 40-D-60003).
Splices must be staggered.
IP = Inch-pound bar size designation.
SM = Soft metric bar size designation.
Splice lengths are based on Class B tension lap splices.

NOTES

1. This drawing shall be used in conjunction with 40-D-60003.
2. For Concrete Outline General Notes and Reinforcement General Notes, see 40-D-60003.
3. For ABBREVIATIONS and CONCRETE SYMBOLS, see 40-D-60003.
4. For NOTES TO DESIGNERS AND DETAILERS, see 40-D-60003.
5. Unless otherwise shown on the reinforcement specifications drawings, the details shown are minimum requirements and typical for all reinforcement drawings that refer to this drawing.
6. This detail may not be appropriate for tension areas of shallow structural members. If in doubt, use detail for recess greater than 6".
7. TABLES 3.0-60 thru 5.0-60 generated using the general development length equations ACI 318 Eq. 25.4.2.4a and ACI 350 Eq. 12-1.
8. Development of diagonal corner bars in close proximity to another opening, wall or slab, will require bends or hooks.

THIS DRAWING SUPERCEDES DRAWING 40-D-6263

RECLAMATION
Managing Water in the West

ALWAYS THINK SAFETY

U.S. DEPARTMENT OF THE INTERIOR
BUREAU OF RECLAMATION
STANDARD DRAWINGS

STANDARD AND TYPICAL DESIGNS

CONCRETE OUTLINE AND REINFORCEMENT

REV NO		
3	D	2022-09-21 Barthel, Rodney J P.E. MINOR REVISIONS.
2	D	2020-05-20 Barthel, Rodney, P.E. REVISED TO CONFORM TO ACI 318-19 AND MINOR REVISIONS.
1	D	2016-12-08 McGovern, Robert K P.E. MINOR REVISION

R. BARTHEL
DESIGNED
R. RODRIGUEZ
DRAWN
L. NGUYEN
CHECKED
McGovern, Robert K P.E.
TECH. APPR.
Bernstein, Alfred I
APPROVED
PEER REVIEWER - Plant Structures Group

DENVER, CO 2016-09-23

MINIMUM REQUIREMENTS FOR DETAILING REINFORCEMENT

40-D-60004

SHEET 2 OF 2

DATE AND TIME PLOTTED
MAY 27, 2020 13:58
PLOTTED BY
RRODRIGUEZ

CAD SYSTEM
AutoCAD Rel. 23.0s
CAD FILENAME
40-D-60004-RD-2.DWG

Released

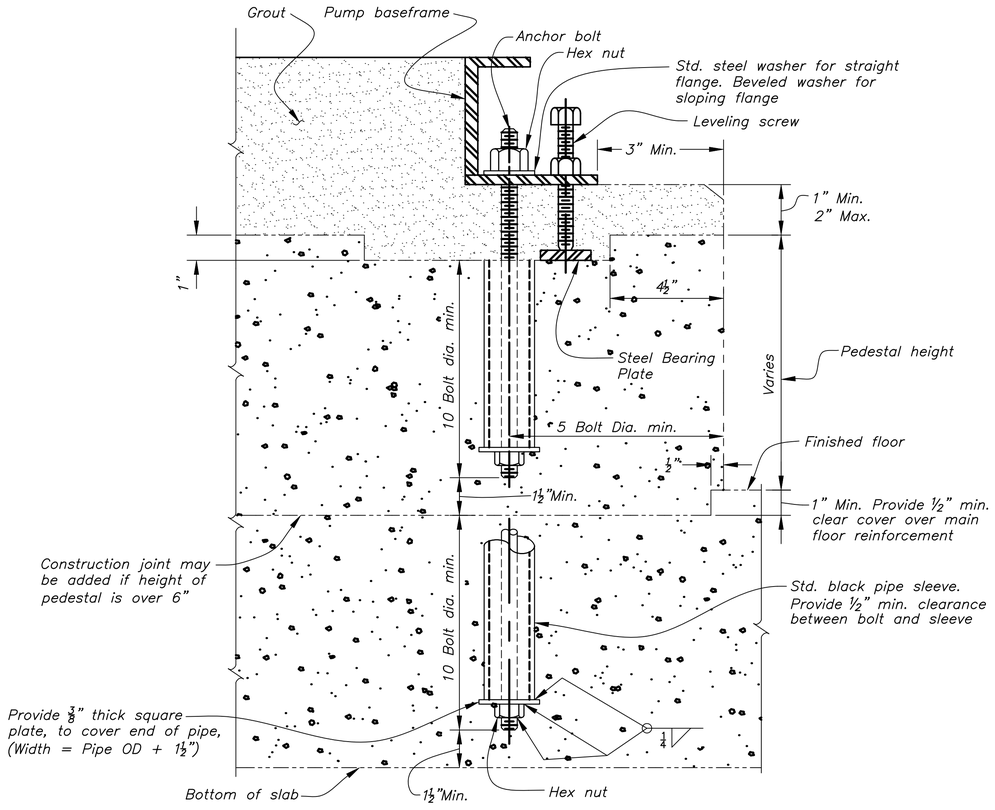

HORIZONTAL UNIT
(PUMP MOUNTED ON PEDESTAL)

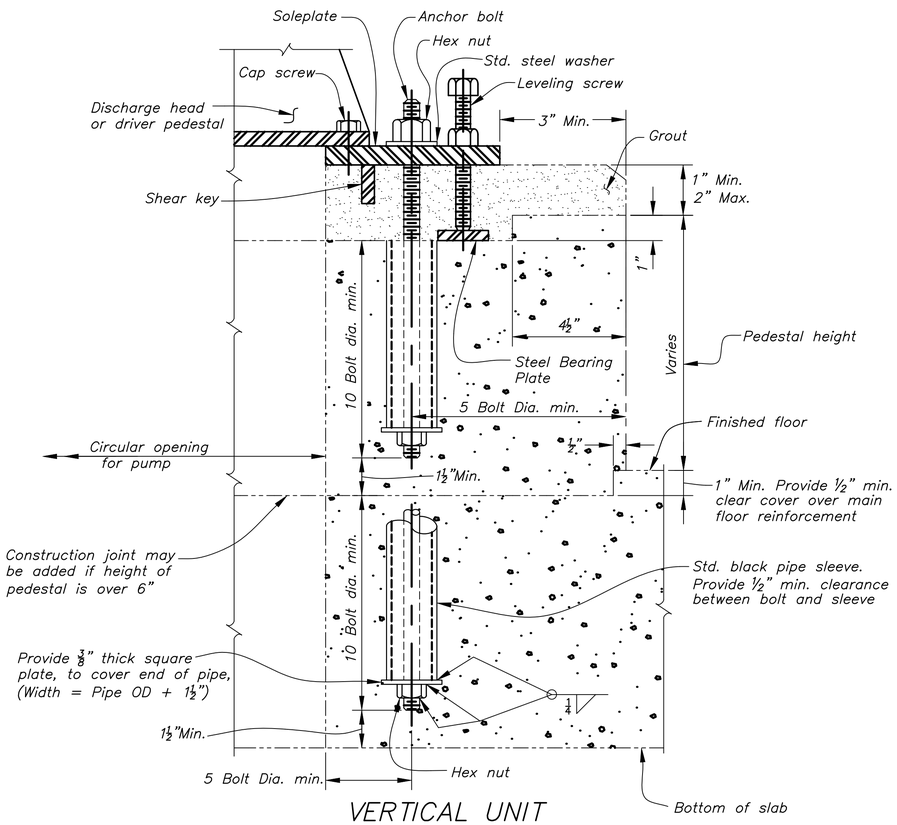

VERTICAL UNIT
(PUMP MOUNTED ON PEDESTAL)

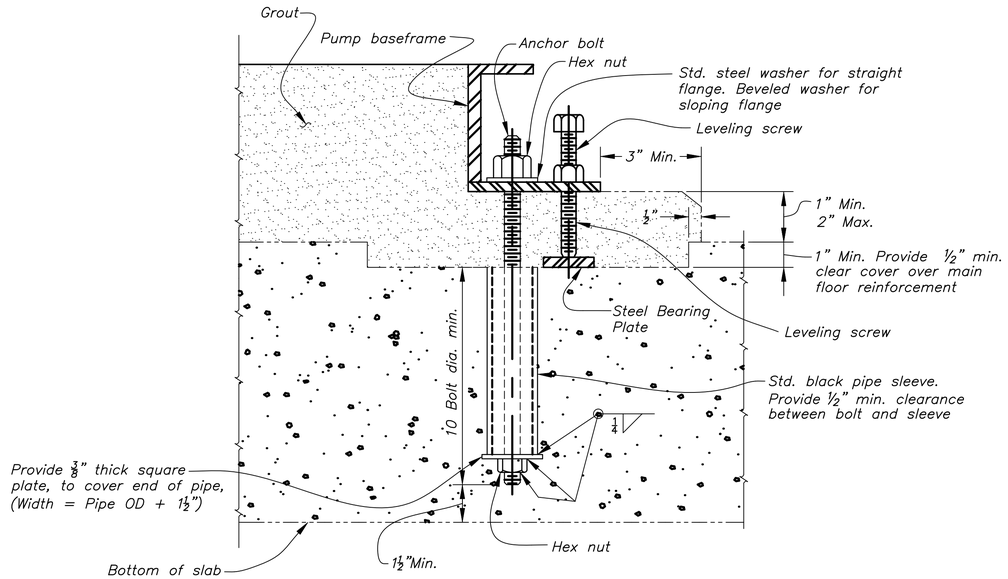

HORIZONTAL UNIT
(PUMP MOUNTED IN RECESS)

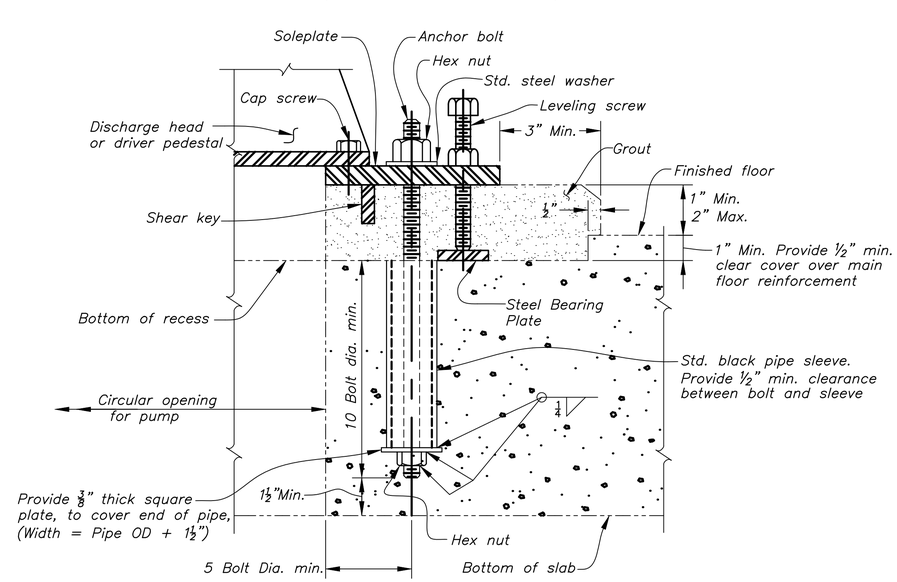

VERTICAL UNIT
(PUMP MOUNTED IN RECESS)

NOTES

1. Pumps may be mounted on pedestals or in recesses depending on final dimensions supplied by pump manufacturer.
2. Coat threads of leveling screws with a bond breaking compound to prevent grout adherence.
3. Isolate anchor bolt above square plate from grout preventing adherence and preventing embedment of anchor bolt surface in grout. Isolation to allow tensioning of anchor bolt throughout anchor's entire length.
4. Prepare concrete and soleplate or baseframe in accordance with grout manufactures recommendations
5. Remove leveling screws after grout has cured and tension anchors.
6. Fill and seal leveling screw holes to prevent ingress of moisture after removing leveling screws.
7. Dimension of anchor bolts shall conform to the pump manufacturers' requirements.
8. Mountings and notes shown hereon for pumps apply equally to horizontal turbines.

REV NO		
4	2019-04-29 D McCann, Alan M P.E.	REMOVED HEX LEVELING NUT AND ADDED LEVELING SCREW
REV NO 3	2006–08–15 D – D.W.K.	REDRAWN AND UPDATED IN AUTOCAD
REV NO 2	1984–09–10 D – D.M.D	ADDED NOTE REGARDING HORIZONTAL TURBINES
REV NO 1	1967–07–03 D – J.P.C.	GROUT CHANGES TO GROUTING MORTAR.

THIS DRAWING SUPERSEDES DWG. 40–D–5364 AND 5641

ALWAYS THINK SAFETY

UNITED STATES
DEPARTMENT OF THE INTERIOR
BUREAU OF RECLAMATION

STANDARD DESIGN

PUMP MOUNTING

HORIZONTAL AND VERTICAL UNITS

DRAWN C.H.T. SUBMITTED EDWIN ROSE
TRACED J.J.P. RECOMMENDED H. A. A.
CHECKED T.B. APPROVED K. B. KEENER
CHIEF ENGINEER

CADD SYSTEM	CADD FILENAME	DATE AND TIME PLOTTED
AutoCAD Rel. 20.0s	40D6006 R4 EPOXY.DWG	OCTOBER 25, 2017 12:35
DENVER, COLORADO	AUG. 10, 1964	40–D–6006

LINE	Identification of motor (Unit No., Item No., etc as applicable) (Note 2)						
1	Manufacturer (Nameplate)						
2	Horsepower rating (Nameplate)						
3	Time rating (Nameplate)						
4	Temperature rise of windings by resistance (Not ambient temperature)						
5	Calculated starting time of the pumping unit under specified conditions, seconds (Note 1)						
6	Rated load speed. R.P.M. (Nameplate)						
7	Number of phases (Nameplate)						
8	Armature connected (delta or wye)						
9	Voltage (Nameplate)						
10	Rated load amperes (Nameplate)						
11	Code letter for locked-rotor Kva/hp. (Nameplate)						
12	Design letter						
13	Power factor at nameplate rated load						
	Power factor at 3/4 load (Note 4)						
	Power factor at 1/2 load (Note 4)						
14	Capacitor KVAR rating to correct power factor over range of pump (Notes 3 and 4)						
15	Corrected power factor (minimum) (Note 4)						
16	Efficiency at nameplate rated load						
	Efficiency at 3/4 load (Note 4)						
	Efficiency at 1/2 load (Note 4)						
17	Type of enclosure (open, drip-proof, TEFC)						
18	Stator insulation, class						
19	Type of stator windings (form wound or random wound)						
20	Type of bearings (ball, roller, sleeve)						
21	Net weight each motor, lbs.						
22	Motor WR^2 - ($lb-ft^2$)						

NOTES

1. Applicable only to pumping units with motors above 20 hp.
2. Provide column for each different size motor at each plant or structure. All reference to nameplates means the date shall be as it appears on the nameplate furnished.
3. Capacitor KVAR rating should be at capacitor rated voltage but capacitor must be sized for operation at motor rated voltage.
4. Applicable only to units where power factor correction is specified.

Specifications or Solication No. _____

Project _____

Name of structure _____

2 - 19 - 99 D - L.J.R.	REVISED AND REDRAWN INTO AUTOCAD FORMAT.
8 - 1 - 73 D - P.L.A.	GENERAL REVISIONS, RETRACED

ALWAYS THINK SAFETY

UNITED STATES
DEPARTMENT OF THE INTERIOR
BUREAU OF RECLAMATION

STANDARD DESIGNS

INDUCTION MOTORS

DESIGN AND NAMEPLATE DATA TO BE FURNISHED BY THE CONTACTOR

DESIGNED R.S.N. SUBMITTED J.V BAPTIST

TRACED L. Mc Farlane RECOMMENDED H.G. ARTHUR

CHECKED E.M.J. - P.L.A. APPROVED B.P. BELLPORT
CHIEF ENGINEER

CADD SYSTEM	CADD FILENAME	DATE AND TIME PLOTTED
AutoCAD Rel. 15.05	40D6032.DWG	NOVEMBER 20, 2001 13:42
DENVER, COLORADO MARCH 18, 1965		40-D-6032

LGAMUCIE

SUDDEN PRESSURE RELAY AND/OR BUCHHOLZ RELAY FAULT PROTECTION CONTROL

(See Note 1)

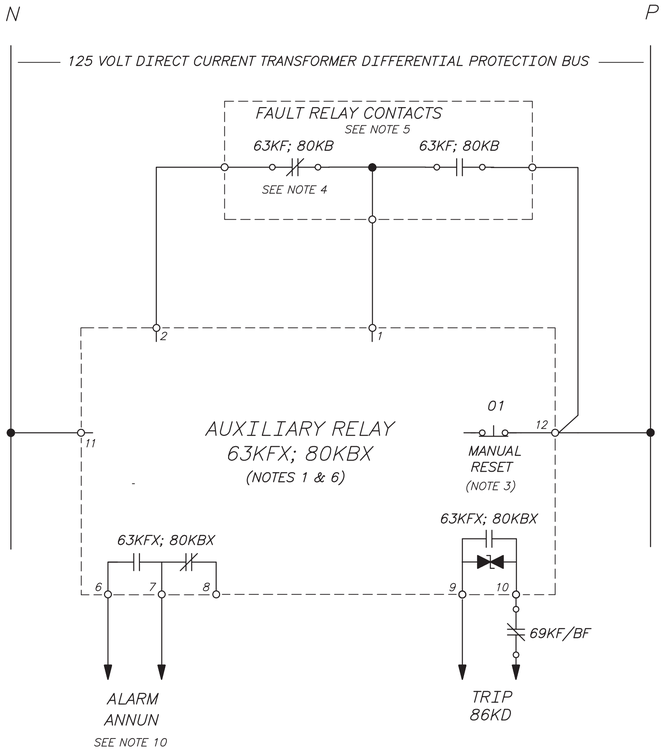

BUCHHOLZ RELAY GAS ACCUMULATION

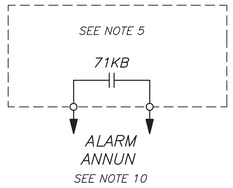

AUX. RELAY CONTROL SWITCH

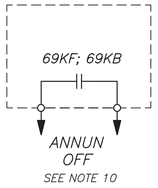

69KF and/or 69KB ESCUTCHEON ENGRAVING

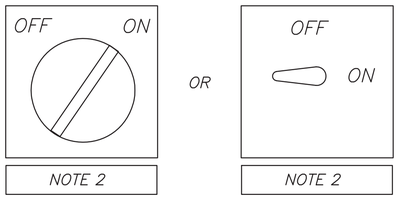

69KF and/or 69KB SWITCH DEVELOPMENT

CONTACTS HANDLE END	No.	POSITIONS ON	OFF
1 1C 2C 2	1	X	
	2		X
3 3C 4C 4	3	X	
	4		X

X – DENOTES CONTACT CLOSED

TRANSF. ELECT. CONTROL AND MONITORING DEVICE TRIP CONTACTS

(See Notes 7 & 8)

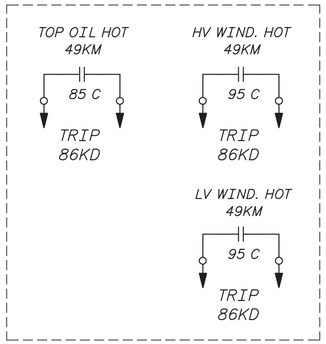

TRANSF. ELECT. CONTROL AND MONITORING DEVICE ALARMS

(See Notes 7 & 8)

(Self cooled, conservator transformer shown)

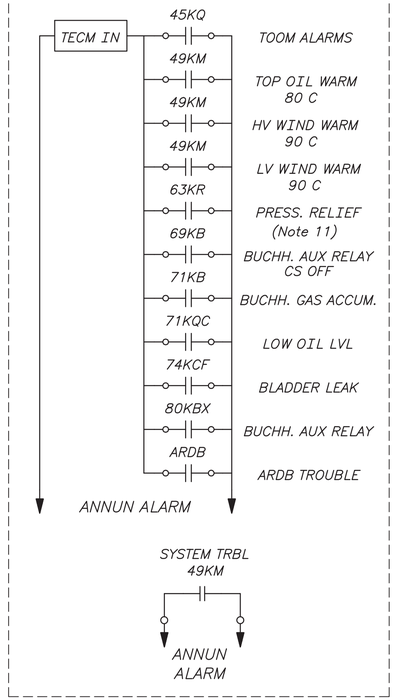

POWER TRANSFORMER PROTECTIVE DEVICE DESIGNATIONS (1)

DESIGNATION (2)	DEVICE	LOCATION
26KQ	Top Oil Temperature Gauge	Tank (3)
26KQD	Top Oil RTD Probe	Tank (3)
39KC	Conservator Bladder Leak Sensor	Conservator Bladder
45KQ	Transf. Online Oil Monitor (TOOM)	Tank
49KM	Transformer Electronic Control & Monitoring (TECM) Device	Control Cabinet
49KWH; 49KWL	Winding temperature gauges (H–High side; L–Low side)	Tank (3)
49KW1D; 49KW2D	Winding temperature RTD's (1–High side; 2–Low side)	Tank (3)
62KAF	Cooling Auxiliaries Control Undervoltage TDDO Relay	Control Cabinet
63KF	Sudden Pressure Relay (SPR)	Tank (3)
63KFX	SPR Seal–in Aux. Relay	Control Cabinet
63KG	Pressure–Vacuum Gauge/Swtich: High pressure contact – 63KGH; Low pressure contact – 63KGL	Tank (3)
63KN	Inert–gas (Nitrogen) System: Low cylinder pressure contact – 63KNC; Low line pressure – 63KNL; High line pressure – 63KNH	Inert–gas Control Cabinet
63KR	Pressure Relief Device (PRD)	Tank (3)
69KF; 69KB	Seal–in Aux Relay On–Off Control Switch (F: SPR switch; BF: Buchholz switch)	Control Cabinet
71KQ	Oil Level Gauge (4)	Tank (3)
71KQC	Oil Level Gauge (4)	Conservator
74KCF	Conservator Bladder Leak Relay	Control Cabinet
80/71KB	Buchholz Relay: High oil flow contacts – 80KB; Gas accumulation contact – 71KB	Tank–Conservator Oil Line
80KBX	Buchholz Seal–in Aux. Relay	Control Cabinet
80KQ	Oil (pump) Flow Switch	Cooling System

(1) Typical/common list. Refer to specifications for actual devices required.
(2) Add unit number prefix for multiple transformer installations; For single–phase transformers, add ending suffixes (e.g: '1', '2', & '3').
(3) Locations on tank as per IEEE C57 unless otherwise specified.
(4) If using both gauges, use "71KQ" & "71KQC" and trip on 71KQ low; if only using one gauge, use "71KQ", and alarm on low.

AUX. SEAL–IN RELAY TERMINALS	
Term. No.	Purpose
1	Common, Input
2	NC Input Contact
12	NO Input Contact
6,7	NO Output Alarm Contact
8,7	NC Output Alarm Contact
9,10	NO Output Trip Contact
11,12	Supply Power

OTHER TRIP CONTROL

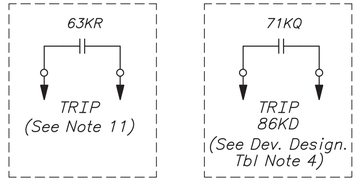

EXPLANATION

DEVICE	LOCATION	DESCRIPTION
01KF or 01KB	XFMR. CAB.	SUDDEN PRESSURE AUX. RELAY MANUAL RESET PUSHBUTTON.
86KD	CONTROL BOARD	TRANSFORMER DIFFERENTIAL LOCKOUT RELAY.
ARDB	TRANSFORMER	AUTO RECHARGE DEHYD. BREATHER

NOTES

1. Sudden Pressure Relay for non–conservator type transformers, unless otherwise specified*. Buchhlolz Relay for conservservator transformers. The schm. diag. is representative for both relays. (*May have both on consevator xfmrs, as desired.)
2. Nameplate, Type B (40–D–6234) engraved as follows:
   a. "SUDDEN PRESSURE ON–OFF CONTROL SWITCH 69KF"
   b. "BUCHHOLZ ON–OFF CONTROL SWITCH 69KB"
3. Reset Pushbutton "01" shall have a Type A nameplate in accordance with 40–D–6234 engraved as follows:
   a. "AUX RELAY 63KFX MAN. RESET"
   b. "AUX RELAY 80KBX MAN. RESET"
4. To prevent possible pickup of the aux. relay by a flashover across the relay contacts due to a voltage transient, a NC contact from the relay shall shunt the coil of the aux. relay.
5. The contact rating of the Sudden Pressure and Buchholz relays must fit the application; however, they shall always have contacts rated 0.25 amps inductive at 125 VDC, or better. Reed–type switches are acceptable, mercury–type are not acceptable.
6. Qualitrol Relay 909 or equal. Contacts rated 10 Amps at continuous at 125 VDC, minimum, unless otherwise specified. See table for typical terminals.
7. Provide auxiliary relays for output contacts as needed based on contact ratings of the supplied TECM model.
8. Oil temperatures shown are for mineral oil, revise upwards for natural ester oil based on mfr's recommendations.
9. All contacts shall be rated for 125 V DC unless otherwise specified.
10. If transformer is provided with a local monitor (TECM), wire alarms to the TECM.
11. If specifications requires trip on SPR, wire directly to 86KD or unit shutdown, as specified.

REFERENCE DRAWINGS

STANDARD NAMEPLATES 40–D–6234

REV NO		
9	2013–03–01 D – B. C. H.	ADDED TECM, DEVICE DESIGNATION LIST, AUX RELAY TERMINAL TABLE; EDITORIAL REV'S.; REVISED TITLEBLOCK. (–68430: DRC)
8	2010–11–26 D – G. K. G.	REVISED TITLE. (–68430: DRC)
7	2008–02–19 D – T. L. W.	ADDED BUCHHOLZ 'B' DESIGNATION TO DEVICES, REVISED NOTES. (–68430: DRC)
6	2005–11–15 D – T. L. W.	REVISED TITLE BLOCK, OTHER MINOR REVISIONS. (D–8440: DRC)
	8–4–00 D– T.L.W.	CHANGED 53KFX TO 63 KFX IN EXPLANATION.
	8–30–99 D– T.L.W.	ADDED CONTACT 63KBFX AND REVISED NOTES 2, 4, 5, 6 AND 7
	8–26–96 D– T.L.W.	Added notes 6 AND 7.
	6–14–95 D– T. L. W.	Revised drawing to reflect differences in sudden pressure and Bucholz relays, revised device list, redrawn in autocad format.

ALWAYS THINK SAFETY

UNITED STATES
DEPARTMENT OF THE INTERIOR
BUREAU OF RECLAMATION

STANDARD DESIGNS

POWER TRANSFORMER

ELECTRICAL INSTALLATION

PROTECTIVE DEVICES
SCHEMATIC DIAGRAM & DESIGNATIONS

DESIGNED J.W.R. TECHNICAL APPROVAL J.V. BAPTIST
DRAWN L.L.M. SUBMITTED H. A. ARTHUR
CHECKED C.F.M. –H.H.V. APPROVED B. P. BELLPORT
CHIEF, ELECTRICAL BRANCH

DENVER, COLORADO MARCH 10, 1967
SHEET 1 OF 1

40–D–6119

CAD SYSTEM AutoCAD Rel. 19.0s
CAD FILENAME 40-D-6119_REV09.DWG
CAD FILE 40-D-6119
DATE AND TIME PLOTTED MARCH 1, 2013 15:39
PLOTTED BY DCRAWFORD

SAMPLE NAMEPLATES

STRAINER DRAIN

EXTENDED TYPE

STRAINER
DRAIN

COMPACT TYPE

FIRE PROTECTION
WATER SUPPLY
CAUTION
2 1/2" OUTLET FOR FIRE
DEPARTMENT USE ONLY

INSCRIPTION AND CLOSE RANGE
INFORMATIONAL LETTERING

GOTHIC LETTERING CHART

1/4" NORMAL (Avg. width .271")
ABCDEFGHIJKLMN
ABCDEFGHIJKLMNOP
CONDENSED (Avg. width .234")

3/16" NORMAL (Avg. width .203")
ABCDEFGHIJKLMNOPQR
ABCDEFGHIJKLMNOPQRSTU
CONDENSED (Avg. width .175")

5/32" NORMAL (Avg. width .163")
ABCDEFGHIJKLMNOPQRSTUV
ABCDEFGHIJKLMNOPQRSTUVWXYZ
CONDENSED (Avg. width .140")

1/8" NORMAL (Avg. width .135")
ABCDEFGHIJKLMNOPQRSTUVWXYZ
ABCDEFGHIJKLMNOPQRSTUVWXYZ
CONDENSED (Avg. width .116")

3/32" NORMAL (Avg. width .103")
ABCDEFGHIJKLMNOPQRSTUVWXYZ
ABCDEFGHIJKLMNOPQRSTUVWXYZ
CONDENSED (Avg. width .086")

*Average widths listed include spacing between letters.

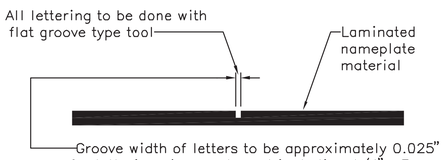

LETTERING DETAIL

SIZES AND LETTER SPACING OF NAMEPLATES

FOR DIMENSIONS SEE TABLES 1 & 2

TABLE 1
WIDTH
TABLE FOR ALL LETTERING THE SAME SIZE

GOTHIC LETTER SIZE	NO. OF LINES 1 W	1 B	2 W	2 S	2 B	3 W	3 S	3 B
1/4	1.00	.375	1.25	.15	.30	1.75	.15	.35
3/16	.75	.28	1.00	.11	.26	1.25	.11	.23
5/32	.50	.17	.75	.08	.18	1.00	.09	.18
1/8	.50	.19	.75	.08	.21	1.00	.08	.23
3/32	.50	.20	.50	.07	.12	.75	.08	.15

Dim. in inches

For other lettering sizes, more than three lines, or various size lettering on same nameplate, arrange width as follows:
Space(S)=Average of letter sizes on each side of space x 0.6.
Border(B)=Largest lettering size on name-plate x 1.2 + half of odd amounts to give total width(W) to even 1/4".

TABLE 3
STANDARD NAMEPLATES
FOR ELECTRICAL EQUIPMENT ONLY

NAMEPLATE SIZE NO.	NAMEPLATE DIMENSIONS L	W	B	LETTERING SIZE
1	1 1/8	7/16	1/16	3/32
2	1 1/2	9/16	1/8	3/32
3	1 3/4	5/8	1/8	1/8
4	2 1/4	3/4	1/8	3/16
5	3	1	7/32	3/16
6	4	1 1/4	1/4	1/4
7	6	1 3/4	1/4	1/2

Above nameplates shall be used for electrical equipment unless otherwise specified.

Dim. in inches

TABLE 2
LENGTH

NO. OF LETTERS AND SPACES	LETTERING SIZE ON LONGEST LINE (NORM=NORMAL; COND=CONDENSED) 1/4 NORM	1/4 COND	3/16 NORM	3/16 COND	5/32 NORM	5/32 COND	1/8 NORM	1/8 COND	3/32 NORM	3/32 COND
1										
2										
3	3	3	3	3	3	3	3	3	3	3
4										
5										
6										
7	3 1/2									
8		3 1/2								
9	4		3 1/2							
10		4		3 1/2						
11	4 1/2				3 1/2					
12	5	4 1/2	4	3 1/2		3 1/2				
13										
14	5 1/2	5	4 1/2	4		4	3 1/2	3 1/2		
15										
16	6									
17		5 1/2	5	4 1/2						
18	6 1/2				4 1/2	4				
19		6	5 1/2	5			4	3 1/2		
20	7				5					
21		6 1/2				4 1/2				
22	7 1/2		6	5 1/2			4 1/2	4		
23		7			5					
24	8			6		5	5		3 1/2	
25	8 1/2	7 1/2	6 1/2	6	5 1/2	5	5	4 1/2	4	3 1/2
26										

Dim. in inches

For other lettering sizes or longer nameplates, use the following formula:
L = A(N+n) + 2M (Nameplate length cut to nearest 1/2").
L – Length of nameplate.
A – Average letter width on longest line.
N – Number of letters on longest line.
n – Number of spaces on longest line
M – Margin=Average letter width plus 5/8".

MOUNTING OF NAMEPLATES

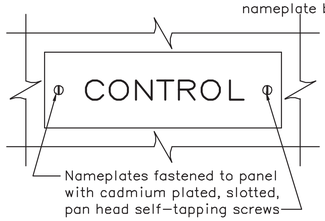

TYPICAL MOUNTING ON PANEL

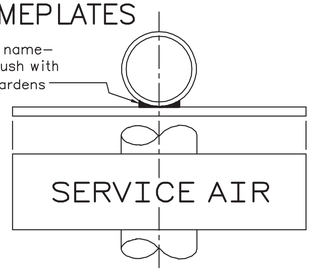

TYPICAL MOUNTING ON VERTICAL PIPE

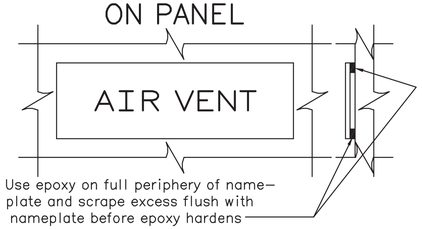

TYPICAL MOUNTING ON CONCRETE WALL

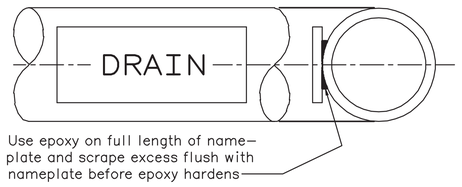

TYPICAL MOUNTING ON HORIZONTAL PIPE

DRILLING OF NAMEPLATES
(For panel mounting only)

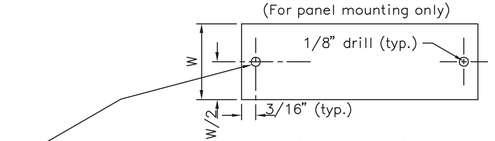

FOR WIDTHS UP TO 1 3/4"

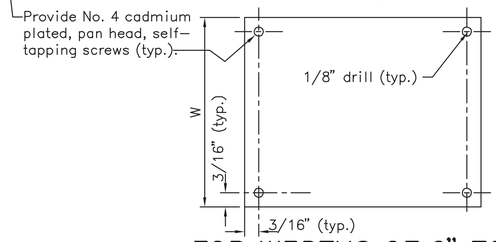

FOR WIDTHS OF 2" TO 3"

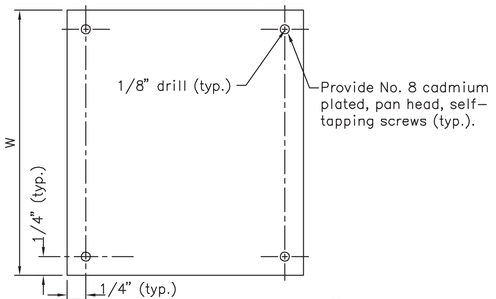

FOR WIDTHS OVER 3"

NAMEPLATE MATERIAL

NOTE – All nameplate material shall be suitable for exposure to direct sunlight without detrimental fading.
TYPE A – Material shall be laminated phenolic resin sheets 1/16" or 3/32" thick (as specified) opaque black surface, white layer adjacent to surface layer, buffed or satin finish. Sheets to be cut to size with square edges. Engraving to cut through black surface to white layer. Shall conform to Military Specification MIL – P – 78A and Federal Specification L–P–509a.
TYPE B – Same as Type A except Chinese red surface or equivalent.
TYPE C – Same as Type A except 1/8", 3/16", or 1/4" thick (as specified).
TYPE D – Same as Type A except Chinese red surface or equivalent and 1/8", 3/16", or 1/4" thick (as specified).

NAMEPLATE USES

TYPE A – For panel mounting with self-tapping screws. For concrete wall or other flat mounting to identify valves, equipment, etc. Mount with epoxy cement-indoors or outdoors.
TYPE B – Red nameplates are restricted to uses such as fire protection equipment, warning inscriptions, and emergency devices. Methods of mounting shall be the same as for Type A.
TYPE C – For mounting on non-flat surface with epoxy cement.
TYPE D – Restricted to uses such as fire protection, equipment warning inscriptions, and emergency devices. For mounting on non-flat surfaces with epoxy cement.

LETTERING

Use normal or condensed letter types shown on the Gothic Lettering Chart. The normal size of lettering shall be not less than 3/16" high (1/4" preferred), except that 5/32" and smaller may be used for information and instructions that may be read at close range. Larger size lettering may be specified for out-of-doors installations or where necessary.

NOTES

This drawing supersedes Drawings No. 40–D–5173, 106–D–341, and 106–D–342.
This drawing and Drawings No. 40–D–6124, –6130, and –6187 supersede Drawing No. 40–D–2567.
Table 3 for ELECTRICAL EQUIPMENT ONLY, Tables 1 and 2 for all other equipment.

10 – 13 – 00 D – L.G.	Redrawn in AutoCAD
12 – 11 – 79 D – L.H.	Redrawn
11 – 6 – 70 D – D.A.W.	Add Table 3 and Note

ALWAYS THINK SAFETY

UNITED STATES
DEPARTMENT OF THE INTERIOR
BUREAU OF RECLAMATION

STANDARD DESIGNS

STANDARD NAMEPLATES

DESIGNED D.A.W. TECHNICAL APPROVAL C.G.Bates
DRAWN J.M.F. SUBMITTED Jack W. Hilf
CHECKED D.M.B.–S.Y.K.–F.M.J. APPROVED B.P.Bellport
CHIEF ENGINEER

CADD SYSTEM	CADD FILENAME	DATE AND TIME PLOTTED
AutoCAD Release 12_c2-a	4006324.DWG	NOVEMBER 29, 1994 12:28
DENVER, COLORADO	MAY 1970	40–D–6234

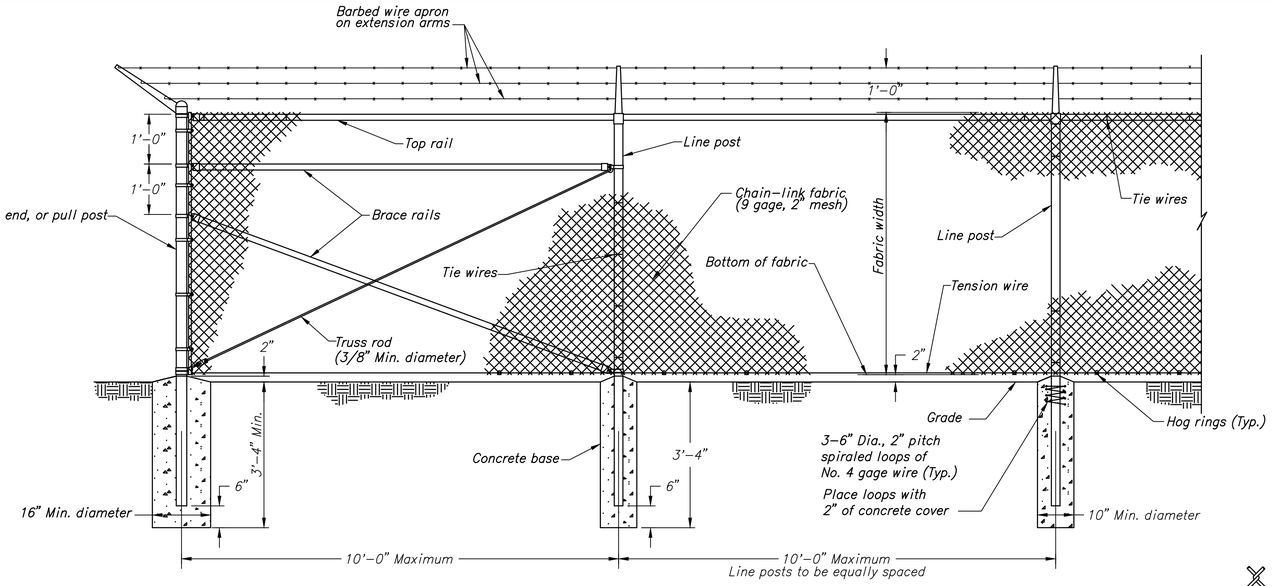

CHAIN-LINK SECURITY FENCE DETAIL

Not to scale

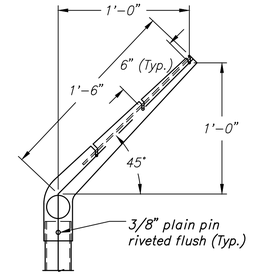

LINE POST

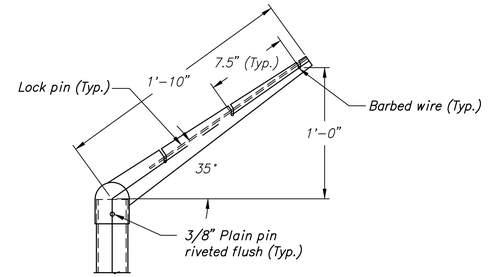

CORNER POST

EXTENSION ARM DETAILS

Not to scale

STEEL POST SCHEDULE			
Use and Section	Minimum Outside Dimensions (Nominal)		
	Fabric Less Than 72"	Fabric 72" to 96"	Fabric Over 96"
Corner, End & Pull Posts			
Tubular – Round	2.375" O.D.	2.875" O.D.	4.00" O.D.
Tubular – Square	2.00" Sq.	2.50" Sq.	3.00" Sq.
C-Section (Roll-Formed)	3.50" x 3.50"	3.50" x 3.50"	–
Line Posts			
Tubular – Round	1.90" O.D.	2.375" O.D.	2.875" O.D.
H-Section	2.25" x 1.70"	2.25" x 1.70"	2.25" x 1.70"
C-Section (Roll-Formed)	1.875" x 1.625"	2.25" x 1.70"	–
Top, Bottom & Brace Rails			
Tubular – Round	1.66" O.D.		
Tubular – Square	1.50" O.D.		
H-Section	1.625" x 1.50"		
C-Section (Roll-Formed)	1.625" x 1.25"		

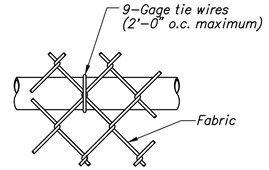

TOP OR BRACE RAIL ATTACHMENT

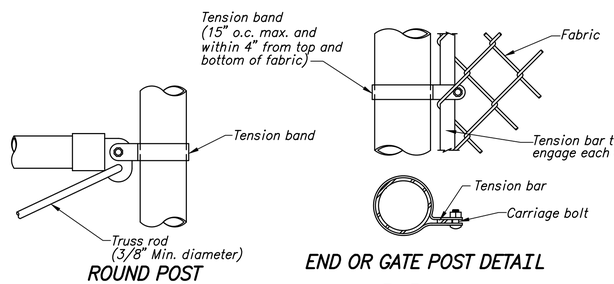

ROUND POST

END OR GATE POST DETAIL

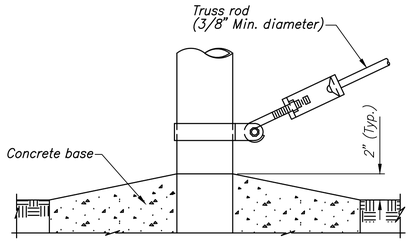

TRUSS RAIL CLAMP DETAILS

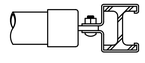

H-BEAM

BRACE RAIL CLAMP DETAILS

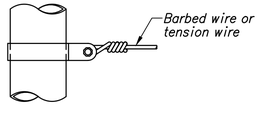

TENSION BAND DETAIL

FASTENING DETAILS

Not to scale

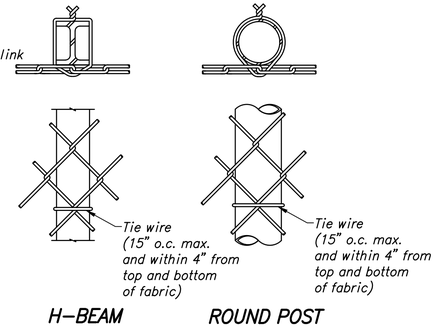

H-BEAM ROUND POST

LINE POST ATTACHMENTS

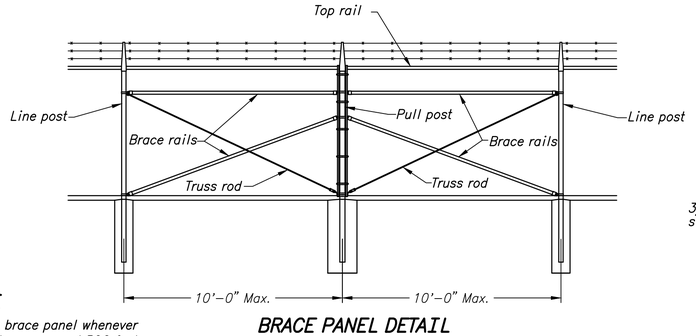

NOTE

Provide brace panel whenever straight runs exceed 500 feet

BRACE PANEL DETAIL

Not to scale

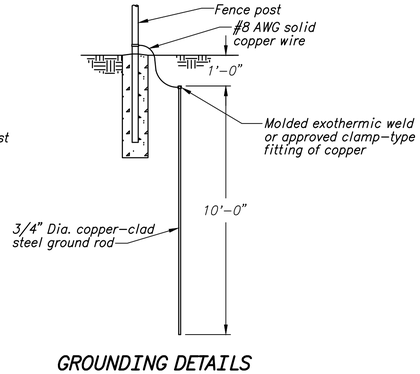

GROUNDING DETAILS

(Where specified)

Not to scale

NOTES

1. Details shown are to clarify requirements and are not intended to limit other types of fence sections and methods of installation.
2. Wire ties, rails, posts, and braces shall be constructed on the secure side of the fence alignment. Chain-link fabric shall be placed on the opposite side of the secure area.
3. Unless specifically shown or specified, all fence shall have apron extended outward from the area being protected.
4. C-section posts shall be installed so that the void inside the post is completely filled with concrete up to the top of the foundation.
5. See standard drawing 40-600-60 for chain link security fence gate details.

This drawing (FE6 Chain Link Security fence Details, Code STD 872-90-03 dated May 1992) was originally obtained from the US Army Engineer, District Corps of Engineers, Omaha, Nebraska.

REV NO	05/20/2002	ADDED SPIRALED LOOPS OF NO. 4 GAGE WIRE TO GATE OST
1	600- GAG, P.E.	

ALWAYS THINK SAFETY

UNITED STATES
DEPARTMENT OF THE INTERIOR
BUREAU OF RECLAMATION
Great Plains Region
Standard Design

CHAIN-LINK SECURITY FENCE

STANDARD

DETAILS

DESIGNED D. WICKENBERG	TECH. APPROVAL D. WICKENBERG
DRAWN ENGINEERING SUPPORT	SUBMITTED
CHECKED L.K. LALUM	APPROVED L.D. ARMER

CADD SYSTEM	CADD FILENAME	DATE AND TIME PLOTTED
AutoCAD	0000087K.dwg	05-20-2002
BILLINGS, MONTANA	MAY 20, 2002	
SHEET 1 OF 1		40-600-59

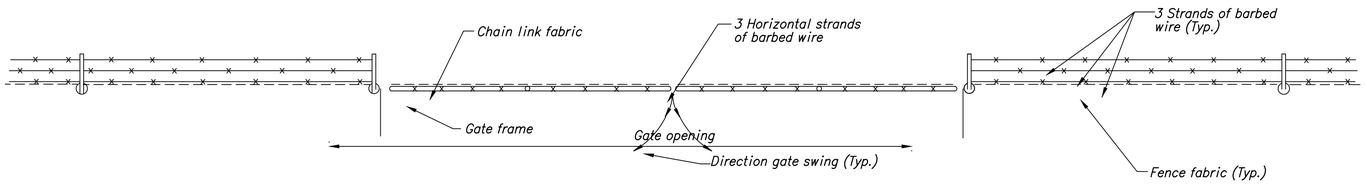

PLAN

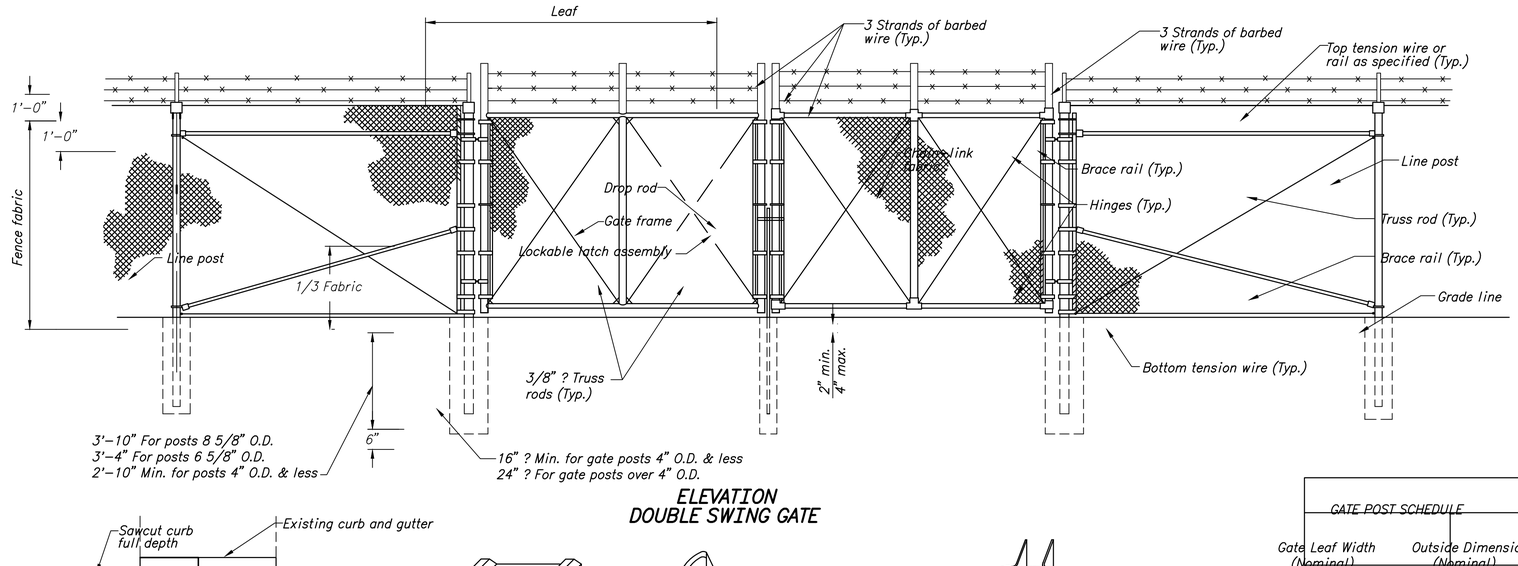

ELEVATION
DOUBLE SWING GATE

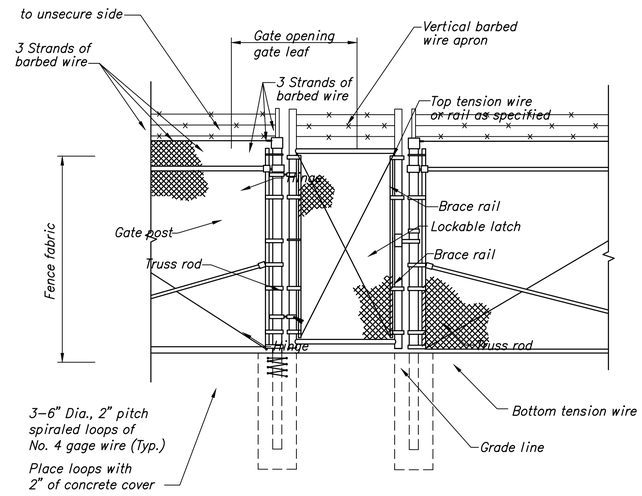

PERSONNEL GATE

NOTES

1. Details shown are to clarify requirements and are not intended to limit other type of fence sections and methods of installation.
2. Swing gates shall be constructed with drop rods, padlocks, latch assembly and gate keepers except as noted.
3. All gate frames shall be a minimum 1.90" nominal (round) or 2.00" nominal (square). Gate frames shall be of welded construction or shall be assembled using heavy fittings. At Contractor's option a welded horizontal brace may be used in lieu of truss rods to brace all welded gate frames. The Contractor shall be responsible for the proper rigid construction of all gates supplied.
4. Latches, stops, and keepers to be provided for all gates. Unless specified differently, lockable latches for gates 10ft. wide or over shall be of the drop rod type and to the full gate height.
5. See standard drawing 40–600–59 for chain link security fence details.

PLAN

OFFSET HINGE

STANDARD HINGE

GATE POST SCHEDULE	
Gate Leaf Width (Nominal)	Outside Dimension (Nominal)
6' or less	2.875" OD 2.5" Sq.
More than 6' to 13'	4.0" OD
More than 13' to 18'	6.625" OD
More than 18'	8.625" OD

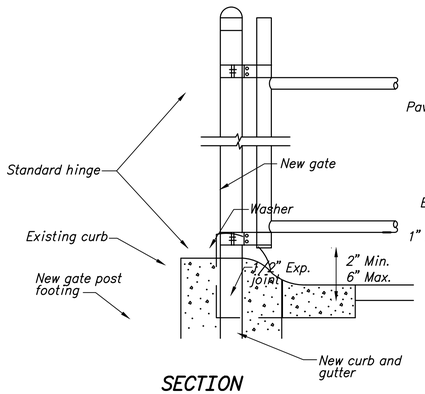

SECTION
GATE POST DETAIL
AT CURB AND GUTTER
Not to scale

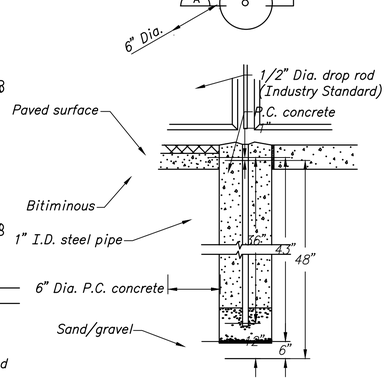

DROP ROD FOUNDATION

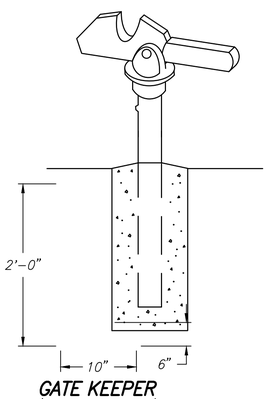

GATE KEEPER
(To hold gate open)

SWING GATE DETAILS
Not to scale

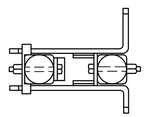

LATCH ASSEMBLY

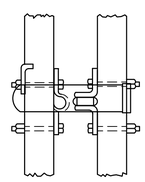

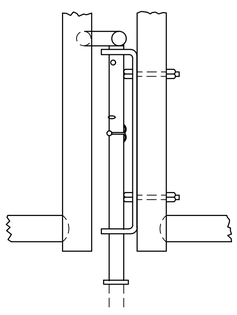

DROP ROD ASSEMBLY

This drawing (FE6 Chain Link Security Fence Details, Code STD 872–90–08 dated May 1992) was originally obtained from the US Army Engineer, District Corps of Engineers, Omaha, Nebraska.

REV NO		
2	05/20/2002 600– GAG, P.E.	ADDED SPIRALED LOOPS OF NO. 4 GAGE WIRE TO GATE POST
1	08/13/2001 600– LKL	MINOR REVISIONS

ALWAYS THINK SAFETY

UNITED STATES
DEPARTMENT OF THE INTERIOR
BUREAU OF RECLAMATION
GREAT PLAINS REGION
STANDARD DESIGN

CHAIN LINK SECURITY FENCE
STANDARD
GATE DETAILS

DESIGNED D. WICKENBERG TECH. APPROVAL D. WICKENBERG
DRAWN ENGINEERING SUPPORT SUBMITTED
CHECKED L.K. LALLUM APPROVED L.D. ARMER

CADD SYSTEM	CADD FILENAME	DATE AND TIME PLOTTED
AutoCAD 2000i	000006XP.dwg	04–27–2000 07:20
BILLINGS, MONTANA	MAY 20, 2002	40–600–60
SHEET 1 OF 1		

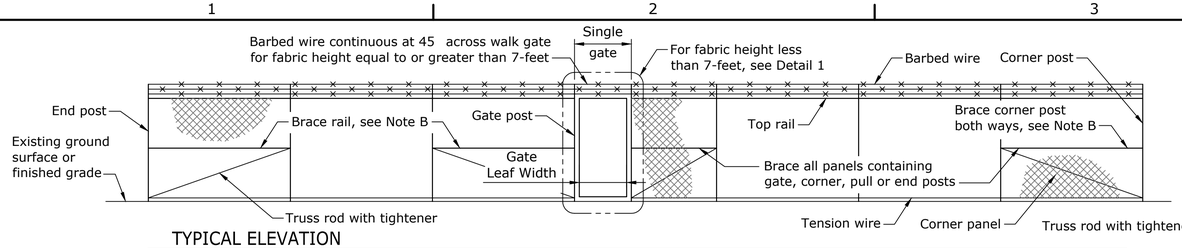

TYPICAL ELEVATION

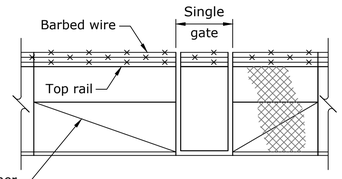

DETAIL 1

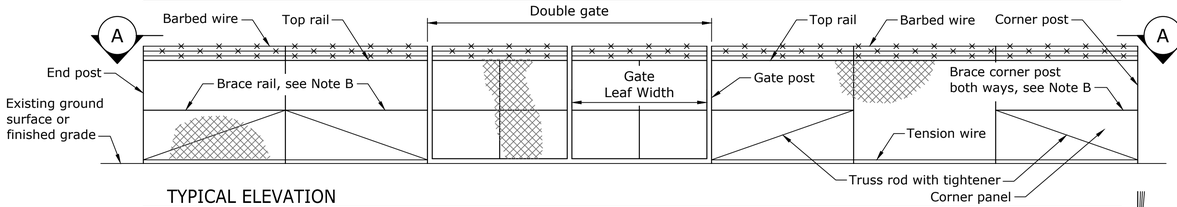

TYPICAL ELEVATION

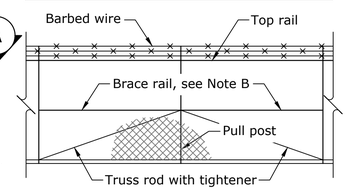

PANELS ADJOINING PULL POST

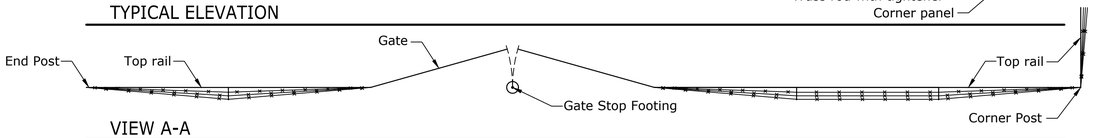

VIEW A-A

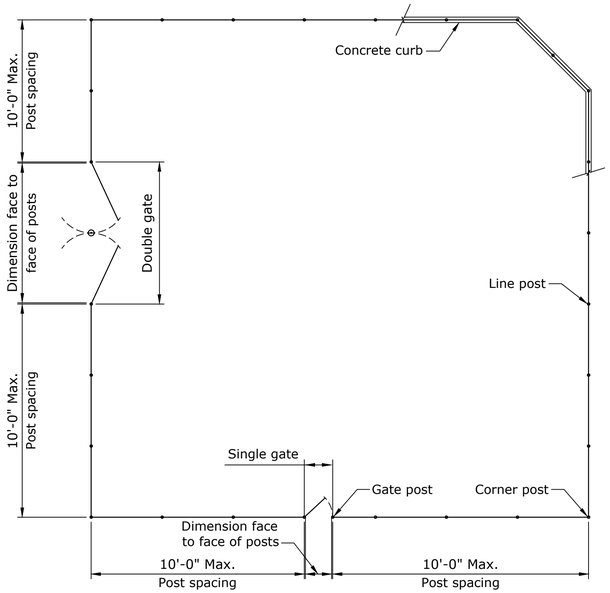

TYPICAL FENCING PLAN

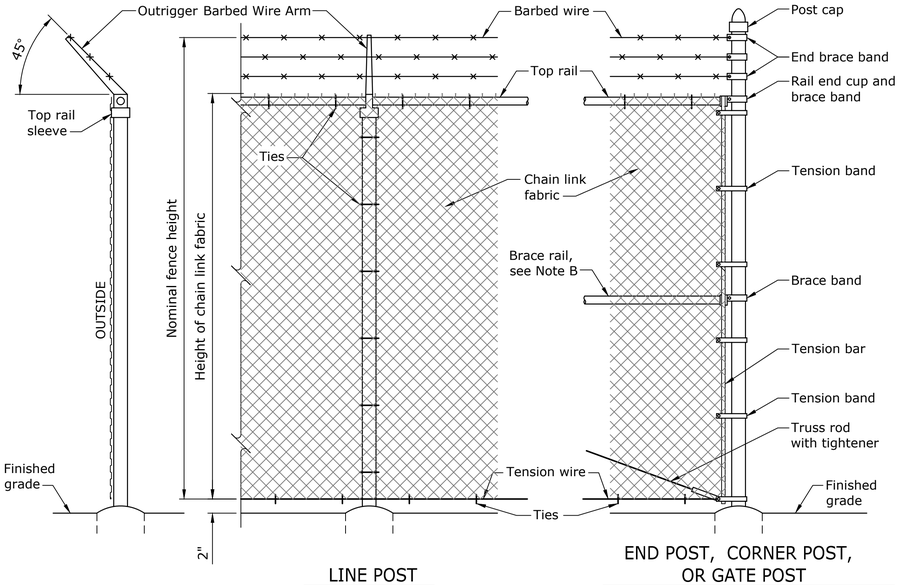

LINE POST

END POST, CORNER POST, OR GATE POST

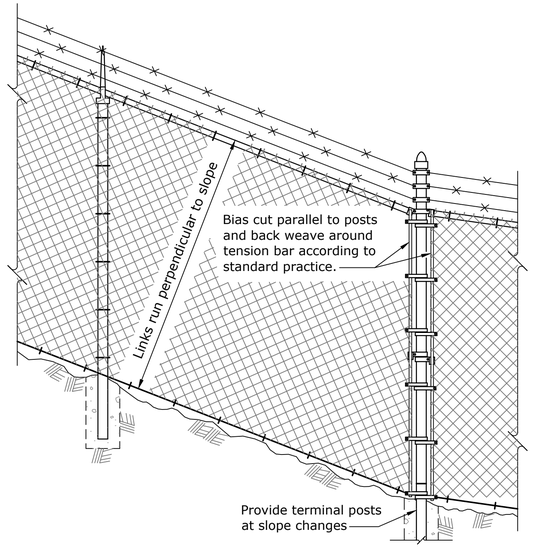

FENCE INSTALLATION ON STEEP SLOPES

POST FOOTING SIZES IN SOIL OR LOOSE ROCK				
POST	FABRIC HEIGHT OR GATE LEAF WIDTH	HOLE DIAMETER	HOLE DEPTH	POST EMBEDMENT
Line	3 ft. to 4 ft.	6 inches	24 inches	22 inches
Line	5 ft.	8 inches	30 inches	28 inches
Line	6 ft. to 12 ft.	9 inches	38 inches	36 inches
Terminal	3 ft. to 5 ft.	10 inches	32 inches	30 inches
Terminal	6 ft. to 12 ft.	12 inches	38 inches	36 inches
Gate	6 ft.	12 inches	38 inches	36 inches
Gate	6 ft. to 13 ft.	16 inches	44 inches	42 inches
Gate	13 ft.	26 inches	50 inches	48 inches

Condition A: Depth required for footing in solid rock with overburden of soil or loose rock.
Condition B: Depth required for embedment in rock, see Solid Rock Detail.
Note A: Satisfy the minimum requirements for Condition A or Condition B.
Note B: Brace rails and truss rods are not required for fabric height of 6 feet or less.

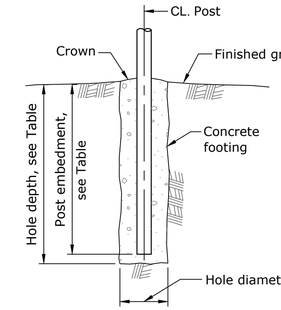

SOIL OR LOOSE ROCK

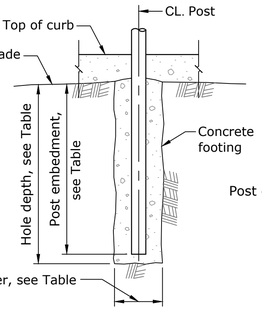

POST FOOTING UNDER CURB

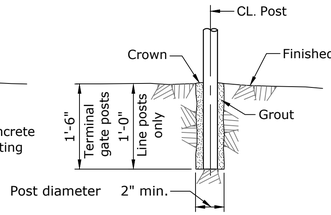

SOLID ROCK

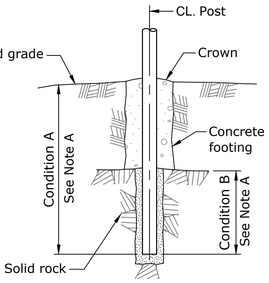

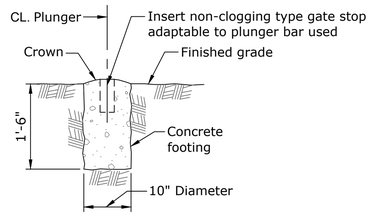

GATE STOP FOOTING

POST FOOTING IN SOLID ROCK WITH OVERBURDEN OF SOIL OR LOOSE ROCK

NOTES

1. See specific site plan for overall fence dimensions and size, location, and swing of gates.
2. Install pull posts at the end of each run, at maximum intervals of 500 feet, and at vertical and horizontal changes in alignment greater than 30 degrees.
3. Weld all joints between tubular gate frame members or use heavy fittings to provide rigid and watertight connections.
4. Gate dimensions are face to face of gate posts.
5. Provide latches, stops and keepers for all gates as specified.
6. End post, corner posts, and pull posts, are designated as terminal posts.
7. See site plans for curb details and locations where curb is required.
8. Chain link fabric shall be attached to fence framework in accordance with the Chain Link Fence Manufacturer's Institute (CLFMI) Product Manual.
9. Chain link fences are 6 foot high fabric unless otherwise noted on specific site plans.

BUREAU OF RECLAMATION

ALWAYS THINK SAFETY

U.S. DEPARTMENT OF THE INTERIOR
BUREAU OF RECLAMATION
STANDARD DRAWINGS

STANDARD AND TYPICAL DESIGNS

CHAIN LINK FENCING

REV NO	DATE	DESCRIPTION OF CHANGE
D	2023-04-13 Ryan, Tyler J P.E.	UPDATED DRAWING TE 1 STYLE, BORDER AND TITLE BLOCK CHANGES TO MEET DRAWING RECORDS SYSTEM, NUMBERED NOTES AND PAGE MINOR REVISIONS.
1		

G.E. SHERARD DESIGNED
D.L. BORING DRAWN
T.C. GRABER CHECKED
T.C. GRABER TECH. APPR.
M.R. O'SHEA APPROVED
PEER REVIEWER - Structural and Architectural Group
DENVER, CO 1999-04-30

CHAIN LINK FENCING REQUIREMENTS SOIL INSTALLATION

PLAN, ELEVATIONS, AND DETAILS

40-D-7016

SHEET 1 OF 1

Released

LAST SAVED DATE
2023-04-13
LAST SAVED BY
TRYAN

CAD SYSTEM
AutoCAD 2018 LDS (LMS TECH)
CAD FILENAME
40-D-7016-RD-1.DWG

Released

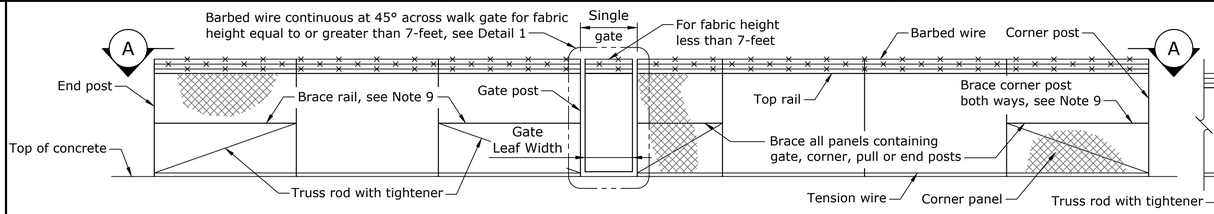

TYPICAL ELEVATION

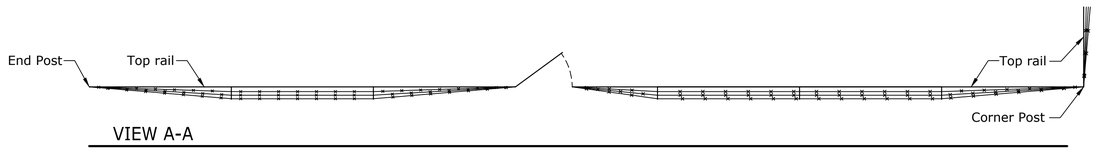

VIEW A-A

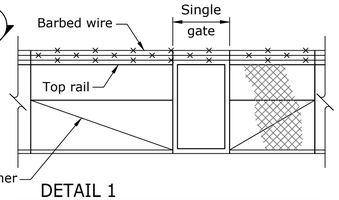

DETAIL 1

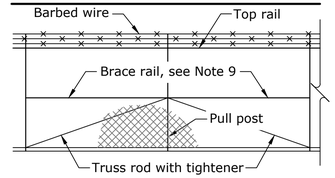

PANELS ADJOINING PULL POST

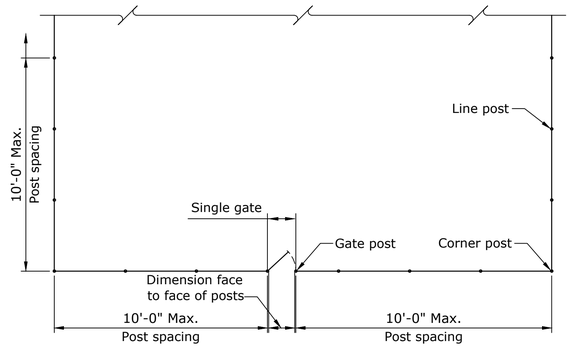

TYPICAL FENCING PLAN

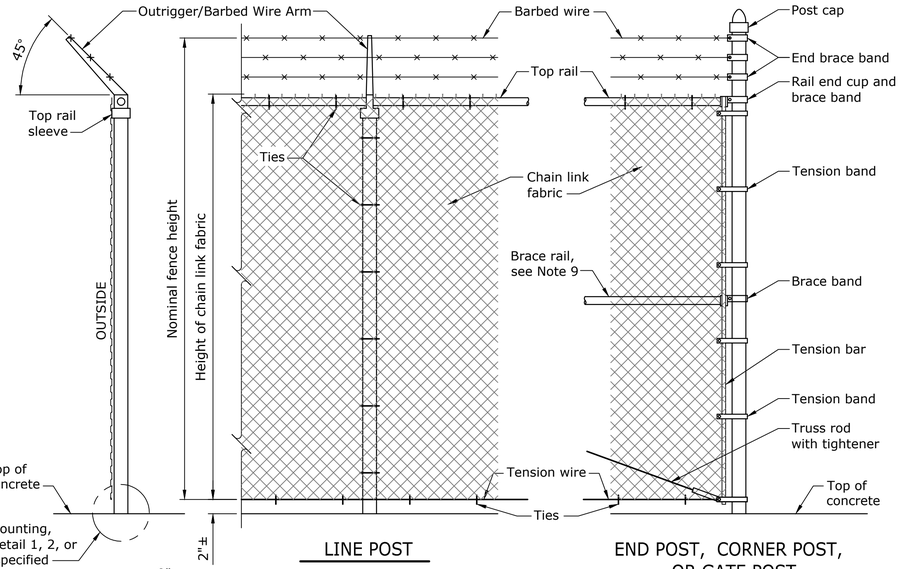

LINE POST

END POST, CORNER POST, OR GATE POST

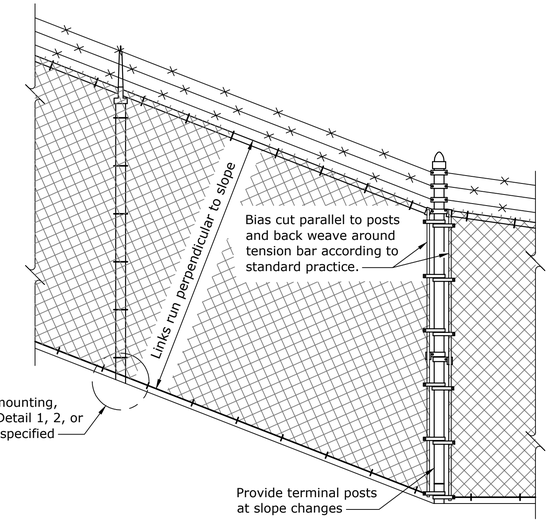

FENCE INSTALLATION ON STEEP SLOPES

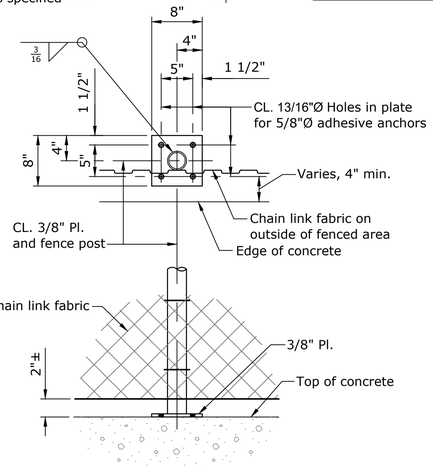

1 DETAIL - SURFACE MOUNTED POST

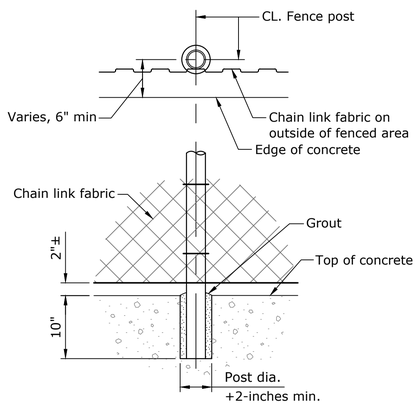

2 DETAIL - EMBEDDED POST

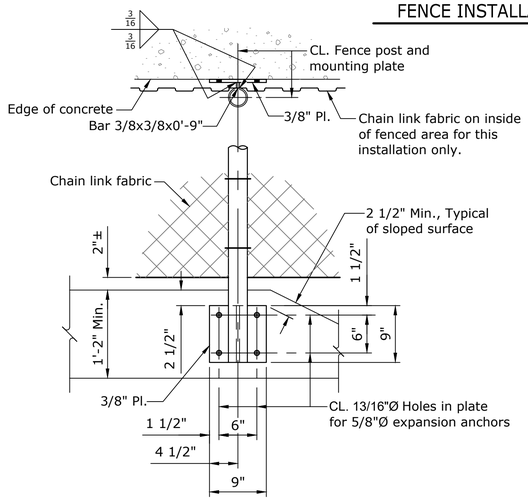

3 DETAIL - SIDE MOUNTED POST
(For slabs 1'-2" thick or greater or wall surfaces)

NOTES

1. See specific site plan for overall fence dimensions and size, location and swing of gates.
2. Install pull posts at the end of each run, at maximum intervals of 500 feet, and at vertical and horizontal changes in alignment greater than 30 degrees.
3. Weld all joints between tubular gate frame members or use heavy fittings to provide rigid and watertight connections.
4. Gate dimensions are face to face of gate posts.
5. Provide latches, stops and keepers for all gates as specified.
6. End post, corner posts, pull posts, and gate posts are designated as terminal posts.
7. Chain link fabric shall be attached to fence framework in accordance with the Chain Link Fence Manufacturer's Institute (CLFMI) Product Manual.
8. Chain link fences are 6 foot high fabric unless otherwise noted on specific site plans.
9. Brace rails and truss rods are not required for fabric height of 6 feet or less.

BUREAU OF RECLAMATION

ALWAYS THINK SAFETY

U.S. DEPARTMENT OF THE INTERIOR
BUREAU OF RECLAMATION
STANDARD DRAWINGS

STANDARD AND TYPICAL DESIGNS

CHAIN LINK FENCING

REV NO	DATE	BY	DESCRIPTION
1.1	2023-04-12	Ryan, Tyler J P.E.	UPDATED DRAWING TEXT STYLE, BORDER AND TITLE BLOCK TO CURRENT STANDARDS. ADDED ITEM NUMBERS TO NOTES AND MADE MINOR REVISIONS.
D			

G.E. SHERARD	DESIGNED
D.L. BORING	DRAWN
T.C. GRABER	CHECKED
T.C. GRABER	TECH. APPR.
M.R. O'SHEA	APPROVED
PEER REVIEWER - Structural and Architectural Group	
DENVER, CO	1999-04-30

CHAIN LINK FENCING REQUIREMENTS CONCRETE INSTALLATION

PLAN, ELEVATIONS, AND DETAILS

40-D-7017

SHEET 1 OF 1

LAST SAVED DATE
2023-04-12
LAST SAVED BY
RRODRIGUEZ

CAD SYSTEM
AutoCAD 2018 (LMS TECH)
CAD FILENAME
40-D-7017-RD-1.DWG

FIGURE 1

DIMENSIONS (INCHES) MALLEABLE IRON ONE-HOLE CLAMP

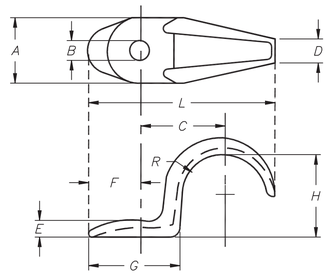

FOR RIGID CONDUIT										
SIZE	A	B	C	D	E	F	G	H	L	R
1/2	21/32	19/64	1 1/16	5/16	7/32	19/32	1 5/16	51/64	2 7/32	27/64
3/4	7/8	5/16	1 5/32	3/8	1/4	3/4	1 3/8	1 1/64	2 19/32	17/32
1	1 1/16	5/16	1 11/32	7/16	5/16	29/32	1 17/32	1 9/32	3 1/8	43/64
1 1/4	1 5/16	13/32	1 11/16	1/2	5/16	1 3/32	1 7/8	1 5/8	3 13/16	27/32
1 1/2	1 5/16	13/32	2	1/2	11/32	1 3/32	2	1 27/32	4 5/16	63/64
2	1 7/16	27/64	2 5/8	5/8	7/16	1 5/8	2 3/8	2 9/32	5 1/4	1 15/64
2 1/2	1 1/16	9/16	3	3/4	9/16	1 1/4	2 13/16	2 13/16	6	1 15/32
3	1 3/4	9/16	3 5/16	7/8	21/32	1 3/8	2 29/32	3 7/16	6 13/16	1 25/32
3 1/2	2	11/16	3 5/8	1	3/4	1 3/4	3 1/16	3 7/8	7 3/4	2 3/32
4	2 1/4	11/16	4 1/2	1 1/4	3/4	2	4 3/32	4 3/8	9 3/16	2 9/32

FOR ELECTRICAL METALLIC TUBING										
SIZE	A	B	C	D	E	F	G	H	L	R
1/2	21/32	1/4	53/64	3/8	5/32	25/64	1	21/32	1 13/32	23/64
3/4	21/32	1/4	1 1/32	3/8	7/32	1/2	1 1/16	29/32	2 1/8	15/32
1	25/32	9/32	1 1/8	3/8	1/4	3/4	1 3/32	1 5/32	2 19/32	19/32
1 1/4	25/32	9/64	1 23/64	3/8	1/4	3/4	1 9/32	1 1/2	3	49/64
1 1/2	7/8	5/16	1 17/32	3/8	1/4	3/4	1 5/16	1 47/64	3 5/16	57/64
2	1	27/64	1 27/32	3/8	5/16	3/4	1 7/16	2 5/32	3 7/8	1 7/64

SUPERSEDES 104-D-262

FIGURE 2

SUPPORTING CONDUIT TO STEEL H BEAM (EXPOSED)

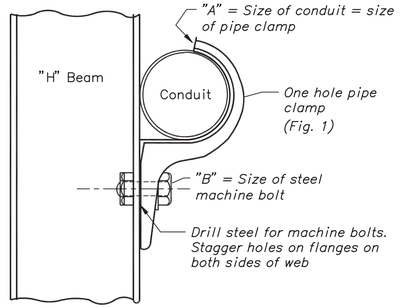

A	B
1/2"	No.12 x 1"
3/4"	1/4" x 1"
1"	1/4" x 1"
1 1/4"	5/16 x 1"
1 1/2"	3/8 x 1"
2"	1/2 x 1 1/2"
2 1/2"	1/2 x 1 1/2"
3"	1/2 x 1 1/2"
3 1/2"	5/8 x 1 1/2"
4"	5/8 x 1 1/2"

SUPERSEDES 104-D-270

FIGURE 3

SUPPORTING CONDUIT ON CONCRETE SURFACE WITH STANDARD ONE-HOLE M.I. PIPE CLAMP

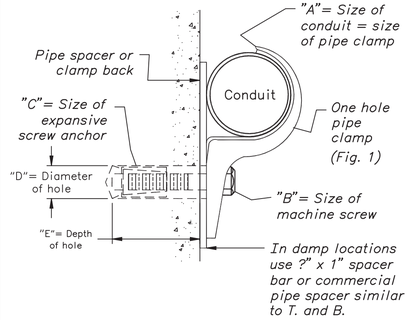

A	B	C *	D	E
1/2"	#12x3/4"	#12x24	1/2"	7/8"
3/4"	1/4"x1 3/4"	1/4"x20	1/2"	1 1/2"
1"	1/4"x1 3/4"	1/4"x20	1/2"	1 1/2"
1 1/4"	5/16"x2"	5/16"x18	5/8"	1 3/4"
1 1/2"	3/8"x2 1/4"	3/8"x16	3/4"	2"
2"-2 1/2"-3"	1/2"x2 1/4"	1/2"x13	7/8"	2 1/4"
3 1/2"-4"	5/8"x3"	5/8"x11	1 1/8"	2 3/4"

NOTE:

All conduits not otherwise supported shall be held in place by clamps shown above, located at approx. 10 foot intervals.

* The expansion screw anchor shall be of corrosion resistant material

SUPERSEDES 104-D-283

FIGURE 4

HIGH VOLTAGE CABLE CONDUIT RISER SUPPORT DETAILS

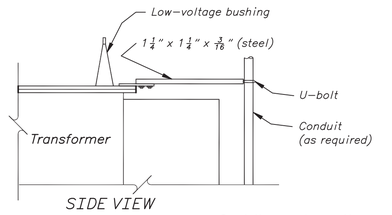

SIDE VIEW

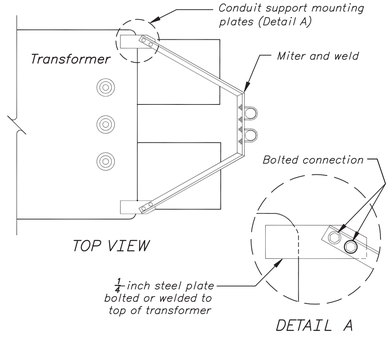

TOP VIEW

DETAIL A

SUPERSEDES 104-D-806

FIGURE 5

MOUNTING CONDUIT TO TUBULAR STEEL STRUCTURE

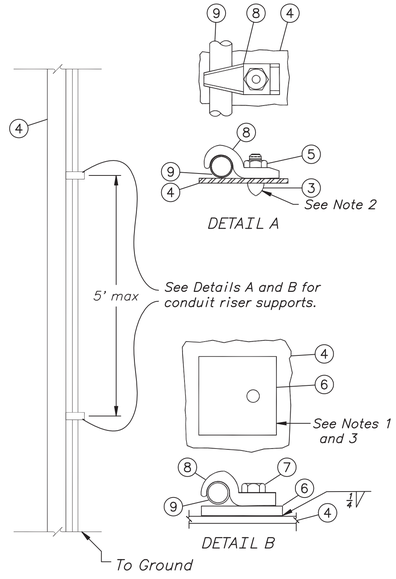

ITEM	DESCRIPTION
1	
2	
3	Power driven threaded stud (3/8" Dia.)
4	Tubular steel structure
5	Self-Locking hex nut (For item 3)
6	Steel plate (1 inch thick)
7	3/8" Dia. U.S. standard bolt (Length as Required)
8	Malleable iron pipe strap (Steel City Type HS)
9	Rigid metallic conduit

NOTES

1. For Detail B the 1" steel plate shall have an area larger than the projected area of the connecting clamp.
2. The 3/8" stud shall be driven into the tubular steel structure with a powder actuated fastening tool equal to Ramset Fastening System, as manufactured by Illinois Tool Works, Wood Dale, IL.
3. The 1" thick steel plate shall be welded to the tubular steel structure and have a 3/4" deep hole drilled and tapped for a 3/8" U.S. standard bolt.

SUPERSEDES 40-D-6309 IN PART

THIS DRAWING SUPERSEDES DRAWINGS AS NOTED IN FIGURES, 2004-09-30.

ALWAYS THINK SAFETY

UNITED STATES
DEPARTMENT OF THE INTERIOR
BUREAU OF RECLAMATION

STANDARD DESIGNS

ELECTRICAL INSTALLATION

CONDUIT CLAMP AND CONDUIT SUPPORTS TYPICAL DETAILS

DESIGNED S. J. RONDA CHECKED D. CRAWFORD

DRAWN S. J. RONDA TECH. APPR. L. GAMUCIELLO, P.E.

APPROVED J. R. ZEIGER, P.E.
MANAGER, ELECTRICAL SYSTEMS GROUP

DENVER, COLORADO 2004-09-30
SHEET 1 OF 1

40-D-7094

CAD SYSTEM
AutoCAD Rel. 16.0s (LMS Tech)
CAD FILENAME
40-D-7094.DWG
DATE AND TIME PLOTTED
JANUARY 13, 2005 08:54
PLOTTED BY
ROJNBAR

REFERENCE MATERIALS	
DESCRIPTION	ITEM NO.
High-voltage bushing	1
Low-voltage bushing	2
Neutral bushing	3
Anchor bolt hole	4
Top protective cover, removable (Notes 2 and 3)	5
Cover lifting lug (Note 4)	6
Bottom protective covers (Note 2)	7

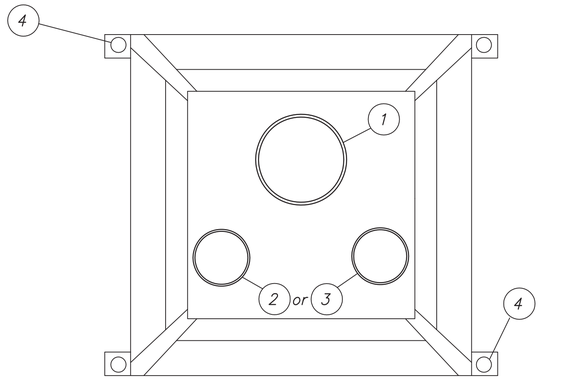

PLAN VIEW
TYPE 'A' STAND

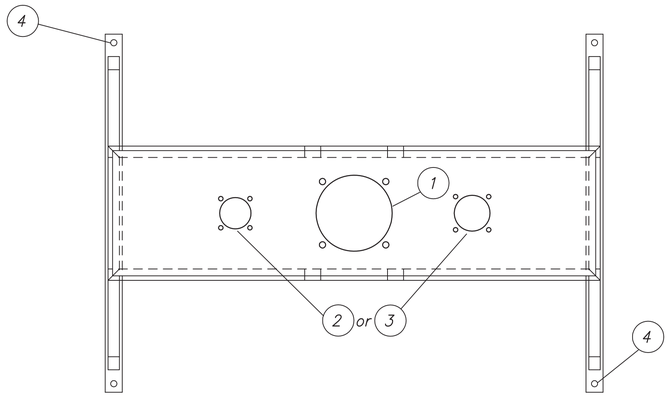

PLAN VIEW
TYPE 'B' STAND

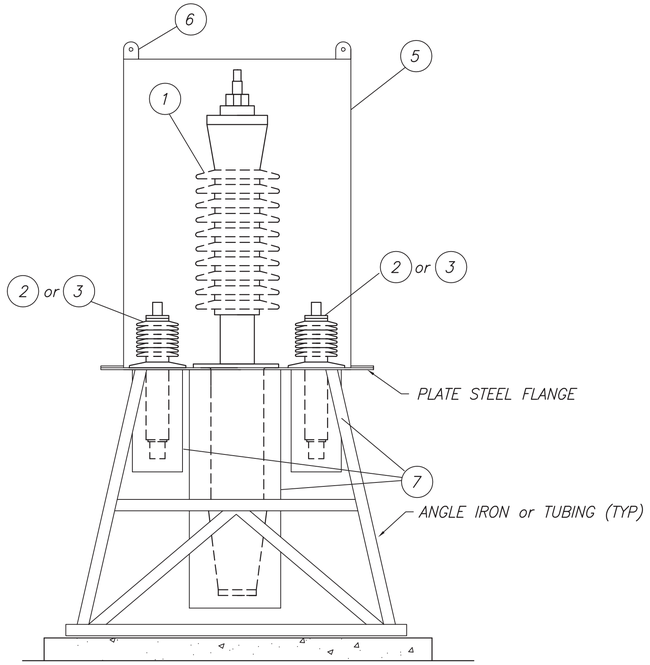

SECTION A-A

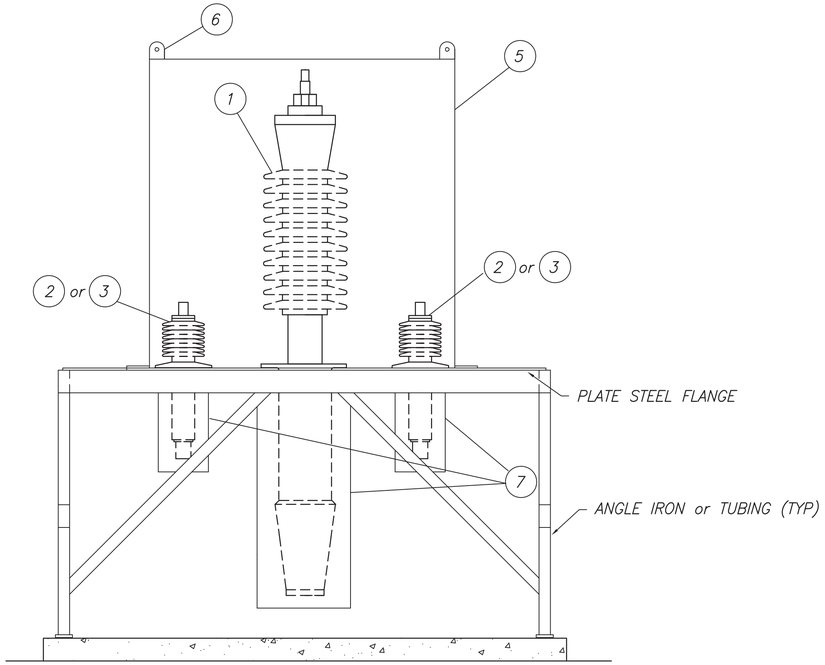

SECTION B-B

NOTES

1. Stand designed and painted by contractor (size, materials, etc.) in accordance with the specifications.
2. Provide protective covers as indicated in specifications.
3. Design cover to be bolted to top flange.
4. Provide warning nameplate on side of cover near each cover lifting lug as follows: "Cover lifting lugs only – not to be used to lift stand". Nameplate in accordance with Standard Drawing 40-D-6234, Type B.

REFERENCE DRAWING

STANDARD NAMEPLATES _____ 40-D-6234

REV NO		
1	2010-11-26 D - G. K. G.	REVISED TITLE; REVISED NOTE 4. (-68430: D.R.C.)

ALWAYS THINK SAFETY

UNITED STATES
DEPARTMENT OF THE INTERIOR
BUREAU OF RECLAMATION

STANDARD DESIGNS

POWER TRANSFORMER

ELECTRICAL INSTALLATION

STAND FOR SPARE BUSHINGS TYPES 'A' AND 'B'

DESIGNED D. R. CRAWFORD CHECKED L. GAMUCIELLO
DRAWN D. R. CRAWFORD TECH. APPR. T. L. WILLIAMS
APPROVED JAMES R. ZEIGER, P.E.
MANAGER, ELECTRICAL SYSTEMS GROUP

DENVER, COLORADO 2005-09-06
SHEET 1 OF 1

40-D-7099

CAD SYSTEM
AutoCAD Rel. 18.0s
CAD FILENAME
40-D-7099_REV01.DWG
DATE AND TIME PLOTTED
JANUARY 27, 2011 08:42
PLOTTED BY
DCRAWFORD

Released

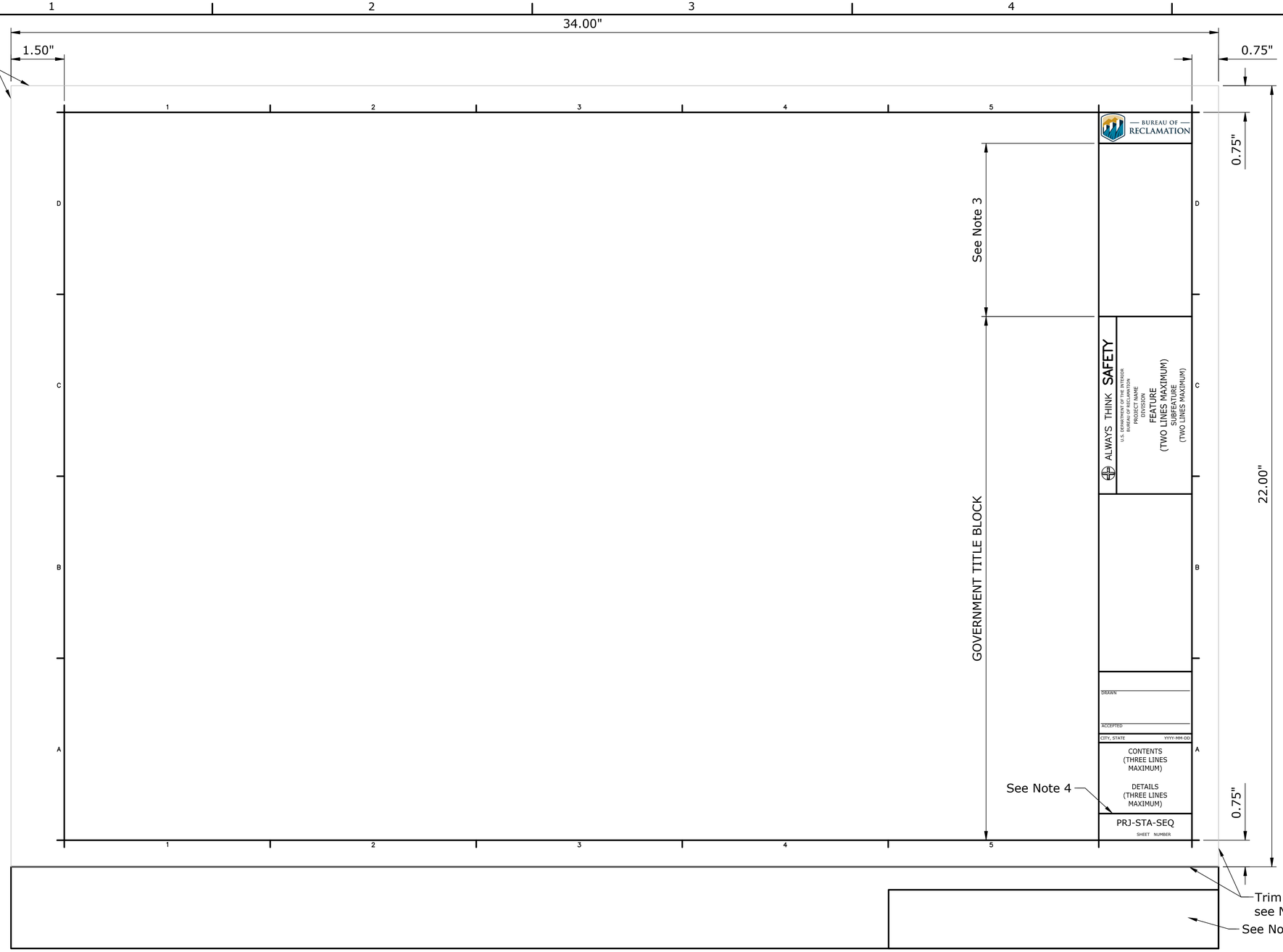

ALWAYS THINK SAFETY

U.S. DEPARTMENT OF THE INTERIOR
BUREAU OF RECLAMATION
YAKIMA PROJECT
KENNEWICK DIVISION

CHANDLER PUMPING PLANT

SWITCHYARD - STEEL STRUCTURES

SAMPLE TITLE

DRAWING BORDER

MANUFACTURER OR CONTRACTOR
DRAWN
ACCEPTED
TITLE

SAMPLE SIGNATURE LINES

REFERENCE

1. Information Management Handbook (IMH - 2020), Chapter 2, Section 9.A.4 - "Sheet Border" and Figures G2, G3, and G4.

NOTES

1. Government will provide contractor with an electronic AutoCAD template to be used by manufacturer for submittal of manufacturer's/contractors drawing in Government format.
2. The manufacturer's title block and drawing revisions as a result of the submittal process, may be located anywhere outside of the trim lines. The location shown on this drawing is the Government's preferred area.
3. The manufacturer shall show the Government solicitation/specification number, the manufacturer's name, drawing and sheet number in this area.
4. Government drawing number(s) will be issued at the end of the submittal process and drawing will be entered into the Government's electronic drawing system by the Government.
5. Trim lines shall be shown on all submitted drawings.

BUREAU OF RECLAMATION

ALWAYS THINK SAFETY

U.S. DEPARTMENT OF THE INTERIOR
BUREAU OF RECLAMATION
STANDARD DRAWINGS

STANDARD AND TYPICAL DESIGNS

GOVERNMENT DRAWING FORMAT

REV NO		
3	2023-04-20 Barthel, Rodney J P.E.	D UPDATED DRAWING TO CURRENT DRAWING RECORDS SYSTEM. MINOR REVISIONS.
2	2015-03-25 Barthel, Rodney J P.E.	D UPDATED TITLE BLOCK AND SIGNATURE LINES.
1	2014-12-17 E. Mendlin	D UPDATED TITLE BLOCK AND SIGNATURE LINES.

S. NITTA
DESIGNED
S. NITTA
DRAWN
D. CRAWFORD
CHECKED
R. BARTHEL, P.E.
TECH. APPR.
R.W. LAFOND, P.E.
APPROVED
ADMIN APPROVAL -

DENVER, CO

DRAWING BORDER, SAMPLE TITLE BLOCK, AND SIGNATURE LINES

40-D-7102

SHEET 1