Embassy of the United States of America

Bangkok, Thailand

August 3, 2026

Dear Prospective Quoter:

Subject: Request for Quotations number 19TH2026Q0061 – ILEA Interpreting Equipment Replacement

Enclosed is a Request for Quotations (RFQ) for ILEA Interpreting Equipment Replacement. If you would like to submit a quotation, follow the instructions in Section 3 of the solicitation, complete the required portions of the attached document, and submit it to the address shown on the SF-1449 that follows this letter.

The U.S. government intends to award a contract/purchase order to the responsible company submitting an acceptable offer at the lowest price. We intend to award a contract/purchase order based on initial quotations, without holding discussions, although we may hold discussions with companies in the competitive range if there is a need to do so.

A site visit is required and has been scheduled for August 11, 2026 at 10:30 AM at ILEA, 88/8 Moo 3, Vibhavadi-Rangsit Road, Talad Bangkhen, Laksi, Bangkok 10210 Thailand. Please submit personnel information by August 10, 2026 before 14:00 PM to soontare@state.gov to join the site visit.

Questions regarding this solicitation must be submitted to e-mail: soontare@state.gov and no later than August 17, 2026 before 15:30 PM (Bangkok time). Questions must be in English.

Quotations are due by September 1, 2026 at 15:00 PM (Bangkok time). No quotations will be accepted after this time. Proposals must be in English and incomplete proposals will not be accepted.

Your quotation must be submitted electronically via e-mail: soontare@state.gov; Subject: **RFQ** 19TH2026Q0061 – ILEA Interpreting Equipment Replacement**.** It is important to make sure the submission is made in a specific size and format; in MS-Word 2007/2010 or MS-Excel 2007/2010 or Adobe Acrobat (pdf) file format. The file size must not exceed 30MB. If the file size should exceed 30MB, the submission must be made in separate files and attached to separate emails with less than 30MB each.

In order for a quotation to be considered, you must also complete and submit the following:

1. SF-1449
2. Section 1, Pricing
3. Additional information as required in Section 3
4. Proof of SAM Registration

Offerors shall be registered in the SAM (System for Award Management) database at https://www.sam.gov prior to submittal of their offer/proposal as prescribed under FAR 4.1102. Failure to be registered at time of proposal submission may deem the offeror's proposal to be considered non-responsible and no further consideration will be given. Therefore, offerors are highly encouraged to register immediately if they are interested in submitting a response to this requirement.

Sincerely,

Ramon J Menendez-Carreira

Digitally signed by Ramon J Menendez-Carreira
Date: 2026.08.04 07:23:44 +07'00'

Ramon Menendez-Carreira
Contracting Officer

Enclosure:

SOLICITATION/CONTRACT/ORDER FOR COMMERCIAL ITEMS

OFFEROR TO COMPLETE BLOCKS 12, 17, 23, 24, & 30

			1. REQUISITION NUMBER PR16140504	PAGE 1 OF 1 of 59
2. CONTRACT NO.	3. AWARD/EFFECTIVE DATE	4. ORDER NUMBER	5. SOLICITATION NUMBER 19TH2026Q0061	6. SOLICITATION ISSUE DATE August 3, 2026
7. FOR SOLICITATION INFORMATION CALL: ▶	a. NAME Contracting Officer		b. TELEPHONE NUMBER **soontare@state.gov**	8. OFFER DUE DATE/ : **Sep. 1, 2026; 15:00PM**

9. ISSUED BY CODE

U.S. Embassy Bangkok
GSO/Contracting & Procurement Office
Bangkok

10. THIS ACQUISITION IS X UNRESTRICTED OR ☐ SET ASIDE:____ % FOR:

☐ SMALL BUSINESS
☐ WOMEN-OWNED SMALL BUSINESS
☐ HUBZONE SMALL BUSINESS
☐ (WOSB) ELLIGIBLE UNDER THE WOMEN-OWNED SMALL BUSINESS PROGRAM NAICS:
☐ SERVICE-DISABLED VETERAN-OWNED SMALL BUSINESS
☐ EDWOSB
☐ 8 (A) SIZE STANDARD:

11. DELIVERY FOR FOB DESTINATION UNLESS BLOCK IS MARKED
☐ SEE SCHEDULE

12. DISCOUNT TERMS

☐ 13a. THIS CONTRACT IS A RATED ORDER UNDER DPAS (15 CFR 700)

13b. RATING

14. METHOD OF SOLICITATION
X RFQ ☐ IFB ☐ RFP

15. DELIVER TO CODE

U.S. Embassy Bangkok
Attn: ILEA

16. ADMINISTERED BY CODE

17a. Contractor/Offeror CODE FACILITY CODE

18a. PAYMENT WILL BE MADE BY CODE
American Embassy Bangkok
Financial Management Officer (NOB)

☐ 17b. CHECK IF REMITTANCE IS DIFFERENT AND PUT SUCH ADDRESS IN OFFER

18b. SUBMIT INVOICES TO ADDRESS SHOWN IN BLOCK 18a UNLESS BLOCK BELOW IS CHECKED ☐ SEE ADDENDUM

19. ITEM NO.	20. SCHEDULE OF SUPPLIES/SERVICES	21. QUANTITY	22. UNIT	23. UNIT PRICE	24. AMOUNT
1	ILEA Interpreting Equipment Replacement. *See statement of work for details.*	1	all		

25. ACCOUNTING AND APPROPRIATION DATA

26. TOTAL AWARD AMOUNT *(For Govt. Use Only)*

X 27a.SOLICITATION INCORPORATES BY REFERENCE FAR 52.212-1, 52.212-4. FAR 52.212-3 AND 52.212-5 ARE ATTACHED. ADDENDA X ARE ☐ ARE NOT ATTACHED

☐ 27b.CONTRACT/PURCHASE ORDER INCORPORATES BY REFERENCE FAR 52.212-4. FAR 52.212-5 IS ATTACHED. ADDENDA ☐ ARE ☐ ARE NOT ATTACHED

☐ 28. CONTRACTOR IS REQUIRED TO SIGN THIS DOCUMENT AND RETURN ____ COPIES TO ISSUING OFFICE. CONTRACTOR AGREES TO FURNISH AND DELIVER ALL ITEMS SET FORTH OR OTHERWISE IDENTIFIED ABOVE AND ON ANY ADDITIONAL SHEETS SUBJECT TO THE TERMS AND CONDITIONS SPECIFIED HEREIN.

☐ 29. AWARD OF CONTRACT: REF. _____ OFFER DATED _____. YOUR OFFER ON SOLICITATION (BLOCK 5), INCLUDING ANY ADDITIONS OR CHANGES WHICH ARE SET FORTH HEREIN, IS ACCEPTED AS TO ITEMS:

30a. SIGNATURE OF OFFEROR/CONTRACTOR

31a. UNITED STATES OF AMERICA *(SIGNATURE OF CONTRACTING OFFICER)*

30b. NAME AND TITLE OF SIGNER *(Type or print)* 30c. DATE SIGNED

31b. NAME OF CONTRACTING OFFICER *(Type or print)* 31c. DATE SIGNED

TABLE OF CONTENTS

SECTION 1 - THE SCHEDULE

- SF 1449 cover sheet
- Continuation To SF-1449, RFQ Number 19TH2026Q0061, Prices, Block 23
- Continuation To SF-1449, RFQ Number 19TH2026Q0061, Schedule Of Supplies/Services, Block 20 Description/Specifications/Work Statement
- Attachment 1 to Description/Specifications/Performance Work Statement, Government Furnished Property

SECTION 2 - CONTRACT CLAUSES

- Contract Clauses
- Addendum to Contract Clauses - FAR and DOSAR Clauses not Prescribed in Part 12

SECTION 3 - SOLICITATION PROVISIONS

- Solicitation Provisions
- Addendum to Solicitation Provisions - FAR and DOSAR Provisions not Prescribed in Part 12

SECTION 4 - EVALUATION FACTORS

- Evaluation Factors
- Addendum to Evaluation Factors - FAR and DOSAR Provisions not Prescribed in Part 12

SECTION 5 - REPRESENTATIONS AND CERTIFICATIONS

- Offeror Representations and Certifications
- Addendum to Offeror Representations and Certifications - FAR and DOSAR Provisions not Prescribed in Part 12

SECTION 1 - THE SCHEDULE
CONTINUATION TO SF-1449
RFQ NUMBER 19TH2026Q0061
PRICES, BLOCK 23

1. PERFORMANCE WORK STATEMENT

The Contractor shall complete all work (including furnishing all labor, material, equipment and services) required under this contract for the following firm fixed price and within the time specified.

This price shall include all labor, materials, overhead (including insurance required by FAR 52.228-3, Workers' Compensation and War-Hazard Insurance), and profit.

2. PRICING

No.	Description	Total
1	Total Price (Including all labor, materials, overhead and profit)	
2	DBA Insurance	
	GRAND TOTAL (1+2)	

3. VALUE ADDED TAX.

The Government will not reimburse the Contractor for VAT under this contract. The Contractor shall not include a line for VAT on invoices as the U.S. Embassy has a tax exemption certificate with the host government.

CONTINUATION TO SF-1449,
RFQ NUMBER 19TH2026Q0061
SCHEDULE OF SUPPLIES/SERVICES, BLOCK 20
DESCRIPTION/SPECIFICATIONS/STATEMENT OF WORK

1. TITLE

Interpreting Equipment Replacement

2. CLIENT

The International Law Enforcement Academy (ILEA) Bangkok
88/8 Moo 3, Vibhavadi-Rangsit Road, Talad Bangkhen, Laksi, Bangkok 10210, Thailand

3. CONTRACTING OFFICER REPRESENTATIVE (COR) for ILEA Bangkok

ILEA Bangkok Chief of Information Technology

4. OBJECTIVE

ILEA Bangkok seeks to replace the interpreting equipment in Chiang Mai, Ayutthaya, and Phuket classrooms at ILEA Bangkok in order to support ILEA courses where simultaneous interpretation is essential. The contract type shall be a firm fixed price.

5. CONTRACTOR PRE-AWARDED REQUIREMENT

1. The Contractor shall have been engaged in the audiovisual or interpretation solutions business for no less than five (5) years – Proof of documentation shall be provided.

2. The Contractor must be an authorized distributor or partner with the Original Equipment Manufacturer (OEM) for the core product – Proof of documentation shall be provided.

3. The Contractor must have worked and experienced in a deploying and configuring prior experience deploying and configuring complex audiovisual or interpreting equipment, with a project value of no less than $250,000 – Proof of documentation shall be provided.

4. The Contractor's engineer(s) or subcontractor(s) shall be certified by the OEM to install and configure the core product – Proof of documentation shall be provided.

5. **The Contractor shall complete the project, including delivering all good(s) and services(s) within 120 days of contract award** and shall submit a project management plan and schedule demonstrating the ability to complete the work as stated in this SOW – Documentation shall be provided.

6. CONTRACTOR REQUIREMENT

1. The Contractor shall be permitted access to the facilities to complete this project, according to the following schedule: Monday through Friday, 08:30 to 16:30. ILEA classes and activities must not be interrupted or affected in any way by this work, including by excessive noise. If after hours or holiday work is required, the Contractor shall coordinate and obtain approval from the COR in advance.

2. The Contractor shall inspect the existing equipment where the new equipment will be installed and integrated to confirm working condition prior to any transportation, removal, and/or installation of the new equipment. Any damage or malfunction identified shall be reported to the COR in writing; otherwise, the equipment shall be deemed to be in good working condition.

3. The Contractor shall have full responsibility for all equipment until final hand-over and project delivery. ILEA Bangkok shall not be responsible for any damaged, misplaced, or lost equipment during the course of the project.

7. CONTRACTOR RESPONSIBILITY

7.1 Overview

The purpose of this work is to obtain the hardware and services needed to decommission the existing equipment, component and cabling; and installation of new interpreting equipment and related components for Chiang Mai (205), Ayutthaya (204), and Phuket (304) classrooms at ILEA Bangkok. A new, larger communications rack shall be provided in each classroom. Existing equipment shall be relocated, and new equipment shall be installed in the new rack. The Contractor shall integrate all systems and ensure that they function together and are fully compatible with one another. The Contractor shall configure and fine-tune all equipment components, including both new and re-purposed equipment, in accordance with OEM specifications and industry best practices to ensure full integration.

All work performed by the Contractor shall be concealed wherever possible within ceilings, walls, furniture, and/or floors. All concealment work and equipment shall be approved by the COR. The Contractor shall patch and paint any area where work is performed, including areas affected by the decommissioning and/or installation of equipment and cabling. All surfaces shall be painted to match the substrate.

The Contractor shall include minor cleanup and disposal efforts upon each day's completion of work. All decommissioned equipment, components, and cabling shall be inventoried by the Contractor and carefully stored in boxes provided by the Contractor, then handed over to the designated ILEA representative.

7.2 Diagrams

The Contractor shall use the following diagrams as the minimum baseline for equipment and cabling installation and connections for this project. The Contractor may modify these diagrams as needed; however, any redesigned solution must achieve the same outcome, and the redesigned diagrams shall be submitted with the proposal.

Ayutthaya (204) Classroom

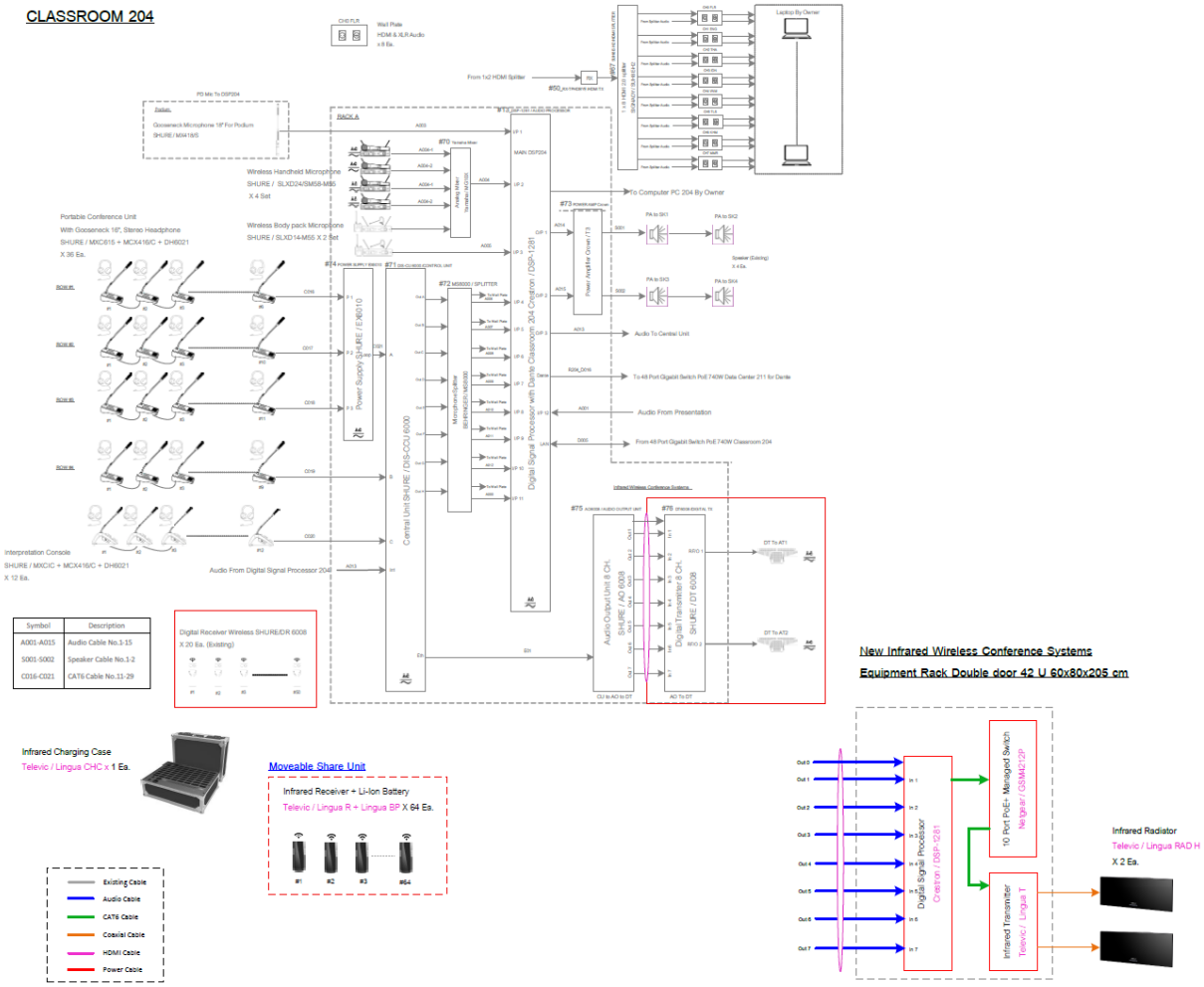

Symbol	Description
A001-A015	Audio Cable No.1-15
S001-S002	Speaker Cable No.1-2
C016-C021	CAT6 Cable No.11-29

Chiang Mai (205) Classroom

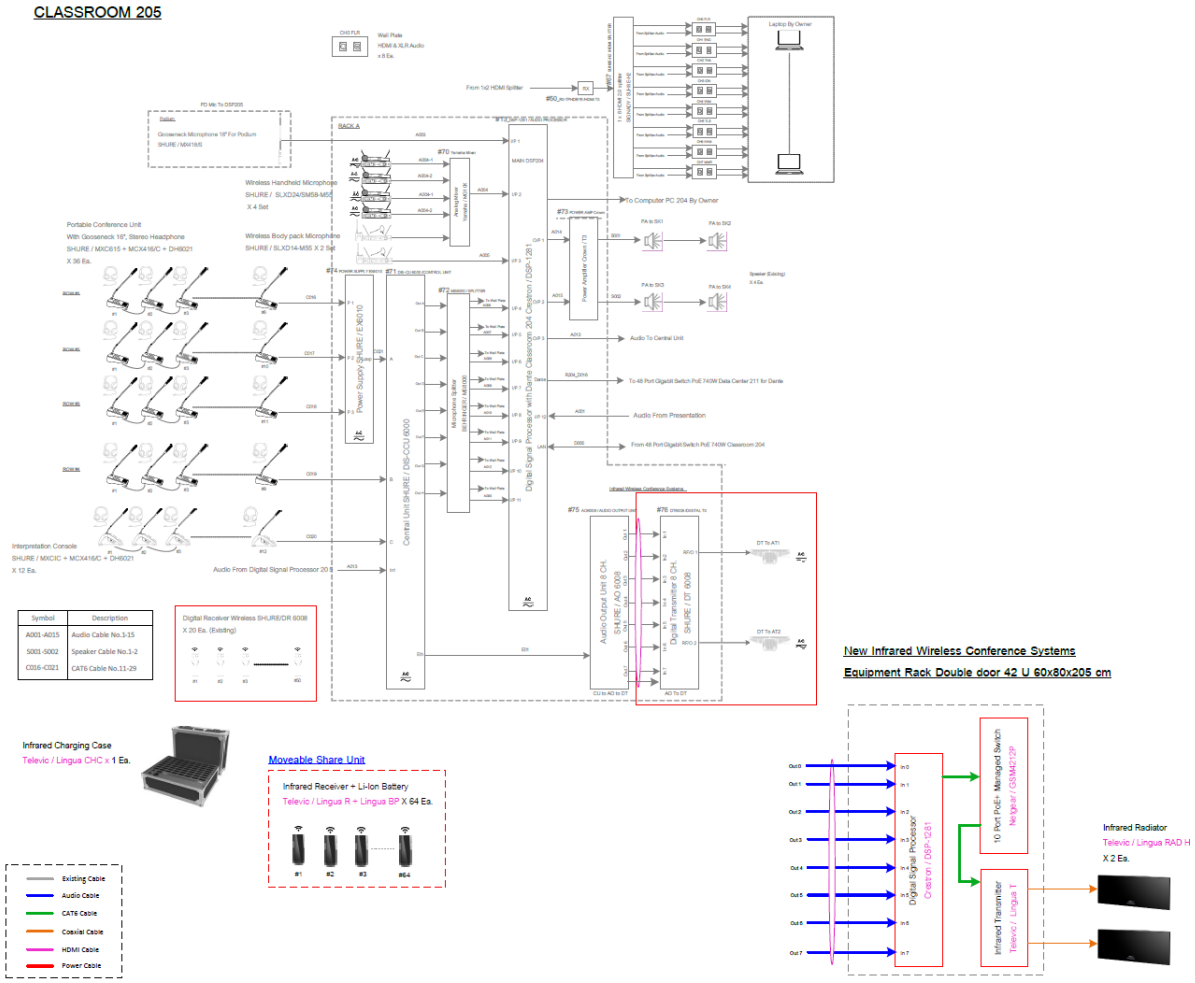

Phuket (304) Classroom

CLASSROOM 304

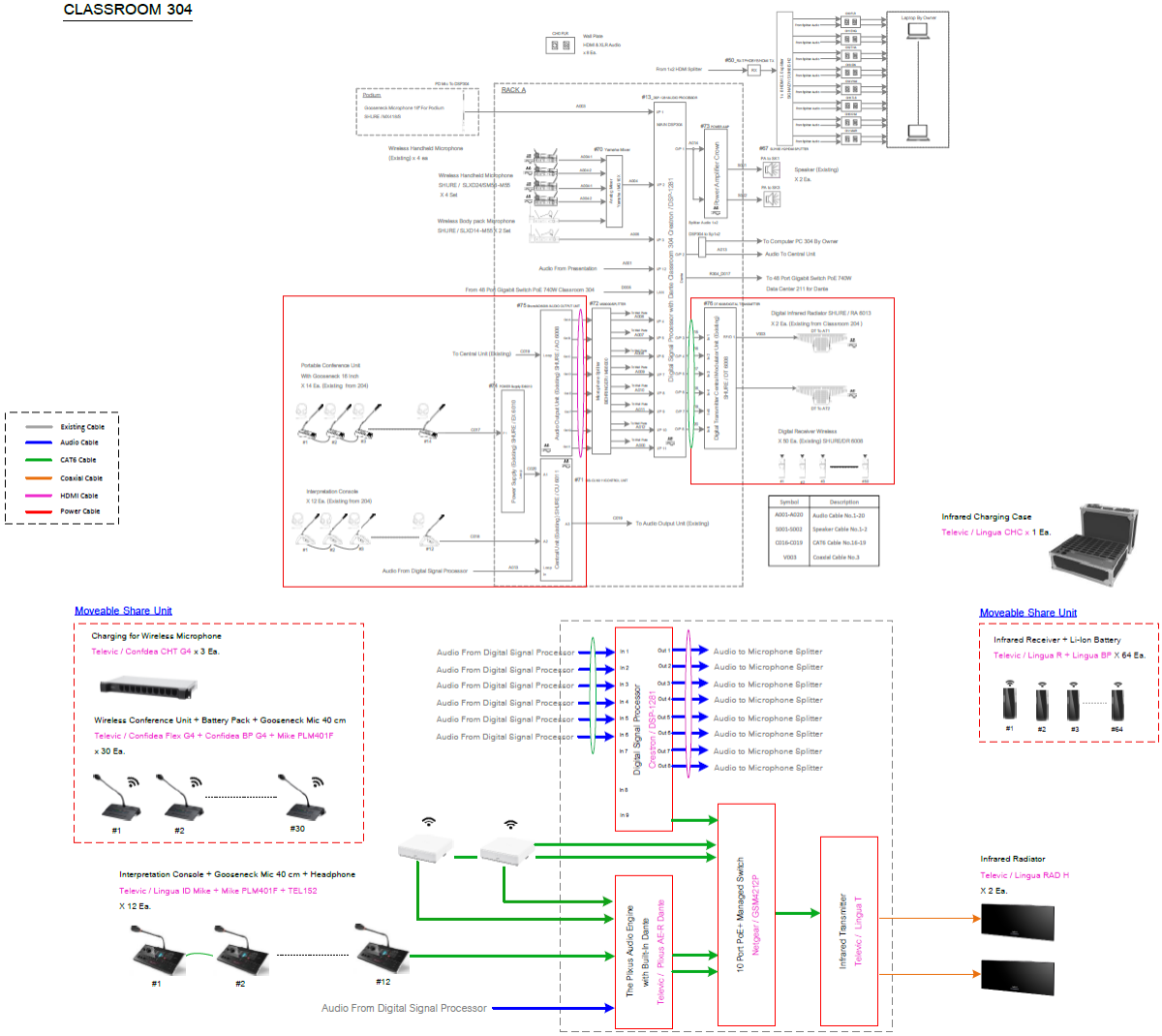

8. HARDWARE AND SOFTWARE LICENSES

The Contractor shall provide all hardware and software licenses required to complete this project.
The tables below list, at a minimum, the core equipment required.

All network cables installed under this project shall be a minimum of CAT6 standard and yellow in color.

The Contractor shall identify and include any additional equipment, parts, and/or components necessary to complete the work.

Ayutthaya (204) Classroom	
Item Descriptions –	**Quantity**
Digital Infrared Transmitter, TELEVIC LINGUA T	1
Digital Infrared Radiator, TELEVIC LINGUA RAD H	2
Wall Mount for Radiator, TELEVIC LINGUA RAD MOUNT	2
License Upgrade to 12 Channels, TELEVIC LINGUA L12	SET
12x8 Digital Signal Processor w/Dante, CRESTRON DSP-1281	1
10 Port Gigabit Managed Switch POE+, NETGEAR GSM4212P	1
Digital Infrared Charging Case (Support 64 Unit of LINGUA R), TELEVIC LINGUA CHC	1
Antenna Distribution Wireless Microphone, SHURE UA844+SWB-E	2
Wireless Microphone Antenna, SHURE UA874WB	2
42U Rack Double Door 60 x 80 x 205 cm with Accessories, GERMANY RACK 42U	1
Signal Cable, Connector and Accessories	LOT
Installation, Testing, Configurations	JOB

Chiang Mai (205) Classroom	
Item Descriptions –	**Quantity**
Digital Infrared Transmitter, TELEVIC LINGUA T	1
Digital Infrared Radiator, TELEVIC LINGUA RAD H	2
Wall Mount for Radiator, TELEVIC LINGUA RAD MOUNT	2
License Upgrade to 12 Channels, TELEVIC LINGUA L12	SET
12x8 Digital Signal Processor w/Dante, CRESTRON DSP-1281	1
10 Port Gigabit Managed Switch POE+, NETGEAR GSM4212P	1
Digital Infrared Charging Case (Support 64 Unit of LINGUA R), TELEVIC LINGUA CHC	1
Antenna Distribution Wireless Microphone, SHURE UA844+SWB-E	2
Wireless Microphone Antenna, SHURE UA874WB	2
42U Rack Double door 60 x 80 x 205 cm with Accessories, GERMANY RACK 42U	1
Signal Cable, Connector and Accessories	LOT
Installation, Testing, Configurations	JOB

Phuket (304) Classroom	
Item Descriptions –	**Quantity**
Digital Infrared Transmitter, TELEVIC LINGUA T	1
Digital Infrared Radiator, TELEVIC LINGUA RAD H	2
Wall Mount for Radiator, TELEVIC LINGUA RAD MOUNT	2
License Upgrade to 12 Channels, TELEVIC LINGUA L12	SET
License Upgrade Confero Advanced Interpretation	SET
12x8 Digital Signal Processor w/Dante, CRESTRON DSP-1281	1
10 Port Gigabit Managed Switch POE+, NETGEAR GSM4212P	1
The Plixus Audio Engine with Built-In Dante, TELEVICPLIXUS AE-R DANTE	1
Power Supply, TELEVIC PLIXUS AE-R PS	1
Interpreter Desk, TELEVIC LINGUA ID MIKE	12
Gooseneck Microphone 40 cm, TELEVIC MIKE PLM401F	12
Confidea Wireless Access Point, TELEVIC Confidea WAP G4	2
Wireless Conference Unit with Touch Screen, TELEVIC Confidea Flex G4	30
Battery Pack, TELEVIC Confidea BP G4	30
Gooseneck Microphone 40 cm, TELEVIC Mike PLM401F	30
License to Activate Language Selection on Confidea FLEX unit, TELEVIC L-LS	30
Confidea Charging Tray, TELEVIC Confidea CHT G4	6
Mobile case for Wireless Conference Mic (6 Units per Set)	5
Digital Infrared Charging Case (Support 64 Unit of LINGUA R), TELEVIC LINGUA CHC	1
Digital Infrared Receiver, TELEVIC LINGUA R	64
Antenna Distribution Wireless Microphone, SHURE UA844+SWB-E	2
Wireless Microphone Antenna, SHURE UA874WB	2
42U Rack Double door 60 x 80 x 205 cm with accessories, GERMANY RACK 42U	1
Signal Cable, Connector and Accessories	LOT
Installation, Testing, Configurations	JOB

9. WARRANTY AND ONSITE SERVICE AGREEMENT

1. A minimum of two (2) years total solution warranty with onsite service and advance spare part. The warranty cannot be less than what is offered to the general public, based on the manufacturer's policy.

2. The Contractor shall respond to any service request no later than the next business day.

10. COMPLETION DOCUMENT

1. The Contractor shall provide project completion documentation upon delivery. At a minimum, the close-out documentation shall include:

    a. A comprehensive Bill of Materials (BOM) for all hardware and software. The BOM shall include Item Description, Manufacturer Name, Model Number, Serial Number, Delivered Quantity, Unit Price, Extended Price, and Warranty or Subscription Start and Expiration Dates.

b. OEM manuals for all hardware and software.

c. Results of all system and cable testing.

d. Final physical and logical designs and diagrams, provided in digital format, including the location of all installed components.

11. FAMILIARIZATION & TRAINING

The Contractor shall provide product and system familiarization and/or training sessions to ILEA staff.

SECTION 2 - CONTRACT CLAUSES

52.212-4 CONTRACT TERMS AND CONDITIONS – COMMERCIAL ITEMS (NOV 2023) IS INCORPORATED BY REFERENCE. (SEE SF-1449, BLOCK 27A)

FAR 52.212-5 Contract Terms and Conditions Required to Implement Statutes or Executive Orders—Commercial Products and Commercial Services (JAN 2025)

(a) The Contractor shall comply with the following Federal Acquisition Regulation (FAR) clauses, which are incorporated in this contract by reference, to implement provisions of law or Executive orders applicable to acquisitions of commercial products and commercial services:
(1) 52.203-19, Prohibition on Requiring Certain Internal Confidentiality Agreements or Statements (Jan 2017) (section 743 of Division E, Title VII, of the Consolidated and Further Continuing Appropriations Act, 2015 (Pub. L. 113-235) and its successor provisions in subsequent appropriations acts (and as extended in continuing resolutions)).
(2) 52.204-23, Prohibition on Contracting for Hardware, Software, and Services Developed or Provided by Kaspersky Lab Covered Entities (Dec 2023) (Section 1634 of Pub. L. 115-91).
(3) 52.204-25, Prohibition on Contracting for Certain Telecommunications and Video Surveillance Services or Equipment. (Nov 2021) (Section 889(a)(1)(A) of Pub. L. 115-232).
(4) 52.209-10, Prohibition on Contracting with Inverted Domestic Corporations (Nov 2015).
(5) 52.232-40, Providing Accelerated Payments to Small Business Subcontractors (Mar 2023) (31 U.S.C. 3903 and 10 U.S.C. 3801).
(6) 52.233-3, Protest After Award (Aug 1996) (31 U.S.C. 3553).
(7) 52.233-4, Applicable Law for Breach of Contract Claim (Oct 2004) (Public Laws 108-77 and 108-78 (19 U.S.C. 3805 note)).

(b) The Contractor shall comply with the FAR clauses in this paragraph (b) that the Contracting Officer has indicated as being incorporated in this contract by reference to implement provisions of law or Executive orders applicable to acquisitions of commercial products and commercial services:

X (1) 52.203-6, Restrictions on Subcontractor Sales to the Government (Jun 2020), with *Alternate I* (Nov 2021) (41 U.S.C. 4704 and 10 U.S.C. 4655).
__ (2) 52.203-13, Contractor Code of Business Ethics and Conduct (Nov 2021) (41 U.S.C. 3509)).
__ (3) 52.203-15, Whistleblower Protections under the American Recovery and Reinvestment Act of 2009 (Jun 2010) (Section 1553 of Pub. L. 111-5). (Applies to contracts funded by the American Recovery and Reinvestment Act of 2009.)
__ (4) 52.203-17, Contractor Employee Whistleblower Rights (Nov 2023) (41 U.S.C. 4712); this clause does not apply to contracts of DoD, NASA, the Coast Guard, or applicable elements of the intelligence community—see FAR 3.900(a).
_X_ (5) 52.204-10, Reporting Executive Compensation and First-Tier Subcontract Awards (Jun 2020) (Pub. L. 109-282) (31 U.S.C. 6101 note).
__ (6) [Reserved].

__ (7) 52.204-14, Service Contract Reporting Requirements (Oct 2016) (Pub. L. 111-117, section 743 of Div. C).
__ (8) 52.204-15, Service Contract Reporting Requirements for Indefinite-Delivery Contracts (Oct 2016) (Pub. L. 111-117, section 743 of Div. C).
_X_ (9) 52.204-27, Prohibition on a ByteDance Covered Application (Jun 2023) (Section 102 of Division R of Pub. L. 117-328).
__ (10) 52.204-28, Federal Acquisition Supply Chain Security Act Orders—Federal Supply Schedules, Governmentwide Acquisition Contracts, and Multi-Agency Contracts. (Dec 2023) (Pub. L. 115–390, title II).
__ (11)
(i) 52.204-30, Federal Acquisition Supply Chain Security Act Orders—Prohibition. (Dec 2023) (Pub. L. 115–390, title II).
__ (ii) Alternate I (Dec 2023) of 52.204-30.
_X_ (12) 52.209-6, Protecting the Government's Interest When Subcontracting With Contractors Debarred, Suspended, Proposed for Debarment, or Voluntarily Excluded. (Jan 2025) (31 U.S.C. 6101 note).
__ (13) 52.209-9, Updates of Publicly Available Information Regarding Responsibility Matters (Oct 2018) (41 U.S.C. 2313).
__ (14) [Reserved].
__ (15) 52.219-3, Notice of HUBZone Set-Aside or Sole-Source Award (Oct 2022) (15 U.S.C. 657a).
__ (16) 52.219-4, Notice of Price Evaluation Preference for HUBZone Small Business Concerns (Oct 2022) (if the offeror elects to waive the preference, it shall so indicate in its offer) (15 U.S.C. 657a).
__ (17) [Reserved]
__ (18)
(i) 52.219-6, Notice of Total Small Business Set-Aside (Nov 2020) (15 U.S.C. 644).
__ (ii) Alternate I (Mar 2020) of 52.219-6.
__ (19)
(i) 52.219-7, Notice of Partial Small Business Set-Aside (Nov 2020) (15 U.S.C. 644).
__ (ii) Alternate I (Mar 2020) of 52.219-7.
__ (20) 52.219-8, Utilization of Small Business Concerns (Jan 2025)(15 U.S.C. 637(d)(2) and (3)).
__ (21)
(i) 52.219-9, Small Business Subcontracting Plan (Jan 2025) (15 U.S.C. 637(d)(4)).
__ (ii) Alternate I (Nov 2016) of 52.219-9.
__ (iii) Alternate II (Nov 2016) of 52.219-9.
__ (iv) Alternate III (Jun 2020) of 52.219-9.
__ (v) Alternate IV (Jan 2025) of 52.219-9.
__ (22)
(i) 52.219-13, Notice of Set-Aside of Orders (Mar 2020) (15 U.S.C. 644(r)).
__ (ii) Alternate I (Mar 2020) of 52.219-13.
__ (23) 52.219-14, Limitations on Subcontracting (Oct 2022) (15 U.S.C. 657s).
__ (24) 52.219-16, Liquidated Damages—Subcontracting Plan (Sep 2021) (15 U.S.C. 637(d)(4)(F)(i)).

__ (25) 52.219-27, Notice of Set-Aside for, or Sole-Source Award to, Service-Disabled Veteran-Owned Small Business (SDVOSB) Concerns Eligible Under the SDVOSB Program (Feb 2024) (15 U.S.C. 657f).
__ (26)
(i) 52.219-28, Postaward Small Business Program Representation (Jan 2025) (15 U.S.C. 632(a)(2)).
__ (ii) Alternate I (Mar 2020) of 52.219-28.
__ (27) 52.219-29, Notice of Set-Aside for, or Sole-Source Award to, Economically Disadvantaged Women-Owned Small Business Concerns (Oct 2022) (15 U.S.C. 637(m)).
__ (28) 52.219-30, Notice of Set-Aside for, or Sole-Source Award to, Women-Owned Small Business Concerns Eligible Under the Women-Owned Small Business Program (Oct 2022) (15 U.S.C. 637(m)).
__ (29) 52.219-32, Orders Issued Directly Under Small Business Reserves (Mar 2020) (15 U.S.C. 644(r)).
__ (30) 52.219-33, Nonmanufacturer Rule (Sep 2021) (15 U.S.C. 637(a)(17)).
__ (31) 52.222-3, Convict Labor (Jun 2003) (E.O.11755).
_X_ (32) 52.222-19, Child Labor—Cooperation with Authorities and Remedies (Jan 2025)(E.O. 13126).
__ (33) 52.222-21, Prohibition of Segregated Facilities (Apr 2015).
__ (34)
(i) 52.222-26, Equal Opportunity (Sep 2016) (E.O.11246).
__ (ii) Alternate I (Feb 1999) of 52.222-26.
__ (35)
(i) 52.222-35, Equal Opportunity for Veterans (Jun 2020) (38 U.S.C. 4212).
__ (ii) Alternate I (Jul 2014) of 52.222-35.
__ (36)
(i) 52.222-36, Equal Opportunity for Workers with Disabilities (Jun 2020) (29 U.S.C. 793).
__ (ii) Alternate I (Jul 2014) of 52.222-36.
__ (37) 52.222-37, Employment Reports on Veterans (Jun 2020) (38 U.S.C. 4212).
__ (38) 52.222-40, Notification of Employee Rights Under the National Labor Relations Act (Dec 2010) (E.O. 13496).
_X_ (39)
(i) 52.222-50, Combating Trafficking in Persons (Nov 2021) (22 U.S.C. chapter 78 and E.O. 13627).
__ (ii) Alternate I (Mar 2015) of 52.222-50 (22 U.S.C. chapter 78 and E.O. 13627).
__ (40) 52.222-54, Employment Eligibility Verification (Jan 2025) (Executive Order 12989). (Not applicable to the acquisition of commercially available off-the-shelf items or certain other types of commercial products or commercial services as prescribed in FAR 22.1803.)
__ (41)
(i) 52.223-9, Estimate of Percentage of Recovered Material Content for EPA–Designated Items (May 2008) (42 U.S.C. 6962(c)(3)(A)(ii)). (Not applicable to the acquisition of commercially available off-the-shelf items.)
__ (ii) Alternate I (May 2008) of 52.223-9 (42 U.S.C. 6962(i)(2)(C)). (Not applicable to the acquisition of commercially available off-the-shelf items.)
__ (42) 52.223-11, Ozone-Depleting Substances and High Global Warming Potential Hydrofluorocarbons (May 2024) (42 U.S.C. 7671, *et seq.*).

__ (43) 52.223-12, Maintenance, Service, Repair, or Disposal of Refrigeration Equipment and Air Conditioners (May 2024) (42 U.S.C. 7671, *et seq.*).
__ (44) 52.223-20, Aerosols (May 2024) (42 U.S.C. 7671, *et seq.*).
__ (45) 52.223-21, Foams (May 2024) (42 U.S.C. 7671, *et seq.*).
__ (46) 52.223-23, Sustainable Products and Services (May 2024) (E.O. 14057, 7 U.S.C. 8102, 42 U.S.C. 6962, 42 U.S.C. 8259b, and 42 U.S.C. 7671l).
__ (47)
(i) 52.224-3 Privacy Training (Jan 2017) (5 U.S.C. 552 a).
__ (ii) Alternate I (Jan 2017) of 52.224-3.
__ (48)
(i) 52.225-1, Buy American-Supplies (Oct 2022) (41 U.S.C. chapter 83).
__ (ii) Alternate I (Oct 2022) of 52.225-1.
__ (49)
(i) 52.225-3, Buy American-Free Trade Agreements-Israeli Trade Act (NOV 2023) (19 U.S.C. 3301 note, 19 U.S.C. 2112 note, 19 U.S.C. 3805 note, 19 U.S.C. 4001 note, 19 U.S.C. chapter 29 (sections 4501-4732), Public Law 103-182, 108-77, 108-78, 108-286, 108-302, 109-53, 109-169, 109-283, 110-138, 112-41, 112-42, and 112-43.
__ (ii) Alternate I [Reserved].
__ (iii) Alternate II (Jan 2025) of 52.225-3.
__ (iv) Alternate III (Feb 2024) of 52.225-3.
__ (v) Alternate IV (Oct 2022) of 52.225-3.
__ (50) 52.225-5, Trade Agreements (NOV 2023) (19 U.S.C. 2501, *et seq*., 19 U.S.C. 3301 note).
_X_ (51) 52.225-13, Restrictions on Certain Foreign Purchases (Feb 2021) (E.O.'s, proclamations, and statutes administered by the Office of Foreign Assets Control of the Department of the Treasury).
__ (52) 52.225-26, Contractors Performing Private Security Functions Outside the United States (Oct 2016) (Section 862, as amended, of the National Defense Authorization Act for Fiscal Year 2008; 10 U.S.C. Subtitle A, Part V, Subpart G Note).
__ (53) 52.226-4, Notice of Disaster or Emergency Area Set-Aside (Nov 2007) (42 U.S.C. 5150).
__ (54) 52.226-5, Restrictions on Subcontracting Outside Disaster or Emergency Area (Nov 2007) (42 U.S.C. 5150).
__ (55) 52.226-8, Encouraging Contractor Policies to Ban Text Messaging While Driving (May 2024) (E.O. 13513).
_X_ (56) 52.229-12, Tax on Certain Foreign Procurements (Feb 2021).
_X_ (57) 52.232-29, Terms for Financing of Purchases of Commercial Products and Commercial Services (Nov 2021) (41 U.S.C. 4505, 10 U.S.C. 3805).
__ (58) 52.232-30, Installment Payments for Commercial Products and Commercial Services (Nov 2021) (41 U.S.C. 4505, 10 U.S.C. 3805).
_X_ (59) 52.232-33, Payment by Electronic Funds Transfer-System for Award Management (Oct2018) (31 U.S.C. 3332).
__ (60) 52.232-34, Payment by Electronic Funds Transfer-Other than System for Award Management (Jul 2013) (31 U.S.C. 3332).
__ (61) 52.232-36, Payment by Third Party (May 2014) (31 U.S.C. 3332).
__ (62) 52.239-1, Privacy or Security Safeguards (Aug 1996) (5 U.S.C. 552a).

__ (63) 52.240-1, Prohibition on Unmanned Aircraft Systems Manufactured or Assembled by American Security Drone Act-Covered Foreign Entities (Nov 2024) (Sections 1821-1826, Pub. L. 118-31, 41 U.S.C. 3901 note prec.).
__ (64) 52.242-5, Payments to Small Business Subcontractors (Jan 2017) (15 U.S.C. 637(d)(13)).
__ (65)
(i) 52.247-64, Preference for Privately Owned U.S.-Flag Commercial Vessels (Nov 2021) (46 U.S.C. 55305 and 10 U.S.C. 2631).
__ (ii) Alternate I (Apr 2003) of 52.247-64.
__ (iii) Alternate II (Nov 2021) of 52.247-64.

(c) The Contractor shall comply with the FAR clauses in this paragraph (c), applicable to commercial services, that the Contracting Officer has indicated as being incorporated in this contract by reference to implement provisions of law or Executive orders applicable to acquisitions of commercial products and commercial services:
[*Contracting Officer check as appropriate.*]
__ (1) 52.222-41, Service Contract Labor Standards (Aug 2018) (41 U.S.C. chapter67).
__ (2) 52.222-42, Statement of Equivalent Rates for Federal Hires (May 2014) (29 U.S.C. 206 and 41 U.S.C. chapter 67).
__ (3) 52.222-43, Fair Labor Standards Act and Service Contract Labor Standards-Price Adjustment (Multiple Year and Option Contracts) (Aug 2018) (29 U.S.C. 206 and 41 U.S.C. chapter 67).
__ (4) 52.222-44, Fair Labor Standards Act and Service Contract Labor Standards-Price Adjustment (May 2014) (29U.S.C.206 and 41 U.S.C. chapter 67).
__ (5) 52.222-51, Exemption from Application of the Service Contract Labor Standards to Contracts for Maintenance, Calibration, or Repair of Certain Equipment-Requirements (May 2014) (41 U.S.C. chapter 67).
__ (6) 52.222-53, Exemption from Application of the Service Contract Labor Standards to Contracts for Certain Services-Requirements (May 2014) (41 U.S.C. chapter 67).
__ (7) 52.222-55, Minimum Wages for Contractor Workers Under Executive Order 14026 (Jan 2022).
__ (8) 52.222-62, Paid Sick Leave Under Executive Order 13706 (Jan 2022) (E.O. 13706).
__ (9) 52.226-6, Promoting Excess Food Donation to Nonprofit Organizations (Jun 2020) (42 U.S.C. 1792).
__ (10) 52.247-69, Reporting Requirement for U.S.-Flag Air Carriers Regarding Training to Prevent Human Trafficking (Jan 2025) (49 U.S.C. 40118(g)).
(d) *Comptroller General Examination of Record*. The Contractor shall comply with the provisions of this paragraph (d) if this contract was awarded using other than sealed bid, is in excess of the simplified acquisition threshold, as defined in FAR 2.101, on the date of award of this contract, and does not contain the clause at 52.215-2, Audit and Records-Negotiation.
(1) The Comptroller General of the United States, or an authorized representative of the Comptroller General, shall have access to and right to examine any of the Contractor's directly pertinent records involving transactions related to this contract.
(2) The Contractor shall make available at its offices at all reasonable times the records, materials, and other evidence for examination, audit, or reproduction, until 3 years after final payment under this contract or for any shorter period specified in FAR subpart 4.7, Contractor Records Retention, of the other clauses of this contract. If this contract is completely or partially

terminated, the records relating to the work terminated shall be made available for 3 years after any resulting final termination settlement. Records relating to appeals under the disputes clause or to litigation or the settlement of claims arising under or relating to this contract shall be made available until such appeals, litigation, or claims are finally resolved.
(3) As used in this clause, records include books, documents, accounting procedures and practices, and other data, regardless of type and regardless of form. This does not require the Contractor to create or maintain any record that the Contractor does not maintain in the ordinary course of business or pursuant to a provision of law.
(e)
(1) Notwithstanding the requirements of the clauses in paragraphs (a), (b), (c), and (d) of this clause, the Contractor is not required to flow down any FAR clause, other than those in this paragraph (e)(1), in a subcontract for commercial products or commercial services. Unless otherwise indicated below, the extent of the flow down shall be as required by the clause-
(i) 52.203-13, Contractor Code of Business Ethics and Conduct (Nov 2021) (41 U.S.C. 3509).
(ii) 52.203-17, Contractor Employee Whistleblower Rights (Nov 2023) (41 U.S.C. 4712).
(iii) 52.203-19, Prohibition on Requiring Certain Internal Confidentiality Agreements or Statements (Jan 2017) (section 743 of Division E, Title VII, of the Consolidated and Further Continuing Appropriations Act, 2015 (Pub. L. 113-235) and its successor provisions in subsequent appropriations acts (and as extended in continuing resolutions)).
(iv) 52.204-23, Prohibition on Contracting for Hardware, Software, and Services Developed or Provided by Kaspersky Lab Covered Entities (Dec 2023) (Section 1634 of Pub. L. 115-91).
(v) 52.204-25, Prohibition on Contracting for Certain Telecommunications and Video Surveillance Services or Equipment. (Nov 2021) (Section 889(a)(1)(A) of Pub. L. 115-232).
(vi) 52.204-27, Prohibition on a ByteDance Covered Application (Jun 2023) (Section 102 of Division R of Pub. L. 117-328).
(vii)
(A) 52.204–30, Federal Acquisition Supply Chain Security Act Orders—Prohibition. (Dec 2023) (Pub. L. 115–390, title II).
(B) Alternate I (Dec 2023) of 52.204–30.
(viii) 52.219-8, Utilization of Small Business Concerns (Jan 2025) (15 U.S.C. 637(d)(2) and (3)), in all subcontracts that offer further subcontracting opportunities. If the subcontract (except subcontracts to small business concerns) exceeds the applicable threshold specified in FAR 19.702(a) on the date of subcontract award, the subcontractor must include 52.219-8 in lower tier subcontracts that offer subcontracting opportunities.
(ix) 52.222-21, Prohibition of Segregated Facilities (Apr 2015).
(x) 52.222-26, Equal Opportunity (Sep 2016) (E.O.11246).
(xi) 52.222-35, Equal Opportunity for Veterans (Jun 2020) (38 U.S.C. 4212).
(xii) 52.222-36, Equal Opportunity for Workers with Disabilities (Jun 2020) (29 U.S.C. 793).
(xiii) 52.222-37, Employment Reports on Veterans (Jun 2020) (38 U.S.C. 4212).
(xiv) 52.222-40, Notification of Employee Rights Under the National Labor Relations Act (Dec 2010) (E.O. 13496). Flow down required in accordance with paragraph (f) of FAR clause 52.222-40.
(xv) 52.222-41, Service Contract Labor Standards (Aug 2018) (41 U.S.C. chapter 67).
(xvi)
(A) 52.222-50, Combating Trafficking in Persons (Nov 2021) (22 U.S.C. chapter 78 and E.O 13627).

(B) Alternate I (Mar 2015) of 52.222-50 (22 U.S.C. chapter 78 and E.O. 13627).
(xvii) 52.222-51, Exemption from Application of the Service Contract Labor Standards to Contracts for Maintenance, Calibration, or Repair of Certain Equipment-Requirements (May 2014) (41 U.S.C. chapter 67).
(xviii) 52.222-53, Exemption from Application of the Service Contract Labor Standards to Contracts for Certain Services-Requirements (May 2014) (41 U.S.C. chapter 67).
(xix) 52.222-54, Employment Eligibility Verification (Jan 2025) (E.O. 12989).
(xx) 52.222-55, Minimum Wages for Contractor Workers Under Executive Order 14026 (Jan 2022).
(xxi) 52.222-62, Paid Sick Leave Under Executive Order 13706 (Jan 2022) (E.O. 13706).
(xxii)
(A) 52.224-3, Privacy Training (Jan 2017) (5 U.S.C. 552a).
(B) Alternate I (Jan 2017) of 52.224-3.
(xxiii) 52.225-26, Contractors Performing Private Security Functions Outside the United States (Oct 2016) (Section 862, as amended, of the National Defense Authorization Act for Fiscal Year 2008; 10 U.S.C. Subtitle A, Part V, Subpart G Note).
(xxiv) 52.226-6, Promoting Excess Food Donation to Nonprofit Organizations (Jun 2020) (42 U.S.C. 1792). Flow down required in accordance with paragraph (e) of FAR clause 52.226-6.
(xxv) 52.232-40, Providing Accelerated Payments to Small Business Subcontractors (Mar 2023) (31 U.S.C. 3903 and 10 U.S.C. 3801). Flow down required in accordance with paragraph (c) of 52.232-40.
(xxvi) 52.240-1, Prohibition on Unmanned Aircraft Systems Manufactured or Assembled by American Security Drone Act-Covered Foreign Entities (Nov 2024) (Sections 1821-1826, Pub. L. 118-31, 41 U.S.C. 3901 note prec.).
(xxvii) 52.247-64, Preference for Privately Owned U.S.-Flag Commercial Vessels (Nov 2021) (46 U.S.C. 55305 and 10 U.S.C. 2631). Flow down required in accordance with paragraph (d) of FAR clause 52.247-64.
(2) While not required, the Contractor may include in its subcontracts for commercial products and commercial services a minimal number of additional clauses necessary to satisfy its contractual obligations.

(End of clause)

ADD THE FOLLOWING CLAUSE IN FULL TEXT:

52.229-12 TAX ON CERTAIN FOREIGN PROCUREMENTS—NOTICE AND REPRESENTATION (FEB 2021)

(a) *Definitions.* As used in this clause—

Foreign person means any person other than a United States person.

United States person, as defined in 26 U.S.C. 7701(a)(30), means–

(1) A citizen or resident of the United States;

(2) A domestic partnership;

(3) A domestic corporation;

(4) Any estate (other than a foreign estate, within the meaning of 26 U.S.C. 7701(a)(31)); and

(5) Any trust if-

(i) A court within the United States is able to exercise primary supervision over the administration of the trust; and

(ii) One or more United States persons have the authority to control all substantial decisions of the trust.

(b) This clause applies only to foreign persons. It implements 26 U.S.C. 5000C and its implementing regulations at 26 CFR 1.5000C-1 through 1.5000C-7.

(c)

(1) If the Contractor is a foreign person and has only a partial or no exemption to the withholding, the Contractor shall include the Department of the Treasury Internal Revenue Service Form W-14, Certificate of Foreign Contracting Party Receiving Federal Procurement Payments, with each voucher or invoice submitted under this contract throughout the period in which this status is applicable. The excise tax withholding is applied at the payment level, not at the contract level. The Contractor should revise each IRS Form W-14 submission to reflect the exemption (if any) that applies to that particular invoice, such as a different exemption applying. In the absence of a completed IRS Form W-14 accompanying a payment request, the default withholding percentage is 2 percent for the section 5000C withholding for that payment request. Information about IRS Form W-14 and its separate instructions is available via the internet at www.irs.gov/w14.

(2) If the Contractor is a foreign person and has indicated in its offer in the provision 52.229-11, Tax on Certain Foreign Procurements—Notice and Representation, that it is fully exempt from the withholding, and certified the full exemption on the IRS Form W-14, and if that full exemption no longer applies due to a change in circumstances during the performance of the contract that causes the Contractor to become subject to the withholding for the 2 percent excise tax then the Contractor shall–

(i) Notify the Contracting Officer within 30 days of a change in circumstances that causes the Contractor to be subject to the excise tax withholding under 26 U.S.C. 5000C; and

(ii) Comply with paragraph (c)(1) of this clause.

(d) The Government will withhold a full 2 percent of each payment unless the Contractor claims an exemption. If the Contractor enters a ratio in Line 12 of the IRS Form W-14, the result

of Line 11 divided by Line 10, the Government will withhold from each payment an amount equal to 2 percent multiplied by the contract ratio. If the Contractor marks box 9 of the IRS Form W-14 (rather than completes Lines 10 through 12), the Contractor must identify and enter the specific exempt and nonexempt amounts in Line 15 of the IRS Form W-14; the Government will then withhold 2 percent only from the nonexempt amount. See the IRS Form W-14 and its instructions.

(e) Exemptions from the withholding under this clause are described at 26 CFR 1.5000C-1(d)(5) through (7). Any exemption claimed and self-certified on the IRS Form W-14 is subject to audit by the IRS. Any disputes regarding the imposition and collection of the 26 U.S.C. 5000C tax are adjudicated by the IRS as the 26 U.S.C. 5000C tax is a tax matter, not a contract issue.

(f) Taxes imposed under 26 U.S.C. 5000C may not be—

(1) Included in the contract price; nor

(2) Reimbursed.

(g) A taxpayer may, for a fee, seek advice from the Internal Revenue Service (IRS) as to the proper tax treatment of a transaction. This is called a private letter ruling. Also, the IRS may publish a revenue ruling, which is an official interpretation by the IRS of the Internal Revenue Code, related statutes, tax treaties, and regulations. A revenue ruling is the conclusion of the IRS on how the law is applied to a specific set of facts. For questions relating to the interpretation of the IRS regulations go to https://www.irs.gov/help/tax-law-questions.

(End of clause)

ADDENDUM TO CONTRACT CLAUSES
FAR AND DOSAR CLAUSES NOT PRESCRIBED IN PART 12

52.252-2 CLAUSES INCORPORATED BY REFERENCE (FEB 1998)

This contract incorporates one or more clauses by reference, with the same force and effect as if they were given in full text. Upon request, the Contracting Officer will make their full text available. In addition, the full text of a clause may be accessed electronically at: Acquisition.gov this address is subject to change.

If the Federal Acquisition Regulation (FAR) is not available at the location indicated above, use the Department of State Acquisition website at e-CFR to see the links to the FAR. You may also use an Internet "search engine" (for example, Google, Yahoo or Excite) to obtain the latest location of the most current FAR.

THE FOLLOWING FEDERAL ACQUISITION REGULATIONS (FAR) CLAUSES ARE INCORPORATED BY REFERENCE:

CLAUSE	TITLE AND DATE
52.203-17	CONTRACTOR EMPLOYEE WHISTLEBLOWER RIGHTS (NOV 2023)
52.204-9	PERSONAL IDENTITY VERIFICATION OF CONTRACTOR PERSONNEL (JAN 2011)
52.204-13	SYSTEM FOR AWARD MANAGEMENT MAINTENANCE (OCT 2018)
52.204-18	COMMERCIAL AND GOVERNMENT ENTITY CODE MAINTENANCE (AUG 2020)
52.204-19	INCORPORATION BY REFERENCE OF REPRESENTATIONS AND CERTIFICATIONS (DEC 2014)
52.204-25	PROHIBITION ON CONTRACTING FOR CERTAIN TELECOMMUNICATIONS AND VIDEO SURVEILLANCE SERVICES OR EQUIPMENT (NOV 2021)
52.204-27	PROHIBITION ON A BYTEDANCE COVERED APPLICATION (JUN 2023)
52.222-19	CHILD LABOR-COOPERATION WITH AUTHORITIES AND REMEDIES (JAN 2025)
52.225-14	INCONSISTENCY BETWEEN ENGLISH VERSION AND TRANSLATION OF CONTRACT (FEB 2000)

52.228-3 WORKERS' COMPENSATION INSURANCE (DEFENSE BASE ACT) (JUL 2014)

52.228-4 WORKER'S COMPENSATION AND WAR-HAZARD INSURANCE OVERSEAS (APRIL 1984)

52.228-5 INSURANCE - WORK ON A GOVERNMENT INSTALLATION (JAN 1997)

52.229-6 TAXES - FOREIGN FIXED PRICE CONTRACTS (FEB 2013)

52.232-39 UNENFORCEABILITY OF UNAUTHORIZED OBLIGATIONS (JUNE 2013)

52.232-40 PROVIDING ACCELERATED PAYMENTS TO SMALL BUSINESS SUBCONTRACTORS (MAR 2023)

52.244-6 SUBCONTRACTS FOR COMMERCIAL PRODUCTS AND COMMERCIAL SERVICES (JAN 2025)

THE FOLLOWING FAR CLAUSES ARE PROVIDED IN FULL TEXT:

52.232-19 AVAILABILITY OF FUNDS FOR THE NEXT FISCAL YEAR (APR 1984)

Funds are not presently available for performance under this contract beyond September 30 of the current calendar year. The Government's obligation for performance of this contract beyond that date is contingent upon the availability of appropriated funds from which payment for contract purposes can be made. No legal liability on the part of the Government for any payment may arise for performance under this contract beyond September 30 of the current calendar year, until funds are made available to the Contracting Officer for performance and until the Contractor receives notice of availability, to be confirmed in writing by the Contracting Officer.

(End of clause)

THE FOLLOWING DOSAR CLAUSES ARE PROVIDED IN FULL TEXT:

CONTRACTOR IDENTIFICATION (JULY 2008)

Contract performance may require contractor personnel to attend meetings with government personnel and the public, work within government offices, and/or utilize government email.

Contractor personnel must take the following actions to identify themselves as non-federal employees:

1) Use an email signature block that shows name, the office being supported and company affiliation (e.g. "John Smith, Office of Human Resources, ACME Corporation Support Contractor");

2) Clearly identify themselves and their contractor affiliation in meetings;

3) Identify their contractor affiliation in Departmental e-mail and phone listings whenever contractor personnel are included in those listings; and

4) Contractor personnel may not utilize Department of State logos or indicia on business cards.

(End of clause)

652.215-70 EXAMINATION OF RECORDS

(a) With respect to matters related to this contract or a subcontract hereunder, the Department of State Office of the Inspector General, or an authorized representative, shall have upon request: (1) Complete, prompt, and free access to all Contractor and Subcontractor files (in any format), documents, records, data, premises, and employees, except as limited by law; and

(2) The right to interview any current Contractor and Subcontractor personnel, individually and directly, with respect to such matters.

(b) This clause may not be construed to require the contractor or any subcontractor to create or maintain any record that the contractor or subcontractor does not maintain in the ordinary course of business or pursuant to a provision of law.

(c) The Contractor shall insert a clause containing all the terms of this clause, including this paragraph (c), in all subcontracts under this contract other than acquisitions described in Federal Acquisition Regulation 15.209(b)(1).

652.225-71 SECTION 8(A) OF THE EXPORT ADMINISTRATION ACT OF 1979, AS AMENDED (AUG 1999)

(a) Section 8(a) of the U.S. Export Administration Act of 1979, as amended (50 U.S.C. 2407(a)), prohibits compliance by U.S. persons with any boycott fostered by a foreign country against a country which is friendly to the United States and which is not itself the object of any form of boycott pursuant to United States law or regulation. The Boycott of Israel by Arab League countries is such a boycott, and therefore, the following actions, if taken with intent to comply with, further, or support the Arab League Boycott of Israel, are prohibited activities under the Export Administration Act:

(1) Refusing, or requiring any U.S. person to refuse to do business with or in Israel, with any Israeli business concern, or with any national or resident of Israel, or with any other person, pursuant to an agreement of, or a request from or on behalf of a boycotting country;

(2) Refusing, or requiring any U.S. person to refuse to employ or otherwise discriminating against any person on the basis of race, religion, sex, or national origin of that person or of any owner, officer, director, or employee of such person;

(3) Furnishing information with respect to the race, religion, or national origin of any U.S. person or of any owner, officer, director, or employee of such U.S. person;

(4) Furnishing information about whether any person has, has had, or proposes to have any business relationship (including a relationship by way of sale, purchase, legal or commercial representation, shipping or other transport, insurance, investment, or supply) with or in the State of Israel, with any business concern organized under the laws of the State of Israel, with any Israeli national or resident, or with any person which is known or believed to be restricted from having any business relationship with or in Israel;

(5) Furnishing information about whether any person is a member of, has made contributions to, or is otherwise associated with or involved in the activities of any charitable or fraternal organization which supports the State of Israel; and,

(6) Paying, honoring, confirming, or otherwise implementing a letter of credit which contains any condition or requirement against doing business with the State of Israel.

(b) Under Section 8(a), the following types of activities are not forbidden ``compliance with the boycott," and are therefore exempted from Section 8(a)'s prohibitions listed in paragraphs (a)(1)-(6) above:

(1) Complying or agreeing to comply with requirements:

(i) Prohibiting the import of goods or services from Israel or goods produced or services provided by any business concern organized under the laws of Israel or by nationals or residents of Israel; or,

(ii) Prohibiting the shipment of goods to Israel on a carrier of Israel, or by a route other than that prescribed by the boycotting country or the recipient of the shipment;

(2) Complying or agreeing to comply with import and shipping document requirements with respect to the country of origin, the name of the carrier and route of shipment, the name of the supplier of the shipment or the name of the provider of other services, except that no information knowingly furnished or conveyed in response to such requirements may be stated in negative, blacklisting, or similar exclusionary terms, other than with respect to carriers or route of shipments as may be permitted by such regulations in order to comply with precautionary requirements protecting against war risks and confiscation;

(3) Complying or agreeing to comply in the normal course of business with the unilateral and specific selection by a boycotting country, or national or resident thereof, of carriers, insurance, suppliers of services to be performed within the boycotting country or specific goods which, in the normal course of business, are identifiable by source when

imported into the boycotting country;

(4) Complying or agreeing to comply with the export requirements of the boycotting country relating to shipments or transshipments of exports to Israel, to any business concern of or organized under the laws of Israel, or to any national or resident of Israel;

(5) Compliance by an individual or agreement by an individual to comply with the immigration or passport requirements of any country with respect to such individual or any member of such individual's family or with requests for information regarding requirements of employment of such individual within the boycotting country; and,

(6) Compliance by a U.S. person resident in a foreign country or agreement by such person to comply with the laws of that country with respect to his or her activities exclusively therein, and such regulations may contain exceptions for such resident complying with the laws or regulations of that foreign country governing imports into such country of trademarked, trade named, or similarly specifically identifiable products, or components of products for his or her own use, including the performance of contractual services within that country, as may be defined by such regulations.

(End of clause)

652.229-70 EXCISE TAX EXEMPTION STATEMENT FOR CONTRACTORS WITHIN THE UNITED STATES (JUL 1988)

This is to certify that the item(s) covered by this contract is/are for export solely for the use of the U.S. Foreign Service Post identified in the contract schedule.

The Contractor shall use a photocopy of this contract as evidence of intent to export. Final proof of exportation may be obtained from the agent handling the shipment. Such proof shall be accepted in lieu of payment of excise tax.

(End of clause)

652.232-70 PAYMENT SCHEDULE AND INVOICE SUBMISSION (FIXED-PRICE) (AUG 1999)

(a) General. The Government shall pay the Contractor as full compensation for all work required, performed, and accepted under this contract the firm fixed-price stated in this contract.

(b) Invoice Submission. The Contractor shall submit invoices in an original and copies copies to the U.S. Billing Office. To constitute a proper invoice, the invoice shall include all the items required by FAR 32.905(e).

(c) Contractor Remittance Address. The Government will make payment to the contractor's address stated on the cover page of this contract, unless a separate remittance address is shown below:

_____

_____

_____

(End of clause)

652.237-72 OBSERVANCE OF LEGAL HOLIDAYS AND ADMINISTRATIVE LEAVE (FEB 2015)

(a) The Department of State observes the following days as holidays for calendar year 2026:

January 1	New Year's Day	American Holiday
January 19	Martin Luther King, Jr's Birthday	American Holiday
February 16	Presidents' Day	American Holiday
April 13, 14, 15	Songkran Festival	Thai Holiday
May 4	Coronation Day	Thai Holiday
May 25	Memorial Day	American Holiday
June 3	H.M. Queen Suthida Bajrasudhabimalalakshana's Birthday	Thai Holiday
June 19	Juneteenth National Independence Day	American
July 3	Independence Day (Observed)	American Holiday
July 28	H.M. King Maha Vajiralongkorn Phra Vajiraklaochaoyuhua's Birthday	Thai Holiday
August 12	H.M. Queen Sirikit's Birthday	Thai Holiday
September 17	Labor Day	American Holiday
October 12	Columbus Day	American Holiday
October 23	Chulalongkorn Day	Thai Holiday
November 11	Veterans' Day	American Holiday
November 26	Thanksgiving Day	American Holiday
December 7	Substitution for H.M. late King Bhumibol Adulyadej's Birthday	Thai Holiday
December 25	Christmas Day	American Holiday
December 31	New Year's Eve	Thai Holiday

Any other day designated by Federal law, Executive Order, or Presidential Proclamation.

(b) When New Year's Day, Independence Day, Veterans Day or Christmas Day falls on a Sunday, the following Monday is observed; if it falls on Saturday the preceding Friday is observed. Observance of such days by Government personnel shall not be cause for additional period of performance or entitlement to compensation except as set forth in the contract. If the contractor's personnel work on a holiday, no form of holiday or other premium compensation will be reimbursed either as a direct or indirect cost, unless authorized pursuant to an overtime clause elsewhere in this contract.

(c) When the Department of State grants administrative leave to its Government employees, assigned contractor personnel in Government facilities shall also be dismissed. However, the contractor agrees to continue to provide sufficient personnel to perform round-the-clock requirements of critical tasks already in operation or scheduled, and shall be guided by the instructions issued by the contracting officer or his/her duly authorized representative.

(d) For fixed-price contracts, if services are not required or provided because the building is closed due to inclement weather, unanticipated holidays declared by the President, failure of Congress to appropriate funds, or similar reasons, deductions will be computed as follows:

(1) The deduction rate in dollars per day will be equal to the per month contract price divided by 21 days per month.

(2) The deduction rate in dollars per day will be multiplied by the number of days services are not required or provided.

If services are provided for portions of days, appropriate adjustment will be made by the contracting officer to ensure that the contractor is compensated for services provided.

(e) If administrative leave is granted to contractor personnel as a result of conditions stipulated in any "Excusable Delays" clause of this contract, it will be without loss to the contractor. The cost of salaries and wages to the contractor for the period of any such excused absence shall be a reimbursable item of direct cost hereunder for employees whose regular time is normally charged, and a reimbursable item of indirect cost for employees whose time is normally charged indirectly in accordance with the contractors accounting policy.

(End of clause)

652.242-70 CONTRACTING OFFICER'S REPRESENTATIVE (COR) AUG 1999)

(a) The Contracting Officer may designate in writing one or more Government employees, by name or position title, to take action for the Contracting Officer under this contract. Each designee shall be identified as a Contracting Officer's Representative (COR). Such designation(s) shall specify the scope and limitations of the authority so delegated; provided, that the designee shall not change the terms or conditions of the contract, unless the COR is a warranted Contracting Officer and this authority is delegated in the designation.

(b) The COR for this contract is ILEA Bangkok Chief of Information Technology.

(End of clause)

652.242-73 AUTHORIZATION AND PERFORMANCE (AUG 1999)

(a) The Contractor warrants the following:

(1) That is has obtained authorization to operate and do business in the country or countries in which this contract will be performed;

(2) That is has obtained all necessary licenses and permits required to perform this contract; and,

(3) That it shall comply fully with all laws, decrees, labor standards, and regulations of said country or countries during the performance of this contract.

(b) If the party actually performing the work will be a subcontractor or joint venture partner, then such subcontractor or joint venture partner agrees to the requirements of paragraph (a) of this clause.

652.243-70 NOTICES (AUG 1999)

Any notice or request relating to this contract given by either party to the other shall be in writing. Said notice or request shall be mailed or delivered by hand to the other party at the address provided in the schedule of the contract. All modifications to the contract must be made in writing by the Contracting Officer.

SECTION 3 - SOLICITATION PROVISIONS

52.212-1 INSTRUCTIONS TO OFFERORS -- COMMERCIAL PRODUCTS AND COMMERCIAL SERVICES (SEP 2023) IS INCORPORATED BY REFERENCE (SEE SF-1449, BLOCK 27A)

ADDENDUM TO 52.212-1

A. Summary of Instructions. Each offer must consist of the following:

1. A completed solicitation, in which the SF-1449 cover page (blocks 12, 17, 19-24, and 30 as appropriate), and Section 1 has been filled out.

2. **CONTRACTOR REQUIREMENTS**:

2.1) The Contractor shall have been engaged in the audiovisual or interpretation solutions business for no less than five (5) years.
– Proof of documentation shall be provided.

2.2) The Contractor must be an authorized distributor or partner with the Original Equipment Manufacturer (OEM) for the core product.
– Proof of documentation shall be provided.

2.3) The Contractor must have worked and experienced in a deploying and configuring prior experience deploying and configuring complex audiovisual or interpreting equipment, with a project value of no less than $250,000
– Proof of documentation shall be provided.

2.4) The Contractor's engineer(s) or subcontractor(s) shall be certified by the OEM to install and configure the core product.
– Proof of documentation shall be provided.

2.5) **The Contractor shall complete the project, including delivering all good(s) and services(s) within 120 days of contract award and shall submit a project management plan and schedu**le demonstrating the ability to complete the work as stated in this SOW.
– Documentation shall be provided.

3. The offeror shall provide proof of SAM registration to include the SAM UEI number.

4. If you use a subcontractor:
   - Please submit documentation (Item 2.1 through 2.5) to verify the subcontractors's qualifications.

ADDENDUM TO SOLICITATION PROVISIONS
FAR AND DOSAR PROVISIONS NOT PRESCRIBED IN PART 12

52.252-1 SOLICITATION PROVISIONS INCORPORATED BY REFERENCE (FEB 1998)

This solicitation incorporates one or more solicitation provisions by reference, with the same force and effect as if they were given in full text. Upon request, the Contracting Officer will make their full text available. In addition, the full text of a clause may be accessed electronically at Acquisition.gov this address is subject to change.

If the Federal Acquisition Regulation (FAR) is not available at the location indicated above, use the Department of State Acquisition website at e-CFR to see the links to the FAR. You may also use an Internet "search engine" (for example, Google, Yahoo or Excite) to obtain the latest location of the most current FAR.

THE FOLLOWING FEDERAL ACQUISITION REGULATION SOLICITATION PROVISIONS ARE INCORPORATED BY REFERENCE:

PROVISION TITLE AND DATE

52.204-7 SYSTEM FOR AWARD MANAGEMENT (NOV 2024)

52.204-16 COMMERCIAL AND GOVERNMENT ENTITY CODE REPORTING (AUG 2020)

52.211-1 AVAILABILITY OF SPECIFICATIONS LISTED IN THE GSA INDEX OF FEDERAL SPECIFICATIONS, STANDARDS AND COMMERCIAL ITEM DESCRIPTIONS, FPMR PART 101-29 (SEP 2023)

52.212-1 INSTRUCTIONS TO OFFERORS -- COMMERCIAL PRODUCTS AND COMMERCIAL SERVICES (SEP 2023)

52.214-34 SUBMISSION OF OFFERS IN THE ENGLISH LANGUAGE (APR 1991)

52.222-56 CERTIFICATION REGARDING TRAFFICKING IN PERSONS (OCT 2020)

52.237-1 SITE VISIT (APR 1984)

The site visit will be held on August 11, 2026 (date) at 10:30 AM (local time) at ILEA (location). Prospective offerors/quoters should contact soontare@state.gov for additional information or to arrange entry to the building.

THE FOLLOWING DOSAR PROVISION(S) IS/ARE PROVIDED IN FULL TEXT:

652.206-70 ADVOCATE FOR COMPETITION/OMBUDSMAN (FEB 2015)

(a) The Department of State's Advocate for Competition is responsible for assisting industry in removing restrictive requirements from Department of State solicitations and removing barriers to full and open competition and use of commercial items. If such a solicitation is considered competitively restrictive or does not appear properly conducive to competition and commercial practices, potential offerors are encouraged first to contact the contracting office for the solicitation. If concerns remain unresolved, contact:

(1) For solicitations issued by the Office of Acquisition Management (A/GA/AMD) or a Regional Procurement Support Office, the A/GA/AMD Advocate for Competition, at AQMCompetitionAdvocate@state.gov.

(2) For all others, the Department of State Advocate for Competition at cat@state.gov.

(b) The Department of State's Acquisition Ombudsman has been appointed to hear concerns from potential offerors and contractors during the pre-award and post-award phases of this acquisition. The role of the ombudsman is not to diminish the authority of the contracting officer, the Technical Evaluation Panel or Source Evaluation Board, or the selection official. The purpose of the ombudsman is to facilitate the communication of concerns, issues, disagreements, and recommendations of interested parties to the appropriate Government personnel, and work to resolve them. When requested and appropriate, the ombudsman will maintain strict confidentiality as to the source of the concern. The ombudsman does not participate in the evaluation of proposals, the source selection process, or the adjudication of formal contract disputes. Interested parties are invited to contact the contracting activity ombudsman, Management Counsellor, U.S. Embassy Bangkok; Tel: (02)205-4000. For an American Embassy or overseas post, refer to the numbers below for the Department Acquisition Ombudsman. Concerns, issues, disagreements, and recommendations which cannot be resolved at a contracting activity level may be referred to the Department of State Acquisition Ombudsman at (703) 516-1696 or write to: Department of State, Acquisition Ombudsman, Office of Global Acquisitions (A/GA), Suite 1060, SA-15, Washington, DC 20520.
(End of provision)

SECTION 4 - EVALUATION FACTORS

- Award will be made to the lowest priced, acceptable, responsible offeror. The quoter shall submit a completed solicitation, including Sections 1 and 5.

- The Government reserves the right to reject proposals that are unreasonably low or high in price.

- The lowest price will be determined by multiplying the offered prices times the estimated quantities in "Prices - Continuation of SF-1449, block 23", and arriving at a grand total, including all options.

- The Government will determine acceptability by assessing the offeror's compliance with the terms of the RFQ **to include the technical information required by Section 3.**

- The Government will determine contractor responsibility by analyzing whether the apparent successful offeror complies with the requirements of FAR 9.1, including:

  Adequate financial resources or the ability to obtain them;
  Ability to comply with the required performance period, taking into consideration all existing commercial and governmental business commitments;
  Satisfactory record of integrity and business ethics;
  Necessary organization, experience, and skills or the ability to obtain them;
  Necessary equipment and facilities or the ability to obtain them; and
  Be otherwise qualified and eligible to receive an award under applicable laws and regulations.

ADDENDUM TO EVALUATION FACTORS
FAR AND DOSAR PROVISION(S) NOT PRESCRIBED IN PART 12

THE FOLLOWING FAR PROVISION(S) IS/ARE PROVIDED IN FULL TEXT:

52.217-5 EVALUATION OF OPTIONS (JUL 1990)

The Government will evaluate offers for award purposes by adding the total price for all options to the total price for the basic requirement. Evaluation of options will not obligate the Government to exercise the option(s).

52.225-17 EVALUATION OF FOREIGN CURRENCY OFFERS (FEB 2000)

If the Government receives offers in more than one currency, the Government will evaluate offers by converting the foreign currency to United States currency using the exchange rate used by the Embassy in effect as follows:

(a) For acquisitions conducted using sealed bidding procedures, on the date of bid opening.

(b) For acquisitions conducted using negotiation procedures—

(1) On the date specified for receipt of offers, if award is based on initial offers; otherwise

(2) On the date specified for receipt of proposal revisions.

SECTION 5 - REPRESENTATIONS AND CERTIFICATIONS

52.204-24 REPRESENTATION REGARDING CERTAIN TELECOMMUNICATIONS AND VIDEO SURVEILLANCE SERVICES OR EQUIPMENT (NOV 2021)

The Offeror shall not complete the representation at paragraph (d)(1) of this provision if the Offeror has represented that it "does not provide covered telecommunications equipment or services as a part of its offered products or services to the Government in the performance of any contract, subcontract, or other contractual instrument" in paragraph (c)(1) in the provision at 52.204-26, Covered Telecommunications Equipment or Services—Representation, or in paragraph (v)(2)(i) of the provision at 52.212-3, Offeror Representations and Certifications-Commercial Products or Commercial Services. The Offeror shall not complete the representation in paragraph (d)(2) of this provision if the Offeror has represented that it "does not use covered telecommunications equipment or services, or any equipment, system, or service that uses covered telecommunications equipment or services" in paragraph (c)(2) of the provision at 52.204-26, or in paragraph (v)(2)(ii) of the provision at 52.212-3.

(a) *Definitions.* As used in this provision—

Backhaul, covered telecommunications equipment or services, critical technology, interconnection arrangements, reasonable inquiry, roaming, and substantial or essential component have the meanings provided in the clause 52.204-25, Prohibition on Contracting for Certain Telecommunications and Video Surveillance Services or Equipment.

(b) *Prohibition*.

(1) Section 889(a)(1)(A) of the John S. McCain National Defense Authorization Act for Fiscal Year 2019 (Pub. L. 115-232) prohibits the head of an executive agency on or after August 13, 2019, from procuring or obtaining, or extending or renewing a contract to procure or obtain, any equipment, system, or service that uses covered telecommunications equipment or services as a substantial or essential component of any system, or as critical technology as part of any system. Nothing in the prohibition shall be construed to—

(i) Prohibit the head of an executive agency from procuring with an entity to provide a service that connects to the facilities of a third-party, such as backhaul, roaming, or interconnection arrangements; or

(ii) Cover telecommunications equipment that cannot route or redirect user data traffic or cannot permit visibility into any user data or packets that such equipment transmits or otherwise handles.

(2) Section 889(a)(1)(B) of the John S. McCain National Defense Authorization Act for Fiscal Year 2019 (Pub. L. 115-232) prohibits the head of an executive agency on or after August 13, 2020, from entering into a contract or extending or renewing a contract with an entity that uses any equipment, system, or service that uses covered telecommunications equipment or services

as a substantial or essential component of any system, or as critical technology as part of any system. This prohibition applies to the use of covered telecommunications equipment or services, regardless of whether that use is in performance of work under a Federal contract. Nothing in the prohibition shall be construed to—

(i) Prohibit the head of an executive agency from procuring with an entity to provide a service that connects to the facilities of a third-party, such as backhaul, roaming, or interconnection arrangements; or
(ii) Cover telecommunications equipment that cannot route or redirect user data traffic or cannot permit visibility into any user data or packets that such equipment transmits or otherwise handles.

(c) *Procedures.* The Offeror shall review the list of excluded parties in the System for Award Management (SAM) (https://www.sam.gov) for entities excluded from receiving federal awards for "covered telecommunications equipment or services".

(d) *Representation.* The Offeror represents that—

(1) It □ will, □ will not provide covered telecommunications equipment or services to the Government in the performance of any contract, subcontract or other contractual instrument resulting from this solicitation. The Offeror shall provide the additional disclosure information required at paragraph (e)(1) of this section if the Offeror responds "will" in paragraph (d)(1) of this section; and

(2) After conducting a reasonable inquiry, for purposes of this representation, the Offeror represents that—

It □ does, □ does not use covered telecommunications equipment or services, or use any equipment, system, or service that uses covered telecommunications equipment or services. The Offeror shall provide the additional disclosure information required at paragraph (e)(2) of this section if the Offeror responds "does" in paragraph (d)(2) of this section.

(e) *Disclosures.*
(1) Disclosure for the representation in paragraph (d)(1) of this provision. If the Offeror has responded "will" in the representation in paragraph (d)(1) of this provision, the Offeror shall provide the following information as part of the offer:

(i) For covered equipment—

(A) The entity that produced the covered telecommunications equipment (include entity name, unique entity identifier, CAGE code, and whether the entity was the original equipment manufacturer (OEM) or a distributor, if known);

(B) A description of all covered telecommunications equipment offered (include brand; model number, such as OEM number, manufacturer part number, or wholesaler number; and item description, as applicable); and

(C) Explanation of the proposed use of covered telecommunications equipment and any factors relevant to determining if such use would be permissible under the prohibition in paragraph (b)(1) of this provision.

(ii) For covered services—

(A) If the service is related to item maintenance: A description of all covered telecommunications services offered (include on the item being maintained: Brand; model number, such as OEM number, manufacturer part number, or wholesaler number; and item description, as applicable); or

(B) If not associated with maintenance, the Product Service Code (PSC) of the service being provided; and explanation of the proposed use of covered telecommunications services and any factors relevant to determining if such use would be permissible under the prohibition in paragraph (b)(1) of this provision.
(2) Disclosure for the representation in paragraph (d)(2) of this provision. If the Offeror has responded "does" in the representation in paragraph (d)(2) of this provision,
the Offeror shall provide the following information as part of the offer:

(i) For covered equipment—

(A) The entity that produced the covered telecommunications equipment (include entity name, unique entity identifier, CAGE code, and whether the entity was the OEM or a distributor, if known);

(B) A description of all covered telecommunications equipment offered (include brand; model number, such as OEM number, manufacturer part number, or wholesaler number; and item description, as applicable); and

(C) Explanation of the proposed use of covered telecommunications equipment and any factors relevant to determining if such use would be permissible under the prohibition in paragraph (b)(2) of this provision.

(ii) For covered services—

(A) If the service is related to item maintenance: A description of all covered telecommunications services offered (include on the item being maintained: Brand; model number, such as OEM number, manufacturer part number, or wholesaler number; and item description, as applicable); or

(B) If not associated with maintenance, the PSC of the service being provided; and explanation of the proposed use of covered telecommunications services and any factors relevant to determining if such use would be permissible under the prohibition in paragraph (b)(2) of this provision.
(End of provision)

52.204-26 COVERED TELECOMMUNICATIONS EQUIPMENT OR SERVICES REPRESENTATION (OCT 2020)

(a) *Definitions.* As used in this provision, "covered telecommunications equipment or services" and "reasonable inquiry" have the meaning provided in the clause 52.204-25, Prohibition on Contracting for Certain Telecommunications and Video Surveillance Services or Equipment.

(b) *Procedures.* The Offeror shall review the list of excluded parties in the System for Award Management (SAM) (*https://www.sam.gov*) for entities excluded from receiving federal awards for "covered telecommunications equipment or services".

(c) *Representations.* (1) The Offeror represents that it [ ] does, [ ] does not provide covered telecommunications equipment or services as a part of its offered products or services to the Government in the performance of any contract, subcontract, or other contractual instrument.

(2) After conducting a reasonable inquiry for purposes of this representation, the Offeror represents that it [ ] does, [ ] does not use covered telecommunications equipment or services, or any equipment, system, or service that uses covered telecommunications equipment or services.

(End of provision)

52.212-3 OFFEROR REPRESENTATIONS AND CERTIFICATIONS—COMMERCIAL PRODUCTS AND COMMERCIAL SERVICES (MAY 2024)

The Offeror shall complete only paragraph (b) of this provision if the Offeror has completed the annual representations and certification electronically in the System for Award Management (SAM) accessed through https://www.sam.gov. If the Offeror has not completed the annual representations and certifications electronically, the Offeror shall complete only paragraphs (c) through (v) of this provision.

(a) *Definitions*. As used in this provision—

Covered telecommunications equipment or services has the meaning provided in the clause 52.204-25, Prohibition on Contracting for Certain Telecommunications and Video Surveillance Services or Equipment.

Economically disadvantaged women-owned small business (EDWOSB) concern means a small business concern that is at least 51 percent directly and unconditionally owned by, and the management and daily business operations of which are controlled by, one or more women who are citizens of the United States and who are economically disadvantaged in accordance with 13 CFR part 127, and the concern is certified by SBA or an approved third-party certifier in accordance with 13 CFR 127.300. It automatically qualifies as a women-owned small business eligible under the WOSB Program.

Forced or indentured child labor means all work or service—

(1) Exacted from any person under the age of 18 under the menace of any penalty for its nonperformance and for which the worker does not offer himself voluntarily; or

(2) Performed by any person under the age of 18 pursuant to a contract the enforcement of which can be accomplished by process or penalties.
Highest-level owner means the entity that owns or controls an immediate owner of the offeror, or that owns or controls one or more entities that control an immediate owner of the offeror. No entity owns or exercises control of the highest level owner.
Immediate owner means an entity, other than the offeror, that has direct control of the offeror. Indicators of control include, but are not limited to, one or more of the following: ownership or interlocking management, identity of interests among family members, shared facilities and equipment, and the common use of employees.
Inverted domestic corporation, means a foreign incorporated entity that meets the definition of an inverted domestic corporation under 6 U.S.C. 395(b), applied in accordance with the rules and definitions of 6 U.S.C. 395(c).
Manufactured end product means any end product in product and service codes (PSCs) 1000-9999, except—
(1) PSC 5510, Lumber and Related Basic Wood Materials;
(2) Product or Service Group (PSG) 87, Agricultural Supplies;
(3) PSG 88, Live Animals;
(4) PSG 89, Subsistence;
(5) PSC 9410, Crude Grades of Plant Materials;
(6) PSC 9430, Miscellaneous Crude Animal Products, Inedible;
(7) PSC 9440, Miscellaneous Crude Agricultural and Forestry Products;
(8) PSC 9610, Ores;
(9) PSC 9620, Minerals, Natural and Synthetic; and
(10) PSC 9630, Additive Metal Materials.
Place of manufacture means the place where an end product is assembled out of components, or otherwise made or processed from raw materials into the finished product that is to be provided to the Government. If a product is disassembled and reassembled, the place of reassembly is not the place of manufacture.
Predecessor means an entity that is replaced by a successor and includes any predecessors of the predecessor.
Reasonable inquiry has the meaning provided in the clause 52.204-25, Prohibition on Contracting for Certain Telecommunications and Video Surveillance Services or Equipment.
Restricted business operations means business operations in Sudan that include power production activities, mineral extraction activities, oil-related activities, or the production of military equipment, as those terms are defined in the Sudan Accountability and Divestment Act of 2007 (Pub. L. 110-174). Restricted business operations do not include business operations that the person (as that term is defined in Section 2 of the Sudan Accountability and Divestment Act of 2007) conducting the business can demonstrate—
(1) Are conducted under contract directly and exclusively with the regional government of southern Sudan;
(2) Are conducted pursuant to specific authorization from the Office of Foreign Assets Control in the Department of the Treasury, or are expressly exempted under Federal law from the requirement to be conducted under such authorization;
(3) Consist of providing goods or services to marginalized populations of Sudan;
(4) Consist of providing goods or services to an internationally recognized peacekeeping force or humanitarian organization;

(5) Consist of providing goods or services that are used only to promote health or education; or
(6) Have been voluntarily suspended."Sensitive technology"—
Sensitive technology—
(1) Means hardware, software, telecommunications equipment, or any other technology that is to be used specifically—
(i) To restrict the free flow of unbiased information in Iran; or
(ii) To disrupt, monitor, or otherwise restrict speech of the people of Iran; and
(2) Does not include information or informational materials the export of which the President does not have the authority to regulate or prohibit pursuant to section 203(b)(3)of the International Emergency Economic Powers Act (50 U.S.C. 1702(b)(3)).
Service-disabled veteran-owned small business (SDVOSB) concern means a small business concern—
(1)
(i) Not less than 51 percent of which is owned and controlled by one or more service-disabled veterans or, in the case of any publicly owned business, not less than 51 percent of the stock of which is owned by one or more service-disabled veterans; and
(ii) The management and daily business operations of which are controlled by one or more service-disabled veterans or, in the case of a service-disabled veteran with permanent and severe disability, the spouse or permanent caregiver of such veteran; or
(2) A small business concern eligible under the SDVOSB Program in accordance with 13 CFR part 128 (see subpart 19.14).
(3) *Service-disabled veteran*, as used in this definition, means a veteran as defined in 38 U.S.C. 101(2), with a disability that is service connected, as defined in 38 U.S.C. 101(16), and who is registered in the Beneficiary Identification and Records Locator Subsystem, or successor system that is maintained by the Department of Veterans Affairs' Veterans Benefits Administration, as a service-disabled veteran.
Service-disabled veteran-owned small business (SDVOSB) concern eligible under the SDVOSB Program means an SDVOSB concern that—
(1) Effective January 1, 2024, is designated in the System for Award Management (SAM) as certified by the Small Business Administration (SBA) in accordance with 13 CFR 128.300; or
(2) Has represented that it is an SDVOSB concern in SAM and submitted a complete application for certification to SBA on or before December 31, 2023.
Service-disabled veteran-owned small business (SDVOSB) Program means a program that authorizes contracting officers to limit competition, including award on a sole-source basis, to SDVOSB concerns eligible under the SDVOSB Program.
Small business concern—
(1) Means a concern, including its affiliates, that is independently owned and operated, not dominant in its field of operation, and qualified as a small business under the criteria in 13 CFR part 121 and size standards in this solicitation.
(2) *Affiliates*, as used in this definition, means business concerns, one of whom directly or indirectly controls or has the power to control the others, or a third party or parties control or have the power to control the others. In determining whether affiliation exists, consideration is given to all appropriate factors including common ownership, common management, and contractual relationships. SBA determines affiliation based on the factors set forth at 13 CFR 121.103.

Small disadvantaged business concern, consistent with 13 CFR 124.1001, means a small business concern under the size standard applicable to the acquisition, that—
(1) Is at least 51 percent unconditionally and directly owned (as defined at 13 CFR 124.105) by—
(i) One or more socially disadvantaged (as defined at13 CFR 124.103) and economically disadvantaged (as defined at 13 CFR 124.104) individuals who are citizens of the United States; and
(ii) Each individual claiming economic disadvantage has a net worth not exceeding the threshold at 13 CFR 124.104(c)(2) after taking into account the applicable exclusions set forth at 13 CFR124.104(c)(2); and
(2) The management and daily business operations of which are controlled (as defined at 13.CFR 124.106) by individuals, who meet the criteria in paragraphs (1)(i) and (ii) of this definition.
Subsidiary means an entity in which more than 50 percent of the entity is owned—
(1) Directly by a parent corporation; or
(2) Through another subsidiary of a parent corporation
Successor means an entity that has replaced a predecessor by acquiring the assets and carrying out the affairs of the predecessor under a new name (often through acquisition or merger). The term "successor" does not include new offices/divisions of the same company or a company that only changes its name. The extent of the responsibility of the successor for the liabilities of the predecessor may vary, depending on State law and specific circumstances.
Veteran-owned small business concern means a small business concern—
(1) Not less than 51 percent of which is owned and controlled by one or more veterans (as defined at 38 U.S.C. 101(2)) or, in the case of any publicly owned business, not less than 51 percent of the stock of which is owned by one or more veterans; and
(2) The management and daily business operations of which are controlled by one or more veterans.
Women-owned business concern means a concern which is at least 51 percent owned by one or more women; or in the case of any publicly owned business, at least 51 percent of its stock is owned by one or more women; and whose management and daily business operations are controlled by one or more women
Women-owned small business concern means a small business concern—
(1) That is at least 51 percent owned by one or more women; or, in the case of any publicly owned business, at least51 percent of the stock of which is owned by one or more women; and
(2) Whose management and daily business operations are controlled by one or more women.
Women-owned small business (WOSB) concern eligible under the WOSB Program (in accordance with 13 CFR part 127), means a small business concern that is at least 51 percent directly and unconditionally owned by, and the management and daily business operations of which are controlled by, one or more women who are citizens of the United States, and the concern is certified by SBA or an approved third-party certifier in accordance with 13 CFR 127.300.
(b)
(1) *Annual Representations and Certifications*. Any changes provided by the Offeror in paragraph (b)(2) of this provision do not automatically change the representations and certifications in SAM.
(2) The offeror has completed the annual representations and certifications electronically in SAM accessed through http://www.sam.gov. After reviewing SAM information, the Offeror verifies by

submission of this offer that the representations and certifications currently posted electronically at FAR 52.212-3, Offeror Representations and Certifications-Commercial Products and Commercial Services, have been entered or updated in the last 12 months, are current, accurate, complete, and applicable to this solicitation (including the business size standard(s) applicable to the NAICS code(s) referenced for this solicitation), at the time this offer is submitted and are incorporated in this offer by reference (see FAR 4.1201), except for paragraphs __.

[*Offeror to identify the applicable paragraphs at (c) through (v) of this provision that the offeror has completed for the purposes of this solicitation only, if any.*
These amended representation(s) and/or certification(s) are also incorporated in this offer and are current, accurate, and complete as of the date of this offer.
Any changes provided by the offeror are applicable to this solicitation only, and do not result in an update to the representations and certifications posted electronically on SAM.]

(c) Offerors must complete the following representations when the resulting contract is for supplies to be delivered or services to be performed in the United States or its outlying areas, or when the contracting officer has applied part 19 in accordance with 19.000(b)(1)(ii). Check all that apply.

(1) *Small business concern*. The offeror represents as part of its offer that—

(i) It □ is, □ is not a small business concern; or

(ii) It □ is, □ is not a small business joint venture that complies with the requirements of 13 CFR 121.103(h) and 13 CFR 125.8(a) and (b). [*The offeror shall enter the name and unique entity identifier of each party to the joint venture:* _____.]

(2) *Veteran-owned small business concern*. [*Complete only if the offeror represented itself as a small business concern in paragraph (c)(1) of this provision*.] The offeror represents as part of its offer that it □ is, □ is not a veteran-owned small business concern.

(3) *SDVOSB concern.* [*Complete only if the offeror represented itself as a veteran-owned small business concern in paragraph (c)(2) of this provision.*] The offeror represents that it □ is, □ is not an SDVOSB concern.

(4) *SDVOSB concern joint venture eligible under the SDVOSB Program*. The offeror represents that it □ is, □ is not an SDVOSB joint venture eligible under the SDVOSB Program that complies with the requirements of 13 CFR 128.402. [*Complete only if the offeror represented itself as an SDVOSB concern in paragraph (c)(3) of this provision.*] [*The offeror shall enter the name and unique entity identifier of each party to the joint venture:* _____.]

(5) *Small disadvantaged business concern. [Complete only if the offeror represented itself as a small business concern in paragraph (c)(1) of this provision.]* The offeror represents that it □ is, □ is not a small disadvantaged business concern as defined in 13 CFR 124.1001.

(6) *Women-owned small business concern*. [*Complete only if the offeror represented itself as a small business concern in paragraph (c)(1) of this provision*.] The offeror represents that it □ is, □ is not a women-owned small business concern.

(7) *WOSB joint venture eligible under the WOSB Program.* The offeror represents that it □ is, □ is not a joint venture that complies with the requirements of 13 CFR 127.506(a) through (c). [*The offeror shall enter the name and unique entity identifier of each party to the joint venture:* _____.]

(8) *Economically disadvantaged women-owned small business (EDWOSB) joint venture.* The offeror represents that it □ is, □ is not a joint venture that complies with the

requirements of 13 CFR 127.506(a) through (c). [*The offeror shall enter the name and unique entity identifier of each party to the joint venture:* _____.]
Note to paragraphs (c)(9) and (10): Complete paragraphs (c)(9) and (10) only if this solicitation is expected to exceed the simplified acquisition threshold.
(9) *Women-owned business concern (other than small business concern*). [*Complete only if the offeror is a women-owned business concern and did not represent itself as a small business concern in paragraph (c)(1) of this provision*.] The offeror represents that it □ is a women-owned business concern.
(10) *Tie bid priority for labor surplus area concerns*. If this is an invitation for bid, small business offerors may identify the labor surplus areas in which costs to be incurred on account of manufacturing or production (by offeror or first-tier subcontractors) amount to more than 50 percent of the contract price:_____
(11) *HUBZone small business concern*. [*Complete only if the offeror represented itself as a small business concern in paragraph (c)(1) of this provision*.] The offeror represents, as part of its offer, that–
(i) It □ is, □ is not a HUBZone small business concern listed, on the date of this representation, as having been certified by SBA as a HUBZone small business concern in the Dynamic Small Business Search and SAM, and will attempt to maintain an employment rate of HUBZone residents of 35 percent of its employees during performance of a HUBZone contract (see 13 CFR 126.200(e)(1)); and
(ii) It □ is, □ is not a HUBZone joint venture that complies with the requirements of 13 CFR 126.616(a) through (c). [*The offeror shall enter the name and unique entity identifier of each party to the joint venture:* _____.] Each HUBZone small business concern participating in the HUBZone joint venture shall provide representation of its HUBZone status.
(d) Representations required to implement provisions of Executive Order11246-

(1) Previous contracts and compliance. The offeror represents that-
(i) It □ has, □ has not participated in a previous contract or subcontract subject to the Equal Opportunity clause of this solicitation; and
(ii) It □ has, □ has not filed all required compliance reports.
(2) *Affirmative Action Compliance*. The offeror represents that-
(i) It □ has developed and has on file, □ has not developed and does not have on file, at each establishment, affirmative action programs required by rules and regulations of the Secretary of Labor (41 CFR parts 60-1 and 60-2), or
(ii) It □ has not previously had contracts subject to the written affirmative action programs requirement of the rules and regulations of the Secretary of Labor.
(e) *Certification Regarding Payments to Influence Federal Transactions (31 http://uscode.house.gov/ U.S.C. 1352)*. (Applies only if the contract is expected to exceed $150,000.) By submission of its offer, the offeror certifies to the best of its knowledge and belief that no Federal appropriated funds have been paid or will be paid to any person for influencing or attempting to influence an officer or employee of any agency, a Member of Congress, an officer or employee of Congress or an employee of a Member of Congress on his or her behalf in connection with the award of any resultant contract. If any registrants under the Lobbying Disclosure Act of 1995 have made a lobbying contact on behalf of the offeror with respect to this contract, the offeror shall complete and submit, with its offer, OMB Standard Form LLL, Disclosure of Lobbying Activities, to provide the name of the registrants. The offeror need not

report regularly employed officers or employees of the offeror to whom payments of reasonable compensation were made.
(f) *Buy American Certificate*. (Applies only if the clause at Federal Acquisition Regulation (FAR) 52.225-1, Buy American-Supplies, is included in this solicitation.)
(1)
(i) The Offeror certifies that each end product, except those listed in paragraph (f)(2) of this provision, is a domestic end product and that each domestic end product listed in paragraph (f)(3) of this provision contains a critical component.
(ii) The Offeror shall list as foreign end products those end products manufactured in the United States that do not qualify as domestic end products. For those foreign end products that do not consist wholly or predominantly of iron or steel or a combination of both, the Offeror shall also indicate whether these foreign end products exceed 55 percent domestic content, except for those that are COTS items. If the percentage of the domestic content is unknown, select “no”.
(iii) The Offeror shall separately list the line item numbers of domestic end products that contain a critical component (see FAR 25.105).
(iv) The terms “commercially available off-the-shelf (COTS) item,” “critical component,” “domestic end product,” "end product," "foreign end product," and "United States" are defined in the clause of this solicitation entitled "Buy American-Supplies."
(2) Foreign End Products:

Line Item No.	Country of Origin
_____	_____
_____	_____
_____	_____

[*List as necessary*]
(3) Domestic end products containing a critical component:
Line Item No. ___
[*List as necessary*]
(4) The Government will evaluate offers in accordance with the policies and procedures of FAR part 25.
(g)
(1) *Buy American-Free Trade Agreements-Israeli Trade Act Certificate*. (Applies only if the clause at FAR 52.225-3, Buy American-Free Trade Agreements-Israeli Trade Act, is included in this solicitation.)
(i)
(A) The Offeror certifies that each end product, except those listed in paragraph (g)(1)(ii) or (iii) of this provision, is a domestic end product and that each domestic end product listed in paragraph (g)(1)(iv) of this provision contains a critical component.
(B) The terms "Bahraini, Moroccan, Omani, Panamanian, or Peruvian end product," "commercially available off-the-shelf (COTS) item," "critical component," "domestic end product," "end product," "foreign end product," "Free Trade Agreement country," "Free Trade

Agreement country end product," "Israeli end product," and "United States" are defined in the clause of this solicitation entitled "Buy American-Free Trade Agreements-Israeli Trade Act."
(ii) The Offeror certifies that the following supplies are Free Trade Agreement country end products (other than Bahraini, Moroccan, Omani, Panamanian, or Peruvian end products) or Israeli end products as defined in the clause of this solicitation entitled "Buy American-Free Trade Agreements-Israeli Trade Act."
Free Trade Agreement Country End Products (Other than Bahraini, Moroccan, Omani, Panamanian, or Peruvian End Products) or *Israeli End Products*:

Line Item No.	Country of Origin
_____	_____
_____	_____
_____	_____

[*List as necessary*]
(iii) The Offeror shall list those supplies that are foreign end products (other than those listed in paragraph (g)(1)(ii) of this provision) as defined in the clause of this solicitation entitled "Buy American-Free Trade Agreements-Israeli Trade Act." The Offeror shall list as other foreign end products those end products manufactured in the United States that do not qualify as domestic end products. For those foreign end products that do not consist wholly or predominantly of iron or steel or a combination of both, the Offeror shall also indicate whether these foreign end products exceed 55 percent domestic content, except for those that are COTS items. If the percentage of the domestic content is unknown, select “no”.
Other Foreign End Products:

Line Item No.	Country of Origin	Exceeds 55% domestic content (yes/no)
_____	_____	_____
_____	_____	_____
_____	_____	_____

[List as necessary]
(iv) The Offeror shall list the line item numbers of domestic end products that contain a critical component (see FAR 25.105).
Line Item No. ___

[List as necessary]
(v) The Government will evaluate *offers* in accordance with the policies and procedures of FAR part 25.
(2) *Buy American-Free Trade Agreements-Israeli Trade Act Certificate, Alternate II*.
If Alternate II to the clause at FAR 52.225-3 is included in this solicitation, substitute the following paragraph (g)(1)(ii) for paragraph (g)(1)(ii) of the basic provision:
(g)(1)(ii) The offeror certifies that the following supplies are Israeli end products as defined in the clause of this solicitation entitled "Buy American—Free Trade Agreements—Israeli Trade Act":
Israeli End Products:

Line Item No.

_____

_____

_____

[*List as necessary*]
(3) *Buy American-Free Trade Agreements-Israeli Trade Act Certificate, Alternate III*.
If Alternate III to the clause at 52.225-3 is included in this solicitation, substitute the following paragraphs (g)(1)(i)(B) and (g)(1)(ii) for paragraphs (g)(1)(i)(B) and (g)(1)(ii) of the basic provision:
(g)(1)(i)(B) The terms "Korean end product", "commercially available off-the-shelf (COTS) item," "critical component," "domestic end product," "end product," "foreign end product," "Free Trade Agreement country," "Free Trade Agreement country end product," "Israeli end product," and "United States" are defined in the clause of this solicitation entitled "Buy American—Free Trade Agreements—Israeli Trade Act."
(g)(1)(ii) The Offeror certifies that the following supplies are Korean end products or Israeli end products as defined in the clause of this solicitation entitled "Buy American—Free Trade Agreements—Israeli Trade Act":
Korean End Products or Israeli End Products:

Line Item No.	Country of Origin
_____	_____
_____	_____
_____	_____

[*List as necessary*]

(4) *Trade Agreements Certificate*. (Applies only if the clause at FAR 52.225-5, Trade Agreements, is included in this solicitation.)
(i) The offeror certifies that each end product, except those listed in paragraph (g)(4)(ii) of this provision, is a U.S.-made or designated country end product, as defined in the clause of this solicitation entitled "Trade Agreements."
(ii) The offeror shall list as other end products those end products that are not U.S.-made or designated country end products.
Other End Products:

Line Item No.	Country of Origin
_____	_____
_____	_____
_____	_____

[*List as necessary*]
(iii) The Government will evaluate offers in accordance with the policies and procedures of FAR part 25. For line items covered by the WTO GPA, the Government will evaluate offers of U.S.-made or designated country end products without regard to the restrictions of the Buy American statute. The Government will consider for award only offers of U.S.-made or designated country end products unless the Contracting Officer determines that there are no offers for such products or that the offers for such products are insufficient to fulfill the requirements of the solicitation.
(h) *Certification Regarding Responsibility Matters (Executive Order 12689*). (Applies only if the contract value is expected to exceed the simplified acquisition threshold.) The offeror certifies, to the best of its knowledge and belief, that the offeror and/or any of its principals–
(1) □ Are, □ are not presently debarred, suspended, proposed for debarment, or declared ineligible for the award of contracts by any Federal agency;
(2) □ Have, □ have not, within a three-year period preceding this offer, been convicted of or had a civil judgment rendered against them for: commission of fraud or a criminal offense in connection with obtaining, attempting to obtain, or performing a Federal, state or local government contract or subcontract; violation of Federal or state antitrust statutes relating to the submission of offers; or commission of embezzlement, theft, forgery, bribery, falsification or destruction of records, making false statements, tax evasion, violating Federal criminal tax laws, or receiving stolen property;
(3) □ Are, □ are not presently indicted for, or otherwise criminally or civilly charged by a Government entity with, commission of any of these offenses enumerated in paragraph (h)(2) of this clause; and
(4) □ Have, □ have not, within a three-year period preceding this offer, been notified of any delinquent Federal taxes in an amount that exceeds the threshold at 9.104-5(a)(2) for which the liability remains unsatisfied.
(i) Taxes are considered delinquent if both of the following criteria apply:

(A) *The tax liability is finally determined*. The liability is finally determined if it has been assessed. A liability is not finally determined if there is a pending administrative or judicial challenge. In the case of a judicial challenge to the liability, the liability is not finally determined until all judicial appeal rights have been exhausted.
(B) *The taxpayer is delinquent in making payment*. A taxpayer is delinquent if the taxpayer has failed to pay the tax liability when full payment was due and required. A taxpayer is not delinquent in cases where enforced collection action is precluded.
(ii) *Examples*.

(A) The taxpayer has received a statutory notice of deficiency, under I.R.C. §6212, which entitles the taxpayer to seek Tax Court review of a proposed tax deficiency. This is not a delinquent tax because it is not a final tax liability. Should the taxpayer seek Tax Court review, this will not be a final tax liability until the taxpayer has exercised all judicial appeal rights.
(B) The IRS has filed a notice of Federal tax lien with respect to an assessed tax liability, and the taxpayer has been issued a notice under I.R.C. §6320 entitling the taxpayer to request a hearing with the IRS Office of Appeals contesting the lien filing, and to further appeal to the Tax Court if the IRS determines to sustain the lien filing. In the course of the hearing, the taxpayer is entitled to contest the underlying tax liability because the taxpayer has had no prior opportunity to contest the liability. This is not a delinquent tax because it is not a final tax liability. Should the taxpayer seek tax court review, this will not be a final tax liability until the taxpayer has exercised all judicial appeal rights.
(C) The taxpayer has entered into an installment agreement pursuant to I.R.C. §6159. The taxpayer is making timely payments and is in full compliance with the agreement terms. The taxpayer is not delinquent because the taxpayer is not currently required to make full payment.
(D) The taxpayer has filed for bankruptcy protection. The taxpayer is not delinquent because enforced collection action is stayed under 11 U.S.C. §362 (the Bankruptcy Code).
(i) *Certification Regarding Knowledge of Child Labor for Listed End Products (Executive Order 13126). [The Contracting Officer must list in paragraph (i)(1) any end products being acquired under this solicitation that are included in the List of Products Requiring Contractor Certification as to Forced or Indentured Child Labor, unless excluded at 22.1503(b).]*
(1) *Listed end products.*

Listed End Product	Listed Countries of Origin
_____	_____
_____	_____

(2) *Certification. [If the Contracting Officer has identified end products and countries of origin in paragraph (i)(1) of this provision, then the offeror must certify to either (i)(2)(i) or (i)(2)(ii) by checking the appropriate block.]*
☐ (i) *The* offeror *will not supply any* end product *listed in paragraph (i)(1) of this provision that was mined, produced, or manufactured in the corresponding country as listed for that product.*
☐ (ii) *The* offeror may *supply an* end product *listed in paragraph (i)(1) of this provision that was mined, produced, or manufactured in the corresponding country as listed for that product.*

The offeror *certifies that it has made a good faith effort to determine whether forced or indentured child labor was used to mine, produce, or manufacture any such end product furnished under this contract. On the basis of those efforts, the* offeror *certifies that it is not aware of any such use of child labor.*

(j) *Place of manufacture.* (Does not apply unless the solicitation is predominantly for the acquisition of manufactured end products.) For statistical purposes only, the offeror shall indicate whether the place of manufacture of the end products it expects to provide in response to this solicitation is predominantly-

(1) □ In the United States (Check this box if the total anticipated price of offered end products manufactured in the United States exceeds the total anticipated price of offered end products manufactured outside the United States); or

(2) □ Outside the United States.

(k) *Certificates regarding exemptions from the application of the Service Contract Labor Standards* (Certification by the offeror as to its compliance with respect to the contract also constitutes its certification as to compliance by its subcontractor if it subcontracts out the exempt services.) [*The contracting officer is to check a box to indicate if paragraph (k)(1) or (k)(2) applies.*]

☐ (1) *Maintenance, calibration, or repair of certain equipment as described in FAR* 22.1003-4(c)(1). The offeror □ does □ does not certify that–

(i) The items of equipment to be serviced under this contract are used regularly for other than Governmental purposes and are sold or traded by the offeror (or subcontractor in the case of an exempt subcontract) in substantial quantities to the general public in the course of normal business operations;

(ii) The services will be furnished at prices which are, or are based on, established catalog or market prices (see FAR 22.1003-4(c)(2)(ii)) for the maintenance, calibration, or repair of such equipment; and

(iii) The compensation (wage and fringe benefits) plan for all service employees performing work under the contract will be the same as that used for these employees and equivalent employees servicing the same equipment of commercial customers.

☐ (2) *Certain services as described in FAR* 22.1003-4(d)(1). The offeror □ does □ does not certify that-

(i) The services under the contract are offered and sold regularly to non-Governmental customers, and are provided by the offeror (or subcontractor in the case of an exempt subcontract) to the general public in substantial quantities in the course of normal business operations;

(ii) The contract services will be furnished at prices that are, or are based on, established catalog or market prices (see FAR 22.1003-4(d)(2)(iii));

(iii) Each service employee who will perform the services under the contract will spend only a small portion of his or her time (a monthly average of less than 20 percent of the available hours on an annualized basis, or less than 20 percent of available hours during the contract period if the contract period is less than a month) servicing the Government contract; and

(iv) The compensation (wage and fringe benefits) plan for all service employees performing work under the contract is the same as that used for these employees and equivalent employees servicing commercial customers.

(3) If paragraph (k)(1) or (k)(2) of this clause applies–

(i) If the offeror does not certify to the conditions in paragraph (k)(1) or (k)(2) and the Contracting Officer did not attach a Service Contract Labor Standards wage determination to the solicitation, the offeror shall notify the Contracting Officer as soon as possible; and
(ii) The Contracting Officer may not make an award to the offeror if the offeror fails to execute the certification in paragraph (k)(1) or (k)(2) of this clause or to contact the Contracting Officer as required in paragraph (k)(3)(i) of this clause.
(l) *Taxpayer Identification Number (TIN) (* 26 U.S.C. 6109, 31 U.S.C. 7701). (Not applicable if the offeror is required to provide this information to the SAM to be eligible for award.)
(1) All offerors must submit the information required in paragraphs (l)(3) through (l)(5) of this provision to comply with debt collection requirements of 31 U.S.C. 7701(c) and 3325(d), reporting requirements of 26 U.S.C. 6041, 6041A, and 6050M, and implementing regulations issued by the Internal Revenue Service (IRS).
(2) The TIN may be used by the Government to collect and report on any delinquent amounts arising out of the offeror's relationship with the Government (31 U.S.C. 7701(c)(3)). If the resulting contract is subject to the payment reporting requirements described in FAR 4.904, the TIN provided hereunder may be matched with IRS records to verify the accuracy of the offeror's TIN.
(3) *Taxpayer Identification Number (TIN)*.
☐TIN: _____.
☐TIN has been applied for.
☐TIN is not required because:
☐Offeror is a nonresident alien, foreign corporation, or foreign partnership that does not have income effectively connected with the conduct of a trade or business in the United States and does not have an office or place of business or a fiscal paying agent in the United States;
☐Offeror is an agency or instrumentality of a foreign government;
☐Offeror is an agency or instrumentality of the Federal Government.
(4) *Type of organization*.
☐Sole proprietorship;
☐Partnership;
☐Corporate entity (not tax-exempt);
☐Corporate entity (tax-exempt);
☐Government entity (Federal, State, or local);
☐Foreign government;
☐International organization per 26 CFR1.6049-4;
☐Other _____.
(5) *Common parent*.
☐Offeror is not owned or controlled by a common parent;
☐Name and TIN of common parent:
Name _____.
TIN _____.
(m) *Restricted business operations in Sudan*. By submission of its offer, the offeror certifies that the offeror does not conduct any restricted business operations in Sudan.
(n) Prohibition on Contracting with Inverted Domestic Corporations.

(1) Government agencies are not permitted to use appropriated (or otherwise made available) funds for contracts with either an inverted domestic corporation, or a subsidiary of an inverted domestic corporation, unless the exception at 9.108-2(b) applies or the requirement is waived in accordance with the procedures at 9.108-4.
(2) *Representation*. The Offeror represents that–
(i) It □ is, □ is not an inverted domestic corporation; and
(ii) It □ is, □ is not a subsidiary of an inverted domestic corporation.
(o) Prohibition on contracting with entities engaging in certain activities or transactions relating to Iran.

(1) The offeror shall e-mail questions concerning sensitive technology to the Department of State at CISADA106@state.gov.
(2) *Representation and Certifications*. Unless a waiver is granted or an exception applies as provided in paragraph (o)(3) of this provision, by submission of its offer, the offeror-
(i) Represents, to the best of its knowledge and belief, that the offeror does not export any sensitive technology to the government of Iran or any entities or individuals owned or controlled by, or acting on behalf or at the direction of, the government of Iran;
(ii) Certifies that the offeror, or any person owned or controlled by the offeror, does not engage in any activities for which sanctions may be imposed under section 5 of the Iran Sanctions Act; and
(iii) Certifies that the offeror, and any person owned or controlled by the offeror, does not knowingly engage in any transaction that exceeds the threshold at FAR 25.703-2(a)(2) with Iran's Revolutionary Guard Corps or any of its officials, agents, or affiliates, the property and interests in property of which are blocked pursuant to the International Emergency Economic Powers Act (et seq.) (see OFAC's Specially Designated Nationals and Blocked Persons List at https://www.treasury.gov/resource-center/sanctions/SDN-List/Pages/default.aspx).
(3) The representation and certification requirements of paragraph (o)(2) of this provision do not apply if-
(i) This solicitation includes a trade agreements certification (*e.g.*, 52.212-3(g) or a comparable agency provision); and
(ii) The offeror has certified that all the offered products to be supplied are designated country end products.
(p) *Ownership or Control of Offeror*. (Applies in all solicitations when there is a requirement to be registered in SAM or a requirement to have a unique entity identifier in the solicitation).
(1) The Offeror represents that it □ has or □ does not have an immediate owner. If the Offeror has more than one immediate owner (such as a joint venture), then the Offeror shall respond to paragraph (2) and if applicable, paragraph (3) of this provision for each participant in the joint venture.
(2) If the Offeror indicates "has" in paragraph (p)(1) of this provision, enter the following information:
Immediate owner CAGE code: _____.
Immediate owner legal name: _____.
(Do not use a "doing business as" name)
Is the immediate owner owned or controlled by another entity: □ Yes or □ No.

(3) If the Offeror indicates "yes" in paragraph (p)(2) of this provision, indicating that the immediate owner is owned or controlled by another entity, then enter the following information:
Highest-level owner CAGE code: _____.
Highest-level owner legal name: _____.
(*Do not use a "doing business as" name*)
(q) *Representation by Corporations Regarding Delinquent Tax Liability or a Felony Conviction under any Federal Law.*
(1) As required by sections 744 and 745 of Division E of the Consolidated and Further Continuing Appropriations Act, 2015 (Pub. L. 113-235), and similar provisions, if contained in subsequent appropriations acts, The Government will not enter into a contract with any corporation that–
(i) Has any unpaid Federal tax liability that has been assessed, for which all judicial and administrative remedies have been exhausted or have lapsed, and that is not being paid in a timely manner pursuant to an agreement with the authority responsible for collecting the tax liability, where the awarding agency is aware of the unpaid tax liability, unless an agency has considered suspension or debarment of the corporation and made a determination that suspension or debarment is not necessary to protect the interests of the Government; or
(ii) Was convicted of a felony criminal violation under any Federal law within the preceding 24 months, where the awarding agency is aware of the conviction, unless an agency has considered suspension or debarment of the corporation and made a determination that this action is not necessary to protect the interests of the Government.
(2) The Offeror represents that–
(i) It is □ is not □ a corporation that has any unpaid Federal tax liability that has been assessed, for which all judicial and administrative remedies have been exhausted or have lapsed, and that is not being paid in a timely manner pursuant to an agreement with the authority responsible for collecting the tax liability; and
(ii) It is □ is not □ a corporation that was convicted of a felony criminal violation under a Federal law within the preceding 24 months.
(r) *Predecessor of Offeror.* (Applies in all solicitations that include the provision at 52.204-16, Commercial and Government Entity Code Reporting.)
(1) The Offeror represents that it □ is or □ is not a successor to a predecessor that held a Federal contract or grant within the last three years.
(2) If the Offeror has indicated "is" in paragraph (r)(1) of this provision, enter the following information for all predecessors that held a Federal contract or grant within the last three years (if more than one predecessor, list in reverse chronological order):
Predecessor CAGE code: (or mark "Unknown").
Predecessor legal name:_____.
(*Do not use a "doing business as" name*).
(s) [Reserved].
(t) *Public Disclosure of Greenhouse Gas Emissions and Reduction Goals*. Applies in all solicitations that require offerors to register in SAM (12.301(d)(1)).
(1) This representation shall be completed if the Offeror received $7.5 million or more in contract awards in the prior Federal fiscal year. The representation is optional if the Offeror received less than $7.5 million in Federal contract awards in the prior Federal fiscal year.

(2) Representation. [Offeror to check applicable block(s) in paragraph (t)(2)(i) and (ii)].

(i) The Offeror (itself or through its immediate owner or highest-level owner) □ does, □ does not publicly disclose greenhouse gas emissions, i.e., makes available on a publicly accessible website the results of a greenhouse gas inventory, performed in accordance with an accounting standard with publicly available and consistently applied criteria, such as the Greenhouse Gas Protocol Corporate Standard.
(ii) The Offeror (itself or through its immediate owner or highest-level owner) □ does, □ does not publicly disclose a quantitative greenhouse gas emissions reduction goal, i.e., make available on a publicly accessible website a target to reduce absolute emissions or emissions intensity by a specific quantity or percentage.
(iii) A publicly accessible website includes the Offeror's own website or a recognized, third-party greenhouse gas emissions reporting program.
(3) If the Offeror checked "does" in paragraphs (t)(2)(i) or (t)(2)(ii) of this provision, respectively, the Offeror shall provide the publicly accessible website(s) where greenhouse gas emissions and/or reduction goals are reported:_____.
(u)
(1) In accordance with section 743 of Division E, Title VII, of the Consolidated and Further Continuing Appropriations Act, 2015 (Pub. L. 113-235) and its successor provisions in subsequent appropriations acts (and as extended in continuing resolutions), Government agencies are not permitted to use appropriated (or otherwise made available) funds for contracts with an entity that requires employees or subcontractors of such entity seeking to report waste, fraud, or abuse to sign internal confidentiality agreements or statements prohibiting or otherwise restricting such employees or subcontractors from lawfully reporting such waste, fraud, or abuse to a designated investigative or law enforcement representative of a Federal department or agency authorized to receive such information.
(2) The prohibition in paragraph (u)(1) of this provision does not contravene requirements applicable to Standard Form 312 (Classified Information Nondisclosure Agreement), Form 4414 (Sensitive Compartmented Information Nondisclosure Agreement), or any other form issued by a Federal department or agency governing the nondisclosure of classified information.
(3) *Representation*. By submission of its offer, the Offeror represents that it will not require its employees or subcontractors to sign or comply with internal confidentiality agreements or statements prohibiting or otherwise restricting such employees or subcontractors from lawfully reporting waste, fraud, or abuse related to the performance of a Government contract to a designated investigative or law enforcement representative of a Federal department or agency authorized to receive such information (*e.g.*, agency Office of the Inspector General).
(v) *Covered Telecommunications Equipment or Services-Representation.* Section 889(a)(1)(A) and section 889 (a)(1)(B) of Public Law 115-232.
(1) The Offeror shall review the list of excluded parties in the System for Award Management (SAM) (https://www.sam.gov) for entities excluded from receiving federal awards for "covered telecommunications equipment or services".
(2) The Offeror represents that–
(i) It □ does, □ does not provide covered telecommunications equipment or services as a part of its offered products or services to the Government in the performance of any contract, subcontract, or other contractual instrument.

(ii) After conducting a reasonable inquiry for purposes of this representation, that it □ does, □ does not use covered telecommunications equipment or services, or any equipment, system, or service that uses covered telecommunications equipment or services.
(End of Provision)

Alternate I (Feb 2024). As prescribed in 12.301 (b)(2), add the following paragraph (c)(12) to the basic provision:
(12) (Complete if the offeror has represented itself as disadvantaged in paragraph (c)(5) of this provision.)
□ Black American.
□ Hispanic American.
□ Native American (American Indians, Eskimos, Aleuts, or Native Hawaiians).
□ Asian-Pacific American (persons with origins from Burma, Thailand, Malaysia, Indonesia, Singapore, Brunei, Japan, China, Taiwan, Laos, Cambodia (Kampuchea), Vietnam, Korea, The Philippines, Republic of Palau, Republic of the Marshall Islands, Federated States of Micronesia, the Commonwealth of the Northern Mariana Islands, Guam, Samoa, Macao, Hong Kong, Fiji, Tonga, Kiribati, Tuvalu, or Nauru).
□ Subcontinent Asian (Asian-Indian) American (persons with origins from India, Pakistan, Bangladesh, Sri Lanka, Bhutan, the Maldives Islands, or Nepal).
□ Individual/concern, other than one of the preceding.

Add 52.225-4 to solicitations if they contain the clause 52.225-3

52.225-4 BUY AMERICAN-FREE TRADE AGREEMENTS-ISRAELI TRADE ACT CERTIFICATE (NOV 2023)

(a) (1) The Offeror certifies that each end product, except those listed in paragraph (b) or (c)(1) of this provision, is a domestic end product and that each domestic end product listed in paragraph (c)(2) of this provision contains a critical component.
(2) The terms "Bahraini, Moroccan, Omani, Panamanian, or Peruvian end product," "commercially available off-the-shelf (COTS) item," "critical component," "domestic end product," "end product," "foreign end product," "Free Trade Agreement country," "Free Trade Agreement country end product," "Israeli end product," and "United States" are defined in the clause of this solicitation entitled "Buy American-Free Trade Agreements-Israeli Trade Act."
(b) The Offeror certifies that the following supplies are Free Trade Agreement country end products (other than Bahrainian, Moroccan, Omani, Panamanian, or Peruvian end products) or Israeli end products as defined in the clause of this solicitation entitled "Buy American-Free Trade Agreements-Israeli Trade Act":
Free Trade Agreement Country End Products (Other than Bahraini, Moroccan, Omani, Panamanian, or Peruvian End Products) or Israeli End Products:
Line Item No.

Country of Origin

_____

_____

_____

_____

_____

_____
[List as necessary]
(c)
(1) The Offeror shall list those supplies that are foreign end products (other than those listed in paragraph (b) of this provision) as defined in the clause of this solicitation entitled "Buy American-Free Trade Agreements-Israeli Trade Act." The Offeror shall list as other foreign end products those end products manufactured in the United States that do not qualify as domestic end products. For those foreign end products that do not consist wholly or predominantly of iron or steel or a combination of both, the Offeror shall also indicate whether these foreign end products exceed 55 percent domestic content, except for those that are COTS items. If the percentage of the domestic content is unknown, select “no”.
Other Foreign End Products:
Line Item No.

Country of Origin

Exceeds 55% domestic content (yes/no)

_____

_____

_____

_____

_____

_____

_____

[List as necessary]
(2) The Offeror shall list the line item numbers of domestic end products that contain a critical component (see FAR 25.105).
Line Item No. ___

[List as necessary]
(d) The Government will evaluate offers in accordance with the policies and procedures of part 25 of the Federal Acquisition Regulation.
(End of provision)
Alternate I [Reserved]
Alternate II (Dec 2022). As prescribed in 25.1101 (b)(2)(ii), substitute the following paragraph (b) for paragraph (b) of the basic provision:
(b) The offeror certifies that the following supplies are Israeli end products as defined in the clause of this solicitation entitled “Buy American—Free Trade Agreements—Israeli Trade Act—Balance of Payments Program”:
ISRAELI END PRODUCTS:
Line Item No.

_____

_____

_____
[List as necessary]
Alternate III(Nov 2023) . As prescribed in 25.1101 (b)(2)(iii), substitute the following paragraph (b) for paragraph (b) of the basic provision:
(b) The Offeror certifies that the following supplies are Free Trade Agreement country end products (other than Bahraini, Korean, Moroccan, Omani, Panamanian, or Peruvian end products) or Israeli end products as defined in the clause of this solicitation entitled "Buy American-Free Trade Agreements-Israeli Trade Act":

FREE TRADE AGREEMENT COUNTRY END PRODUCTS (OTHER THAN BAHRAINI, KOREAN, MOROCCAN, OMANI, PANAMANIAN, OR PERUVIAN END PRODUCTS) OR ISRAELI END PRODUCTS:
Line Item No.

Country of Origin

_____

_____

_____

_____

_____

_____
[List as necessary]

52.229-11 TAX ON CERTAIN FOREIGN PROCUREMENTS – NOTICE AND REPRESENTATION (JUN 2020)

(a) *Definitions.* As used in this provision—

Foreign person means any person other than a United States person.

Specified Federal procurement payment means any payment made pursuant to a contract with a foreign contracting party that is for goods, manufactured or produced, or services provided in a foreign country that is not a party to an international procurement agreement with the United States. For purposes of the prior sentence, a foreign country does not include an outlying area.

United States person as defined in 26 U.S.C. 7701(a)(30) means—

(1) A citizen or resident of the United States;

(2) A domestic partnership;

(3) A domestic corporation;

(4) Any estate (other than a foreign estate, within the meaning of 26 U.S.C. 701(a)(31)); and

(5) Any trust if—

(i) A court within the United States is able to exercise primary supervision over the administration of the trust; and

(ii) One or more United States persons have the authority to control all substantial decisions of the trust.

(b) Unless exempted, there is a 2 percent tax of the amount of a specified Federal procurement payment on any foreign person receiving such payment. See 26 U.S.C. 5000C and its implementing regulations at 26 CFR 1.5000C-1 through 1.5000C-7.

(c) Exemptions from withholding under this provision are described at 26 CFR 1.5000C-1(d)(5) through (7). The Offeror would claim an exemption from the withholding by using the Department of the Treasury Internal Revenue Service Form W-14, Certificate of Foreign Contracting Party Receiving Federal Procurement Payments, available via the internet at ***www.irs.gov/w14*** . Any exemption claimed and self-certified on the IRS Form W-14 is subject to audit by the IRS. Any disputes regarding the imposition and collection of the 26 U.S.C. 5000C

tax are adjudicated by the IRS as the 26 U.S.C. 5000C tax is a tax matter, not a contract issue. The IRS Form W-14 is provided to the acquiring agency rather than to the IRS.

(d) For purposes of withholding under 26 U.S.C. 5000C, the Offeror represents that—

(1) It [__]is [__]is not a foreign person; and

(2) If the Offeror indicates "is" in paragraph (d)(1) of this provision, then the Offeror represents that—I am claiming on the IRS Form W-14 [____] a full exemption, or [____] partial or no exemption [*Offeror shall select one*] from the excise tax.

(e) If the Offeror represents it is a foreign person in paragraph (d)(1) of this provision, then—

(1) The clause at FAR 52.229-12, Tax on Certain Foreign Procurements, will be included in any resulting contract; and

(2) The Offeror shall submit with its offer the IRS Form W-14. If the IRS Form W-14 is not submitted with the offer, exemptions will not be applied to any resulting contract and the Government will withhold a full 2 percent of each payment.

(f) If the Offeror selects "is" in paragraph (d)(1) and "partial or no exemption" in paragraph (d)(2) of this provision, the Offeror will be subject to withholding in accordance with the clause at FAR 52.229-12, Tax on Certain Foreign Procurements, in any resulting contract.

(g) A taxpayer may, for a fee, seek advice from the Internal Revenue Service (IRS) as to the proper tax treatment of a transaction. This is called a private letter ruling. Also, the IRS may publish a revenue ruling, which is an official interpretation by the IRS of the Internal Revenue Code, related statutes, tax treaties, and regulations. A revenue ruling is the conclusion of the IRS on how the law is applied to a specific set of facts. **For questions relating to the interpretation of the IRS regulations go to *https://www.irs.gov/help/tax-law-questions* .**

(End of provision)

THE FOLLOWING DOSAR PROVISION IS PROVIDED IN FULL TEXT:

652.225-70 ARAB LEAGUE BOYCOTT OF ISRAEL (AUG 1999)

(a) Definitions. As used in this provision:
Foreign person means any person other than a United States person as defined below.

United States person means any United States resident or national (other than an individual resident outside the United States and employed by other than a United States person), any domestic concern (including any permanent domestic establishment of any foreign concern), and any foreign subsidiary or affiliate (including any permanent foreign establishment) of any

domestic concern which is controlled in fact by such domestic concern, as provided under the Export Administration Act of 1979, as amended.

(b) Certification. By submitting this offer, the offeror certifies that it is not:

(1) Taking or knowingly agreeing to take any action, with respect to the boycott of Israel by Arab League countries, which Section 8(a) of the Export Administration Act of 1979, as amended (50 U.S.C. 2407(a)) prohibits a United States person from taking; or,

(2) Discriminating in the award of subcontracts on the basis of religion.

(End of Provision)

ADDENDUM TO SOLICITATION PROVISIONS
FAR AND DOSAR PROVISIONS NOT PRESCRIBED IN PART 12

THE FOLLOWING FEDERAL ACQUISITION REGULATION SOLICITATION PROVISIONS ARE INCORPORATED BY REFERENCE:

52.225-25 PROHIBITION ON CONTRACTING WITH ENTITIES ENGAGING IN CERTAIN ACTIVITIES OR TRANSACTIONS RELATING TO IRAN—REPRESENTATION AND CERTIFICATIONS (JUN 2020)