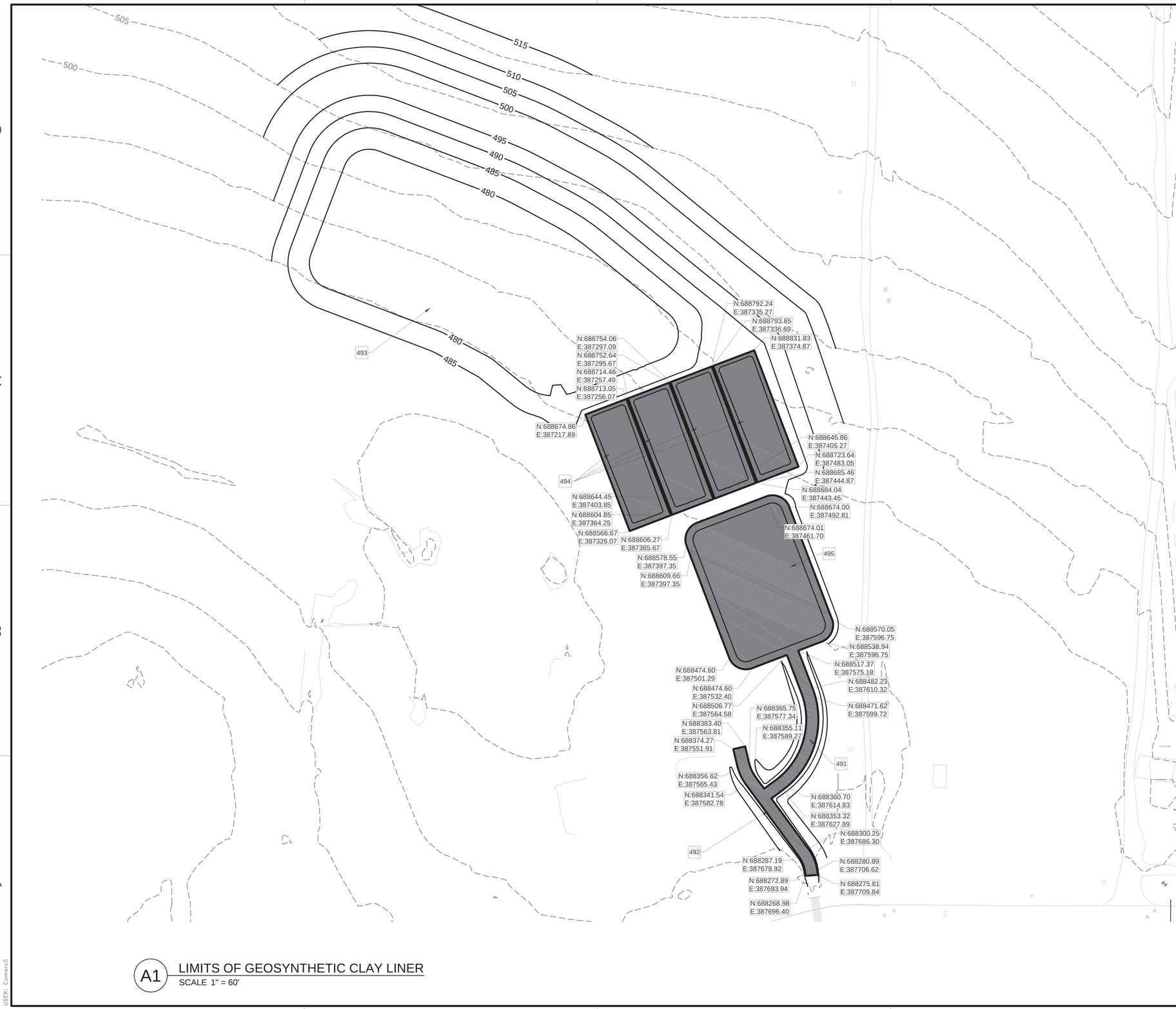

A1 LIMITS OF GEOSYNTHETIC CLAY LINER

SCALE 1" = 60'

GENERAL NOTES

A	REFER TO SHEETS CG101 - CG127 FOR GRADING AND DRAINAGE PLANS.
B	CONTOURS ARE AT 5' INTERVALS

KEYNOTES

491	SWALE, RE: C1/CG502
492	GEOSYNTHETIC CLAY LINER, RE: C1/CG502
493	DETENTION AREA
494	SAND FILTER
495	PRETREATMENT

LEGEND

GEOSYNTHETIC CLAY LINER, RE: C1/CG502

525 MAJOR CONTOUR

525 EXISTING CONTOUR

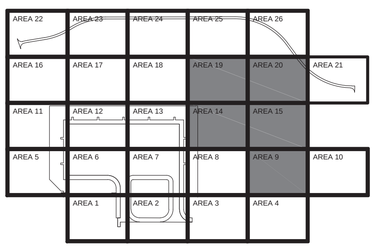

KEY PLAN

GRAPHIC SCALE

0 30' 60' 120'

SCALE: 1"=60'

NORTH ARROW

TRUE N

STATE OF TEXAS
JENNIFER M. HAYNES
90167
LICENSED
PROFESSIONAL ENGINEER
1/27/2026
TEXAS REGISTERED ENGINEERING FIRM F-2966 SEAL

Jacobs / BURNS McDONNELL
JACOBS/B&M, A JOINT VENTURE
1100 NORTH GLEBE ROAD
SUITE 500
ARLINGTON, VA 22201

A/E Contract No. N62742-20-D-0002
A/E Task Order No. N6274221F0315
JCG NO. 03430603 A/E INFO

APPROVED
FOR COMMANDER NAVFAC DATE 02/02/2026

ACTIVITY
AFIMSC APPROVAL PER NAVFAC SAT-TO CHECKLIST

SATISFACTORY TO DATE 31 DEC 2025

DES: JMH	DRW: SMC	REV:	ATM
PM/DM			KKK
BRANCH MANAGER			SMK
CHIEF ENG/ARCH			SMK
FIRE PROTECTION			RO

DEPARTMENT OF THE NAVY
NAVFAC PACIFIC
NAVAL FACILITIES ENGINEERING SYSTEMS COMMAND
NAVAL FACILITIES ENGINEERING SYSTEMS COMMAND – PACIFIC
JOINT REGION MARIANAS (JRM)
ANDERSEN AIR FORCE BASE
GUAM

FY24 AJJY183012 (P-012),
PDI: NORTH AIRCRAFT PARKING RAMP
LIMITS OF GEOSYNTHETIC CLAY LINER

SCALE: AS SHOWN
EPROJECTS NO.: 1665555
CONSTR CONTROL NO.
NAVFAC DRAWING NO. 17361836
SHEET 213 OF 377

CG141

REDESIGN FINAL SUBMITTAL

IF SHEET IS LESS THAN 22" X 34" REDUCED PRINT. USE GRAPHIC SCALES

FILE NAME: U:\BLDG\NAVFAC Pacific\03430603 – P-012 North Aircraft Parking Ramp\700 Working Documents\740 Sheets\740.01 Civil\P012_1665555_CG141.dwg
LAYOUT NAME: LIMITS OF GEOSYNTHETIC CLAY LINER
PLOTTED: 01/28/2026 8:15am
USER: CamersS

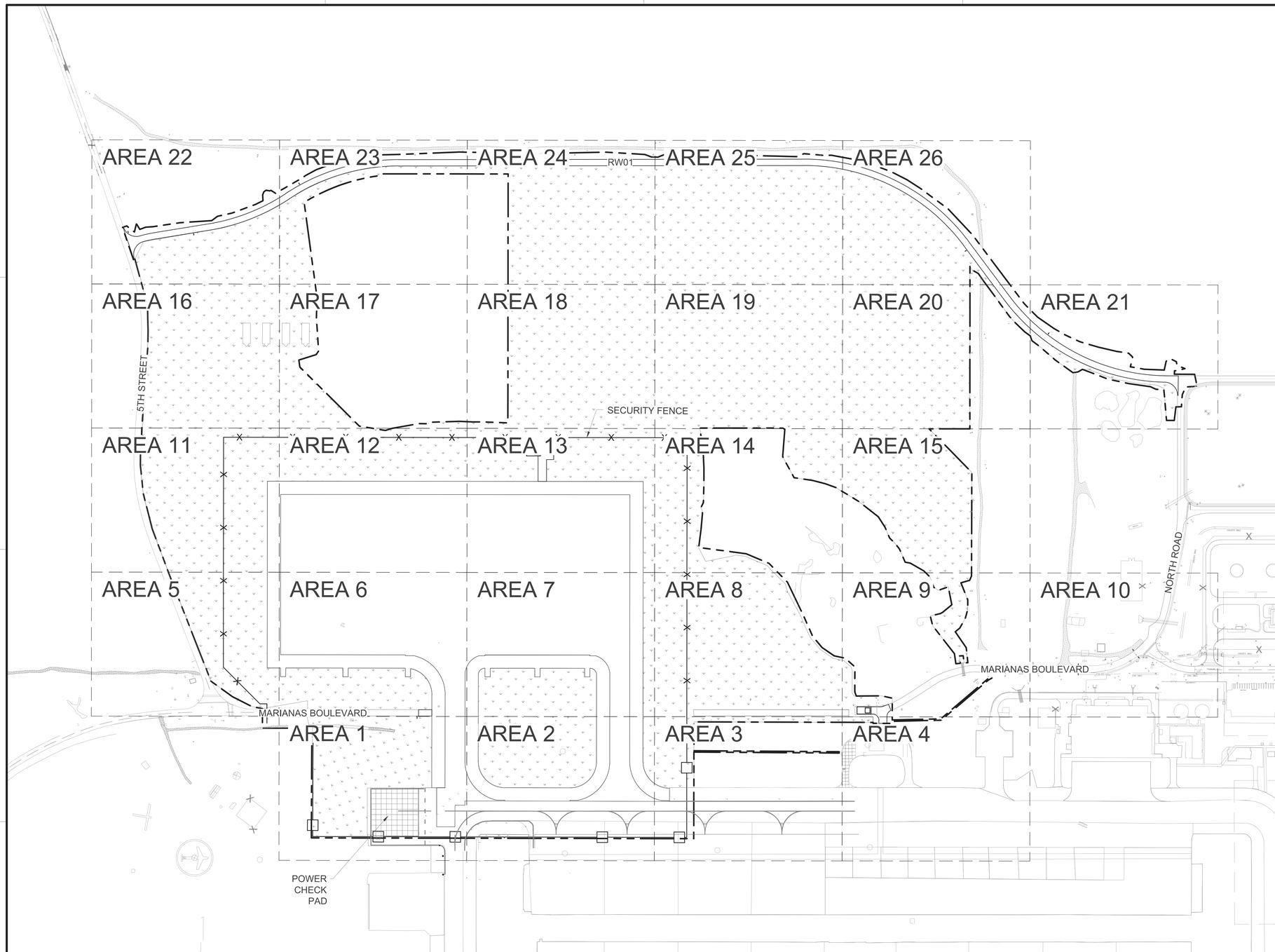

A1 LAWN RESTORATION PLAN
SCALE: 1" = 200'

GENERAL NOTES

A	A 365-CALENDAR DAY LANDSCAPE ESABLISHMENT PERIOD WILL BE REQUIRED FOR PLANT MATERIAL.
B	BACKFILL MIX MUST CONSIST OF FOUR (4) PARTS OF AMENDED IMPORTED PLANTING SOIL TO ONE (1) PART ORGANIC SOIL CONDITIONER. ADD ONE (1) POUND OF 10-30-10 FERTILIZER TO ONE (1) CUBIC YARD OF BACKFILL MIX. MIX ON PROJECT SITE PRIOR TO PLANTING OPERATIONS.
C	INDICATED BACKFILL MIX IS FOR BIDDING PURPOSES ONLY. A SOIL CHEMICAL ANALYSIS WITH RECOMMENDATIONS IS REQUIRED AND TAKES PRECEDENCE OVER THE ABOVE INDICATED MIXTURE AND SPECIFICATION.
D	PERFORM AERATION, MINIMUM 4" DEPTH, USING HOLLOW TINES TO AVOID SOIL COMPACTION, ON NATURAL GRASS AREAS ON LAST DAY OF LANDSCAPE ESTABLISHMENT PERIOD.
E	GRASS AREAS DAMAGED BY CONSTRUCTION OPERATIONS INCLUDING ACCESS, STORAGE, AND LAY DOWN AREAS.
F	VERIFY LOCATION OF UNDERGROUND UTILITIES AND OTHER OBSTRUCTIONS THAT MAY AFFECT THE WORK. REPORT OBSTRUCTIONS ENCOUNTERED, AND/OR DAMAGED, TO THE CONTRACTING OFFICER. ONCE DAMAGE IS ASSESSED, INCLUDING APPROPRIATE DISCIPLINE(S), COORDINATE REPAIRS TO UTILITY LINES OR OTHER UNDERGROUND OBSTRUCTIONS AT CONTRACTOR'S EXPENSE.
G	THE LANDSCAPE ESTABLISHMENT PERIOD WILL COMMENCE ON THE DATE THAT INSPECTION BY THE CONTRACTING OFFICER SHOWS THE PLANTS FURNISHED UNDER THIS CONTRACT HAVE BEEN SATISFACTORILY INSTALLED AND MUST CONTINUE FOR A PERIOD OF 365 DAYS.
H	TURF AREAS, PAVEMENTS AND FACILITIES THAT HAVE BEEN DAMAGED FROM CONSTRUCTION OPERATIONS MUST BE RESTORED TO ORIGINAL CONDITION AT THE CONTRACTOR'S EXPENSE. KEEP CLEAN AT ALL TIMES AT LEAST ONE PAVED PEDESTRIAN ACCESS ROUTE AND ONE PAVED VEHICULAR ACCESS ROUTE TO EACH BUILDING. CLEAN OTHER PAVING WHEN WORK IN ADJACENT AREAS IS COMPLETE.
J	LANDSCAPE SUBMITTALS MUST BE REVIEWED AND APPROVED BY NAVFAC PAC RLA.
K	TO AID IN THE PREVENTION OF ACCIDENTAL INTRODUCTIONS OF NON-NATIVE SPECIES OR INVASIVE SPECIES, DEVELOP A HAZARD ANALYSIS AND CRITICAL CONTROL POINT (HACCP) PLAN WHICH WILL IDENTIFY RISKS AND POTENTIAL PATHWAYS FOR INVASIVE SPECIES AND WILL OUTLINE PROCEDURES FOR CONTROLLING AND REMOVING RISKS IDENTIFIED. THIS PLAN WILL BE APPROVED BY THE INSTALLATION'S NATURAL RESOURCE MANAGER OR BIOLOGICAL MONITOR.

LEGEND

- HYDROSEED 50/50% BERMUDA/CENTIPEDE GRASS MIX (APPROX. 94.5 AC)
- LIMITS OF DISTURBANCE
- 7' HIGH SECURITY FENCE RE: C1/CS505
- TEMPORARY FENCE (FREE ZONE BOUNDARY), RE: A1/CS506

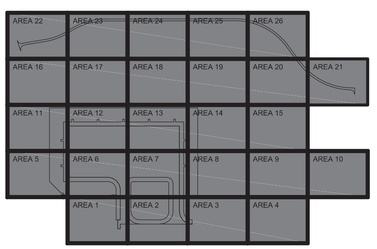

OVERALL
KEY PLAN

GRAPHIC SCALE
0 100' 200' 400'
SCALE: 1"=200'

NORTH ARROW
TRUE N

NAVFAC

STATE OF TEXAS
JENNIFER M. HAYNES
90167
LICENSED
PROFESSIONAL ENGINEER
1/27/2026
TEXAS REGISTERED ENGINEERING FIRM F-3566 SEAL

Jacobs / BURNS & McDONNELL
JACOBS/B&M, A JOINT VENTURE
1100 NORTH GLEBE ROAD
SUITE 500
ARLINGTON, VA 22201
A/E Contract No. N62742-20-D-0002
A/E Task Order No. N62742219 0315
JCG NO. 03430603
A/E INFO

APPROVED
FOR COMMANDER NAVFAC DATE 02/02/2026

ACTIVITY
AFIMSC APPROVAL PER NAVFAC SAT-TO CHECKLIST
SATISFACTORY TO DATE 31 DEC 2025

DES:	JMH	DRW: SMC	REV: ATM
PM/DM			KKK
BRANCH MANAGER			SMK
CHIEF ENG/ARCH			SMK
FIRE PROTECTION			RO

DEPARTMENT OF THE NAVY
NAVFAC PACIFIC
ANDERSEN AIR FORCE BASE
NAVAL FACILITIES ENGINEERING SYSTEMS COMMAND
NAVAL FACILITIES ENGINEERING SYSTEMS COMMAND – PACIFIC
JOINT REGION MARIANAS (JRM)
GUAM

FY24 AUJY183012 (P-012),
PDI: NORTH AIRCRAFT PARKING RAMP
LAWN RESTORATION PLAN

SCALE: AS SHOWN
EPROJECTS NO.: 1665555
CONSTR CONTROL NO.
NAVFAC DRAWING NO. 17361837
SHEET 214 OF 377
CG142

IF SHEET IS LESS THAN 22" X 34" REDUCED PRINT. USE GRAPHIC SCALES

REDESIGN FINAL SUBMITTAL

FILE NAME: U:\BLDG\NAVFAC Pacific\03430603 – P-012 North Aircraft Parking Ramp\700 Working Documents\740 Sheets\740.01 Civil\P012_1665555_CG142.dwg
LAYOUT NAME: LAWN RESTORATION PLAN
PLOTTED: 01/27/2026 11:24pm
USER: Comerios

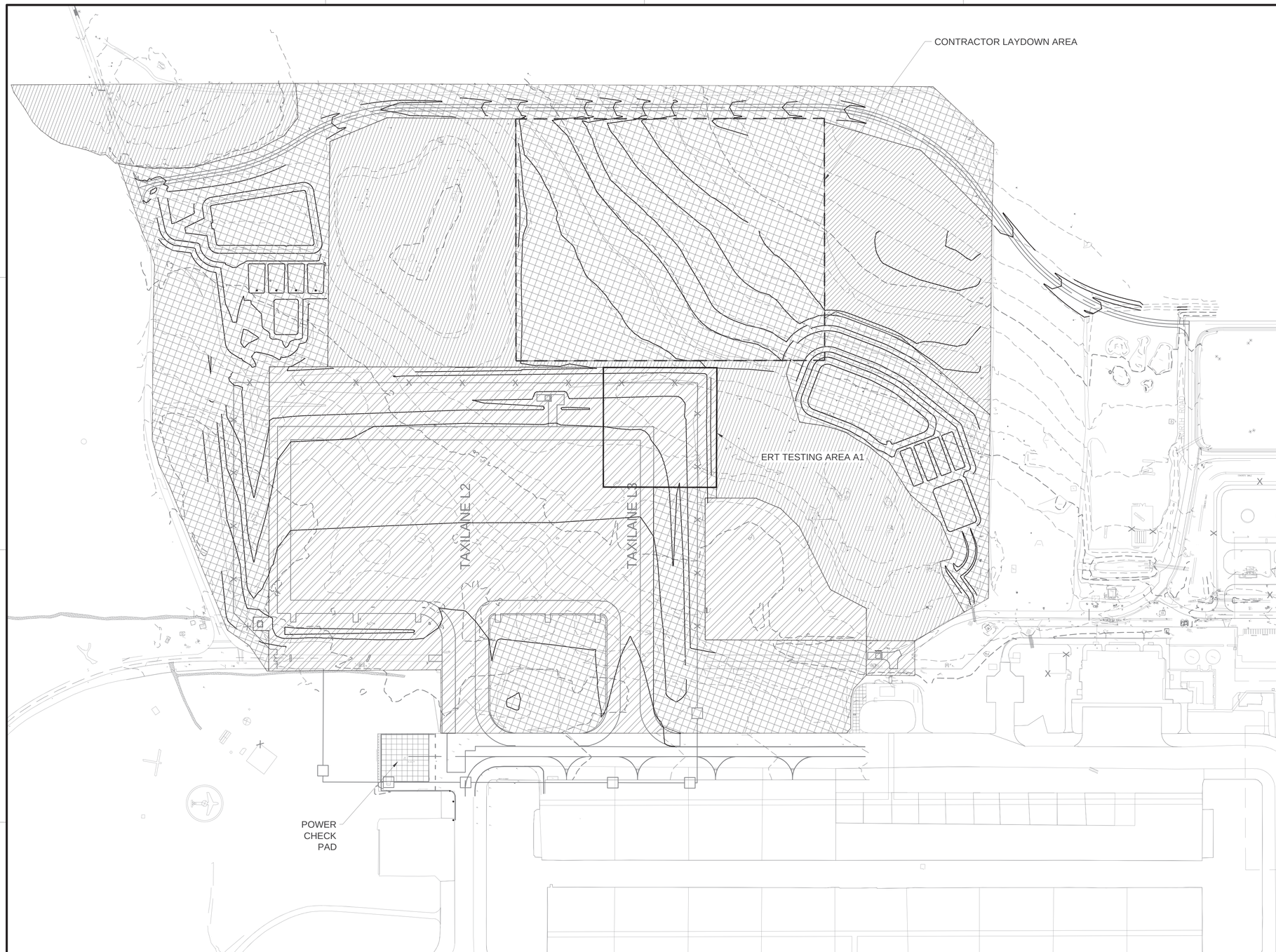

A1 KARST FEATURES PLAN
SCALE: 1" = 200'

GENERAL NOTES

A	HIRE FULL-TIME HYDRO GEOLOGIST (WITH GUAM EPA APPROVED CREDENTIALS), WHO MUST BE PRESENT WHEN EARTHWORK IS BEING PERFORMED.
B	HIRE FULL-TIME GEOTECHNICAL ENGINEER WITH EXPERIENCE IN THE MARIANAS ISLANDS OR HAWAII, WHO MUST BE PRESENT WHEN EARTHWORK IS BEING PERFORMED.
C	FOR AREAS RECEIVING GROUT AS SHOWN ON CG146, STOP GROUTING AT 10CY PER HOLE/PIPE SHAFT/SOLUTION TUBE AND CONTACT THE CONTRACTING OFFICER IF 10CY DID NOT RESULT IN VISIBLE FILLING OF VOID.
D	FOR AREAS RECEIVING GROUT AS SHOWN ON CG146, TOP OFF VOID AFTER 10CY HAS BEEN PLACED DUE TO SETTLING OR IF GROUT DID NOT REACH ADJACENT GROUND SURFACE ELEVATION.
E	SEE KARST FEATURES DETAIL ON CG146 FOR SINKHOLE REPAIR REQUIREMENTS.
F	IF KARST FEATURES ARE FOUND IN THE CONTRACTOR LAYDOWN AREA OR PFAS RELOCATION AREA, NOTIFY THE CONTRACTING OFFICER.

LEGEND

- ZONE 1 - GROUTED SURFACE FEATURES
- ZONE 2 - BOULDER/GRAVEL FEATURES
- ZONE 3 - UNMITIGATED AREA
- PERIMETER OF MAPPED EXISTING SINKHOLE

ID	AREA (ACRE)	MIN. NO. OF ERT LINES	MIN. TOTAL LENGTH OF ERT TESTING (FT)
A1	4.4	10*	5,000*
---	---	---	37,000**

* MINIMUM VALUES INCLUDE EXTENDING ERT TESTING 100-FT BEYOND THE MAPPED EXTENTS OF EXISTING SINKHOLES SHOWN ON THE DRAWINGS, IN ACCORDANCE WITH SPECIFICATION 31 00 00, SUBSECTION 3.3.3, ELECTRICAL RESISTIVITY TOMOGRAPHY (ERT).

** MINIMUM VALUE INDICATES ADDITIONAL ERT TESTING TO BE PERFORMED AT UNMAPPED SINKHOLES AS APPROVED BY THE CONTRACTING OFFICER, AND IN ACCORDANCE WITH SPECIFICATION 31 00 00, SUBSECTION 3.3.3, ELECTRICAL RESISTIVITY TOMOGRAPHY (ERT).

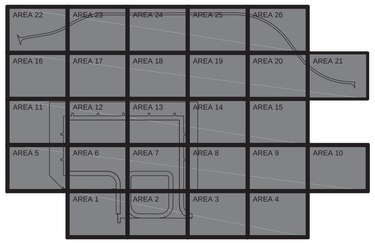

OVERALL
KEY PLAN

GRAPHIC SCALE
0 100' 200' 400'
SCALE: 1"=200'

NORTH ARROW
TRUE N

NAVFAC

STATE OF MISSOURI
NICHOLAS JOSEPH ROTH
PE-2007-026526
PROFESSIONAL ENGINEER
1/27/2026
TEXAS REGISTERED ENGINEERING FIRM F-2966 SEAL

Jacobs / BURNS McDONNELL
JACOBS/B&M, A JOINT VENTURE
1100 NORTH GLEBE ROAD
SUITE 500
ARLINGTON, VA 22201
A/E Contract No. N62742-20-D-0002
A/E Task Order No. N6274221F0315
JCG NO. 03430603
A/E INFO

APPROVED
FOR COMMANDER NAVFAC DATE 02/02/2026

ACTIVITY
AFIMSC APPROVAL PER NAVFAC SAT-TO CHECKLIST
SATISFACTORY TO DATE 31 DEC 2025

DES:	JMH	DRW: SMC	REV: ATM
PM/DM			KKK
BRANCH MANAGER			SMK
CHIEF ENG/ARCH			SMK
FIRE PROTECTION			RO

DEPARTMENT OF THE NAVY
NAVFAC PACIFIC
NAVAL FACILITIES ENGINEERING SYSTEMS COMMAND
NAVAL FACILITIES ENGINEERING SYSTEMS COMMAND – PACIFIC
JOINT REGION MARIANAS (JRM)
ANDERSEN AIR FORCE BASE
GUAM

FY24 AJY183012 (P-012),
PDI: NORTH AIRCRAFT PARKING RAMP
KARST FEATURES PLAN

SCALE: AS SHOWN
EPROJECTS NO.: 1665555
CONSTR CONTROL NO.
NAVFAC DRAWING NO. 17361839
SHEET 216 OF 377
CG144

REDESIGN FINAL SUBMITTAL

IF SHEET IS LESS THAN 22" X 34" REDUCED PRINT. USE GRAPHIC SCALES

FILE NAME: U:\BLDG\NAVFAC Pacific\D3430603 – P-012 North Aircraft Parking Ramp\700 Working Documents\740 Sheets\740.01 Civil\P012_1665555_CG144.dwg
LAYOUT NAME: KARST FEATURES PLAN
PLOTTED: 01/28/2026 12:42pm
USER: CamersS

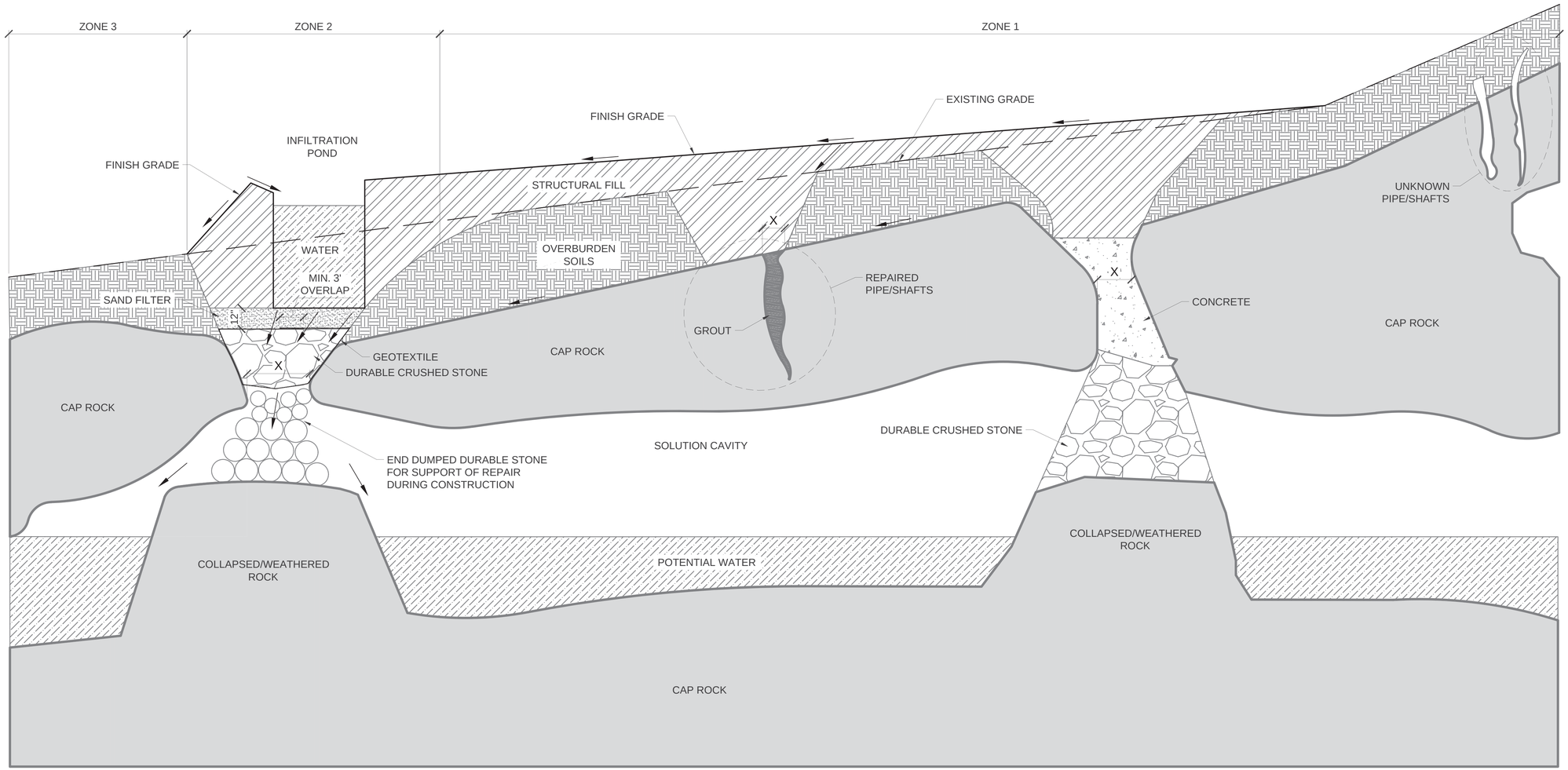

X	WIDTH OF SINKHOLE "THROAT".
<1 FT	PLACE GROUT (SAND-CEMENT) MIXTURE INTO OPEN CAVITY.
1 TO ≤ 3 FT	ZONE 1: PLACE CRUSHED STONE WITH A MINIMUM PARTICLE DIAMETER OF 18 INCHES UP TO THE THROAT OF THE SINKHOLE. CAP WITH LOW SLUMP (4-IN), STRUCTURAL GRADE CONCRETE A MINIMUM OF 3 FEET ABOVE THE THROAT OR THE GROUND SURFACE; WHICHEVER IS LOWER. STONE MUST BE A DURABLE MATERIAL. ZONE 2: END DUMP STONE WITH PARTICLE SIZES RANGING FROM 4 TO 12 INCHES UP TO THE BASE OF THE THROAT OF THE SINKHOLE FOR SUPPORT. A GEOTEXTILE MUST THEN BE PLACED TO LINE THE HOLE. PLACE CRUSHED STONE WITH A MINIMUM PARTICLE DIAMETER OF 18 INCHES OVER GEOTEXTILE, AND FULLY ENCAPSULATED THE CRUSHED STONE BY WRAPPING IT IN GEOTEXTILE. STONE MUST BE A DURABLE MATERIAL. ABOVE THE GEOTEXTILE-ENCAPSULATED CRUSHED STONE LAYER, PLACE A 12-INCH THICK SAND FILTER IN ACCORDANCE WITH SPECIFICATION SECTION 31 00 00 "EARTHWORK".
3 TO 6 FT	ZONE 1: PLACE DURABLE CRUSHED STONE RANGING FROM 24 TO 36 INCHES UP TO THE THROAT OF THE SINKHOLE. CAP WITH LOW SLUMP (4-IN), STRUCTURAL GRADE CONCRETE A MINIMUM OF 4 FEET ABOVE THE THROAT OR THE GROUND SURFACE; WHICHEVER IS LOWER. CLEAN STONE, DEFINED AS A DURABLE STONE WITH 6 PERCENT FINES OR LESS AT THE TIME OF PLACEMENT, WITH DIAMETERS RANGING FROM 6 TO 18 INCHES CAN BE PLACED IN WET CONCRETE TO REDUCE THE REQUIRED VOLUME OF CONCRETE TO FACILITATE THE CONSTRUCTION OF IMPERMEABLE STRUCTURAL CONCRETE CAP. ZONE 2: END DUMP STONE WITH PARTICLE SIZES RANGING FROM 8 TO 16 INCHES UP TO THE BASE OF THE THROAT OF THE SINKHOLE FOR SUPPORT. A GEOTEXTILE MUST THEN BE PLACED TO LINE THE HOLE. PLACE CRUSHED STONE WITH A MINIMUM PARTICLE DIAMETER OF 24 INCHES OVER GEOTEXTILE, AND FULLY ENCAPSULATED THE CRUSHED STONE BY WRAPPING IT IN GEOTEXTILE. STONE MUST BE A DURABLE MATERIAL. ABOVE THE GEOTEXTILE-ENCAPSULATED CRUSHED STONE LAYER, PLACE A 12-INCH THICK SAND FILTER IN ACCORDANCE WITH SPECIFICATION SECTION 31 00 00 "EARTHWORK".
> 6 FT	THE CONTRACTOR'S HYDROGEOLOGIST/GEOTECHNICAL ENGINEER MUST SUBMIT A KARST REPAIR METHODOLOGY TO THE CONTRACTING OFFICER ENTITLED "KARST FEATURE REPAIR METHODOLOGY AND HYDROGEOLOGIC ASSESSMENT REPORT". THE METHODOLOGY MUST BE BASED ON AND INDICATE THE REPAIR TYPE ZONE SHOWN ON CG144 AND CG145 THAT IS REQUIRED TO GUARANTEE THE PROJECT'S DESIGN. THE METHODOLOGY MUST ALSO INCLUDE THE ERT DATA REPORT ENTITLED "SUBSURFACE EXTENTS OF KARST FEATURES REPORT" DELINEATING THE SUBSURFACE EXTENTS OF THE FEATURE, AND THE DIMENSIONS AND THE LOCATION OF THE FEATURE AND OTHER REQUIREMENTS AS INDICATED IN SPECIFICATION SECTION 31 00 00 "EARTHWORK" PARAGRAPH 3.3.3. UPON REVIEW OF THE PROPOSED REPAIR METHODOLOGY BY THE CONTRACTING OFFICER, THE DOR AND GEPA, A REPAIR METHOD WILL BE ISSUED TO THE CONTRACTOR.

A1 KARST FEATURES DETAIL
SCALE: N.T.S.

REV	REVISED DETAIL	01/26/2026

NAVFAC

STATE OF MISSOURI
NICHOLAS JOSEPH SCOTT
PE-2009002828
PROFESSIONAL ENGINEER
1/27/2026
TEXAS REGISTERED ENGINEERING FIRM F-2966 SEAL

Jacobs / BURNS McDONNELL
JACOBS/B&M, A JOINT VENTURE
1100 NORTH GLEBE ROAD
SUITE 500
ARLINGTON, VA 22201
A/E Contract No. N62742-20-D-0002
A/E Task Order No. N6274221F0315
JCG NO. 03430603
A/E INFO

APPROVED
FOR COMMANDER NAVFAC DATE 02/02/2026

ACTIVITY
SATISFACTORY TO DATE 31 DEC 2025

DES: JMH	DRW: SMC	REV: ATM
PM/DM	KKK	
BRANCH MANAGER	SMK	
CHIEF ENG/ARCH	SMK	
FIRE PROTECTION	RO	

DEPARTMENT OF THE NAVY
NAVAL FACILITIES ENGINEERING SYSTEMS COMMAND
NAVFAC PACIFIC
NAVAL FACILITIES ENGINEERING SYSTEMS COMMAND – PACIFIC
JOINT REGION MARIANAS (JRM)
ANDERSEN AIR FORCE BASE
GUAM

FY24 AJJY183012 (P-012),
PDI: NORTH AIRCRAFT PARKING RAMP
KARST FEATURES DETAIL

SCALE: AS SHOWN
EPROJECTS NO.: 1665555
CONSTR CONTROL NO.
NAVFAC DRAWING NO. 17361841
SHEET 218 OF 377
CG146

REDESIGN FINAL SUBMITTAL

IF SHEET IS LESS THAN 22" X 34" REDUCED PRINT. USE GRAPHIC SCALES

FILE NAME: U:\BLDG\NAVFAC Pacific\D3430603 – P-012 North Aircraft Parking Ramp\700 Working Documents\740 Sheets\740.01 Civil\P012_1665555_CG146.dwg
LAYOUT NAME: KARST FEATURES DETAIL
PLOTTED: 01/27/2026 3:55pm
USER: CamerosS

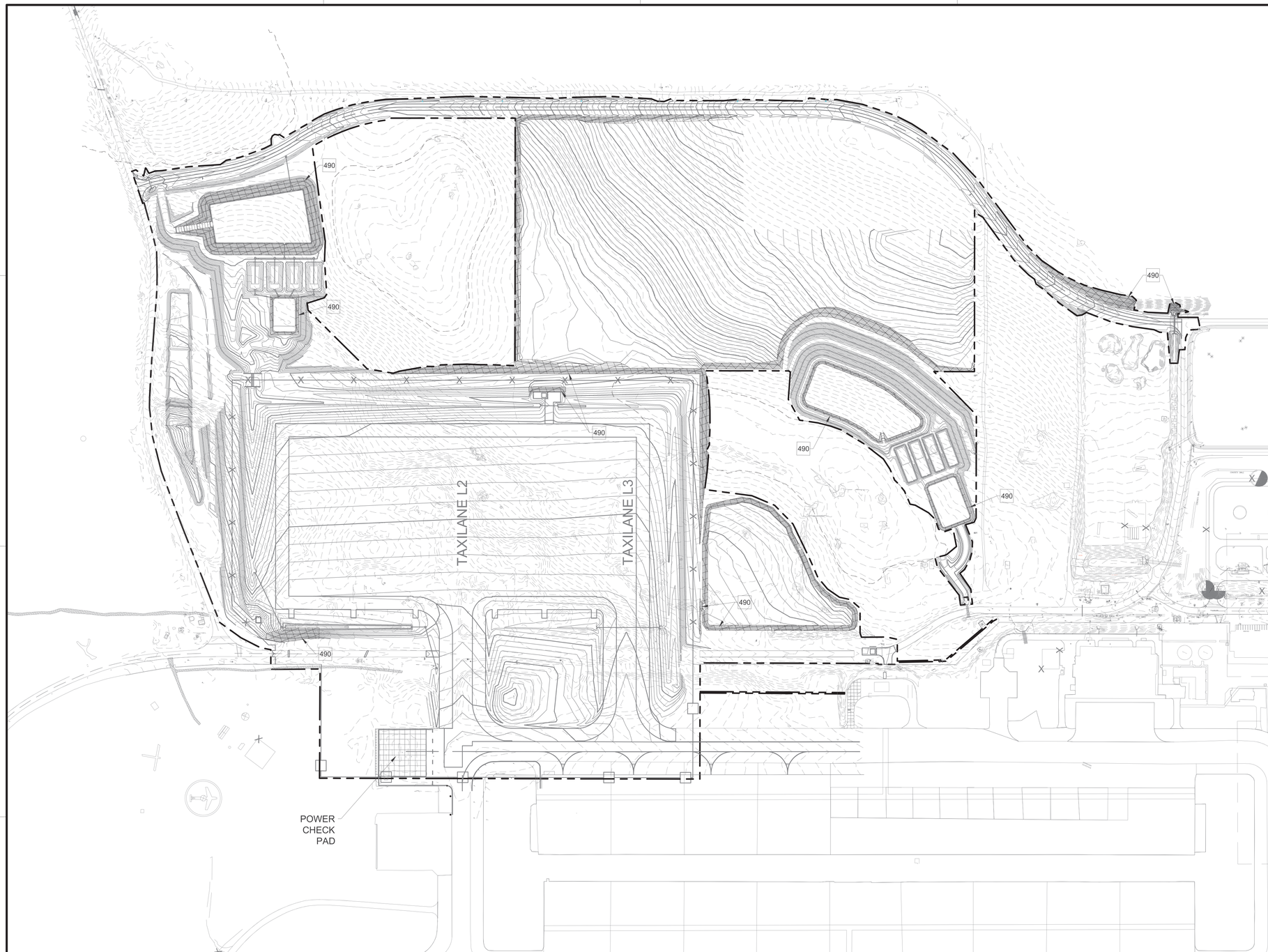

A1 TURF REINFORCEMENT PLAN
SCALE: 1" = 200'

GENERAL NOTES

A	REFER TO SHEETS CG101 - CG127 FOR GRADING AND DRAINAGE PLANS.
B	CONTOURS ARE AT 1' INTERVALS
C	INSTALL TURF REINFORCEMENT MATTING ON SLOPES 3:1 AND STEEPER.

KEYNOTES

490	TURF REINFORCEMENT MATTING, RE: C1/CG503

LEGEND

TURF REINFORCEMENT MATTING, RE: B1/CG503

MAJOR CONTOUR

EXISTING CONTOUR

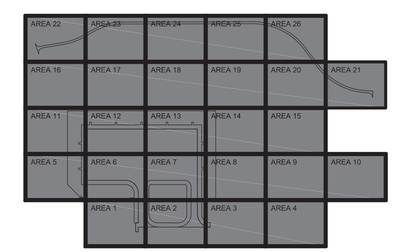

OVERALL KEY PLAN

GRAPHIC SCALE

0 100' 200' 400'

SCALE: 1"=200'

NORTH ARROW

TRUE N

NAVFAC

STATE OF TEXAS
JENNIFER M. HAYNES
90167
LICENSED
PROFESSIONAL ENGINEER
1/27/2026
TEXAS REGISTERED ENGINEERING FIRM F-3966 SEAL

Jacobs / BURNS McDONNELL
JACOBS/B&M, A JOINT VENTURE
1100 NORTH GLEBE ROAD
SUITE 500
ARLINGTON, VA 22201

A/E Contract No. N62742-20-D-0002
A/E Task Order No. N62742219 0315
JCG NO. 03430603 A/E INFO

APPROVED
FOR COMMANDER NAVFAC DATE 02/02/2026

ACTIVITY
AFIMSC APPROVAL PER NAVFAC SAT-TO CHECKLIST

SATISFACTORY TO DATE 31 DEC 2025

DES:	JMH	DRW:	SMC	REV:	ATM
PM/DM					KKK
BRANCH MANAGER					SMK
CHIEF ENG/ARCH					SMK
FIRE PROTECTION					RO

DEPARTMENT OF THE NAVY
NAVFAC PACIFIC
NAVAL FACILITIES ENGINEERING SYSTEMS COMMAND
NAVAL FACILITIES ENGINEERING SYSTEMS COMMAND ~ PACIFIC
JOINT REGION MARIANAS (JRM)
ANDERSEN AIR FORCE BASE
GUAM

FY24 AUY183012 (P-012),
PDI: NORTH AIRCRAFT PARKING RAMP

TURF REINFORCEMENT PLAN

SCALE: AS SHOWN
EPROJECTS NO.: 1665555
CONSTR CONTROL NO.
NAVFAC DRAWING NO. 17361842
SHEET 219 OF 377

CG147

REDESIGN FINAL SUBMITTAL

IF SHEET IS LESS THAN 22" X 34" REDUCED PRINT. USE GRAPHIC SCALES

FILE NAME: U:\BLDG\NAVFAC Pacific\03430603 - P-012 North Aircraft Parking Ramp\700 Working Documents\740 Sheets\740.01 Civil\P012_1665555_CG147.dwg
LAYOUT NAME: TURF REINFORCEMENT PLAN
PLOTTED: 01/27/2026 11:27pm
USER: CamarcS

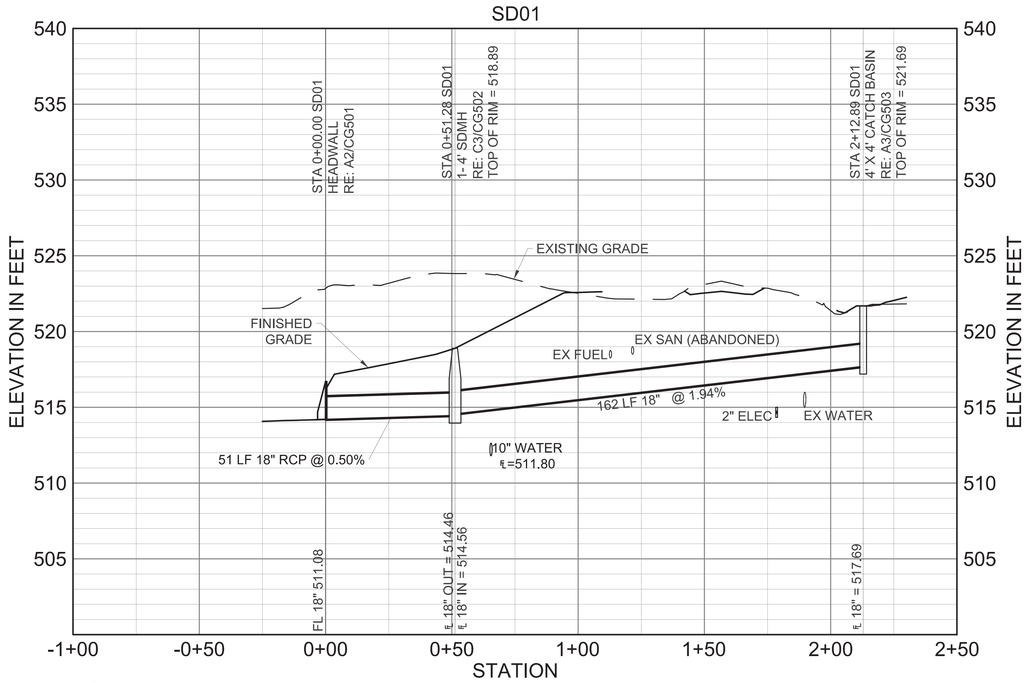

C1 DRAINAGE PROFILES - SD01
SCALE: HORIZONTAL 1" = 30'
VERTICAL 1" = 5'

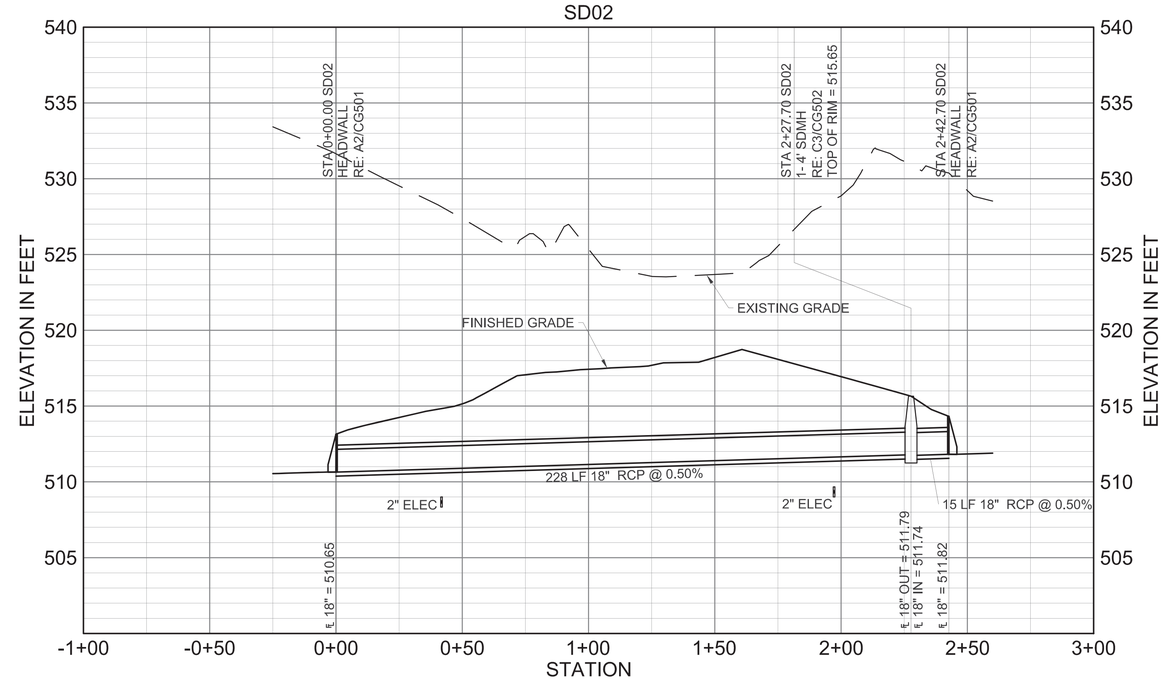

C3 DRAINAGE PROFILES - SD02
SCALE: HORIZONTAL 1" = 30'
VERTICAL 1" = 5'

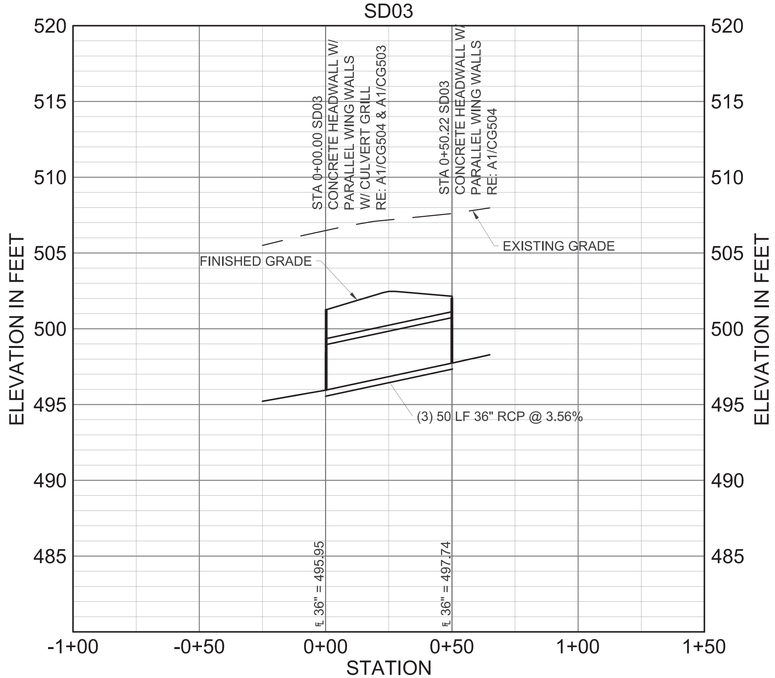

A1 DRAINAGE PROFILES - SD03
SCALE: HORIZONTAL 1" = 30'
VERTICAL 1" = 5'

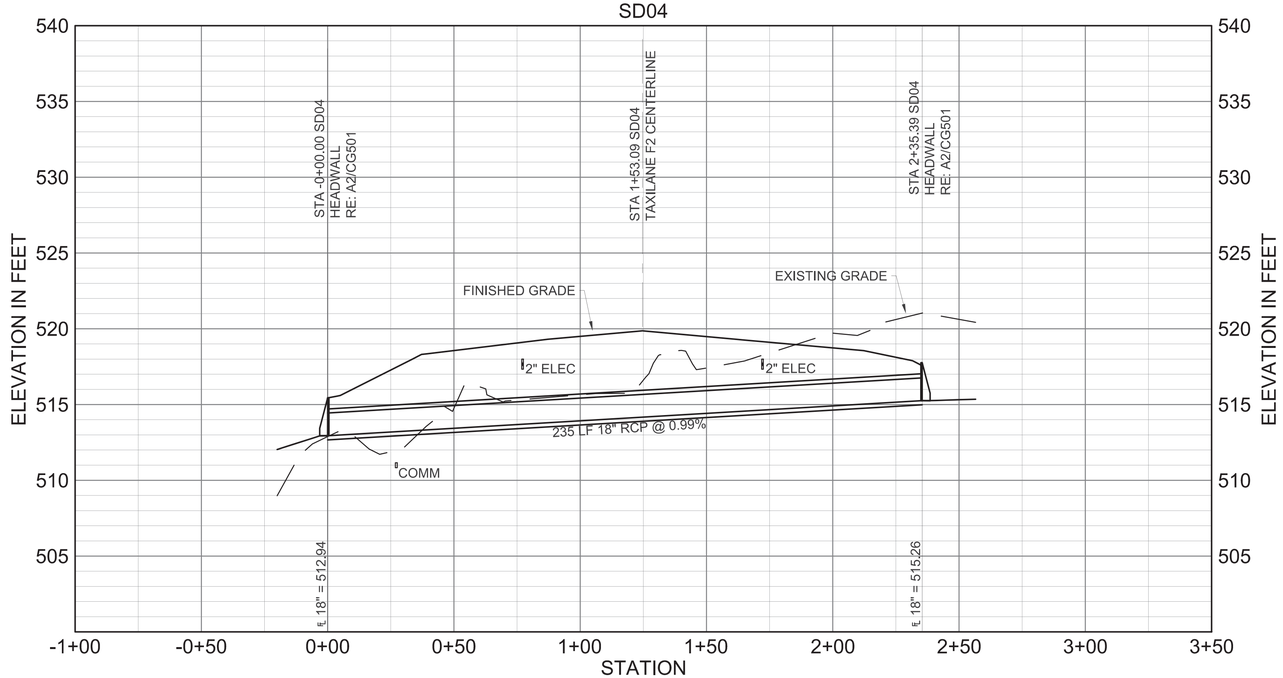

A3 DRAINAGE PROFILES - SD04
SCALE: HORIZONTAL 1" = 30'
VERTICAL 1" = 5'

0 2.5' 5' 10'
VERTICAL SCALE: 1"=5'

0 15' 30' 60'
HORIZONTAL SCALE: 1"=30'

IF SHEET IS LESS THAN 22" X 34"
REDUCED PRINT. USE GRAPHIC SCALES

NAVFAC

STATE OF TEXAS
JENNIFER M. HAYNES
90167
LICENSED
PROFESSIONAL ENGINEER
1/20/2026
TEXAS REGISTERED ENGINEERING FIRM F-3966 SEAL

Jacobs / BURNS & McDONNELL
JACOBS/B&M, A JOINT VENTURE
1100 NORTH GLEBE ROAD
SUITE 500
ARLINGTON, VA 22201

A/E Contract No. N62742-20-D-0002
A/E Task Order No. N62742-21F0315
JCG NO. 03430603
A/E INFO

APPROVED
FOR COMMANDER NAVFAC DATE 02/02/2026

ACTIVITY
AFIMSC APPROVAL PER NAVFAC SAT-TO CHECKLIST

SATISFACTORY TO DATE 31 DEC 2025

DES:	JMH	DRW:	SMC	REV:	ATM
PM/DM					KKK
BRANCH MANAGER					SMK
CHIEF ENG/ARCH					SMK
FIRE PROTECTION					RO

DEPARTMENT OF THE NAVY
NAVFAC PACIFIC
NAVAL FACILITIES ENGINEERING SYSTEMS COMMAND
NAVAL FACILITIES ENGINEERING SYSTEMS COMMAND – PACIFIC
JOINT REGION MARIANAS (JRM)
ANDERSEN AIR FORCE BASE
GUAM

FY24 AJJY183012 (P-012),
PDI: NORTH AIRCRAFT PARKING RAMP

DRAINAGE PROFILES

SCALE: AS SHOWN
EPROJECTS NO.: 1665555
CONSTR CONTROL NO.
NAVFAC DRAWING NO. 17361844
SHEET 221 OF 377

CG201

REDESIGN FINAL SUBMITTAL

FILE NAME: U:\BLDG\NAVFAC Pacific\03430603 - P-012 North Aircraft Parking Ramp\700 Working Documents\740 Sheets\740.01 Civil\P012_1665555_CG201.dwg
LAYOUT NAME: DRAINAGE PROFILES
PLOTTED: 01/15/2026 4:46pm
USER: CamersS

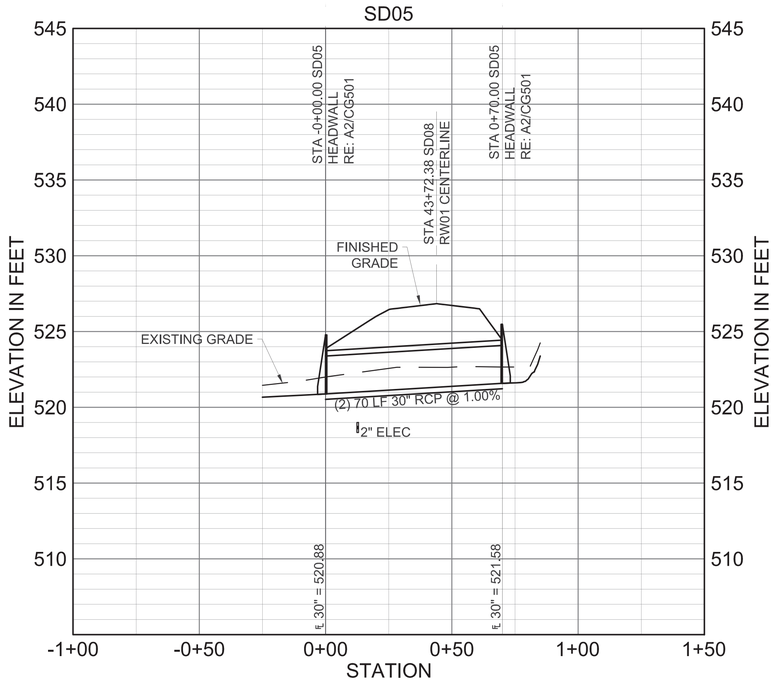

C3 DRAINAGE PROFILES - SD05
SCALE: HORIZONTAL 1" = 30'
VERTICAL 1" = 5'

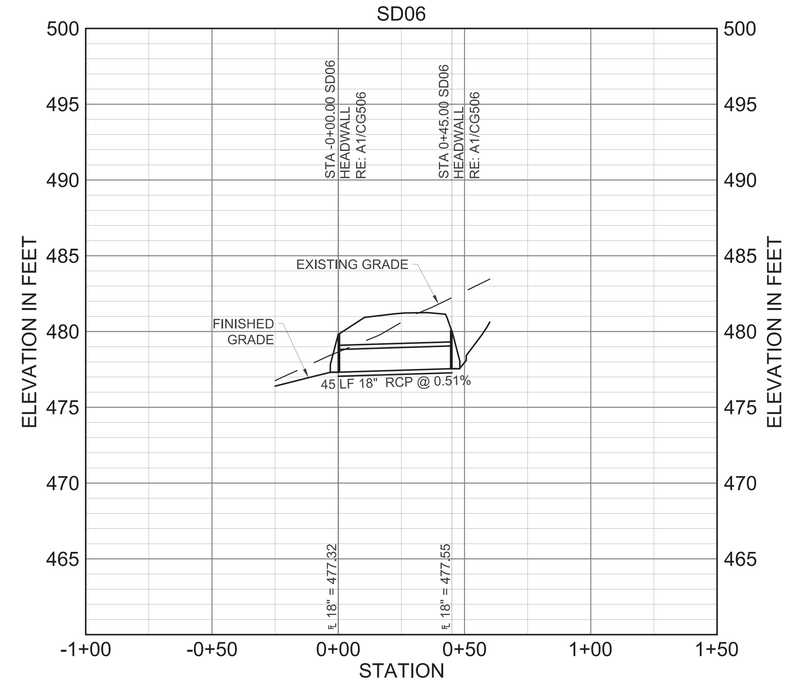

C4 DRAINAGE PROFILES - SD06
SCALE: HORIZONTAL 1" = 30'
VERTICAL 1" = 5'

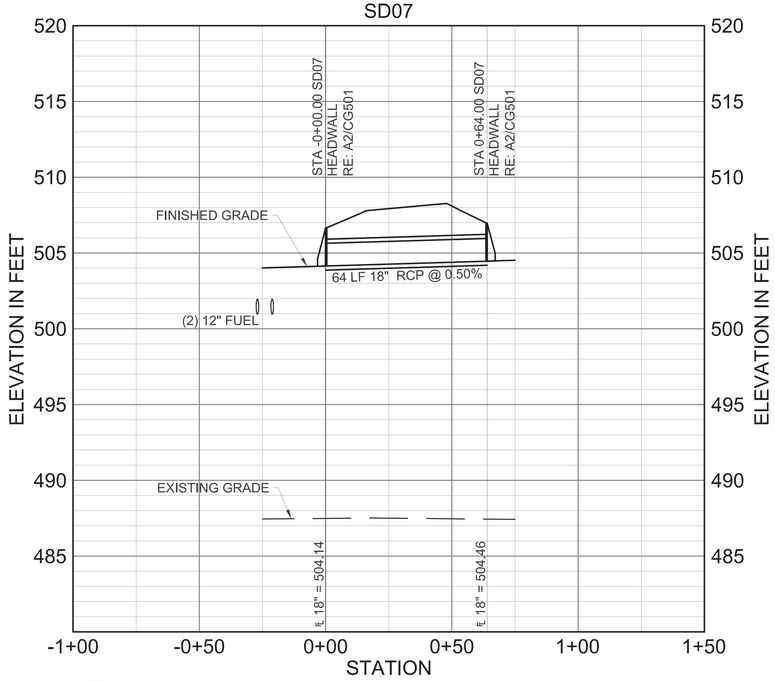

A1 DRAINAGE PROFILES - SD07
SCALE: HORIZONTAL 1" = 30'
VERTICAL 1" = 5'

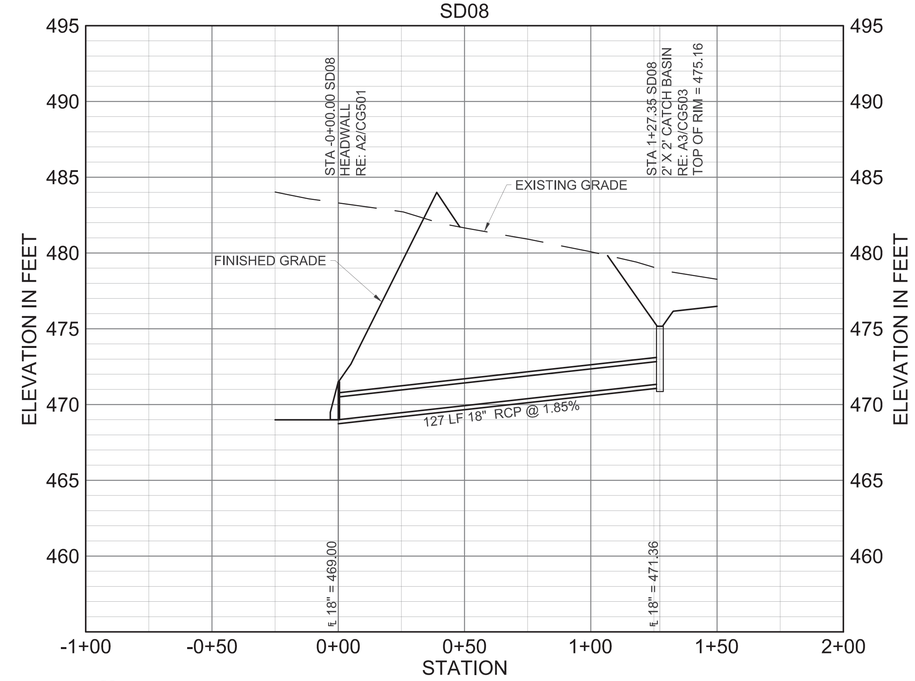

A4 DRAINAGE PROFILES - SD08
SCALE: HORIZONTAL 1" = 30'
VERTICAL 1" = 5'

0 2.5' 5' 10'
VERTICAL SCALE: 1"=5'

0 15' 30' 60'
HORIZONTAL SCALE: 1"=30'

NAVFAC

STATE OF TEXAS
JENNIFER M. HAYNES
90167
LICENSED
PROFESSIONAL ENGINEER
1/20/2026
TEXAS REGISTERED ENGINEERING FIRM F-3566 SEAL

Jacobs / BURNS McDONNELL
JACOBS/B&M, A JOINT VENTURE
1100 NORTH GLEBE ROAD
SUITE 500
ARLINGTON, VA 22201

A/E Contract No. N62742-20-D-0002
A/E Task Order No. N62742-21F-0315
JCG NO. 03430603
A/E INFO

APPROVED
FOR COMMANDER NAVFAC DATE 02/02/2026

ACTIVITY
AFIMSC APPROVAL PER NAVFAC SAT-TO CHECKLIST

SATISFACTORY TO DATE 31 DEC 2025

DES: JMH	DRW: SMC	REV: ATM
PM/DM		KKK
BRANCH MANAGER		SMK
CHIEF ENG/ARCH		SMK
FIRE PROTECTION		RO

DEPARTMENT OF THE NAVY
NAVFAC PACIFIC
NAVAL FACILITIES ENGINEERING SYSTEMS COMMAND
NAVAL FACILITIES ENGINEERING SYSTEMS COMMAND – PACIFIC
JOINT REGION MARIANAS (JRM)
ANDERSEN AIR FORCE BASE
GUAM

FY24 AJJY183012 (P-012),
PDI: NORTH AIRCRAFT PARKING RAMP

DRAINAGE PROFILES

SCALE: AS SHOWN
EPROJECTS NO.: 1665555
CONSTR CONTROL NO.
NAVFAC DRAWING NO. 17361845
SHEET 222 OF 377

CG202

REDESIGN FINAL SUBMITTAL

IF SHEET IS LESS THAN 22" X 34" REDUCED PRINT. USE GRAPHIC SCALES

FILE NAME: U:\BLDG\NAVFAC Pacific\03430603 - P-012 North Aircraft Parking Ramp\700 Working Documents\740 Sheets\740.01 Civil\P012_1665555_CG202.dwg
LAYOUT NAME: DRAINAGE PROFILES
PLOTTED: 01/15/2026 4:46pm
USER: CamersS

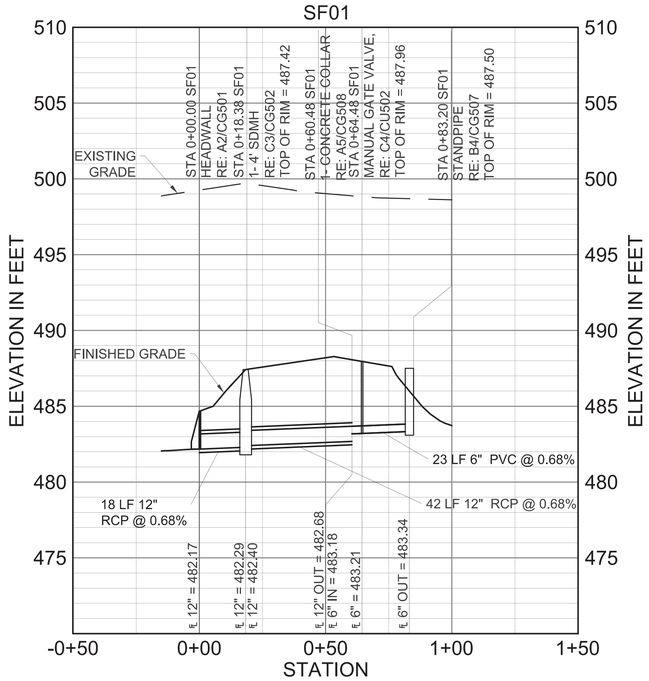

C1 DRAINAGE PROFILES - SF01
SCALE: HORIZONTAL 1" = 30'
VERTICAL 1" = 5'

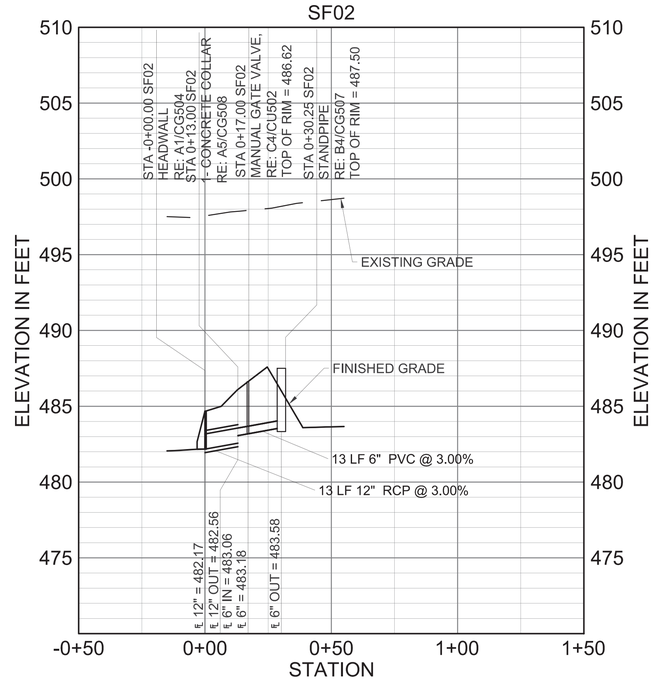

C3 DRAINAGE PROFILES - SF02
SCALE: HORIZONTAL 1" = 30'
VERTICAL 1" = 5'

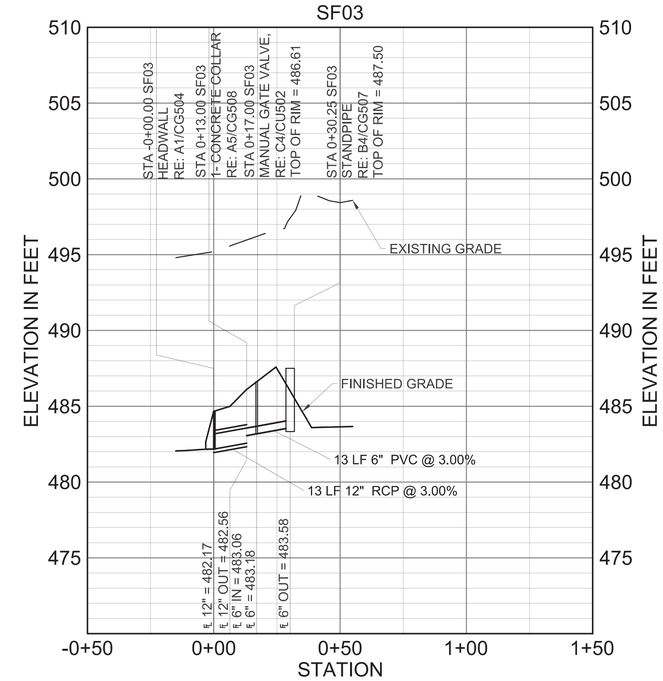

C4 DRAINAGE PROFILES - SF03
SCALE: HORIZONTAL 1" = 30'
VERTICAL 1" = 5'

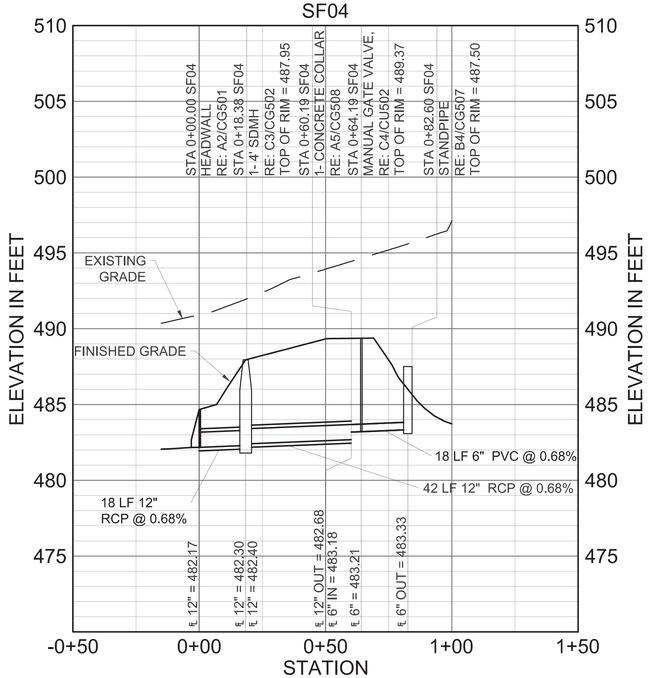

A1 DRAINAGE PROFILES - SF04
SCALE: HORIZONTAL 1" = 30'
VERTICAL 1" = 5'

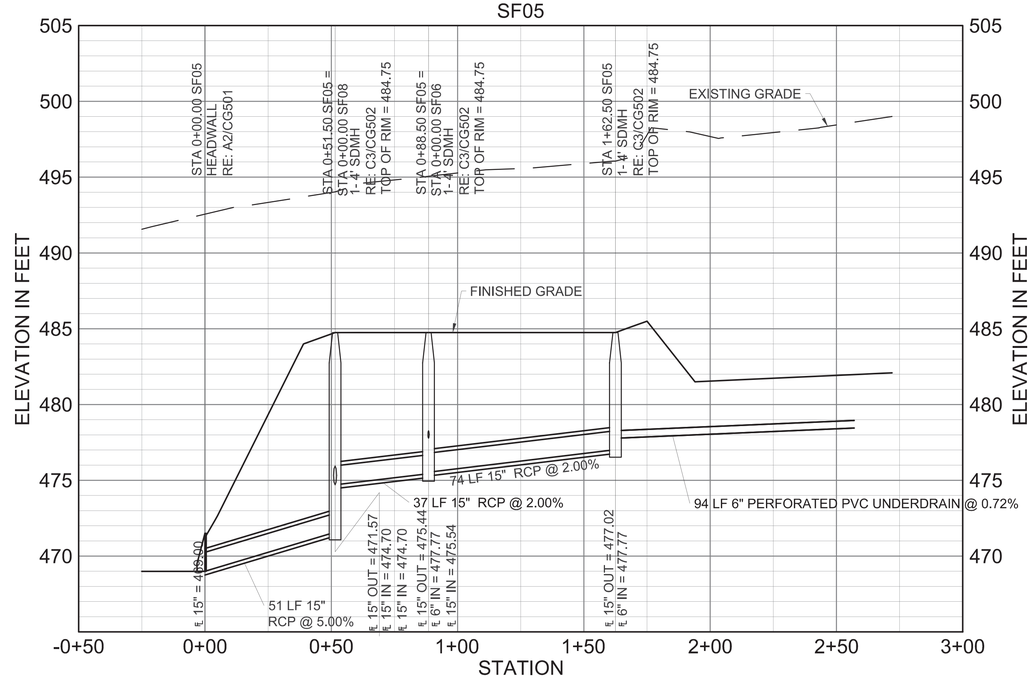

A3 DRAINAGE PROFILES - SF05
SCALE: HORIZONTAL 1" = 30'
VERTICAL 1" = 5'

0 2.5' 5' 10'
VERTICAL SCALE: 1"=5'

0 15' 30' 60'
HORIZONTAL SCALE: 1"=30'

NAVFAC

STATE OF TEXAS
JENNIFER M. HAYNES
90167
LICENSED
PROFESSIONAL ENGINEER
1/20/2026
TEXAS REGISTERED ENGINEERING FIRM F-3566 SEAL

Jacobs / BURNS & McDONNELL
JACOBS/B&M, A JOINT VENTURE
1100 NORTH GLEBE ROAD
SUITE 500
ARLINGTON, VA 22201

A/E Contract No. N62742-20-D-0002
A/E Task Order No. N62742-21F0315
JCG NO. 0343603 A/E INFO

APPROVED
FOR COMMANDER NAVFAC DATE 02/02/2026

ACTIVITY
AFIMSC APPROVAL PER NAVFAC SAT-TO CHECKLIST

SATISFACTORY TO DATE 31 DEC 2025

DES:	JMH	DRW:	SMC	REV:	ATM
PM/DM					KKK
BRANCH MANAGER					SMK
CHIEF ENG/ARCH					SMK
FIRE PROTECTION					RO

DEPARTMENT OF THE NAVY
NAVAL FACILITIES ENGINEERING SYSTEMS COMMAND
NAVFAC PACIFIC
NAVAL FACILITIES ENGINEERING SYSTEMS COMMAND – PACIFIC
JOINT REGION MARIANAS (JRM)
ANDERSEN AIR FORCE BASE
GUAM

FY24 AJJY183012 (P-012),
PDI: NORTH AIRCRAFT PARKING RAMP

DRAINAGE PROFILES

SCALE: AS SHOWN
EPROJECTS NO.: 1665555
CONSTR CONTROL NO.
NAVFAC DRAWING NO. 17361846
SHEET 223 OF 377

CG203

REDESIGN FINAL SUBMITTAL

IF SHEET IS LESS THAN 22" X 34"
REDUCED PRINT. USE GRAPHIC SCALES

FILE NAME: U:\BLDG\NAVFAC Pacific\D3430603 – P-012 North Aircraft Parking Ramp\700 Working Documents\740 Sheets\740.01 Civil\P012_1665555_CG203.dwg
LAYOUT NAME: DRAINAGE PROFILES
PLOTTED: 01/15/2026 4:47pm
USER: CamersS

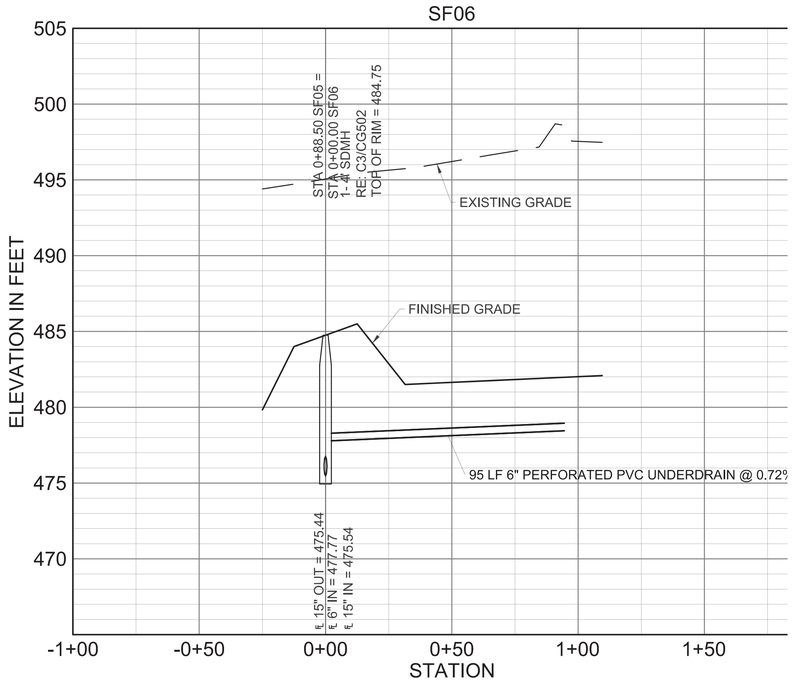

C1 DRAINAGE PROFILES - SF06
SCALE: HORIZONTAL 1" = 30'
VERTICAL 1" = 5'

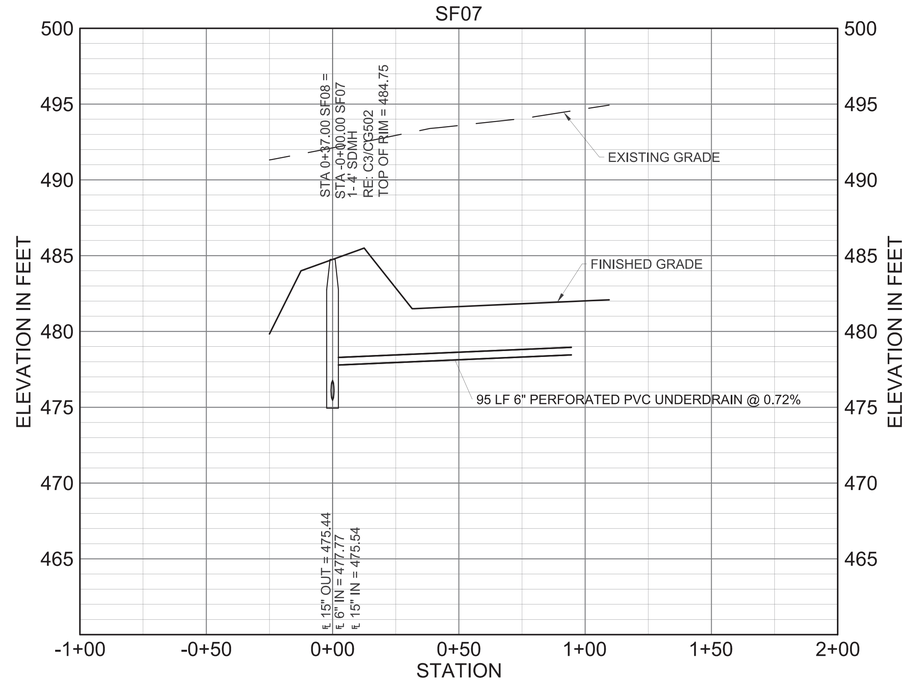

C3 DRAINAGE PROFILES - SF07
SCALE: HORIZONTAL 1" = 30'
VERTICAL 1" = 5'

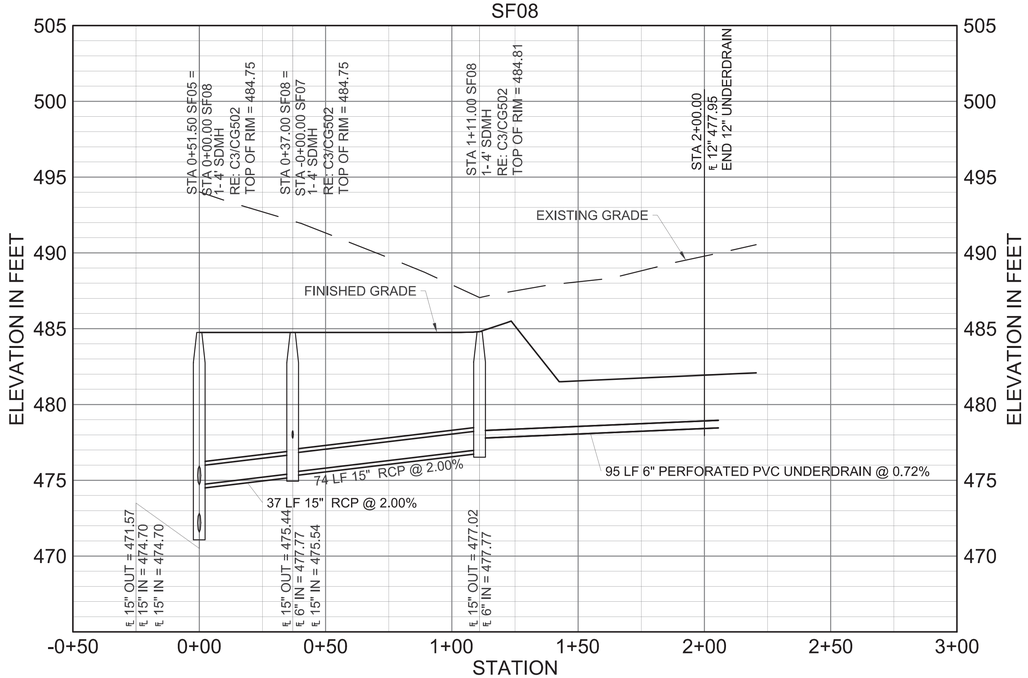

A1 DRAINAGE PROFILES - SF08
SCALE: HORIZONTAL 1" = 30'
VERTICAL 1" = 5'

0 2.5' 5' 10'
VERTICAL SCALE: 1"=5'

0 15' 30' 60'
HORIZONTAL SCALE: 1"=30'

NAVFAC

STATE OF TEXAS
JENNIFER M. HAYNES
90167
LICENSED
PROFESSIONAL ENGINEER
1/20/2026
TEXAS REGISTERED ENGINEERING FIRM F-3966 SEAL

Jacobs / BURNS McDONNELL
JACOBS/B&M, A JOINT VENTURE
1100 NORTH GLEBE ROAD
SUITE 500
ARLINGTON, VA 22201

A/E Contract No. N62742-20-D-0002
A/E Task Order No. N62742219 0315
JCG NO. 03430603
A/E INFO

APPROVED
FOR COMMANDER NAVFAC DATE 02/02/2026

ACTIVITY
AFIMSC APPROVAL PER NAVFAC SAT-TO CHECKLIST

SATISFACTORY TO DATE 31 DEC 2025

DES:	JMH	DRW:	SMC	REV:	ATM
PM/DM					KKK
BRANCH MANAGER					SMK
CHIEF ENG/ARCH					SMK
FIRE PROTECTION					RO

DEPARTMENT OF THE NAVY
NAVAL FACILITIES ENGINEERING SYSTEMS COMMAND
NAVFAC PACIFIC
NAVAL FACILITIES ENGINEERING SYSTEMS COMMAND ~ PACIFIC
JOINT REGION MARIANAS (JRM)
ANDERSEN AIR FORCE BASE
GUAM

FY24 AJJY183012 (P-012),
PDI: NORTH AIRCRAFT PARKING RAMP

DRAINAGE PROFILES

SCALE: AS SHOWN
EPROJECTS NO.: 1665555
CONSTR CONTROL NO.
NAVFAC DRAWING NO. 17361847
SHEET 224 OF 377

CG204

REDESIGN FINAL SUBMITTAL

IF SHEET IS LESS THAN 22" X 34"
REDUCED PRINT. USE GRAPHIC SCALES

FILE NAME: U:\BLDG\NAVFAC Pacific\03430603 - P-012 North Aircraft Parking Ramp\700 Working Documents\740 Sheets\740.01 Civil\P012_1665555_CG204.dwg
LAYOUT NAME: DRAINAGE PROFILES
PLOTTED: 01/15/2026 4:47pm
USER: CamersS

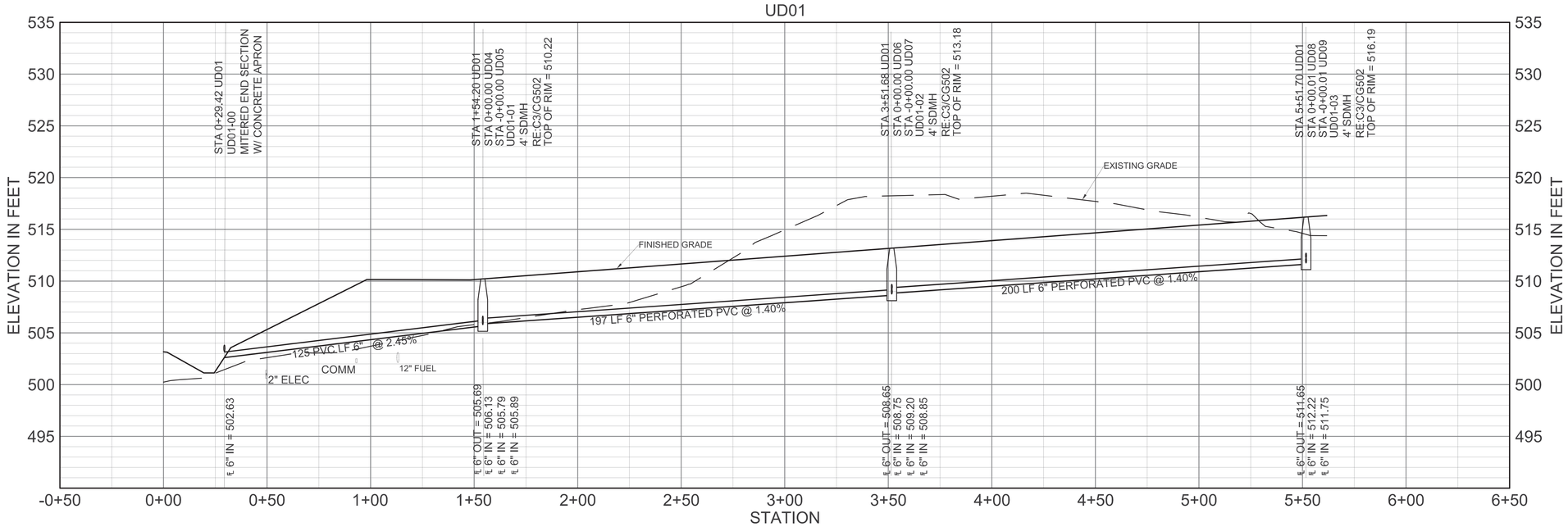

C1 DRAINAGE PROFILES - UD01

SCALE: HORIZONTAL 1" = 30'
VERTICAL 1" = 6'

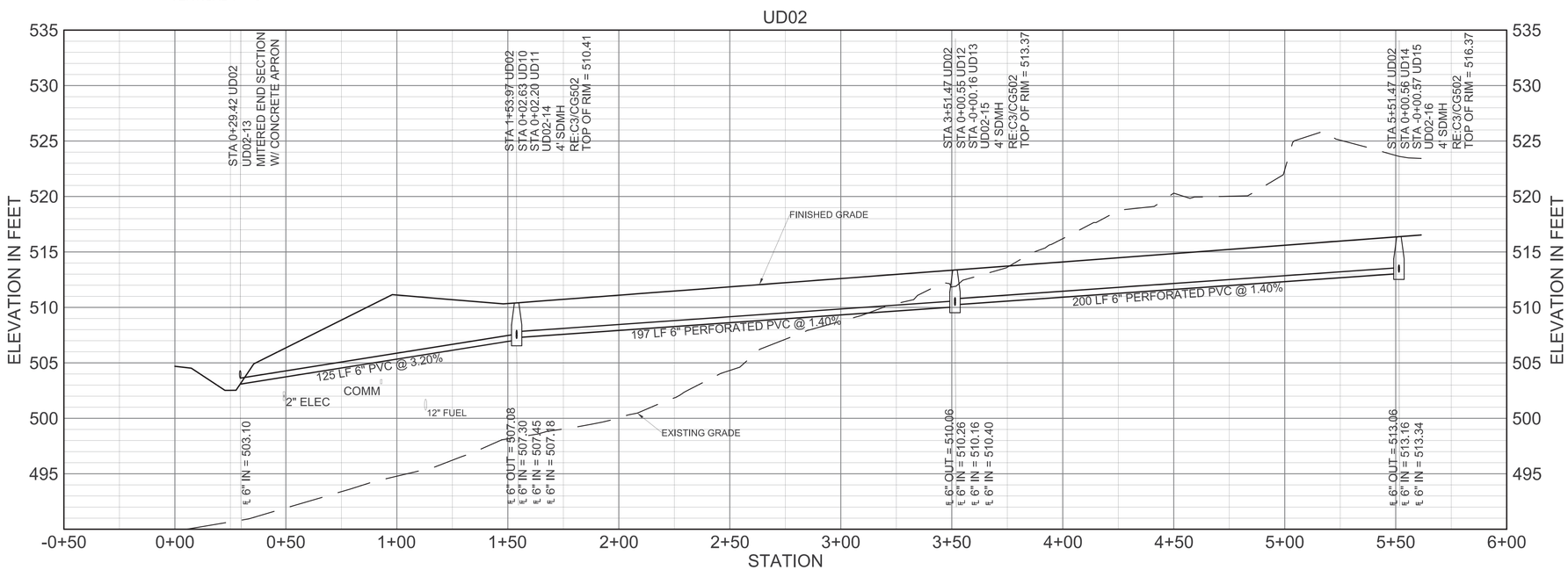

A1 DRAINAGE PROFILES - UD02

SCALE: HORIZONTAL 1" = 30'
VERTICAL 1" = 6'

VERTICAL SCALE: 1"=6' (0, 3', 6', 12')

HORIZONTAL SCALE: 1"=30' (0, 15', 30', 60')

IF SHEET IS LESS THAN 22" X 34"
REDUCED PRINT. USE GRAPHIC SCALES

NAVFAC

STATE OF TEXAS
JENNIFER M. HAYNES
90167
LICENSED
PROFESSIONAL ENGINEER
1/20/2026
TEXAS REGISTERED ENGINEERING FIRM F-3566 SEAL

Jacobs / BURNS McDONNELL
JACOBS/B&M, A JOINT VENTURE
1100 NORTH GLEBE ROAD
SUITE 500
ARLINGTON, VA 22201

A/E Contract No. N62742-20-D-0002
A/E Task Order No. N6274221F0315
JCG NO. 03430603
A/E INFO

APPROVED
FOR COMMANDER NAVFAC DATE 02/02/2026

ACTIVITY
AFIMSC APPROVAL PER NAVFAC SAT-TO CHECKLIST

SATISFACTORY TO DATE 31 DEC 2025

DES: JMH	DRW: SMC	REV: ATM
PM/OM		KKK
BRANCH MANAGER		SMK
CHIEF ENG/ARCH		SMK
FIRE PROTECTION		RO

DEPARTMENT OF THE NAVY
NAVFAC PACIFIC
ANDERSEN AIR FORCE BASE
NAVAL FACILITIES ENGINEERING SYSTEMS COMMAND
NAVAL FACILITIES ENGINEERING SYSTEMS COMMAND ~ PACIFIC
JOINT REGION MARIANAS (JRM)
GUAM

FY24 AUJY183012 (P-012)
PDI: NORTH AIRCRAFT PARKING RAMP

DRAINAGE PROFILES

SCALE: AS SHOWN
EPROJECTS NO.: 1665555
CONSTR CONTROL NO.
NAVFAC DRAWING NO. 17361848
SHEET 225 OF 377

CG205

REDESIGN FINAL SUBMITTAL

FILE NAME: U:\BLDG\NAVFAC Pacific\03430603 - P-012 North Aircraft Parking Ramp\700 Working Documents\740 Sheets\740.01 Civil\P012_1665555_CG205.dwg
LAYOUT NAME: DRAINAGE PROFILES
PLOTTED: 01/15/2026 4:48pm
USER: CamersS

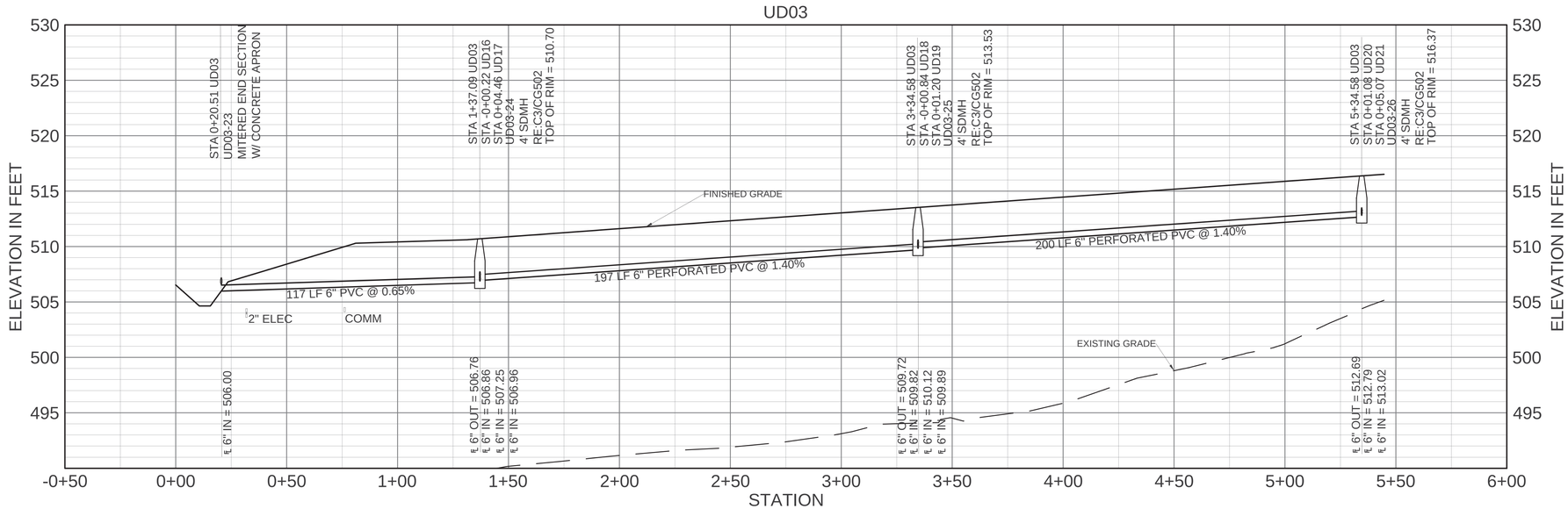

A1 DRAINAGE PROFILES - UD03

SCALE: HORIZONTAL 1" = 30'
VERTICAL 1" = 6'

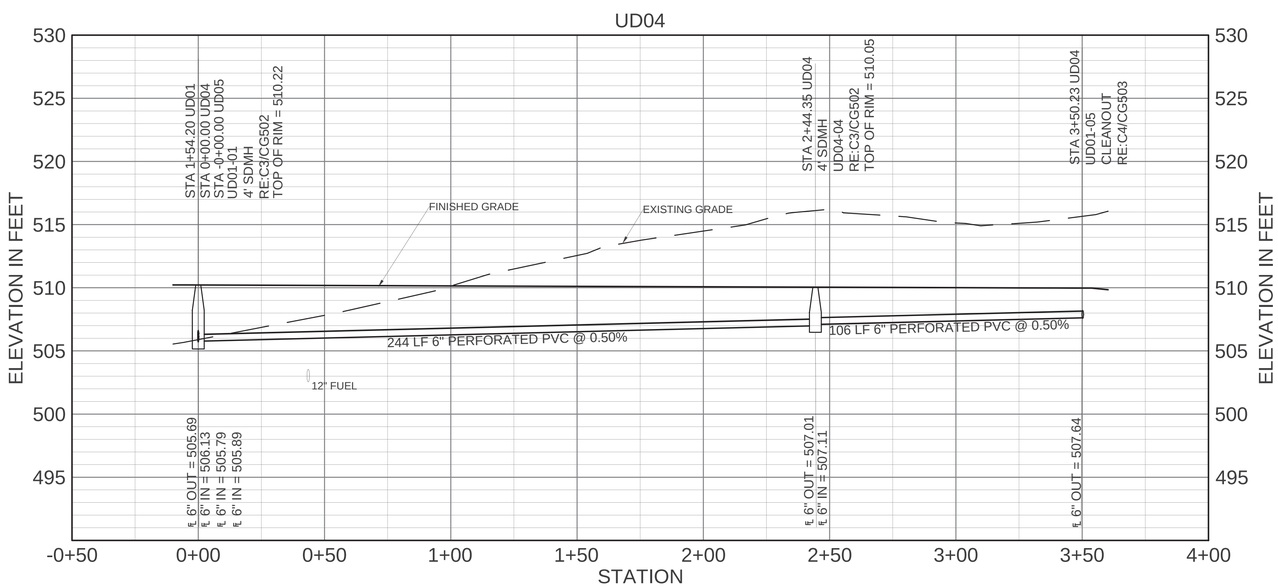

C1 DRAINAGE PROFILES - UD04

SCALE: HORIZONTAL 1" = 30'
VERTICAL 1" = 6'

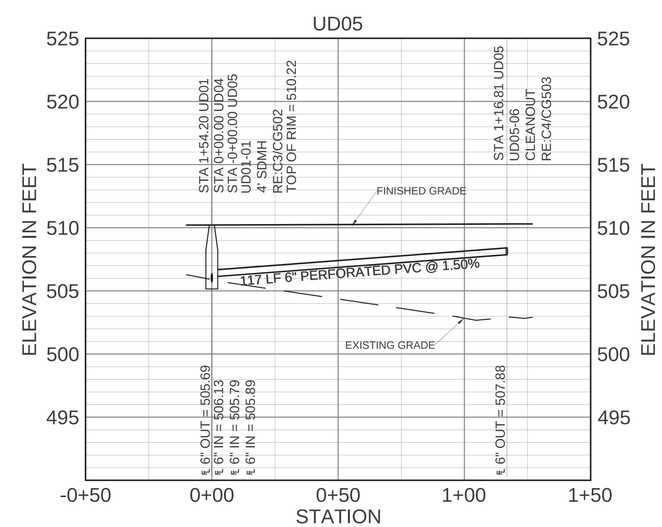

C4 DRAINAGE PROFILES - UD05

SCALE: HORIZONTAL 1" = 30'
VERTICAL 1" = 6'

0 3' 6' 12'
VERTICAL SCALE: 1"=6'

0 15' 30' 60'
HORIZONTAL SCALE: 1"=30'

NAVFAC

STATE OF TEXAS
JENNIFER M. HAYNES
90167
LICENSED
PROFESSIONAL ENGINEER
1/20/2026
TEXAS REGISTERED ENGINEERING FIRM F-2966 SEAL

Jacobs / BURNS MCDONNELL
JACOBS/B&M, A JOINT VENTURE
1100 NORTH GLEBE ROAD
SUITE 500
ARLINGTON, VA 22201

A/E Contract No. N62742-20-D-0002
A/E Task Order No. N6274221F0315
JCG NO. 03430603
A/E INFO

APPROVED
FOR COMMANDER NAVFAC DATE 02/02/2026

ACTIVITY
AFIMSC APPROVAL PER NAVFAC SAT-TO CHECKLIST

SATISFACTORY TO DATE 31 DEC 2025

DES: JMH	DRW: SMC	REV: ATM
PM/OM		KKK
BRANCH MANAGER		SMK
CHIEF ENG/ARCH		SMK
FIRE PROTECTION		RO

DEPARTMENT OF THE NAVY
NAVAL FACILITIES ENGINEERING SYSTEMS COMMAND
NAVFAC PACIFIC
NAVAL FACILITIES ENGINEERING SYSTEMS COMMAND – PACIFIC
JOINT REGION MARIANAS (JRM)
ANDERSEN AIR FORCE BASE
GUAM

FY24 AUJY183012 (P-012)
PDI: NORTH AIRCRAFT PARKING RAMP

DRAINAGE PROFILES

SCALE: AS SHOWN
EPROJECTS NO.: 1665555
CONSTR CONTROL NO.
NAVFAC DRAWING NO. 17361849
SHEET 226 OF 377

CG206

REDESIGN FINAL SUBMITTAL

IF SHEET IS LESS THAN 22" X 34"
REDUCED PRINT. USE GRAPHIC SCALES

FILE NAME: U:\BLDG\NAVFAC Pacific\D3430603 – P-012 North Aircraft Parking Ramp\700 Working Documents\740 Sheets\740.01 Civil\P012_1665555_CG206.dwg
LAYOUT NAME: DRAINAGE PROFILES
PLOTTED: 01/15/2026 4:11pm
USER: CamersS

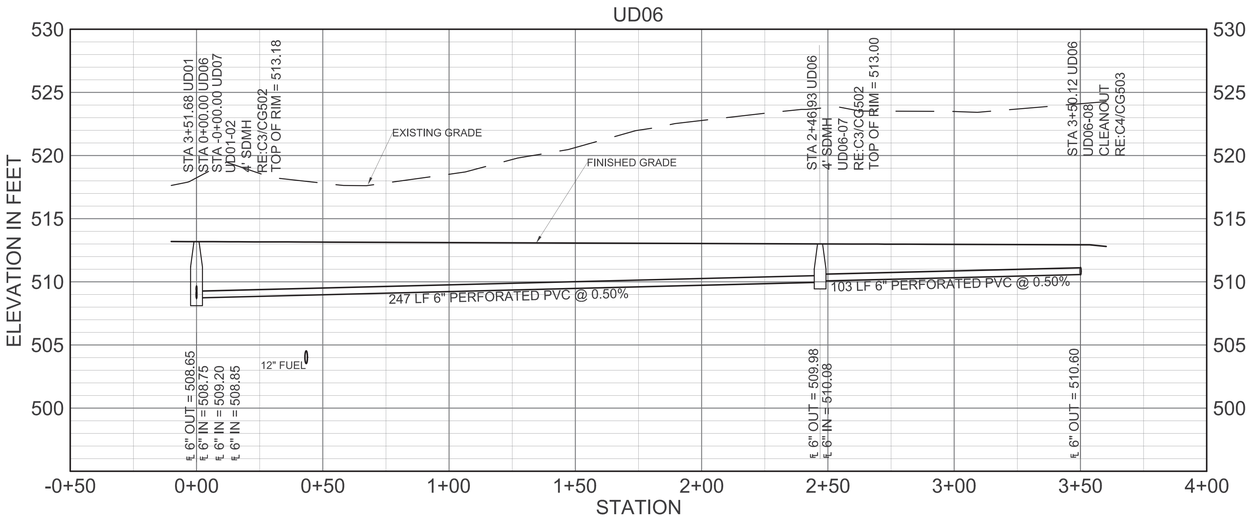

C1 DRAINAGE PROFILES - UD06
SCALE: HORIZONTAL 1" = 30'
VERTICAL 1" = 6'

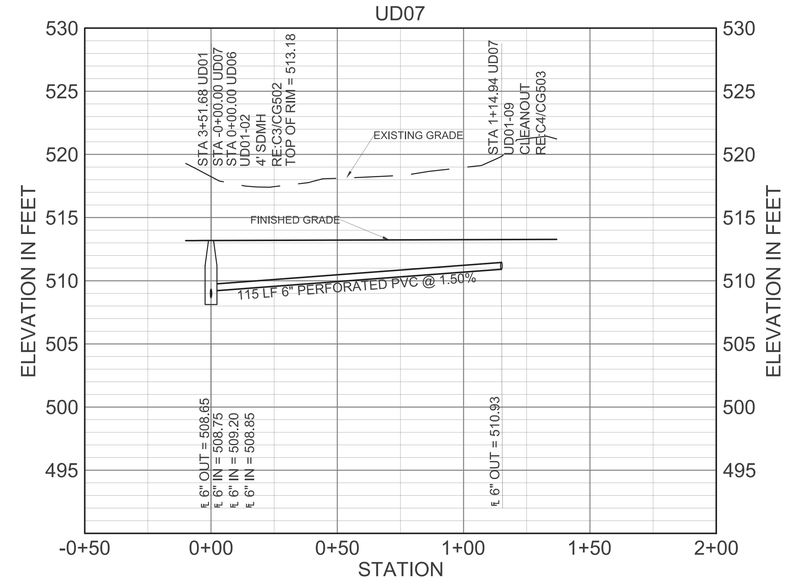

C4 DRAINAGE PROFILES - UD07
SCALE: HORIZONTAL 1" = 30'
VERTICAL 1" = 6'

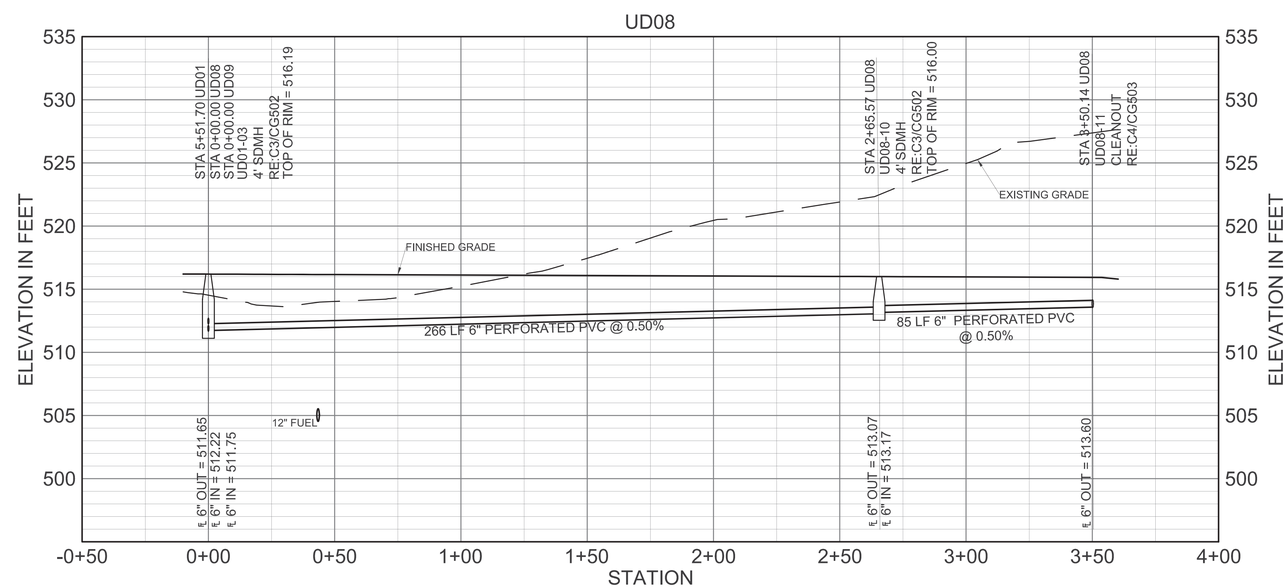

A1 DRAINAGE PROFILES - UD08
SCALE: HORIZONTAL 1" = 30'
VERTICAL 1" = 6'

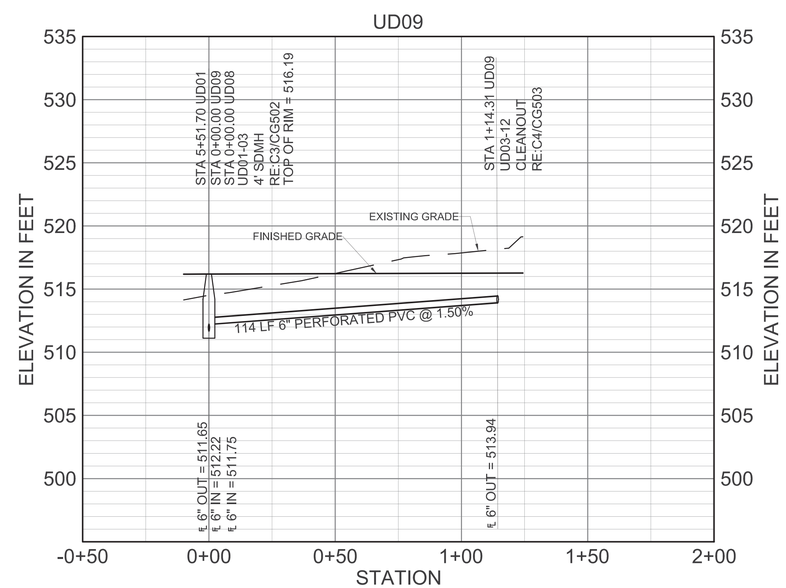

A4 DRAINAGE PROFILES - UD09
SCALE: HORIZONTAL 1" = 30'
VERTICAL 1" = 6'

0 3' 6' 12'
VERTICAL SCALE: 1"=6'

0 15' 30' 60'
HORIZONTAL SCALE: 1"=30'

IF SHEET IS LESS THAN 22" X 34"
REDUCED PRINT. USE GRAPHIC SCALES

NAVFAC

STATE OF TEXAS
JENNIFER M. HAYNES
90167
LICENSED
PROFESSIONAL ENGINEER
1/20/2026
TEXAS REGISTERED ENGINEERING FIRM F-3066 SEAL

Jacobs / BURNS McDONNELL
JACOBS/B&M, A JOINT VENTURE
1100 NORTH GLEBE ROAD
SUITE 500
ARLINGTON, VA 22201

A/E Contract No. N62742-20-D-0002
A/E Task Order No. N6274221F0315
JCG NO. 03430603
A/E INFO

APPROVED
FOR COMMANDER NAVFAC DATE 02/02/2026

ACTIVITY
AFIMSC APPROVAL PER NAVFAC SAT-TO CHECKLIST

SATISFACTORY TO DATE 31 DEC 2025

DES: JMH	DRW: SMC	REV: ATM
PM/OM		KKK
BRANCH MANAGER		SMK
CHIEF ENG/ARCH		SMK
FIRE PROTECTION		RO

DEPARTMENT OF THE NAVY
NAVFAC PACIFIC
NAVAL FACILITIES ENGINEERING SYSTEMS COMMAND
NAVAL FACILITIES ENGINEERING SYSTEMS COMMAND ~ PACIFIC
JOINT REGION MARIANAS (JRM)
ANDERSEN AIR FORCE BASE
GUAM

FY24 AJUY183012 (P-012)
PDI: NORTH AIRCRAFT PARKING RAMP

DRAINAGE PROFILES

SCALE: AS SHOWN
EPROJECTS NO.: 1665555
CONSTR CONTROL NO.
NAVFAC DRAWING NO. 17361850
SHEET 227 OF 377

CG207

REDESIGN FINAL SUBMITTAL

FILE NAME: U:\BLDG\NAVFAC Pacific\03430603 - P-012 North Aircraft Parking Ramp\700 Working Documents\740 Sheets\740.01 Civil\P012_1665555_CG207.dwg
LAYOUT NAME: DRAINAGE PROFILES
PLOTTED: 01/15/2026 4:48pm
USER: CamersS

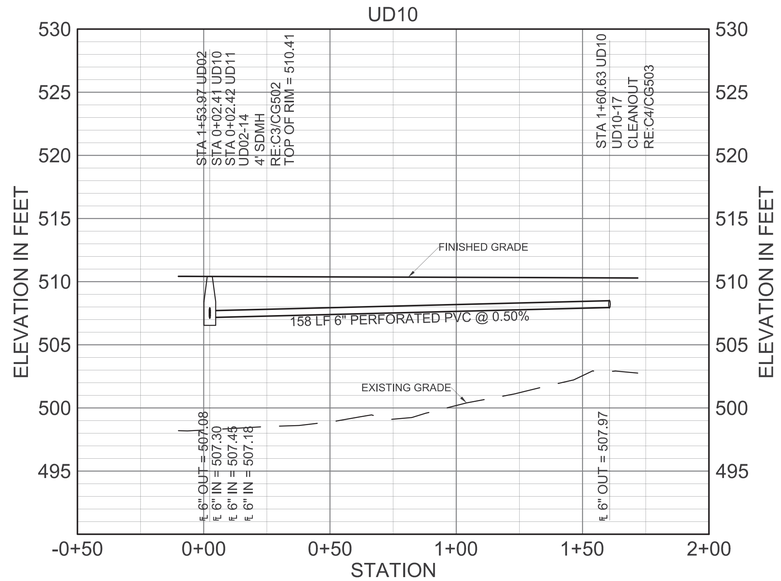

C1 DRAINAGE PROFILES - UD10
SCALE: HORIZONTAL 1" = 30'
VERTICAL 1" = 6'

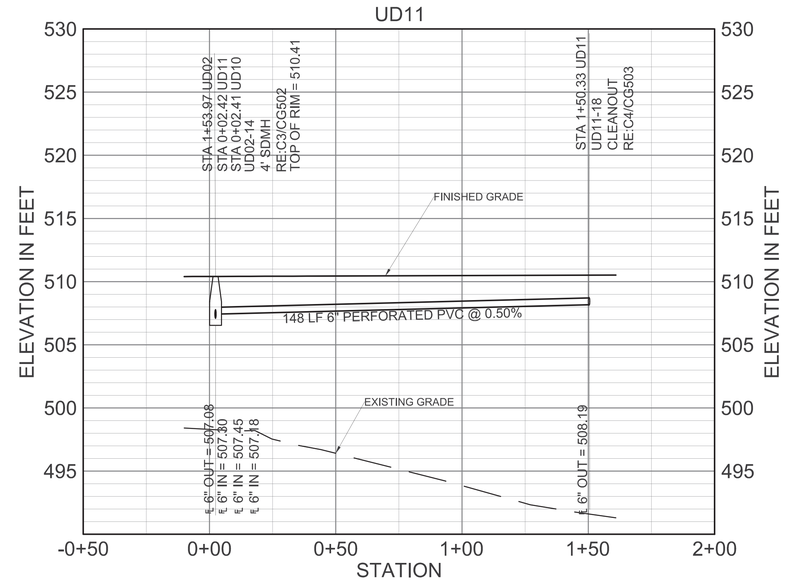

C4 DRAINAGE PROFILES - UD11
SCALE: HORIZONTAL 1" = 30'
VERTICAL 1" = 6'

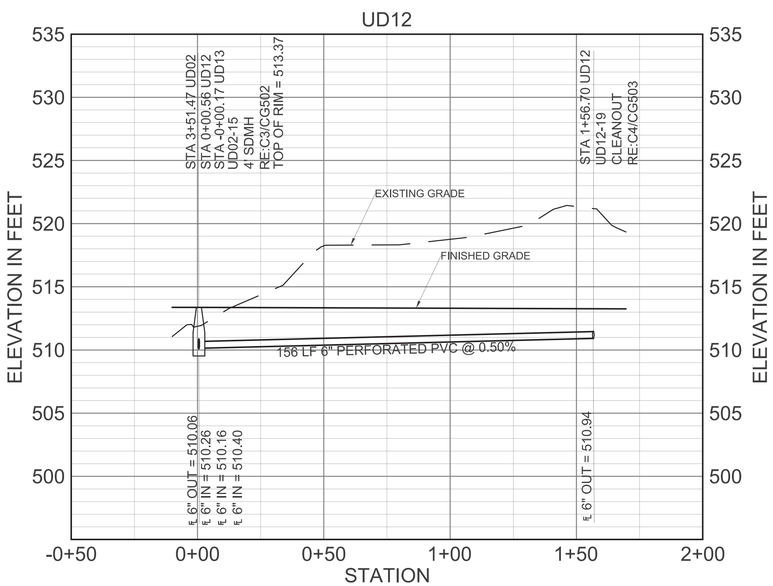

A1 DRAINAGE PROFILES - UD12
SCALE: HORIZONTAL 1" = 30'
VERTICAL 1" = 6'

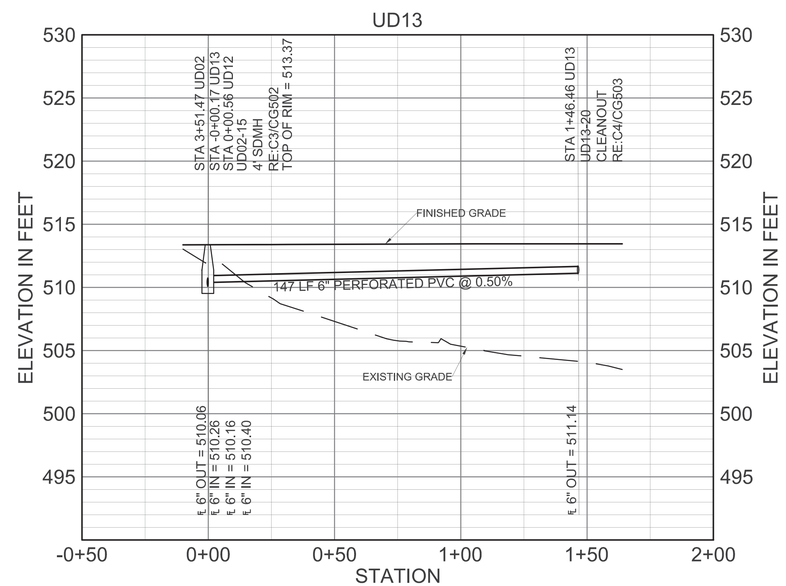

A4 DRAINAGE PROFILES - UD13
SCALE: HORIZONTAL 1" = 30'
VERTICAL 1" = 6'

0 3' 6' 12'
VERTICAL SCALE: 1"=6'

0 15' 30' 60'
HORIZONTAL SCALE: 1"=30'

IF SHEET IS LESS THAN 22" X 34"
REDUCED PRINT. USE GRAPHIC SCALES

NAVFAC

STATE OF TEXAS
JENNIFER M. HAYNES
90167
LICENSED
PROFESSIONAL ENGINEER
1/20/2026
TEXAS REGISTERED ENGINEERING FIRM F-3966 SEAL

Jacobs / BURNS McDONNELL
JACOBS/B&M, A JOINT VENTURE
1100 NORTH GLEBE ROAD
SUITE 500
ARLINGTON, VA 22201

A/E Contract No. N62742-20-D-0002
A/E Task Order No. N62742-21F-0315
JCG NO. 03430603
A/E INFO

APPROVED
FOR COMMANDER NAVFAC DATE 02/02/2026

ACTIVITY
AFIMSC APPROVAL PER NAVFAC SAT-TO CHECKLIST

SATISFACTORY TO DATE 31 DEC 2025

DES:	JMH	DRW: SMC	REV: ATM
PM/OM			KKK
BRANCH MANAGER			SMK
CHIEF ENG/ARCH			SMK
FIRE PROTECTION			RO

DEPARTMENT OF THE NAVY
NAVFAC PACIFIC
NAVAL FACILITIES ENGINEERING SYSTEMS COMMAND
NAVAL FACILITIES ENGINEERING SYSTEMS COMMAND ~ PACIFIC
JOINT REGION MARIANAS (JRM)
ANDERSEN AIR FORCE BASE
GUAM

FY24 AJJY183012 (P-012)
PDI: NORTH AIRCRAFT PARKING RAMP

DRAINAGE PROFILES

SCALE: AS SHOWN
EPROJECTS NO.: 1665555
CONSTR CONTROL NO.
NAVFAC DRAWING NO. 17361851
SHEET 228 OF 377

CG208

REDESIGN FINAL SUBMITTAL

FILE NAME: U:\BLDG\NAVFAC Pacific\03430603 - P-012 North Aircraft Parking Ramp\700 Working Documents\740 Sheets\740.01 Civil\P012_1665555_CG208.dwg
LAYOUT NAME: DRAINAGE PROFILES
PLOTTED: 01/15/2026 4:48pm
USER: CamersS

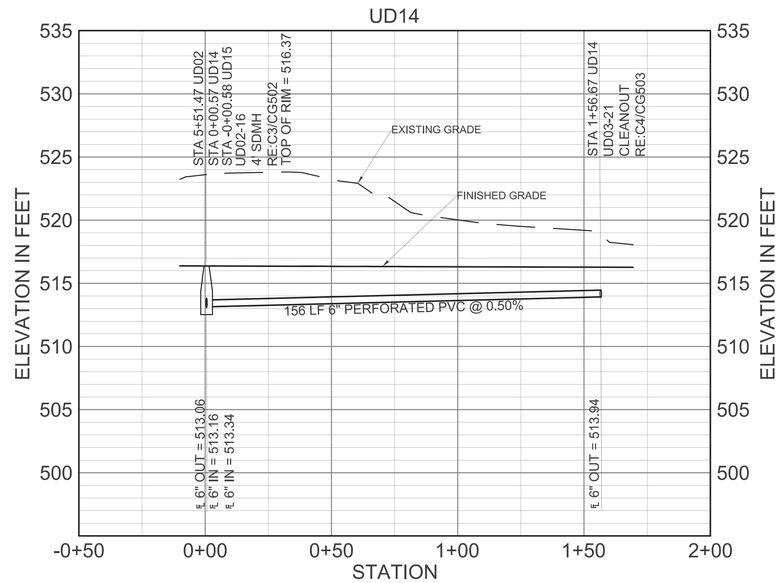

C1 DRAINAGE PROFILES - UD14
SCALE: HORIZONTAL 1" = 30'
VERTICAL 1" = 6'

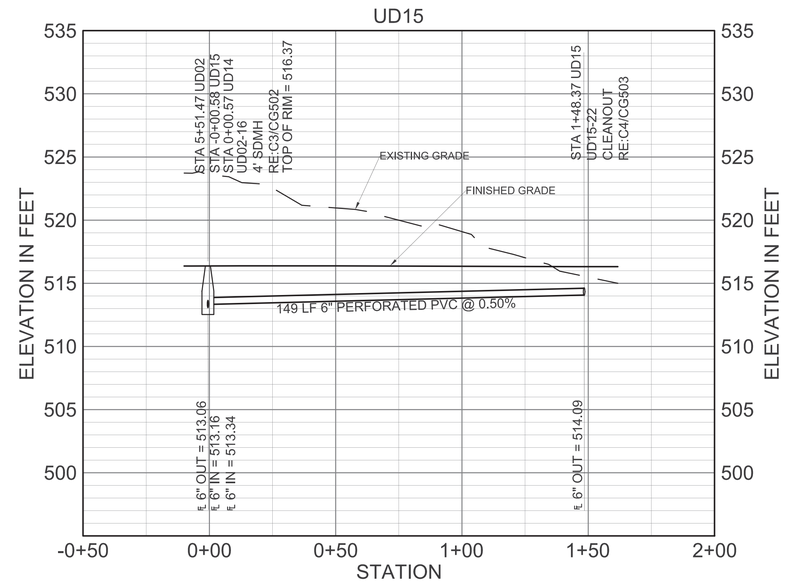

C4 DRAINAGE PROFILES - UD15
SCALE: HORIZONTAL 1" = 30'
VERTICAL 1" = 6'

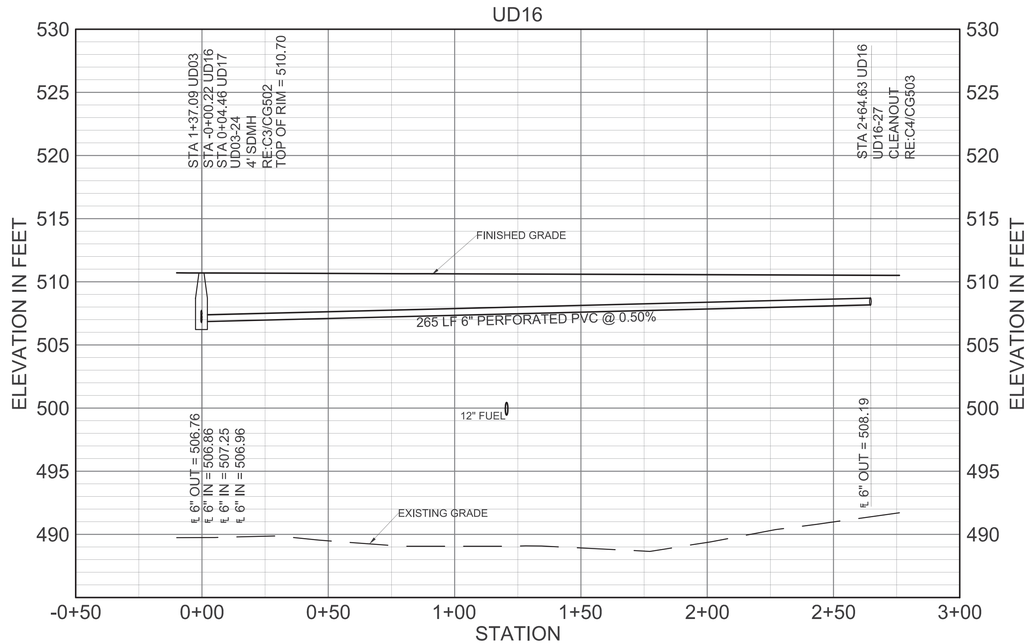

A1 DRAINAGE PROFILES - UD16
SCALE: HORIZONTAL 1" = 30'
VERTICAL 1" = 6'

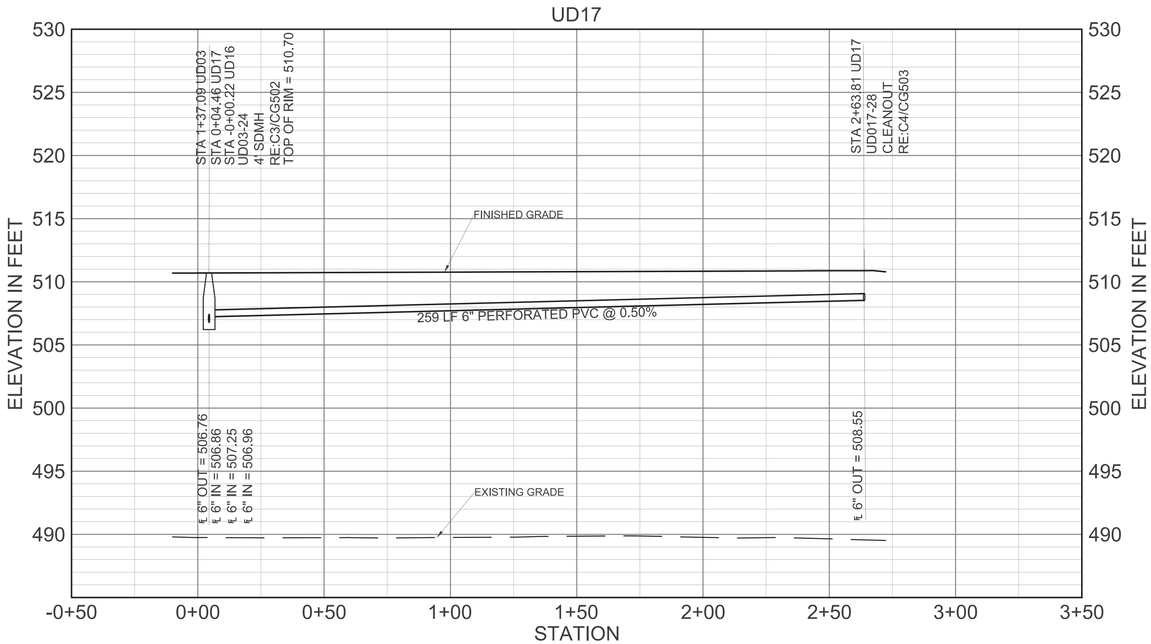

A4 DRAINAGE PROFILES - UD17
SCALE: HORIZONTAL 1" = 30'
VERTICAL 1" = 6'

0 3' 6' 12'
VERTICAL SCALE: 1"=6'

0 15' 30' 60'
HORIZONTAL SCALE: 1"=30'

NAVFAC

STATE OF TEXAS
JENNIFER M. HAYNES
90167
LICENSED
PROFESSIONAL ENGINEER
1/20/2026
TEXAS REGISTERED ENGINEERING FIRM F-3966 SEAL

Jacobs / BURNS & McDONNELL
JACOBS/B&M, A JOINT VENTURE
1100 NORTH GLEBE ROAD
SUITE 500
ARLINGTON, VA 22201

A/E Contract No. N62742-20-D-0002
A/E Task Order No. N6274221F0315
JCG NO. 03430603
A/E INFO

APPROVED
FOR COMMANDER NAVFAC DATE 02/02/2026

ACTIVITY
AFIMSC APPROVAL PER NAVFAC SAT-TO CHECKLIST

SATISFACTORY TO DATE 31 DEC 2025

DES: JMH	DRW: SMC	REV: ATM
PM/OM		KKK
BRANCH MANAGER		SMK
CHIEF ENG/ARCH		SMK
FIRE PROTECTION		RO

DEPARTMENT OF THE NAVY
NAVAL FACILITIES ENGINEERING SYSTEMS COMMAND
NAVFAC PACIFIC
NAVAL FACILITIES ENGINEERING SYSTEMS COMMAND ~ PACIFIC
JOINT REGION MARIANAS (JRM)
ANDERSEN AIR FORCE BASE
GUAM

FY24 AJJY183012 (P-012),
PDI: NORTH AIRCRAFT PARKING RAMP

DRAINAGE PROFILES

SCALE: AS SHOWN
EPROJECTS NO.: 1665555
CONSTR CONTROL NO.
NAVFAC DRAWING NO. 17361852
SHEET 229 OF 377

CG209

REDESIGN FINAL SUBMITTAL

IF SHEET IS LESS THAN 22" X 34"
REDUCED PRINT. USE GRAPHIC SCALES

FILE NAME: U:\BLDG\NAVFAC Pacific\03430603 - P-012 North Aircraft Parking Ramp\700 Working Documents\740 Sheets\740.01 Civil\P012_1665555_CG209.dwg
LAYOUT NAME: DRAINAGE PROFILES
PLOTTED: 01/15/2026 4:49pm
USER: CamersS

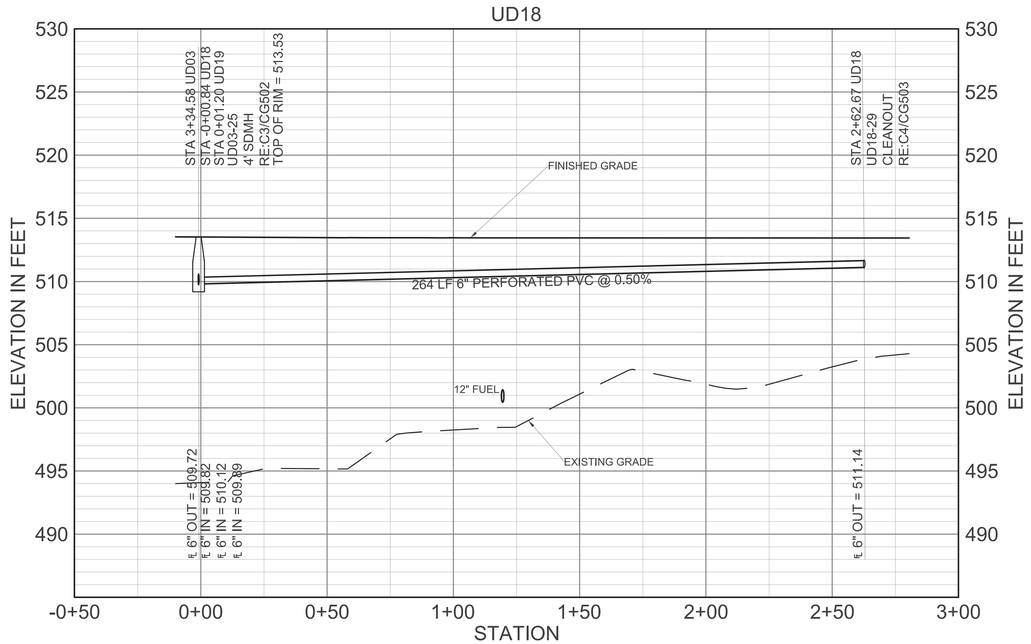

C1 DRAINAGE PROFILES - UD18
SCALE: HORIZONTAL 1" = 30'
VERTICAL 1" = 6'

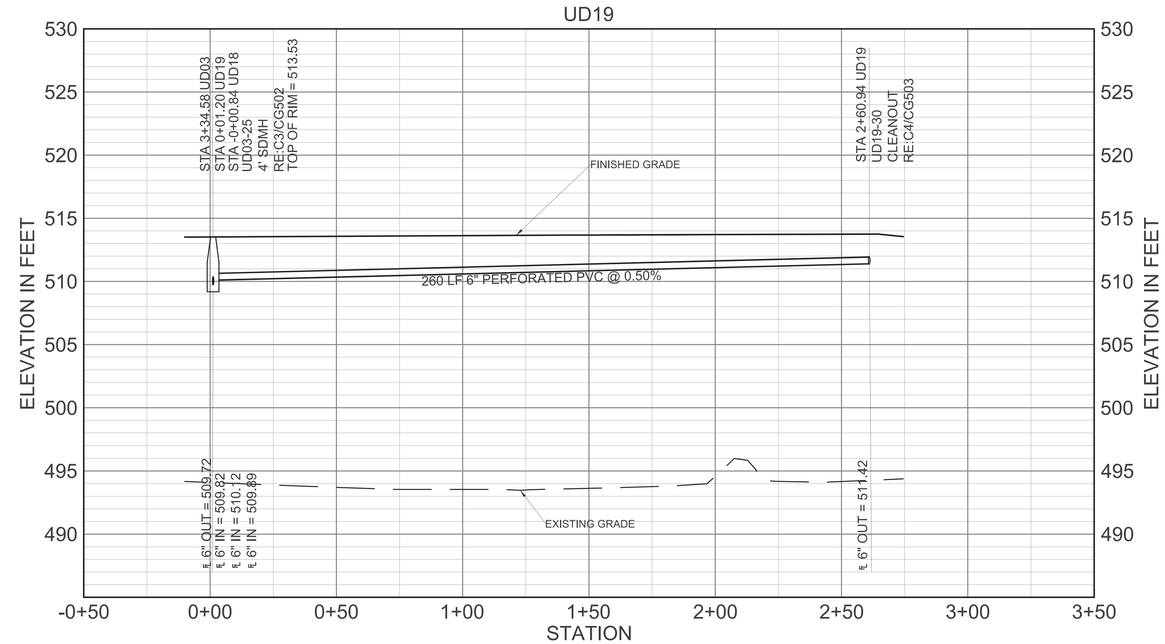

C4 DRAINAGE PROFILES - UD19
SCALE: HORIZONTAL 1" = 30'
VERTICAL 1" = 6'

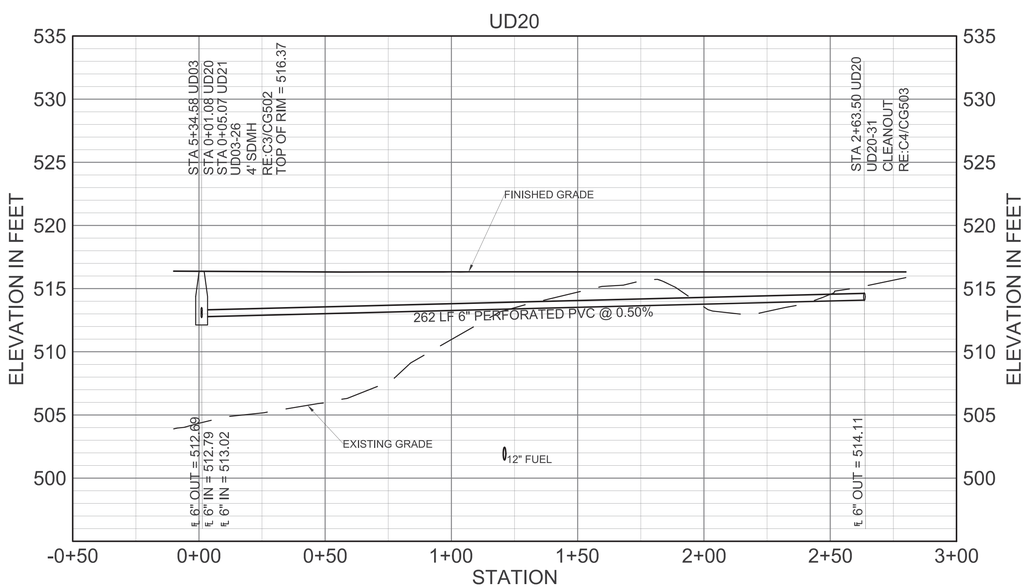

A1 DRAINAGE PROFILES - UD20
SCALE: HORIZONTAL 1" = 30'
VERTICAL 1" = 6'

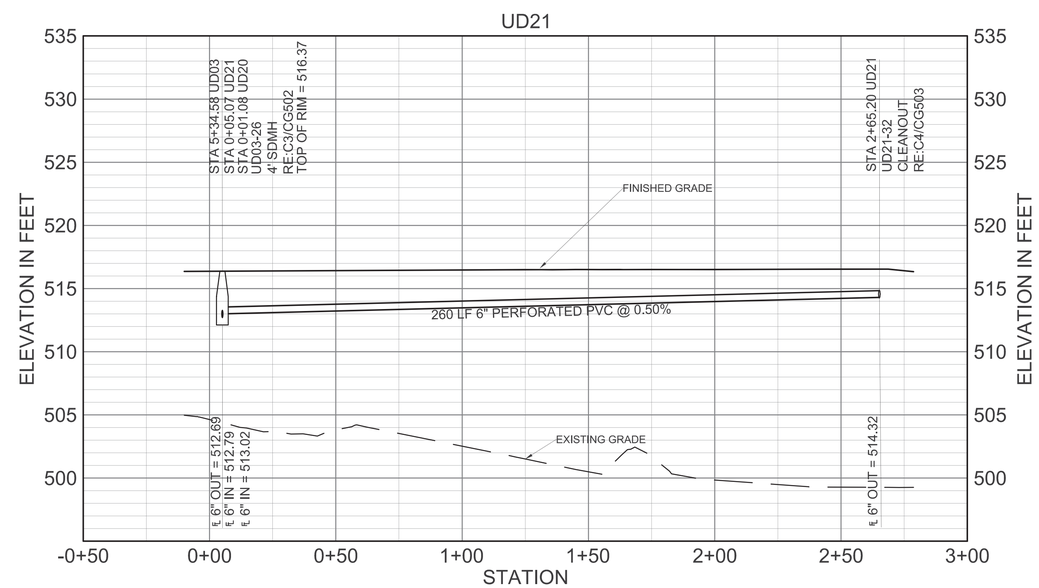

A4 DRAINAGE PROFILES - UD21
SCALE: HORIZONTAL 1" = 30'
VERTICAL 1" = 6'

0 3' 6' 12'
VERTICAL SCALE: 1"=6'

0 15' 30' 60'
HORIZONTAL SCALE: 1"=30'

IF SHEET IS LESS THAN 22" X 34"
REDUCED PRINT. USE GRAPHIC SCALES

NAVFAC

STATE OF TEXAS
JENNIFER M. HAYNES
90167
LICENSED
PROFESSIONAL ENGINEER
1/20/2026
TEXAS REGISTERED ENGINEERING FIRM F-3566 SEAL

Jacobs / BURNS McDONNELL
JACOBS/B&M, A JOINT VENTURE
1100 NORTH GLEBE ROAD
SUITE 500
ARLINGTON, VA 22201

A/E Contract No. N62742-20-D-0002
A/E Task Order No. N6274221F0315
JCG NO. 03430603
A/E INFO

APPROVED
FOR COMMANDER NAVFAC DATE 02/02/2026

ACTIVITY
AFIMSC APPROVAL PER NAVFAC SAT-TO CHECKLIST

SATISFACTORY TO DATE 31 DEC 2025

DES: JMH	DRW: SMC	REV: ATM
PM/OM		KKK
BRANCH MANAGER		SMK
CHIEF ENG/ARCH		SMK
FIRE PROTECTION		RO

DEPARTMENT OF THE NAVY
NAVAL FACILITIES ENGINEERING SYSTEMS COMMAND
NAVFAC PACIFIC
NAVAL FACILITIES ENGINEERING SYSTEMS COMMAND ~ PACIFIC
JOINT REGION MARIANAS (JRM)
ANDERSEN AIR FORCE BASE
GUAM

FY24 AUJY183012 (P-012)
PDI: NORTH AIRCRAFT PARKING RAMP

DRAINAGE PROFILES

SCALE: AS SHOWN
EPROJECTS NO.: 1665555
CONSTR CONTROL NO.
NAVFAC DRAWING NO. 17361853
SHEET 230 OF 377

CG210

REDESIGN FINAL SUBMITTAL

FILE NAME: U:\BLDG\NAVFAC Pacific\03430603 - P-012 North Aircraft Parking Ramp\700 Working Documents\740 Sheets\740.01 Civil\P012_1665555_CG210.dwg
LAYOUT NAME: DRAINAGE PROFILES
PLOTTED: 01/15/2026 4:49pm
USER: CamersS

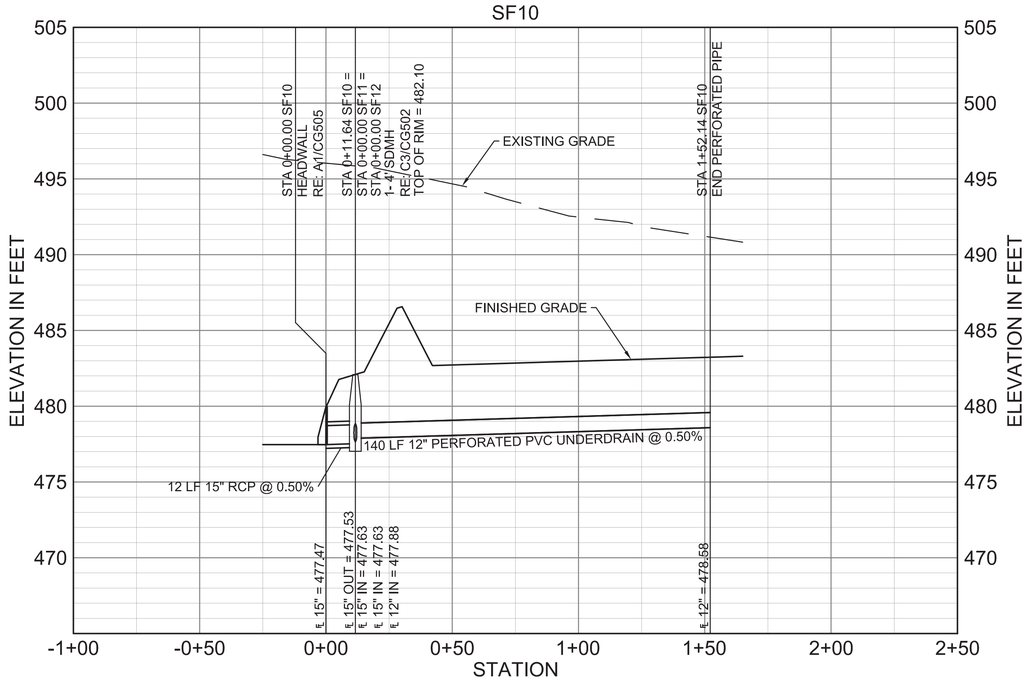

C1 DRAINAGE PROFILES - SF10
SCALE: HORIZONTAL 1" = 30'
VERTICAL 1" = 6'

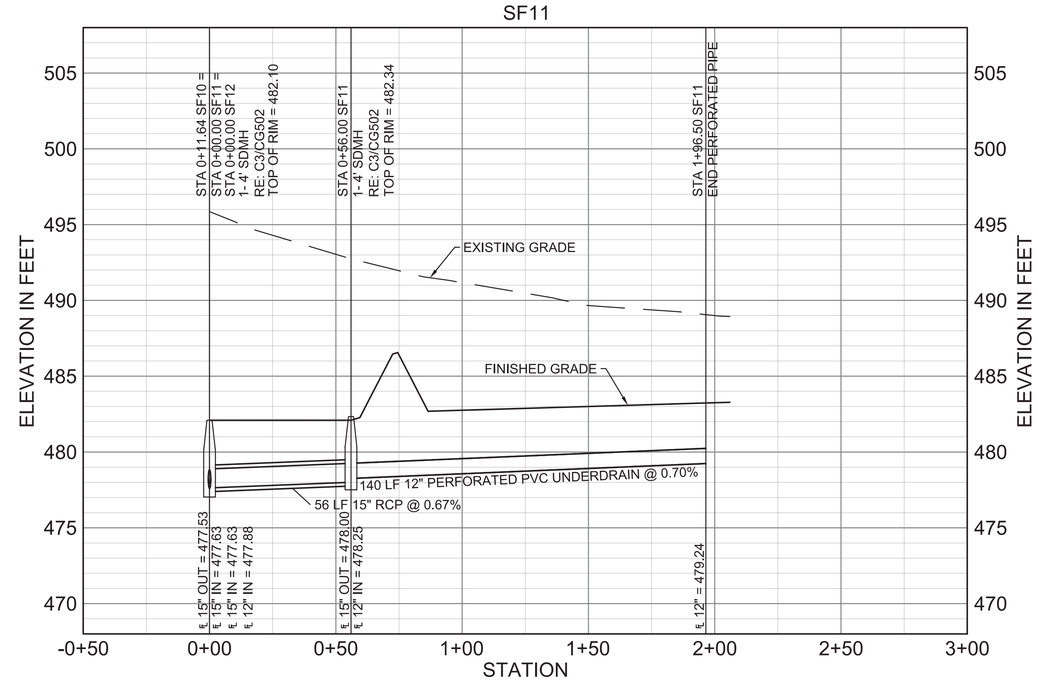

C4 DRAINAGE PROFILES - SF11
SCALE: HORIZONTAL 1" = 30'
VERTICAL 1" = 6'

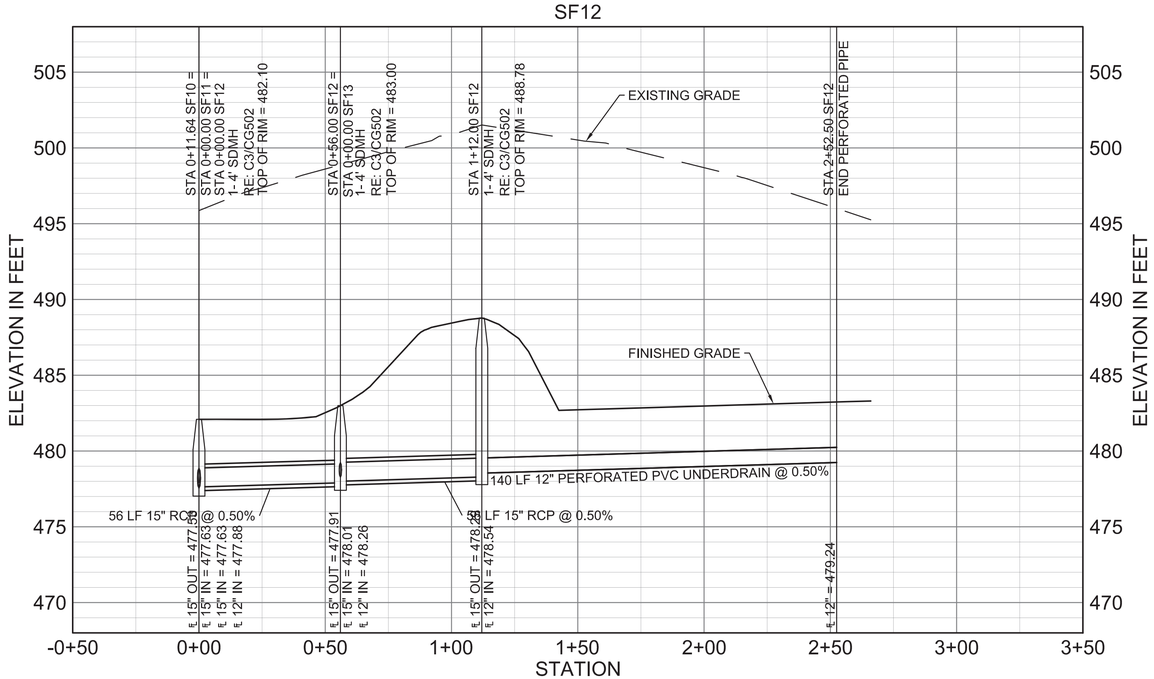

A1 DRAINAGE PROFILES - SF12
SCALE: HORIZONTAL 1" = 30'
VERTICAL 1" = 6'

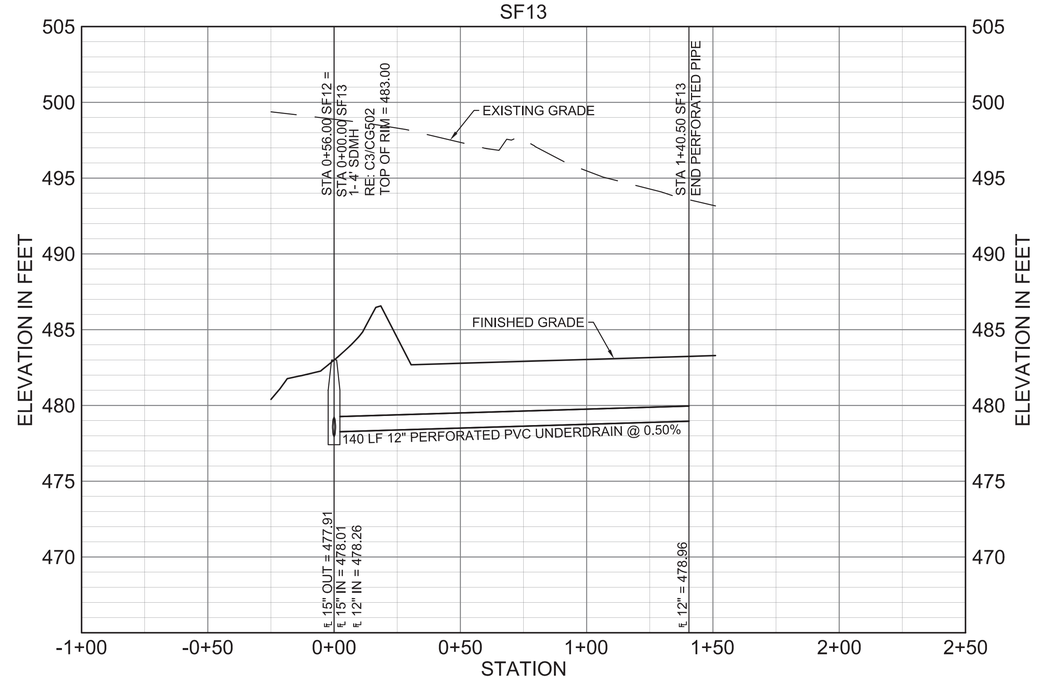

A4 DRAINAGE PROFILES - SF13
SCALE: HORIZONTAL 1" = 30'
VERTICAL 1" = 6'

0 3' 6' 12'
VERTICAL SCALE: 1"=6'

0 15' 30' 60'
HORIZONTAL SCALE: 1"=30'

NAVFAC

STATE OF TEXAS
JENNIFER M. HAYNES
90167
LICENSED
PROFESSIONAL ENGINEER
1/27/2026
TEXAS REGISTERED ENGINEERING FIRM F-3966 SEAL

Jacobs / BURNS McDONNELL
JACOBS/B&M, A JOINT VENTURE
1100 NORTH GLEBE ROAD
SUITE 500
ARLINGTON, VA 22201

A/E Contract No. N62742-20-D-0002
A/E Task Order No. N6274221F0315
JCG NO. 03430603
A/E INFO

APPROVED
FOR COMMANDER NAVFAC DATE 02/02/2026

ACTIVITY
AFIMSC APPROVAL PER NAVFAC SAT-TO CHECKLIST

SATISFACTORY TO DATE 31 DEC 2025

DES:	JMH	DRW:	SMC	REV:	ATM
PM/DM					KKK
BRANCH MANAGER					SMK
CHIEF ENG/ARCH					SMK
FIRE PROTECTION					RO

DEPARTMENT OF THE NAVY
NAVAL FACILITIES ENGINEERING SYSTEMS COMMAND
NAVFAC PACIFIC
NAVAL FACILITIES ENGINEERING SYSTEMS COMMAND ~ PACIFIC
JOINT REGION MARIANAS (JRM)
ANDERSEN AIR FORCE BASE
GUAM

FY24 AJJY183012 (P-012),
PDI: NORTH AIRCRAFT PARKING RAMP

DRAINAGE PROFILES

SCALE: AS SHOWN
EPROJECTS NO.: 1665555
CONSTR CONTROL NO.
NAVFAC DRAWING NO. 17361854
SHEET 231 OF 377

CG211

REDESIGN FINAL SUBMITTAL

IF SHEET IS LESS THAN 22" X 34" REDUCED PRINT. USE GRAPHIC SCALES

FILE NAME: U:\BLDG\NAVFAC Pacific\03430603 - P-012 North Aircraft Parking Ramp\700 Working Documents\740 Sheets\740.01 Civil\P012_1665555_CG211.dwg
LAYOUT NAME: DRAINAGE PROFILES
PLOTTED: 01/27/2026 11:28pm
USER: CamaroS

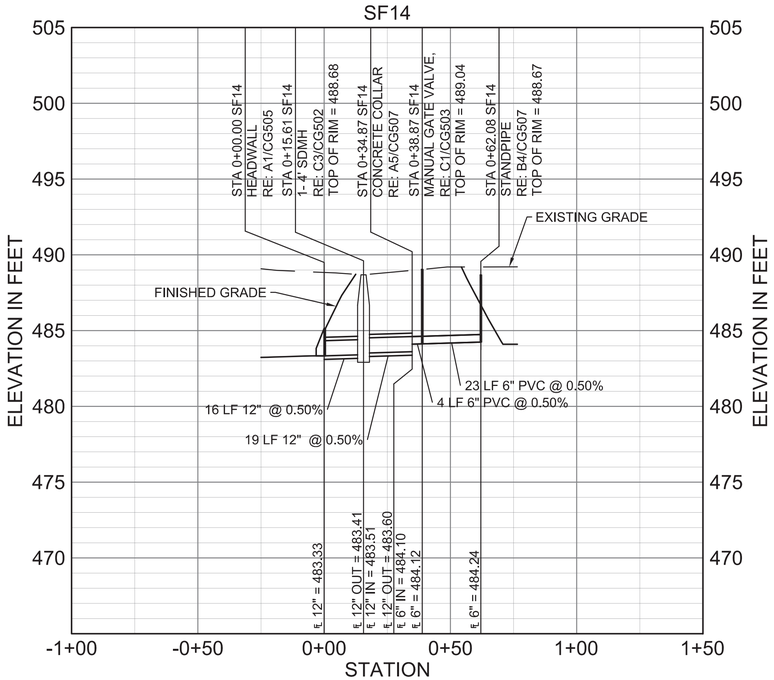

C1 DRAINAGE PROFILES - SF14
SCALE: HORIZONTAL 1" = 30'
VERTICAL 1" = 6'

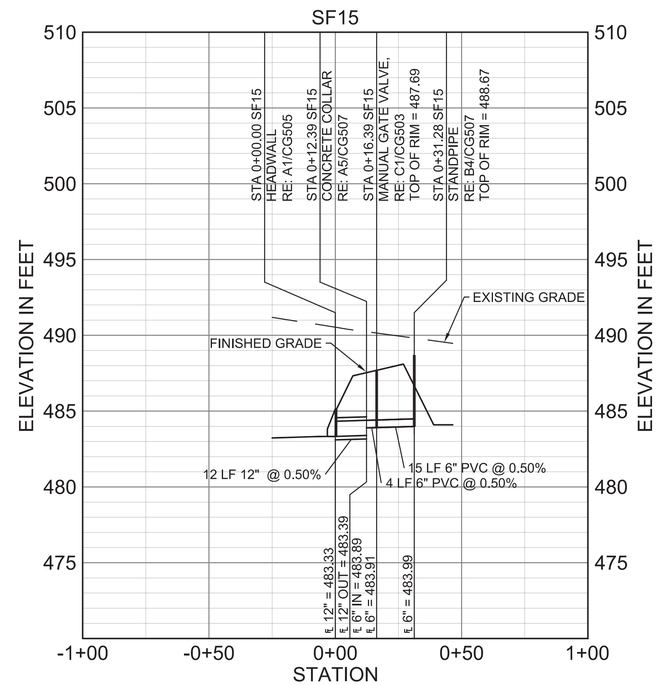

C3 DRAINAGE PROFILES - SF15
SCALE: HORIZONTAL 1" = 30'
VERTICAL 1" = 6'

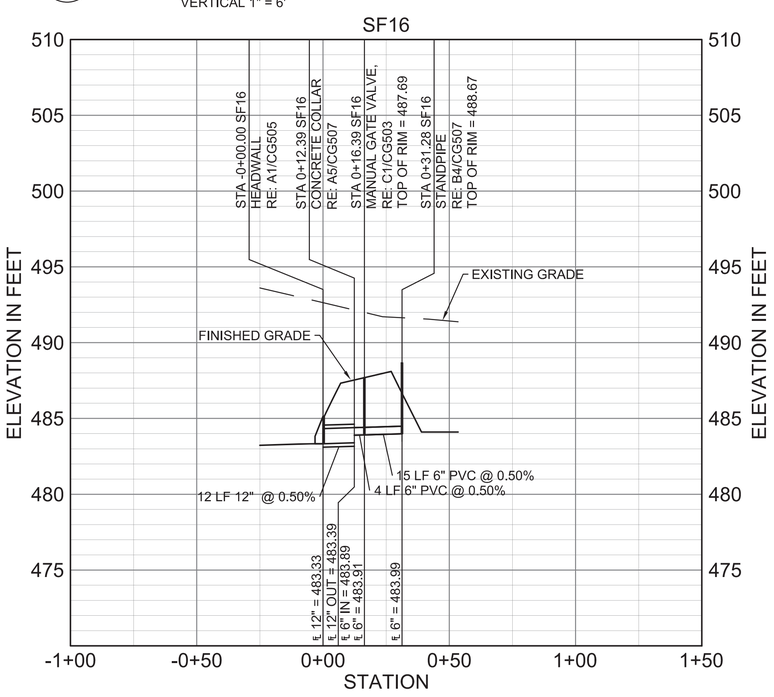

A1 DRAINAGE PROFILES - SF16
SCALE: HORIZONTAL 1" = 30'
VERTICAL 1" = 6'

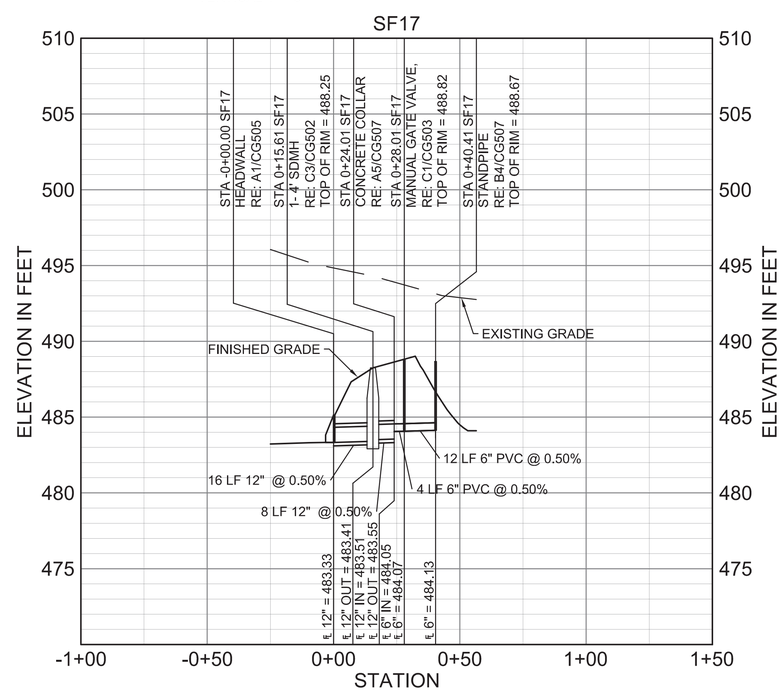

A3 DRAINAGE PROFILES - SF17
SCALE: HORIZONTAL 1" = 30'
VERTICAL 1" = 6'

0 3' 6' 12'
VERTICAL SCALE: 1"=6'

0 15' 30' 60'
HORIZONTAL SCALE: 1"=30'

NAVFAC

STATE OF TEXAS
JENNIFER M. HAYNES
90167
LICENSED
PROFESSIONAL ENGINEER
1/27/2026
TEXAS REGISTERED ENGINEERING FIRM F-3566 SEAL

Jacobs / BURNS McDONNELL
JACOBS/B&M, A JOINT VENTURE
1100 NORTH GLEBE ROAD
SUITE 500
ARLINGTON, VA 22201

A/E Contract No. N62742-20-D-0002
A/E Task Order No. N62742-21F0315
JEG NO. D3430603
A/E INFO

APPROVED
FOR COMMANDER NAVFAC DATE 02/02/2026

ACTIVITY
AFIMSC APPROVAL PER NAVFAC SAT-TO CHECKLIST

SATISFACTORY TO DATE 31 DEC 2025

DES:	JMH	DRW:	SMC	REV:	ATM
PM/DM					KKK
BRANCH MANAGER					SMK
CHIEF ENG/ARCH					SMK
FIRE PROTECTION					RO

DEPARTMENT OF THE NAVY
NAVFAC PACIFIC
NAVAL FACILITIES ENGINEERING SYSTEMS COMMAND
NAVAL FACILITIES ENGINEERING SYSTEMS COMMAND ~ PACIFIC
JOINT REGION MARIANAS (JRM)
ANDERSEN AIR FORCE BASE
GUAM

FY24 AJJY183012 (P-012),
PDI: NORTH AIRCRAFT PARKING RAMP

DRAINAGE PROFILES

SCALE: AS SHOWN
EPROJECTS NO.: 1665555
CONSTR CONTROL NO.
NAVFAC DRAWING NO. 17361855
SHEET 232 OF 377
CG212

REDESIGN FINAL SUBMITTAL

IF SHEET IS LESS THAN 22" X 34"
REDUCED PRINT. USE GRAPHIC SCALES

FILE NAME: U:\BLDG\NAVFAC Pacific\D3430603 - P-012 North Aircraft Parking Ramp\700 Working Documents\740 Sheets\740.01 Civil\P012_1665555_CG212.dwg
LAYOUT NAME: DRAINAGE PROFILES
PLOTTED: 01/27/2026 11:29pm
USER: CamerasS

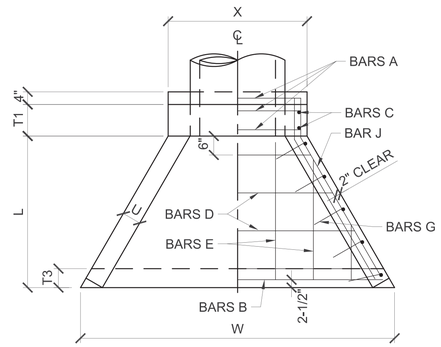

PLAN VIEW

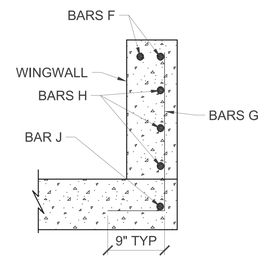

TYPICAL WINGWALL SECTION

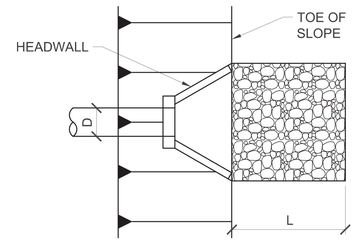

PLAN VIEW

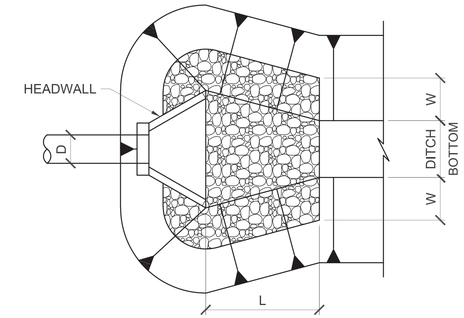

PLAN VIEW

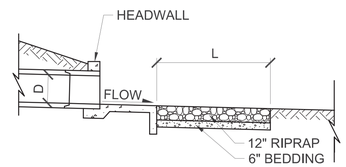

SECTION VIEW

STORM DRAIN OR CULVERT OUTLET W/O DITCH

HEADWALL	DIMENSIONS (FEET)
	L
12"	4'
15"	5'
18"	6'
24"	7'

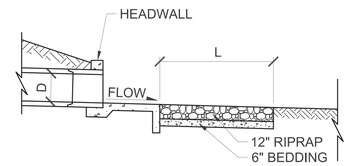

SECTION VIEW

STORM DRAIN OR CULVERT OUTLET WITH DITCH

HEADWALL	DIMENSIONS (FEET)		
	DITCH BOTTOM	W	L
18"	5	3	15
24"	5	3	15
30"	5	3	15

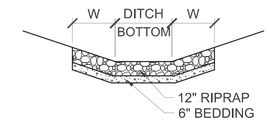

SECTION VIEW

NOTES:

1. 12-INCH THICK RIPRAP MUST MEET THE GRADATION REQUIREMENTS FOR 6-INCH d50 STONE SIZE.
2. BEDDING MATERIAL MUST CONSIST OF AGGREGATE BASE COURSE.
3. FOR SWALES CONVEYING RUNOFF FROM THE AIRFIELD, INSTALL A GEOSYNTHETIC CLAY LINER BENEATH THE RIP-RAP.

B4 RIP-RAP INSTALLATION DETAIL
SCALE: NTS

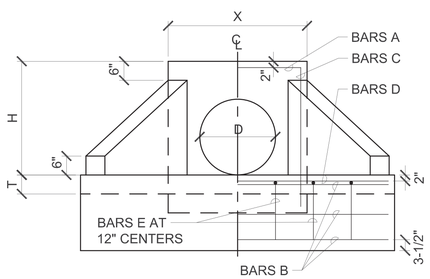

ELEVATION VIEW

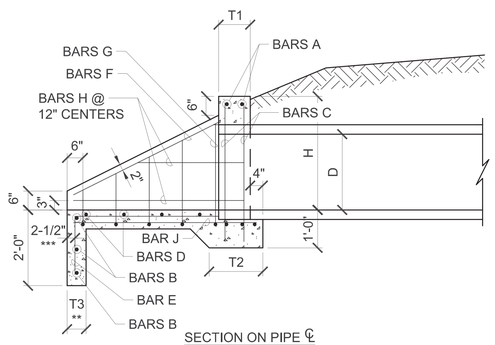

SECTION ON PIPE ℄

PIPE HEADWALL DETAILS

TABLE OF VARIABLE DIMENSIONS

PIPE SIZE D	NUMBER OF PIPE*	H	L	W	X	T/T3**	T1	T2	U	BARS A NO.	BARS A SIZE	BARS B NO.	BARS B SIZE	BARS C NO.	BARS C SIZE	BARS D NO.	BARS D SIZE	BARS E NO.	BARS E SIZE	BARS F NO.	BARS F SIZE	BARS G NO.	BARS G SIZE	BARS G SPACING NORMAL TO CURB	BARS H NO.	BARS H SIZE	BARS J NO.	BARS J SIZE	BARS K NO.	BARS K SIZE
12"	1	2'-0"	2'-0"	4'-11 3/4"	2'-8"	6"	10"	1'-5"	6"	5	#4	3	#4	4	#4	2	#4	4	#4	4	#4	4	#4	12"	4	#4	2	#4	-	-
15"	1	2'-3"	2'-6"	6'-4 1/2"	2'-11"	6"	10"	1'-5"	6"	5	4	3	4	4	4	3	4	4	4	4	4	6	4	12"	4	4	2	4	-	-
18"	1	2'-6"	3'-0"	6'-7 1/2"	3'-2"	6"	10"	1'-5"	6"	5	4	3	4	4	4	3	4	6	4	4	4	6	4	12"	4	4	2	4	-	-
18"	2	2'-6"	3'-0"	9'-4 1/2"	5'11"	6"	10"	1'-5"	6"	5	4	3	4	8	4	3	4	8	4	4	4	6	4	12"	4	4	2	4	3	4
24"	1	3'-0"	4'-0"	8'-3 1/2"	3'-8"	6"	10"	1'-5"	6"	5	4	3	4	4	4	4	4	7	4	4	4	10	4	12"	6	4	2	4	-	-
24"	2	3'-0"	4'-0"	11'-9 1/2"	7'-2"	6"	10"	1'-5"	6"	5	4	3	4	8	4	4	4	11	4	4	4	10	4	12"	6	4	2	4	3	4
30"	1	3'-6"	5'-0"	9'-11 3/4"	4'-2"	6"	10"	1'-5"	6"	5	4	3	4	4	4	5	4	10	4	4	4	12	4	12"	6	4	2	4	-	-
30"	2	3'-6"	5'-0"	14'-3 3/4"	8'-6 1/2"	6"	10"	1'-5"	6"	5	4	3	4	8	4	5	4	13	4	4	4	12	4	12"	6	4	2	4	4	4
48"	1	5'-0"	8'-0"	15'- 7/8"	5'-10"	6"	12"	1'-7"	6"	5	4	3	4	4	4	8	4	14	4	4	4	20	4	2@8", 4@10", 4@12"	10	4	2	4	-	-

PIPE HEADWALL DETAIL NOTES:

* FOR MULTIPLE INSTALLATIONS HAVING MORE THAN TWO PIPES, THE DIMENSION "X" MUST BE INCREASED BY THE VALUE D + 3D/4 FOR EACH ADDITIONAL PIPE. ADDITIONAL BARS C & E MUST BE PROVIDED AND SPACED AS SHOWN.

** FOR CONCRETE CAST AGAINST THE EARTH, THE T3 DIMENSION MUST BE INCREASED TO A MINIMUM OF 8".

*** INCREASE CLEARANCE TO A MINIMUM OF 3" IF TRENCHED.

GENERAL NOTES:

1. REINFORCING STEEL FY = 60 KSI.

PLAN VIEW NOTES:

1. BARS D MUST BE SPACED AT 12" CENTERS.
2. BARS E MUST BE SPACED AT 12" CENTERS AND MUST BE SPACED SYMETRICALLY ABOUT CENTERLINE.
3. EMBED BARS F AND H INTO HEADWALL 8".

A2 PIPE HEADWALL DETAILS
SCALE: NTS

NAVFAC

STATE OF TEXAS
JENNIFER M. HAYNES
90167
LICENSED
PROFESSIONAL ENGINEER
1/20/2026
TEXAS REGISTERED ENGINEERING FIRM F-3966 SEAL

Jacobs / BURNS McDONNELL
JACOBS/B&M, A JOINT VENTURE
1100 NORTH GLEBE ROAD
SUITE 500
ARLINGTON, VA 22201

A/E Contract No. N62742-20-D-0002
A/E Task Order No. N62742219f0315
JCG NO. 03430603
A/E INFO

APPROVED
FOR COMMANDER NAVFAC DATE 02/02/2026

ACTIVITY
AFIMSC APPROVAL PER NAVFAC SAT-TO CHECKLIST

SATISFACTORY TO DATE 31 DEC 2025

DES: JMH	DRW: SMC	REV:	ATM
PM/DM			KKK
BRANCH MANAGER			SMK
CHIEF ENG/ARCH			SMK
FIRE PROTECTION			RO

DEPARTMENT OF THE NAVY
NAVAL FACILITIES ENGINEERING SYSTEMS COMMAND
NAVFAC PACIFIC
NAVAL FACILITIES ENGINEERING SYSTEMS COMMAND ~ PACIFIC
JOINT REGION MARIANAS (JRM)
ANDERSEN AIR FORCE BASE
GUAM
FY24 AJJY183012 (P-012).
PDI: NORTH AIRCRAFT PARKING RAMP
DRAINAGE DETAILS

SCALE: AS SHOWN
EPROJECTS NO.: 1665555
CONSTR CONTROL NO.
NAVFAC DRAWING NO. 17361856
SHEET 233 OF 377
CG501

REDESIGN FINAL SUBMITTAL

IF SHEET IS LESS THAN 22" X 34" REDUCED PRINT. USE GRAPHIC SCALES

FILE NAME: U:\BLDG\NAVFAC Pacific\03430603 - P-012 North Aircraft Parking Ramp\700 Working Documents\740 Sheets\740.01 Civil\P012_1665555_CG501.dwg
LAYOUT NAME: DRAINAGE DETAILS
PLOTTED: 01/13/2026 9:24am
USER: CamteroS

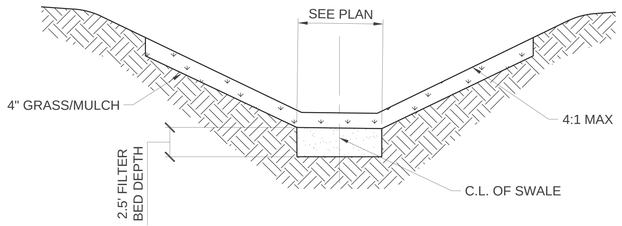

NOTE:

1. THE FILTER BED MEDIA MUST CONSIST OF A MEDIUM SAND (CRUSHED, WASHED LIMESTONE MEETING ASTM C-33 CONCRETE SAND IS ACCEPTABLE). MEDIA USED FOR ORGANIC FILTERS MAY CONSIST OF PEAT/SAND MIX OR LEAF COMPOST. PEAT MUST BE A REED-SEDGE HEMIC PEAT.

D1 DRY SWALE SECTION

SCALE: NTS

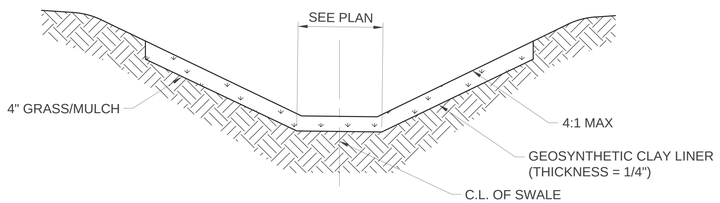

NOTE:

1. SWALE HAS A GEOSYNTHETIC CLAY LINER TO PREVENT GROUND INFILTRATION OF POTENTIALLY FUEL LADEN STORMWATER FROM AIRFIELD SPILLS. SWALE MUST BE IMPERVIOUS.

C1 SWALE SECTION

SCALE: NTS

GEOSYNTHETIC CLAY LINERS (GCL'S) - PRODUCT SPECIFICATIONS

MATERIAL PROPERTY	TEST METHOD	TEST FREQUENCY m^2 (ft^2)	LINER
BENTONITE SWELL INDEX	ASTM D 5890	1 PER 50 TONNES	24 ml/2 g MIN.
BENTONITE FLUID LOSS	ASTM D 5891	1 PER 50 TONNES	18 ml MAX.
BENTONITE MASS/AREA	ASTM D 5993	4,000 (40,000)	3.6 kg/m^2 MIN. (0.75 lb/ft^2)
GCL GRAB STRENGTH	ASTM D 6768	20,000 (200,000)	53 N/cm MARV (30 lb/in) MARV
GCL PEEL STRENGTH	ASTM D 6496	4,000 (40,000)	6.1 N/cm MIN. (3.5 lb/in)
GCL INDEX FLUX	ASTM D 5887	WEEKLY	1 x 10^{-8} m^3/m^2/sec MAX.
GCL HYDRAULIC CONDUCTIVITY	ASTM D 5887	WEEKLY	5 x 10^{-9} cm/sec MAX.
GCL HYDRATED INTERNAL SHEAR STRENGTH	ASTM D 5321 ASTM D 6243	PERIODIC	500 psf (24 kPa) TYP 200 psf

NOTES:

1. BENTONITE MASS/AREA REPORTED AT 0 PERCENT MOISTURE CONTENT.
2. TENSILE STRENGTH TESTING IS PERFORMED IN THE MACHINE DIRECTION USING ASTM D 6768. PEEL STRENGTH TESTING IS PERFORMED USING ASTM D 6496. UPON REQUEST, TENSILE AND PEEL RESULTS CAN BE REPORTED IN ACCORDANCE WITH MODIFIED ASTM D 4632 USING 4 INCH GRIPS.
3. INDEX FLUX AND PERMEABILITY TESTING WITH DEAIRED DISTILLED/DEIONIZED WATER AT 80 PSI (551 KPA) CELL PRESSURE, 77 PSI (531 KPA) HEADWATER PRESSURE AND 75 PSI (517 KPA) TAILWATER PRESSURE. REPORTED VALUE IS EQUIVALENT TO 925 GAL/ACRE/DAY. THIS FLUX VALUE IS EQUIVALENT TO A PERMEABILITY OF 5X10^{-9} CM/SEC FOR TYPICAL GCL THICKNESS. ACTUAL FLUX VALUES VARY WITH FIELD CONDITION PRESSURES. THE LAST 20 WEEKLY VALUES PRIOR THE END OF THE PRODUCTION DATE OF THE SUPPLIED GCL MAY BE PROVIDED.
4. PEAK VALUES MEASURED AT 200 PSF (10 KPA) NORMAL STRESS FOR A SPECIMEN HYDRATED FOR 48 HOURS. SITE-SPECIFIC MATERIALS, GCL PRODUCTS, AND TEST CONDITIONS MUST BE USED TO VERIFY INTERNAL AND INTERFACE STRENGTH OF THE DESIGN.

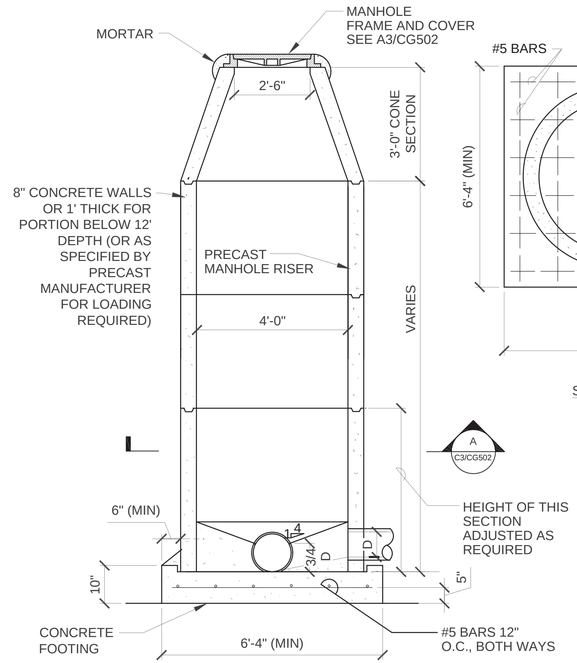

C3 STORM DRAIN MANHOLE DETAIL

SCALE: NTS

NOTE:

1. IF MANHOLE IS 12' OR GREATER IN DEPTH, AN ECCENTRIC CONE IS REQUIRED.

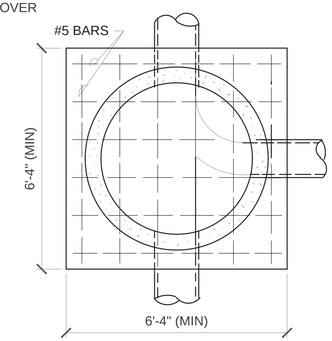

SECTION A

NOTE:

1. FRAME AND LID TO MEET FINAL PAVEMENT ELEVATIONS. MANHOLES WITHIN APRON PAVEMEN MUST BE AIRCRAFT RATED AND ABLE TO WITHSTAND 100,000 LBS WITH 340 PSI CONTACT PRESSURE. OTHER MANHOLES MUST BE H-20 RATED.

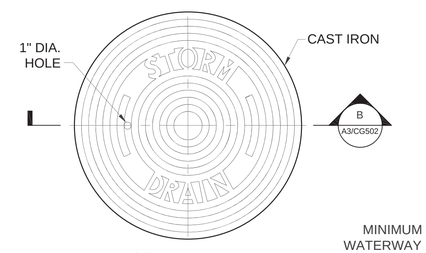

COVER - PLAN

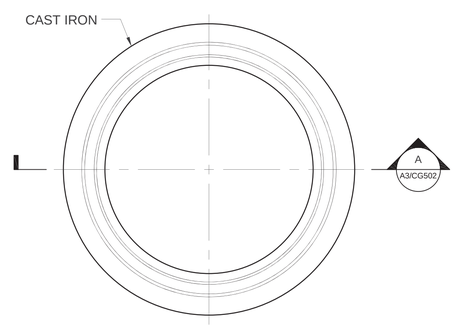

FRAME - PLAN

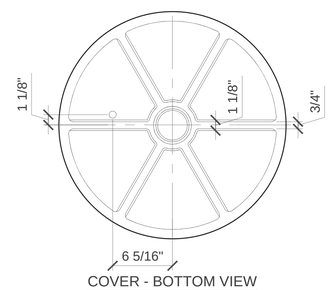

COVER - BOTTOM VIEW

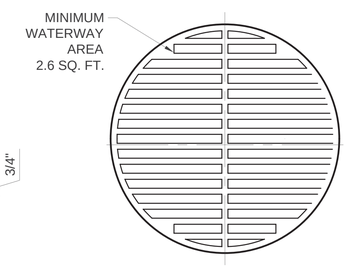

GRATED COVER

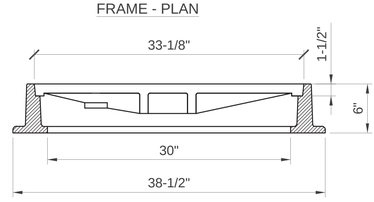

FRAME - SECTION A

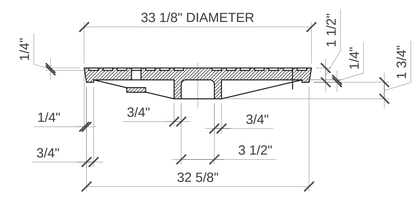

COVER - SECTION B

A3 MANHOLE FRAME AND COVER DETAILS

SCALE: NTS

NAVFAC

STATE OF TEXAS
JENNIFER M. HAYNES
90167
LICENSED
PROFESSIONAL ENGINEER
1/20/2026
TEXAS REGISTERED ENGINEERING FIRM F-2966 SEAL

Jacobs / BURNS McDONNELL
JACOBS/B&M, A JOINT VENTURE
1100 NORTH GLEBE ROAD
SUITE 500
ARLINGTON, VA 22201

A/E Contract No. N62742-20-D-0002
A/E Task Order No. N6274221F0315
JCG NO. 0343/0603
A/E INFO

APPROVED
FOR COMMANDER NAVFAC DATE 02/02/2026

ACTIVITY
AFIMSC APPROVAL PER NAVFAC SAT-TO CHECKLIST

SATISFACTORY TO DATE 31 DEC 2025

DES:	JMH	DRW:	SMC	REV:	ATM
PM/DM					KKK
BRANCH MANAGER					SMK
CHIEF ENG/ARCH					SMK
FIRE PROTECTION					RO

DEPARTMENT OF THE NAVY
NAVAL FACILITIES ENGINEERING SYSTEMS COMMAND
NAVFAC PACIFIC
ANDERSEN AIR FORCE BASE
NAVAL FACILITIES ENGINEERING SYSTEMS COMMAND – PACIFIC
JOINT REGION MARIANAS (JRM)
GUAM

FY24 AUY183012 (P-012)
PDI: NORTH AIRCRAFT PARKING RAMP

DRAINAGE DETAILS

SCALE: AS SHOWN
EPROJECTS NO.: 1665555
CONSTR CONTROL NO.
NAVFAC DRAWING NO. 17361857
SHEET 234 OF 377

CG502

REDESIGN FINAL SUBMITTAL

IF SHEET IS LESS THAN 22" X 34" REDUCED PRINT. USE GRAPHIC SCALES

FILE NAME: U:\BLDG\NAVFAC Pacific\0343060 3 – P-012 North Aircraft Parking Ramp\700 Working Documents\740 Sheets\740.01 Civil\P012_1665555_CG502.dwg
LAYOUT NAME: DRAINAGE DETAILS
PLOTTED: 01/13/2026 5:03pm
USER: CamersS

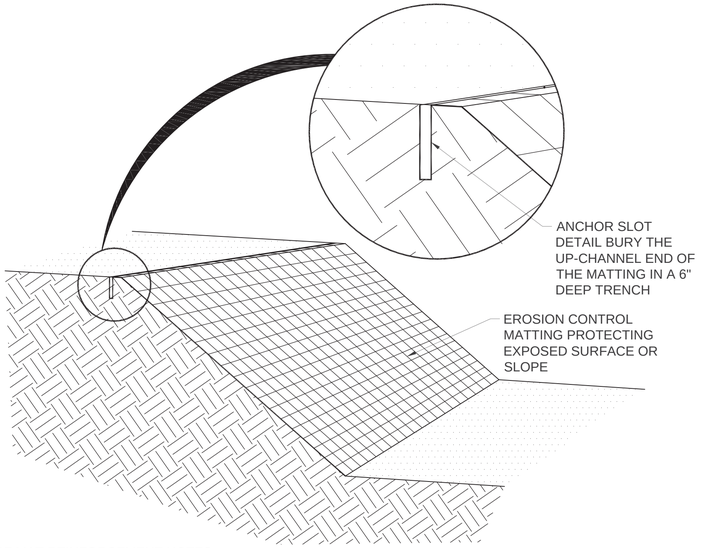

TURF MAT REINFORCEMENT NOTES:

1. BLANKETS MUST BE INSTALLED PARALLEL TO THE DIRECTION OF FLOW OVER THE SURFACE WHICH IS TO BE PROTECTED.
2. THE UP-CHANNEL OF THE BLANKET MUST BE BURIED IN A TRENCH MEASURING 6 INCHES DEEP AND 6 INCHES WIDE FOR THE ENTIRE WIDTH OF THE END. THE SOIL MUST BE BACKFILLED INTO THE TRENCHES AND TAMPED FIRMLY. STAPLES MUST BE PLACED EVERY 12 INCHES ALONG THE END OF THE BLANKET.
3. EDGES OF ADJACENT BLANKETS MUST BE OVERLAPPED A MINIMUM OF 4 INCHES AND MUST BE STAPLED EVERY THREE FEET ALONG THE OVERLAP.
4. WHEN JOINING BLANKETS END TO END, A TRENCH SIMILAR TO THE ONE DUG AT THE BEGINNING OF THE ORIGINAL STRIP MUST BE DUG WITH THE UP-CHANNEL END OF THE STRIP BEING PLACED IN A LIKE MANNER IN THE TRENCH AS THE BEGINNING END OF THE ORIGINAL STRIP. THE END OF THE STRIP BEING FOLDED UNDER AT LEAST 12 INCHES. STAPLES MUST BE INSTALLED AT 12 INCH INTERVALS ALONG THE WIDTH OF THE STRIP NOT MORE THAN 6 INCHES FROM THE TRENCH.
5. IN SITUATIONS WHERE ERODIBLE SOILS, STEEP SLOPES OR HIGH VELOCITY FLOWS ARE ENCOUNTERED, A FOLD OF THE BLANKET MUST BE INSERTED INTO A 6 INCH TRENCH AND TAMPED FIRMLY. STAPLES MUST BE INSTALLED AT 12 INCH INTERVALS ALONG THE TRENCH.
6. STAPLES FOR ANCHORING SOIL STABILIZING MATERIALS MUST BE MADE OF 10 GAUGE WIRE OR HEAVIER. THEY MUST BE 6 TO 10 INCHES IN LENGTH, WITH THE LONGER STAPLES BEING USED IN LOOSE OR UNSTABLE SOILS. THERE MUST BE ONE STAPLE FOR EACH FOUR (4) SQUARE FEET OF BLANKETS TO ASSURE BONDING BETWEEN THE SOIL AND THE BLANKET MATERIAL.

B1 TURF REINFORCEMENT MAT DETAIL
SCALE: NTS

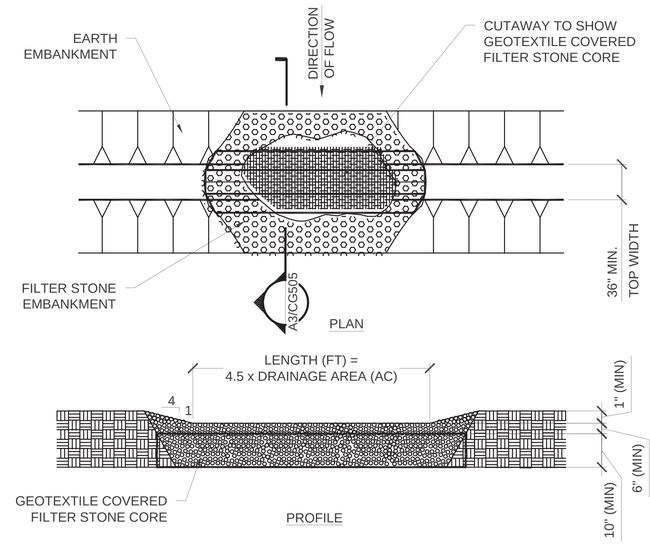

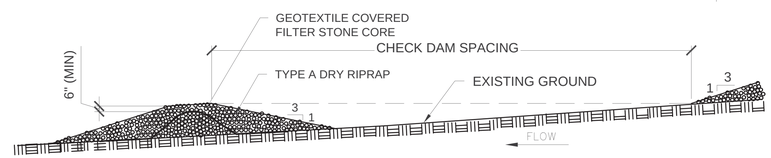

C3 ROCK CHECK DAM
SCALE: NTS

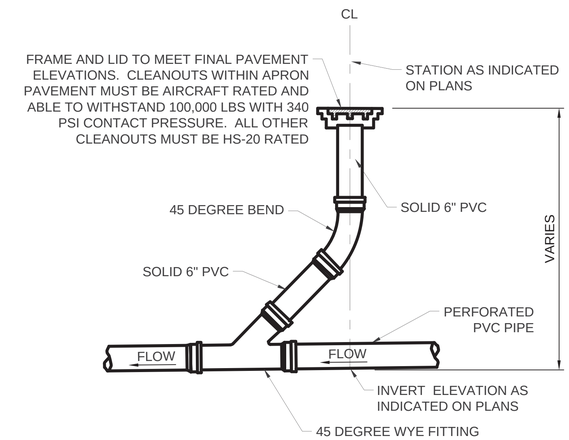

NOTES:

1. WHERE CLEANOUT IS NOT IN PAVEMENT, PROVIDE A 24" X 24" SQUARE PAD MIN. 2" ABOVE ADJACENT GRADE.

C4 TYPICAL SUBDRAIN CLEANOUT
SCALE: NTS

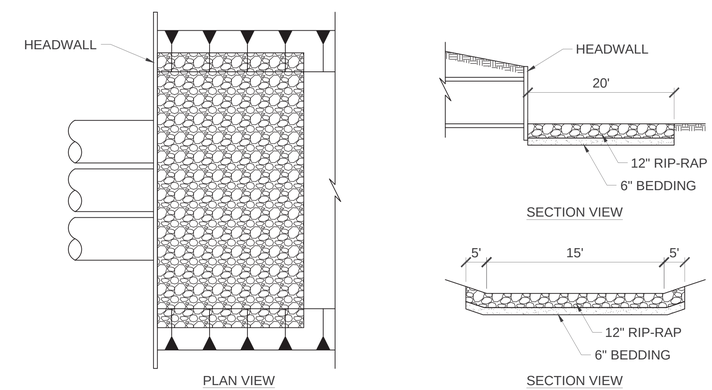

B4 RIP-RAP INSTALLATION DETAIL
SCALE: NTS

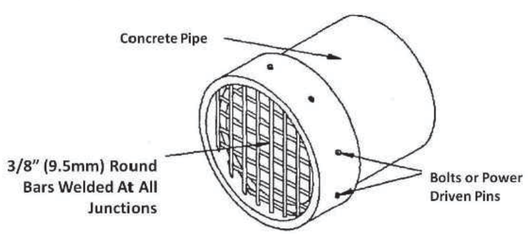

NOTES:

1. FOR CONCRETE PIPES THAT PASS UNDER FENCES, THE GRILL ENDS MUST BE WELDED TO A STEEL RIM THAT FITS SNUGLY OVER THE CONCRETE PIPE.
2. THE RIM AND GRILLWORK MUST BE FASTENED OVER THE CONCRETE PIPE AND BOLTED OR PINNED TO THE RIM OF THE CONCRETE PIPE (AS SHOWN).
3. GRILL ENDS MAY BE EMBEDDED IN A CONCRETE HEADWALL THAT ENCAPSULATES THE CONCRETE PIPE.
4. GRILLS MUST BE PLACED ON THE ATTACK SIDE OF THE FENCE.
5. STEEL USED FOR THE GRILL MUST BE IN ACCORDANCE WITH ASMTA529 AND THE CORROSION PREVENTION CONTROL SECTION OF UFC 4-022-03.

A1 CONCRETE CULVERT GRILL
SCALE: NTS

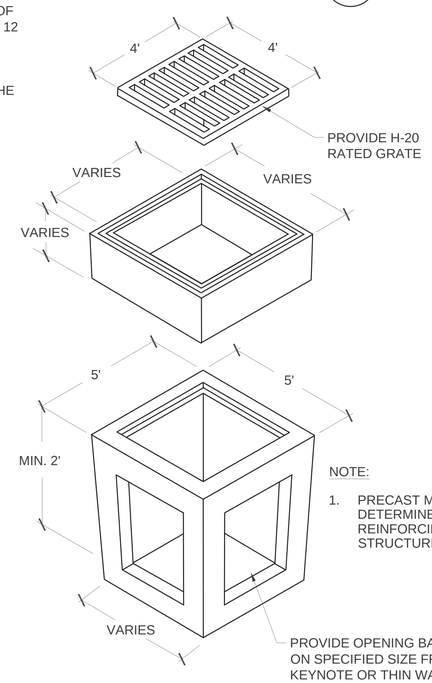

NOTE:

1. PRECAST MANUFACTURER MUST DETERMINE WALL THICKNESS AND REINFORCING REQUIREMENTS. STRUCTURE MUST BE H-20 RATED.

A3 CATCH BASIN
SCALE: NTS

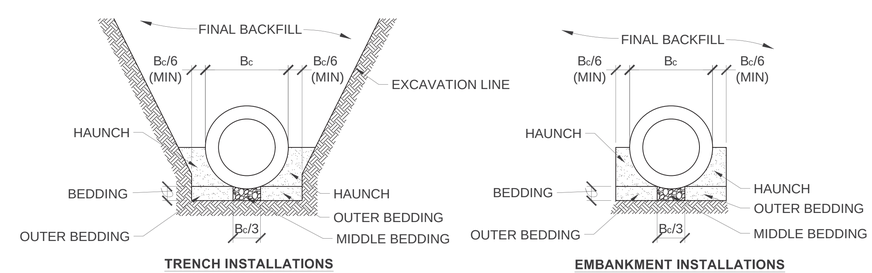

NOTES:

1. MINIMUM BEDDING THICKNESS MUST BE 4 INCHES. MINIMUM BEDDING THICKNESS MUST BE INCREASED TO 6 INCHES IN ROCK CUTS.

A4 CONCRETE CIRCULAR PIPE BEDDING DETAILS
SCALE: NTS

STATE OF TEXAS
JENNIFER M. HAYNES
90167
LICENSED PROFESSIONAL ENGINEER
1/20/2026
TEXAS REGISTERED ENGINEERING FIRM F-2966 SEAL

Jacobs / BURNS McDONNELL
JACOBS/B&M, A JOINT VENTURE
1100 NORTH GLEBE ROAD
SUITE 500
ARLINGTON, VA 22201
A/E Contract No. N62742-20-D-0002
A/E Task Order No. N6274221F0315
JCG NO. 03430603
A/E INFO

APPROVED
FOR COMMANDER NAVFAC DATE 02/02/2026

ACTIVITY
AFIMSC APPROVAL PER NAVFAC SAT-TO CHECKLIST

SATISFACTORY TO DATE 31 DEC 2025

DES:	JMH	DRW:	SMC	REV:	ATM
PM/DM					KKK
BRANCH MANAGER					SMK
CHIEF ENG/ARCH					SMK
FIRE PROTECTION					RO

DEPARTMENT OF THE NAVY
NAVAL FACILITIES ENGINEERING SYSTEMS COMMAND
NAVFAC PACIFIC
NAVAL FACILITIES ENGINEERING SYSTEMS COMMAND – PACIFIC
JOINT REGION MARIANAS (JRM)
ANDERSEN AIR FORCE BASE
GUAM

FY24 AJJY183012 (P-012),
PDI: NORTH AIRCRAFT PARKING RAMP

DRAINAGE DETAILS

SCALE: AS SHOWN
EPROJECTS NO.: 1665555
CONSTR CONTROL NO.
NAVFAC DRAWING NO. 17361858
SHEET 235 OF 377

CG503

REDESIGN FINAL SUBMITTAL

FILE NAME: U:\BLDG\NAVFAC Pacific\D3430603 – P-012 North Aircraft Parking Ramp\700 Working Documents\740 Sheets\740.01 Civil\P012_1665555_CG503.dwg
LAYOUT NAME: DRAINAGE DETAILS
PLOTTED: 01/13/2026 5:01pm
USER: CamersS

IF SHEET IS LESS THAN 22" X 34" REDUCED PRINT. USE GRAPHIC SCALES

TABLE OF VARIABLE DIMENSIONS AND QUANTITIES FOR ONE HEADWALL (5)

Slope	Dia of Pipe (D)	Values for One Pipe			Values Must Be Added for Each Addt'l Pipe		
		W	Reinf (Lbs) (1)	Conc (CY) (2)	W	Reinf (Lbs) (1)	Conc (CY) (2)
3:1	18"	16' - 6"	228	2.2	2' - 8"	19	0.3
	24"	20' - 0"	323	3.0	3' - 7"	33	0.4
	30"	23' - 6"	415	4.0	4' - 4"	40	0.5
4:1	18"	21' - 6"	308	2.9	2' - 8"	19	0.3
	24"	26' - 0"	430	3.9	3' - 7"	34	0.4
	30"	30' - 6"	539	5.2	4' - 4"	40	0.6

TABLE OF CONSTANT DIMENSIONS

Dia of Pipe (D)	G	K (5)	H	T	E
18"	1' - 2"	1' - 0"	3' - 2"	0' - 9"	1' - 9"
24"	1' - 7"	1' - 0"	3' - 8"	0' - 9"	2' - 0"
30"	1' - 10"	1' - 0"	4' - 2"	0' - 9"	2' - 3"

TABLE OF REINFORCING STEEL (6)

Bar	Size	Spa	No.
A1	#5	~	2
A2	#5	1' - 6"	~
E	#5	~	2
F	#5	1' - 0"	~

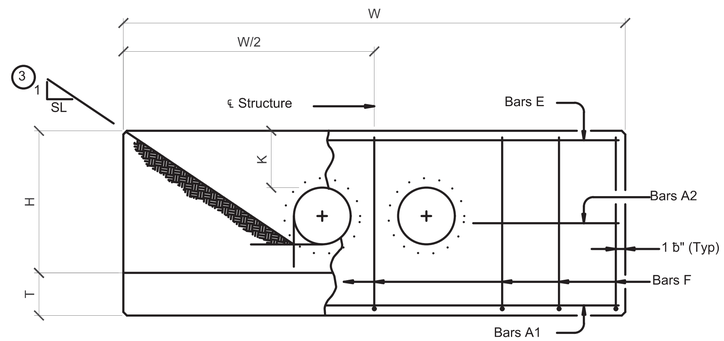

ELEVATION

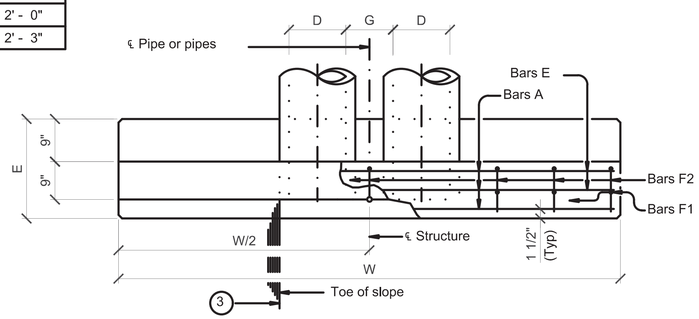

PLAN OF NON-SKEWED PIPES

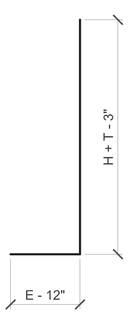

BARS F2

(1) Total quantities include one 3'-1" lap for bars over 60' in length.

(2) Quantities shown are for concrete pipe and will increase slightly for metal pipe installations.

(3) Indicated slope is perpendicular to centerline pipe or pipes.

(4) For vehicle safety, construct curbs no more than 3" above finished grade. Reduce curb heights, if necessary, to meet these requirements. No changes will be made in quantities and no additional compensation will be allowed for this work.

(5) Dimensions shown are usual and maximum.

(6) Quantities shown are for one structure end only (one headwall).

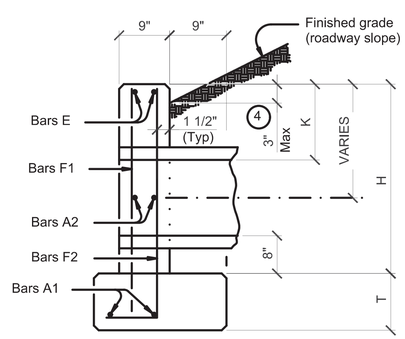

SECTION AT CENTER OF PIPE

MATERIAL NOTES:
Provide Grade 60 reinforcing steel.
Provide Class C concrete (f'c = 3,600 psi).

GENERAL NOTES:
Designed according to AASHTO LRFD Bridge Design Specifications.
Do not mount bridge rails directly to these culvert headwalls.
This standard may not be used for wall heights, H, exceeding the values shown.

Cover dimensions are clear dimensions, unless noted otherwise.
Reinforcing dimensions are out-to-out of bars.

A1 CONCRETE HEADWALL WITH PARALLEL WINGS
SCALE: NTS

TABLE OF VARIABLE DIMENSIONS & QUANTITIES FOR ONE HEADWALL (5)

Slope	Dia of Pipe (D)	30° Skew					
		Values for One Pipe			Values Must Be Added for Each Addt'l Pipe		
		W	Reinf (Lbs) (1)	Conc (CY) (2)	W	Reinf (Lbs) (1)	Conc (CY) (2)
4:1	24"	30' - 0"	499	4.5	4' - 1 ¾"	36	0.5

TABLE OF CONSTANT DIMENSIONS

Dia of Pipe (D)	G	K (5)	H	T	E
24"	1' - 7"	1' - 0"	3' - 8"	0' - 9"	2' - 0"

TABLE OF REINFORCING STEEL (6)

Bar	Size	Spa	No.
A1	#5	~	2
A2	#5	1' - 6"	~
E	#5	~	2
F	#5	1' - 0"	~

MATERIAL NOTES:
Provide Grade 60 reinforcing steel.
Provide Class C concrete (f'c = 3,600 psi).

GENERAL NOTES:
Designed according to AASHTO LRFD Bridge Design Specifications.
Do not mount bridge rails directly to these culvert headwalls.
This standard may not be used for wall heights, H, exceeding the values shown.

Cover dimensions are clear dimensions, unless noted otherwise.
Reinforcing dimensions are out-to-out of bars.

(1) Total quantities include one 3'-1" lap for bars over 60' in length.

(2) Quantities shown are for concrete pipe and will increase slightly for metal pipe installations.

(3) Indicated slope is perpendicular to centerline pipe or pipes.

(4) For vehicle safety, construct curbs no more than 3" above finished grade. Reduce curb heights, if necessary, to meet these requirements. No changes will be made in quantities and no additional compensation will be allowed for this work.

(5) Dimensions shown are usual and maximum.

(6) Quantities shown are for one structure end only (one headwall).

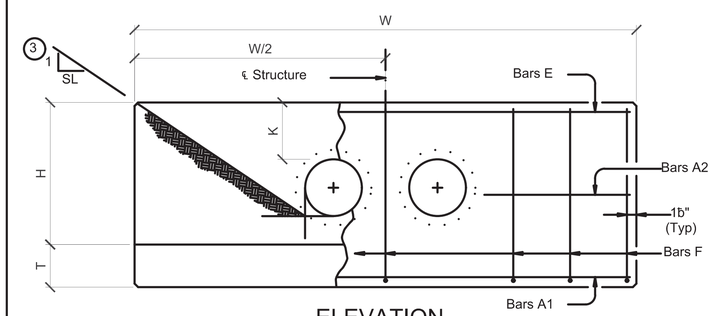

ELEVATION

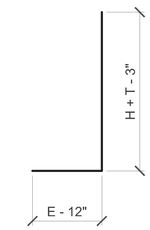

BARS F2

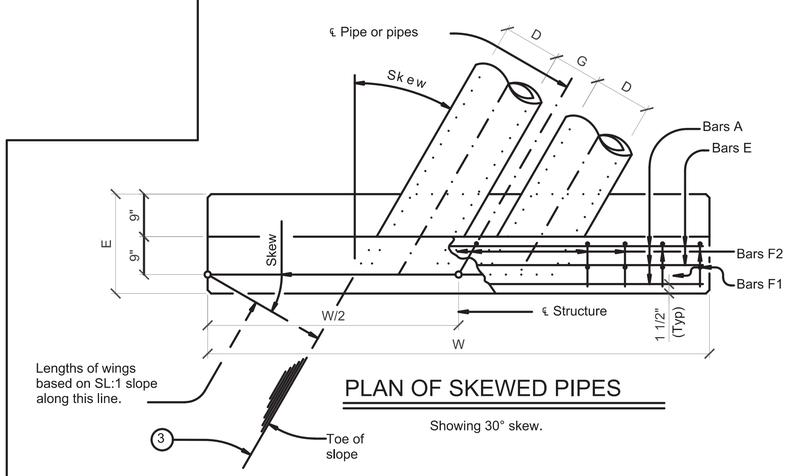

PLAN OF SKEWED PIPES

Showing 30° skew.

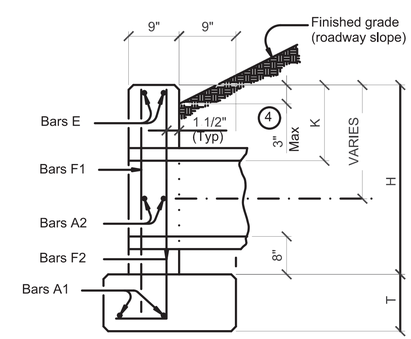

SECTION AT CENTER OF PIPE

A4 CONCRETE HEADWALL WITH PARALLEL WINGS - SKEWED
SCALE: NTS

NAVFAC

STATE OF TEXAS
JENNIFER M. HAYNES
90167
LICENSED PROFESSIONAL ENGINEER
1/20/2026
TEXAS REGISTERED ENGINEERING FIRM F-3566 SEAL

Jacobs / BURNS McDONNELL
JACOBS/B&M, A JOINT VENTURE
1100 NORTH GLEBE ROAD
SUITE 500
ARLINGTON, VA 22201
A/E Contract No. N62742-20-D-0002
A/E Task Order No. N62742-21F0315
JEG NO. D3430603
A/E INFO

APPROVED
FOR COMMANDER NAVFAC DATE 02/02/2026

ACTIVITY
AFIMSC APPROVAL PER NAVFAC SAT-TO CHECKLIST
SATISFACTORY TO DATE 31 DEC 2025

DES:	JMH	DRW: SMC	REV: ATM
PM/DM			KKK
BRANCH MANAGER			SMK
CHIEF ENG/ARCH			SMK
FIRE PROTECTION			RO

DEPARTMENT OF THE NAVY
NAVAL FACILITIES ENGINEERING SYSTEMS COMMAND
NAVFAC PACIFIC
NAVAL FACILITIES ENGINEERING SYSTEMS COMMAND ~ PACIFIC
JOINT REGION MARIANAS (JRM)
ANDERSEN AIR FORCE BASE
GUAM

FY24 AJJY183012 (P-012),
PDI: NORTH AIRCRAFT PARKING RAMP

DRAINAGE DETAILS

SCALE: AS SHOWN
EPROJECTS NO.: 1665555
CONSTR CONTROL NO.
NAVFAC DRAWING NO. 17361859
SHEET 236 OF 377

CG504

REDESIGN FINAL SUBMITTAL

IF SHEET IS LESS THAN 22" X 34"
REDUCED PRINT. USE GRAPHIC SCALES

FILE NAME: U:\BLDG\NAVFAC Pacific\D3430603 - P-012 North Aircraft Parking Ramp\700 Working Documents\740 Sheets\740.01 Civil\P012_1665555_CG504.dwg
LAYOUT NAME: DRAINAGE DETAILS
PLOTTED: 01/13/2026 9:25am
USER: CamvaS

TABLE OF VARIABLE DIMENSIONS AND QUANTITIES FOR ONE HEADWALL (5)

Slope	Dia of Pipe (D)	Values for One Pipe						Values Must Be Added for Each Addt'l Pipe		
		W	X	Y	L	Reinf (Lbs)	Conc (CY) (1)	X and W	Reinf (Lbs)	Conc (CY) (1)
4:1	15"	8' - 10 ¾"	3' - 5 ¼"	6' - 8"	9' - 5 ¼"	187	1.5	2' - 6"	36	0.5
	24"	13' - 0 ½"	4' - 7"	9' - 8"	13' - 8"	307	2.8	4' - 1 ¾"	75	1.0

TABLE OF CONSTANT DIMENSIONS

Dia of Pipe (D)	G	K (4)	H
15"	0' - 11"	1' - 0"	2' - 3"
24"	1' - 7"	1' - 0"	3' - 0"
18"	1' - 2"	1' - 0"	2' - 6"
21"	1' - 4"	1' - 0"	2' - 9"

TABLE OF REINFORCING STEEL (5)

Bar	Size	Spa	No.
A	#4	1' - 0"	~
B	#3	1' - 6"	~
CL & CS	#4	1' - 0"	~
D	#3	1' - 0"	~
E	#5	~	4
F	#5	~	~
G	#3	~	2
SL & SS	#4	~	6
VL & VS	#4	1' - 0"	~
WL & WS	#5	~	4

(1) Quantities shown are for concrete pipe and will increase slightly for metal pipe installations.

(2) For vehicle safety, construct curbs no more than 3" above finished grade. Reduce curb heights, if necessary, to meet these requirements. No changes will be made in quantities and no additional compensation will be allowed for this work.

(3) Provide a 1'-0" footing as shown where required to maintain 4" minimum cover for pipes.

(4) Dimensions shown are usual and maximum.

(5) Quantities shown are for one structure end only (one headwall).

(6) Min Length = $6" + 3" \times \left(\frac{12 \times H - 7}{12 \times L}\right)$

Max Length = $12 \times H - 3" \times \left(\frac{12 \times H - 7}{12 \times L}\right) - 1"$

(7) Lengths of wings based on SL:1 slope along this line.

MATERIAL NOTES:
Provide Grade 60 reinforcing steel.
Provide Class C concrete (f'c = 3,600 psi).

GENERAL NOTES:
Designed according to AASHTO LRFD Bridge Design Specifications.
Do not mount bridge rails directly to these culvert headwalls.
This standard may not be used for wall heights, H, exceeding the values shown.

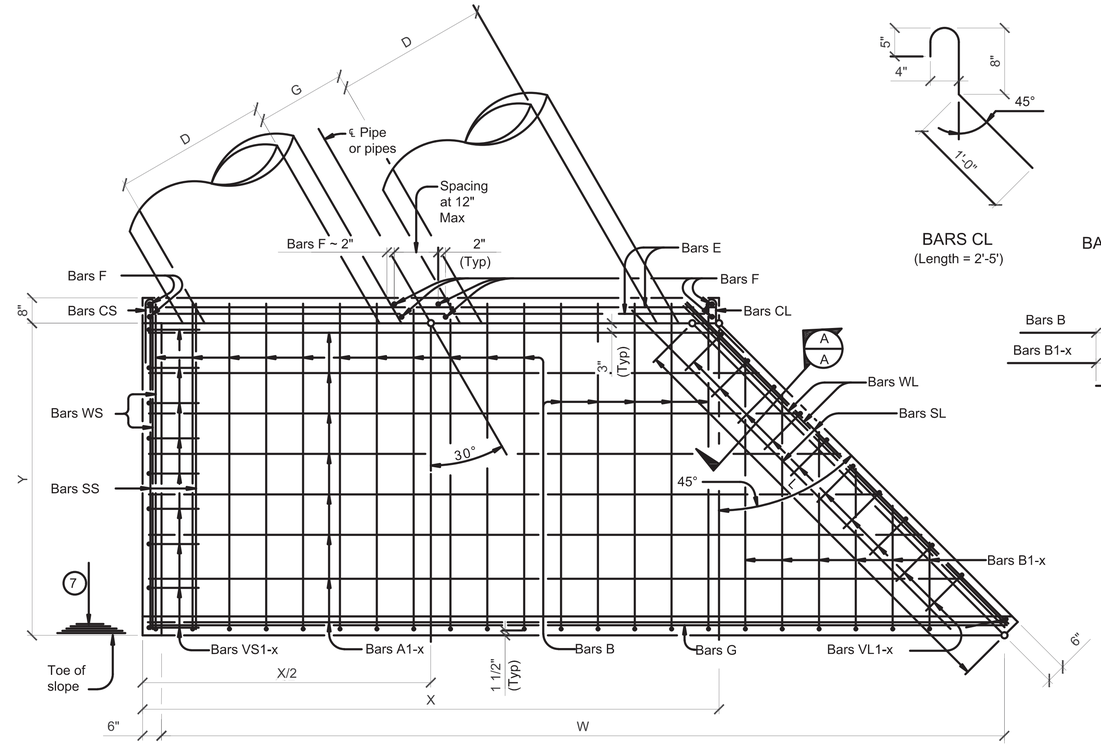

PLAN

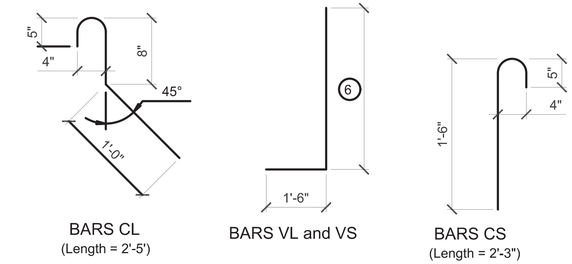

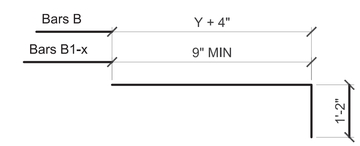

BARS B and B1-x

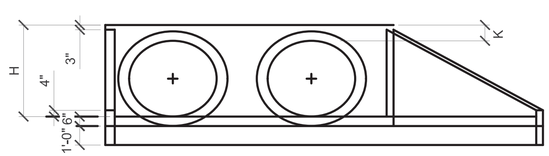

ELEVATION

(Showing dimensions.)

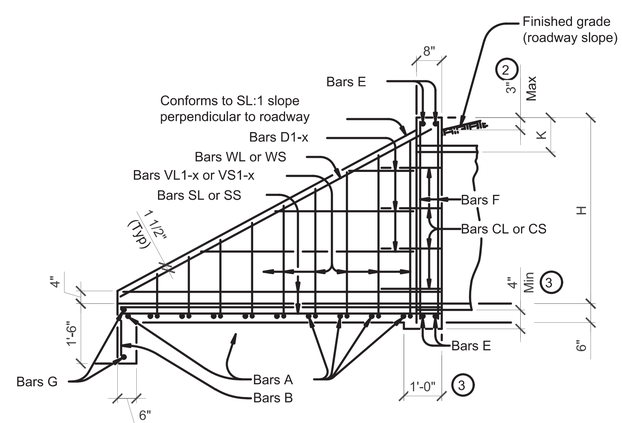

TYPICAL WING ELEVATION

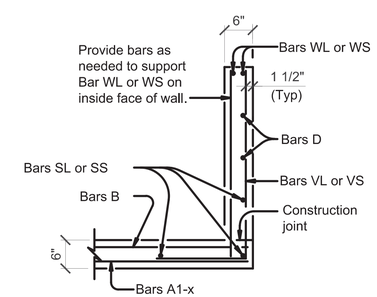

SECTION A-A

A1 CONCRETE HEADWALLS W/ FLARED WINGS FOR 30° SKEW PIPE CULVERTS
SCALE: NTS

STATE OF TEXAS
JENNIFER M. HAYNES
90167
LICENSED PROFESSIONAL ENGINEER
1/20/2026
TEXAS REGISTERED ENGINEERING FIRM F-3266 SEAL

Jacobs / BURNS McDONNELL
JACOBS/B&M, A JOINT VENTURE
1100 NORTH GLEBE ROAD
SUITE 500
ARLINGTON, VA 22201
A/E Contract No. N62742-20-D-0002
A/E Task Order No. N62742219103/15
JCG NO. 03430603
A/E INFO

APPROVED
FOR COMMANDER NAVFAC DATE 02/02/2026

ACTIVITY
AFIMSC APPROVAL PER NAVFAC SAT-TO CHECKLIST

SATISFACTORY TO DATE 31 DEC 2025

DES:	JMH	DRW:	SMC	REV:	ATM
PM/DM					KKK
BRANCH MANAGER					SMK
CHIEF ENG/ARCH					SMK
FIRE PROTECTION					RO

DEPARTMENT OF THE NAVY
NAVFAC PACIFIC
ANDERSEN AIR FORCE BASE
NAVAL FACILITIES ENGINEERING SYSTEMS COMMAND
NAVAL FACILITIES ENGINEERING SYSTEMS COMMAND ~ PACIFIC
JOINT REGION MARIANAS (JRM)
GUAM
FY24 AJJY183012 (P-012),
PDI: NORTH AIRCRAFT PARKING RAMP
DRAINAGE DETAILS

SCALE: AS SHOWN
EPROJECTS NO.: 1665555
CONSTR CONTROL NO.
NAVFAC DRAWING NO. 17361860
SHEET 237 OF 377

CG505

REDESIGN FINAL SUBMITTAL

IF SHEET IS LESS THAN 22" X 34" REDUCED PRINT. USE GRAPHIC SCALES

FILE NAME: U:\BLDG\NAVFAC Pacific\03430603 - P-012 North Aircraft Parking Ramp\700 Working Documents\740 Sheets\740.01 Civil\P012_1665555_CG505.dwg
LAYOUT NAME: DRAINAGE DETAILS
PLOTTED: 01/13/2026 9:26am
USER: CameroS

TABLE OF VARIABLE DIMENSIONS AND QUANTITIES FOR ONE HEADWALL (5)

Slope	Dia of Pipe (D)	Values for One Pipe						Values Must be Added for Each Add'l Pipe		
		W	X	Y	L	Reinf (Lbs)	Conc (CY) (1)	X and W	Reinf (Lbs)	Conc (CY) (1)
4:1	15"	5' - 9 ½"	3' - 0 ¼"	6' - 8"	7' - 8 ½"	162	1.2	2' - 3"	33	0.4
	24"	8' - 6 ¾"	4' - 0 ¾"	9' - 8"	11' - 2"	264	2.2	3' - 8 ½"	68	0.9

TABLE OF CONSTANT DIMENSIONS

Dia of Pipe (D)	G	K (4)	H
15"	0' - 11"	1' - 0"	2' - 3"
24"	1' - 7"	1' - 0"	3' - 0"

TABLE OF REINFORCING STEEL (5)

Bar	Size	Spa	No.
A	#4	1' - 0"	~
B	#3	1' - 6"	~
CL & CS	#4	1' - 0"	~
D	#3	1' - 0"	~
E	#5	~	4
F	#5	~	~
G	#3	~	2
SL & SS	#4	~	6
VL & VS	#4	1' - 0"	~
WL & WS	#5	~	4

(1) Quantities shown are for concrete pipe and will increase slightly for metal pipe installations.

(2) For vehicle safety, construct curbs no more than 3" above finished grade. Reduce curb heights, if necessary, to meet these requirements. No changes will be made in quantities and no additional compensation will be allowed for this work.

(3) Provide a 1'-0" footing as shown where required to maintain 4" minimum cover for pipes.

(4) Dimensions shown are usual and maximum.

(5) Quantities shown are for one structure end only (one headwall).

(6) Min Length = $6" + 3" \times \left(\frac{12 \times H - 7}{12 \times L}\right)$

Max Length = $12 \times H - 3" \times \left(\frac{12 \times H - 7}{12 \times L}\right) - 1"$

(7) Lengths of wings based on SL:1 slope along this line.

MATERIAL NOTES:

Provide Grade 60 reinforcing steel.
Provide Class C concrete (f'c = 3,600 psi).

GENERAL NOTES:

Designed according to AASHTO LRFD Bridge Design Specifications.
Do not mount bridge rails directly to these culvert headwalls.
This standard may not be used for wall heights, H, exceeding the values shown.

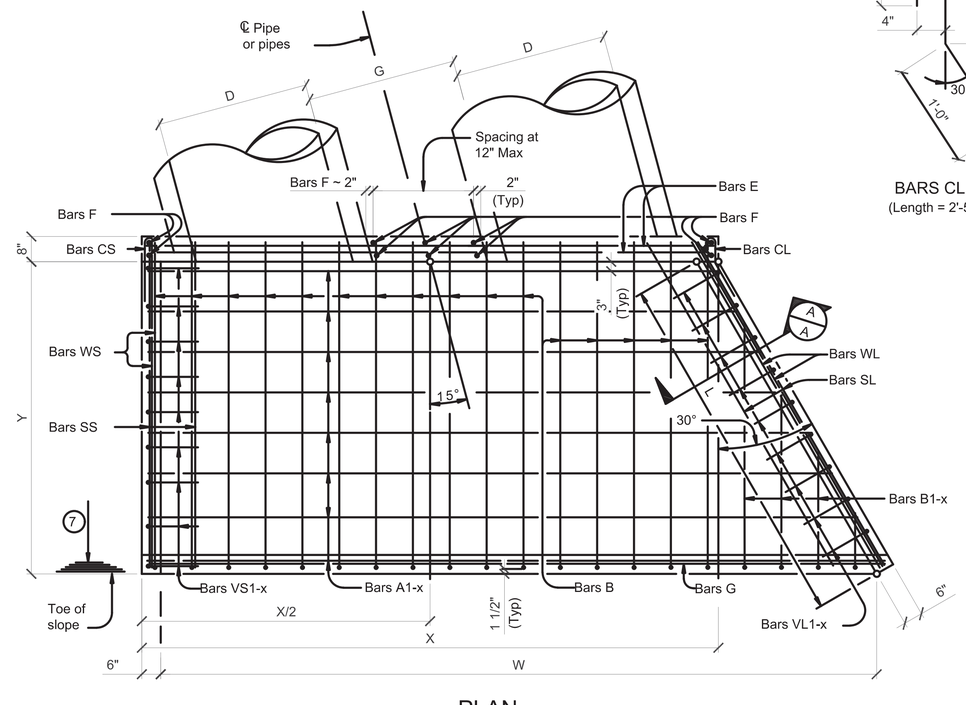

PLAN

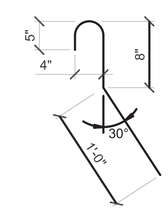

BARS CL
(Length = 2'-5")

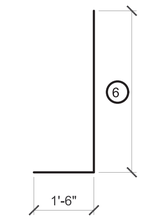

BARS VL and VS

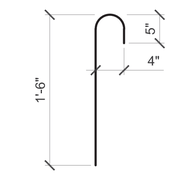

BARS CS
(Length = 2'-3")

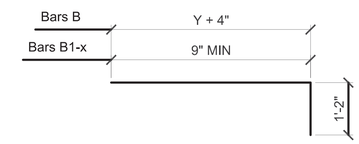

BARS B and B1-x

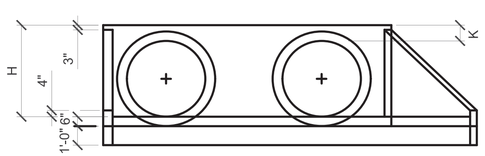

ELEVATION

(Showing dimensions.)

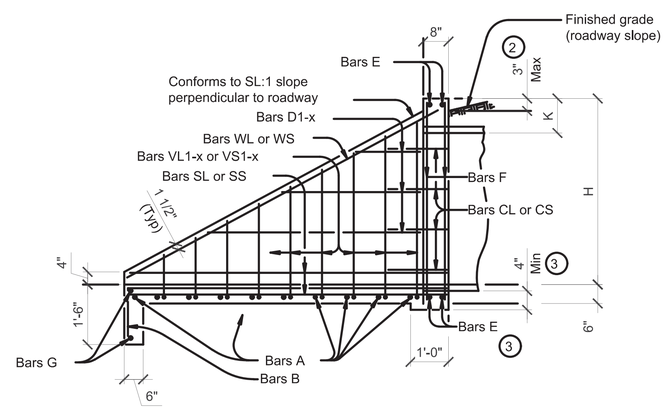

TYPICAL WING ELEVATION

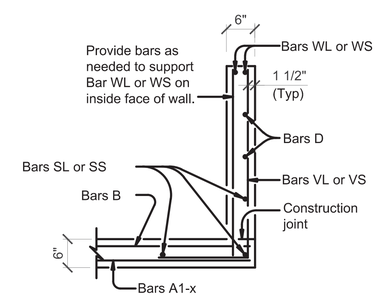

SECTION A-A

A1 CONCRETE HEADWALLS W/ FLARED WINGS FOR 15° SKEW PIPE CULVERTS
SCALE: NTS

NAVFAC

STATE OF TEXAS
JENNIFER M. HAYNES
90167
LICENSED PROFESSIONAL ENGINEER
1/20/2026
TEXAS REGISTERED ENGINEERING FIRM F-3966 SEAL

Jacobs / BURNS McDONNELL
JACOBS/B&M, A JOINT VENTURE
1100 NORTH GLEBE ROAD
SUITE 500
ARLINGTON, VA 22201
A/E Contract No. N62742-20-D-0002
A/E Task Order No. N6274221F0315
JCG NO. 03430603
A/E INFO

APPROVED
FOR COMMANDER NAVFAC DATE 02/02/2026

ACTIVITY
AFIMSC APPROVAL PER NAVFAC SAT-TO CHECKLIST

SATISFACTORY TO DATE 31 DEC 2025

DES:	JMH	DRW:	SMC	REV:	ATM
PM/DM					KKK
BRANCH MANAGER					SMK
CHIEF ENG/ARCH					SMK
FIRE PROTECTION					RO

DEPARTMENT OF THE NAVY
NAVFAC PACIFIC
NAVAL FACILITIES ENGINEERING SYSTEMS COMMAND
NAVAL FACILITIES ENGINEERING SYSTEMS COMMAND ~ PACIFIC
JOINT REGION MARIANAS (JRM)
ANDERSEN AIR FORCE BASE
GUAM

FY24 AJJY183012 (P-012),
PDI: NORTH AIRCRAFT PARKING RAMP

DRAINAGE DETAILS

SCALE: AS SHOWN
EPROJECTS NO.: 1665555
CONSTR CONTROL NO.
NAVFAC DRAWING NO. 17361861
SHEET 238 OF 377

CG506

REDESIGN FINAL SUBMITTAL

IF SHEET IS LESS THAN 22" X 34" REDUCED PRINT. USE GRAPHIC SCALES

FILE NAME: U:\BLDG\NAVFAC Pacific\D3430603 - P-012 North Aircraft Parking Ramp\700 Working Documents\740 Sheets\740.01 Civil\P012_1665555_CG506.dwg
LAYOUT NAME: DRAINAGE DETAILS
PLOTTED: 01/13/2026 9:26am
USER: CamersS

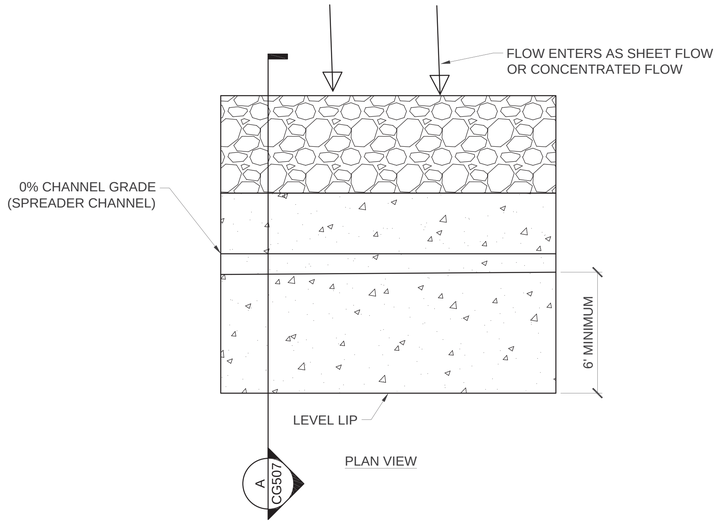

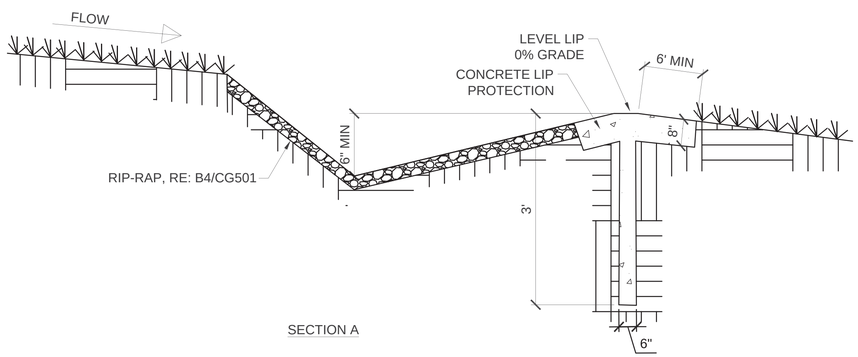

B1 LEVEL SPREADER DETAIL
SCALE: NTS

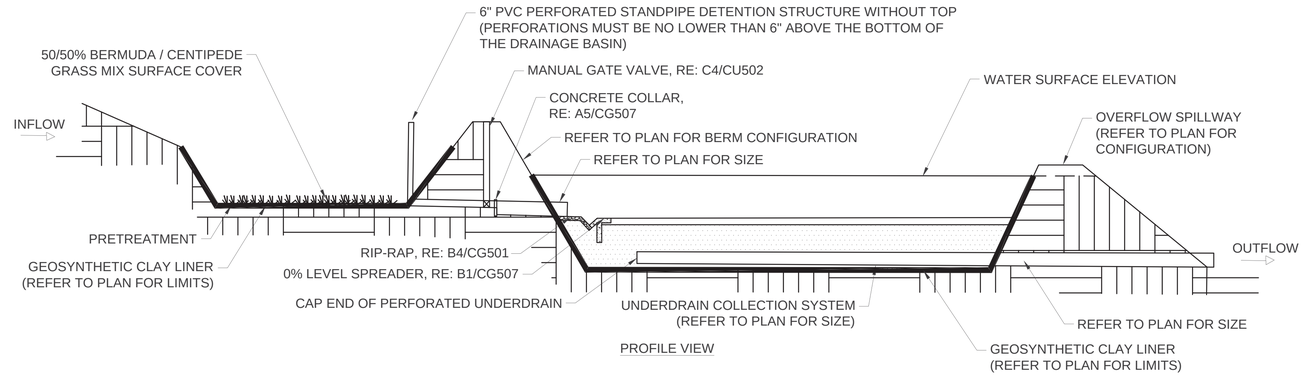

B4 SAND FILTER DETAIL
SCALE: NTS

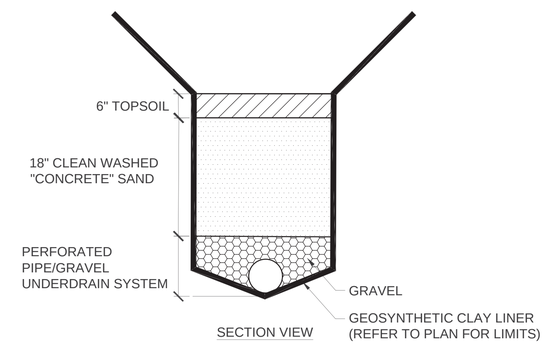

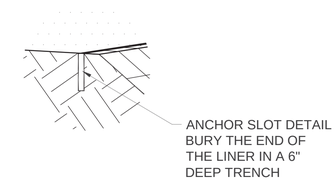

B5 GEOSYNTHETIC CLAY LINER ANCHOR DETAIL
SCALE: NTS

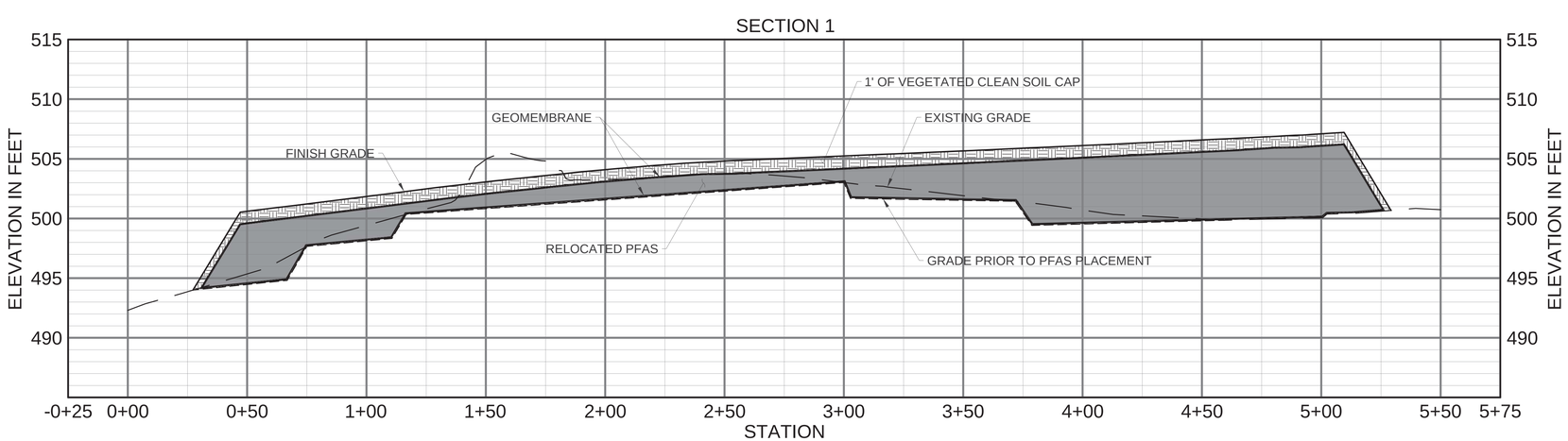

A1 TYPICAL PFAS RELOCATION SECTION
SCALE: NTS

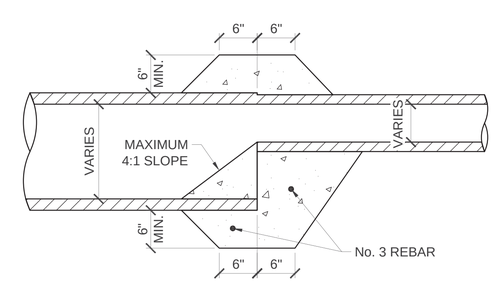

A5 CONCRETE COLLAR DETAIL
SCALE: NTS

1	REVISED DETAIL B4
01/26/2026	

NAVFAC

STATE OF TEXAS
JENNIFER M. HAYNES
90167
LICENSED
PROFESSIONAL ENGINEER
1/27/2026
TEXAS REGISTERED ENGINEERING FIRM F-2966 SEAL

Jacobs / BURNS MCDONNELL
JACOBS/B&M, A JOINT VENTURE
1100 NORTH GLEBE ROAD
SUITE 500
ARLINGTON, VA 22201

A/E Contract No. N62742-20-D-0002
A/E Task Order No. N6274221F0315
JCG NO. 03430603
A/E INFO

APPROVED
FOR COMMANDER NAVFAC DATE 02/02/2026

ACTIVITY
AFIMSC APPROVAL PER NAVFAC SAT-TO CHECKLIST

SATISFACTORY TO DATE 31 DEC 2025

DES:	JMH	DRW:	SMC	REV:	ATM
PM/DM					KKK
BRANCH MANAGER					SMK
CHIEF ENG/ARCH					SMK
FIRE PROTECTION					RO

DEPARTMENT OF THE NAVY
NAVFAC PACIFIC
NAVAL FACILITIES ENGINEERING SYSTEMS COMMAND
NAVAL FACILITIES ENGINEERING SYSTEMS COMMAND – PACIFIC
JOINT REGION MARIANAS (JRM)
ANDERSEN AIR FORCE BASE
GUAM

FY24 AJJY183012 (P-012),
PDI: NORTH AIRCRAFT PARKING RAMP

SAND FILTER DETAILS

SCALE: AS SHOWN
EPROJECTS NO.: 1665555
CONSTR CONTROL NO.
NAVFAC DRAWING NO.
17361862
SHEET 239 OF 377

CG507

REDESIGN FINAL SUBMITTAL

IF SHEET IS LESS THAN 22" X 34"
REDUCED PRINT. USE GRAPHIC SCALES

FILE NAME: U:\BLDG\NAVFAC Pacific\03430603 – P-012 North Aircraft Parking Ramp\700 Working Documents\740 Sheets\740.01 Civil\P012_1665555_CG507.dwg
LAYOUT NAME: LEVEL SPREADER DETAIL
PLOTTED: 01/28/2026 2:44pm
USER: CamernS

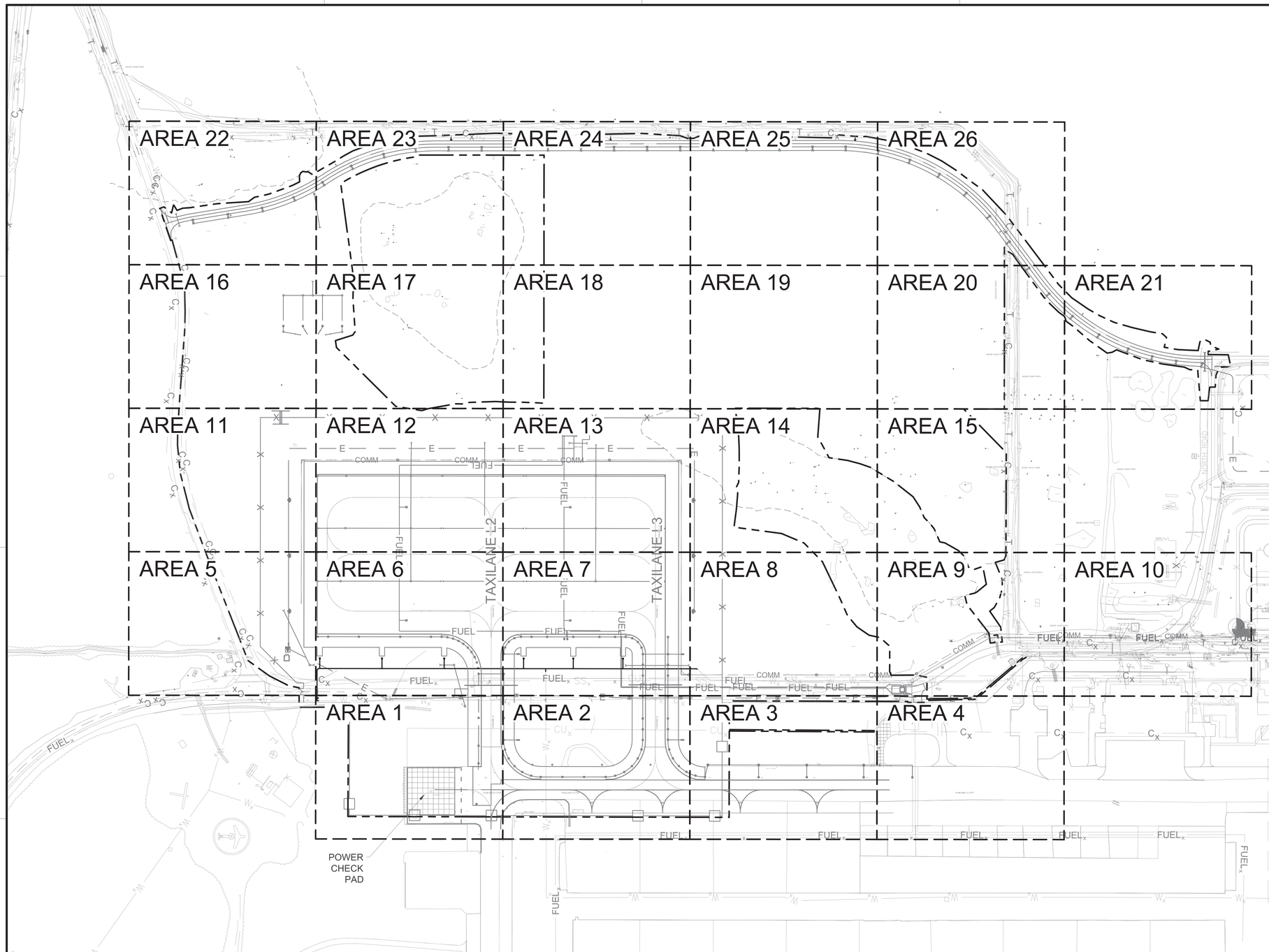

A1 OVERALL UTILITY PLAN
SCALE: 1" = 200'

GENERAL NOTES

A	REFER TO SHEET ES101 - ES104 FOR SITE LIGHTING INFORMATION.

LEGEND

F	FIRE LINE
SD	STORM DRAIN
FUEL	FUEL LINE
E	UNDERGROUND ELECTRIC
COMM	UNDERGROUND COMM.
UE1	PVC CONC. ENCASED DUCTBANK
UE2	PVC CONC. ENCASED W/ REBAR DUCTBANK
T_x	EXISTING PHONE LINE
W_x	EXISTING WATERLINE
SS_x	EXISTING SANITARY SEWER
$FUEL_x$	EXISTING UNDERGROUND FUEL LINE
E_x	EXISTING UNDERGROUND ELECTRIC
C_x	EXISTING UNDERGROUND COMM.
	LIMITS OF DISTURBANCE
	FIRE HYDRANT, RE: C1/CU502
	GATE VALVE, RE: C4/CU502

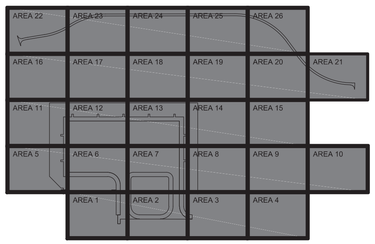

OVERALL
KEY PLAN

GRAPHIC SCALE
0 100' 200' 400'
SCALE: 1"=200'

NORTH ARROW
TRUE N

NAVFAC

STATE OF TEXAS
JENNIFER M. HAYNES
90167
LICENSED
PROFESSIONAL ENGINEER
1/27/2026
TEXAS REGISTERED ENGINEERING FIRM F-3066 SEAL

Jacobs / BURNS McDONNELL
JACOBS/B&M, A JOINT VENTURE
1100 NORTH GLEBE ROAD
SUITE 500
ARLINGTON, VA 22201

A/E Contract No. N62742-20-D-0002
A/E Task Order No. N62742-21F0315
JEG NO. D3430603 A/E INFO

APPROVED
FOR COMMANDER NAVFAC DATE 02/02/2026

ACTIVITY
AFIMSC APPROVAL PER NAVFAC SAT-TO CHECKLIST

SATISFACTORY TO DATE 31 DEC 2025

DES:	JMH	DRW:	SMC	REV:	ATM
PM/DM	KKK				
BRANCH MANAGER	SMK				
CHIEF ENG/ARCH	SMK				
FIRE PROTECTION	RO				

DEPARTMENT OF THE NAVY
NAVAL FACILITIES ENGINEERING SYSTEMS COMMAND
NAVFAC PACIFIC
NAVAL FACILITIES ENGINEERING SYSTEMS COMMAND ~ PACIFIC
JOINT REGION MARIANAS (JRM)
ANDERSEN AIR FORCE BASE
GUAM

FY24 AJJY183012 (P-012),
PDI: NORTH AIRCRAFT PARKING RAMP

OVERALL UTILITY PLAN

SCALE: AS SHOWN
EPROJECTS NO.: 1665555
CONSTR CONTROL NO.
NAVFAC DRAWING NO. 17361863
SHEET 240 OF 377

CU101

REDESIGN FINAL SUBMITTAL

IF SHEET IS LESS THAN 22" X 34" REDUCED PRINT. USE GRAPHIC SCALES

FILE NAME: U:\BLDG\NAVFAC Pacific\D3430603 - P-012 North Aircraft Parking Ramp\700 Working Documents\740 Sheets\740.01 Civil\P012_1665555_CU101.dwg
LAYOUT NAME: OVERALL UTILITY PLAN
PLOTTED: 01/27/2026 11:31pm
USER: CamaroS

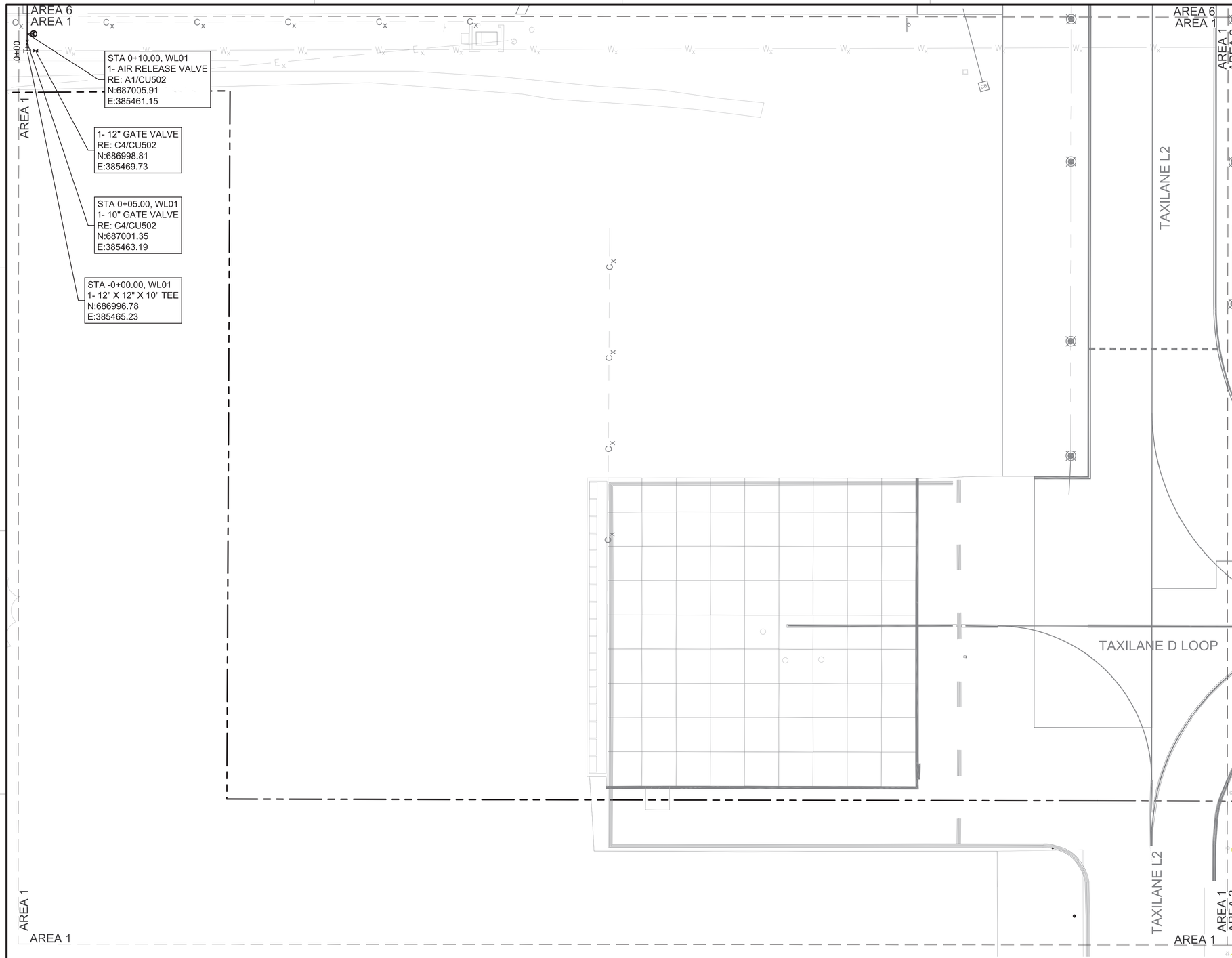

A1 UTILITY PLAN - AREA 1
SCALE: 1" = 30'

GENERAL NOTES

A	REFER TO SHEET CU601 FOR STRUCTURE TABLES
B	REFER TO SHEET ES101 - ES104 FOR SITE LIGHTING INFORMATION.
C	HORIZONTAL BENDS AND TEES REQUIRE THRUST BLOCKS

KEYNOTES

LEGEND

- LIMITS OF DISTURBANCE
- F — FIRE LINE
- C_x — EXISTING UNDERGROUND COMM.
- W_x — EXISTING WATERLINE
- GATE VALVE, RE: C4/CU502
- TEE
- CB — CATCH BASIN, RE: A3/CG503
- EXISTING ELECTRICAL MANHOLE

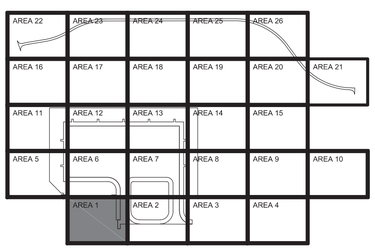

AREA 1
KEY PLAN

GRAPHIC SCALE
0 15' 30' 60'
SCALE: 1"=30'

NORTH ARROW
TRUE N

NAVFAC

STATE OF TEXAS
JENNIFER M. HAYNES
90167
LICENSED
PROFESSIONAL ENGINEER
1/20/2026
TEXAS REGISTERED ENGINEERING FIRM F-3966 SEAL

Jacobs / BURNS McDONNELL
JACOBS/B&M, A JOINT VENTURE
1100 NORTH GLEBE ROAD
SUITE 500
ARLINGTON, VA 22201
A/E Contract No. N62742-20-D-0002
A/E Task Order No. N6274221F0315
JCG NO. 0343603
A/E INFO

APPROVED
FOR COMMANDER NAVFAC DATE 02/02/2026

ACTIVITY
AFIMSC APPROVAL PER NAVFAC SAT-TO CHECKLIST

SATISFACTORY TO DATE 31 DEC 2025

DES:	JMH	DRW: SMC	REV: ATM
PM/DM			KKK
BRANCH MANAGER			SMK
CHIEF ENG/ARCH			SMK
FIRE PROTECTION			RO

DEPARTMENT OF THE NAVY
NAVAL FACILITIES ENGINEERING SYSTEMS COMMAND
NAVFAC PACIFIC
NAVAL FACILITIES ENGINEERING SYSTEMS COMMAND – PACIFIC
JOINT REGION MARIANAS (JRM)
ANDERSEN AIR FORCE BASE
GUAM
FY24 AJJY183012 (P-012),
PDI: NORTH AIRCRAFT PARKING RAMP
UTILITY PLAN - AREA 1

SCALE: AS SHOWN
EPROJECTS NO.: 1665555
CONSTR CONTROL NO.
NAVFAC DRAWING NO. 17361864
SHEET 241 OF 377
CU102

REDESIGN FINAL SUBMITTAL

IF SHEET IS LESS THAN 22" X 34" REDUCED PRINT. USE GRAPHIC SCALES

FILE NAME: U:\BLDG\NAVFAC Pacific\D3430603 – P-012 North Aircraft Parking Ramp\700 Working Documents\740 Sheets\740.01 Civil\P012_1665555_CU102.dwg
LAYOUT NAME: CU102 UTILITY PLAN – AREA 1
PLOTTED: 01/13/2026 9:32am
USER: CamerpS

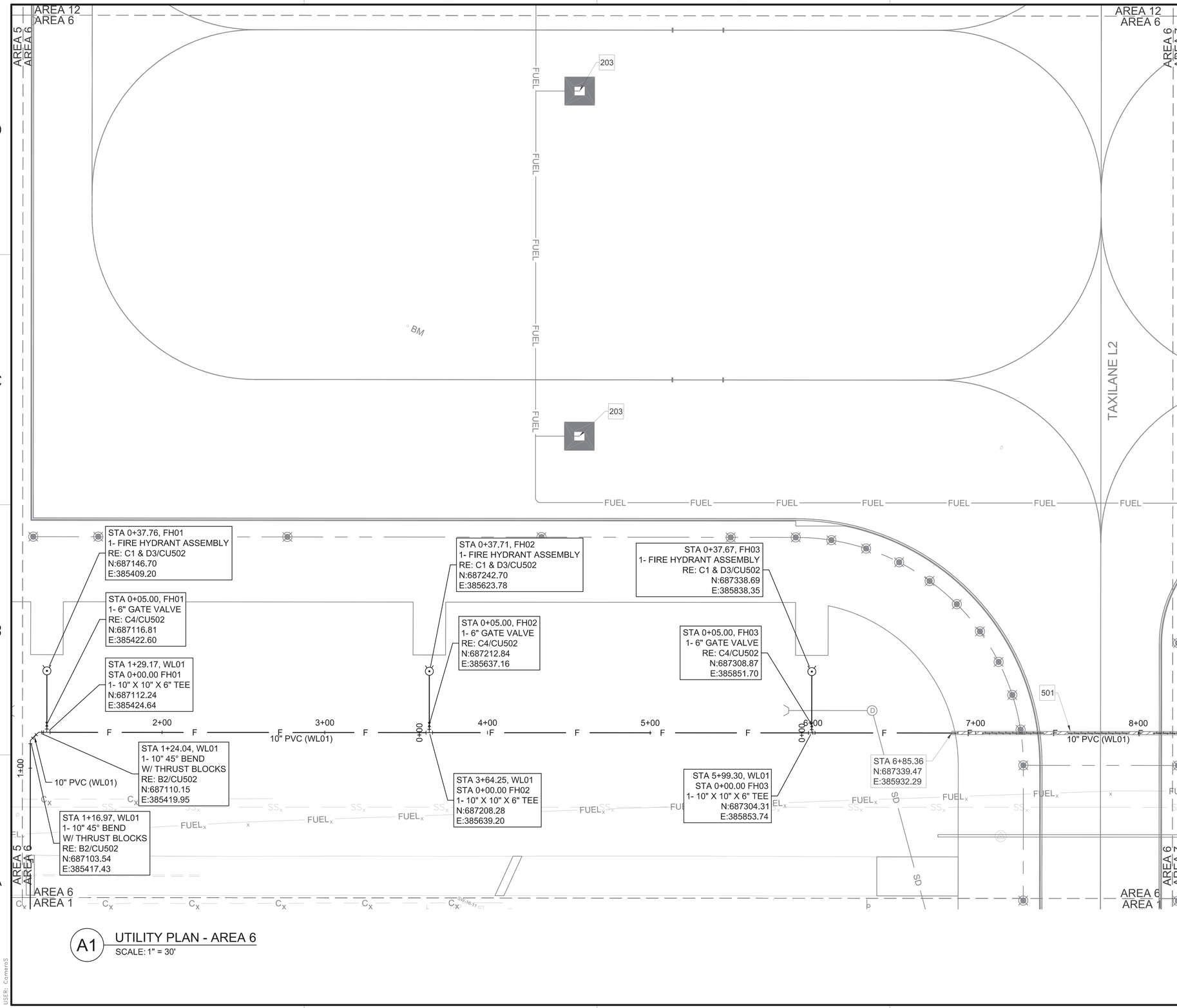

A1 UTILITY PLAN - AREA 6
SCALE: 1" = 30'

GENERAL NOTES

A	REFER TO SHEET CU601 FOR STRUCTURE TABLES
B	REFER TO SHEET ES101 - ES104 FOR SITE LIGHTING INFORMATION.
C	REFER TO SHEET CF101 FOR HYDRANT PIT NUMBERING
D	REFER TO SHEET CU120 FOR FUEL SYSTEM INFORMATION
E	HORIZONTAL BENDS AND TEES REQUIRE THRUST BLOCKS

KEYNOTES

203	FUEL HYDRANT PIT, RE: C3/CF501
501	CONCRETE ENCASED PIPE, RE: B1/CU502

LEGEND

F	FIRE LINE
FUEL	FUEL LINE
$FUEL_x$	EXISTING UNDERGROUND FUEL LINE
SS_x	EXISTING SANITARY SEWER
C_x	EXISTING UNDERGROUND COMM.
SD	STORM DRAIN
	FUEL HYDRANT PIT, RE: C3/CF501
	TAXILANE LIGHTS
	HIGH MAST LIGHT POLE, RE: ES505
	HEADWALL, RE: A2/CG501
D	STORM DRAIN MANHOLE, RE: C3/CG502

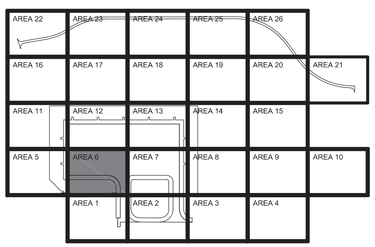

AREA 6
KEY PLAN

GRAPHIC SCALE
0 15' 30' 60'
SCALE: 1"=30'

NORTH ARROW
TRUE N

NAVFAC

STATE OF TEXAS
JENNIFER M. HAYNES
90167
LICENSED
PROFESSIONAL ENGINEER
1/20/2026
TEXAS REGISTERED ENGINEERING FIRM F-3966 SEAL

Jacobs / BURNS McDONNELL
JACOBS/B&M, A JOINT VENTURE
1100 NORTH GLEBE ROAD
SUITE 500
ARLINGTON, VA 22201
A/E Contract No. N62742-20-D-0002
A/E Task Order No. N62742-21F0315
JCG NO. 0343603
A/E INFO

APPROVED
FOR COMMANDER NAVFAC DATE 02/02/2026

ACTIVITY
AFIMSC APPROVAL PER NAVFAC SAT-TO CHECKLIST

SATISFACTORY TO DATE 31 DEC 2025

DES:	JMH	DRW: SMC	REV: ATM
PM/DM			KKK
BRANCH MANAGER			SMK
CHIEF ENG/ARCH			SMK
FIRE PROTECTION			RO

DEPARTMENT OF THE NAVY
NAVFAC PACIFIC
NAVAL FACILITIES ENGINEERING SYSTEMS COMMAND
NAVAL FACILITIES ENGINEERING SYSTEMS COMMAND – PACIFIC
JOINT REGION MARIANAS (JRM)
ANDERSEN AIR FORCE BASE
GUAM

FY24 AJJY183012 (P-012),
PDI: NORTH AIRCRAFT PARKING RAMP
UTILITY PLAN - AREA 6

SCALE: AS SHOWN
EPROJECTS NO.: 1665555
CONSTR CONTROL NO.
NAVFAC DRAWING NO. 17361865
SHEET 242 OF 377
CU103

REDESIGN FINAL SUBMITTAL

IF SHEET IS LESS THAN 22" X 34" REDUCED PRINT. USE GRAPHIC SCALES

FILE NAME: U:\BLDG\NAVFAC Pacific\D3430603 – P-012 North Aircraft Parking Ramp\700 Working Documents\740 Sheets\740.01 Civil\P012_1665555_CU103.dwg
LAYOUT NAME: CU103 UTILITY PLAN – AREA 6
PLOTTED: 01/13/2026 9:34am
USER: CamaroS

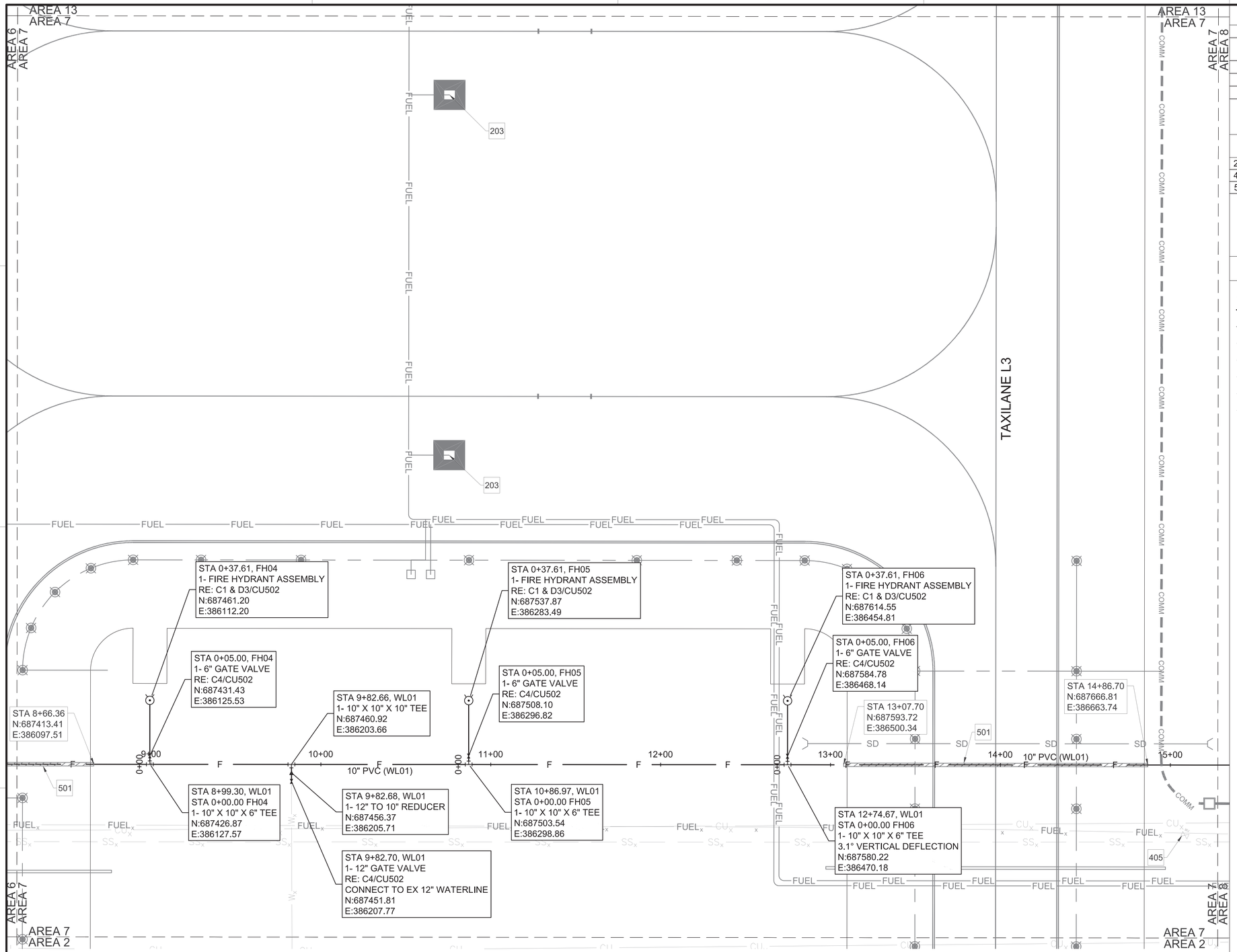

A1 UTILITY PLAN - AREA 7
SCALE: 1" = 30'

GENERAL NOTES

A	REFER TO SHEET CU601 FOR STRUCTURE TABLES
B	REFER TO SHEET ES101 - ES104 FOR SITE LIGHTING INFORMATION.
C	REFER TO SHEET CF101 FOR HYDRANT PIT NUMBERING
D	REFER TO SHEET CU120 FOR FUEL SYSTEM INFORMATION
E	HORIZONTAL BENDS AND TEES REQUIRE THRUST BLOCKS

KEYNOTES

203	FUEL HYDRANT PIT, RE: C3/CF501
405	ADJUST WATER VALVE TO GRADE
501	CONCRETE ENCASED PIPE, RE: B1/CU502

LEGEND

COMM	UNDERGROUND COMM.
F	FIRE LINE
FUEL	FUEL LINE
SD	STORM DRAIN
$FUEL_x$	EXISTING UNDERGROUND FUEL LINE
SS_x	EXISTING SANITARY SEWER
W_x	EXISTING WATER LINE
C_x	EXISTING UNDERGROUND COMM.
	GATE VALVE, RE: C4/CU502
	FUEL HYDRANT PIT, RE: C3/CF501
	ELECTRICAL / COMM MANHOLE
	TAXILANE LIGHTS
	HEADWALL, RE: A2/CG501
	BEND RE: B2/CU502

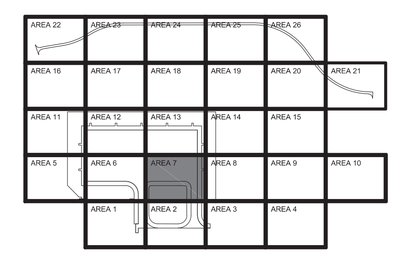

AREA 7
KEY PLAN

GRAPHIC SCALE
0 15' 30' 60'
SCALE: 1"=30'

NORTH ARROW
TRUE N

NAVFAC

STATE OF TEXAS
JENNIFER M. HAYNES
90167
LICENSED
PROFESSIONAL ENGINEER
1/20/2026
TEXAS REGISTERED ENGINEERING FIRM F-3966 SEAL

Jacobs / BURNS McDONNELL
JACOBS/B&M, A JOINT VENTURE
1100 NORTH GLEBE ROAD
SUITE 500
ARLINGTON, VA 22201
A/E Contract No. N62742-20-D-0002
A/E Task Order No. N6274221F0315
JEG NO. D3430603
A/E INFO

APPROVED
FOR COMMANDER NAVFAC DATE 02/02/2026

ACTIVITY
AFI/MSC APPROVAL PER NAVFAC SAT-TO CHECKLIST

SATISFACTORY TO DATE	31 DEC 2025
DES: JMH DRW: SMC REV:	ATM
PM/DM	KKK
BRANCH MANAGER	SMK
CHIEF ENG/ARCH	SMK
FIRE PROTECTION	RO

DEPARTMENT OF THE NAVY
NAVFAC PACIFIC
NAVAL FACILITIES ENGINEERING SYSTEMS COMMAND
NAVAL FACILITIES ENGINEERING SYSTEMS COMMAND – PACIFIC
JOINT REGION MARIANAS (JRM)
ANDERSEN AIR FORCE BASE
GUAM

FY24 AJJY183012 (P-012)
PDI: NORTH AIRCRAFT PARKING RAMP
UTILITY PLAN - AREA 7

SCALE:	AS SHOWN
EPROJECTS NO.:	1665555
CONSTR CONTROL NO.	
NAVFAC DRAWING NO.	17361866
SHEET	243 OF 377

CU104

REDESIGN FINAL SUBMITTAL

IF SHEET IS LESS THAN 22" X 34" REDUCED PRINT. USE GRAPHIC SCALES

FILE NAME: U:\BLDG\NAVFAC Pacific\D3430603 – P-012 North Aircraft Parking Ramp\700 Working Documents\740 Sheets\740.01 Civil\P012_1665555_CU104.dwg
LAYOUT NAME: CU103 UTILITY PLAN – AREA 7
PLOTTED: 01/13/2026 9:37am
USER: CamarcS

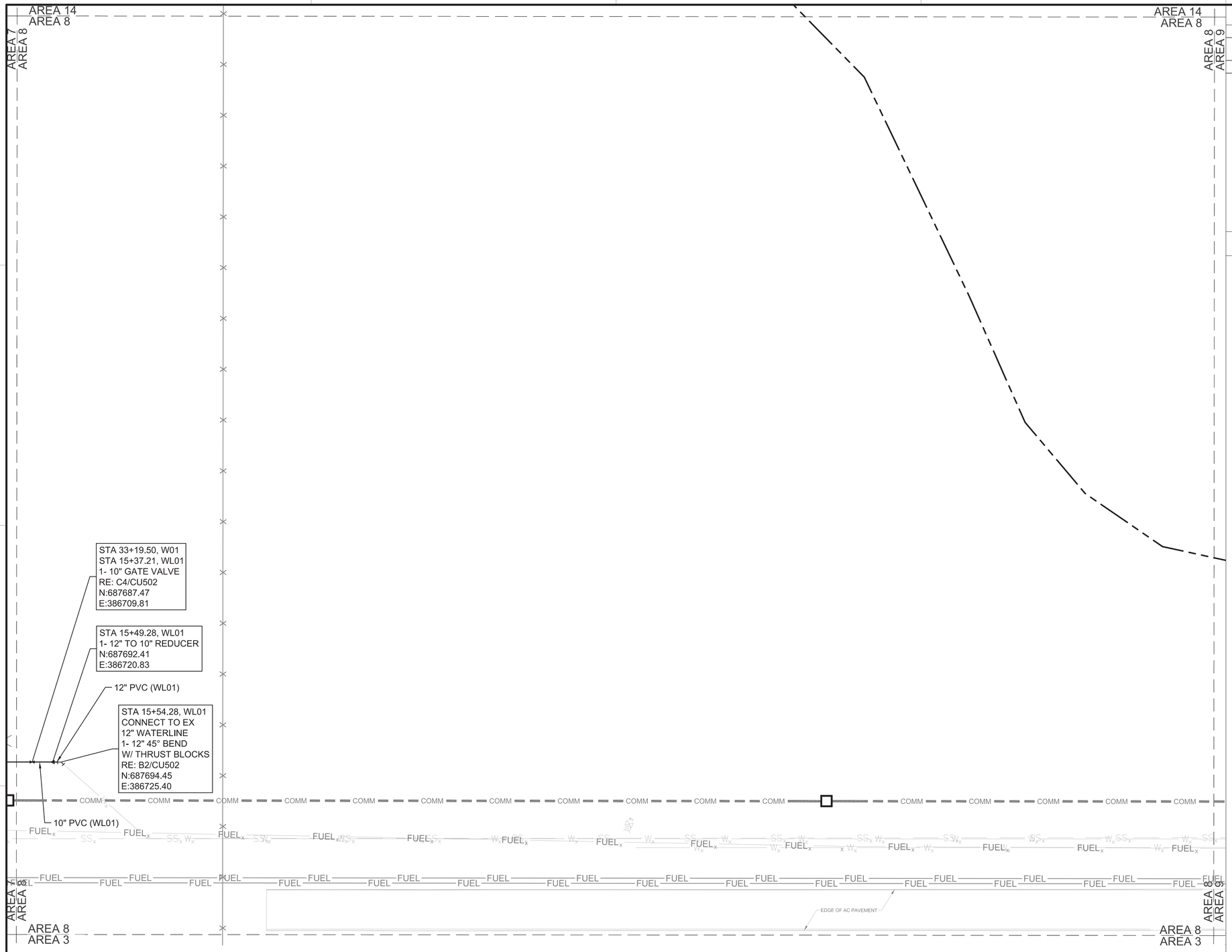

A1 UTILITY PLAN - AREA 8
SCALE: 1" = 30'

GENERAL NOTES

A	REFER TO SHEET CU601 FOR STRUCTURE TABLES
B	REFER TO SHEET ES101 - ES104 FOR SITE LIGHTING INFORMATION.
C	HORIZONTAL BENDS AND TEES REQUIRE THRUST BLOCKS

LEGEND

- LIMITS OF DISTURBANCE
- F — FIRE LINE
- COMM — UNDERGROUND COMM.
- SS_x — EXISTING SANITARY SEWER
- W_x — EXISTING WATERLINE
- $FUEL_x$ — EXISTING UNDERGROUND FUEL LINE
- X — 7' HIGH SECURITY FENCE, RE: C1/CS505
- FIRE HYDRANT, C1/CU502
- GATE VALVE, RE: C4/CU502
- TEE
- BEND RE: B2/CU502

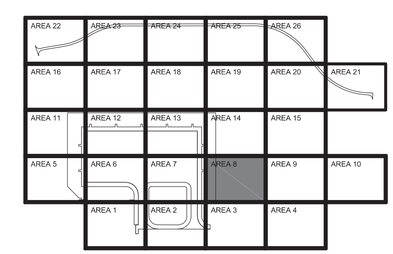

AREA 8
KEY PLAN

GRAPHIC SCALE
0 15' 30' 60'
SCALE: 1"=30'

NORTH ARROW
TRUE N

NAVFAC

STATE OF TEXAS
JENNIFER M. HAYNES
90167
LICENSED
PROFESSIONAL ENGINEER
1/20/2026
TEXAS REGISTERED ENGINEERING FIRM F-3966 SEAL

Jacobs / BURNS McDONNELL
JACOBS/B&M, A JOINT VENTURE
1100 NORTH GLEBE ROAD
SUITE 500
ARLINGTON, VA 22201
A/E Contract No. N62742-20-D-0002
A/E Task Order No. N6274221F0315
JCG NO. 0343603
A/E INFO

APPROVED
FOR COMMANDER NAVFAC DATE 02/02/2026

ACTIVITY
AFIMSC APPROVAL PER NAVFAC SAT-TO CHECKLIST

SATISFACTORY TO DATE 31 DEC 2025

DES:	JMH	DRW: SMC	REV: ATM
PM/DM			KKK
BRANCH MANAGER			SMK
CHIEF ENG/ARCH			SMK
FIRE PROTECTION			RO

DEPARTMENT OF THE NAVY
NAVFAC PACIFIC
NAVAL FACILITIES ENGINEERING SYSTEMS COMMAND
NAVAL FACILITIES ENGINEERING SYSTEMS COMMAND – PACIFIC
JOINT REGION MARIANAS (JRM)
ANDERSEN AIR FORCE BASE
GUAM

FY24 AJJY183012 (P-012),
PDI: NORTH AIRCRAFT PARKING RAMP

UTILITY PLAN - AREA 8

SCALE: AS SHOWN
EPROJECTS NO.: 1665555
CONSTR CONTROL NO.
NAVFAC DRAWING NO. 17361867
SHEET 244 OF 377
CU105

REDESIGN FINAL SUBMITTAL

IF SHEET IS LESS THAN 22" X 34" REDUCED PRINT. USE GRAPHIC SCALES

FILE NAME: U:\BLDG\NAVFAC Pacific\D3430603 – P-012 North Aircraft Parking Ramp\700 Working Documents\740 Sheets\740.01 Civil\P012_1665555_CU105.dwg
LAYOUT NAME: CU104 UTILITY PLAN – AREA 8
PLOTTED: 01/13/2026 9:41am
USER: CamarcS

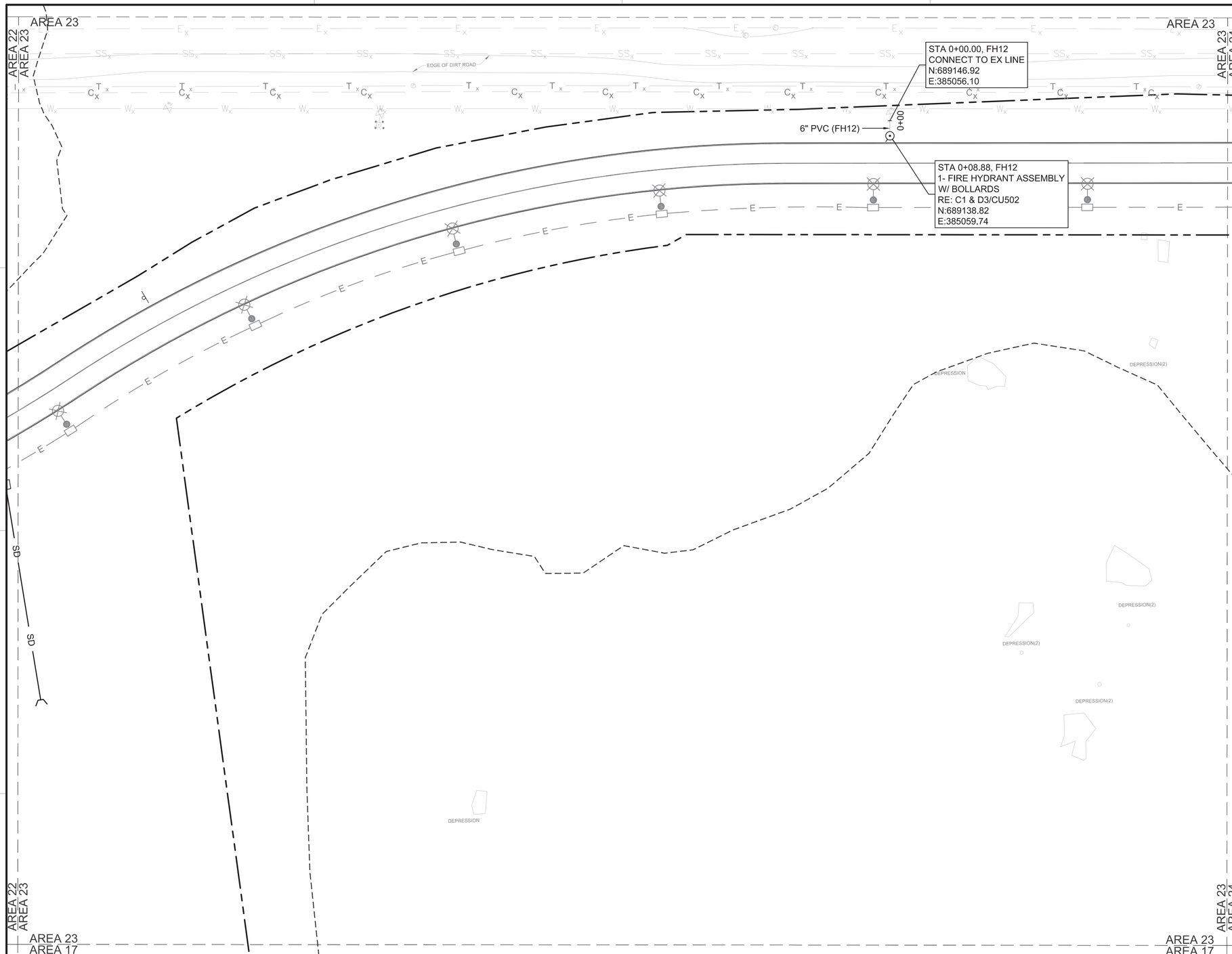

A1 UTILITY PLAN - AREA 23
SCALE: 1" = 30'

GENERAL NOTES

A	REFER TO SHEET CU601 FOR STRUCTURE TABLES
B	REFER TO SHEET ES101 - ES104 FOR SITE LIGHTING INFORMATION.
C	HORIZONTAL BENDS AND TEES REQUIRE THRUST BLOCKS

LEGEND

- LIMITS OF DISTURBANCE
- F — WATERLINE
- EXISTING SINKHOLE
- E — UNDERGROUND ELECTRIC
- T_x — EXISTING PHONE LINE
- W_x — EXISTING WATERLINE
- SS_x — EXISTING SANITARY SEWER
- E_x — EXISTING UNDERGROUND ELECTRIC
- C_x — EXISTING UNDERGROUND COMM.
- FIRE HYDRANT, RE: C1/CU502
- GATE VALVE, RE: C4/CU502
- EXISTING FIRE HYDRANT
- EXISTING COMMUNICATION MANHOLE
- EXISTING ELECTRICAL MANHOLE
- EXISTING WATER VALVE

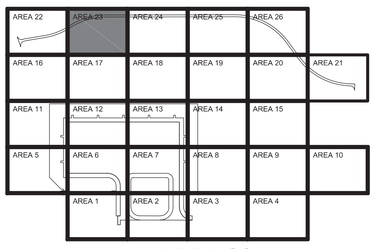

AREA 23
KEY PLAN

GRAPHIC SCALE
0 15' 30' 60'
SCALE: 1"=30'

NORTH ARROW
TRUE N

IF SHEET IS LESS THAN 22" X 34" REDUCED PRINT. USE GRAPHIC SCALES

NAVFAC

STATE OF TEXAS
JENNIFER M. HAYNES
90167
LICENSED
PROFESSIONAL ENGINEER
1/20/2026
TEXAS REGISTERED ENGINEERING FIRM F-3966 SEAL

Jacobs / BURNS & McDONNELL
JACOBS/B&M, A JOINT VENTURE
1100 NORTH GLEBE ROAD
SUITE 500
ARLINGTON, VA 22201
A/E Contract No. N62742-20-D-0002
A/E Task Order No. N6274221F0315
JCG NO. 0343663
A/E INFO

APPROVED
FOR COMMANDER NAVFAC DATE 02/02/2026

ACTIVITY
AFIMSC APPROVAL PER NAVFAC SAT-TO CHECKLIST

SATISFACTORY TO DATE 31 DEC 2025

DES: JMH	DRW: SMC	REV: ATM
PM/DM		KKK
BRANCH MANAGER		SMK
CHIEF ENG/ARCH		SMK
FIRE PROTECTION		RO

DEPARTMENT OF THE NAVY
NAVAL FACILITIES ENGINEERING SYSTEMS COMMAND
NAVFAC PACIFIC
NAVAL FACILITIES ENGINEERING SYSTEMS COMMAND – PACIFIC
JOINT REGION MARIANAS (JRM)
ANDERSEN AIR FORCE BASE
GUAM

FY24 AUJY183012 (P-012),
PDI: NORTH AIRCRAFT PARKING RAMP

UTILITY PLAN - AREA 23

SCALE: AS SHOWN
EPROJECTS NO.: 1665555
CONSTR CONTROL NO.
NAVFAC DRAWING NO. 17361868
SHEET 245 OF 377

CU106

REDESIGN FINAL SUBMITTAL

FILE NAME: U:\BLDG\NAVFAC Pacific\D3430603 – P-012 North Aircraft Parking Ramp\700 Working Documents\740 Sheets\740.01 Civil\P012_1665555_CU106.dwg
LAYOUT NAME: UTILITY PLAN – AREA 23
PLOTTED: 01/13/2026 9:44am
USER: Camaros

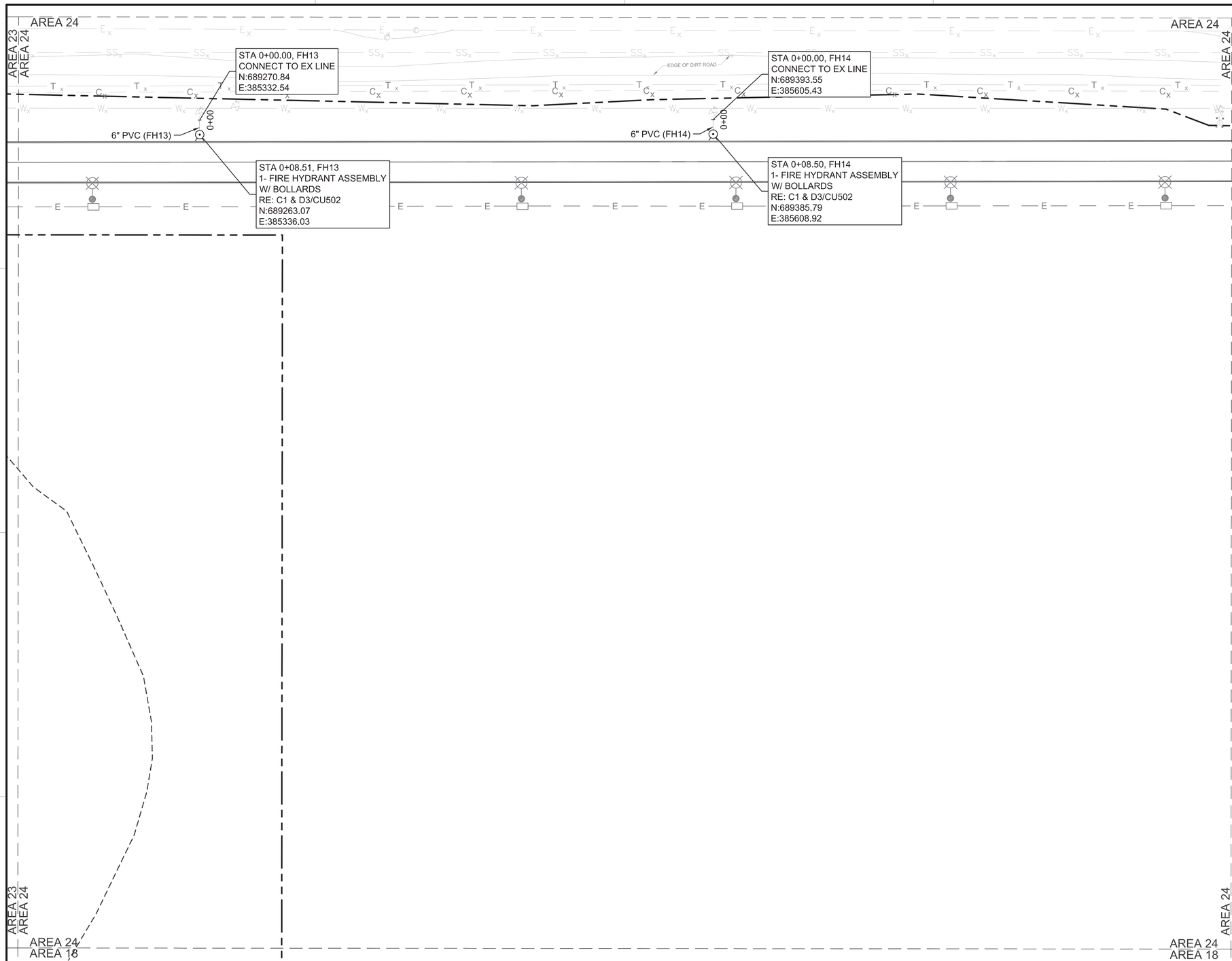

A1 UTILITY PLAN - AREA 24
SCALE: 1" = 30'

GENERAL NOTES

A	REFER TO SHEET CU601 FOR STRUCTURE TABLES
B	REFER TO SHEET ES101 - ES104 FOR SITE LIGHTING INFORMATION.
C	HORIZONTAL BENDS AND TEES REQUIRE THRUST BLOCKS

LEGEND

	LIMITS OF DISTURBANCE
F	WATERLINE
E	UNDERGROUND ELECTRIC
T_x	EXISTING PHONE LINE
W_x	EXISTING WATERLINE
SS_x	EXISTING SANITARY SEWER
E_x	EXISTING UNDERGROUND ELECTRIC
C_x	EXISTING UNDERGROUND COMM.
	FIRE HYDRANT, RE: C1/CU502
	GATE VALVE, RE: C4/CU502
	EXISTING COMMUNICATION MANHOLE
	EXISTING ELECTRICAL MANHOLE
	EXISTING WATER VALVE

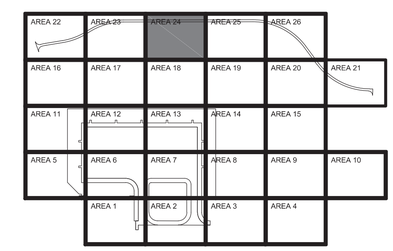

AREA 24
KEY PLAN

GRAPHIC SCALE
0 15' 30' 60'
SCALE: 1"=30'

NORTH ARROW
TRUE N

NAVFAC

STATE OF TEXAS
JENNIFER M. HAYNES
90167
LICENSED
PROFESSIONAL ENGINEER
1/20/2026
TEXAS REGISTERED ENGINEERING FIRM F-3966 SEAL

Jacobs / BURNS McDONNELL
JACOBS/B&M, A JOINT VENTURE
1100 NORTH GLEBE ROAD
SUITE 500
ARLINGTON, VA 22201
A/E Contract No. N62742-20-D-0002
A/E Task Order No. N6274221F0315
JCG NO. 0343603
A/E INFO

APPROVED
FOR COMMANDER NAVFAC DATE 02/02/2026

ACTIVITY
AFIMSC APPROVAL PER NAVFAC SAT-TO CHECKLIST
SATISFACTORY TO DATE 31 DEC 2025

DES:	JMH	DRW:	SMC	REV:	ATM
PM/DM					KKK
BRANCH MANAGER					SMK
CHIEF ENG/ARCH					SMK
FIRE PROTECTION					RO

DEPARTMENT OF THE NAVY
NAVFAC PACIFIC
NAVAL FACILITIES ENGINEERING SYSTEMS COMMAND
NAVAL FACILITIES ENGINEERING SYSTEMS COMMAND – PACIFIC
JOINT REGION MARIANAS (JRM)
ANDERSEN AIR FORCE BASE
GUAM

FY24 AUY183012 (P-012),
PDI: NORTH AIRCRAFT PARKING RAMP

UTILITY PLAN - AREA 24

SCALE: AS SHOWN
EPROJECTS NO.: 1665555
CONSTR CONTROL NO.
NAVFAC DRAWING NO. 17325949
SHEET 246 OF 377
CU107

REDESIGN FINAL SUBMITTAL

IF SHEET IS LESS THAN 22" X 34" REDUCED PRINT. USE GRAPHIC SCALES

FILE NAME: U:\BLDG\NAVFAC Pacific\D3430603 – P-012 North Aircraft Parking Ramp\700 Working Documents\740 Sheets\740.01 Civil\P012_1665555_CU107.dwg
LAYOUT NAME: UTILITY PLAN – AREA 24
PLOTTED: 01/13/2026 9:48am
USER: CamerosS

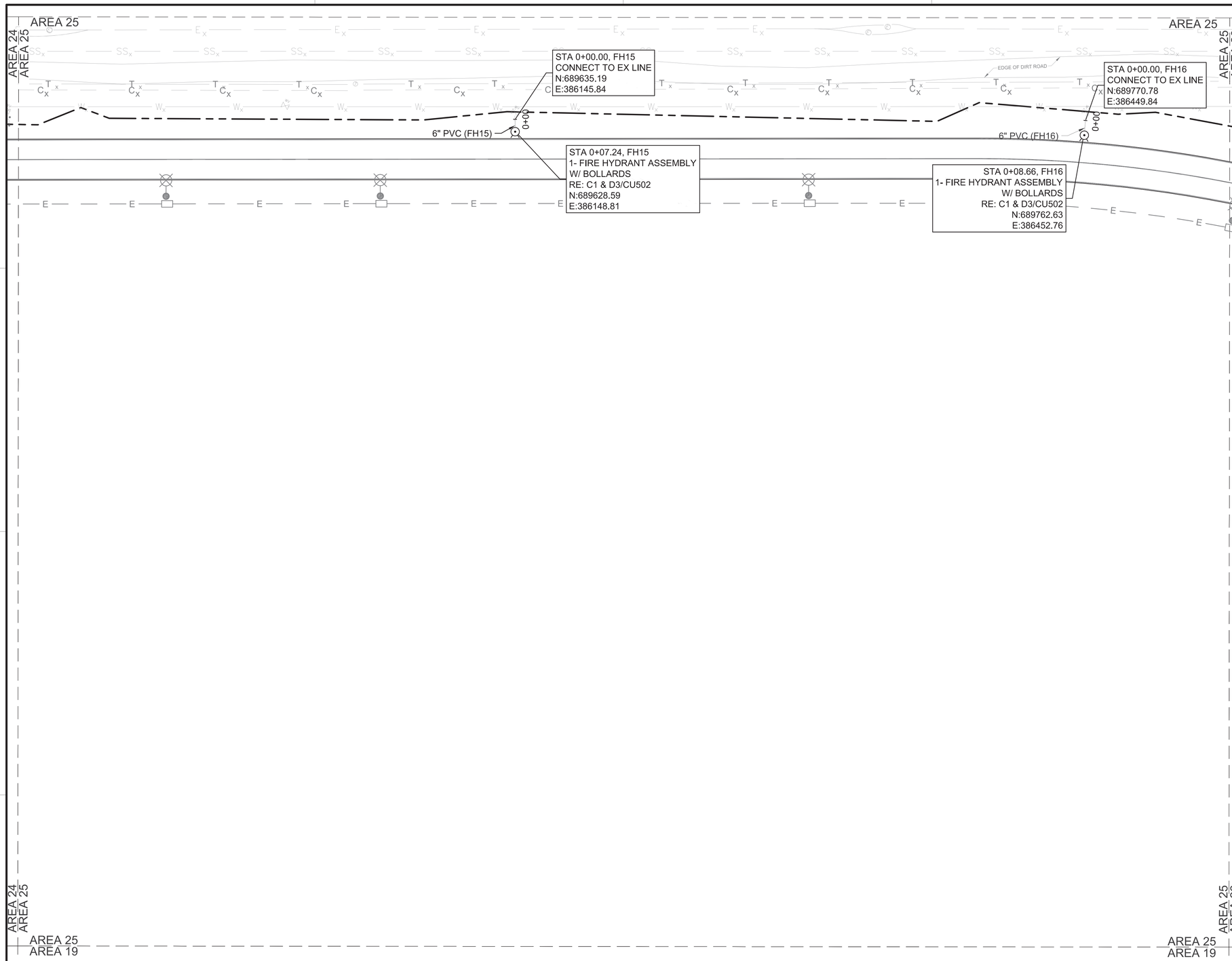

A1 UTILITY PLAN - AREA 25
SCALE: 1" = 30'

GENERAL NOTES

A	REFER TO SHEET CU601 FOR STRUCTURE TABLES
B	REFER TO SHEET ES101 - ES104 FOR SITE LIGHTING INFORMATION.
C	HORIZONTAL BENDS AND TEES REQUIRE THRUST BLOCKS

LEGEND

- LIMITS OF DISTURBANCE
- F — WATERLINE
- E — UNDERGROUND ELECTRIC
- T_x — EXISTING PHONE LINE
- W_x — EXISTING WATERLINE
- SS_x — EXISTING SANITARY SEWER
- E_x — EXISTING UNDERGROUND ELECTRIC
- C_x — EXISTING UNDERGROUND COMM.
- FIRE HYDRANT, RE: C1/CU502
- GATE VALVE, RE: C4/CU502
- EXISTING COMMUNICATION MANHOLE
- EXISTING ELECTRICAL MANHOLE
- EXISTING WATER VALVE

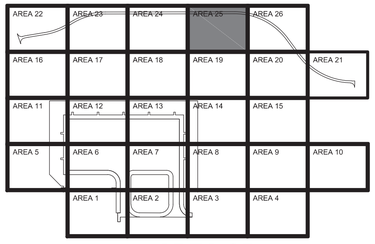

AREA 25
KEY PLAN

GRAPHIC SCALE
0 15' 30' 60'
SCALE: 1"=30'

NORTH ARROW
TRUE N

NAVFAC

STATE OF TEXAS
JENNIFER M. HAYNES
90167
LICENSED
PROFESSIONAL ENGINEER
1/27/2026
TEXAS REGISTERED ENGINEERING FIRM F-3966 SEAL

Jacobs / BURNS McDONNELL
JACOBS/B&M, A JOINT VENTURE
1100 NORTH GLEBE ROAD
SUITE 500
ARLINGTON, VA 22201
A/E Contract No. N62742-20-D-0002
A/E Task Order No. N6274221F0315
JCG NO. 0343603
A/E INFO

APPROVED
FOR COMMANDER NAVFAC DATE 02/02/2026

ACTIVITY
AFIMSC APPROVAL PER NAVFAC SAT-TO CHECKLIST
SATISFACTORY TO DATE 31 DEC 2025

DES:	JMH	DRW:	SMC	REV:	ATM
PM/DM					KKK
BRANCH MANAGER					SMK
CHIEF ENG/ARCH					SMK
FIRE PROTECTION					RO

DEPARTMENT OF THE NAVY
NAVAL FACILITIES ENGINEERING SYSTEMS COMMAND
NAVFAC PACIFIC
ANDERSEN AIR FORCE BASE

NAVAL FACILITIES ENGINEERING SYSTEMS COMMAND
JOINT REGION MARIANAS (JRM)
GUAM

FY24 AUY183012 (P-012),
PDI: NORTH AIRCRAFT PARKING RAMP

UTILITY PLAN - AREA 25

SCALE: AS SHOWN
EPROJECTS NO.: 1665555
CONSTR CONTROL NO.
NAVFAC DRAWING NO. 17361870
SHEET 247 OF 377

CU108

REDESIGN FINAL SUBMITTAL

IF SHEET IS LESS THAN 22" X 34" REDUCED PRINT. USE GRAPHIC SCALES

FILE NAME: U:\BLDG\NAVFAC Pacific\D3430603 - P-012 North Aircraft Parking Ramp\700 Working Documents\740 Sheets\740.01 Civil\P012_1665555_CU108.dwg
LAYOUT NAME: UTILITY PLAN - AREA 25
PLOTTED: 01/27/2026 11:33pm
USER: CamerosS

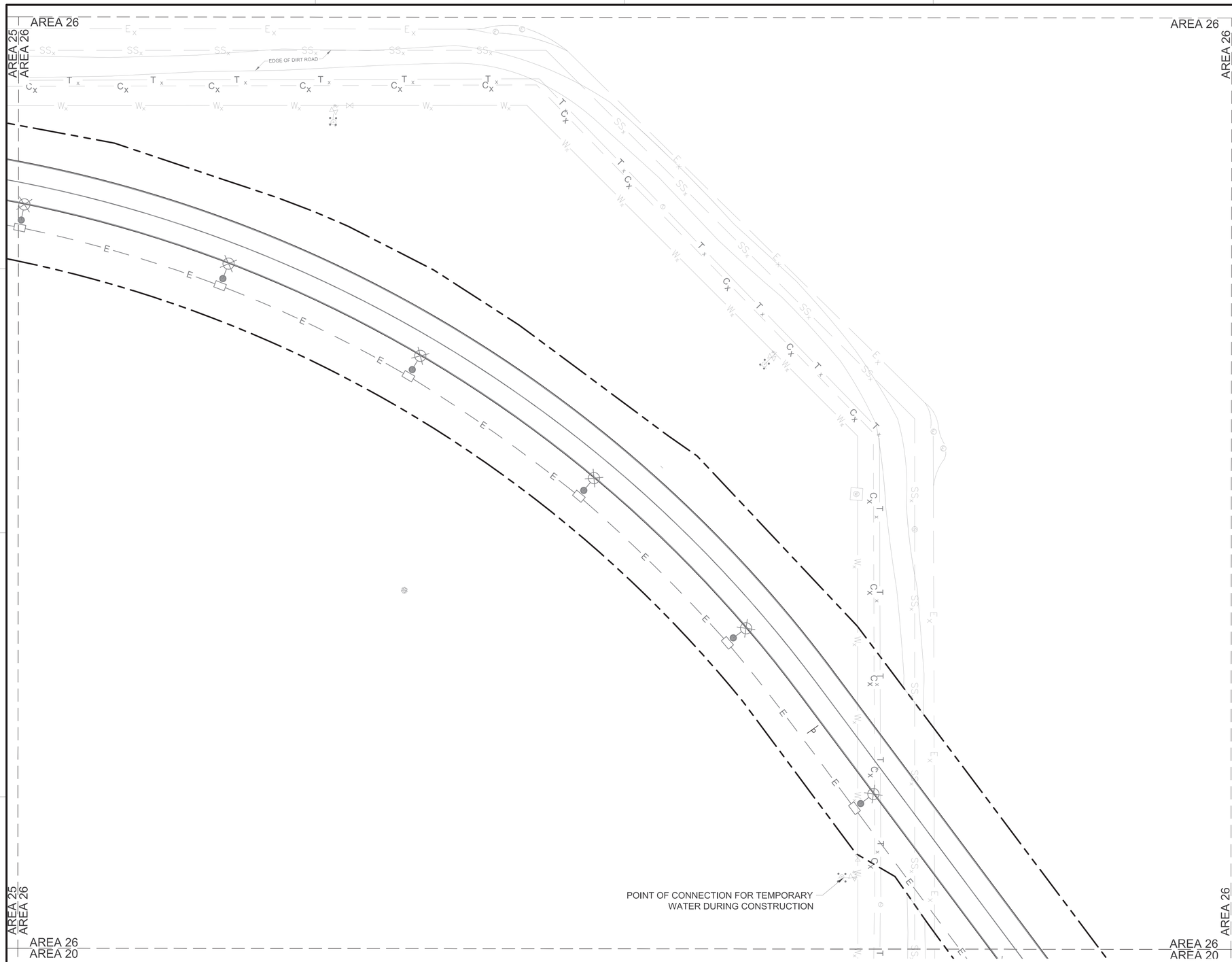

A1 UTILITY PLAN - AREA 26
SCALE: 1" = 30'

GENERAL NOTES

A	REFER TO SHEET CU601 FOR STRUCTURE TABLES
B	REFER TO SHEET ES101 - ES104 FOR SITE LIGHTING INFORMATION.
C	HORIZONTAL BENDS AND TEES REQUIRE THRUST BLOCKS

LEGEND

- LIMITS OF DISTURBANCE
- F — WATERLINE
- E — UNDERGROUND ELECTRIC
- T_x — EXISTING PHONE LINE
- W_x — EXISTING WATERLINE
- SS_x — EXISTING SANITARY SEWER
- E_x — EXISTING UNDERGROUND ELECTRIC
- C_x — EXISTING UNDERGROUND COMM.
- FIRE HYDRANT, RE: C1/CU502
- GATE VALVE, RE: C4/CU502
- EXISTING COMMUNICATION MANHOLE
- EXISTING ELECTRICAL MANHOLE
- EXISTING WATER VALVE
- EXISTING FIRE HYDRANT
- EXISTING WATER METER
- EXISTING SANITARY SEWER MANHOLE

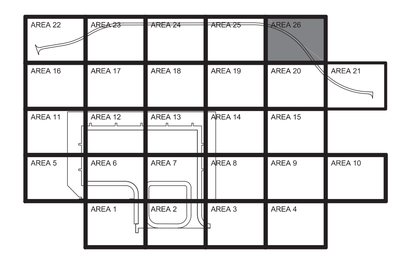

AREA 26
KEY PLAN

GRAPHIC SCALE
0 15' 30' 60'
SCALE: 1"=30'

NORTH ARROW
TRUE N

NAVFAC

STATE OF TEXAS
JENNIFER M. HAYNES
90167
LICENSED
PROFESSIONAL ENGINEER
1/20/2026
TEXAS REGISTERED ENGINEERING FIRM F-3066 SEAL

Jacobs / BURNS McDONNELL
JACOBS/B&M, A JOINT VENTURE
1100 NORTH GLEBE ROAD
SUITE 500
ARLINGTON, VA 22201
A/E Contract No. N62742-20-D-0002
A/E Task Order No. N62742-21F0315
JCG NO. 0343603
A/E INFO

APPROVED
FOR COMMANDER NAVFAC DATE 02/02/2026

ACTIVITY
AFIMSC APPROVAL PER NAVFAC SAT-TO CHECKLIST

SATISFACTORY TO DATE 31 DEC 2025

DES:	JMH	DRW:	SMC	REV:	ATM
PM/DM					KKK
BRANCH MANAGER					SMK
CHIEF ENG/ARCH					SMK
FIRE PROTECTION					RO

DEPARTMENT OF THE NAVY
NAVAL FACILITIES ENGINEERING SYSTEMS COMMAND
NAVFAC PACIFIC
NAVAL FACILITIES ENGINEERING SYSTEMS COMMAND – PACIFIC
JOINT REGION MARIANAS (JRM)
ANDERSEN AIR FORCE BASE
GUAM

FY24 AUY183012 (P-012),
PDI: NORTH AIRCRAFT PARKING RAMP

UTILITY PLAN - AREA 26

SCALE: AS SHOWN
EPROJECTS NO.: 1665555
CONSTR CONTROL NO.
NAVFAC DRAWING NO. 17361871
SHEET 248 OF 377

CU109

REDESIGN FINAL SUBMITTAL

IF SHEET IS LESS THAN 22" X 34"
REDUCED PRINT. USE GRAPHIC SCALES

FILE NAME: U:\BLDG\NAVFAC Pacific\0343603 – P-012 North Aircraft Parking Ramp\700 Working Documents\740 Sheets\740.01 Civil\P012_1665555_CU109.dwg
LAYOUT NAME: UTILITY PLAN – AREA 26
PLOTTED: 01/13/2026 9:53am
USER: Cameron5

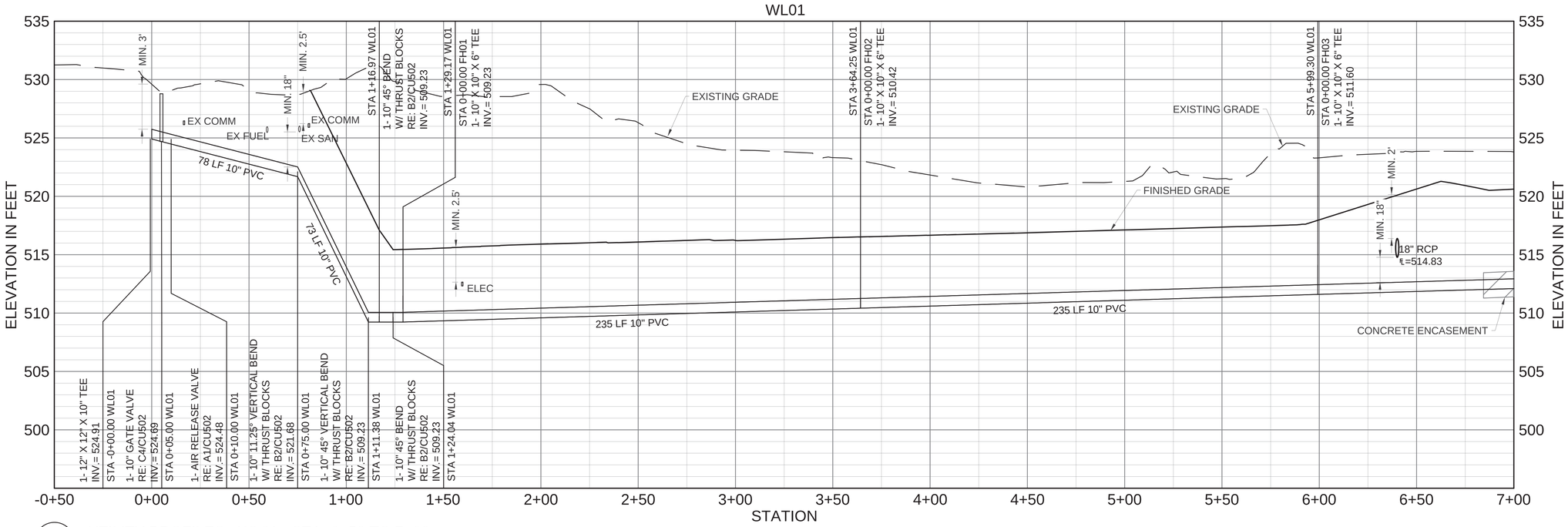

C1 UTILITY PROFILES - WL01 - STA -0+50 TO 7+00

SCALE: HORIZONTAL 1" = 30'
VERTICAL 1" = 5'

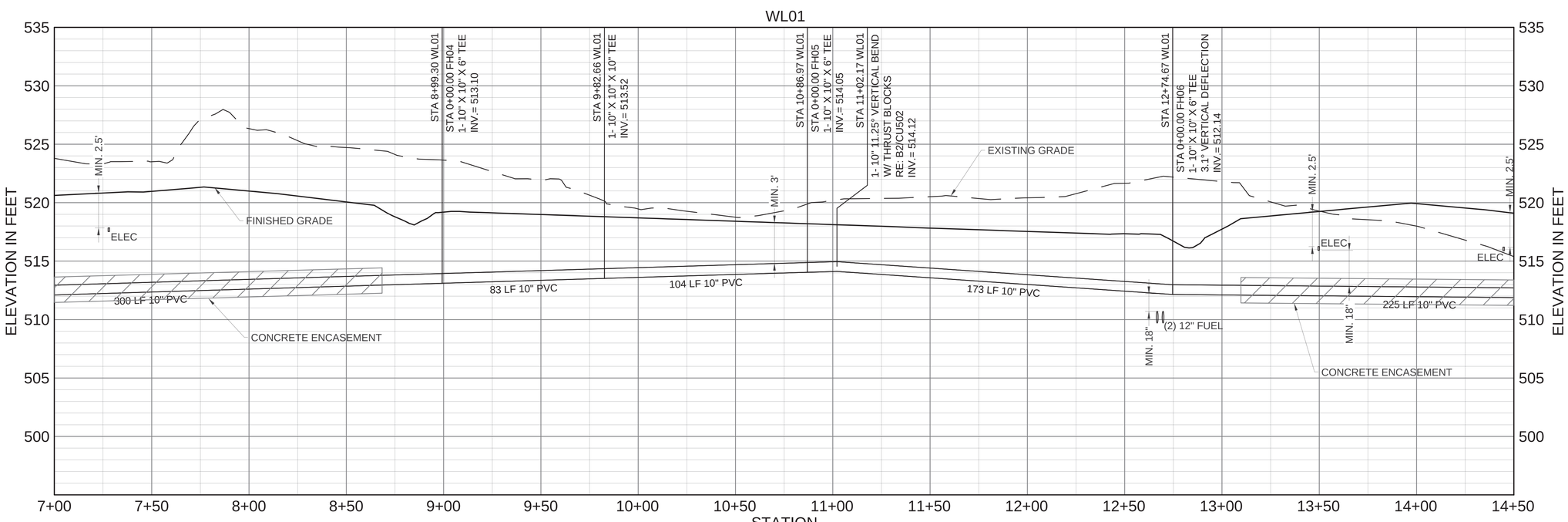

A1 UTILITY PROFILES - WL01 - STA 7+00 TO 14+50

SCALE: HORIZONTAL 1" = 30'
VERTICAL 1" = 5'

VERTICAL SCALE: 1"=5' (0, 2.5', 5', 10')

HORIZONTAL SCALE: 1"=30' (0, 15', 30', 60')

IF SHEET IS LESS THAN 22" X 34"
REDUCED PRINT. USE GRAPHIC SCALES

NAVFAC

STATE OF TEXAS
JENNIFER M. HAYNES
90167
LICENSED
PROFESSIONAL ENGINEER
1/20/2026
TEXAS REGISTERED ENGINEERING FIRM F-2966 SEAL

Jacobs / BURNS MCDONNELL
JACOBS/B&M, A JOINT VENTURE
1100 NORTH GLEBE ROAD
SUITE 500
ARLINGTON, VA 22201

A/E Contract No. N62742-20-D-0002
A/E Task Order No. N6274221F0315
JCG NO. 03430603 A/E INFO

APPROVED
FOR COMMANDER NAVFAC DATE 02/02/2026

ACTIVITY
AFIMSC APPROVAL PER NAVFAC SAT-TO CHECKLIST

SATISFACTORY TO DATE 31 DEC 2025

DES: JMH	DRW: SMC	REV: ATM
PM/DM	KKK
BRANCH MANAGER	SMK
CHIEF ENG/ARCH	SMK
FIRE PROTECTION	RO

DEPARTMENT OF THE NAVY
NAVFAC PACIFIC
NAVAL FACILITIES ENGINEERING SYSTEMS COMMAND
NAVAL FACILITIES ENGINEERING SYSTEMS COMMAND – PACIFIC
JOINT REGION MARIANAS (JRM)
ANDERSEN AIR FORCE BASE
GUAM

FY24 AJJY183012 (P-012),
PDI: NORTH AIRCRAFT PARKING RAMP

UTILITY PROFILES

SCALE: AS SHOWN
EPROJECTS NO.: 1665555
CONSTR CONTROL NO.
NAVFAC DRAWING NO. 17361872
SHEET 249 OF 377

CU201

REDESIGN FINAL SUBMITTAL

FILE NAME: U:\BLDG\NAVFAC Pacific\03430603 – P-012 North Aircraft Parking Ramp\700 Working Documents\740 Sheets\740.01 Civil\P012_1665555_CU201.dwg
LAYOUT NAME: CU102 UTILITY PLAN – AREA 5
PLOTTED: 01/15/2026 4:37pm
USER: CamersS

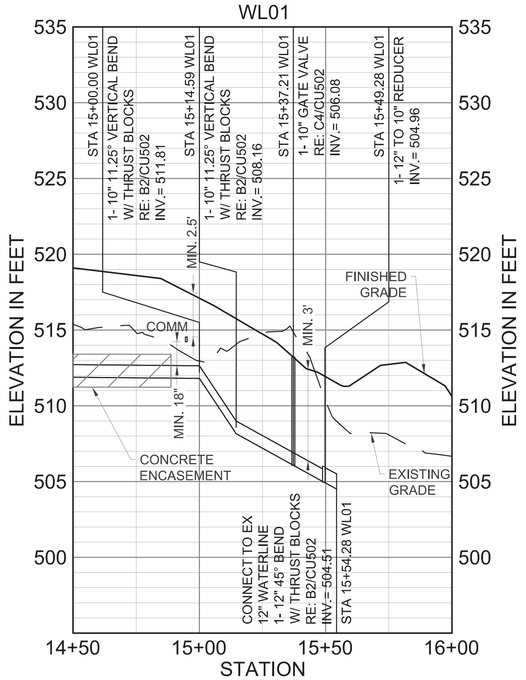

C1 UTILITY PROFILES - WL01 - STA 15+50 TO 23+50
SCALE: HORIZONTAL 1" = 30'
VERTICAL 1" = 5'

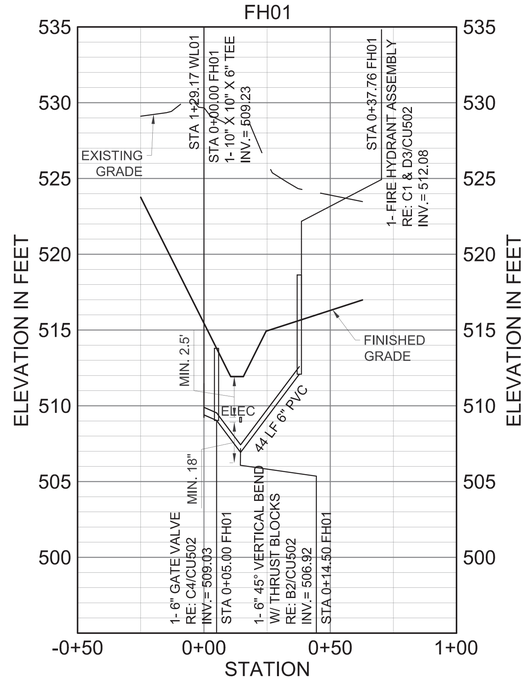

C2 UTILITY PROFILES - FH01
SCALE: HORIZONTAL 1" = 30'
VERTICAL 1" = 5'

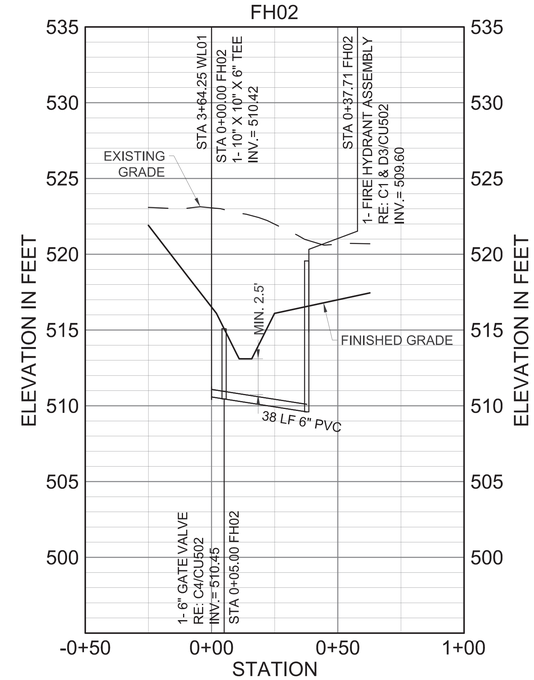

C3 UTILITY PROFILES - FH02
SCALE: HORIZONTAL 1" = 30'

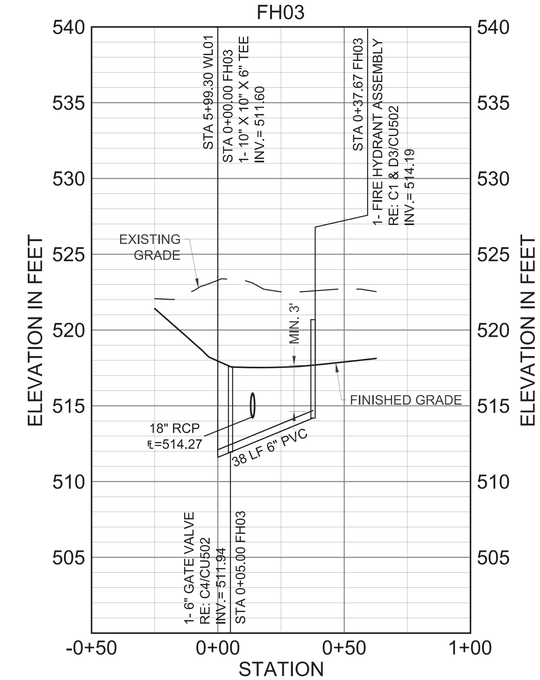

C4 UTILITY PROFILES - FH03
SCALE: HORIZONTAL 1" = 30'
VERTICAL 1" = 5'

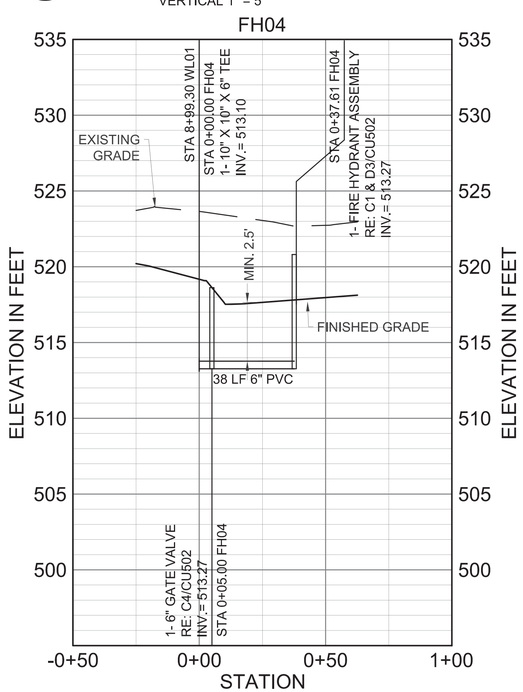

A1 UTILITY PROFILES - FH04
SCALE: HORIZONTAL 1" = 30'
VERTICAL 1" = 5'

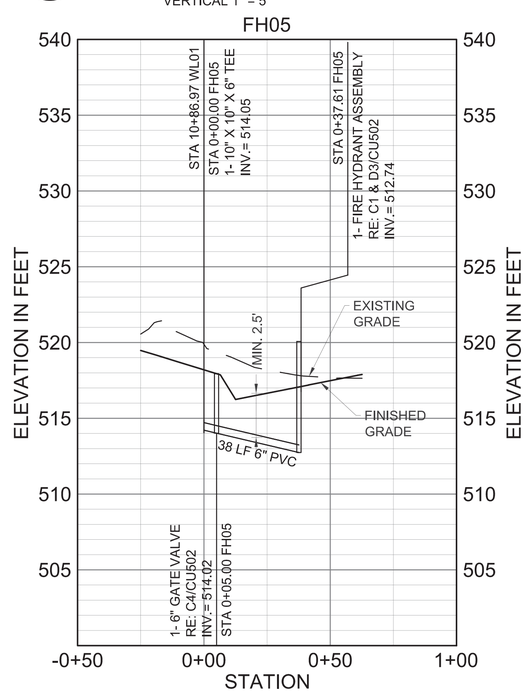

A2 UTILITY PROFILES - FH05
SCALE: HORIZONTAL 1" = 30'
VERTICAL 1" = 5'

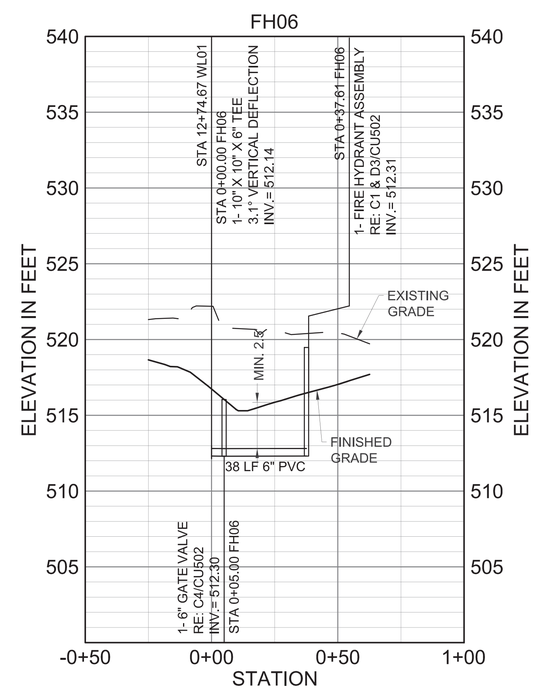

A3 UTILITY PROFILES - FH06
SCALE: HORIZONTAL 1" = 30'
VERTICAL 1" = 5'

0 15' 30' 60'
HORIZONTAL SCALE: 1"=30'

0 2.5' 5' 10'
VERTICAL SCALE: 1"=5'

IF SHEET IS LESS THAN 22" X 34"
REDUCED PRINT. USE GRAPHIC SCALES

NAVFAC

STATE OF TEXAS
JENNIFER M. HAYNES
90167
LICENSED
PROFESSIONAL ENGINEER
1/20/2026
TEXAS REGISTERED ENGINEERING FIRM F-3566 SEAL

Jacobs / BURNS McDONNELL
JACOBS/B&M, A JOINT VENTURE
1100 NORTH GLEBE ROAD
SUITE 500
ARLINGTON, VA 22201

A/E Contract No. N62742-20-D-0002
A/E Task Order No. N62742219 0315
JCG NO. D3430603
A/E INFO

APPROVED
FOR COMMANDER NAVFAC DATE 02/02/2026

ACTIVITY
AFIMSC APPROVAL PER NAVFAC SAT-TO CHECKLIST

SATISFACTORY TO DATE 31 DEC 2025

DES: JMH	DRW: SMC	REV: ATM
PM/OM		KKK
BRANCH MANAGER		SMK
CHIEF ENG/ARCH		SMK
FIRE PROTECTION		RO

DEPARTMENT OF THE NAVY
NAVAL FACILITIES ENGINEERING SYSTEMS COMMAND
NAVFAC PACIFIC
NAVAL FACILITIES ENGINEERING SYSTEMS COMMAND ~ PACIFIC
JOINT REGION MARIANAS (JRM)
ANDERSEN AIR FORCE BASE
GUAM

FY24 AJJY183012 (P-012)
PDI: NORTH AIRCRAFT PARKING RAMP

UTILITY PROFILES

SCALE: AS SHOWN
EPROJECTS NO.: 1665555
CONSTR CONTROL NO.
NAVFAC DRAWING NO. 17361873
SHEET 250 OF 377

CU202

REDESIGN FINAL SUBMITTAL

FILE NAME: U:\BLDG\NAVFAC Pacific\D3430603 - P-012 North Aircraft Parking Ramp\700 Working Documents\740 Sheets\740.01 Civil\P012_1665555_CU202.dwg
LAYOUT NAME: UTILITY PROFILES
PLOTTED: 01/15/2026 4:51pm
USER: CamersS

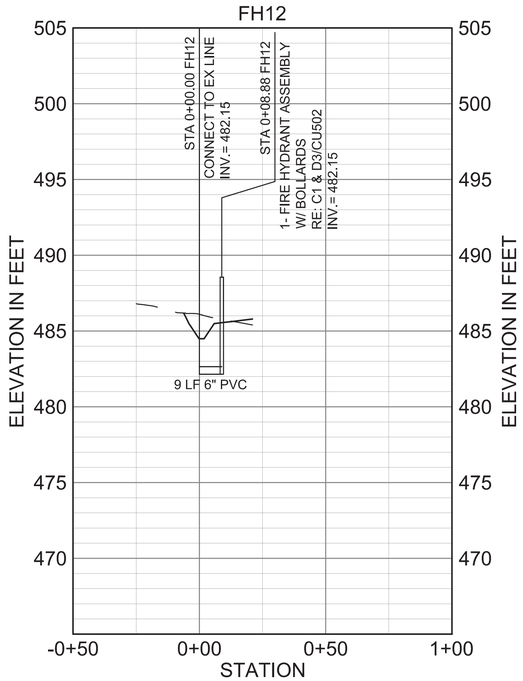

C1 UTILITY PROFILES - FH12
SCALE: HORIZONTAL 1" = 30'
VERTICAL 1" = 5'

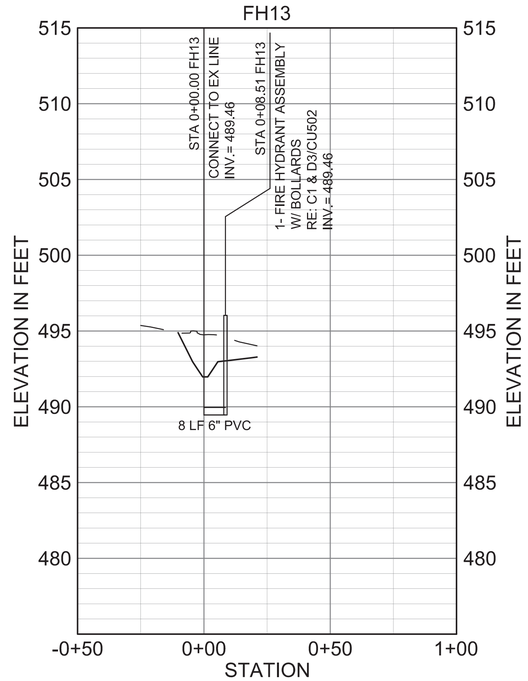

C2 UTILITY PROFILES - FH13
SCALE: HORIZONTAL 1" = 30'
VERTICAL 1" = 5'

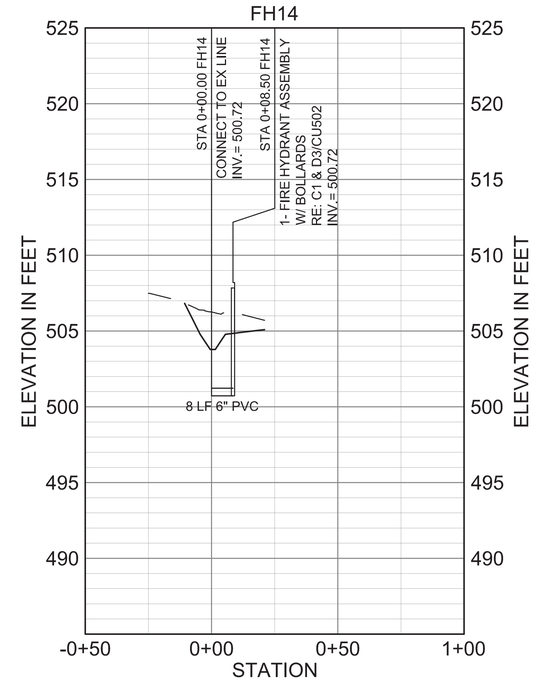

C3 UTILITY PROFILES - FH14
SCALE: HORIZONTAL 1" = 30'

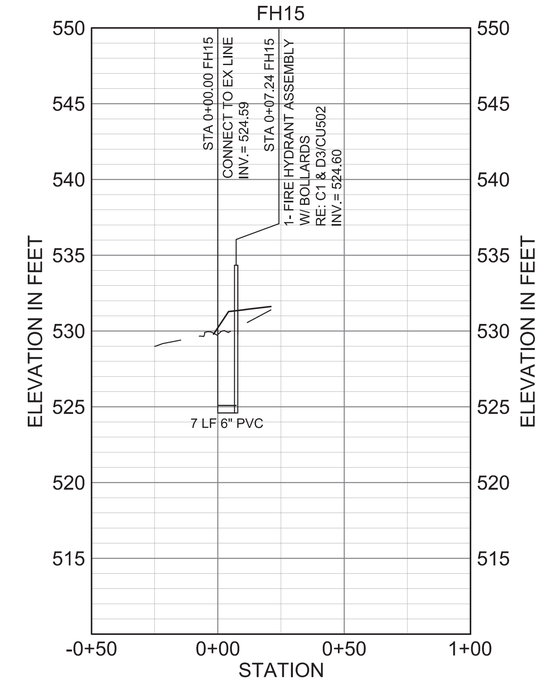

C4 UTILITY PROFILES - FH15
SCALE: HORIZONTAL 1" = 30'
VERTICAL 1" = 5'

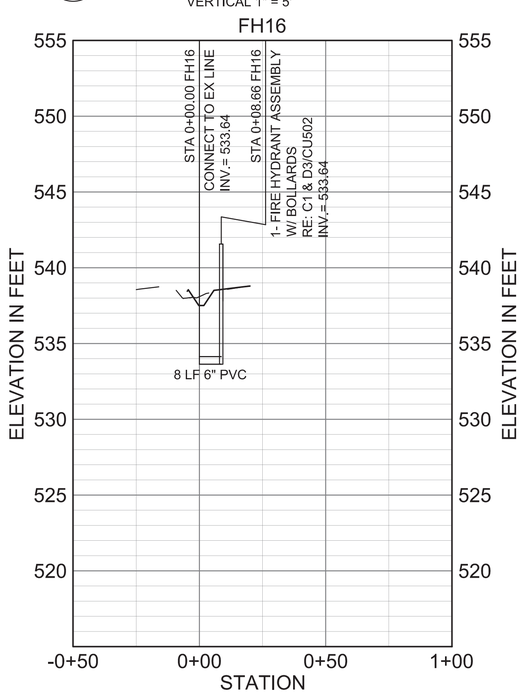

A1 UTILITY PROFILES - FH16
SCALE: HORIZONTAL 1" = 30'
VERTICAL 1" = 5'

0 15' 30' 60'
HORIZONTAL SCALE: 1"=30'

0 2.5' 5' 10'
VERTICAL SCALE: 1"=5'

IF SHEET IS LESS THAN 22" X 34"
REDUCED PRINT. USE GRAPHIC SCALES

NAVFAC

STATE OF TEXAS
JENNIFER M. HAYNES
90167
LICENSED
PROFESSIONAL ENGINEER
1/20/2026
TEXAS REGISTERED ENGINEERING FIRM F-3566 SEAL

Jacobs / BURNS & McDONNELL
JACOBS/B&M, A JOINT VENTURE
1100 NORTH GLEBE ROAD
SUITE 500
ARLINGTON, VA 22201

A/E Contract No. N62742-20-D-0002
A/E Task Order No. N62742219F0315
JCG NO. 03430603 A/E INFO

APPROVED
FOR COMMANDER NAVFAC DATE 02/02/2026

ACTIVITY
AFIMSC APPROVAL PER NAVFAC SAT-TO CHECKLIST

SATISFACTORY TO DATE 31 DEC 2025

DES:	JMH	DRW:	SMC	REV:	ATM
PM/OM					KKK
BRANCH MANAGER					SMK
CHIEF ENG/ARCH					SMK
FIRE PROTECTION					RO

DEPARTMENT OF THE NAVY
NAVFAC PACIFIC
NAVAL FACILITIES ENGINEERING SYSTEMS COMMAND
NAVAL FACILITIES ENGINEERING SYSTEMS COMMAND ~ PACIFIC
JOINT REGION MARIANAS (JRM)
ANDERSEN AIR FORCE BASE
GUAM

FY24 AUJY183012 (P-012),
PDI: NORTH AIRCRAFT PARKING RAMP

UTILITY PROFILES

SCALE: AS SHOWN
EPROJECTS NO.: 1665555
CONSTR CONTROL NO.
NAVFAC DRAWING NO. 17361874
SHEET 251 OF 377

CU203

REDESIGN FINAL SUBMITTAL

FILE NAME: U:\BLDG\NAVFAC Pacific\03430603 - P-012 North Aircraft Parking Ramp\700 Working Documents\740 Sheets\740.01 Civil\P012_1665555_CU203.dwg
LAYOUT NAME: UTILITY PROFILES
PLOTTED: 01/15/2026 4:52pm
USER: CamersS

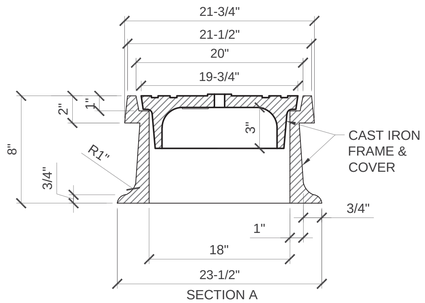

SECTION A

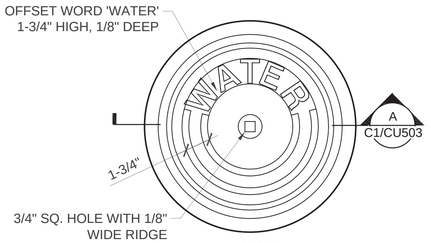

PLAN

C1 AIR RELEASE VALVE VAULT FRAME AND COVER DETAIL

SCALE: NTS

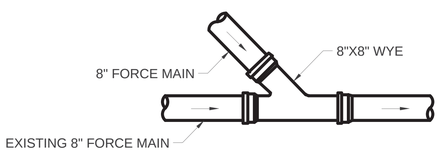

B1 WYE CONNECTION DETAIL

SCALE NTS

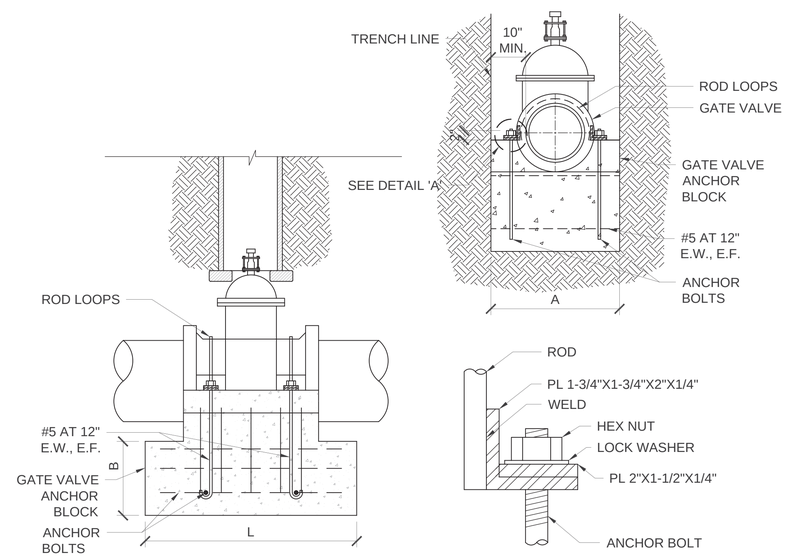

DETAIL 'A'

PIPE SIZE	A (WIDTH)	B (DEPTH)	L (LENGTH)
6"	43"	21"	21"
10"	71"	36"	36"
12"	86"	43"	43"

TYPE OF SOIL CONDITION	LATERAL BEARING PRESSURE
(SAND AND CLAY;	1000 LBS. PER SQ. FT.
MIXED OR IN LAYERS;.....	PER FT. OF DEPTH
FINE CONFINED SAND)	

NOTES:

1. GEOTECH REPORT PREPARED BY GEO-ENGINEERING & TESTING, INC., DATED FEBRUARY 2024.
2. APPLY BOND BREAKER BETWEEN GATE VALVE AND CONCRETE.
3. ANCHOR MATERIALS MUST BE HOT DIPPED GALVANIZED STEEL, AND COATED WITH ASPHALTIC MATERIAL AFTER INSTALLATION.
4. 3" CLEARANCE FOR REINFORCING STEEL.
5. ANCHOR BLOCK DESIGNED FOR VERTICAL LOAD ONLY.
6. STANDPIPE MUST BE PVC C-900.
7. FOR MANHOLES, ANCHOR BLOCKS CAN BE MADE AS PART OF FLOOR SLAB

B4 GATE VALVE ANCHOR BLOCK DETAIL

SCALE NTS

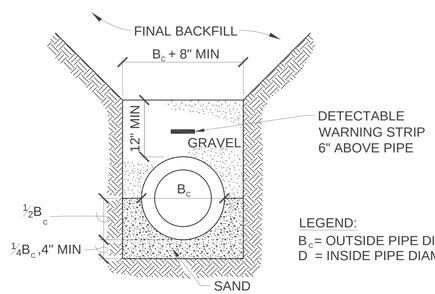

LEGEND:
B_c = OUTSIDE PIPE DIAMETER
D = INSIDE PIPE DIAMETER

PLASTIC PIPE

NOTES:

1. SEE SPECIFICATIONS FOR MATERIAL AND COMPACTION REQUIREMENTS.
2. MAXIMUM PARTICLE SIZE IN GRAVEL MUST BE 1/2" FOR PLASTIC PIPE OR COATED OR WRAPPED PIPE AND 3" MAXIMUM FOR OTHER TYPES OF PIPE.
3. EMBEDMENT SIDE CLEARANCE MUST BE 12 INCHES FOR PIPES LESS THAN 18 INCHES IN DIAMETER AND 18 INCHES FOR PIPE GREATER THAN 18 INCHES IN DIAMETER.
4. BEDDING DEPTH MUST BE INCREASED TO 6" IN ROCK CUTS.
5. MINIMUM COVER FOR CONSTRUCTION LOADS OVER PLASTIC PIPES MUST BE AS SPECIFIED IN ASTM D 2321.

A2 PIPE BEDDING DETAIL

SCALE NTS

NAVFAC

STATE OF TEXAS
JENNIFER M. HAYNES
90167
LICENSED PROFESSIONAL ENGINEER
1/20/2026
TEXAS REGISTERED ENGINEERING FIRM F-2966 SEAL

Jacobs / BURNS McDONNELL
JACOBS/B&M, A JOINT VENTURE
1100 NORTH GLEBE ROAD
SUITE 500
ARLINGTON, VA 22201
A/E Contract No. N62742-20-D-0002
A/E Task Order No. N6274221F0315
JCG NO. 03430603
A/E INFO

APPROVED
FOR COMMANDER NAVFAC DATE 02/02/2026

ACTIVITY
AFI/MSC APPROVAL PER NAVFAC SAT-TO CHECKLIST
SATISFACTORY TO DATE 31 DEC 2025

DES:	JMH	DRW: SMC	REV: ATM
PM/DM			KKK
BRANCH MANAGER			SMK
CHIEF ENG/ARCH			SMK
FIRE PROTECTION			RO

DEPARTMENT OF THE NAVY
NAVAL FACILITIES ENGINEERING SYSTEMS COMMAND
NAVFAC PACIFIC
NAVAL FACILITIES ENGINEERING SYSTEMS COMMAND – PACIFIC
JOINT REGION MARIANAS (JRM)
ANDERSEN AIR FORCE BASE
GUAM
FY24 AJJY183012 (P-012),
PDI: NORTH AIRCRAFT PARKING RAMP
UTILITY DETAILS

SCALE: AS SHOWN
EPROJECTS NO.: 1665555
CONSTR CONTROL NO.
NAVFAC DRAWING NO. 17361875
SHEET 252 OF 377

CU501

REDESIGN FINAL SUBMITTAL

FILE NAME: U:\BLDG\NAVFAC Pacific\03430603 – P-012 North Aircraft Parking Ramp\700 Working Documents\740 Sheets\740.01 Civil\P012_1665555_CU501.dwg
LAYOUT NAME: UTILITY DETAILS
PLOTTED: 01/13/2026 4:52pm
USER: ConnersS

IF SHEET IS LESS THAN 22" X 34" REDUCED PRINT. USE GRAPHIC SCALES

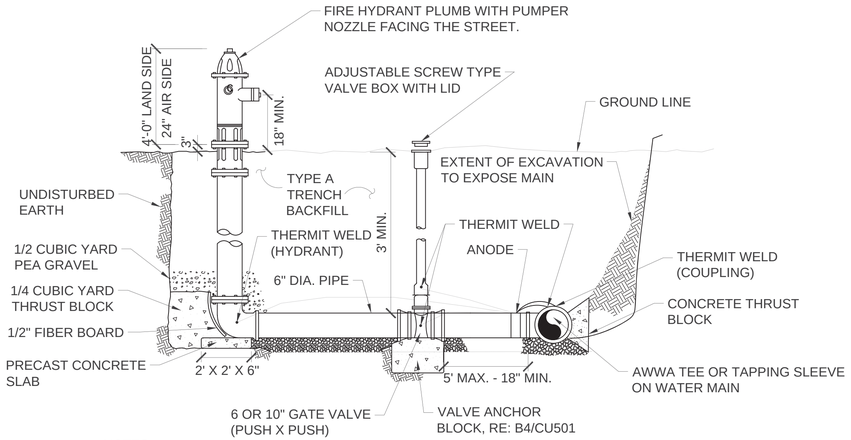

NOTES:
1. FIRE HYDRANT WILL ALSO REQUIRE A LOCATION MARKER FLAG.
2. FIRE HYDRANT MUST BE A MINIMUM OF 3' AND A MAXIMUM OF 10' FROM ROAD, AND WITHIN 10' OF THE OUTSIDE EDGE OF THE AIRFIELD SHOULDER.
3. AIRFIELD FIRE HYDRANT MUST HAVE A MAXIMUM HEIGHT OF 24".

C1 FIRE HYDRANT DETAIL
SCALE: NTS

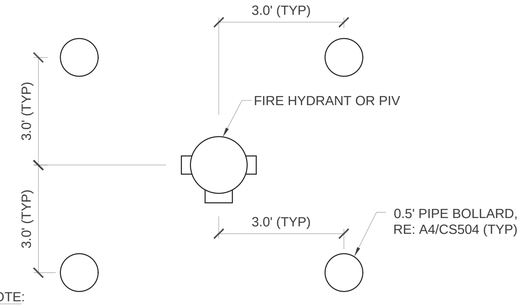

NOTE:
1. HYDRANTS DESIGNATED (LANDSIDE) ON PLANS MUST RECEIVE BOLLARDS. BOLLARDS MUST NOT BE PLACED AROUND HYDRANTS DESIGNATED (AIRSIDE).
2. ONLY ADD BOLLARDS ON THE SIDE OF THE HYDRANT OR POST INDICATOR VALVE EXPOSED TO VEHICLE TRAFFIC. A MINIMUM OF 2 BOLLARDS MUST BE INSTALLED.
3. INSTALL BOLLARDS AT LEAST 2' FROM THE EDGE OF ROADWAYS / VEHICULAR PAVEMENTS.

D3 TYPICAL PLACEMENT OF PIPE BOLLARD AT FIRE HYDRANT AND PIV
SCALE: NTS

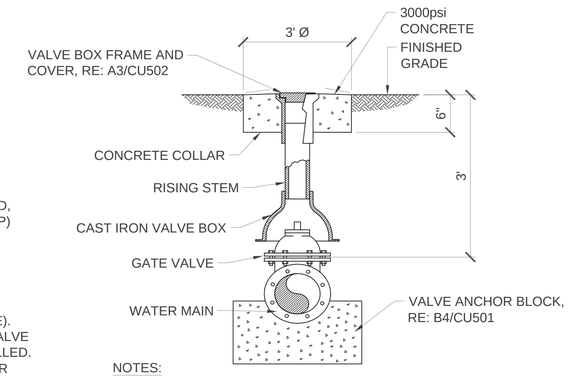

NOTES:
1. CAST AROUND THE TOP OF EACH VALVE BOX A CONCRETE COLLAR 3'-0" IN DIAMETER x 8" THICK WHEN VALVES ARE LOCATED IN ROADS, SIDEWALKS, OR OTHER PAVED AREAS.
2. CONCRETE DISK MAY BE USED IN NON PAVED AREAS AS A VALVE MARKER.

C4 GATE VALVE DETAIL
SCALE: NTS

BEARING AREA OF BLOCK IN SQ. FT.					
FITTING SIZES	TEE & END	90 DEG. BEND	45 DEG. BEND	22-1/2 DEG. BEND	11-1/4 DEG. BEND
6"	3.5	5.1	2.8	1.4	0.8
8"	6.3	8.8	5.0	2.4	1.3
10"	9.7	13.8	7.4	3.9	2.0
12"	14.3	20.1	10.8	5.6	2.8
16"	12.6	17.8	19.2	9.7	4.9

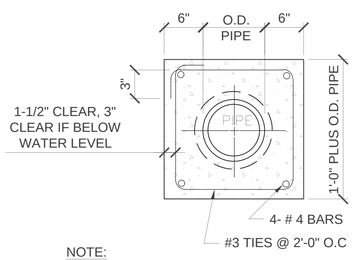

NOTE:
1. REINFORCING STEEL MUST BE DEFORMED BARS AND LAPPED 14" AT SPLICES.

B1 CONCRETE ENCASED PIPE DETAIL
SCALE: NTS

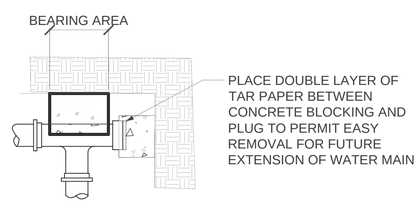

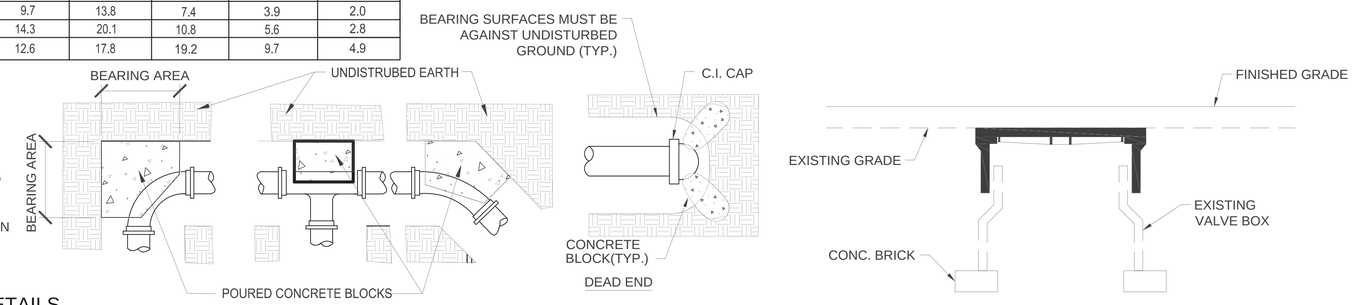

B2 THRUST BLOCK DETAILS
SCALE: NTS

STEP 1

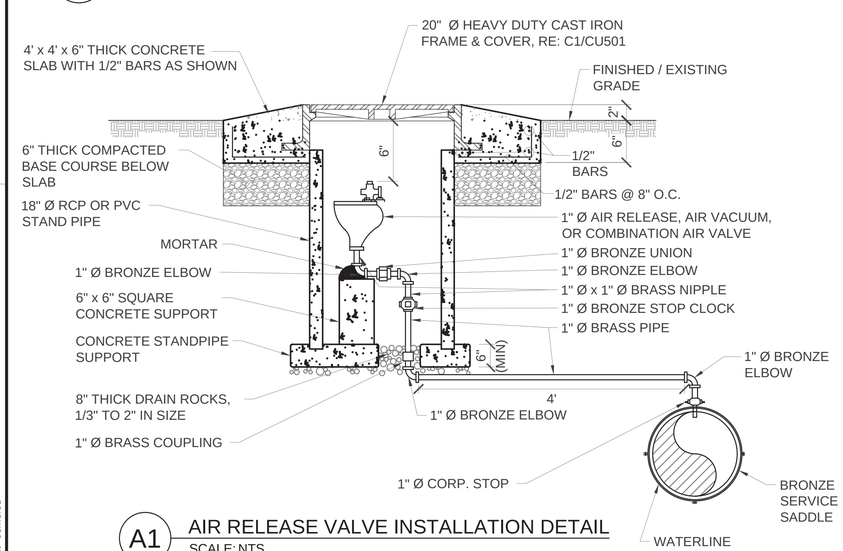

A1 AIR RELEASE VALVE INSTALLATION DETAIL
SCALE: NTS

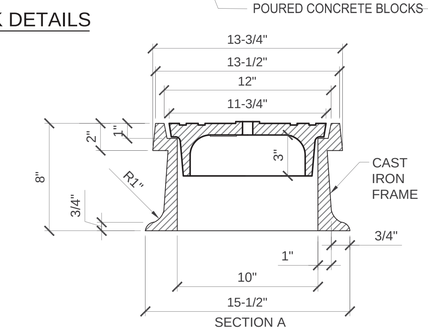

SECTION A

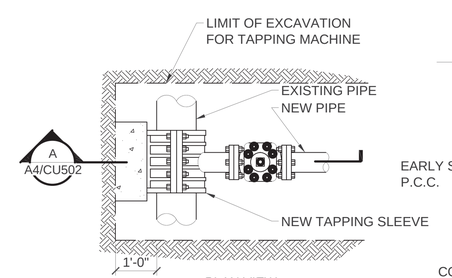

PLAN VIEW

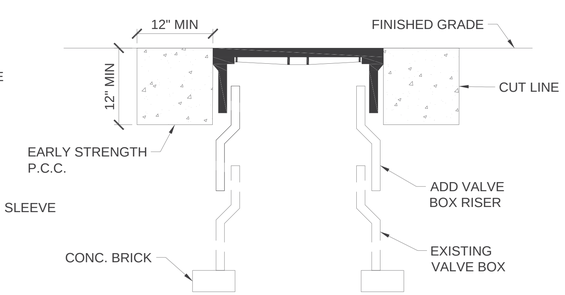

STEP 2, 3 & 4

NOTE:
1. COVER EXISTING VALVE BOX WITH APPROVED MATERIAL.
2. EXCAVATE AREA AROUND VALVE BOX 12" MINIMUM FROM VALVE BOX FRAME.
3. RAISE VALVE BOX TO FINISHED GRADE PROFILE AND CROSS SLOPE.
4. BACKFILL WITH EARLY STRENGTH PORTLAND CEMENT CONCRETE (P.C.C.).

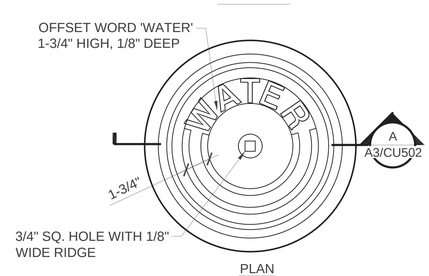

PLAN

A3 VALVE BOX FRAME AND COVER DETAIL
SCALE: NTS

A4 WATER VALVE COVER ADJUSTMENT DETAIL
SCALE: NTS

STATE OF TEXAS
JENNIFER M. HAYNES
90167
LICENSED PROFESSIONAL ENGINEER
1/20/2026
TEXAS REGISTERED ENGINEERING FIRM F-2966 SEAL

Jacobs / BURNS McDONNELL
JACOBS/B&M, A JOINT VENTURE
1100 NORTH GLEBE ROAD
SUITE 500
ARLINGTON, VA 22201
A/E Contract No. N62742-20-D-0002
A/E Task Order No. N6274221F0315
JCG NO. 03430603
A/E INFO

APPROVED
FOR COMMANDER NAVFAC DATE 02/02/2026

ACTIVITY
AFIMSC APPROVAL PER NAVFAC SAT-TO CHECKLIST

SATISFACTORY TO DATE 31 DEC 2025

DES:	JMH	DRW:	SMC	REV:	ATM
PM/OM					KKK
BRANCH MANAGER					SMK
CHIEF ENG/ARCH					SMK
FIRE PROTECTION					RO

DEPARTMENT OF THE NAVY
NAVFAC PACIFIC
NAVAL FACILITIES ENGINEERING SYSTEMS COMMAND
NAVAL FACILITIES ENGINEERING SYSTEMS COMMAND – PACIFIC
JOINT REGION MARIANAS (JRM)
ANDERSEN AIR FORCE BASE
GUAM
FY24 AJJY183012 (P-012)
PDI: NORTH AIRCRAFT PARKING RAMP
UTILITY DETAILS

SCALE: AS SHOWN
EPROJECTS NO.: 1665555
CONSTR CONTROL NO.
NAVFAC DRAWING NO. 17361876
SHEET 253 OF 377
CU502

REDESIGN FINAL SUBMITTAL

FILE NAME: U:\BLDG\NAVFAC Pacific\03430603 – P-012 North Aircraft Parking Ramp\700 Working Documents\740 Sheets\740.01 Civil\P012_1665555_CU502.dwg
LAYOUT NAME: UTILITY DETAILS
PLOTTED: 01/13/2026 4:59pm
USER: CamersS

IF SHEET IS LESS THAN 22" X 34" REDUCED PRINT. USE GRAPHIC SCALES

GENERAL NOTES

A. BUILDING AND DESIGN CODES:

1. UNIFIED FACILITIES CRITERIA.
a. UFC 1-200-01, DOD BUILDING CODE, CHANGE 4, 17 DECEMBER 2024
b. UFC 3-301-01, STRUCTURAL ENGINEERING, CHANGE 4, 3 JUNE 2025
c. UFC 4-010-01 - DOD MINIMUM ANTITERRORISM STANDARDS FOR BUILDINGS (CHANGE 3, 24 MAY 2024)
e. UFC 4-020-01 DOD SECURITY ENGINEERING FACILITIES PLANNING MANUAL (11 SEPTEMBER 2008)
d. UNITED FACILITIES GUIDE SPECIFICATION (UFGS)

2. IBC, INTERNATIONAL BUILDING CODE (2024)

3. ASCE 7-22, MINIMUM DESIGN LOADS AND ASSOCIATED CRITERIA FOR BUILDINGS AND OTHER STRUCTURES.

4. ACI 318-19(22); BUILDING CODE REQUIREMENTS FOR STRUCTURAL CONCRETE.

5. CRSI MANUAL OF STANDARD PRACTICE, 29th EDITION.

6. ACI 357.3R-14, DESIGN AND CONSTRUCTION OF WATERFRONT AND COASTAL CONCRETE MARINE STRUCTURES (2014).

B. DESIGN LOADS:

1. LIVE LOADS: — UNIFORM LOAD
a. EQUIPMENT YARD SLAB ON GRADE — 150 PSF

2. DEAD LOADS (SUPERIMPOSED):
a. MECHANICAL AND ELECTRICAL EQUIPMENT:

EQUIPMENT	DIMENSIONS(LxWxH)	WEIGHT(LBS)
TRANSFORMER	72x72x60 (INCHES)	600
ELECTRICAL EQUIPMENT RACK	72x24x72 (INCHES)	200

3. WIND LOADS:
a. ENCLOSURE CLASSIFICATION - OPEN
b. ULTIMATE DESIGN WIND SPEED - Vult = 195 MPH
c. NOMINAL DESIGN WIND SPEED - Vasd = 147 MPH
d. RISK CATEGORY - II
e. EXPOSURE - D

4. SEISMIC LOADS:
a. RISK CATEGORY - II
b. SEISMIC IMPORTANCE FACTOR = 1.0
c. MAPPED SPECTRAL RESPONSE ACCELERATIONS - Ss = 3.08g, S1 = 0.66g
d. SITE CLASS - C
e. SPECTRAL RESPONSE COEFFICIENTS - Sds = 2.17g, Sd1 = 0.63g
f. SEISMIC DESIGN CATEGORY - D
g. BASIC SEISMIC FORCE RESISTING SYSTEM - SPECIAL REINFORCED CONCRETE MOMENT FRAMES
h. ANALYSIS PROCEDURE - EQUIVALENT LATERAL FORCE PROCEDURE
j. SEISMIC RESPONSE COEFFICIENT - 0.272
k BASE SHEAR - V = 32.6 KIP
l. RESPONSE MODIFICATION FACTOR, R= 8
m. DEFLECTION AMPLIFICATION FACTOR, Cd= 5.5
n. OVERSTRENGTH FACTOR, Ω_0= 3
o. DESIGN NONSTRUCTURAL COMPONENTS AND ANCHORAGE FOR SEISMIC LOADING IN ACCORDANCE WITH ASCE 7 CH 13, OR UFC 3-301-01, WHICHEVER IS LARGEST.

5. SNOW LOADS:
a. RISK CATEGORY - II
b. SNOW IMPORTANCE FACTOR = 1.0
c. GROUND SNOW LOAD, PG = 0.0 PSF
d. FROST PENETRATION DEPTH = 0 IN

6. ENVIRONMENTAL SEVERITY CATEGORY (ESC) = C5

C. GENERAL REQUIREMENTS:

1. SPECIFICATIONS ARE PART OF THE CONSTRUCTION DOCUMENTS AND MUST BE USED IN CONJUNCTION WITH THE DRAWINGS.

2. VERIFY EXISTING CONDITIONS AND DIMENSIONS PRIOR TO BEGINNING WORK OR FABRICATING MATERIALS. NOTIFY CONTRACTING OFFICER OF DISCREPANCIES BEFORE PROCEEDING WITH WORK.

3. VERIFY THE LOCATION OF CHASES, INSERTS, OPENINGS, SLEEVES, DEPRESSIONS, PADS, AND WALL OPENINGS.

4. DO NOT SCALE DRAWINGS FOR THE PURPOSE OF ESTABLISHING DIMENSIONS.

5. DETAILS LABELED "TYPICAL DETAILS" ON DRAWINGS APPLY TO SITUATIONS OCCURRING ON THE PROJECT THAT ARE THE SAME AS TO THOSE SPECIFICALLY DETAILED. SUCH DETAILS APPLY WHETHER OR NOT DETAILS ARE REFERENCED AT EACH LOCATION. NOTIFY CONTRACTING OFFICER OF CONFLICTS REGARDING APPLICABILITY OF "TYPICAL DETAILS".

6. DO NOT LOAD THE SLAB ON GRADE OR SUSPENDED SLAB WITH ERECTION CRANES OR ERECTION EQUIPMENT. THE SLABS HAVE NOT BEEN DESIGNED FOR CRANE LOADS AND WILL REQUIRE AN INCREASE IN THICKNESS AND REINFORCEMENT. OBTAIN CONTRACTING OFFICER APPROVAL ON CRANE SUPPORT PLAN FOR SLABS PRIOR TO COMMENCING WORK.

7. DO NOT STORE OR STACK CONSTRUCTION MATERIALS ON POURED OR ERECTED FLOORS/ROOFS IN EXCESS OF 80 PERCENT OF LIVE LOAD. GENERAL CONTRACTOR WILL ENSURE THAT SUB-CONTRACTORS ARE INFORMED OF LOADING RESTRICTIONS AVOID IMPACT WHEN PLACING MATERIALS ON POURED OR ERECTED FLOORS OR ROOF.

8. THE CONTRACT STRUCTURAL DOCUMENTS REPRESENT THE FINISHED STRUCTURE. THE CONTRACTOR IS RESPONSIBLE FOR THE MEANS AND METHODS OF CONSTRUCTION. PROVIDE MEASURES REQUIRED TO PROTECT THE STRUCTURE, WORKMEN, AND OTHER PERSONS DURING CONSTRUCTION, INCLUDING BRACING, SHORING FOR CONSTRUCTION, EQUIPMENT SHORING FOR THE BUILDING, FORMS AND SCAFFOLDING, SHORING OF RETAINING WALLS & OTHER TEMPORARY SUPPORTS AS REQUIRED.

GENERAL NOTES CONT

9. PRINCIPAL OPENINGS THROUGH THE FRAMING ARE SHOWN ON DRAWINGS. EXAMINE THE ARCHITECTURAL AND MECHANICAL DRAWINGS FOR THE REQUIRED OPENINGS AND PROVIDE FOR REQUIRED OPENINGS WHETHER SHOWN ON THE STRUCTURAL DRAWINGS OR NOT. VERIFY SIZE AND LOCATION OF OPENINGS WITH THE MECHANICAL CONTRACTOR. DEVIATIONS FROM THE OPENINGS SHOWN ON THE STRUCTURAL DRAWINGS MUST BE APPROVED PRIOR TO IMPLEMENTING THE CHANGES.

CONCRETE NOTES

A. PROVIDE CONCRETE AS SHOWN BELOW. PROVIDE BATCH MIXING, TRANSPORTATION, PLACING AND CURING OF CONCRETE IN ACCORDANCE WITH RECOMMENDATIONS OF ACI 301, ACI 318 AND ASTM C94. USE PORTLAND CEMENT OF THE TYPES SPECIFIED BELOW, UNLESS OTHERWISE NOTED. PROVIDE ADMIXTURES AND SPECIAL REQUIREMENTS AS SPECIFIED. CONCRETE IS EXPOSURE CATEGORY C2 IN ACCORDANCE WITH TABLE 19.3.1.1 IN ACI 318.

1. NORMAL WEIGHT (150 PCF), F'c = 5,000 PSI CONCRETE AT 28 DAYS, TYPE I/II CEMENT WITH A MAX WATER - CEMENTITIOUS RATIO OF 0.40.
a. CONCRETE FOOTINGS, BEAMS, COLUMNS, AND WALLS.

B. CONCRETE MUST REACH THE FOLLOWING PERCENTAGES OF ITS 28 DAY COMPRESSIVE STRENGTH (F'c) BEFORE FORMS MAY BE REMOVED.

1. WALLS, COLUMNS AND GRADE AND ELEVATED BEAM SIDES - 40 PERCENT

2. BEAM BOTTOMS - 85 PERCENT

3. SHORING FOR FLOOR OR ROOF SYSTEM - 85 PERCENT

C. PROVIDE CONCRETE MIXES DESIGNED BY A QUALIFIED TESTING LABORATORY FOR REVIEW AND APPROVAL BY THE STRUCTURAL ENGINEER.

D. PROVIDE CONSTRUCTION AND CONTROL JOINTS AS INDICATED ON DRAWINGS. HORIZONTAL CONSTRUCTION JOINTS ARE NOT ALLOWED UNLESS SPECIFICALLY NOTED OR APPROVED BY STRUCTURAL ENGINEER. NOTIFY STRUCTURAL ENGINEER OF CONSTRUCTION JOINT OR CONTROL JOINT LOCATIONS WHICH ARE DIFFERENT OR IN ADDITION TO JOINTS INDICATED ON DRAWINGS.

E. PROVIDE CONSTRUCTION JOINTS IN WALLS, ELEVATED SLABS, AND ELEVATED BEAMS SPACED LESS THAN 65 FEET APART.

F. CHAMFER EXPOSED EDGES 3/4 INCH UNLESS OTHERWISE NOTED.

G. WIRE BRUSH AND CLEAN CONSTRUCTION JOINTS PRIOR TO POURING CONCRETE.

H. REFERENCE OTHER DISCIPLINE'S DRAWINGS FOR SUB-SLAB PIPING AND SLAB AND WALL PENETRATIONS.

J. PROVIDE STRUCTURAL FRAMING AS APPROVED BY STRUCTURAL ENGINEER FOR MECHANICAL OPENINGS THROUGH THE SLABS, WALLS, AND FLOORS. OPENINGS WILL NOT BE PERMITTED THROUGH BEAMS UNLESS SPECIFICALLY DETAILED.

CONCRETE REINFORCING STEEL NOTES

A. PROVIDE DETAILING, FABRICATION, AND INSTALLATION OF REINFORCING AND ACCESSORIES IN ACCORDANCE WITH ACI 315 AND ACI 318.

B. PROVIDE STEEL REINFORCING BARS IN ACCORDANCE WITH ASTM A615 OR ASTM A706, GRADE 60.

1. FOR ASTM A615 GRADE 60 STEEL REINFORCING BARS, THE FOLLOWING CRITERIA MUST BE SATISFIED:

a. ACTUAL YIELD STRENGTH BASED ON MILL TESTS DOES NOT EXCEED Fy BY MORE THAN 18,000 PSI.
b. RATIO OF THE ACTUAL TENSILE STRENGTH TO THE ACTUAL YIELD STRENGTH IS AT LEAST 1.25
c. MINIMUM FRACTURE ELONGATION IN 8 INCHES MUST BE AT LEAST 14 PERCENT FOR BAR SIZES NO. 3 THROUGH NO. 6, AT LEAST 12 PERCENT FOR BAR SIZES NO. 7 THROUGH NO. 11, AND AT LEAST 10 PERCENT FOR BAR SIZES NO.14 AND NO.18.
d. MINIMUM UNIFORM ELONGATION MUST BE AT LEAST 9 PERCENT FOR BAR SIZES NO. 3 THROUGH NO.10, AND AT LEAST 6 PERCENT FOR BAR SIZES NO. 11 THROUGH NO. 18.

2. FOR ASTM A706 GRADE 60 REINFORCING, THE FOLLOWING CRITERIA MUST BE SATISFIED:

a. MINIMUM UNIFORM ELONGATION MUST BE 9% FOR #3 THROUGH #10 BARS AND 6% FOR #11 AND LARGER BARS, WITH UNIFORM ELONGATION DETERMINED AS THE ELONGATION AT THE MAXIMUM FORCE SUSTAINED BY THE REINFORCING BAR TEST PIECE.
b. THE RADIUS AT THE BASE OF EACH DEFORMATION MUST BE AT LEAST 1.5 TIMES THE HEIGHT OF THE DEFORMATION, MEASURED AS INDICATED IN ACI 318, SECTION 20.2.1.3.

C. PROVIDE ANCHOR RODS IN ACCORDANCE WITH THE STANDARDS OF ASTM F1554 GRADE 55 (WELDABLE) UNLESS OTHERWISE NOTED.

D. COORDINATE PLACEMENT OF CAST-IN-PLACE EMBEDS AND ANCHOR RODS. SET ANCHOR RODS WITH A TEMPLATE. ATTACH EMBED ITEMS TO FORM WORK OR REINFORCING.

E. PROVIDE CLASS "B" REINFORCEMENT SPLICES FOR CONTINUOUS REINFORCEMENT. PROVIDE STANDARD 90-DEGREE HOOKS IN ACCORDANCE WITH ACI 318, UNLESS OTHERWISE NOTED.

F. MAINTAIN THE FOLLOWING CONCRETE COVERAGE FOR REINF STEEL UNLESS OTHERWISE NOTED:

1. CONCRETE CAST AGAINST AND PERMANENTLY EXPOSED TO EARTH - 3 INCHES

2. CONCRETE EXPOSED TO EARTH OR WEATHER - 2 INCHES

3. CONCRETE NOT EXPOSED TO WEATHER OR IN CONTACT WITH THE GROUND:

a. SLABS AND WALLS - NO. 11 AND SMALLER - 2 INCH
b. BEAMS AND COLUMNS: PRIMARY REINFORCEMENT, TIES, STIRRUPS - 2 INCHES

G. DO NOT WELD OR BEND REINFORCEMENT IN THE FIELD UNLESS SPECIFICALLY SHOWN OR APPROVED BY STRUCTURAL ENGINEER.

H. WHEN SPECIFICALLY APPROVED, PROVIDE WELDED REINFORCEMENT IN ACCORDANCE WITH ASTM A 706. USE LOW HYDROGEN ELECTRODES FOR WELDING OF REINFORCEMENT IN CONFORMANCE WITH "WELDING REINFORCEMENT STEEL, METAL INSERTS AND CONNECTIONS IN REINFORCED CONCRETE CONSTRUCTION", AMERICAN WELDING SOCIETY, AWS D1.4.

J. WHERE REQUIRED, PROVIDE DOWELS TO MATCH SIZE AND SPACING OF MAIN REINFORCING.

K. PROVIDE CONTINUOUS HORIZONTAL WALL REINFORCEMENT WITH 90-DEGREE BENDS AND EXTENSIONS AT CORNERS AND INTERSECTIONS AS SHOWN ON TYPICAL BAR PLACING DETAILS.

L. PROVIDE BAR SUPPORT ACCESSORIES IN ACCORDANCE WITH THE LATEST ACI MANUAL OF STANDARD PRACTICE FOR DETAILING REINFORCED CONCRETE STRUCTURES. SUPPORT BEAM REINFORCING ON BEAM BOLSTERS SPACED NOT MORE THAN 4 FEET ON CENTER.

M. PROVIDE BAR SUPPORTS WITH PLASTIC COATED LEGS OR HOT DIP GALVANIZING AFTER FABRICATION FOR CONCRETE EXPOSED TO VIEW. PROVIDE STAINLESS STEEL BAR SUPPORTS FOR CONCRETE TO RECEIVE A SANDBLAST FINISH.

DELEGATED ENGINEERING SYSTEMS

A. THE FOLLOWING ITEMS ARE DELEGATED ENGINEERING SYSTEMS, PENDING APPROVAL OF THE CONTRACTING OFFICER:

1. MECHANICAL, PLUMBING, ELECTRICAL, FIRE PROTECTION AND OTHER EQUIPMENT, CURBS, AND CONNECTIONS TO SUPPORTING FRAMING, INCLUDING BRACING TO RESIST APPLICABLE SEISMIC LOADS.

2. PIPING, CONDUITS, DUCTS, PLUMBING AND SUPPORTING FRAMING AND ATTACHMENTS INCLUDING BRACING TO RESIST APPLICABLE SEISMIC LOADS.

3. FORMS FOR CAST IN PLACE CONCRETE.

4. EXTERIOR DOORS, CONNECTIONS, AND CONNECTIONS TO BUILDING STRUCTURE.

B. DELEGATED ENGINEERING SYSTEMS MUST BE ACCOMPANIED BY CALCULATIONS SIGNED BY A PROFESSIONAL ENGINEER.

C. DELEGATED ENGINEERING SYSTEMS MUST BE SUBMITTED PRIOR TO INSTALLATION AND MUST BE APPROVED BY THE CONTRACTING OFFICER FOR GENERAL CONFORMANCE TO THE DESIGN ASSUMPTION INTENT.

D. SUBMITTALS (WITH SHOP DRAWING REVIEW STAMPS ON THEM) MUST BE SUBMITTED TO THE CONTRACTING OFFICER FOR REVIEW AND APPROVAL. A LETTER STATING THAT THE SUBMITTAL HAS BEEN REVIEWED AND COORDINATED AND HAS BEEN FOUND ACCEPTABLE WITHOUT EXCEPTIONS MUST ACCOMPANY THE SUBMITTAL..

SYM	DESCRIPTION	DATE

NAVFAC

STATE OF TEXAS
ALEX BANNEROT
91686
LICENSED PROFESSIONAL ENGINEER
01/20/26
TEXAS REGISTERED ENGINEERING FIRM F-2966 SEAL

Jacobs / BURNS McDONNELL
JACOBS/B&M, A JOINT VENTURE
1100 NORTH GLEBE ROAD
SUITE 500
ARLINGTON, VA 22201
A/E Contract No. N62470-20-D-0002
A/E Task Order No. N62742-19-1010
JKO NO. 2040063 A/E INFO

APPROVED
FOR COMMANDER NAVFAC DATE 02/02/2026

ACTIVITY
AFIMSC APPROVAL PER NAVFAC SAT-TO CHECKLIST

SATISFACTORY TO DATE 31 DEC 2025

DES: AB	DRW: DO	REV: AS
PM/DM		KKK
BRANCH MANAGER		SMK
CHIEF ENG/ARCH		SMK
FIRE PROTECTION		RO

DEPARTMENT OF THE NAVY
NAVAL FACILITIES ENGINEERING SYSTEMS COMMAND
NAVFAC PACIFIC
NAVAL FACILITIES ENGINEERING SYSTEMS COMMAND ~ PACIFIC
JOINT REGION MARIANAS (JRM)
ANDERSEN AIR FORCE BASE
GUAM

FY24 AJJY183012 (P-012),
PDI: NORTH AIRCRAFT PARKING RAMP

STRUCTURAL GENERAL NOTES

SCALE: AS SHOWN
EPROJECTS NO.: 1665555
CONSTR CONTROL NO.
NAVFAC DRAWING NO. 17361877
SHEET 254 OF 377

S-001

REDESIGN FINAL SUBMITTAL

IF SHEET IS LESS THAN 22" X 34" REDUCED PRINT. USE GRAPHIC SCALES

FILE NAME: C:\Users\ortondp\Documents\P012-1665555-S-3D_dave60.rvt
LAYOUT NAME: STRUCTURAL GENERAL NOTES
PLOTTED: 1/16/2026 6:32:54 AM
USER: DO

FOUNDATION NOTES

A. REFER TO THE SPECIFICATIONS AND FOUNDATION NOTES BELOW FOR GENERAL REQUIREMENTS OF EARTHWORK, OVER EXCAVATION, SUBGRADE PREPARATION, FILL AND COMPACTION, WATERPROOFING AND OTHER PERTINENT REQUIREMENTS AND INFORMATION.

B. FOUNDATION DESIGN IS BASED ON GEOTECHNICAL REPORT FY24 MCAF P-012 AJJY183012 NORTH RAMP, ANDERSEN AIR FORCE BASE, GUAM, GEOTECHNICAL REPORT FOR 95% DESIGN, PREPARED BY JACOBS, ANNIKA SEAY, TONY STEIN, KEVIN PUETZ, NICHOLAS ROTH P.E., SHANE RASCH P.E., DATED 06 NOVEMBER 2025.

C. FOUNDATIONS ARE DESIGNED FOR AN ALLOWABLE NET BEARING PRESSURE OF 5,000 PSF FOR GRAVITY LOADS. AN ALLOWABLE NET BEARING PRESSURE OF 6667 PSF CAN BE USED FOR LOAD COMBINATIONS INCLUDING SHORT TERM LOADS (SEISMIC AND WIND).

D. PROTECT PIPES AND CONDUITS RUNNING THRU WALLS AND SLABS WITH 1/2 INCH EXPANSION MATERIAL. LOWER CONTINUOUS FOOTINGS AND GRADE BEAMS PERPENDICULAR TO PIPE RUNS, TO ALLOW PIPES TO PASS ABOVE THE FOOTINGS OR THROUGH THE GRADE BEAMS. ALTERNATIVELY, PROVIDE A CONCRETE JACKET IF PIPES ARE LOW ENOUGH TO BE PLACED BELOW THE FOOTINGS AND GRADE BEAMS. LOWER FOOTINGS AND GRADE BEAMS PARALLEL TO PIPE RUNS TO AVOID SURCHARGE ONTO ADJACENT TRENCH EXCAVATIONS.

E. MAINTAIN SUBGRADE AND FILL MOISTURE CONTENT UNTIL FOUNDATIONS ARE PLACED.

F. ARRANGE FOR INDEPENDENT TESTING AGENCY TO MONITOR CUT AND FILL OPERATIONS, AND PERFORM FIELD DENSITY AND MOISTURE CONTENT TESTS TO VERIFY COMPACTION AND APPROVE FOOTING SUBGRADE PRIOR TO PLACING CONCRETE.

G. DO NOT PLACE FOOTINGS OR SLABS AGAINST SUBGRADE CONTAINING FREE WATER.

H. MAINTAIN SITE DRAINAGE DURING CONSTRUCTION TO ENSURE SURFACE RUNOFF AWAY STRUCTURES AND TO PREVENT PONDING OF SURFACE RUNOFF NEAR THE STRUCTURES.

J. KEEP OPEN EXCAVATIONS AROUND BUILDING DRY. BACKFILL AGAINST FOUNDATIONS AND GRADE BEAMS AS SOON AS PRACTICAL. PUMP WATER OUT OF OPEN EXCAVATIONS IF FLOODED PRIOR TO BACKFILLING.

K. DO NOT BACKFILL AGAINST WALLS, WHEREVER FEASIBLE, GROUND FLOOR SLABS HAVE ATTAINED 75 PERCENT OF THE SPECIFIED 28-DAY COMPRESSIVE STRENGTH. IF THE WALLS ARE BACKFILLED PRIOR TO COMPLETION OF GROUND FLOORS BEFORE THE SPECIFIED PERCENT STRENGTH CAN BE ATTAINED, BRACE THE WALLS FOR THE SPECIFIED DESIGN PRESSURE. OBTAIN THE APPROVAL OF THE ENGINEER FOR THE ADEQUACY OF SUCH BRACE.

L. FORM SIDES OF BEAMS STRAIGHT AND TO SPECIFIED DIMENSIONS. EARTH FORMS WILL NOT BE PERMITTED.

M. REFER TO CIVIL DRAWINGS FOR LIMITS OF EXCAVATIONS.

N. SITE PREPARATION AND GRADING

1. CLEARING AND STRIPPING – INITIALLY, CLEAR VEGETATION FROM AREAS REQUIRING GRADING. THEREAFTER, STRIP SURFACE SOIL WITH ROOTS AND REMOVE AWAY OR TEMPORARILY STOCKPILE AT SELECTED LOCATIONS ON THE SITE FOR LATER REUSE IN LANDSCAPING.

2. CUT EXISTING PAVEMENT REQUIRING REMOVAL IN A NEAT MANNER SO AS NOT TO DISTURB ADJOINING ASPHALT CONCRETE PAVEMENT AND ITS BASE/SUB-BASE. MINIMIZE DISTURBING THE FINAL EXPOSED SURFACES.

3. FOUNDATION EXCAVATION: EXCAVATE FOOTINGS AT LEAST 12 INCHES WIDER THAN THE FOOTING DIMENSION AND AT LEAST 5' WIDER THAN BUILDING SLABS AND CONCRETE PADS ALL AROUND. MAKE THE FOLLOWING STRUCTURAL FOUNDATION SUBGRADE IMPROVEMENTS, WHICHEVER IS APPLICABLE:

   a. WHERE FOUNDATION EXCAVATION EXPOSES MODERATELY HARD TO HARD CORALLINE LIMESTONE ROCK, IT MAY STOP AFTER REACHING THE DESIGNED FOOTING DEPTH; CLEAN THE ROCK SURFACE TO THE EXTENT POSSIBLE. IF THE EXPOSED ROCK SURFACE IS HARD AND UNEVEN, LEVEL IT WITH LEAN CONCRETE OR SAND-CEMENT MIXTURE HAVING AT LEAST 1,500 PSI 28-DAY COMPRESSIVE STRENGTH, WITH A MINIMUM ONE (1) INCH OF CONCRETE/CEMENT ABOVE THE HIGHEST POINT OF THE VARIABLE ROCK SURFACE.

   b. IF THE EXPOSED SURFACE IS NATIVE CORALLINE LIMESTONE OR DENSE LIMESTONE SAND/GRAVEL SOIL AND IT CAN BE SCARIFIED, SCARIFY AND LEVEL THE UPPER 4 TO 6 INCHES, MOISTURE CONDITION AS NECESSARY AND COMPACT TO AT LEAST 100 PERCENT OF ITS MDD WITH A UNIFORM, DENSE AND UNYIELDING SURFACE.

   c. IF THE EXPOSED SURFACE IS VERY WEAK TO WEAK CORALLINE LIMESTONE, SANDY SILT OR CLAYEY SILTY SOIL, OR LOOSE TO MEDIUM DENSE SAND/GRAVEL, EXCAVATE ENTIRELY OR TO A MINIMUM DEPTH AS DETERMINED BY GEOTECHNICAL ENGINEER OR DESIGNATED REPRESENTATIVE DURING CONSTRUCTION. THEREAFTER, SCARIFY THE EXPOSED SURFACE TO A MINIMUM OF 6 INCHES DEEP MOISTURE CONDITION AND COMPACT TO AT LEAST 100 PERCENT OF ITS MDD WITH A DENSE AND UNYIELDING SURFACE. PLACE APPROVED LIMESTONE SILTY SAND/GRAVEL (SUB-BASE) BACKFILL SOIL IN 8-INCH LOOSE LAYERS, MOISTURE CONDITION AND COMPACT TO AT LEAST 100 PERCENT OF ITS MDD WITH A UNIFORM, DENSE AND UNYIELDING SURFACE.

   d. A SUB-SLAB OR MUD-SLAB LAYER SUCH AS 4 INCHES OF LOW STRENGTH CONCRETE OR SAND-CEMENT MIXTURE MAY BE USED TO COVER THE FOOTING FOUNDATIONS TO PROTECT THE FOOTING SUBGRADES AND FACILITATE PLACEMENT OF REINFORCING STEEL BARS.

4. ADDITIONAL FOUNDATION CONSIDERATIONS: BASED ON THE GRADING, THERE IS A POTENTIAL THAT THE SAME STRUCTURE COULD BEAR ON TWO DIFFERENT MATERIALS. IF THIS OCCURS, PERFORM CORRECTIVE MEASURES TO CONTROL DIFFERENTIAL MOVEMENT, ACCORDING TO THE FOLLOWING:

   a. WHERE THIS LIKELY TO OCCUR IN A GIVEN STRUCTURE, OPEN THE ENTIRE FOUNDATION FOOTPRINT OR "POTHOLE" TO DETERMINE THE PERCENTAGE OF AREA WHERE THE STRUCTURE WILL BE FOUNDED ON FILL OR ROCK. IF THE ROCK IS RELATIVELY SHALLOW, OVEREXCAVATE THE FILL TO ROCK AND BACKFILL WITH A STRUCTURAL CONCRETE THE WIDTH OF THE FOOTING.

   b. ALTERNATIVELY BREAK OUT THE ROCK TO A DEPTH OF 3 FEET BELOW THE FOOTING AND 1 FOOT ON BOTH SIDES OF THE FOOTING, AND BACKFILL WITH A STRUCTURAL FILL.

FOUNDATION NOTES CONT

   c. AFTER OPENING, THE GEOTECHNICAL ENGINEER OR DESIGNATED REPRESENTATIVE MUST OBSERVE FOOTING EXCAVATIONS. PLACE CONCRETE AS QUICKLY AS POSSIBLE TO AVOID EXPOSURE OF THE FOOTING BOTTOMS TO WETTING AND DRYING.

   d. DRAIN SURFACE RUNOFF WATER AWAY FROM THE EXCAVATIONS AND DO NOT ALLOW WATER TO POND. IF POSSIBLE, THE PLACE THE FOUNDATION CONCRETE DURING THE SAME DAY THE EXCAVATION IS MADE. IF IT IS REQUIRED FOR FOOTING EXCAVATIONS TO BE LEFT OPEN FOR MORE THAN ONE CONSECUTIVE 24-HOUR PERIOD, PROTECT THE SOILS IN THE EXCAVATION TO REDUCE EVAPORATION OR ENTRY OF MOISTURE. REMOVE SOFT OR LOOSE SOIL ZONES ENCOUNTERED AT THE BOTTOM OF THE FOOTING EXCAVATIONS TO THE LEVEL OF COMPETENT NATURALLY DEPOSITED SOILS OR COMPACTED STRUCTURAL FILL AS DIRECTED BY THE GEOTECHNICAL ENGINEER OR DESIGNATED REPRESENTATIVE. BACKFILL CAVITIES WHICH FORM AS A RESULT OF THE EXCAVATION OF SOFT OR LOOSE SOIL ZONES WITH LEAN CONCRETE OR DENSE GRADED COMPACTED CRUSHED STONE.

5. SITE CLEARING AND PREPARATION:

   a. PRIOR TO PLACEMENT OF FILLS, PAVEMENTS OR STRUCTURES, STRIP THE VEGETATION, ROOTS, OLD ROADBEDS, SOFT, ORGANIC, AND OTHER UNSUITABLE SOILS IN THE CONSTRUCTION AREAS FROM THE SITE AND EITHER WASTE OR STOCKPILE FOR LATER USE IN NON-LOAD BEARING AREAS. REMOVE ORGANIC MATERIALS THAT COMPRISE MORE THAN 5% BY VOLUME OF THE SOIL OR ARE LARGER THAN A ¼-INCH IN DIAMETER FROM THE CONSTRUCTION AREAS.

   b. AFTER REQUIRED SITE GRADING CUTS ARE MADE, FURTHER EXCAVATE EXPOSED SILT, SANDY SILT, AND CLAYEY SILT OR OTHER COHESIVE SOIL WITHIN THE STRUCTURAL AREAS IN ACCORDANCE WITH SPECIFICATION 31 00 00 EARTHWORK.

   c. AFTER THE SITE STRIPPING AND REQUIRED EXCAVATIONS ARE COMPLETED, INCLUDING THE ABOVE ADDITIONAL EXCAVATIONS, LIGHTLY SCARIFY THE FINAL EXPOSED SURFACES IN ACCORDANCE WITH SPECIFICATION 31 00 00 EARTHWORK.

   d. AFTER STRIPPING AND EXCAVATING TO THE SUBGRADE LEVEL, PROOF ROLL THE BUILDING AND PAVEMENT AREAS IN ACCORDANCE WITH 31 00 00 EARTHWORK. PERFORM PROOF ROLLING AND UNDERCUTTING ACTIVITIES DURING A PERIOD OF DRY WEATHER WITH OBSERVATION AND DOCUMENTATION PERFORMED BY THE GEOTECHNICAL ENGINEER OR DESIGNATED REPRESENTATIVE.

   e. IF THEY ARE FOUND DURING THE ADDITIONAL EXCAVATION AND RE-COMPACTION, EXCAVATE SOFT, LOOSE, OR YIELDING SOILS ENTIRELY OR TO AN ADDITIONAL DEPTH OF 3 FEET, WHICHEVER IS LESS, AND BACKFILL WITH THE NON-EXPANSIVE, LIMESTONE SAND/GRAVEL SOIL OR SUB=BASE IN 8 INCH LOOSE LAYERS, MOISTURE CONDITION AND COMPACT TO ACHIEVE 95 PERCENT MDD FOR THE FIRST LAYER AND 100 PERCENT MDD OF THE REMAINING BACKFILL. ENTIRELY REMOVE COHESIVE SOIL AND REPLACE WITH A LIMESTONE SAND/GRAVEL MATERIAL.

   f. IN THE EVENT THE FINAL EXPOSED SURFACE IS STILL SOFT OR WET AND REGULAR COMPACTED BACKFILL CANNOT ACHIEVE AT LEAST 100 PERCENT OF ITS MDD, USE CRUSHED LIMESTONE GRAVEL SUCH AS 1- OR 2-INCH MAXIMUM SIZE CONCRETE COARSE AGGREGATE AS THE FIRST LAYER OF BACKFILL, SPREAD UNIFORMLY WITHOUT SEGREGATION, MOISTURE CONDITION AND COMPACT TO A DENSE AND RELATIVELY UNYIELDING STATE, SUFFICIENT TO RECEIVE REGULAR COMPACTED LIMESTONE SAND/GRAVEL BACKFILL 8-INCH LOOSE LAYERS, MOISTURE CONDITIONED AND COMPACTED TO AT LEAST 100 PERCENT OF ITS MDD WITH DENSE AND UNYIELDING SURFACE.

6. FILL AND BACKFILL

   a. PROVIDE FILL AND BACKFILL MATERIALS THAT ARE FREE OF ORGANIC MATTER AND ROCK FRAGMENTS OR LUMPS LARGER THAN 3 INCHES IN ANY DIMENSION AND CONFORM TO SPECIFICATION 31 00 00 UNLESS SPECIFICALLY NOTED IN THE DRAWINGS.

   b. PLACE APPROVED FILL AND BACKFILL SOILS IN 8 INCH MAXIMUM LOOSE LAYERS, MOISTURE CONDITION AND COMPACT TO AT LEAST 100 PERCENT OF THE MDD OF THE SOIL BEING COMPACTED, WITH A UNIFORM, DENSE AND UNYIELDING SURFACE. COMPACT FILL IN NON-LOAD-BEARING AREAS, SUCH AS UTILITY TRENCHES AT LEAST 5 FEET AWAY FROM STRUCTURES (INCLUDING PAVEMENTS), AND IN LANDSCAPING AREAS, TO 90 PERCENT MDD OF THE SOIL BEING COMPACTED.

P. SLABS ON-GRADE

PRIOR TO STEEL AND CONCRETE PLACEMENT, PROOF-ROLL THE PREPARED SUB-GRADES. UNDERCUT AND REPLACE SOILS THAT ARE OBSERVED TO RUT OR DEFLECT EXCESSIVELY (TYPICALLY GREATER THAN 1-INCH) UNDER THE MOVING LOAD WITH COMPACTED FILL AS DESCRIBED IN NOTE K. SOILS CONSTRUCTED IN THIS MANNER WILL HAVE SUBGRADE MODULUS OF 175.

Q. PROBING AND GROUTING: PERFORM PROBING AND GROUTING IN ACCORDANCE WITH SPECIFICATION SECTION 31 32 23.

FOUNDATION NOTES CONT

R. LATERAL DESIGN PARAMETERS.

   a. LATERAL EARTH PRESSURES:

BACKFILL MATERIALS	EFFECTIVE FRICTION ANGLE	EST. UNIT WEIGHT	EARTH PRESSURE COEFFICIENTS			FRICTION COEFFICIENT
			AT-REST Ko	ACTIVE Ka	PASSIVE Kp	
ON-SITE SOILS	35°	125 PCF	0.42	0.27	3.69	0.46
WELL-GRADED STONE[2]	35°	135 PCF	0.42	0.27	3.69	0.46
FREE-DRAINING CRUSHED STONE[2] (1-INCH-CLEAN)	32°	115 PCF	0.47	0.31	3.25	0.42

NOTES:
1. ONLY USE IN-SITU SOIL VALUES WHERE WALLS ARE "BANK POURED" AND WILL BE IN DIRECT CONTACT WITH UNMODIFIED MATERIALS.

2. VALUES PRESENTED ARE BASED ON DURABLE, ANGULAR CRUSHED AGGREGATE.

   b. EQUIVALENT FLUID PRESSURES.

BACKFILL MATERIALS	FULLY DRAINED[1]			SATURATED[2]		
	AT-REST	ACTIVE	PASSIVE[3]	AT-REST	ACTIVE	PASSIVE[3]
ON-SITE SOILS	53	33	230	91	81	186
WELL-GRADED STONE	57	36	249	93	82	196
FREE-DRAINING CRUSHED STONE (1-INCH-CLEAN)	54	35	186	87	79	148

NOTES:
1. THE PROVIDED FLUID PRESSURES ARE BASED ON MATERIAL NOT BEING ALLOWED TO BECOME SATURATED. PROVIDE DRAINAGE IF THESE VALUES ARE SELECTED.

2. IF THE MATERIALS ARE PERMITTED TO SATURATE, USE THESE MODIFIED VALUES TO ACCOUNT FOR THE HYDROSTATIC LOAD ON THE WALL/FOOTING.

3. DUE TO THE LARGE STRAINS REQUIRED TO FULLY MOBILIZE THE PASSIVE EARTH PRESSURE, A FACTOR OF SAFETY OF 2 HAS BEEN APPLIED TO THE RECOMMENDED PASSIVE FLUID PRESSURE. IF THIS VALUE IS CONSIDERED A DRIVING PRESSURE DOUBLE THE FLUID PRESSURES USED.

FIELD INSTALLED EXPANSION OR EPOXY ANCHOR NOTES

A. INSTALL ANCHORS IN ACCORDANCE WITH CURRENT ICC-ES REPORT FOR THE ANCHOR AND RECOMMENDATIONS OF THE MANUFACTURER.

B. INSTALL ANCHORS PERPENDICULAR TO THE FACE OF CONCRETE. DEVIATION FROM PERPENDICULAR GREATER THAN 10 DEGREES WILL NOT BE ACCEPTABLE.

C. CREATE A TEMPLATE AT EACH ANCHOR CONNECTION LOCATION PRIOR TO FABRICATING HOLES IN CONNECTION PLATES. MAKE TEMPLATE BY LOCATING EXISTING REBAR WITH A PACHOMETER. REPOSITION BOLTS A MAXIMUM OF 1-1/2 INCHES TO AVOID CONFLICTS WITH EXISTING REINFORCING.

D. DRILL HOLES TO DEPTH AND DIAMETER RECOMMENDED BY MANUFACTURER. DO NOT ENLARGE OR REDIRECT HOLES ALONG LENGTH OF ANCHOR.

E. DRILL HOLES IN CONTINUOUS OPERATION. BLOW DUST FROM THE HOLE USING COMPRESSED AIR, OR USING MANUFACTURER'S APPROVED METHOD OF HOLE CLEANING FOR THE ANCHOR USED.

F. FILL ABANDONED HOLES WITH EPOXY GROUT.

G. PROVIDE HOLES IN CONNECTION PLATES NO MORE THAN 1/16 INCH LARGER THAN THE ANCHOR DIAMETER.

SPECIAL INSPECTIONS NOTES

A. GENERAL:

PROVIDE STRUCTURAL TESTS AND SPECIAL INSPECTIONS IN ACCORDANCE WITH CHAPTER 17 OF THE 2024 INTERNATIONAL BUILDING CODES AND THE PROJECT SPECIFICATIONS, INCLUDING SECTION 01 45 35 AND THE STATEMENT AND SCHEDULE OF SPECIAL INSPECTIONS.

SYM	DESCRIPTION	DATE

NAVFAC

STATE OF TEXAS
ALEX BANNEROT
91686
LICENSED PROFESSIONAL ENGINEER
01/20/26
TEXAS REGISTERED ENGINEERING FIRM F-2966 SEAL

Jacobs / BURNS McDONNELL
JACOBS/B&M, A JOINT VENTURE
1100 NORTH GLEBE ROAD
SUITE 500
ARLINGTON, VA 22201
A/E Contract No. N62470-20-D-0002
A/E Task Order No. N62742-19-1015
JKO NO. 2DA0063 A/E INFO

APPROVED
FOR COMMANDER NAVFAC DATE 02/02/2026

ACTIVITY
AFIMSC APPROVAL PER NAVFAC SAT-TO CHECKLIST

SATISFACTORY TO DATE 31 DEC 2025

DES:	AB	DRW:	DO	REV:	AS

PM/DM	KKK
BRANCH MANAGER	SMK
CHIEF ENG/ARCH	SMK
FIRE PROTECTION	RO

DEPARTMENT OF THE NAVY
NAVAL FACILITIES ENGINEERING SYSTEMS COMMAND
NAVFAC PACIFIC
ANDERSEN AIR FORCE BASE
NAVAL FACILITIES ENGINEERING SYSTEMS COMMAND – PACIFIC
JOINT REGION MARIANAS (JRM)
GUAM

FY24 AJJY183012 (P-012)
PDI: NORTH AIRCRAFT PARKING RAMP

STRUCTURAL GENERAL NOTES

SCALE: AS SHOWN
EPROJECTS NO.: 1665555
CONSTR CONTROL NO.

NAVFAC DRAWING NO.
17361878

SHEET 255 OF 377

S-002

REDESIGN FINAL SUBMITTAL

IF SHEET IS LESS THAN 22" X 34"
REDUCED PRINT. USE GRAPHIC SCALES

FILE NAME: C:\Users\yorfondp\Documents\P012-1665555-S-3D_dove60.rvt
LAYOUT NAME: STRUCTURAL GENERAL NOTES
PLOTTED: 1/16/2026 6:32:54 AM
USER: DO

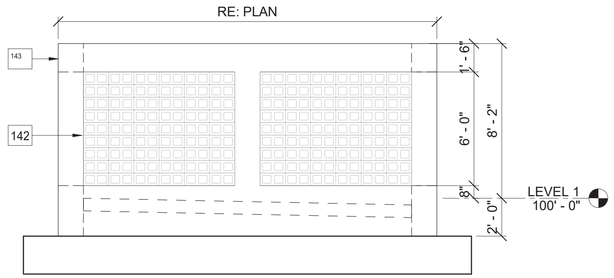

D1 EQUIPMENT YARD SIDE ELEVATION

SCALE 1/4" = 1'-0"

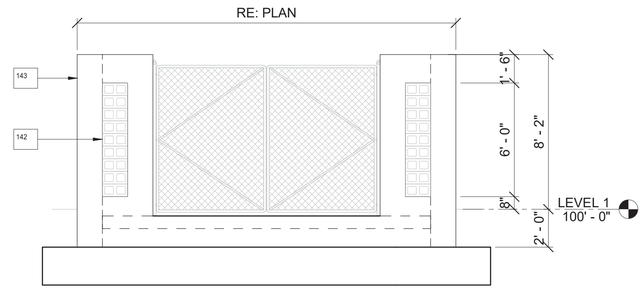

D3 EQUIPMENT YARD FRONT ELEVATION

SCALE 1/4" = 1'-0"

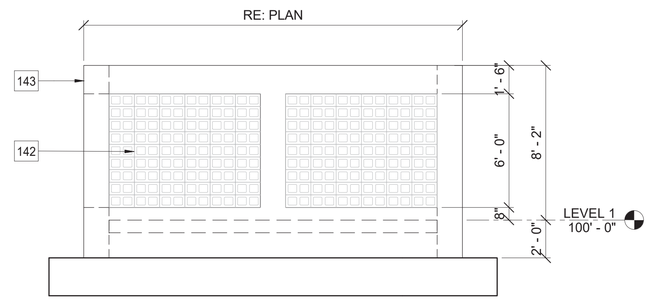

C3 EQUIPMENT YARD BACK ELEVATION

SCALE 1/4" = 1'-0"

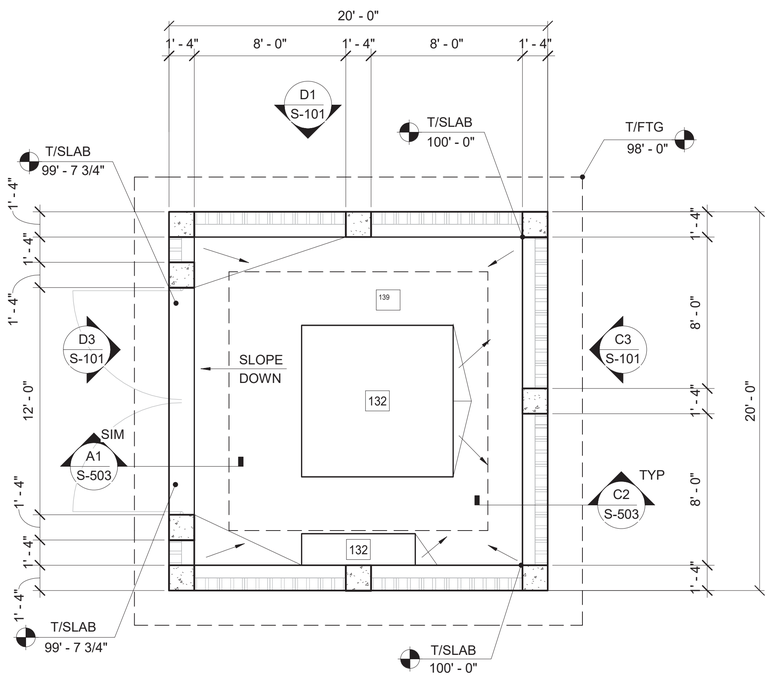

NOTES:
1. REFER TO CIVIL FOR LOCATION, ORIENTATION AND REFERENCE DATUM OF EQUIPMENT YARD

A1 EQUIPMENT YARD - FOUNDATION PLAN

SCALE 1/4" = 1'-0"

GENERAL NOTES - FOUNDATION PLAN

A	COORDINATE WITH CIVIL FOR EQUIPMENT YARD REFERENCE DATUM.
B	REFER TO SHEETS S-001 THROUGH S-002 FOR STRUCTURAL GENERAL NOTES.
C	REFER TO SHEETS S-501 THROUGH S-503 TYPICAL CONCRETE DETAILS.
D	REFER TO ARCHITECTURAL, MECHANICAL, & PLUMBING SHEETS FOR OPENINGS.
E	CENTER FOOTINGS UNDER WALL CENTER LINES UNLESS OTHERWISE NOTED
F	COORDINATE DOOR OPENING LOCATIONS WITH ARCHITECTURAL DRAWINGS.
G	CJ - DENOTES CONTROL/CONSTRUCTION JOINTS RE: C1/S-502.
H	COORDINATE BOLLARD LOCATIONS WITH ARCHITECTURAL DRAWINGS. RE: A2/S-501 FOR BOLLARD DETAIL.

KEYNOTES

132	CONCRETE EQUIPMENT PAD RE: A3/S-501
139	8" THICK CONCRETE SLAB ON GRADE REINFORCED WITH #4 @ 12" ON CENTER, EACH WAY AT MID-DEPTH OF SLAB, OVER 10" AGGREGATE BASE OVER PREPARED SUBGRADE.
142	SIDE TURNED CMU BREEZEBLOCK
143	CAST IN PLACE CONCRETE WALL WITH FLUID APPLIED SILICONE ELASTOMERIC COATING, RE: ARCH

SYM	DESCRIPTION	DATE

STATE OF TEXAS
ALEX BANNEROT
91686
LICENSED PROFESSIONAL ENGINEER
01/27/26
TEXAS REGISTERED ENGINEERING FIRM F-2966 SEAL

Jacobs / BURNS McDONNELL

JACOBS/B&M, A JOINT VENTURE
1100 NORTH GLEBE ROAD
SUITE 500
ARLINGTON, VA 22201
A/E Contract No. N62470-20-D-0002
A/E Task Order No. N62742-FF-0015
JKO NO. 2DA02803 A/E INFO

APPROVED
FOR COMMANDER NAVFAC DATE 02/02/2026

ACTIVITY
AFIMSC APPROVAL PER NAVFAC SAT-TO CHECKLIST

SATISFACTORY TO DATE 31 DEC 2025

DES:	AB	DRW:	DO	REV:	AS
PM/DM					KKK
BRANCH MANAGER					SMK
CHIEF ENG/ARCH					SMK
FIRE PROTECTION					RO

DEPARTMENT OF THE NAVY
NAVAL FACILITIES ENGINEERING SYSTEMS COMMAND
NAVFAC PACIFIC
NAVAL FACILITIES ENGINEERING SYSTEMS COMMAND – PACIFIC
JOINT REGION MARIANAS (JRM)
ANDERSEN AIR FORCE BASE
GUAM

FY24 AUJY183012 (P-012),
PDI: NORTH AIRCRAFT PARKING RAMP

FOUNDATION PLANS

SCALE: AS SHOWN
EPROJECTS NO.: 1665555
CONSTR CONTROL NO.
NAVFAC DRAWING NO. 17361879
SHEET 256 OF 377

S-101

REDESIGN FINAL SUBMITTAL

GRAPHIC SCALE
4 3 2 1 0 4 8
SCALE: 1/4"=1'-0"

NORTH ARROW
TRUE N

IF SHEET IS LESS THAN 22" X 34"
REDUCED PRINT. USE GRAPHIC SCALES

FILE NAME: C:\Users\orfondp\Documents\P012-1665555-S-3D_dove60.rvt
LAYOUT NAME: FOUNDATION PLANS
PLOTTED: 1/27/2026 7:27:52 AM
USER: DO

DEVELOPMENT LENGTH (L_{dh}) FOR UNCOATED HOOKED DEFORMED BARS IN TENSION (in)

BAR SIZE	GRADE 60 ksi			
	f'c (psi)			
	4000	5000	6000	8000
#3	7	7	7	6
#4	11	11	10	9
#5	15	15	14	13
#6	20	19	19	16
#7	25	24	24	20
#8	30	29	29	25
#9	36	35	34	30
#10	43	42	41	35
#11	51	49	48	41
#14	66	64	63	54
#18	102	98	96	83

NOTES:

1. REINFORCING SPACING IS AT LEAST 3 BAR DIAMETERS AND LESS THAN 6 BAR DIAMETERS ON CENTER FOR DEVELOPMENT LENGTHS SHOWN. IF REINFORCING SPACING IS GREATER THAN 6 BAR DIAMETERS, DECREASE DEVELOPMENT LENGTH BY A FACTOR OF 0.625 ROUNDED TO THE NEAREST INCH. DO NOT USE HOOK REINFORCING WHERE SPACING IS LESS THAN 3 BAR DIAMETERS ON CENTER.

LAP SPLICE LENGTH (Lst) - REINFORCING STEEL STRENGTH, Fy) - = 60ksi (1,2,4,5,6,7)

BAR SIZE	C-C (8) SPACING (in)	f'c= 5000 psi				
		COVER (in)				
		0.75	1.5	2	2.5	3
#3	2≤s<4	13	13	13	13	13
	4≤s<6	13	13	13	13	13
	6≤s	13	13	13	13	13
#4	2≤s<4	22	22	22	22	22
	4≤s<6	22	18	18	18	18
	6≤s	22	18	18	18	18
#5	2≤s<4	34	34	34	34	34
	4≤s<6	32	22	22	22	22
	6≤s	32	22	22	22	22
#6	2≤s<4	49	49	49	49	49
	4≤s<6	44	26	26	26	26
	6≤s	44	26	26	26	26
#7	2≤s<4	83	83	83	83	83
	4≤s<6	70	43	42	42	42
	6≤s	70	43	38	38	38
#8	2≤s<4	108	108	108	108	108
	4≤s<6	87	54	54	54	54
	6≤s	87	54	44	44	44
#9	2≤s<4	137	137	137	137	137
	4≤s<6	105	69	69	69	69
	6≤s	105	67	54	49	49
#10	2≤s<4	174	174	174	174	174
	4≤s<6	126	87	87	87	87
	6≤s	126	82	66	58	58
#11	2≤s<4	214	214	214	214	214
	4≤s<6	147	107	107	107	107
	6≤s	147	97	80	72	72

NOTES:

1. LAP SPLICE AND DEVELOPMENT LENGTHS SHOWN IN SCHEDULES ARE IN INCHES.
2. REINFORCING BARS ARE VERTICAL REINFORCING, HORIZONTAL REINFORCING, OR DIAGONAL REINFORCING WITH ANGLE GREATER THAN 45 DEGREES TO HORIZONTAL WITH MORE 12 INCHES OF CONCRETE CAST BELOW THE BARS. STANDARD HOOKS WITH SIDE COVER (NORMAL TO PLANE OF HOOK) ≥ 2.5" AND COVER ON BAR EXTENSION BEYOND HOOK ≥ 2".
3. DEVELOPMENT LENGTH SHOWN IS BASED ON 2" CONCRETE COVER. FOR REINFORCING WITH A DIFFERENT CONCRETE COVER, DETERMINE SPLICE LENGTH BY DECREASING LAP SPLICE LENGTH BY A FACTOR OF 0.77 ROUNDED UP TO THE NEAREST INCH. MINIMUM LAP SPLICE LENGTH = 12".
4. WHERE LESS THAN 12" OF FRESH CONCRETE IS PLACED BELOW HORIZONTAL REINFORCEMENT, DECREASE LAP SPLICE LENGTHS IN TABLE BY A FACTOR OF 0.77 ROUNDED UP TO THE NEAREST INCH. MINIMUM LAP SPLICE LENGTH = 12".
5. UNLESS NOTED OTHERWISE, LAP SPLICES IN CONCRETE BEAMS, SLABS, AND WALLS MUST BE TENSION LAP SPLICES. LAP SPLICES IN COLUMNS MUST BE TENSION LAP SPLICES. UNLESS NOTED OTHERWISE, TENSION LAP SPLICES MUST BE CLASS-B.
6. LAP SPLICES FOR BARS LARGER THAN No. 11 ARE NOT PERMITTED. PROVIDE MECHANICAL COUPLER IN ACCORDANCE WITH SPECIFICATION SECTION 03 30 00 CAST-IN-PLACE CONCRETE FOR #14 AND #18 REINFORCING BARS.
7. IF BARS OF DIFFERENT SIZES ARE LAP SPLICED, SPLICE LENGTH MUST BE THE LARGER L_d OF THE LARGER BAR OR L_{st} OF THE SMALLER BAR.
8. C-C INDICATES CENTER-TO-CENTER.

TENSION BAR DEVELOPMENT LENGTH (Ld) - REINFORCING STEEL STRENGTH, Fy = 60 ksi (1,2,3)

BAR SIZE	C-C (8) SPACING (in)	f'_c (psi)
		5000
#3	2≤s<4	12
	4≤s<6	12
	6≤s	12
#4	2≤s<4	17
	4≤s<6	14
	6≤s	14
#5	2≤s<4	26
	4≤s<6	17
	6≤s	17
#6	2≤s<4	38
	4≤s<6	20
	6≤s	20
#7	2≤s<4	64
	4≤s<6	32
	6≤s	29
#8	2≤s<4	83
	4≤s<6	42
	6≤s	34
#9	2≤s<4	106
	4≤s<6	53
	6≤s	42
#10	2≤s<4	134
	4≤s<6	67
	6≤s	51
#11	2≤s<4	165
	4≤s<6	83
	6≤s	61
#14	2≤s<4	238
	4≤s<6	119
	6≤s	84
#18	2≤s<4	422
	4≤s<6	211
	6≤s	141

C1 TYPICAL DEVELOPMENT (EMBEDMENT) LENGTH FOR STANDARD END HOOKS

SCALE NTS

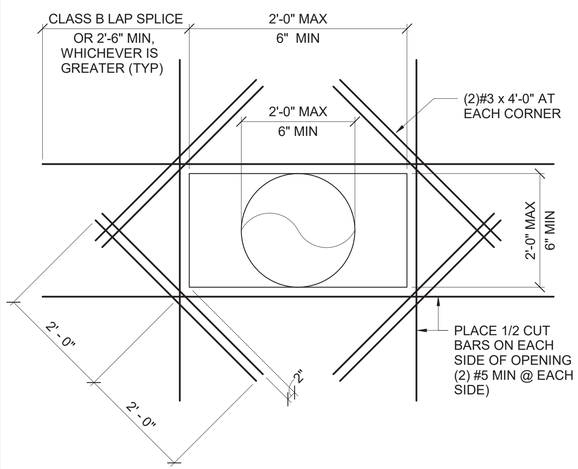

B1 TYPICAL PENETRATIONS IN SLAB-ON-GRADE OR WALL

SCALE NTS

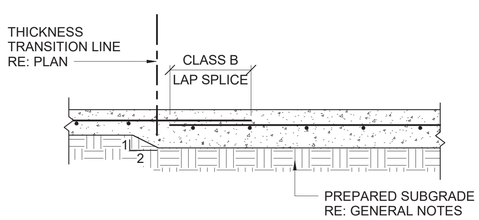

A1 TYPICAL SLAB ON GRADE THICKNESS TRANSITION

SCALE NTS

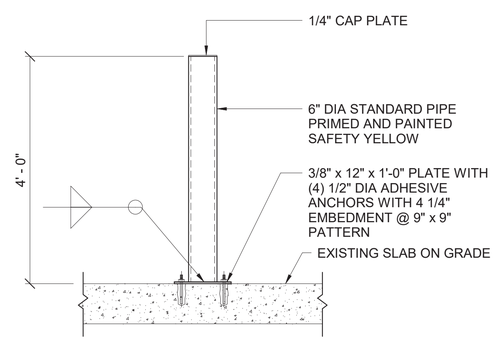

A2 TYPICAL INTERIOR BOLLARD DETAIL

SCALE NTS

C3 TENSION DEVELOPMENT LENGTH

SCALE NTS

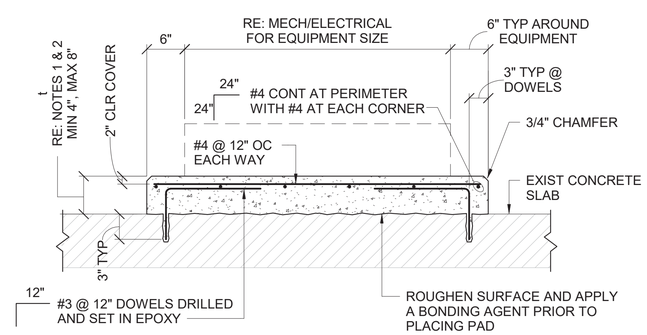

NOTES:

1. CONFIRM REQUIRED SIZE AND LOCATION OF HOUSEKEEPING PADS WITH EQUIPMENT MANUFACTURER'S PRIOR TO PLACEMENT OF CONCRETE. PROVIDE PADS, WHETHER SHOWN ON STRUCTURAL DRAWINGS OR NOT.
2. WHERE REQUIRED, COORDINATE HOUSEKEEPING PAD WITH ARCHITECTURAL, MECHANICAL, PLUMBING AND FIRE PROTECTION SO PENETRATIONS ARE PLACED BEFORE CONCRETE IS POURED.

A3 SECTION AT HOUSEKEEPING PAD

SCALE NTS

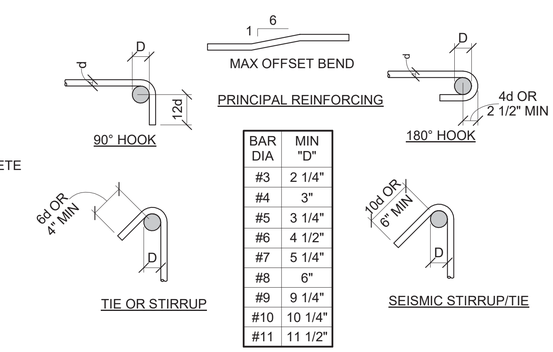

BAR DIA	MIN "D"
#3	2 1/4"
#4	3"
#5	3 1/4"
#6	4 1/2"
#7	5 1/4"
#8	6"
#9	9 1/4"
#10	10 1/4"
#11	11 1/2"

DETAIL NOTES:

1. MALE BENDS COLD.
2. BEND-TEST AND APPROVE #14 AND #18 BARS PRIOR TO BENDING.
3. FOR "D" ETC SEE CRSI HANDBOOK GOVERNING EDITION.

A4 BAR BENDS

SCALE NTS

SYM	DESCRIPTION	DATE

NAVFAC

STATE OF TEXAS
ALEX BANNEROT
91686
LICENSED PROFESSIONAL ENGINEER
01/20/26
TEXAS REGISTERED ENGINEERING FIRM F-2966 SEAL

Jacobs / BURNS McDONNELL
JACOBS/B&M, A JOINT VENTURE
1100 NORTH GLEBE ROAD
SUITE 500
ARLINGTON, VA 22201
A/E Contract No. N62470-20-D-0802
A/E Task Order No. N62742-FF-0315
JKO NO. 204A0803 A/E INFO

APPROVED
FOR COMMANDER NAVFAC DATE 02/02/2026

ACTIVITY
AF/MSC APPROVAL PER NAVFAC SAT-TO CHECKLIST

SATISFACTORY TO DATE 31 DEC 2025

DES:	AB	DRW: DO	REV: AS
PM/DM			KKK
BRANCH MANAGER			SMK
CHIEF ENG/ARCH			SMK
FIRE PROTECTION			RO

DEPARTMENT OF THE NAVY
NAVAL FACILITIES ENGINEERING SYSTEMS COMMAND
NAVFAC PACIFIC
NAVAL FACILITIES ENGINEERING SYSTEMS COMMAND ~ PACIFIC
JOINT REGION MARIANAS (JRM)
ANDERSEN AIR FORCE BASE
GUAM

FY24 AJJY183012 (P-012),
PDI: NORTH AIRCRAFT PARKING RAMP

TYPICAL CONCRETE DETAILS

SCALE: AS SHOWN
EPROJECTS NO.: 1665555
CONSTR CONTROL NO.
NAVFAC DRAWING NO. 17361880
SHEET 257 OF 377

S-501

REDESIGN FINAL SUBMITTAL

FILE NAME: C:\Users\ortondp\Documents\P012-1665555-S-3D_dove60.rvt
LAYOUT NAME: TYPICAL CONCRETE DETAILS
PLOTTED: 1/16/2026 6:32:54 AM
USER: DO

IF SHEET IS LESS THAN 22" X 34" REDUCED PRINT. USE GRAPHIC SCALES

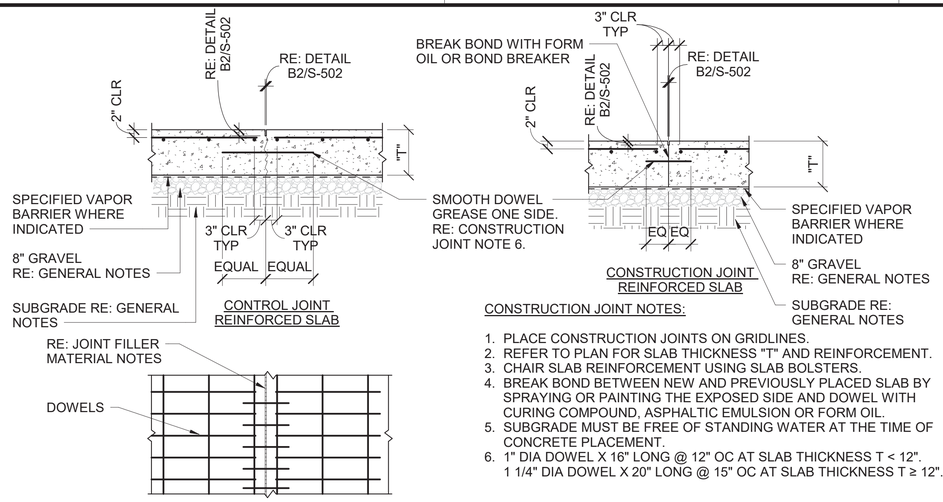

CONSTRUCTION JOINT NOTES:

1. PLACE CONSTRUCTION JOINTS ON GRIDLINES.
2. REFER TO PLAN FOR SLAB THICKNESS "T" AND REINFORCEMENT.
3. CHAIR SLAB REINFORCEMENT USING SLAB BOLSTERS.
4. BREAK BOND BETWEEN NEW AND PREVIOUSLY PLACED SLAB BY SPRAYING OR PAINTING THE EXPOSED SIDE AND DOWEL WITH CURING COMPOUND, ASPHALTIC EMULSION OR FORM OIL.
5. SUBGRADE MUST BE FREE OF STANDING WATER AT THE TIME OF CONCRETE PLACEMENT.
6. 1" DIA DOWEL X 16" LONG @ 12" OC AT SLAB THICKNESS T < 12". 1 1/4" DIA DOWEL X 20" LONG @ 15" OC AT SLAB THICKNESS T ≥ 12".

SAWED CONTROL JOINT NOTES:

1. MAKE SAWCUT AS SOON AS SLAB IS ABLE TO SUPPORT THE WEIGHT OF WORKERS AND SAWING EQUIPMENT WITHOUT DAMAGE TO FINISH SURFACE OF SLAB. COMPLETE SAWED JOINTS WITHIN 24 HOURS OF SLAB PLACEMENT.
2. CLEAN JOINT PRIOR TO FILLING JOINT.

DOWEL NOTES:

1. PROVIDE DOWEL MATERIAL IN ACCORDANCE WITH SPECIFICATIONS.
2. ALIGN AND SUPPORT DOWELS DURING CONCRETING OPERATIONS. MAINTAIN DOWEL ALIGNMENT DURING FINISHING AND CURING OPERATIONS TO PREVENT DAMAGE TO SLAB.

JOINT SEALANT MATERIAL NOTES:

1. PROVIDE SEALANT MATERIAL WITH A MINIMUM SHORE HARDNESS OF 35, AND IN ACCORDANCE WITH SPECIFICATIONS. CONTRACTING OFFICER TO APPROVE JOINT FILLER MATERIAL PRIOR TO APPLICATION.
2. APPLY SEALANT MATERIAL WHEN BUILDING IS UNDER PERMANENT TEMPERATURE CONTROL. THIS MUST BE EITHER AT THE END OF CONSTRUCTION OF THE COMPLETE BUILDING SHELL, OR AT MINIMUM OF 90 DAYS AFTER SLAB CONSTRUCTION.

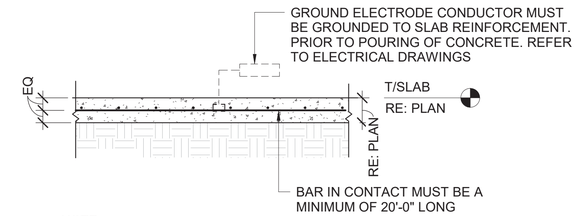

NOTE:
1. COORDINATE WITH ELECTRICAL DRAWINGS FOR LOCATION.

C4 TYPICAL ELECTRICAL GROUND DETAIL

SCALE NTS

C1 TYPICAL CONSTRUCTION / CONTROL JOINT AT SLAB-ON-GRADE DETAIL

SCALE NTS

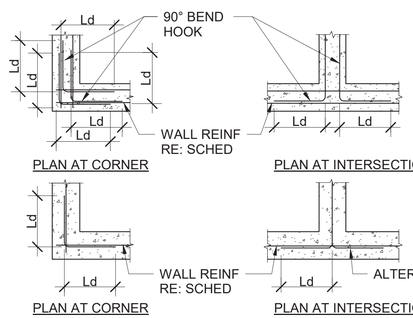

NOTE:
1. CORNER BARS MUST MATCH SIZE AND SPACING OF HORIZONTAL WALL REINFORCEMENT.

B1 TYPICAL CORNER BAR PLACEMENT DETAIL

SCALE NTS

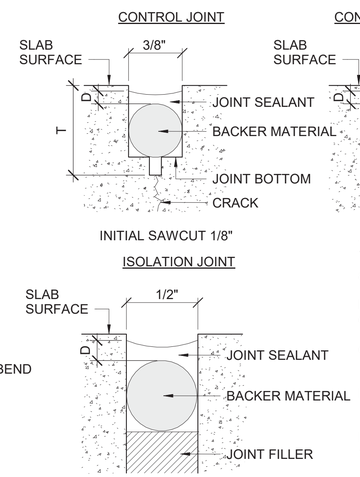

T = DEPTH OF INITIAL SAWCUT

a. 1/4 SLAB THICKNESS ±1/2" FOR SLAB LESS THAN 12".
b. 3" FOR SLABS 12" - 18".
c. 1/6 SLAB THICKNESS FOR SLABS MORE THAN 18".
d. DIAMETER OF BACKER MATERIAL = JOINT WIDTH + 1/8".

D = DEPTH OF SEALANT AS REQUIRED BY SEALANT MANUFACTURER.

NOTE: TOP OF SEALANT MUST BE 1/4" TO 1/8" BELOW TOP OF SLAB

B2 JOINT SEALANT DETAIL FOR CONCRETE SLAB ON GROUND

SCALE NTS

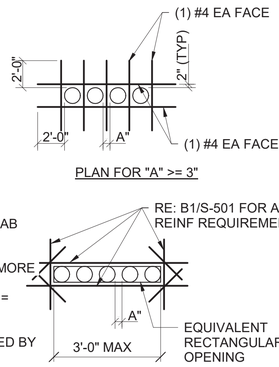

NOTES:

1. WHERE CLEAR SPACING BETWEEN ADJACENT SLEEVES IS LESS THAN 3", TREAT THE SLEEVE GROUP AS AN EQUIVALENT RECTANGULAR OPENING.
2. WHERE CLEAR SPACING BETWEEN ADJACENT SLEEVES IS GREATER THAN 3", OFFSET SCHEDULED BAR REINFORCEMENT TO MISS SLEEVES.
3. REINFORCEMENT SHOWN IS ADDITIONAL TO TYPICAL SLAB REINFORCEMENT.
4. REFER TO MECHANICAL/FIRE PROTECTION DRAWINGS FOR LOCATION AND SIZE OF SLEEVES.
5. ISOLATED PIPE SLEEVES THAT ARE SMALLER THAN 5" AND DO NOT INTERRUPT REINFORCING DO NOT REQUIRE THE USE OF THIS DETAIL.
6. DO NOT USE THIS DETAIL FOR OPENING GROUPS WITH DIAMETERS LARGER THAN 12". CONSULT ENGINEER FOR FRAMING OF SUCH CONDITIONS.

B3 TYPICAL ADDITIONAL REINFORCEMENT AT SLABS AND WALLS AROUND PIPE SLEEVES

SCALE NTS

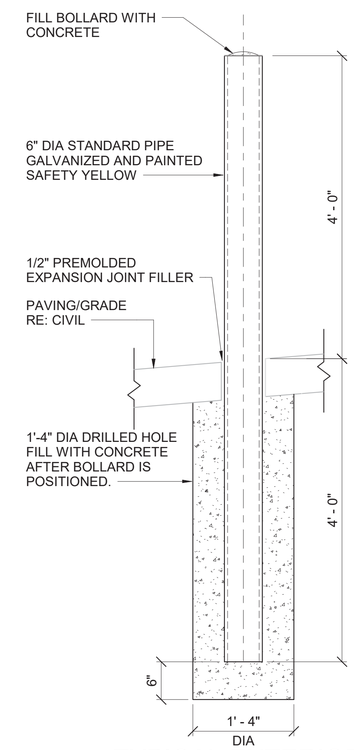

A4 TYPICAL EXTERIOR BOLLARD DETAIL

SCALE NTS

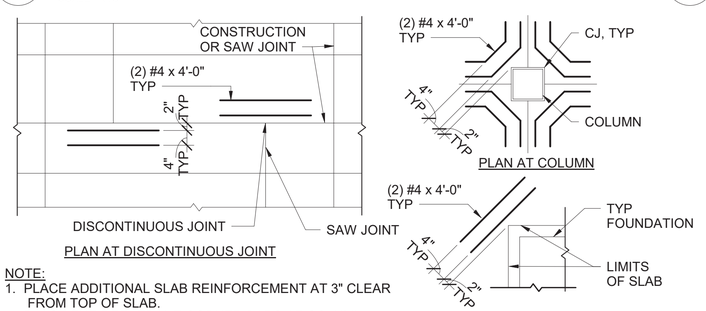

NOTE:
1. PLACE ADDITIONAL SLAB REINFORCEMENT AT 3" CLEAR FROM TOP OF SLAB.
2. PLACE THE REENTRANT CORNER BARS AT COLUMN LOCATIONS AS INDICATED ON PLAN.

A1 TYPICAL ADDITIONAL SLAB-ON-GRADE REINFORCING

SCALE NTS

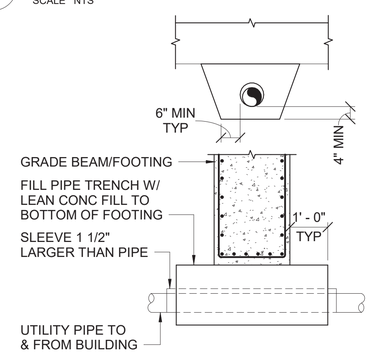

A2 TYPICAL UTILITY PIPES UNDER GRADE BEAM/FOOTING

SCALE NTS

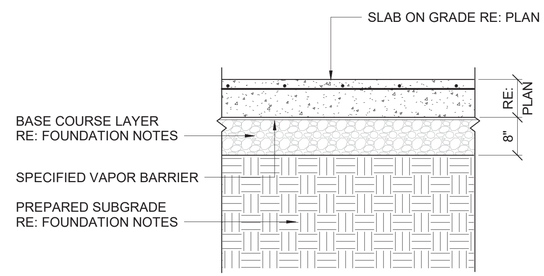

NOTE: BASE COURSE MATERIAL MUST MEET BASE COURSE REQUIREMENTS AS DEFINED IN THE SPECIFICATIONS AND GEOTECHNICAL REPORT.

A3 TYPICAL REINFORCED SLAB ON GRADE SUBGRADE PREPARATION

SCALE NTS

SYM	DESCRIPTION	DATE

NAVFAC

STATE OF TEXAS
ALEX BANNEROT
91686
LICENSED PROFESSIONAL ENGINEER
01/20/26
TEXAS REGISTERED ENGINEERING FIRM F-2966 SEAL

Jacobs / BURNS McDONNELL
JACOBS/B&M, A JOINT VENTURE
1100 NORTH GLEBE ROAD
SUITE 500
ARLINGTON, VA 22201
A/E Contract No. N62470-20-D-0002
A/E Task Order No. N62742-19-1015
JKO NO. 204/2803 A/E INFO

APPROVED
FOR COMMANDER NAVFAC DATE 02/02/2026

ACTIVITY
AFIMSC APPROVAL PER NAVFAC SAT-TO CHECKLIST

SATISFACTORY TO DATE 31 DEC 2025

DES:	AB	DRW:	DO	REV:	AS
PM/DM	KKK				
BRANCH MANAGER	SMK				
CHIEF ENG/ARCH	SMK				
FIRE PROTECTION	RO				

DEPARTMENT OF THE NAVY
NAVAL FACILITIES ENGINEERING SYSTEMS COMMAND
NAVFAC PACIFIC
NAVAL FACILITIES ENGINEERING SYSTEMS COMMAND ~ PACIFIC
JOINT REGION MARIANAS (JRM)
ANDERSEN AIR FORCE BASE
GUAM

FY24 AJJY183012 (P-012).
PDI: NORTH AIRCRAFT PARKING RAMP

TYPICAL CONCRETE DETAILS

SCALE: AS SHOWN
EPROJECTS NO.: 1665555
CONSTR CONTROL NO.
NAVFAC DRAWING NO. 17361881
SHEET 258 OF 377
S-502

REDESIGN FINAL SUBMITTAL

IF SHEET IS LESS THAN 22" X 34" REDUCED PRINT. USE GRAPHIC SCALES

FILE NAME: C:\Users\orlondp\Documents\P012-1665555-S-3D_dave60.rvt
LAYOUT NAME: TYPICAL CONCRETE DETAILS
PLOTTED: 1/16/2026 6:32:54 AM
USER: DO

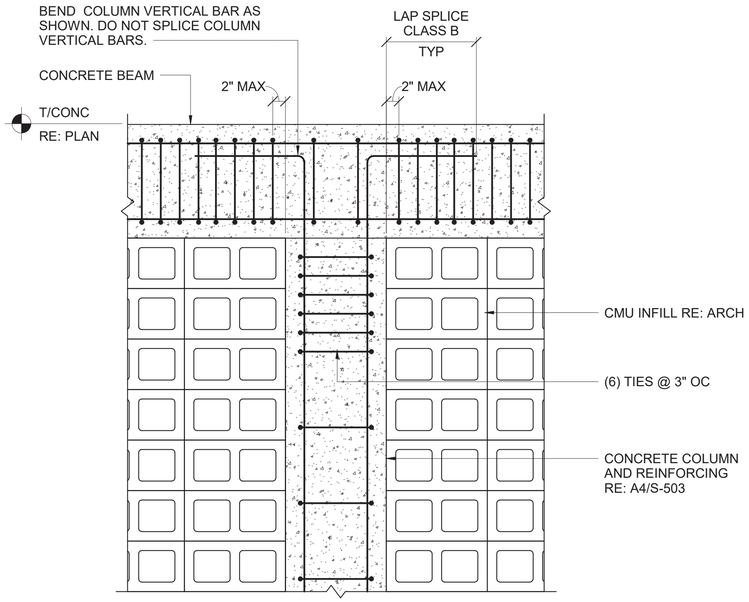

C1 SECTION

SCALE 1" = 1'-0"

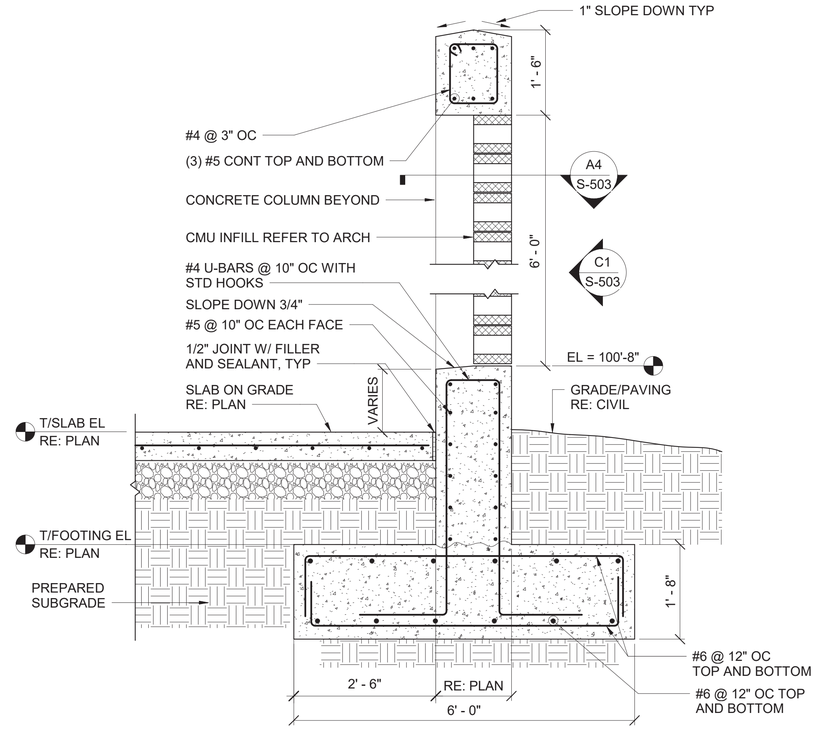

C2 SECTION AT PERIMETER

SCALE 3/4" = 1'-0"

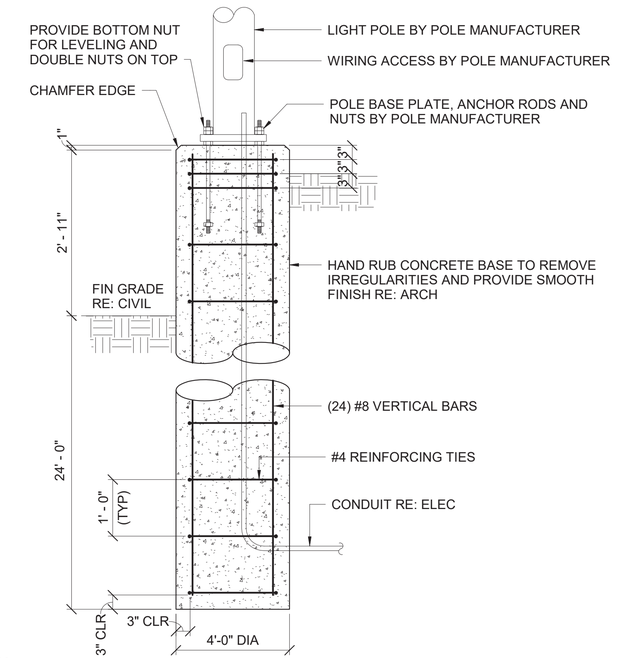

NOTE:

1. REFER TO ELECTRICAL DRAWINGS FOR INFORMATION NOT SHOWN.

C4 HIGH MAST LIGHTPOLE BASE DETAIL

SCALE NTS

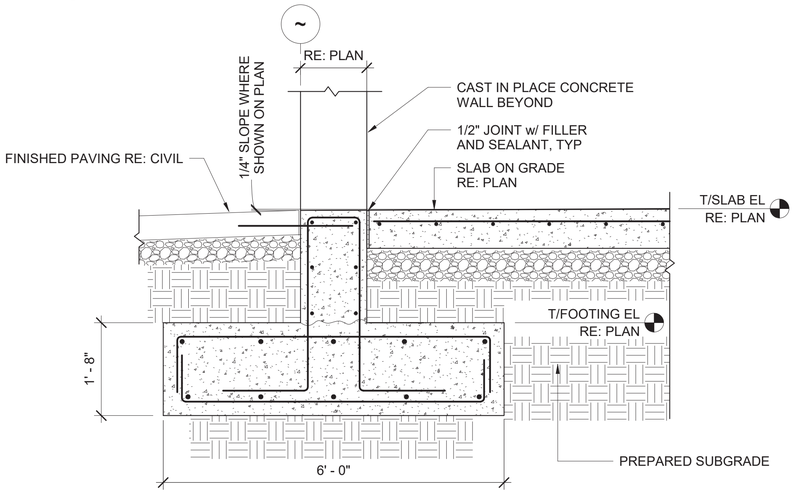

NOTE:

1. RE: C2/S-503 FOR ADDITIONAL INFORMATION.
2. RE: PLAN FOR ADDITIONAL INFORMATION AT SLOPED LOCATIONS.

A1 SECTION

SCALE 3/4" = 1'-0"

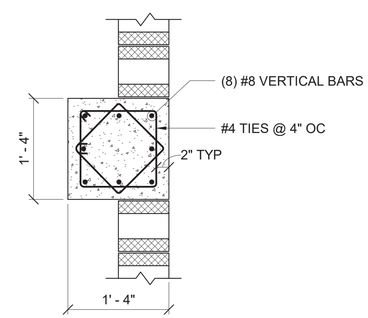

A4 COLUMN REINFORCING

SCALE 1" = 1'-0"

SCALE: 3/4"=1'-0"

SCALE: 1"=1'-0"

SYM	DESCRIPTION	DATE

NAVFAC

STATE OF TEXAS — ALEX BANNEROT — 91686 — LICENSED PROFESSIONAL ENGINEER — 01/20/26

TEXAS REGISTERED ENGINEERING FIRM F-2966 — SEAL

Jacobs / BURNS McDONNELL

JACOBS/B&M, A JOINT VENTURE
1100 NORTH GLEBE ROAD
SUITE 500
ARLINGTON, VA 22201

A/E Contract No. N62470-20-D-0002
A/E Task Order No. N62742-FF3015
JKO NO. 2DA03803 — A/E INFO

APPROVED — FOR COMMANDER NAVFAC DATE 02/02/2026

ACTIVITY: AFIMSC APPROVAL PER NAVFAC SAT-TO CHECKLIST

SATISFACTORY TO DATE 31 DEC 2025

DES:	AB	DRW:	DO	REV:	AS
PM/DM	KKK				
BRANCH MANAGER	SMK				
CHIEF ENG/ARCH	SMK				
FIRE PROTECTION	RO				

DEPARTMENT OF THE NAVY
NAVAL FACILITIES ENGINEERING SYSTEMS COMMAND
NAVFAC PACIFIC
NAVAL FACILITIES ENGINEERING SYSTEMS COMMAND – PACIFIC
JOINT REGION MARIANAS (JRM)
ANDERSEN AIR FORCE BASE
GUAM

FY24 AUJY183012 (P-012)
PDI: NORTH AIRCRAFT PARKING RAMP

CONCRETE SECTIONS AND DETAILS

SCALE: AS SHOWN
EPROJECTS NO.: 1665555
CONSTR CONTROL NO.
NAVFAC DRAWING NO. 17361882
SHEET 259 OF 377

S-503

REDESIGN FINAL SUBMITTAL

FILE NAME: C:\Users\ortondp\Documents\P012-1665555-S-3D_dave60.rvt
LAYOUT NAME: CONCRETE SECTIONS AND DETAILS
PLOTTED: 1/16/2026 6:32:59 AM
USER: DO

IF SHEET IS LESS THAN 22" X 34" REDUCED PRINT. USE GRAPHIC SCALES

PERSPECTIVE VIEWS

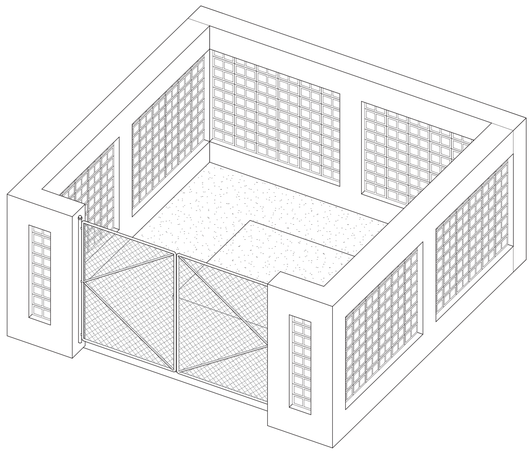

A1 PERSPECTIVE

SCALE NTS

GENERAL NOTES

A	VERIFY AND DOCUMENT CONDITIONS AND DIMENSIONS ON THE JOB.
B	DO NOT SCALE THE DRAWINGS FOR CONSTRUCTION PURPOSES.
C	VERIFY SIZE, LOCATION, AND CHARACTERISTICS OF EQUIPMENT WITH MANUFACTURERS AND SUPPLIERS BEFORE BEGINNING CONSTRUCTION.
D	FLOOR PLAN DIMENSIONS ARE TO FACE OF CONCRETE, UNLESS NOTED OTHERWISE
E	REFER TO MECHANICAL, PLUMBING, AND ELECTRICAL DRAWINGS FOR ADDITIONAL LOCATIONS OF PENETRATIONS OCCURING WITHIN FLOORS AND WALLS.
F	NOT USED
G	VERIFY SIZE AND LOCATION OF OPENINGS FOR EQUIPMENT AND RELATED WORK
H	REFER TO MECHANICAL, PLUMBING, AND ELECTRICAL DRAWINGS FOR LOCATIONS OF EQUIPMENT NOT SHOWN ON ARCHITECTURAL DRAWINGS
J	(EX-#) DESIGNATION REFERS TO EXTERIOR FINISH COLORS, REFER TO EXTERIOR FINISH SCHEDULE A-406
K	LEVEL 1 DATUM ELEVATION OF 100'-0" IS FOR CONSTRUCTION COORDINATION PURPOSES ONLY. REFER TO CIVIL FOR FINISH FLOOR ELEVATION

DRAWING SYMBOLS

104A	DOOR AND DOOR NUMBER
STORAGE 104	ROOM NAME AND NUMBER
L1	LOUVER NUMBER
W1	WINDOW TYPE
A3.1	PARTITION TYPE
1	REVISION

MATERIALS LEGEND

	CONCRETE/ PRECAST CONCRETE
	SAND, OR CEMENT PLASTER
	SOIL
	ASPHALT

SYM	DESCRIPTION	DATE

REGISTERED ARCHITECT CHRIS ALFSTAD 26963 STATE OF TEXAS

01/14/2026 SEAL

Jacobs / BURNS McDONNELL

JACOBS/B&M, A JOINT VENTURE
1100 NORTH GLEBE ROAD
SUITE 500
ARLINGTON, VA 22201

A/E Contract No. N62470-20-D-0002
A/E Task Order No. N62742-19-1015
JKO NO. 20A0063

A/E INFO

APPROVED

FOR COMMANDER NAVFAC DATE 02/02/2026

ACTIVITY
AFIMSC APPROVAL PER NAVFAC SAT-TO CHECKLIST

SATISFACTORY TO DATE 31 DEC 2025

DES: CAA	DRW: BH	REV: MH
PM/DM		KKK
BRANCH MANAGER		SMK
CHIEF ENG/ARCH		SMK
FIRE PROTECTION		RO

DEPARTMENT OF THE NAVY
NAVAL FACILITIES ENGINEERING SYSTEMS COMMAND
NAVFAC PACIFIC
NAVAL FACILITIES ENGINEERING SYSTEMS COMMAND – PACIFIC
JOINT REGION MARIANAS (JRM)
ANDERSEN AIR FORCE BASE
GUAM

FY24 AJJY183012 (P-012),
PDI: NORTH AIRCRAFT PARKING RAMP

GENERAL NOTES, SYMBOLS, AND EXTERIOR PERSPECTIVE VIEWS

SCALE: AS SHOWN
EPROJECTS NO.: 1665555
CONSTR CONTROL NO.

NAVFAC DRAWING NO.
17361883

SHEET 260 OF 377

A-001

REDESIGN FINAL SUBMITTAL

IF SHEET IS LESS THAN 22" X 34"
REDUCED PRINT. USE GRAPHIC SCALES

FILE NAME: C:\Users\alfstacm\Documents\P012-1665555-A-3D_AlfstaCM.rvt
LAYOUT NAME: GENERAL NOTES, SYMBOLS, AND EXTERIOR PERSPECTIVE VIEWS
PLOTTED: 1/14/2026 12:55:12 PM
USER: BH

EXTERIOR FINISH COLOR SCHEDULE

ITEM CODE	REFERENCE COLOR	PAINT CODE	LOCATION
EX-1	ANTIQUE LINEN	23578	EXTERIOR CONCRETE WALLS, INTEGRALLY COLORED CMU BLOCKS
EX-3	DARK BRONZE	-	GATES

NOTE: COORDINATE FINAL COLOR SELECTIONS WITH CONTRACTING OFFICER

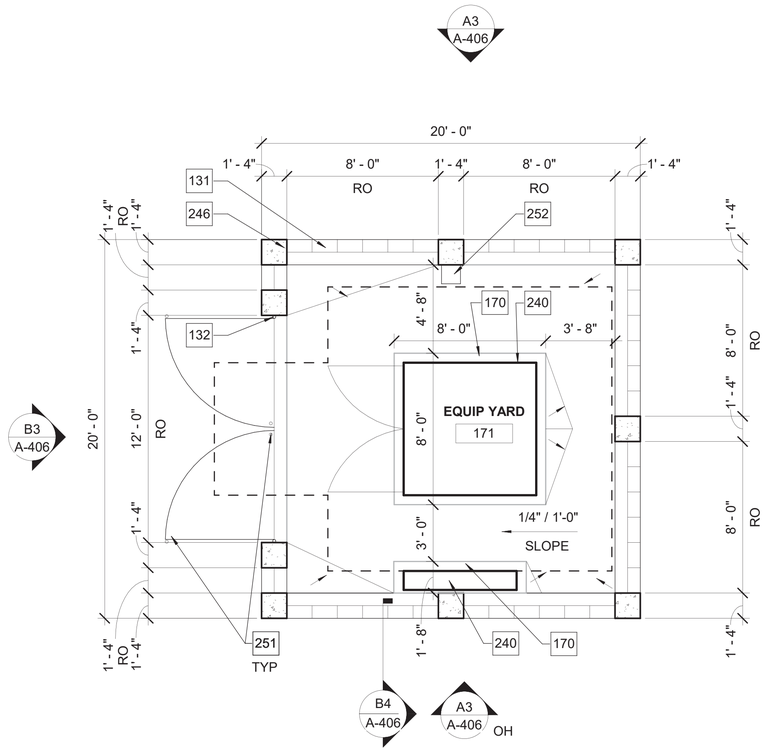

A1 EQUIPMENT YARD - ENLARGED PLAN

SCALE 1/4" = 1'-0"

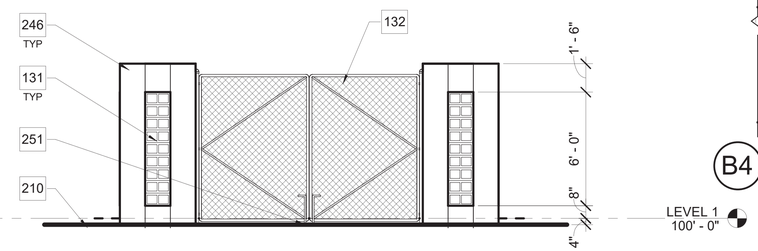

B3 EQUIPMENT YARD - FRONT ELEVATION

SCALE 1/4" = 1'-0"

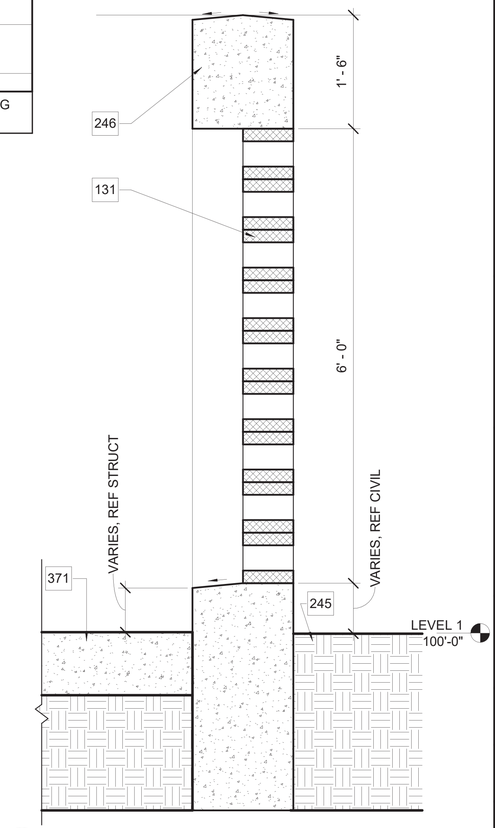

B4 WALL SECTION

SCALE NTS

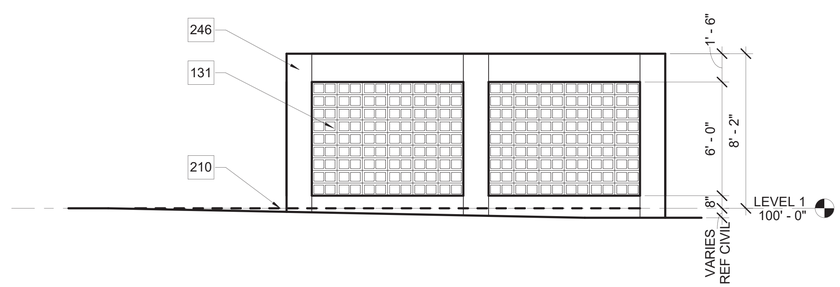

A3 EQUIPMENT YARD - SIDE ELEVATION

SCALE 1/4" = 1'-0"

KEYNOTES

131	INTEGRALLY COLORED SIDE TURNED CMU BLOCK BREEZEWAY (EX-1)
132	12'-0"w X 8'-0"H EPOXY COATED CHAIN LINK GATE, REFER TO FENCING SPECIFICATION, PROVIDE PADLOCK AND COORDINATE KEYING WITH CONTRACTING OFFICER
170	REINFORCED CONCRETE HOUSEKEEPING PAD, COORDINATE FINAL LAYOUT WITH SELECTED EQUIPMENT; REFER A3/S-502
210	FINISH GRADE/PAVEMENT; REFER CIVIL
240	ELECTRICAL SITE EQUIPMENT, REFER ELECTRICAL, CIVIL
245	FINISH GRADE/PAVEMENT; REFER CIVIL
246	CAST IN PLACE CONC WALL WITH FLUID APPLIED SILICONE ELASTOMERIC COATING, (EX-1), REFER STRUCTURAL
251	CORE 1" DIA, 1" DEEP HOLES INTO CONCRETE AT OPEN AND CLOSED LOCATIONS FOR 5/8" DIA GALVANIZED STEEL FOOT BOLTS WITH (2) 3/16" WALL BUSHINGS
252	WALL MOUNTED KILOWATT METER 12"x12", REFER TO ELECTRICAL
371	REINFORCED CONCRETE SLAB AND FOUNDATION, REFER STRUCTURAL

GRAPHIC SCALE

4 3 2 1 0 4 8

SCALE: 1/4"=1'-0"

NORTH ARROW

TRUE N

SYM	DESCRIPTION	DATE

NAVFAC

REGISTERED ARCHITECT CHRIS ALFSTAD 26963 STATE OF TEXAS

01/26/2026

SEAL

Jacobs / BURNS McDONNELL

JACOBS/B&M, A JOINT VENTURE
1100 NORTH GLEBE ROAD
SUITE 500
ARLINGTON, VA 22201

A/E Contract No. N62470-20-D-0002
A/E Task Order No. N62470-FF019
JKO NO. D3A3803

A/E INFO

APPROVED

FOR COMMANDER NAVFAC DATE 02/02/2026

ACTIVITY
AFIMSC APPROVAL PER NAVFAC SAT-TO CHECKLIST

SATISFACTORY TO DATE 31 DEC 2025

DES: CAA	DRW: CAA	REV: MH
PM/DM		KKK
BRANCH MANAGER		SMK
CHIEF ENG/ARCH		SMK
FIRE PROTECTION		RO

DEPARTMENT OF THE NAVY
NAVAL FACILITIES ENGINEERING SYSTEMS COMMAND
NAVFAC PACIFIC
NAVAL FACILITIES ENGINEERING SYSTEMS COMMAND ~ PACIFIC
JOINT REGION MARIANAS (JRM)
ANDERSEN AIR FORCE BASE
GUAM

FY24 AJJY183012 (P-012),
PDI: NORTH AIRCRAFT PARKING RAMP

DETACHED EQUIPMENT YARD

SCALE: AS SHOWN
EPROJECTS NO.: 1665555
CONSTR CONTROL NO.
NAVFAC DRAWING NO. 17361884
SHEET 261 OF 377

A-406

REDESIGN FINAL SUBMITTAL

IF SHEET IS LESS THAN 22" X 34" REDUCED PRINT. USE GRAPHIC SCALES

FILE NAME: C:\Users\alfstacm\Documents\P012-1665555-A-3D_AlfstaCM.rvt
LAYOUT NAME: DETACHED EQUIPMENT YARD
PLOTTED: 1/26/2026 2:01:13 PM
USER: CAA

SYMBOLS - POWER

WIRING RACEWAY TYPES

- LADDER TYPE CABLE TRAY
- EXPOSED CONDUIT - SINGLE LINE
- CONCEALED CONDUIT - SINGLE LINE
- UNDERGROUND DUCTBANK
- CONDUIT ROUTED VERTICALLY

RECEPTACLES

- 120V, NEMA 5-20R, UON

- RECESSED SIMPLEX
- SURFACE SIMPLEX
- RECESSED DUPLEX
- SURFACE DUPLEX
- RECESSED QUAD
- SURFACE QUAD
- CEILING RECESSED DUPLEX
- FLOORBOX RECESSED DUPLEX
- FLOORBOX RECESSED QUAD
- SPECIAL RECEPTACLE (REFER TO DRAWINGS OR PANEL SCHEDULE FOR NEMA CONFIGURATION)

RECEPTACLES WITH COMM OUTLETS

- SEE COMMUNICATIONS OUTLET DETAILS FOR POWER AND COMMUNICATIONS REQUIREMENTS

FBAV# RECESSED FLOOR BOX W. QUAD 5-20R POWER, COMPARTMENTED GANG FOR COMM AND AV COMPARTMENT.

FB# RECESSED FLOOR BOX W. QUAD 5-20R POWER, COMPARTMENTED GANG FOR COMM.

SF# RECESSED POWER/COMM FLOOR BOX PROVIDED FOR FINAL CONNECTION TO SYSTEMS FURNITURE.

JUNCTION BOXES

- COORDINATE JUNCTION BOX INSTALLATION WITH NEARBY EQUIPMENT.

- RECESSED IN WALL, UON
- RECESSED IN FLOOR, UON
- SURFACE MOUNTED, UON

EQUIPMENT CONNECTIONS

- MECHANICAL EQUIPMENT CONNECTION. PROVIDE DISCONNECT / STARTER / VFD AS INDICATED ON MECHANICAL EQUIPMENT PLAN AND SCHEDULES
- ELECTRICAL SINGLE POINT CONNECTION

POWER DEVICES GENERAL INFORMATION

LP-X
GFI
- SYMBOL MODIFIER(S)
- RECEPTACLE LISTED ABOVE

EF-X
- EQUIPMENT IDENTIFICATION

LP-X
GFI
- PANELBOARD - CIRCUIT
- SYMBOL MODIFIER(S)
- JUNCTION BOX LISTED ABOVE

EF-X
- EQUIPMENT IDENTIFICATION

HL-X
GFI
- PANELBOARD - CIRCUIT
- SYMBOL MODIFIER(S)
- MECHANICAL EQUIPMENT CONNECTION
  - SEE MECHANICAL EQUIPMENT SCHEDULE FOR CONNECTION INFORMATION

SP
- REMOTE DISCONNECT SWITCH: SINGLE POINT CONNECTION
  - SEE MECHANICAL EQUIPMENT SCHEDULE FOR ADDITIONAL INFORMATION

SYMBOLS - POWER

SWITCHES

- DISCONNECT SWITCH ("SP" MODIFIER = SINGLE POINT / DISCONNECT PART OF EQUIPMENT)
- MOTOR-RATED SWITCH
- COMBINATION STARTER/DISCONNECT SWITCH

EQUIPMENT

LP11 — EQUIPMENT IDENTIFIER

- ELECTRICAL EQUIPMENT INCLUDING, BUT NOT LIMITED TO, TRANSFORMERS, SWITCHBOARDS AND PANELBOARDS ARE DRAWN TO SCALE IN THE PLANS AND ARE CALLED OUT WITH A UNIQUE IDENTIFIER.

SYMBOLS - GROUNDING / LIGHTNING PROTECTION

- AIR TERMINAL
- GROUND ROD
- GROUND TEST WELL
- STATIC GROUND
- GROUNDING COUNTERPOISE/CONDUCTOR
  - BURIED, BARE CABLE (EXTERIOR)
  - COPPER, #4/0 AWG MINIMUM, UON
- GROUND BAR
  MGB = MAIN GROUND BUSBAR
  PBB, SBB = TELECOMM BONDING BUSBARS
  MPG = LAB MULTIPOINT GROUND (AND STATIC)
- BOLTED GROUND CONNECTION
- EXOTHERMIC WELDED CONNECTION
- DOWN CONDUCTOR

SYMBOL MODIFIERS

AC	ABOVE COUNTER MOUNTING
C	RECESSED IN CEILING
CB	COFFEE BREWER
CO	COPIER
DW	DISHWASHER
EP OR EXP	EXPLOSION PROOF
F	RECESSED IN FLOOR
GD	GARBAGE DISPOSAL
GFI	GROUND FAULT CIRCUIT INTERRUPTER
IG	ISOLATED GROUND
MW	MICROWAVE
PR	PRINTER
PROJ	PROJECTOR
REF	REFRIGERATOR
SB	SMART BOARD
SH	SHREDDER
SP	SINGLE POINT CONNECTION
SW: XX	CONTROLLED BY SWITCH LABELED "XX"
TV	TELEVISION OR DISPLAY MONITOR
VM	VENDING MACHINE
WC	WALL-MOUNTED CLOCK
WF	WATER COOLER
WP	WEATHERPROOF, WITH GFI
WPIU	WEATHERPROOF IN USE, WITH GFI
XX" AFF	MOUNT XX" AFF

SYMBOLS - LIGHTING

LIGHTING FIXTURES

- REFER TO FIXTURE SCHEDULE FOR FIXTURE TYPE INFORMATION

- 2'X4' FIXTURE, UON
- EMERGENCY FIXTURE WITH BATTERY BACKUP, UON (NOTE: FIXTURES NOTED ON PLAN WITH HALF-SHADE INDICATE EMERGENCY BATTERY BACKUP)
- 1'X4' FIXTURE, UON
- 2'X2' FIXTURE, UON
- DOWNLIGHT OR SPOTLIGHT, UON
- EXIT SIGNS, CEILING: ARROW INDICATES EGRESS DIRECTION
- EXIT SIGNS, WALL: ARROW INDICATES EGRESS DIRECTION
- PC — PHOTOCELL
- WALL MOUNTED FIXTURE
- EMERGENCY WALL MOUNTED FIXTURE
- BL — FLASHING BLUE LIGHT FIXTURE, CEILING MOUNTED
- BL — FLASHING BLUE LIGHT FIXTURE, WALL MOUNTED AT MIN. 10'-0" AFF, UON
- RL — FLASHING RED LIGHT FIXTURE, CEILING MOUNTED

FIXTURE GENERAL INFORMATION

F1E
LP-1
10' - 0"
a

- FIXTURE TYPE
- 'E' DENOTES EMERGENCY FIXTURE
- PANELBOARD - CIRCUIT NUMBER
- FIXTURE MOUNTING HEIGHT (IF APPLICABLE)
- SWITCH 'LEG'
  - THE SWITCH WITH SAME LETTER OPERATES THIS FIXTURE

CONTROL DEVICES GENERAL INFORMATION

TOGGLE SWITCH — 3a, 3b

DEMARCATION
D: DIMMER
TM: TIMER
OC: OCCUPANCY SENSOR
3: 3-WAY
4: 4-WAY
EP: EXPLOSION PROOF
BL: FLASHING BLUE LIGHT

SEE NOTE 2

SWITCH 'LEG' DESIGNATION

NOTES:
1. NO DEMARCATION OR SWITCH 'LEG' INDICATES THAT THE SWITCH CONTROLS OF THE FIXTURES WITHIN THE SAME ROOM

2. ADDITIONAL DEMARCATIONS SEPARATED BY A COMMA "," INDICATE ADDITIONAL SWITCHES WITHIN A COMMON OUTLET BACKBOX.

LIGHTING CONTROL GENERAL INFORMATION

CLASSROOM — ROOM / SPACE TAG
101
CTRL: OC — LIGHTING CONTROLS REQUIRED FOR A PARTICULAR SPACE. SEE SHEET EL103 FOR LIGHTING CONTROL ABBREVIATIONS FOR EACH SPACE

SYMBOLS - ONE-LINE DIAGRAM

- CONNECTION
- CONTINUATION
- SEPARABLE CONNECTOR OR CONNECTION FOR DRAWOUT ASSEMBLIES
- FUSED DISCONNECT SWITCH
- TRANSFORMER
- GROUND
- DELTA - WYE TRANSFORMER CONNECTION
- DM — DIGITAL METER
- SPD — SURGE PROTECTIVE DEVICE
- VFD — VARIABLE FREQUENCY DRIVE
- ST — SHUNT TRIP
- KWH — KILOWATT HOUR METER
- VS — VOLTMETER SELECTOR SWITCH
- AS — AMMETER SELECTOR SWITCH
- V — VOLTMETER
- A — AMMETER
- CIRCUIT BREAKER
- SWITCH
- DISCONNECT SWITCH
- SPECIAL RECEPTACLE
- M — PANELBOARD (PANELBOARD NAMED 'M')
- LIGHTNING ARRESTOR
- AUTOMATIC OR MANUAL TRANSFER SWITCH
- MFM — MULTI-FUNCTION DIGITAL UTILITY METER
- N, G — NEUTRAL CONNECTION TO GROUND
- G — DIESEL ENGINE GENERATOR
- K — KEY INTERLOCK
- R — RELAY
- C — CONTACTOR
- PHOTOCELL
- 20 — ELECTRICAL MOTOR 20 - MOTOR HORSEPOWER
- P-### — EXISTING CIRCUIT BREAKER
- VFI — VACUUM FAULT INTERUPTER

SYMBOLS - SITE

- ELECTRICAL DUCTBANK DEMOLITION
- ELECTRICAL STRUCTURE DEMOLITION
- UE — UNDERGROUND ELECTRICAL
- E_X — EXISTING ELECTRICAL DUCTBANK
- MH-XX-X — MANHOLE
- SWITCH
- STARTER DISCONNECT SWITCH
- HH — HANDHOLE (SEE DETAIL CALLOUT FOR HANDHOLE TYPE)
- TRANSFORMER
- POLE MOUNTED LIGHT FIXTURE
- PANELBOARD
- APRON RAMP LIGHTING POLE WITH APRON LIGHTING FIXTURES
- 15KV ABOVE GROUND TERMINATING CABINET

SYMBOLS - AIRFIELD LIGHTING

- L-852T(L) TAXIWAY EDGE LIGHT
- L-858(L) GUIDANCE SIGN
- L-868B BASE CAN WITH BLANK CEMENT
- 1-2" CONDUIT WITH L-824C, 5KV CABLE SEE EA101 AND EA102 FOR NUMBER OF CONDUCTORS

LEGEND NOTES

1. SYMBOL ORIENTATION DOES NOT IMPLY DEVICE OR EQUIPMENT ORIENTATION UNLESS NOTED AS SUCH.
2. SYMBOL SIZE DOES NOT IMPLY EQUIPMENT SIZE, UON.
3. MOUNTING HEIGHT INDICATED IN LEGEND AND ON THE DRAWINGS MUST BE THE DISTANCE MEASURED FROM THE CENTER OF THE DEVICE TO THE FINISHED FLOOR.
4. NOT ALL SYMBOLS ON THIS SHEET ARE USED AS PART OF THIS PROJECT.

SYM	DESCRIPTION	DATE

NAVFAC

STATE OF MISSOURI — STEVEN D. STRATTON — NUMBER PE-2006024920 — PROFESSIONAL ENGINEER
01/20/2026
SEAL

Jacobs / BURNS McDONNELL
JACOBS/B&M, A JOINT VENTURE
1100 NORTH GLEBE ROAD
SUITE 500
ARLINGTON, VA 22201
A/E Contract No. N62470-20-D-0002
A/E Task Order No. N62742-FF3F15
JCG NO. 224326003
A/E INFO

APPROVED
FOR COMMANDER NAVFAC DATE 02/02/2026

ACTIVITY
AFIMSC APPROVAL PER NAVFAC SAT-TO CHECKLIST

SATISFACTORY TO DATE 31 DEC 2025

DES: DSB	DRW: BDP	REV: SDS

PM/DM KKK
BRANCH MANAGER SMK
CHIEF ENG/ARCH SMK
FIRE PROTECTION RO

DEPARTMENT OF THE NAVY
NAVAL FACILITIES ENGINEERING SYSTEMS COMMAND
NAVFAC PACIFIC
NAVAL FACILITIES ENGINEERING SYSTEMS COMMAND ~ PACIFIC
JOINT REGION MARIANAS (JRM)
ANDERSEN AIR FORCE BASE
GUAM

FY24 AUY183012 (P-012),
PDI: NORTH AIRCRAFT PARKING RAMP

ELECTRICAL LEGEND 1 OF 2

SCALE: AS SHOWN
EPROJECTS NO.: 1665555
CONSTR CONTROL NO.
NAVFAC DRAWING NO. 17361885
SHEET 262 OF 377

E-001

REDESIGN FINAL SUBMITTAL

IF SHEET IS LESS THAN 22" X 34" REDUCED PRINT. USE GRAPHIC SCALES

FILE NAME: C:\Revit_Projects\133097_E_Central_bdpinkley@burnsmcd.com.rvt
LAYOUT NAME: ELECTRICAL LEGEND 1 OF 2
PLOTTED: 1/14/2026 9:24:59 AM
USER: BDP

GENERAL NOTES: APPLICABLE TO ELECTRICAL SHEETS

1. CONDUCTORS MUST BE RUN IN CONDUIT, AND CONDUIT MUST BE ROUTED CONCEALED UNLESS OTHERWISE NOTED ON THE DRAWINGS.
2. EQUIPMENT MUST BE FIELD MARKED TO WARN PERSONS OF POTENTIAL ELECTRIC ARC FLASH HAZARD IN ACCORDANCE WITH NFPA 70 AND 70E.
3. COORDINATE WITH MECHANICAL TRADE REGARDING ELECTRICAL REQUIREMENTS OF ACTUAL EQUIPMENT PROVIDED.
4. MOUNTING HEIGHT FOR LIGHT FIXTURES MUST BE FROM THE BOTTOM OF FIXTURES TO THE FINISHED FLOOR OR GRADE.
5. CONDUCTORS MUST BE COPPER.
6. ELECTRICAL EQUIPMENT AND OUTLET INSTALLATION LOCATIONS MUST BE COORDINATED WITH FURNITURE INSTALLATION.
7. FLOOR MOUNTED ELECTRICAL EQUIPMENT INCLUDING BUT NOT LIMITED TO SWITCHBOARDS, TRANSFORMERS, MOTOR CONTROL CENTERS, AND POWER CONDITIONERS MUST BE MOUNTED ON A CONCRETE EQUIPMENT PAD IN ACCORDANCE WITH STRUCTURAL DETAILS
8. AIC RATING LISTED ON ELECTRICAL EQUIPMENT IS A MINIMUM RATING.
9. UNLESS OTHERWISE NOTED, CIRCUIT BREAKERS RATED AT 400A AND LARGER MUST BE 100 PERCENT RATED ASSEMBLIES.
10. AREAS DISTURBED BY TRENCHING / DIGGING FOR DUCT AND MAINTENANCE HOLE INSTALLATION MUST BE RETURNED TO THE ORIGINAL CONDITION PRIOR TO BEGINNING OF PROJECT.

ABBREVIATIONS

A	AMPERES
AC	ALTERNATING CURRENT
AFF	ABOVE FINISHED FLOOR
AFG	ABOVE FINISHED GRADE
AIC	AMPERES INTERRUPTING CAPACITY
AV	AUDIO/VIDEO
AWG	AMERICAN WIRE GAUGE
BAS	BUILDING AUTOMATION SYSTEM
BBC	BONDING BACKBONE CONDUCTOR
BICSI	BUILDING INDUSTRY CONSULTING SERVICE INTERNATIONAL
C	CONDUIT
CAT	CATEGORY
CATV	CABLE TELEVISION
CBP	COPPER BACKBONE PATCH PANEL
CCTV	CLOSED CIRCUIT TELEVISION
CH	CHILLED WATER
CL	CENTERLINE
CO	CONTRACTING OFFICER
COMM	COMMUNICATIONS
CPP	COPPER HORIZONTAL PATCH PANEL
CT	CABLE TRAY
CU	COPPER
DBL. N.	DOUBLE NEUTRAL
EC	EMPTY CONDUIT
EF	EXHAUST FAN
EGC	EQUIPMENT GROUNDING CONDUCTOR
EIA	ELECTRONICS INDUSTRIES ASSOCIATIONS
EM/NL	EMERGENCY / NIGHT LIGHT
EMT	ELECTRICAL METALLIC TUBING
EPO	EMERGENCY POWER OFF
ETR	EXISTING TO REMAIN
EX OR EXP	EXPLOSION PROOF
FAAP	FIRE ALARM ANNUNCIATOR PANEL
FACP	FIRE ALARM CONTROL PANEL
FBO	FURNISHED BY OTHERS
FO	FIBER OPTIC
FPD	FLAT PANEL DISPLAY
FPP	FIBER OPTIC PATCH PANEL
FT	FEET OR FOOT
GFCI	GOVERNMENT FURNISHED, CONTRACTOR INSTALLED
GFGI	GOVERNMENT FURNISHED AND INSTALLED
GFI	GROUND FAULT INTERRUPTER
G OR GND	GROUND
GFE	GOVERNMENT FURNISHED EQUIPMENT
GFR	GROUND FAULT RELAY
GFP	GROUND FAULT PROTECTION
GRS	GALVANIZED RIGID STEEL CONDUIT
HID	HIGH INTENSITY DISCHARGE
HZ	HERTZ
IDS	INTRUSION DETECTION SYSTEM
IG	ISOLATED GROUND
IPDS	INTEGRATED POWER DISTRIBUTION SYSTEM
K	KILO
KCMIL	THOUSAND CIRCULAR MILS
KVA	KILOVOLT AMPERES
KWH	KILOWATT HOURS
LC	LIGHTING CONTACTOR
LP	LIGHTNING PROTECTION
LPS	LIGHTNING PROTECTION SYSTEM
LSI	LONG TIME, SHORT TIME, INSTANTANEOUS
LW	LOCKABLE WIREWAY
MAX	MAXIMUM
MCB	MAIN CIRCUIT BREAKER
MDP	MAIN DISTRIBUTION PANEL
MH	MAINTENANCE HOLE
MLO	MAIN LUGS ONLY
MM	MULTIMODE
MN/PA	MASS NOTIFICATION/PUBLIC ADDRESS
MTD	MOUNTED
N	NEUTRAL CONDUCTOR
N.C.	NORMALLY CLOSED
NEC	NATIONAL ELECTRICAL CODE
NEMA	NATIONAL ELECTRICAL MANUFACTURER'S ASSOCIATION
NIC	NOT IN CONTRACT
NIPR	NON-CLASSIFIED INTERNET PROTOCOL ROUTING
NL	NIGHT LIGHT
N.O.	NORMALLY OPEN
NTS	NOT TO SCALE
OC	ON CENTER
PBB	PRIMARY BONDING BUSBAR
PDU	POWER DISTRIBUTION UNIT
PIV	POST INDICATOR VALVE
PR	PAIR
PVC	POLYVINYL CHLORIDE
RBB	RACK BONDING BUSBAR
RECEPT	RECEPTACLE
RGS	RIGID GALVANIZED STEEL CONDUIT
RM	ROOM
RMC	RIGID METAL CONDUIT
SBB	SECONDARY BONDING BUSBAR
SBC	SECONDARY BONDING CONDUCTOR
SCCR	SHORT CIRCUIT CURRENT RATING
STP	SHIELDED TWISTED PAIR
SIPR	SECRET INTERNET PROTOCOL ROUTING
SM	SINGLE MODE
SPD	SURGE PROTECTION DEVICE
SPECS	CONTRACT SPECIFICATIONS
SPDT	SINGLE POLE DOUBLE THROW
SPST	SINGLE POLE SINGLE THROW
SRG	STATIC REFERENCE GRID
STR	STRAND
T	TRANSFORMER
TB	TELEPHONE BACKBOARD
TBB	TELECOMMUNICATIONS BONDING BACKBONE
TDMM	TELECOMMUNICATIONS DISTRIBUTION METHODS MANUAL
TEBC	TELECOMMUNICATIONS EQUIPMENT BONDING CONDUCTOR
TECH	TECHNICIAN
TR	TELECOMMUNICATIONS ROOM
TVSS	TRANSIENT VOLTAGE SURGE SUPPRESSION
TYP	TYPICAL
TZC	TIME ZONE CLOCK
UL	UNDERWRITERS' LABORATORIES
UON	UNLESS OTHERWISE NOTED
UTP	UNSHIELDED TWISTED PAIR
V	VOLTS
VA	VOLT AMPERES
VFD	VARIABLE FREQUENCY DRIVE
VFI	VACUUM FAULT INTERUPTER
W	WIRE OR WATT
WP	WEATHERPROOF
WPIU	WEATHERPROOF WHILE IN USE
XFMR	TRANSFORMER
Z	IMPEDANCE

ARC FLASH LABEL FOR EQUIPMENT

1. PROVIDE SELF-ADHESIVE VINYL LABEL TO AFFIX TO ELECTRICAL EQUIPMENT TO WARN OF ARC FLASH HAZARDS.
2. THE LABEL FORMAT AND TEXT MUST BE IN ACCORDANCE WITH THE FIGURE BELOW.
3. THE LABEL MUST BE LOCATED ON THE EQUIPMENT CLEARLY VISIBLE TO PERSONS BEFORE EXAMINATION, ADJUSTMENT, SERVICING, OR MAINTENANCE OF THE EQUIPMENT.
4. THE SIZE OF THE LABEL MUST BE:

EQUIPMENT	HEIGHT	WIDTH
INDOOR	2 in	3 in
OUTDOOR	4 in	6 in

5. A DOWNLOADABLE WINDOWS METAFILE IS AVAILABLE ON THE WHOLE BUILDING DESIGN GUIDE WEBSITE (WWW.WDBG.ORG) FOR USE IN A LABEL MAKING MACHINE.
   A. THE FILE IS LOCATED ON THE "NAVFAC CADD DETAILS" PAGE. TO NAVIGATE TO THIS LOCATION, FOLLOW: HOME > DOCUMENTS & REFERENCES > CCB > CADD LIBRARY > NAVFAC CADD RESOURCES > NAVFAC CADD DETAILS.
6. PROVIDE ARC FLASH WARNING LABELS ON ELECTRICAL EQUIPMENT LIKELY TO REQUIRE EXAMINATION, SERVICING, OR MAINTENANCE WHILE ENERGIZED. EQUIPMENT MUST INCLUDE BUT NOT LIMITED TO INCLUDE PAD-MOUNTED TRANSFORMERS, SWITCHGEAR, SWITCHBOARDS, PANELBOARDS, DISCONNECT SWITCHES, INDUSTRIAL CONTROL PANELS, AND METER SOCKET ENCLOSURES.
7. PROVIDE A COPY OF THE ARC FLASH STUDY REQUIRED BY SECTION 26 05 73 POSTED IN THE ELECTRICAL ROOM.

WARNING

Shock, Arc Flash, and Arc Blast Hazard Appropriate PPE Required Failure to Comply Can Result in Injury or Death

SYM	DESCRIPTION	DATE

STATE OF MISSOURI — STEVEN D. STRATTON — NUMBER PE-2006024920 — PROFESSIONAL ENGINEER

01/20/2026

SEAL

Jacobs / BURNS McDONNELL

JACOBS/B&M, A JOINT VENTURE
1100 NORTH GLEBE ROAD
SUITE 500
ARLINGTON, VA 22201

A/E Contract No. N62470-20-D-0002
A/E Task Order No. N62470FE015
JCG NO. 224326003

A/E INFO

APPROVED

FOR COMMANDER NAVFAC DATE 02/02/2026

ACTIVITY
AFIMSC APPROVAL PER NAVFAC SAT-TO CHECKLIST

SATISFACTORY TO DATE 31 DEC 2025

DES:	DSB	DRW:	BDP	REV:	SDS
PM/DM					KKK
BRANCH MANAGER					SMK
CHIEF ENG/ARCH					SMK
FIRE PROTECTION					RD

DEPARTMENT OF THE NAVY
NAVAL FACILITIES ENGINEERING SYSTEMS COMMAND
NAVFAC PACIFIC
NAVAL FACILITIES ENGINEERING SYSTEMS COMMAND – PACIFIC
JOINT REGION MARIANAS (JRM)
ANDERSEN AIR FORCE BASE
GUAM

FY24 AUY183012 (P-012),
PDI: NORTH AIRCRAFT PARKING RAMP

ELECTRICAL LEGEND 2 OF 2

SCALE: AS SHOWN
EPROJECTS NO.: 1665555
CONSTR CONTROL NO.
NAVFAC DRAWING NO. 17361886
SHEET 263 OF 377

E-002

REDESIGN FINAL SUBMITTAL

IF SHEET IS LESS THAN 22" X 34" REDUCED PRINT. USE GRAPHIC SCALES

FILE NAME: C:\Revit_Projects\133097_E_Central_bdpinkley@burnsmcd.com.rvt
LAYOUT NAME: ELECTRICAL LEGEND 2 OF 2
PLOTTED: 1/14/2026 9:24:59 AM
USER: BDP

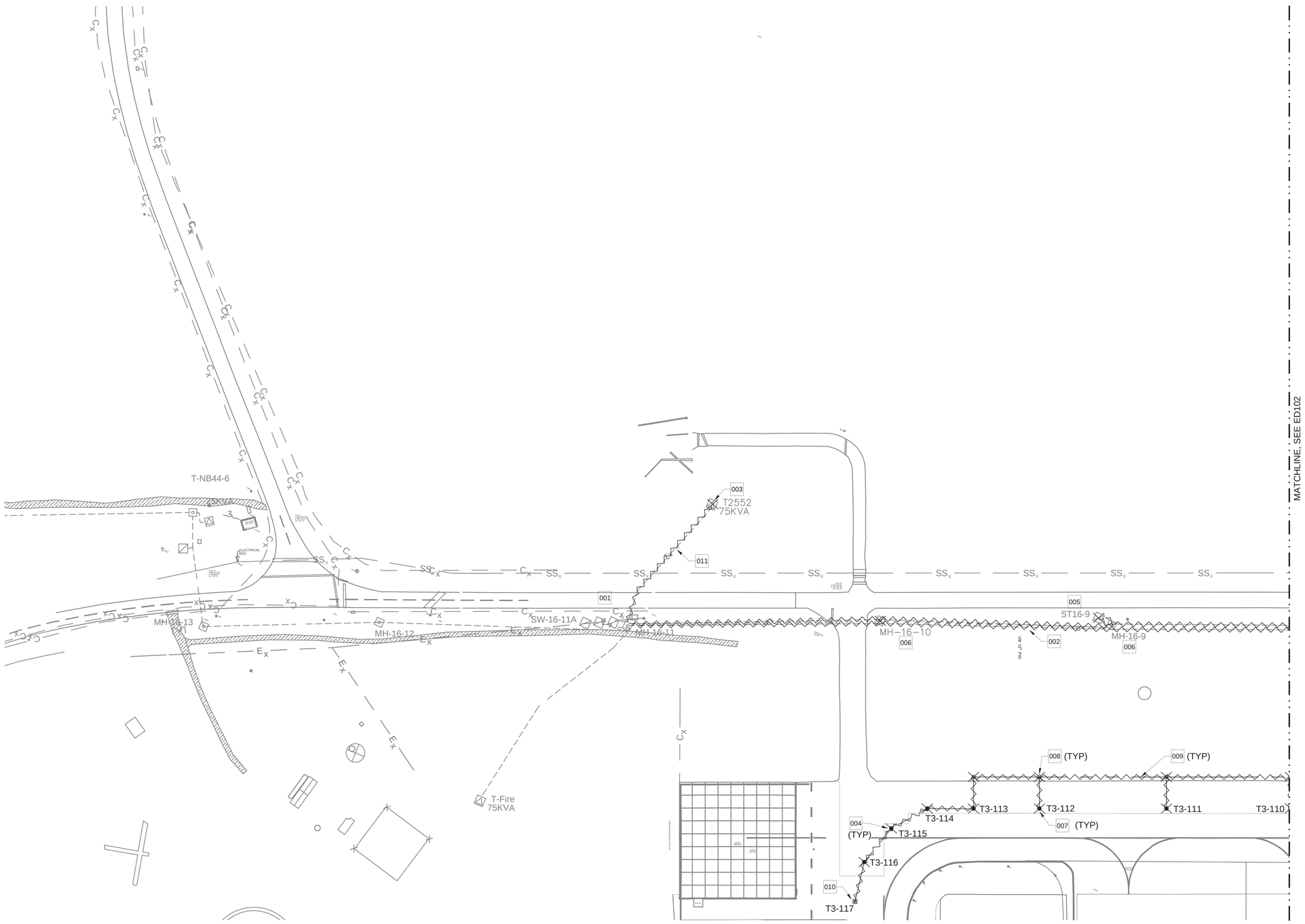

A1 ELECTRICAL DEMOLITION PLAN 1

SCALE 1" = 80'

GENERAL NOTES - SITE PLANS

A.	SEE SHEETS E-001 & E-002 FOR ABBREVIATIONS, LEGENDS AND GENERAL NOTES
B.	EXISTING TAXIWAY EDGE LIGHTING CIRCUIT FOR TAXIWAY DELTA LOOP CIRCUIT T-3 MUST REMAIN ACTIVE DURING CONSTRUCTION. PROVIDE JUMPERS TO MAINTAIN OPERATION OF TAXIWAY EDGE LIGHT CIRCUITS. SEE EA702 FOR MORE INFORMATION
C.	REMOVE ELECTRICAL ITEMS IN HATCHED AREA.
D.	COORDINATE WITH BASE CIVIL ENGINEERING PRIOR TO START OF DEMOLITION. COORDINATE POWER SHUT DOWN WITH BASE CIVIL ENGINEERING.
E.	NOT ALL UTILITIES ARE SHOWN. LOCATE UTILITIES PRIOR TO START OF WORK.

KEYED NOTES

001.	DISCONNECT THE EXISTING MEDIUM VOLTAGE CABLE FROM EXISTING SWITCH. SWITCH TO REMAIN IN PLACE.
002.	REMOVE EXISTING CONDUIT AND MEDIUM VOLTAGE CABLE FOR FEEDERS P-94 AND P-90.
003.	REMOVE EXISTING PAD-MOUNTED TRANSFORMER AND FOUNDATION.
004.	REMOVE EXISTING TAXIWAY LIGHT FIXTURES FROM EXISTING BASE CAN. PROVIDE BLANK COVER ON BASE CAN. TURN EXISTING LIGHT FIXTURE AND ISOLATION TRANSFORMER OVER TO THE GOVERNMENT.
005.	REMOVE EXISTING PAD-MOUNTED SWITCH AND FOUNDATION.
006.	REMOVE EXISTING MANHOLE.
007.	REMOVE EXISTING TAXIWAY EDGE LIGHT AND BASE CAN. TURN TAXIWAY EDGE LIGHT FIXTURE OVER TO THE GOVERNMENT. CABLE AND CONDUIT MUST BE DISPOSED BY CONTRACTOR.
008.	REMOVE EXISTING JUNCTION CAN.
009.	REMOVE EXISTING CONDUIT AND WIRE.
010.	EXISTING LIGHT FIXTURE AND BASE CAN TO REMAIN.
011.	REMOVE EXISTING CONDUIT AND MEDIUM VOLTAGE CABLE FOR FEEDER P-94.

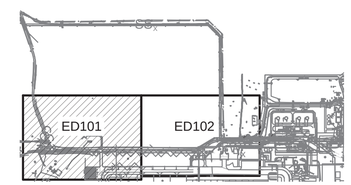

AREA KEY MAP

GRAPHIC SCALE

0 20' 80' 160'

SCALE: 1"=80'

NORTH ARROW

TRUE N

STATE OF MISSOURI
STEVEN D. STRATTON
NUMBER
PE-2006024920
PROFESSIONAL ENGINEER
01/20/2026
SEAL

Jacobs / BURNS McDONNELL
JACOBS/B&M, A JOINT VENTURE
1100 NORTH GLEBE ROAD
SUITE 500
ARLINGTON, VA 22201

A/E Contract No. N62742-20-D-0002
A/E Task Order No. N62742215F0315
JCG NO. 0343806/3

A/E INFO

APPROVED
Eva Mize
FOR COMMANDER NAVFAC DATE 02/02/2026

ACTIVITY
AFIMSC APPROVAL PER NAVFAC SAT-TO CHECKLIST

SATISFACTORY TO DATE 31 DEC 2025

DES: DSB DRW: BDP REV: SDS
PM/DM KKK
BRANCH MANAGER SMK
CHIEF ENG/ARCH SMK
FIRE PROTECTION RO

DEPARTMENT OF THE NAVY
NAVFAC PACIFIC
NAVAL FACILITIES ENGINEERING SYSTEMS COMMAND
NAVAL FACILITIES ENGINEERING SYSTEMS COMMAND ~ PACIFIC
JOINT REGION MARIANAS (JRM)
ANDERSEN AIR FORCE BASE
GUAM

FY24 AJJY183012 (P-012),
PDI: NORTH AIRCRAFT PARKING RAMP

ELECTRICAL DEMOLITION PLAN 1

SCALE: AS SHOWN
EPROJECTS NO.: 1665555
CONSTR CONTROL NO.
NAVFAC DRAWING NO. 17361887
SHEET 264 OF 377

ED101

REDESIGN FINAL SUBMITTAL

IF SHEET IS LESS THAN 22" X 34" REDUCED PRINT. USE GRAPHIC SCALES

FILE NAME: Z:\Clients\ANF\USNavy\Poc\133097_GuamP012NAR\Design\Elec\Sheets\P012_1665555_ED101-ED102.dwg
LAYOUT NAME: ED101
PLOTTED: 01/14/2026 9:19am
USER: bdpinkley

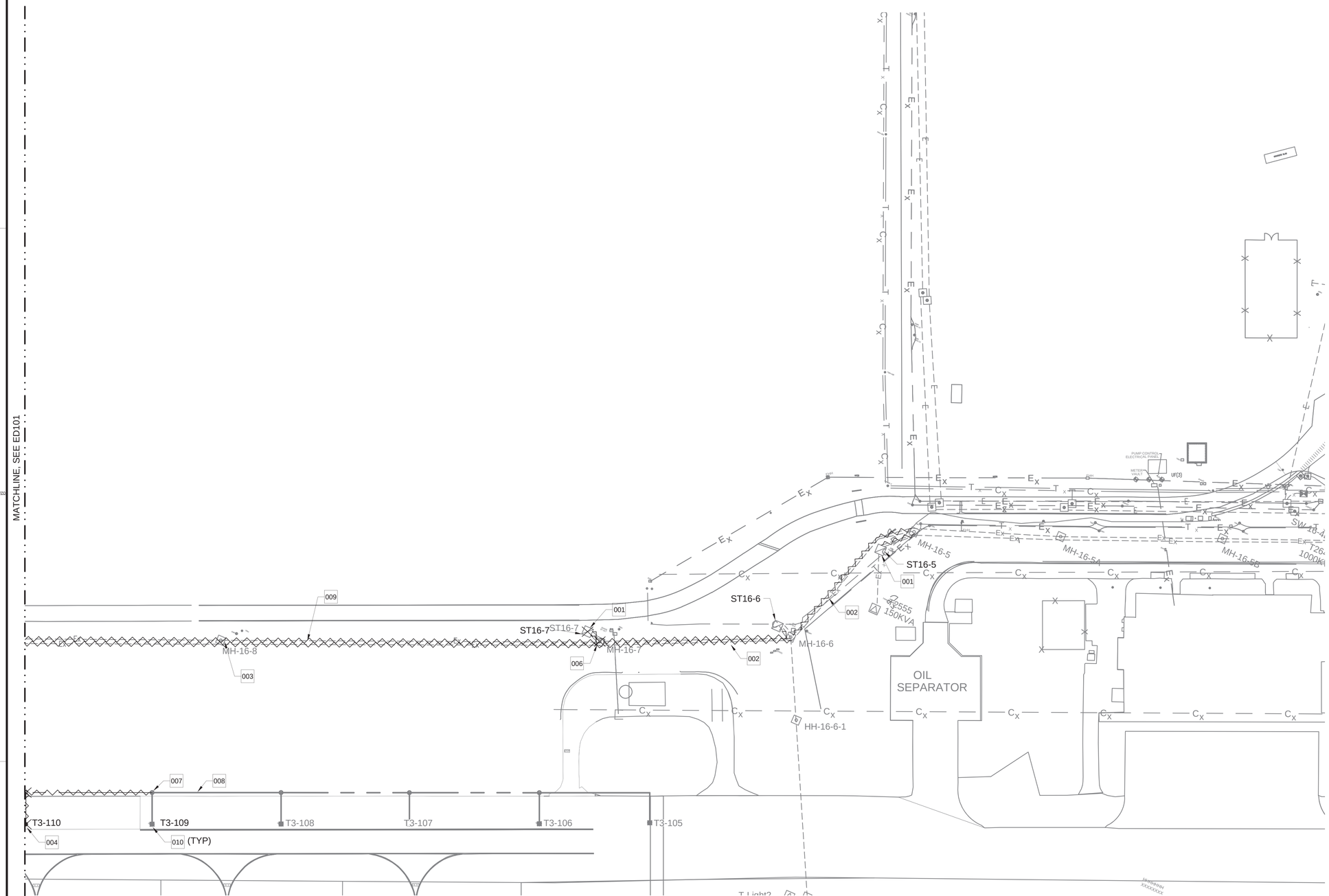

A1 ELECTRICAL DEMOLITION PLAN 2

SCALE 1" = 80'

GENERAL NOTES - SITE PLANS

A.	SEE SHEETS E-001 & E-002 FOR ABBREVIATIONS, LEGENDS AND GENERAL NOTES
B.	EXISTING TAXIWAY EDGE LIGHTING CIRCUIT FOR TAXIWAY DELTA LOOP CIRCUIT T-3 MUST REMAIN ACTIVE DURING CONSTRUCTION. PROVIDE JUMPERS TO MAINTAIN OPERATION OF TAXIWAY EDGE LIGHT CIRCUITS. SEE EA702 FOR MORE INFORMATION.
C.	REMOVE ELECTRICAL ITEMS IN HATCHED AREA.
D.	COORDINATE WITH BASE CIVIL ENGINEERING PRIOR TO START OF DEMOLITION. COORDINATE POWER SHUT DOWN WITH BASE CIVIL ENGINEERING.
E.	NOT ALL UTILITIES ARE SHOWN. LOCATE UTILITIES PRIOR TO START OF WORK.

KEYED NOTES

001.	DISCONNECT THE EXISTING MEDIUM VOLTAGE CABLE FROM EXISTING SWITCH. SWITCH TO REMAIN IN PLACE.
002.	REMOVE EXISTING CONDUIT AND MEDIUM VOLTAGE CABLE FOR FEEDER P-90. FEEDER P-94 MUST REMAIN IN PLACE.
003.	REMOVE EXISTING MANHOLE.
004.	REMOVE EXISTING TAXIWAY EDGE LIGHT AND BASE CAN. TURN TAXIWAY EDGE LIGHT FIXTURE OVER TO THE GOVERNMENT. CABLE AND CONDUIT MUST BE DISPOSED BY CONTRACTOR.
005.	REMOVE EXISTING JUNCTION CAN.
006.	REMOVE EXISTING CONDUIT AND WIRE.
007.	EXISTING JUNCTION CAN TO REMAIN.
008.	EXISTING CONDUIT TO REMAIN.
009.	REMOVE EXISTING CONDUIT AND MEDIUM VOLTAGE CABLE FOR FEEDERS P-94 AND P-90.
010.	EXISTING LIGHT FIXTURE AND BASE CAN TO REMAIN.

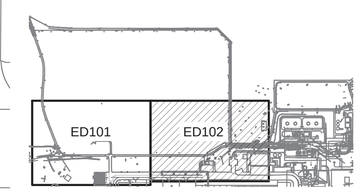

AREA KEY MAP

GRAPHIC SCALE

0 20' 80' 160'

SCALE: 1"=80'

NORTH ARROW

TRUE N

NAVFAC

STATE OF MISSOURI
STEVEN D. STRATTON
NUMBER
PE-2006024920
PROFESSIONAL ENGINEER

01/20/2026

SEAL

Jacobs / BURNS McDONNELL

JACOBS/B&M, A JOINT VENTURE
1100 NORTH GLEBE ROAD
SUITE 500
ARLINGTON, VA 22201

A/E Contract No. N62742-20-D-0002
A/E Task Order No. N62742ZF0315
JEG NO. D2430603

A/E INFO

APPROVED

FOR COMMANDER NAVFAC DATE 02/02/2026

ACTIVITY
AFIMSC APPROVAL PER NAVFAC SAT-TO CHECKLIST

SATISFACTORY TO DATE 31 DEC 2025

DES: DSB DRW: BDP REV: SDS

PM/DM	KKK
BRANCH MANAGER	SMK
CHIEF ENG/ARCH	SMK
FIRE PROTECTION	RO

DEPARTMENT OF THE NAVY
NAVAL FACILITIES ENGINEERING SYSTEMS COMMAND
NAVFAC PACIFIC
NAVAL FACILITIES ENGINEERING SYSTEMS COMMAND – PACIFIC
JOINT REGION MARIANAS (JRM)
ANDERSEN AIR FORCE BASE
GUAM

FY24 AJJY183012 (P-012),
PDI: NORTH AIRCRAFT PARKING RAMP

ELECTRICAL DEMOLITION PLAN 2

SCALE: AS SHOWN

EPROJECTS NO.: 1665555

CONSTR CONTROL NO.

NAVFAC DRAWING NO. 17361888

SHEET 265 OF 377

ED102

REDESIGN FINAL SUBMITTAL

IF SHEET IS LESS THAN 22" X 34" REDUCED PRINT. USE GRAPHIC SCALES

FILE NAME: Z:\Clients\ANF\USNavy\Pac\133097_GuamP012NAR\Design\Elec\Sheets\P012_1665555_ED101-ED102.dwg
LAYOUT NAME: ED102
PLOTTED: 01/14/2026 9:20am
USER: bdpinkley

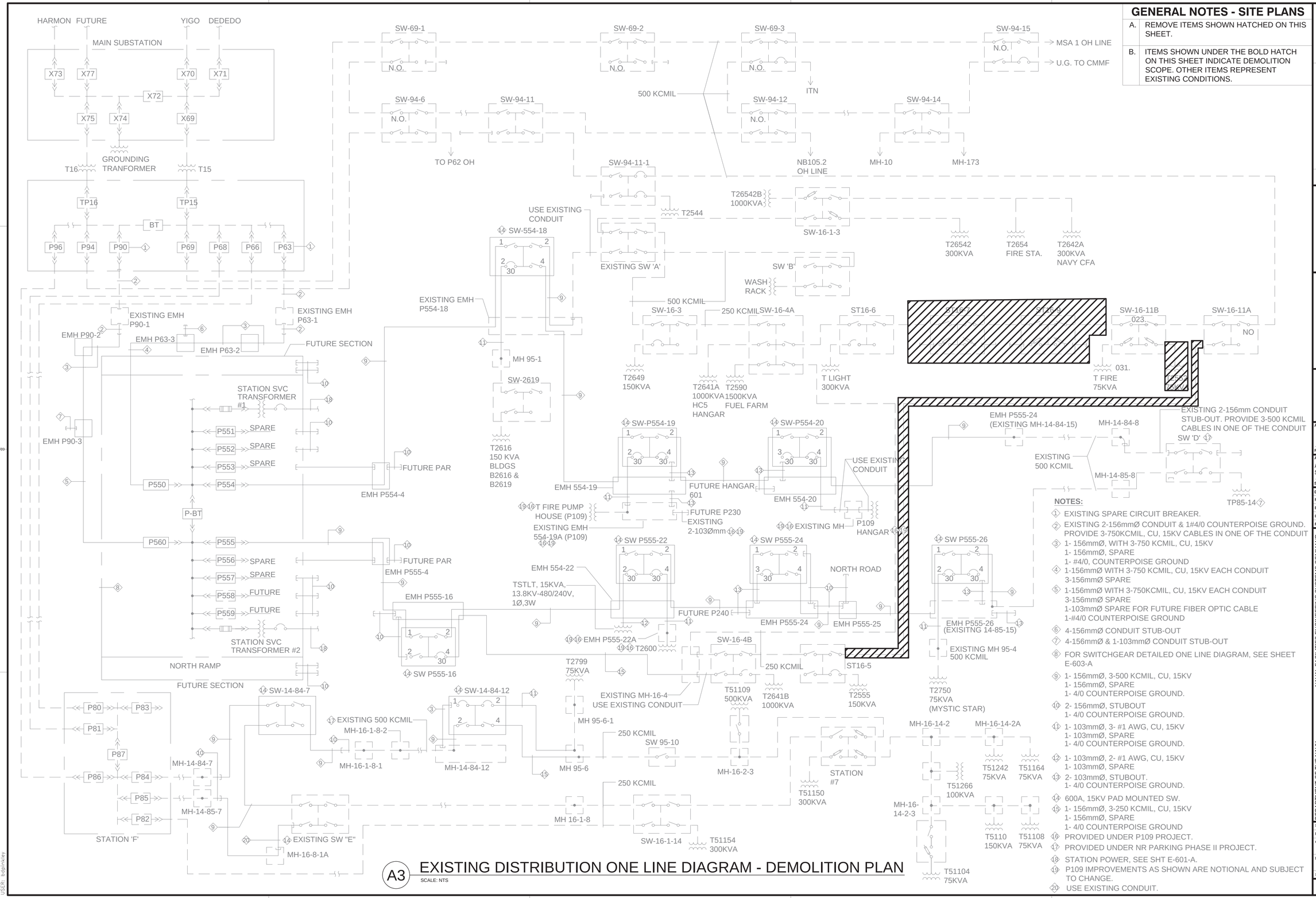

A3 EXISTING DISTRIBUTION ONE LINE DIAGRAM - DEMOLITION PLAN

SCALE: NTS

GENERAL NOTES - SITE PLANS

A. REMOVE ITEMS SHOWN HATCHED ON THIS SHEET.

B. ITEMS SHOWN UNDER THE BOLD HATCH ON THIS SHEET INDICATE DEMOLITION SCOPE. OTHER ITEMS REPRESENT EXISTING CONDITIONS.

NOTES:

1. EXISTING SPARE CIRCUIT BREAKER.
2. EXISTING 2-156mmØ CONDUIT & 1#4/0 COUNTERPOISE GROUND. PROVIDE 3-750KCMIL, CU, 15KV CABLES IN ONE OF THE CONDUIT
3. 1- 156mmØ, WITH 3-750 KCMIL, CU, 15KV
   1- 156mmØ, SPARE
   1- #4/0, COUNTERPOISE GROUND
4. 1-156mmØ WITH 3-750 KCMIL, CU, 15KV EACH CONDUIT
   3-156mmØ SPARE
5. 1-156mmØ WITH 3-750KCMIL, CU, 15KV EACH CONDUIT
   3-156mmØ SPARE
   1-103mmØ SPARE FOR FUTURE FIBER OPTIC CABLE
   1-#4/0 COUNTERPOISE GROUND
6. 4-156mmØ CONDUIT STUB-OUT
7. 4-156mmØ & 1-103mmØ CONDUIT STUB-OUT
8. FOR SWITCHGEAR DETAILED ONE LINE DIAGRAM, SEE SHEET E-603-A
9. 1- 156mmØ, 3-500 KCMIL, CU, 15KV
   1- 156mmØ, SPARE
   1- 4/0 COUNTERPOISE GROUND.
10. 2- 156mmØ, STUBOUT
    1- 4/0 COUNTERPOISE GROUND.
11. 1- 103mmØ, 3- #1 AWG, CU, 15KV
    1- 103mmØ, SPARE
    1- 4/0 COUNTERPOISE GROUND.
12. 1- 103mmØ, 2- #1 AWG, CU, 15KV
    1- 103mmØ, SPARE
13. 2- 103mmØ, STUBOUT.
    1- 4/0 COUNTERPOISE GROUND.
14. 600A, 15KV PAD MOUNTED SW.
15. 1- 156mmØ, 3-250 KCMIL, CU, 15KV
    1- 156mmØ, SPARE
    1- 4/0 COUNTERPOISE GROUND
16. PROVIDED UNDER P109 PROJECT.
17. PROVIDED UNDER NR PARKING PHASE II PROJECT.
18. STATION POWER, SEE SHT E-601-A.
19. P109 IMPROVEMENTS AS SHOWN ARE NOTIONAL AND SUBJECT TO CHANGE.
20. USE EXISTING CONDUIT.

NAVFAC

STATE OF MISSOURI — STEVEN D. STRATTON — NUMBER PE-2006024920 — PROFESSIONAL ENGINEER

01/20/2026

SEAL

Jacobs / BURNS McDONNELL

JACOBS/B&M, A JOINT VENTURE
1100 NORTH GLEBE ROAD
SUITE 500
ARLINGTON, VA 22201

A/E Contract No. N62742-20-D-0002
A/E Task Order No. N6274221F0315
JED NO. 0342600

A/E INFO

APPROVED

FOR COMMANDER NAVFAC DATE 02/02/2026

ACTIVITY
AFIMSC APPROVAL PER NAVFAC SAT-TO CHECKLIST

SATISFACTORY TO DATE 31 DEC 2025

DES: DSB	DRW: BDP	REV: SDS
PM/DM		KKK
BRANCH MANAGER		SMK
CHIEF ENG/ARCH		SMK
FIRE PROTECTION		RO

DEPARTMENT OF THE NAVY
NAVFAC PACIFIC
NAVAL FACILITIES ENGINEERING SYSTEMS COMMAND
NAVAL FACILITIES ENGINEERING SYSTEMS COMMAND – PACIFIC
ANDERSEN AIR FORCE BASE
JOINT REGION MARIANAS (JRM)
GUAM

FY24 AJJY183012 (P-012),
PDI: NORTH AIRCRAFT PARKING RAMP

EXISTING DISTRIBUTION ONE LINE DIAGRAM - DEMOLITION PLAN

SCALE: AS SHOWN
EPROJECTS NO.: 1665555
CONSTR CONTROL NO.
NAVFAC DRAWING NO. 17361889
SHEET 266 OF 377

ED601

REDESIGN FINAL SUBMITTAL

IF SHEET IS LESS THAN 22" X 34" REDUCED PRINT, USE GRAPHIC SCALES

FILE NAME: Z:\Clients\ANF\USNavy\Pac\133097_GuamP012NAR\Design\Elec\Sheets\P012_1665555_ED601.dwg
LAYOUT NAME: Layout1
PLOTTED: 01/14/2026 9:20am
USER: bdpinkley

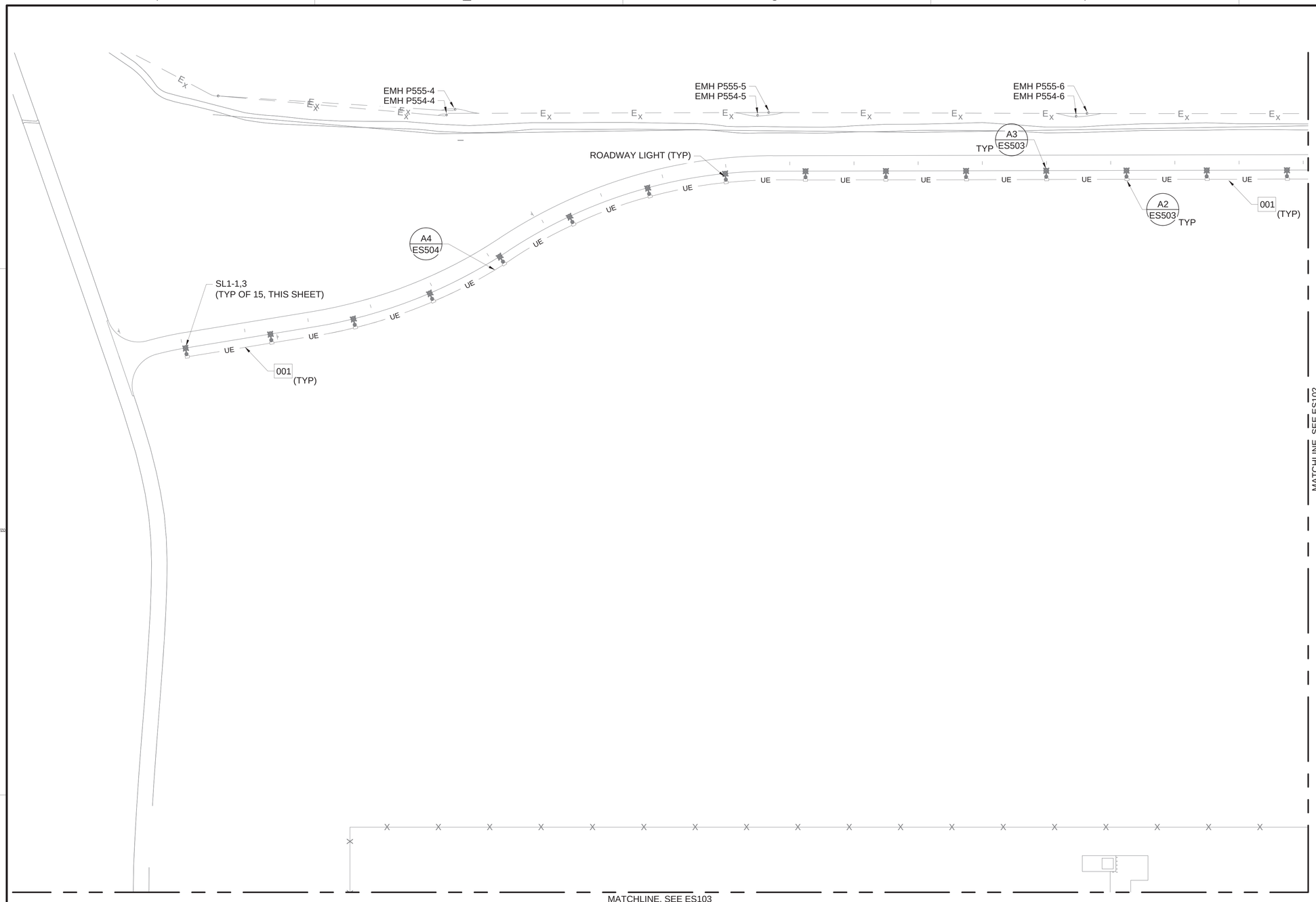

A1 ELECTRICAL SITE PLAN 1

SCALE 1" = 80'

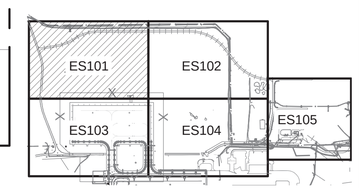

AREA KEY MAP

GENERAL NOTES - SITE PLANS

A.	SEE SHEETS E-001 & E-002 FOR ABBREVIATIONS, LEGENDS AND GENERAL NOTES.
B.	NOT ALL UTILITIES ARE SHOWN. LOCATE UTILITIES PRIOR TO START OF WORK.

KEYED NOTES

001.	PROVIDE 2-#6 AWG, #8 GND. IN 1" CONDUIT.

GRAPHIC SCALE

0 40' 80' 160'

SCALE: 1"=80'

NORTH ARROW

TRUE N

NAVFAC

STATE OF MISSOURI
STEVEN D. STRATTON
NUMBER
PE-2006024920
PROFESSIONAL ENGINEER

01/20/2026

SEAL

Jacobs / BURNS McDONNELL

JACOBS/B&M, A JOINT VENTURE
1100 NORTH GLEBE ROAD
SUITE 500
ARLINGTON, VA 22201

A/E Contract No. N62742-20-D-0002
A/E Task Order No. N6274221F0315
JCG NO. 0343806/3

A/E INFO

APPROVED

FOR COMMANDER NAVFAC DATE 02/02/2026

ACTIVITY
AFIMSC APPROVAL PER NAVFAC SAT-TO CHECKLIST

SATISFACTORY TO DATE 31 DEC 2025

DES:	DSB	DRW:	BDP
REV:	SDS		

PM/DM	KKK
BRANCH MANAGER	SMK
CHIEF ENG/ARCH	SMK
FIRE PROTECTION	RO

DEPARTMENT OF THE NAVY
NAVAL FACILITIES ENGINEERING SYSTEMS COMMAND
NAVFAC PACIFIC
NAVAL FACILITIES ENGINEERING SYSTEMS COMMAND – PACIFIC
JOINT REGION MARIANAS (JRM)
ANDERSEN AIR FORCE BASE
GUAM

FY24 AJJY183012 (P-012),
PDI: NORTH AIRCRAFT PARKING RAMP

ELECTRICAL SITE PLAN 1

SCALE: AS SHOWN
EPROJECTS NO.: 1665555
CONSTR CONTROL NO.
NAVFAC DRAWING NO. 17361890
SHEET 267 OF 377

ES101

REDESIGN FINAL SUBMITTAL

IF SHEET IS LESS THAN 22" X 34"
REDUCED PRINT. USE GRAPHIC SCALES

FILE NAME: Z:\Clients\ANF\USNavy\Poc\133097_GuamP012NAR\Design\Elec\Sheets\P012_1665555_ES101-ES104.dwg
LAYOUT NAME: ES101
PLOTTED: 01/14/2026 9:21am
USER: bdpinkley

9/20/2026

GENERAL NOTES - SITE PLANS

A.	SEE SHEETS E-001 & E-002 FOR ABBREVIATIONS, LEGENDS AND GENERAL NOTES.
B.	NOT ALL UTILITIES ARE SHOWN. LOCATE UTILITIES PRIOR TO START OF WORK.

KEYED NOTES

001.	PROVIDE 2-#6 AWG, #8 GND. IN 1" CONDUIT.

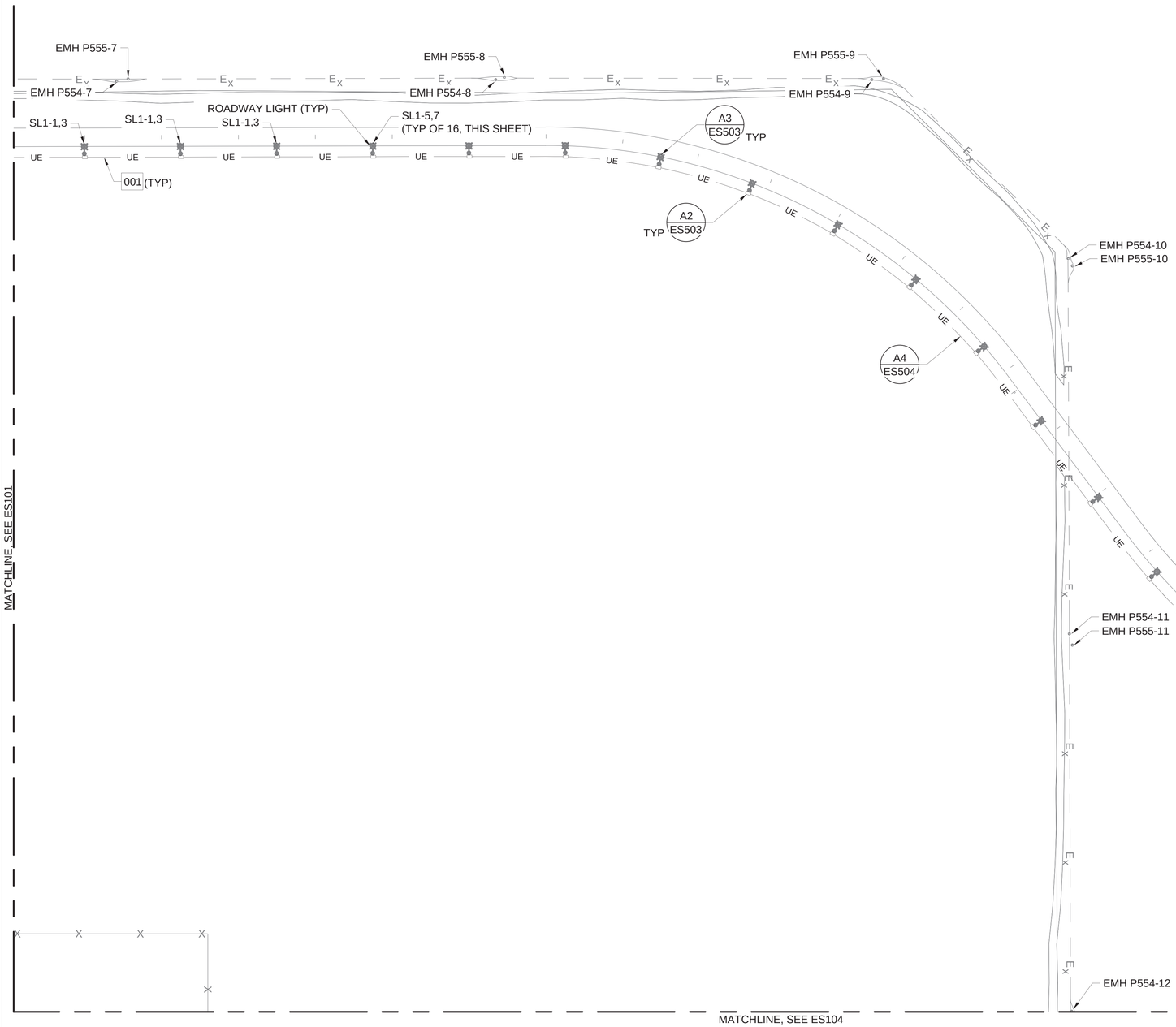

A1 ELECTRICAL SITE PLAN 2

SCALE 1" = 80'

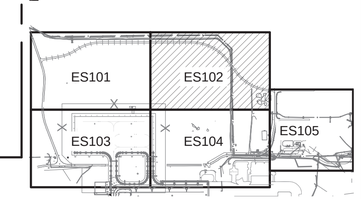

AREA KEY MAP

GRAPHIC SCALE

0 40' 80' 160'

SCALE: 1"=80'

NORTH ARROW

TRUE N

NAVFAC

STATE OF MISSOURI
STEVEN D. STRATTON
NUMBER
PE-2006024920
PROFESSIONAL ENGINEER

01/20/2026

SEAL

Jacobs / BURNS McDONNELL

JACOBS/B&M, A JOINT VENTURE
1100 NORTH GLEBE ROAD
SUITE 500
ARLINGTON, VA 22201

A/E Contract No. N62742-20-D-0002
A/E Task Order No. N62742-21F0315
JCG NO. D2430603

A/E INFO

APPROVED

FOR COMMANDER NAVFAC DATE 02/02/2026

ACTIVITY
AFIMSC APPROVAL PER NAVFAC SAT-TO CHECKLIST

SATISFACTORY TO DATE 31 DEC 2025

DES: DSB	DRW: BDP	REV: SDS	
PM/DM			KKK
BRANCH MANAGER			SMK
CHIEF ENG/ARCH			SMK
FIRE PROTECTION			RO

DEPARTMENT OF THE NAVY
NAVAL FACILITIES ENGINEERING SYSTEMS COMMAND
NAVFAC PACIFIC
NAVAL FACILITIES ENGINEERING SYSTEMS COMMAND – PACIFIC
JOINT REGION MARIANAS (JRM)
ANDERSEN AIR FORCE BASE
GUAM

FY24 AJJY183012 (P-012),
PDI: NORTH AIRCRAFT PARKING RAMP

ELECTRICAL SITE PLAN 2

SCALE: AS SHOWN
EPROJECTS NO. 1665555
CONSTR CONTROL NO.
NAVFAC DRAWING NO. 17361891
SHEET 268 OF 377

ES102

REDESIGN FINAL SUBMITTAL

IF SHEET IS LESS THAN 22" X 34" REDUCED PRINT. USE GRAPHIC SCALES

FILE NAME: Z:\Clients\AMF\USNavy\Pac\133097_GuamP012NAR\Design\Elec\Sheets\P012_1665555_ES101-ES104.dwg
LAYOUT NAME: ES102
PLOTTED: 01/14/2026 9:21am
USER: bdpinkley

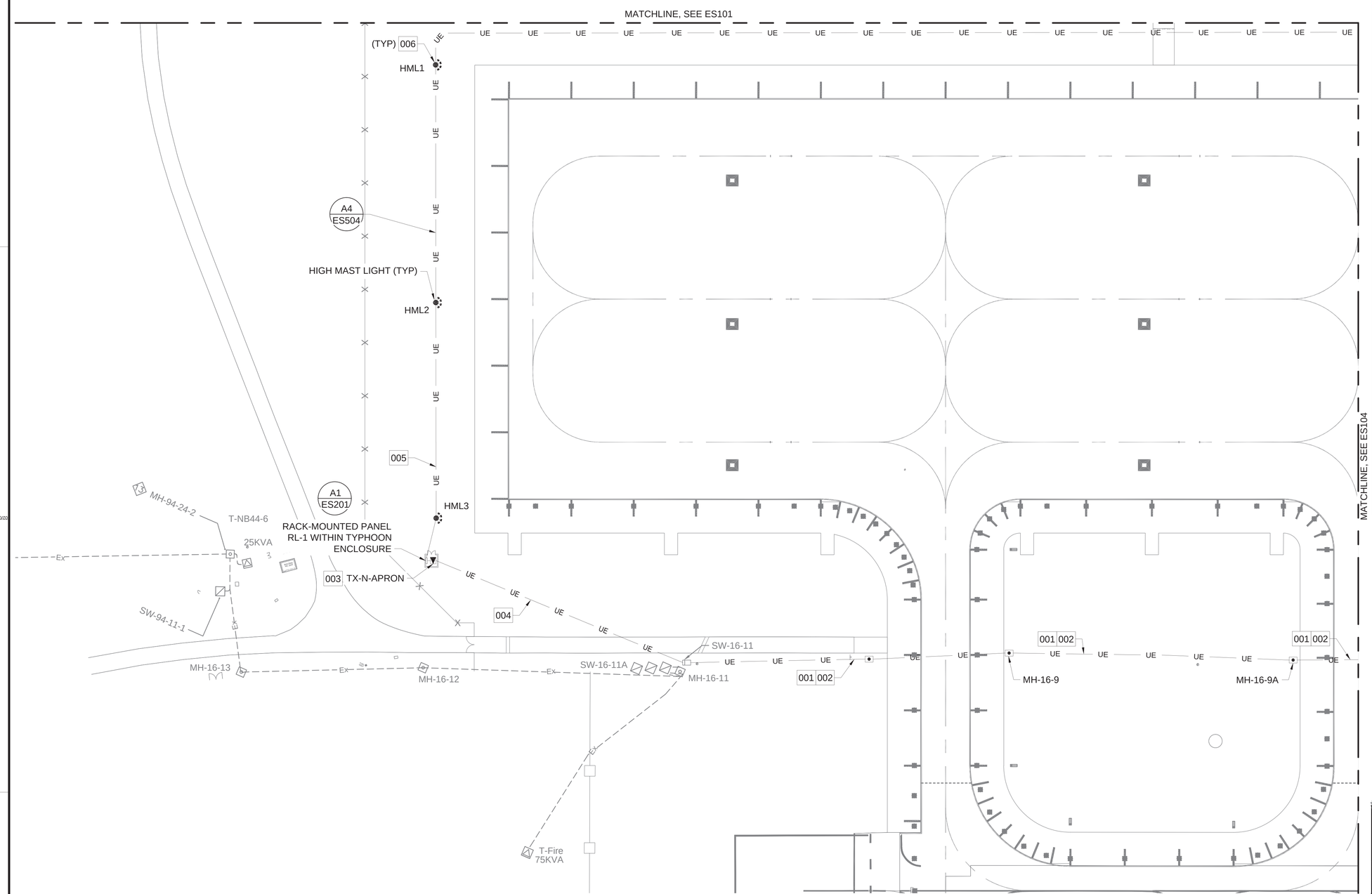

A1 ELECTRICAL SITE PLAN 3

SCALE 1" = 80'

GENERAL NOTES - SITE PLANS

A. SEE SHEETS E-001 & E-002 FOR ABBREVIATIONS, LEGENDS AND GENERAL NOTES.

B. NOT ALL UTILITIES ARE SHOWN. LOCATE UTILITIES PRIOR TO START OF WORK.

C. SPARE CONDUITS MUST BE PROVIDED WITH A PULL ROPE.

KEYED NOTES

001. PROVIDE 1-6" CONDUIT WITH 3-500 KCMIL, CU, 15 KV CABLE FROM EXISTING SWITCH ST16-5 TO EXISTING SWITCH SW-16-11, 1-6" SPARE CONDUIT, 1-#4/0 COUNTERPOISE GROUND FOR FEEDER P-90.

002. PROVIDE 1-6" CONDUIT WITH 3-500 KCMIL, CU, 15 KV CABLE FROM EXISTING SWITCH ST16-6 TO EXISTING SWITCH SW-16-11; 1-6" SPARE CONDUIT, 1-#4/0 COUNTERPOISE GROUND FOR FEEDER P-94.

003. PROVIDE 75KVA 13.8KV-480/277V PADMOUNT TRANSFORMER, LOCATED WITHIN TYPHOON ENCLOSURE. REFER TO ARCHITECTURAL PLANS FOR ENLARGED PLANS. KTR MUST COORDINATE WITH TRANSFORMER PROCURED TO ENSURE HOOK STICK CLEARANCE IS PROVIDED IN FRONT OF THE TRANSFORMER. UTILITY TO PROVIDE KILOWATT METER WITHIN ENCLOSURE.

004. PROVIDE 1-2" CONDUIT WITH 3-#2 AWG FROM EXISTING SW-16-11 TO 75KVA TRANSFORMER.

005. PROVIDE 1-2" CONDUIT WITH 2-#8AWG AND 1-#10GND FOR HIGH MAST LIGHTS.

006. HIGH MAST LIGHT POLE MUST HAVE A REMOTE DRIVER CABINET MOUNTED TO POLE. HEIGHT TO THE TOP OF THE CABINET MUST NOT EXCEED 6 FEET. CABINET MUST FACE TOWARD THE APRON (PLAN-EAST).

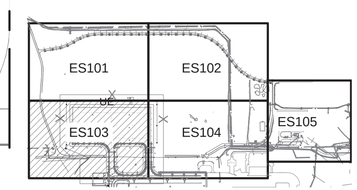

AREA KEY MAP

GRAPHIC SCALE

0 40' 80' 160'

SCALE: 1"=80'

NORTH ARROW

TRUE N

NAVFAC

STATE OF MISSOURI
STEVEN D. STRATTON
NUMBER PE-2006024920
PROFESSIONAL ENGINEER
01/20/2026
SEAL

Jacobs / BURNS & McDONNELL
JACOBS/B&M, A JOINT VENTURE
1100 NORTH GLEBE ROAD
SUITE 500
ARLINGTON, VA 22201

A/E Contract No. N62742-20-D-0002
A/E Task Order No. N62742-21F0315
JCG NO. D343003
A/E INFO

APPROVED
FOR COMMANDER NAVFAC DATE 02/02/2026

ACTIVITY
AFIMSC APPROVAL PER NAVFAC SAT-TO CHECKLIST

SATISFACTORY TO DATE 31 DEC 2025

DES: DSB DRW: BDP REV: SDS
PM/DM KKK
BRANCH MANAGER SMK
CHIEF ENG/ARCH SMK
FIRE PROTECTION RO

DEPARTMENT OF THE NAVY
NAVFAC PACIFIC
NAVAL FACILITIES ENGINEERING SYSTEMS COMMAND
NAVAL FACILITIES ENGINEERING SYSTEMS COMMAND – PACIFIC
JOINT REGION MARIANAS (JRM)
ANDERSEN AIR FORCE BASE
GUAM

FY24 AJJY183012 (P-012),
PDI: NORTH AIRCRAFT PARKING RAMP

ELECTRICAL SITE PLAN 3

SCALE: AS SHOWN
EPROJECTS NO.: 1665555
CONSTR CONTROL NO.
NAVFAC DRAWING NO. 17361892
SHEET 269 OF 377

ES103

REDESIGN FINAL SUBMITTAL

IF SHEET IS LESS THAN 22" X 34" REDUCED PRINT. USE GRAPHIC SCALES

FILE NAME: Z:\Clients\ANF\USNavy\Poc\133097_GuamP012NAR\Design\Elec\Sheets\P012_1665555_ES101-ES104.dwg
LAYOUT NAME: ES103
PLOTTED: 01/14/2026 9:22am
USER: bdpinkley

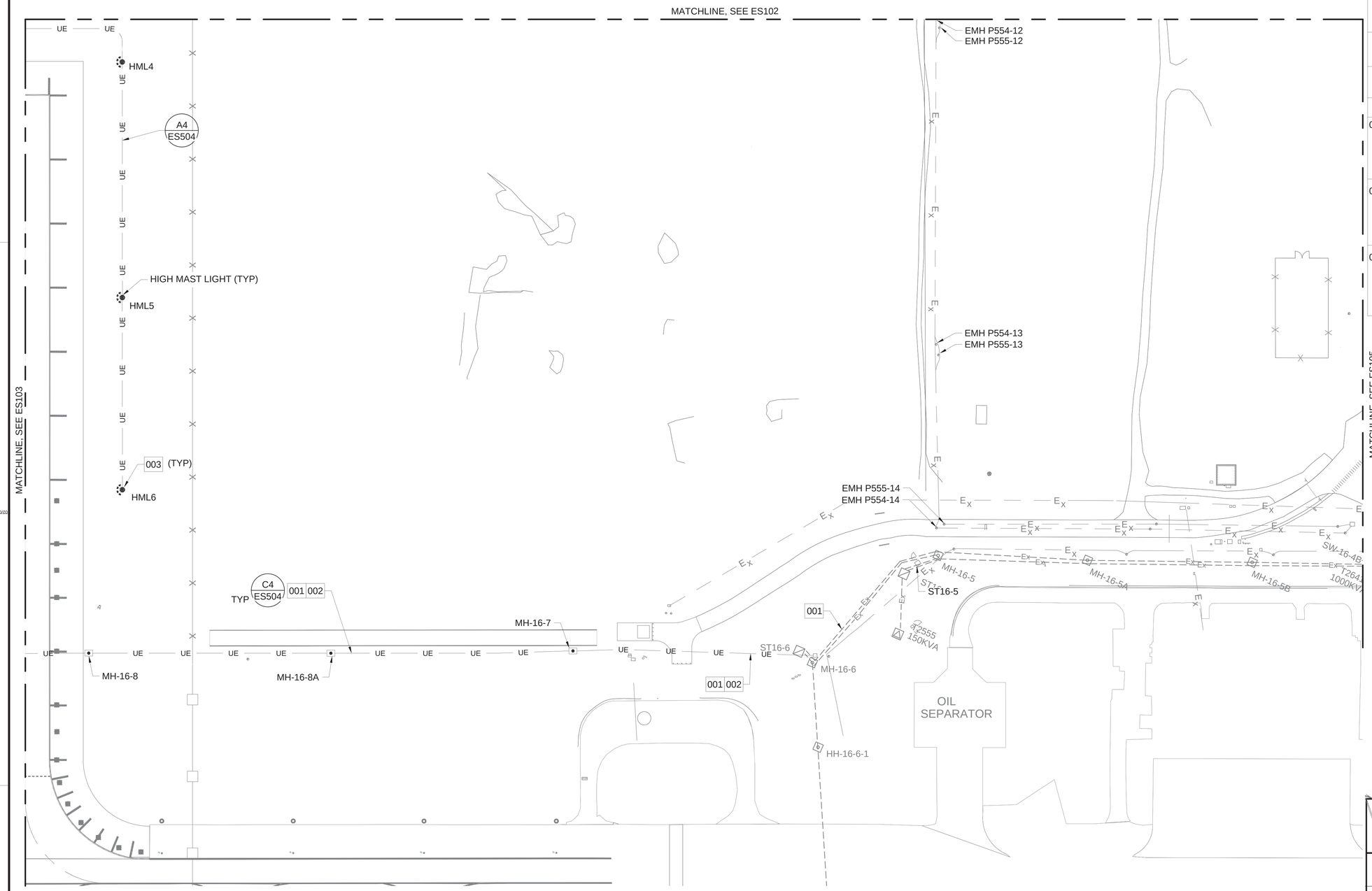

A1 ELECTRICAL SITE PLAN 4

SCALE 1" = 80'

GENERAL NOTES - SITE PLANS

A. SEE SHEETS E-001 & E-002 FOR ABBREVIATIONS, LEGENDS AND GENERAL NOTES.

B. NOT ALL UTILITIES ARE SHOWN. LOCATE UTILITIES PRIOR TO START OF WORK.

C. SPARE CONDUITS MUST BE PROVIDED WITH A PULL ROPE.

KEYED NOTES

001. PROIVDE 1-6" CONDUIT WITH 3-500 KCMIL, CU, 15 KV CABLE FROM EXISTING SWITCH ST16-5 TO EXISTING SWITCH SW-16-11; 1-6" SPARE CONDUIT; 1-#4/0 COUNTERPOISE GROUND FOR FEEDER P-90.

002. PROIVDE 1-6" CONDUIT WITH 3-500 KCMIL, CU, 15 KV CABLE FROM EXISTING SWITCH ST16-6 TO EXISTING SWITCH SW-16-11; 1-6" SPARE CONDUIT; 1-#4/0 COUNTERPOISE GROUND FOR FEEDER P-94.

003. HIGH MAST LIGHT POLE MUST HAVE A REMOTE DRIVER CABINET MOUNTED TO POLE. HEIGHT TO THE TOP OF THE CABINET MUST NOT EXCEED 6 FEET. CABINET MUST FACE TOWARD THE APRON (PLAN-WEST).

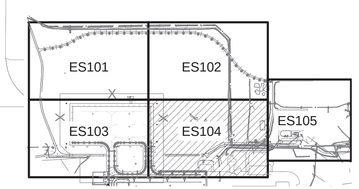

AREA KEY MAP

GRAPHIC SCALE

0 40' 80' 160'

SCALE: 1"=80'

NORTH ARROW

TRUE N

STATE OF MISSOURI
STEVEN D. STRATTON
NUMBER PE-2006024920
PROFESSIONAL ENGINEER
01/20/2026
SEAL

Jacobs / BURNS McDONNELL
JACOBS/B&M, A JOINT VENTURE
1100 NORTH GLEBE ROAD
SUITE 500
ARLINGTON, VA 22201

A/E Contract No. N62742-20-D-0002
A/E Task Order No. N6274221F0315
JCG NO. 01A38003

A/E INFO

APPROVED
Eva Mize
FOR COMMANDER NAVFAC DATE 02/02/2026

ACTIVITY
AFIMSC APPROVAL PER NAVFAC SAT-TO CHECKLIST

SATISFACTORY TO DATE 31 DEC 2025

DES: DSB	DRW: BDP REV: SDS
PM/DM	KKK
BRANCH MANAGER	SMK
CHIEF ENG/ARCH	SMK
FIRE PROTECTION	RO

DEPARTMENT OF THE NAVY
NAVFAC PACIFIC
NAVAL FACILITIES ENGINEERING SYSTEMS COMMAND
NAVAL FACILITIES ENGINEERING SYSTEMS COMMAND ~ PACIFIC
JOINT REGION MARIANAS (JRM)
ANDERSEN AIR FORCE BASE
GUAM

FY24 AJJY183012 (P-012),
PDI: NORTH AIRCRAFT PARKING RAMP

ELECTRICAL SITE PLAN 4

SCALE: AS SHOWN
EPROJECTS NO.: 1665555
CONSTR CONTROL NO.
NAVFAC DRAWING NO. 17361893
SHEET 270 OF 377

ES104

REDESIGN FINAL SUBMITTAL

IF SHEET IS LESS THAN 22" X 34" REDUCED PRINT. USE GRAPHIC SCALES

FILE NAME: Z:\Clients\ANF\USNavy\Poc\133097_GuamP012NAR\Design\Elec\Sheets\P012_1665555_ES101-ES104.dwg
LAYOUT NAME: ES104
PLOTTED: 01/14/2026 10:01am
USER: bdpinkley

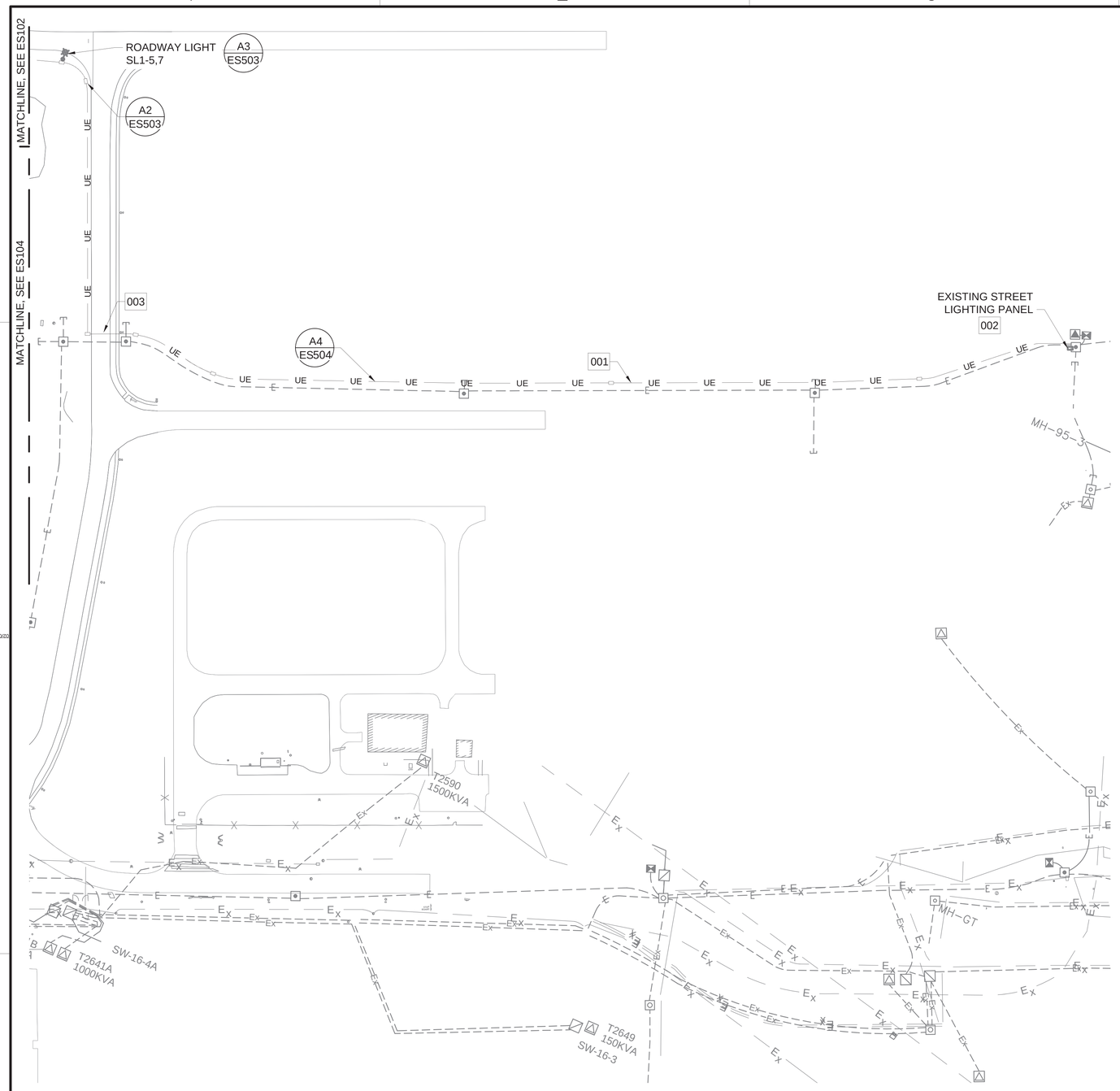

A1 ELECTRICAL SITE PLAN 5

SCALE 1" = 80'

GENERAL NOTES - SITE PLANS

A.	SEE SHEETS E-001 & E-002 FOR ABBREVIATIONS, LEGENDS AND GENERAL NOTES.
B.	NOT ALL UTILITIES ARE SHOWN. LOCATE UTILITIES PRIOR TO START OF WORK.

KEYED NOTES

001.	PROVIDE 2-#6 AWG, #10 GND. IN 1" CONDUIT.
002.	TERMINATE STREET LIGHTING CIRCUIT ON EXISTING PANELBOARD "ST". PROVIDE 2P, 208V, 30A BREAKER EXISTING SPACE.
003.	WHERE CONDUIT CROSSES EXISTING PAVEMENT, SAWCUT EXISTING PAVEMENT AND PATCH.

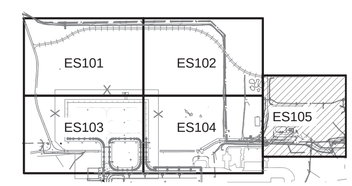

AREA KEY MAP

GRAPHIC SCALE

0 40' 80' 160'

SCALE: 1"=80'

NORTH ARROW

TRUE N

NAVFAC

STATE OF MISSOURI
STEVEN D. STRATTON
NUMBER PE-2006024920
PROFESSIONAL ENGINEER

01/20/2026

SEAL

Jacobs / BURNS McDONNELL

JACOBS/B&M, A JOINT VENTURE
1100 NORTH GLEBE ROAD
SUITE 500
ARLINGTON, VA 22201

A/E Contract No. N62742-20-D-0002
A/E Task Order No. N6274221F0315
JCG NO. 234326003

A/E INFO

APPROVED

FOR COMMANDER NAVFAC DATE 02/02/2026

ACTIVITY

AFIMSC APPROVAL PER NAVFAC SAT-TO CHECKLIST

SATISFACTORY TO DATE 31 DEC 2025

DES: DSB	DRW: BDP	REV: SDS	
PM/DM			KKK
BRANCH MANAGER			SMK
CHIEF ENG/ARCH			SMK
FIRE PROTECTION			RO

DEPARTMENT OF THE NAVY
NAVFAC PACIFIC
ANDERSEN AIR FORCE BASE

NAVAL FACILITIES ENGINEERING SYSTEMS COMMAND
NAVAL FACILITIES ENGINEERING SYSTEMS COMMAND – PACIFIC
JOINT REGION MARIANAS (JRM)

GUAM

FY24 AUY183012 (P-012),
PDI: NORTH AIRCRAFT PARKING RAMP

ELECTRICAL SITE PLAN 5

SCALE: AS SHOWN
EPROJECTS NO.: 1665555
CONSTR CONTROL NO.
NAVFAC DRAWING NO. 17361894
SHEET 271 OF 377

ES105

REDESIGN FINAL SUBMITTAL

FILE NAME: Z:\Clients\ANF\USNavy\Proc\153097_GuamP012NAR\Design\Elec\Sheets\P012_1665555_ES101-ES104.dwg
LAYOUT NAME: ES105
PLOTTED: 01/14/2026 9:22am
USER: bdpinkey

IF SHEET IS LESS THAN 22" X 34" REDUCED PRINT. USE GRAPHIC SCALES

GENERAL NOTES

A.	ENCLOSURES MUST BE NEMA 4X RATED, STAINLESS STEEL.
B.	WORK ASSOCIATED WITH AIRCRAFT SHELTER MUST BE ASSOCIATED WITH BID OPTION 0005.

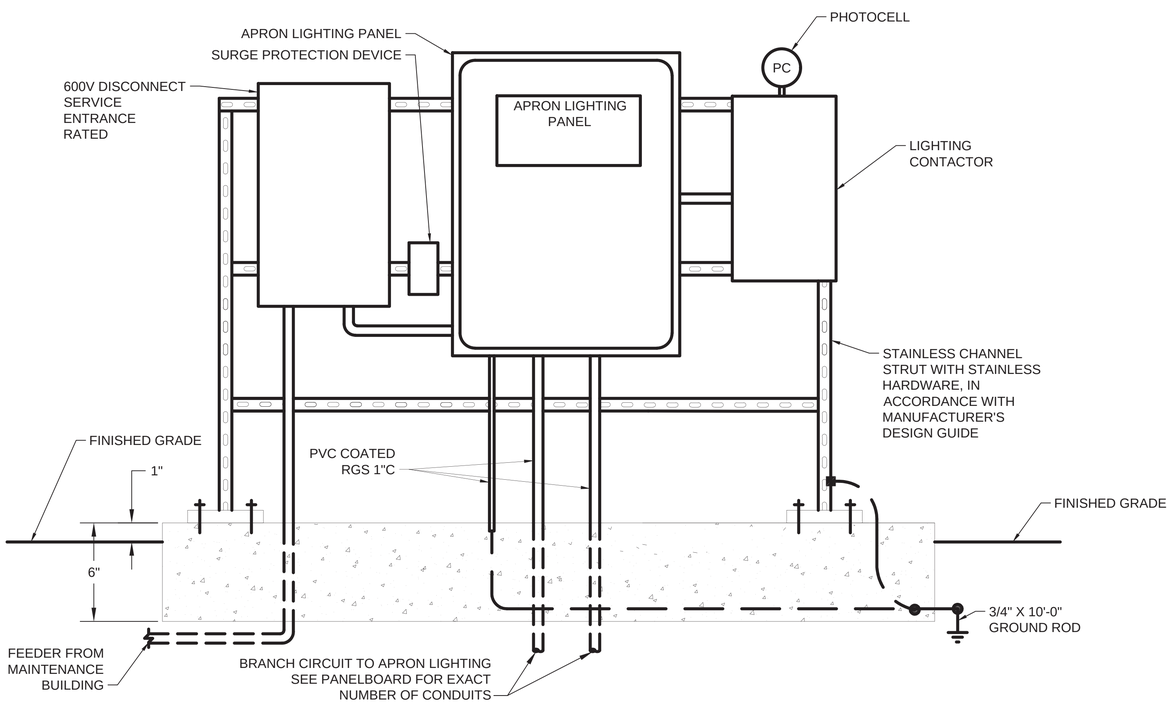

NOTES:

1. APRON RACK IS FACING NORTH.

A1 APRON RACK ELEVATION

SCALE: NTS

STATE OF MISSOURI
STEVEN D. STRATTON
NUMBER
PE-2006024920
PROFESSIONAL ENGINEER

01/20/2026

SEAL

Jacobs / BURNS & McDONNELL
JACOBS/B&M, A JOINT VENTURE
1100 NORTH GLEBE ROAD
SUITE 500
ARLINGTON, VA 22201

A/E Contract No. N62742-20-D-0002
A/E Task Order No. N62742231F0315
JCG NO. D3430603

A/E INFO

APPROVED

FOR COMMANDER NAVFAC DATE 03/02/2026

ACTIVITY
AFIMSC APPROVAL PER NAVFAC SAT-TO CHECKLIST

SATISFACTORY TO DATE 31 DEC 2025

DES: DSB	DRW: BDP	REV: SDS	
PM/OM			KKK
BRANCH MANAGER			SMK
CHIEF ENG/ARCH			SMK
FIRE PROTECTION			RO

DEPARTMENT OF THE NAVY
NAVAL FACILITIES ENGINEERING SYSTEMS COMMAND
NAVFAC PACIFIC
NAVAL FACILITIES ENGINEERING SYSTEMS COMMAND – PACIFIC
JOINT REGION MARIANAS (JRM)
ANDERSEN AIR FORCE BASE
GUAM

FY24 AJJY183012 (P-012),
PDI: NORTH AIRCRAFT PARKING RAMP

ELECTRICAL ELEVATIONS - BLDG. A

SCALE: AS SHOWN
EPROJECTS NO.: 1665555
CONSTR CONTROL NO.

NAVFAC DRAWING NO.
17361895

SHEET 272 OF 377

ES201

REDESIGN FINAL SUBMITTAL

IF SHEET IS LESS THAN 22" X 34"
REDUCED PRINT. USE GRAPHIC SCALES

FILE NAME: Z:\Clients\ANF\USNavy\Pac\133097_GuamP012NAR\Design\Elec\Sheets\P012_1665555_ES201.dwg
LAYOUT NAME: ES201
PLOTTED: 01/14/2026 9:22am
USER: bdrinkley

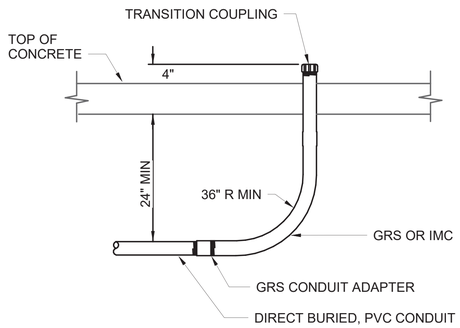

C1 DIRECT BURIED STUBBED CONDUIT RISER

SCALE:NTS

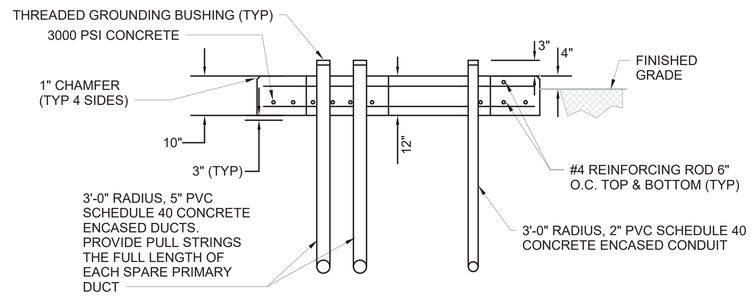

C3 TRANSFORMER SECTION

SCALE:NTS

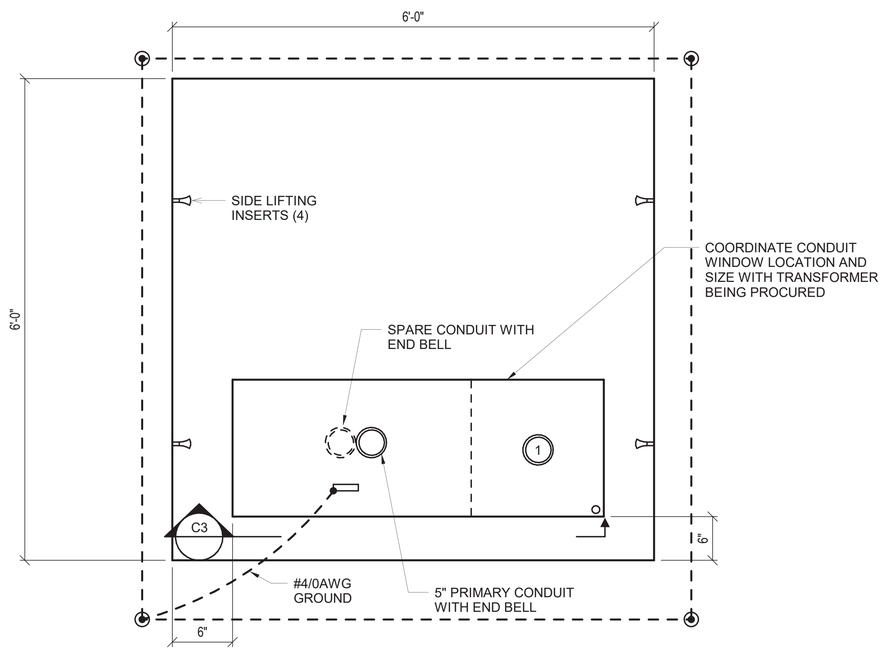

NOTES:

1. COORDINATE FINAL PAD SIZE WITH TRANSFORMER BEING PROVIDED.

A1 3-PHASE PADMOUNTED TRANSFORMER INSTALLATION

SCALE:NTS

SYM	DESCRIPTION	DATE

NAVFAC

STATE OF MISSOURI
STEVEN D. STRATTON
NUMBER PE-2006024920
PROFESSIONAL ENGINEER
01/20/2026
SEAL

Jacobs / BURNS McDONNELL

JACOBS/B&M, A JOINT VENTURE
1100 NORTH GLEBE ROAD
SUITE 500
ARLINGTON, VA 22201

A/E Contract No. N62742-20-D-0002
A/E Task Order No. N62742-FE015
JCO NO. CIA00003

A/E INFO

APPROVED
Erica Mizpa
FOR COMMANDER NAVFAC DATE 02/02/2026

ACTIVITY
AFIMSC APPROVAL PER NAVFAC SAT-TO CHECKLIST

SATISFACTORY TO DATE 31 DEC 2025

DES: DSB	DRW: BDP	REV: SDS
PM/DM		KKK
BRANCH MANAGER		SMK
CHIEF ENG/ARCH		SMK
FIRE PROTECTION		RO

DEPARTMENT OF THE NAVY
NAVAL FACILITIES ENGINEERING SYSTEMS COMMAND
NAVFAC PACIFIC
NAVAL FACILITIES ENGINEERING SYSTEMS COMMAND ~ PACIFIC
JOINT REGION MARIANAS (JRM)
ANDERSEN AIR FORCE BASE
GUAM

FY24 AJJY183012 (P-012),
PDI: NORTH AIRCRAFT PARKING RAMP

ELECTRICAL SITE DETAILS

SCALE: AS SHOWN
EPROJECTS NO.: 1665555
CONSTR CONTROL NO.
NAVFAC DRAWING NO. 17361896
SHEET 273 OF 377

ES501

REDESIGN FINAL SUBMITTAL

FILE NAME: C:\Revit_Projects\133097_E_Central_bdpinkley@burnsmcd.com.rvt
LAYOUT NAME: ELECTRICAL SITE DETAILS
PLOTTED: 1/14/2026 9:24:59 AM
USER: BDP

IF SHEET IS LESS THAN 22" X 34"
REDUCED PRINT. USE GRAPHIC SCALES

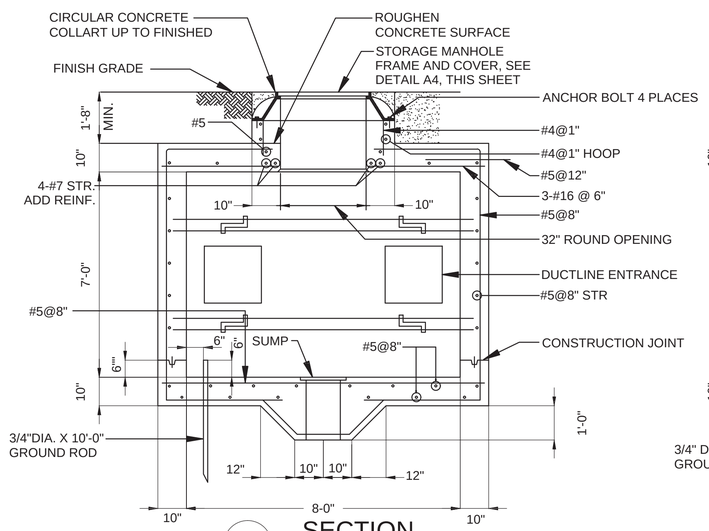

C1 SECTION
SCALE NTS

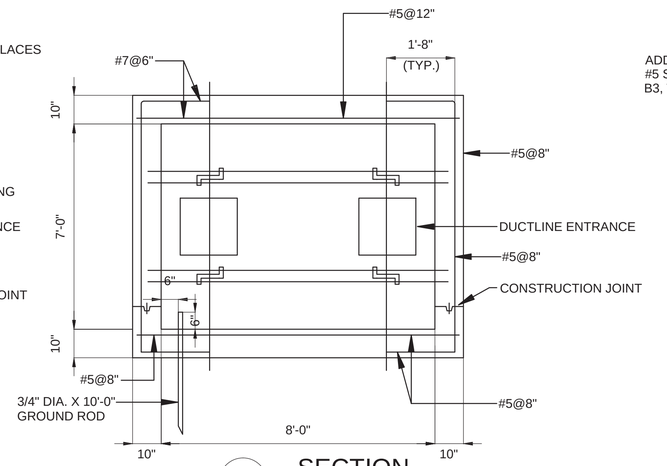

C3 SECTION
SCALE NTS

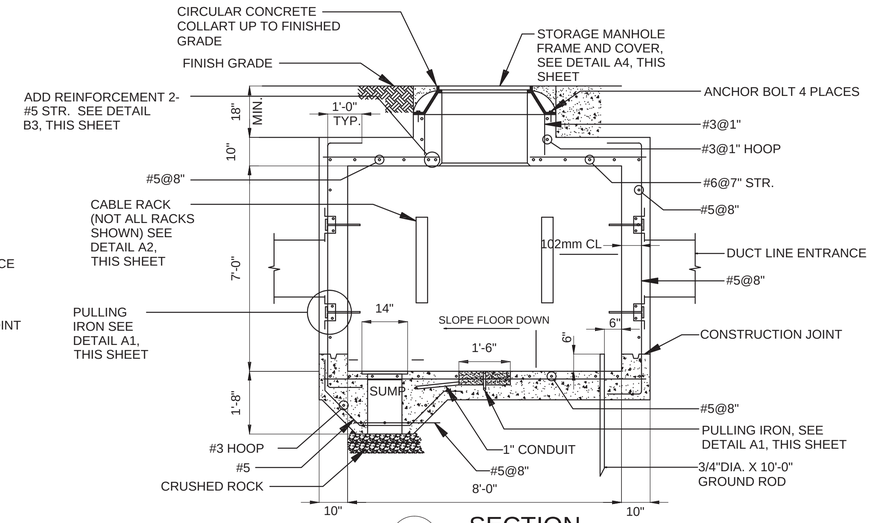

C4 SECTION
SCALE NTS

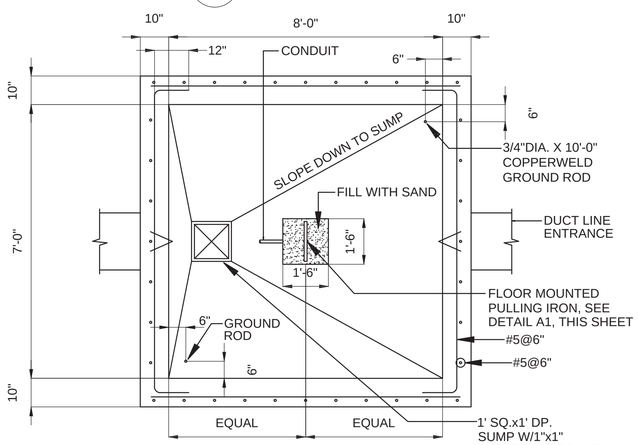

B1 SECTIONAL PLAN
SCALE NTS

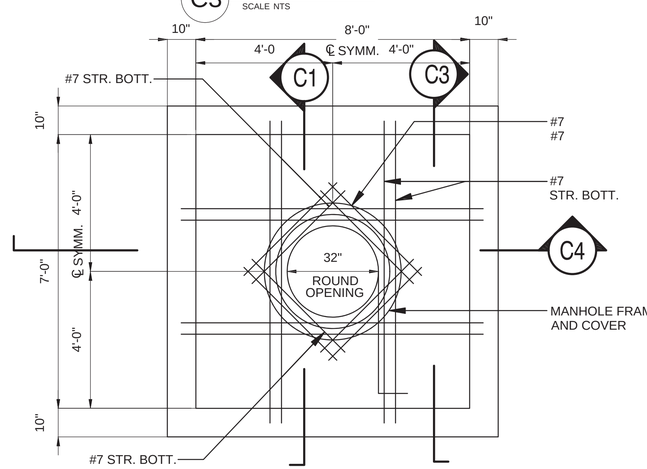

B3 TOP PLAN
SCALE NTS

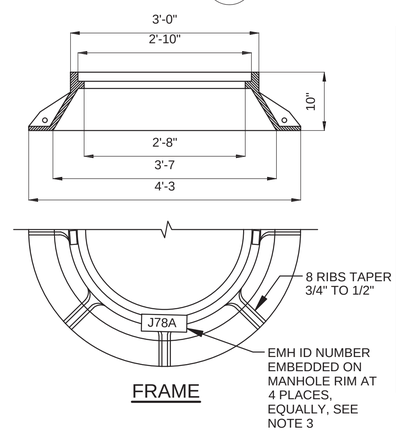

FRAME

CONSTRUCTION REQUIREMENTS

MINIMUM REINFORCING

1. BARS WILL BE A MINIMUM OF NO. 4 ROUND DEFORMED.
2. WALLS AND FLOOR WILL HAVE BARS AT 12 INCHES MINIMUM ON CENTERS WITH A MINIMUM 12 INCH HOOK AT CORNERS AND INTERSECTIONS.
3. THE TOP WILL HAVE BARS INSTALLED AT 4 INCHES ON CENTER MINIMUM LATERALLY AND LONGITUDINALLY, EXCEPT THAT AT OPENINGS ALSO PROVIDE AN ADDITIONAL BAR AT A TWO-INCH SPACING AND TWO DIAGONAL BARS, EACH WAY AT 45° TO AND LOCATED ABOVE LATERAL OR LONGITUDINAL BARS.
4. MANHOLE IDENTIFICATION MARKS MUST MEET 36 CES STANDARDS.

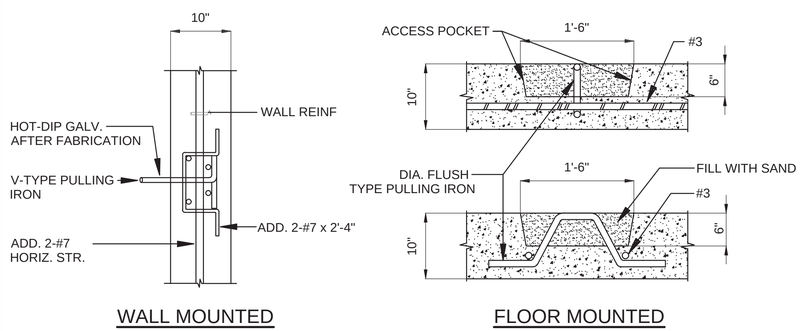

WALL MOUNTED

FLOOR MOUNTED

A1 SECTIONAL ELEVATION PULLING IRON DETAIL
SCALE NTS

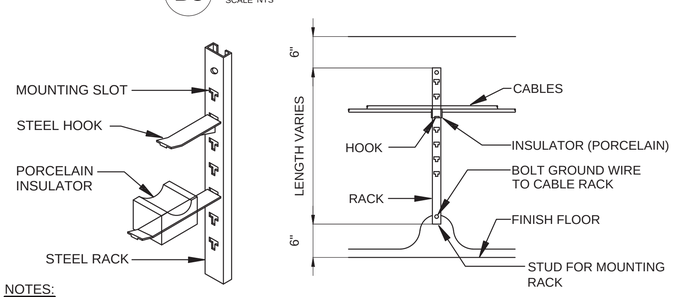

NOTES:

1. STEEL PARTS MUST BE HOT DIPPED GALVANIZED AFTER FABRICATION.
2. PROVIDE MINIMUM OF 2 CABLE RACKS PER WALL OF EACH HANDHOLE. PROVIDE ADDITIONAL RACKS IN EXISTING MANHOLES & HANDHOLES.

A3 CABLE RACK
SCALE NTS

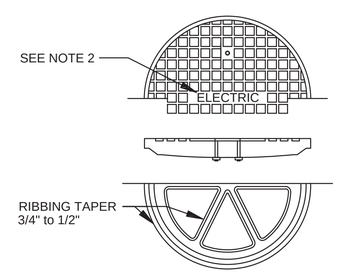

COVER

NOTES:

1. MANHOLE FRAMES AND COVERS MUST BE RATED FOR H2O WHEEL LOADS.
2. LETTER BLOCKS 1-1/4" WIDE, 2" HIGH LETTERS, 3/8" STROKE IDENTIFY AS "ELECTRIC"
3. COORDINATE WITH NAVFACMAR UTILITIES ON NUMBERING OF MANHOLES AND INSCRIPTION REQUIRED ON MANHOLE (RIM ON COVER) FOR IDENTIFICATION.
4. MANHOLE IDENTIFICATIONS MARKS MUST MEET 36 CES STANDARDS

A4 MANHOLE HARDWARE
SCALE NTS

##

NAVFAC

STATE OF MISSOURI
STEVEN D. STRATTON
NUMBER PE-2006024920
PROFESSIONAL ENGINEER
01/20/2026
SEAL

Jacobs / BURNS McDONNELL
JACOBS/B&M, A JOINT VENTURE
1100 NORTH GLEBE ROAD
SUITE 500
ARLINGTON, VA 22201

A/E Contract No. N62742-20-D-0002
A/E Task Order No. N6274221F0315
JCG NO. 234360603
A/E INFO

APPROVED
Eva Mizpe
FOR COMMANDER NAVFAC DATE 02/02/2026

ACTIVITY
AFIMSC APPROVAL PER NAVFAC SAT-TO CHECKLIST

SATISFACTORY TO DATE 31 DEC 2025

DES:	DRW:	REV:

PM/OM	KKK
BRANCH MANAGER	SMK
CHIEF ENG/ARCH	SMK
FIRE PROTECTION	RO

DEPARTMENT OF THE NAVY
NAVAL FACILITIES ENGINEERING SYSTEMS COMMAND
NAVFAC PACIFIC
NAVAL FACILITIES ENGINEERING SYSTEMS COMMAND – PACIFIC
JOINT REGION MARIANAS (JRM)
ANDERSEN AIR FORCE BASE
GUAM

FY24 AJJY183012 (P-012)
PDI: NORTH AIRCRAFT PARKING RAMP

ELECTRICAL SITE DETAILS

SCALE: AS SHOWN
EPROJECTS NO.: 1665555
CONSTR CONTROL NO.
NAVFAC DRAWING NO. 17361897
SHEET 274 OF 377

ES502

REDESIGN FINAL SUBMITTAL

IF SHEET IS LESS THAN 22" X 34" REDUCED PRINT. USE GRAPHIC SCALES

FILE NAME: \\bmcd\dfs\Clients\AMF\USNavy\Pac\133097_Guam\P012NAR\Design\Elec\Sheets\P012_1665555_ES502.dwg
LAYOUT NAME: Layout 1
PLOTTED: 01/14/2026 9:23am
USER: bdprinkley

KEYED NOTES

001.	MINIMUM CLEAR DISTANCE FROM EDGE OF ROAD PAVEMENT.

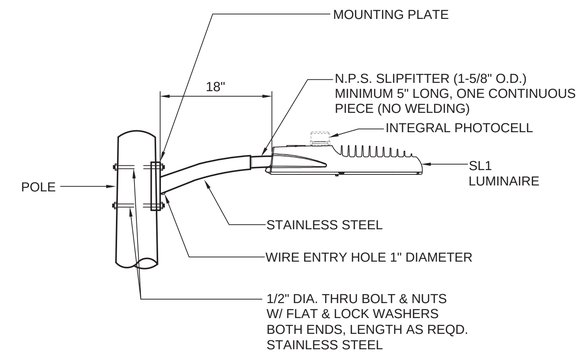

C4 MAST ARM CONCRETE POLE
SCALE: NTS

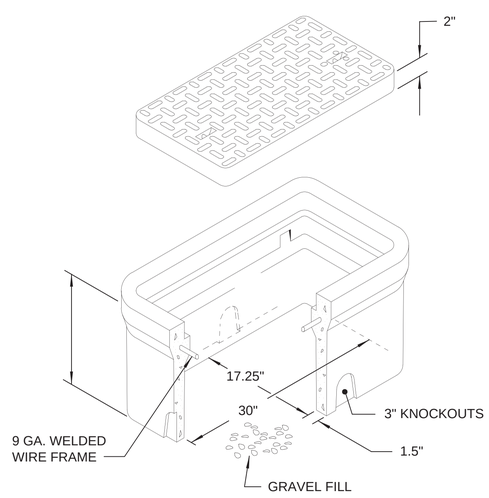

A2 PRECAST ELECTRICAL PULL BOX
SCALE: NTS

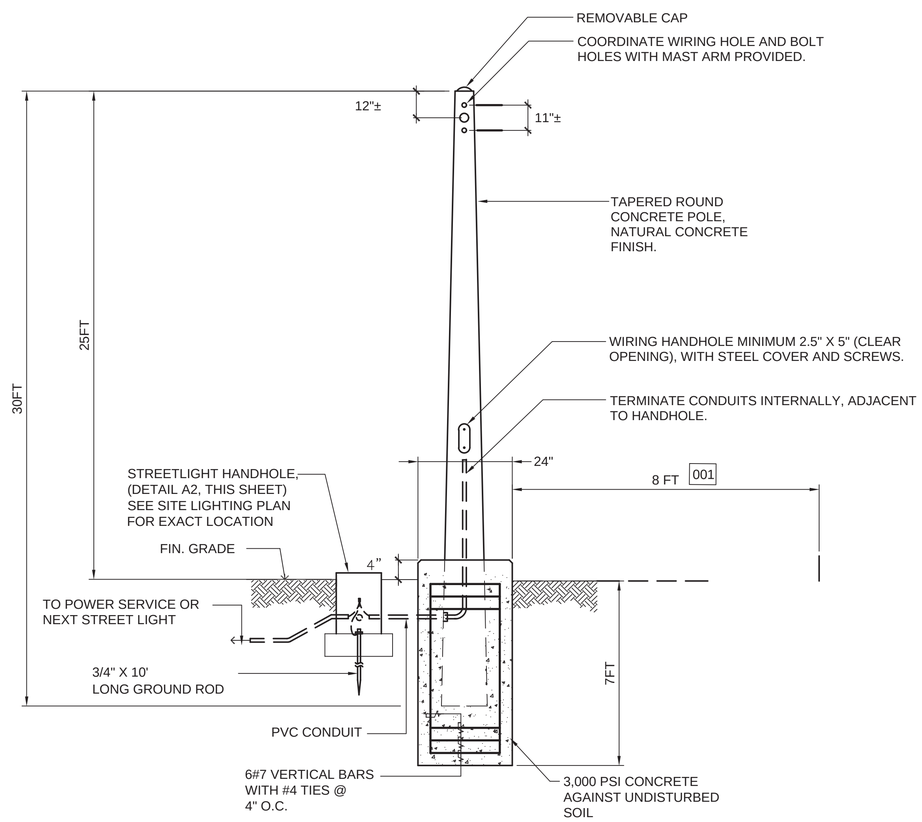

A3 ROUND CONCRETE POLE, STREET LIGHTING
SCALE: NTS

NAVFAC

STATE OF MISSOURI
STEVEN D. STRATTON
NUMBER
PE-2006024920
PROFESSIONAL ENGINEER
01/20/2026
SEAL

Jacobs / BURNS & McDONNELL
JACOBS/B&M, A JOINT VENTURE
1100 NORTH GLEBE ROAD
SUITE 500
ARLINGTON, VA 22201

A/E Contract No. N62742-20-D-0002
A/E Task Order No. N62742-23-F0015
JEG NO. D3430603
A/E INFO

APPROVED
FOR COMMANDER NAVFAC DATE 02/02/2026

ACTIVITY
AFI/MSC APPROVAL PER NAVFAC SAT-TO CHECKLIST

SATISFACTORY TO DATE 31 DEC 2025

DES:	DSB	DRW:	DSB	REV:	SDS
PM/DM					KKK
BRANCH MANAGER					SMK
CHIEF ENG/ARCH					SMK
FIRE PROTECTION					RO

DEPARTMENT OF THE NAVY
NAVAL FACILITIES ENGINEERING SYSTEMS COMMAND
NAVFAC PACIFIC
NAVAL FACILITIES ENGINEERING SYSTEMS COMMAND – PACIFIC
JOINT REGION MARIANAS (JRM)
ANDERSEN AIR FORCE BASE
GUAM

FY24 AJJY183012 (P-012),
PDI: NORTH AIRCRAFT PARKING RAMP

ELECTRICAL SITE DETAILS

SCALE: AS SHOWN
EPROJECTS NO.: 1665555
CONSTR CONTROL NO.
NAVFAC DRAWING NO. 17361898
SHEET 275 OF 377

ES503

REDESIGN FINAL SUBMITTAL

IF SHEET IS LESS THAN 22" X 34"
REDUCED PRINT. USE GRAPHIC SCALES

FILE NAME: Z:\Clients\ANF\USNavy\Poc\133097_GuamP012NAR\Design\Elec\Sheets\P012_1665555_ES505.dwg
LAYOUT NAME: ES503
PLOTTED: 01/14/2026 9:23am
USER: bdprinkley

GENERAL NOTES:

A.	PROVIDE #3 REBAR CAGE IN DUCTBANK WHERE THE DUCTBANK IS INSTATED UNDER ROADWAYS.

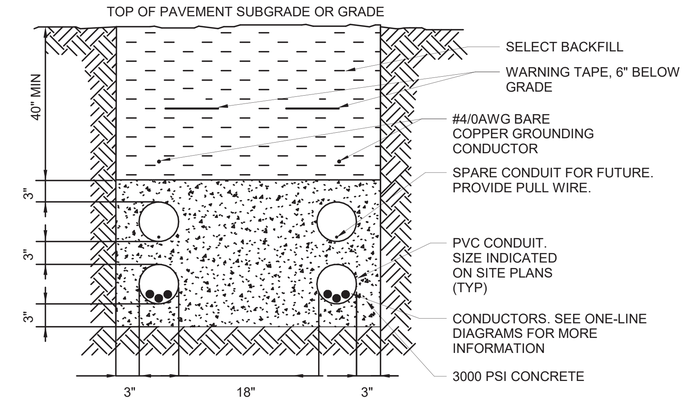

NOTES:

1. USE PLASTIC CONDUIT SPACERS AT 5'-0" OC.

C4 2-WAY CONCRETE ENCASED DUCTBANK

SCALE:NTS

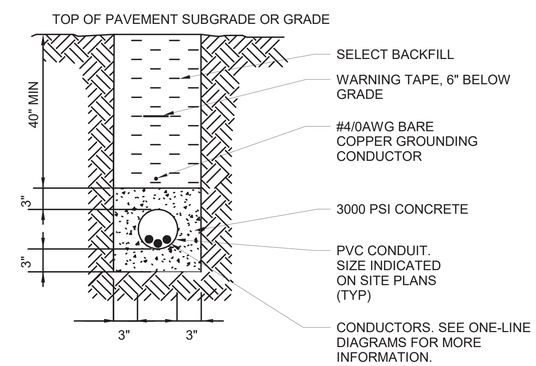

NOTES:

1. USE PLASTIC CONDUIT SPACERS AT 5'-0" OC.

A4 1-WAY CONCRETE ENCASED DUCTBANK

SCALE:NTS

SYM	DESCRIPTION	DATE

NAVFAC

STATE OF MISSOURI — STEVEN D. STRATTON — NUMBER PE-2006024920 — PROFESSIONAL ENGINEER

01/20/2026

SEAL

Jacobs / BURNS McDONNELL

JACOBS/B&M, A JOINT VENTURE
1100 NORTH GLEBE ROAD
SUITE 500
ARLINGTON, VA 22201

A/E Contract No. N62470-20-D-0002
A/E Task Order No. N62470-FE-015
JCG NO. 224/0063

A/E INFO

APPROVED

FOR COMMANDER NAVFAC DATE 02/02/2026

ACTIVITY
AFIMSC APPROVAL PER NAVFAC SAT-TO CHECKLIST

SATISFACTORY TO DATE 31 DEC 2025

DES:	DSB	DRW:	BDP	REV:	SDS
PM/DM	KKK				
BRANCH MANAGER	SMK				
CHIEF ENG/ARCH	SMK				
FIRE PROTECTION	RD				

DEPARTMENT OF THE NAVY
NAVAL FACILITIES ENGINEERING SYSTEMS COMMAND
NAVFAC PACIFIC
NAVAL FACILITIES ENGINEERING SYSTEMS COMMAND – PACIFIC
JOINT REGION MARIANAS (JRM)
ANDERSEN AIR FORCE BASE
GUAM

FY24 AUY183012 (P-012),
PDI: NORTH AIRCRAFT PARKING RAMP

ELECTRICAL SITE DETAILS

SCALE: AS SHOWN
EPROJECTS NO.: 1665555
CONSTR CONTROL NO.
NAVFAC DRAWING NO. 17361899
SHEET 276 OF 377

ES504

REDESIGN FINAL SUBMITTAL

IF SHEET IS LESS THAN 22" X 34"
REDUCED PRINT. USE GRAPHIC SCALES

FILE NAME: C:\Revit_Projects\133097_E_Central_bdpinkley@burnsmcd.com.rvt
LAYOUT NAME: ELECTRICAL SITE DETAILS
PLOTTED: 1/14/2026 9:25:00 AM
USER: BDP

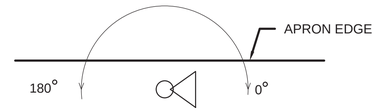

PLAN VIEW WITH FIXTURE REFERENCE POINTING PLAN EAST

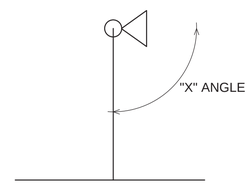

SECTION "A"

AIMING NOTES:

1. MAST POLES ARE NUMBERED BASED ON SHEETS ES103 AND ES104.

HIGH MAST LIGHT SEQUENCE OF OPERATIONS

1. HIGH MAST LIGHTS WILL COME ON AT DUSK AND SHUT OFF AT DAWN WITH PHOTOCELL CONTROL.
2. AIR TRAFFIC CONTROL TOWER WILL HAVE WIRELESS CONTROL TO TURN APRON LIGHTS ON AND OFF FOR BASE OPERATION. WIRELESS CONTROL NEEDS MUST BE COMPATIBLE WITH EXISTING BASE WIDE SYSTEM.

GENERAL NOTES

A.	PROVIDE HIGH MAST POLE FOUNDATION DESIGN BASED ON POLE PROVIDED AND MANUFACTURER RECOMMENDATIONS.
B.	PROVIDE IN-HOUSE PHOTOMETRIC CALCULATIONS IN ACCORDANCE WITH IES AND UFC STANDARDS WHICH SHOW LIGHT FIXTURE HEIGHTS AND ANGLES.

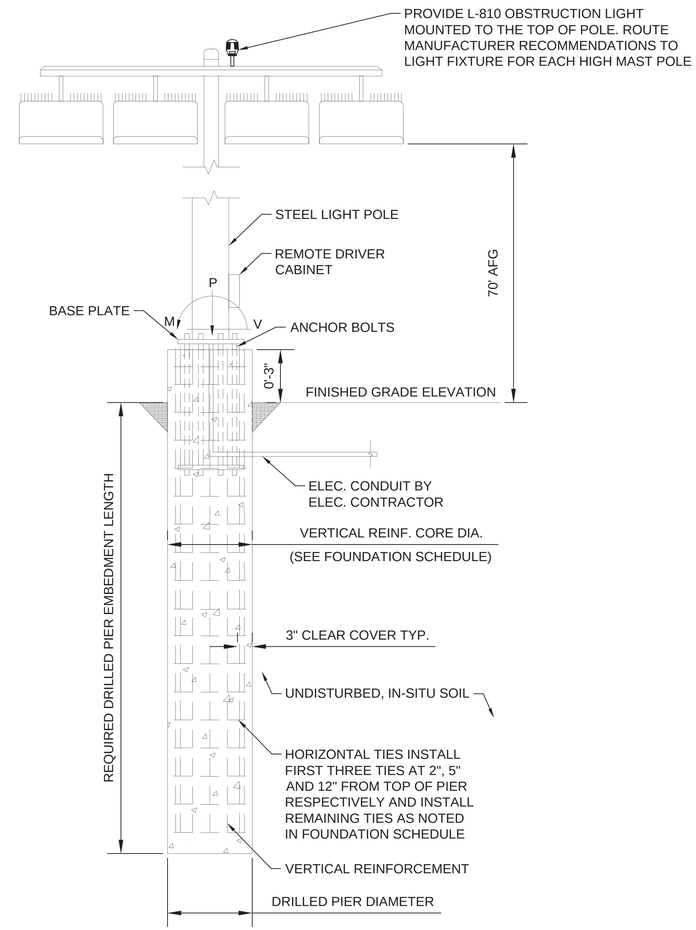

NOTES:

1. THIS DETAIL IS FOR REFERENCE ONLY AND IS NOT INTENDED FOR USE AS AN ASSEMBLY INSTRUCTION. SEE MANUFACTURER INSTALLATION INSTRUCTIONS. COMPLY WITH MANUFACTURER RECOMMENDATION FOR POLE ASSEMBLY.
2. DELEGATED LIGHT POLE FOUNDATION DESIGN: FOUNDATION DESIGN REQUIREMENTS MUST BE PROVIDED BY CONTRACTOR. HIRE A LICENSED STRUCTURAL ENGINEER FOR THE DESIGN OF THE POLE FOUNDATION FOR THE LIGHT POLES IN ACCORDANCE WITH LOCAL CODES AND REGULATIONS. DURING BIDDING, COORDINATE WITH THE LIGHT-POLE MANUFACTURER AND THE ENGINEER OF RECORD TO VERIFY THAT ALL LOADS AND FOUNDATION DESIGN SCOPE ARE ADDRESSED IN THE BID. SUBMIT FOUNDATION DESIGN CALCULATIONS, SEALED DRAWINGS, AND ASSOCIATED DOCUMENTATION FOR REVIEW AND ACCEPTANCE AS PART OF THE CONTRACTOR'S SUBMITTAL PACKAGE.
3. PROVIDE LIGHTNING PROTECTION AIR TERMINAL ATOP OF HIGH MAST POLE. ROUTE DOWN CONDUCTOR TO 10' X 3/4" GROUND ROD AT BASE OF FOUNDATION.

C3 POLE ELEVATION LOOKING PLAN-EAST
SCALE: NTS

A4 APRON FIXTURE MOUNTING AND AIMING DETAILS
SCALE: NTS

HIGHMAST FIXTURE AIMING TABLES

MAST POLE - HML1

FIXTURE #	FIXTURE TYPE	X ANGLE	Z ANGLE
1	A1	70°	29°
2	A1	70°	44°
3	A1	70°	60°
4	A1	70°	75°
5	A1	70°	86°

MAST POLE - HML2

FIXTURE #	FIXTURE TYPE	X ANGLE	Z ANGLE
1	A1	70°	39°
2	A1	70°	61°
3	A1	70°	75°
4	A1	70°	90°
5	A1	70°	104°
6	A1	70°	118°
7	A1	70°	141°

MAST POLE - HML3

FIXTURE #	FIXTURE TYPE	X ANGLE	Z ANGLE
1	A1	70°	94°
2	A1	70°	104°
3	A1	70°	120°
4	A1	70°	135°
5	A1	70°	150°

MAST POLE - HML4

FIXTURE #	FIXTURE TYPE	X ANGLE	Z ANGLE
1	A1A	70°	29°
2	A1B	70°	45°
3	A1B	70°	60°
4	A1B	70°	75°
5	A1B	70°	86°

MAST POLE - HML5

FIXTURE #	FIXTURE TYPE	X ANGLE	Z ANGLE
1	A1	70°	39°
2	A1	70°	62°
3	A1	70°	76°
4	A1	70°	90°
5	A1	70°	104°
6	A1	70°	118°
7	A1	70°	141°

MAST POLE - HML6

FIXTURE #	FIXTURE TYPE	X ANGLE	Z ANGLE
1	A1A	70°	94°
2	A1B	70°	105°
3	A1B	70°	120°
4	A1B	70°	136°
5	A1B	70°	151°

LIGHT FIXTURE SCHEDULE

FIXTURE	FIXTURE INFORMATION							
TYPE	TYPE	COLOR TEMP	FIXTURE LUMENS	VOLTAGE	WATTAGE	LOAD	DESCRIPTION	MOUNTING
A1	LED	4000 K	153000 lm	480 V	1410 W	1410 VA	POLE MOUNTED APRON LIGHT WITH WIDE DISTRIBUTION. REFER TO DETAIL A4, THIS SHEET, FOR MOUNTING HEIGHT	POLE MOUNTED
SL1	LED	4000 K	15500 lm	120 V	129 W	129 VA	POLE MOUNTED STREET LIGHT, TYPE 2 WITH SPILL CONTROL, WET LOCATION LISTED, UPPER VISOR AND BUTTON STYLE, INTEGRAL PHOTOSENSOR, BRONZE FINISH	POLE MOUNTED

NAVFAC

STATE OF MISSOURI — STEVEN D. STRATTON — NUMBER PE-2006024920 — PROFESSIONAL ENGINEER
01/20/2026
SEAL

Jacobs / BURNS McDONNELL
JACOBS/B&M, A JOINT VENTURE
1100 NORTH GLEBE ROAD
SUITE 500
ARLINGTON, VA 22201

A/E Contract No. N62742-20-D-0002
A/E Task Order No. N6274221F0315
JCG NO. D343003
A/E INFO

APPROVED
FOR COMMANDER NAVFAC DATE 02/02/2026

ACTIVITY
AFIMSC APPROVAL PER NAVFAC SAT-TO CHECKLIST

SATISFACTORY TO DATE 31 DEC 2025

DES: DSB DRW: DSB REV: SDS
PM/DM KKK
BRANCH MANAGER SMK
CHIEF ENG/ARCH SMK
FIRE PROTECTION RO

DEPARTMENT OF THE NAVY
NAVAL FACILITIES ENGINEERING SYSTEMS COMMAND
NAVFAC PACIFIC
NAVAL FACILITIES ENGINEERING SYSTEMS COMMAND – PACIFIC
JOINT REGION MARIANAS (JRM)
ANDERSEN AIR FORCE BASE
GUAM

FY24 AJJY183012 (P-012),
PDI: NORTH AIRCRAFT PARKING RAMP

ELECTRICAL SITE DETAILS

SCALE: AS SHOWN
EPROJECTS NO.: 1665555
CONSTR CONTROL NO.
NAVFAC DRAWING NO. 17361900
SHEET 277 OF 377

ES505

REDESIGN FINAL SUBMITTAL

IF SHEET IS LESS THAN 22" X 34" REDUCED PRINT. USE GRAPHIC SCALES

FILE NAME: Z:\Clients\ANF\USNavy\Poc\133097_GuamP012NAR\Design\Elec\Sheets\P012_1665555_ES505.dwg
LAYOUT NAME: ES505
PLOTTED: 01/14/2026 9:23am
USER: bdpinkley

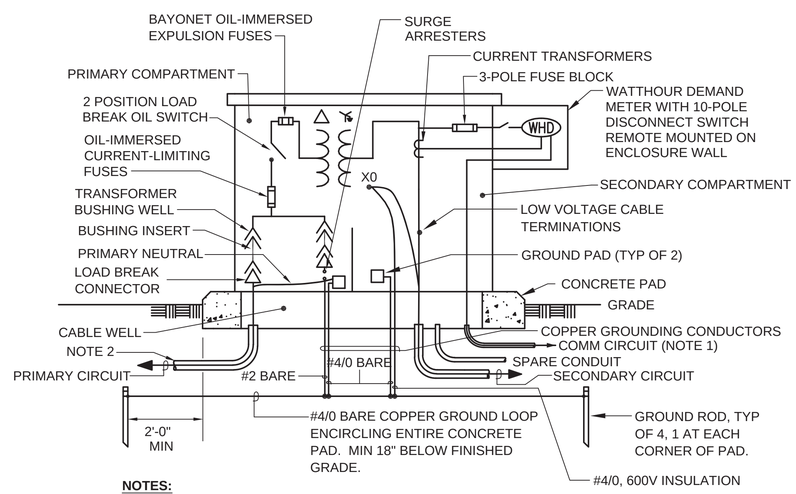

NOTES:

1. PROVIDE ONE 1-INCH SPARE CONDUIT STUBBED-OUT FIVE FEET FROM PAD. COORDINATE WITH ACTIVITY FOR ADDITIONAL METERING INPUT.

2. 2-5" CONDUITS. (1) SPARE CONDUIT. REFER TO DETAILS ON SHEET ES501.

MULTI-GROUNDED PRIMARY SYSTEM (DELTA-WYE) - WITH SURGE ARRESTERS

A3 PAD-MOUNTED TRANSFORMER DETAIL

SCALE: NTS

STATE OF MISSOURI
STEVEN D. STRATTON
NUMBER
PE-2006024920
PROFESSIONAL ENGINEER
01/20/2026
SEAL

Jacobs / BURNS McDONNELL
JACOBS/B&M, A JOINT VENTURE
1100 NORTH GLEBE ROAD
SUITE 500
ARLINGTON, VA 22201

A/E Contract No. N62742-20-D-0002
A/E Task Order No. N6274221F0315
JCG NO. 234326003

A/E INFO

APPROVED
Eva Mizpe
FOR COMMANDER NAVFAC DATE 02/02/2026

ACTIVITY
AFIMSC APPROVAL PER NAVFAC SAT-TO CHECKLIST

SATISFACTORY TO DATE 31 DEC 2025

DES: DSB	DRW: DSB REV: SDS
PM/OM	KKK
BRANCH MANAGER	SMK
CHIEF ENG/ARCH	SMK
FIRE PROTECTION	RO

DEPARTMENT OF THE NAVY
NAVFAC PACIFIC
ANDERSEN AIR FORCE BASE

NAVAL FACILITIES ENGINEERING SYSTEMS COMMAND
NAVAL FACILITIES ENGINEERING SYSTEMS COMMAND – PACIFIC
JOINT REGION MARIANAS (JRM)
GUAM

FY24 AJJY183012 (P-012),
PDI: NORTH AIRCRAFT PARKING RAMP

ELECTRICAL SITE DETAILS

SCALE: AS SHOWN
EPROJECTS NO.: 1665555
CONSTR CONTROL NO.

NAVFAC DRAWING NO.
17361901

SHEET 278 OF 377

ES506

REDESIGN FINAL SUBMITTAL

IF SHEET IS LESS THAN 22" X 34" REDUCED PRINT. USE GRAPHIC SCALES

FILE NAME: Z:\Clients\ANF\USNavy\Pac\133097_GuamP012NAR\Design\Elec\Sheets\P012_1665555_ES505.dwg
LAYOUT NAME: ES506
PLOTTED: 01/14/2026 9:23am
USER: bdprinkley

GENERAL NOTES - SITE PLANS

A.	SEE SHEETS E-001 & E-002 FOR ABBREVIATIONS, LEGENDS AND GENERAL NOTES.
B.	NOT ALL UTILITIES ARE SHOWN. LOCATE UTILITIES PRIOR TO START OF WORK.

HIGH MAST POLE LOCATIONS		
LIGHT FIXTURE	NORTHING	EASTING
HML1	687779.54	384996.00
HML2	687453.46	385142.24
HML3	687157.83	385275.00
HML4	688404.43	386396.12
HML5	688079.55	386541.41
HML6	687815.01	386660.04

A4 HIGH MAST LIGHT POLE LOCATIONS

SCALE: NTS

STATE OF MISSOURI
STEVEN D. STRATTON
NUMBER
PE-2006024920
PROFESSIONAL ENGINEER

01/20/2026

SEAL

Jacobs / BURNS McDONNELL

JACOBS/B&M, A JOINT VENTURE
1100 NORTH GLEBE ROAD
SUITE 500
ARLINGTON, VA 22201

A/E Contract No. N62742-20-D-0002
A/E Task Order No. N6274221F0315
JCG NO. 234380603

A/E INFO

APPROVED

FOR COMMANDER NAVFAC DATE 02/02/2026

ACTIVITY
AFIMSC APPROVAL PER NAVFAC SAT-TO CHECKLIST

SATISFACTORY TO DATE 31 DEC 2025

DES:	DSB	DRW: BDP	REV: SDS
PM/OM			KKK
BRANCH MANAGER			SMK
CHIEF ENG/ARCH			SMK
FIRE PROTECTION			RO

DEPARTMENT OF THE NAVY
NAVAL FACILITIES ENGINEERING SYSTEMS COMMAND
NAVFAC PACIFIC
NAVAL FACILITIES ENGINEERING SYSTEMS COMMAND – PACIFIC
JOINT REGION MARIANAS (JRM)
ANDERSEN AIR FORCE BASE
GUAM

FY24 AUJY183012 (P-012),
PDI: NORTH AIRCRAFT PARKING RAMP

HIGH MAST LIGHT POLE LOCATIONS

SCALE: AS SHOWN
EPROJECTS NO.: 1665555
CONSTR CONTROL NO.

NAVFAC DRAWING NO.
17361902

SHEET 279 OF 377

ES701

REDESIGN FINAL SUBMITTAL

IF SHEET IS LESS THAN 22" X 34"
REDUCED PRINT. USE GRAPHIC SCALES

FILE NAME: Z:\Clients\ANF\USNavy\Pac\133097_GuamP012NAR\Design\Elec\Sheets\P012_1665555_ES101-ES104.dwg
LAYOUT NAME: ES701
PLOTTED: 01/14/2026 9:24am
USER: bdprinkley

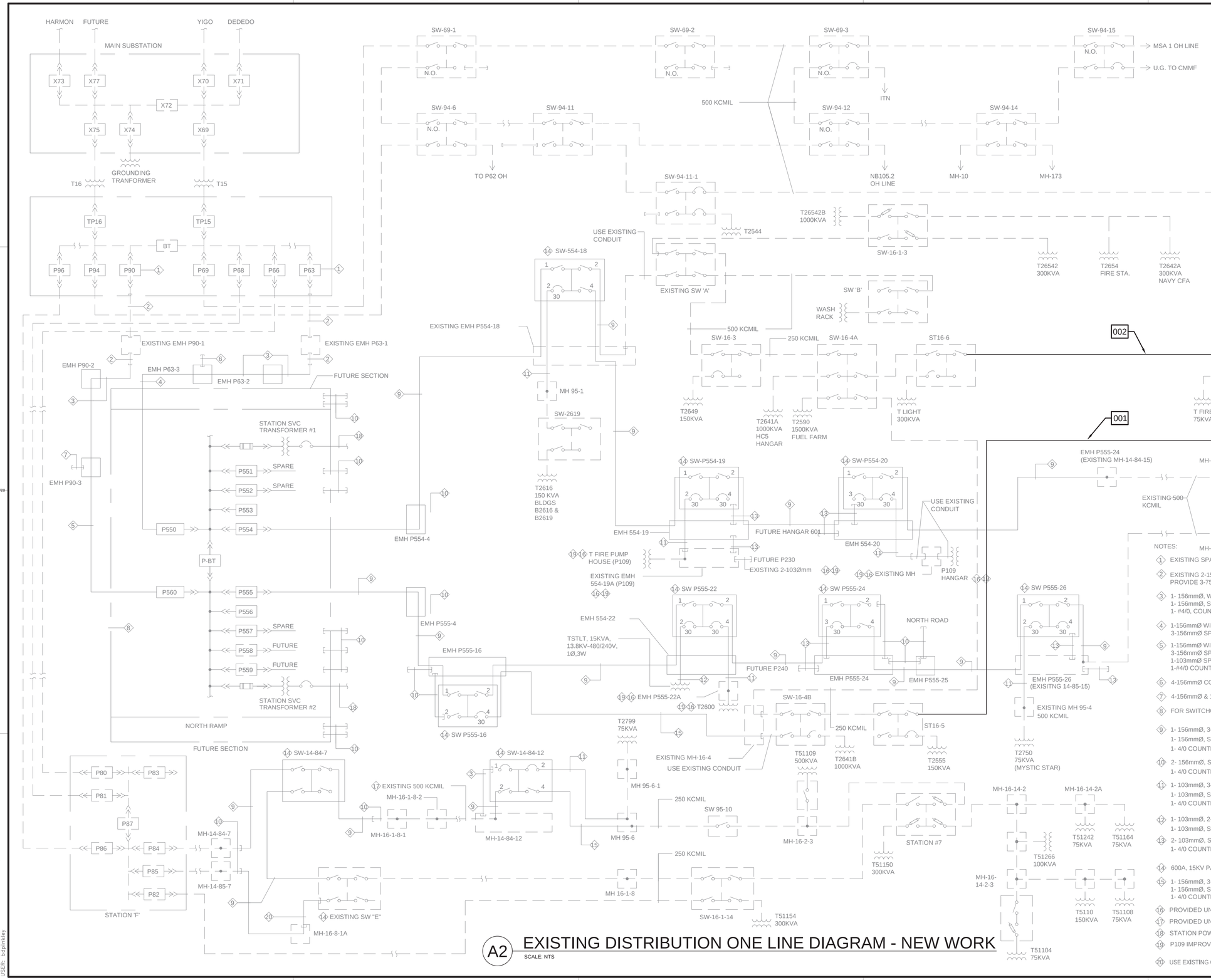

A2 EXISTING DISTRIBUTION ONE LINE DIAGRAM - NEW WORK

SCALE: NTS

GENERAL NOTES

A. ITEMS SHOWN UNDER THE BOLD HATCH ON THIS SHEET INDICATE DEMOLITION SCOPE. OTHER ITEMS REPRESENT EXISTING CONDITIONS.

KEYED NOTES

001. PROVIDE 1- 6" CONDUIT WITH 3-500 KCMIL, CU, 15KV CABLE FROM EXISTING SWITCH ST16-5 TO EXISTING SWITCH SW-16-11; 1 -6" SPARE CONDUIT; 1- #4/0 GROUND.

002. PROVIDE 1- 6" CONDUIT WITH 3-500 KCMIL, CU, 15KV CABLE FROM EXISTING SWITCH ST16-6 TO EXISTING SWITCH SW-16-11; 1 -6" SPARE CONDUIT; 1- #4/0 GROUND.

003. PROVIDE 75KVA 13.8KV-480/277V PADMOUNT TRANSFORMER. REFER TO SHEET ES103 FOR MORE INFORMATION.

004. PROVIDE 1-5" CONDUIT WITH 3- #4/0 AWG CU, 15KV CABLE FROM EXISTING SWITCH TO 75KV TRANSFORMER. 1-5" SPARE CONDUIT.

NOTES:

1. EXISTING SPARE CIRCUIT BREAKER.
2. EXISTING 2-156mmØ CONDUIT & 1#4/0 COUNTERPOISE GROUND. PROVIDE 3-750KCMIL, CU, 15KV CABLES IN ONE OF THE CONDUIT
3. 1- 156mmØ, WITH 3-750 KCMIL, CU, 15KV
   1- 156mmØ, SPARE
   1- #4/0, COUNTERPOISE GROUND
4. 1-156mmØ WITH 3-750 KCMIL, CU, 15KV EACH CONDUIT
   3-156mmØ SPARE
5. 1-156mmØ WITH 3-750KCMIL, CU, 15KV EACH CONDUIT
   3-156mmØ SPARE
   1-103mmØ SPARE FOR FUTURE FIBER OPTIC CABLE
   1-#4/0 COUNTERPOISE GROUND
6. 4-156mmØ CONDUIT STUB-OUT
7. 4-156mmØ & 1-103mmØ CONDUIT STUB-OUT
8. FOR SWITCHGEAR DETAILED ONE LINE DIAGRAM, SEE SHEET E-603-A
9. 1- 156mmØ, 3-500 KCMIL, CU, 15KV
   1- 156mmØ, SPARE
   1- 4/0 COUNTERPOISE GROUND.
10. 2- 156mmØ, STUBOUT
    1- 4/0 COUNTERPOISE GROUND.
11. 1- 103mmØ, 3- #1 AWG, CU, 15KV
    1- 103mmØ, SPARE
    1- 4/0 COUNTERPOISE GROUND.
12. 1- 103mmØ, 2- #1 AWG, CU, 15KV
    1- 103mmØ, SPARE
13. 2- 103mmØ, STUBOUT.
    1- 4/0 COUNTERPOISE GROUND.
14. 600A, 15KV PAD MOUNTED SW.
15. 1- 156mmØ, 3-250 KCMIL, CU, 15KV
    1- 156mmØ, SPARE
    1- 4/0 COUNTERPOISE GROUND
16. PROVIDED UNDER P109 PROJECT.
17. PROVIDED UNDER NR PARKING PHASE II PROJECT.
18. STATION POWER, SEE SHT E-601-A.
19. P109 IMPROVEMENTS AS SHOWN ARE NOTIONAL AND SUBJECT TO CHANGE.
20. USE EXISTING CONDUIT.

STATE OF MISSOURI
STEVEN D. STRATTON
NUMBER PE-2006024920
PROFESSIONAL ENGINEER
01/20/2026
SEAL

Jacobs / BURNS McDONNELL
JACOBS/B&M, A JOINT VENTURE
1100 NORTH GLEBE ROAD
SUITE 500
ARLINGTON, VA 22201

A/E Contract No. N62742-20-D-0002
A/E Task Order No. N6274221F0315
JED NO. 0343903
A/E INFO

APPROVED
FOR COMMANDER NAVFAC DATE 02/02/2026

ACTIVITY
AFIMSC APPROVAL PER NAVFAC SAT-TO CHECKLIST

SATISFACTORY TO DATE 31 DEC 2025

DES: DSB	DRW: DSB	REV: SDS
PM/DM		KKK
BRANCH MANAGER		SMK
CHIEF ENG/ARCH		SMK
FIRE PROTECTION		RO

DEPARTMENT OF THE NAVY
NAVAL FACILITIES ENGINEERING SYSTEMS COMMAND
NAVFAC PACIFIC
ANDERSEN AIR FORCE BASE
NAVAL FACILITIES ENGINEERING SYSTEMS COMMAND – PACIFIC
JOINT REGION MARIANAS (JRM)
GUAM

FY24 AJJY183012 (P-012),
PDI: NORTH AIRCRAFT PARKING RAMP
EXISTING DISTRIBUTION ONE LINE DIAGRAM - NEW WORK

SCALE: AS SHOWN
EPROJECTS NO.: 1665555
CONSTR CONTROL NO.
NAVFAC DRAWING NO. 17361903
SHEET 280 OF 377

EP601

REDESIGN FINAL SUBMITTAL

IF SHEET IS LESS THAN 22" X 34" REDUCED PRINT, USE GRAPHIC SCALES

FILE NAME: Z:\Clients\ANF\USNavy\Pac\133097_GuamP012NAR\Design\Elec\Sheets\P012_1665555_EP601.dwg
LAYOUT NAME: Layout1
PLOTTED: 01/14/2026 9:25am
USER: bdpinkley

KEYED NOTES:

001.	EXTEND CONDUIT 5-FEET PAST ENCLOSURE FOR FUTURE CONNECTION.

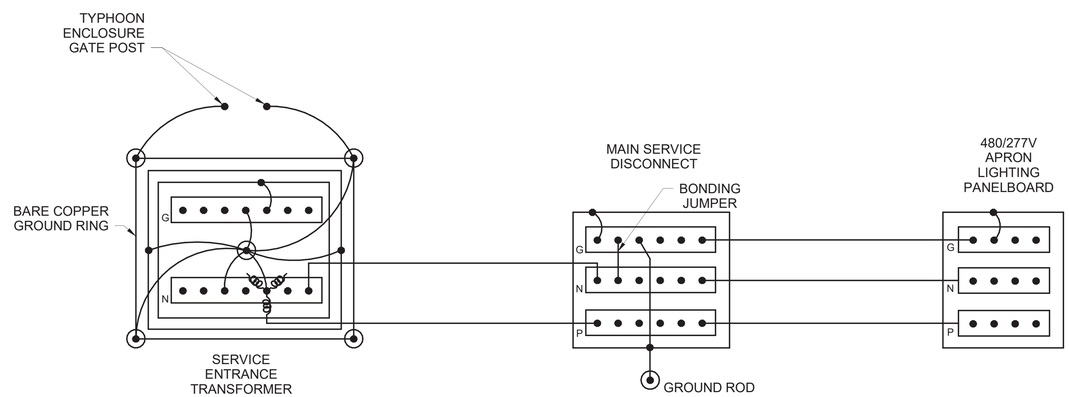

A2 GROUNDING RISER DIAGRAM

SCALE:NTS

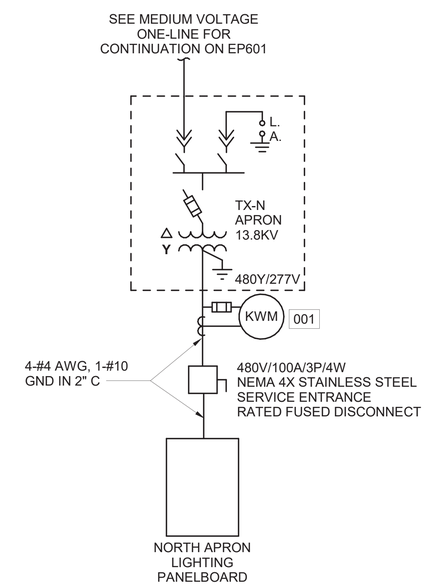

A4 STREET LIGHTING ONE-LINE DIAGRAM

SCALE:NTS

SYM	DESCRIPTION	DATE

NAVFAC

STATE OF MISSOURI
STEVEN D. STRATTON
NUMBER
PE-2006024920
PROFESSIONAL ENGINEER
01/20/2026
SEAL

Jacobs / BURNS McDONNELL

JACOBS/B&M, A JOINT VENTURE
1100 NORTH GLEBE ROAD
SUITE 500
ARLINGTON, VA 22201

A/E Contract No. N62470-20-D-0002
A/E Task Order No. N62472-FE015
JCG NO. 224/3003

A/E INFO

APPROVED
Evan Moyer
FOR COMMANDER NAVFAC DATE 02/02/2026

ACTIVITY
AFIMSC APPROVAL PER NAVFAC SAT-TO CHECKLIST

SATISFACTORY TO DATE 31 DEC 2025

DES:	DSB	DRW:	BDP	REV:	SDS
PM/DM					KKK
BRANCH MANAGER					SMK
CHIEF ENG/ARCH					SMK
FIRE PROTECTION					RD

DEPARTMENT OF THE NAVY
NAVAL FACILITIES ENGINEERING SYSTEMS COMMAND
NAVFAC PACIFIC
NAVAL FACILITIES ENGINEERING SYSTEMS COMMAND – PACIFIC
JOINT REGION MARIANAS (JRM)
ANDERSEN AIR FORCE BASE
GUAM

FY24 AUY183012 (P-012),
PDI: NORTH AIRCRAFT PARKING RAMP

ONE-LINE DIAGRAMS

SCALE: AS SHOWN
EPROJECTS NO.: 1665555
CONSTR CONTROL NO.

NAVFAC DRAWING NO.
17361904

SHEET 281 OF 377

EP602

REDESIGN FINAL SUBMITTAL

FILE NAME: C:\Revit_Projects\133097_E_Central_bdpinkley@burnsmcd.com.rvt
LAYOUT NAME: ONE-LINE DIAGRAMS
PLOTTED: 1/14/2026 9:24:59 AM
USER: BDP

IF SHEET IS LESS THAN 22" X 34"
REDUCED PRINT. USE GRAPHIC SCALES

KEYED NOTES:

001.	PANELBOARD IS EXISTING. LOADS SHOWN IN THE SCHEDULE MAY BE OUTDATED AND SHOULD BE VERIFIED BY THE CONTRACTOR AND COORDINATED WITH BASE OPS. ALL LOADS AND DEMANDS ARE ADDITIONS TO THE EXISTING PANELBOARD AND ARE NOT CURRENT, ACCORDING TO WHAT IS ALREADY CONNECTED TO THE PANEL. METER THE PANELBOARD AND ENSURE THE MAIN CIRCUIT BREAKER IS SUFFICIENTLY SIZED.

PANELBOARD: RL1

LOCATION:
SUPPLY FROM: MDP
MOUNTING: SURFACE
ENCLOSURE: NEMA 4X

VOLTAGE: 480Y/277V
PHASE: 3
WIRES: 4

A.I.C. RATING: 18000
MAINS TYPE: MCB
MAINS RATING: 225 A
MCB RATING: 225 A

NOTES:

#	BKR	P	LOAD SERVED	WIRE / GROUND / CONDUIT	A		B		C		WIRE / GROUND / CONDUIT	LOAD SERVED	P	BKR	#
1	30	2	HIGH MAST LIGHT POLE 1,2	2#8AWG, #10GND, 2"C	4210	--						SPACE	1	--	2
3	--	--	--	--			4210	--				SPACE	1	--	4
5	30	2	HIGH MAST LIGHT POLE 3,4	2#8AWG, #10GND, 2"C					4210	--		SPACE	1	--	6
7	--	--	--	--	4210	--						SPACE	1	--	8
9	30	2	HIGH MAST LIGHT POLE 5,6	2#8AWG, #10GND, 3/4"C			4210	--				SPACE	1	--	10
11	--	--	--	--					4210	--		SPACE	1	--	12
13	--	1	SPACE		--	--						SPACE	1	--	14
15	--	1	SPACE				--	--				SPACE	1	--	16
17	--	1	SPACE						--	--		SPACE	1	--	18
19	--	1	SPACE		--	0					PER MFR RECOMMENDATIONS	SPD	3	30	20
21	--	1	SPACE				--	0			--	--	--	--	22
23	--	1	SPACE						--	0	--	--	--	--	24
				TOTAL LOAD:	8420 VA		8420 VA		8420 VA						

PANEL TOTALS	
TOTAL CONNECTED LOAD:	25260 VA
TOTAL ESTIMATED DEMAND LOAD:	25260 VA
TOTAL CONNECTED CURRENT:	30 A
TOTAL ESTIMATED DEMAND...	30 A
DEMAND WITH EXPANSION:	36 A

PANELBOARD: ST 001

LOCATION:
SUPPLY FROM:
MOUNTING: SURFACE
ENCLOSURE: NEMA 4R

VOLTAGE: 480Y/277V
PHASE: 3
WIRES: 4

A.I.C. RATING: ###
MAINS TYPE: MAINS ONLY
MAINS RATING: 100 A
MCB RATING: 40 A

NOTES:

#	BKR	P	LOAD SERVED	WIRE / GROUND / CONDUIT	A		B		C		WIRE / GROUND / CONDUIT	LOAD SERVED	P	BKR	#
1	20	2	SPARE		0	0						SPARE	2	20	2
3	--	--	--	--			0	0			--	--	--	--	4
5	20	2	SPARE						0	0		SPARE	2	20	6
7	--	--	--	--	0	0					--	--	--	--	8
9	20	2	EXISTING STREET LIGHTS	2-#6AWG, 1-#10GND, IN 1" C			1226	--				SPACE	1	--	10
11	--	--	--	--					1226	--		SPACE	1	--	12
				TOTAL LOAD:	0 VA		1226 VA		1226 VA						

PANEL TOTALS	
TOTAL CONNECTED LOAD:	2451 VA
TOTAL ESTIMATED DEMAND LOAD:	2451 VA
TOTAL CONNECTED CURRENT:	3 A
TOTAL ESTIMATED DEMAND...	3 A
DEMAND WITH EXPANSION:	4 A

SYM	DESCRIPTION	DATE

NAVFAC

STATE OF MISSOURI
STEVEN D. STRATTON
NUMBER
PE-2006024920
PROFESSIONAL ENGINEER
01/20/2026
SEAL

Jacobs / BURNS McDONNELL
JACOBS/B&M, A JOINT VENTURE
1100 NORTH GLEBE ROAD
SUITE 500
ARLINGTON, VA 22201
A/E Contract No. N62470-20-D-0002
A/E Task Order No. N62470FE915
JCG NO. 224X3003
A/E INFO

APPROVED
FOR COMMANDER NAVFAC DATE 02/02/2026

ACTIVITY
AFIMSC APPROVAL PER NAVFAC SAT-TO CHECKLIST

SATISFACTORY TO DATE 31 DEC 2025

DES: DSB DRW: BDP REV: SDS
PM/DM KKK
BRANCH MANAGER SMK
CHIEF ENG/ARCH SMK
FIRE PROTECTION RO

DEPARTMENT OF THE NAVY
NAVAL FACILITIES ENGINEERING SYSTEMS COMMAND
NAVFAC PACIFIC
NAVAL FACILITIES ENGINEERING SYSTEMS COMMAND ~ PACIFIC
JOINT REGION MARIANAS (JRM)
ANDERSEN AIR FORCE BASE
GUAM

FY24 AJJY183012 (P-012),
PDI: NORTH AIRCRAFT PARKING RAMP

PANELBOARD SCHEDULES

SCALE: AS SHOWN
EPROJECTS NO.: 1665555
CONSTR CONTROL NO.
NAVFAC DRAWING NO. 17361905
SHEET 282 OF 377

EP701

REDESIGN FINAL SUBMITTAL

IF SHEET IS LESS THAN 22" X 34"
REDUCED PRINT. USE GRAPHIC SCALES

FILE NAME: C:\Revit_Projects\133097_E_Central_bdpinkley@burnsmcd.com.rvt
LAYOUT NAME: PANELBOARD SCHEDULES
PLOTTED: 1/14/2026 9:24:59 AM
USER: BDP

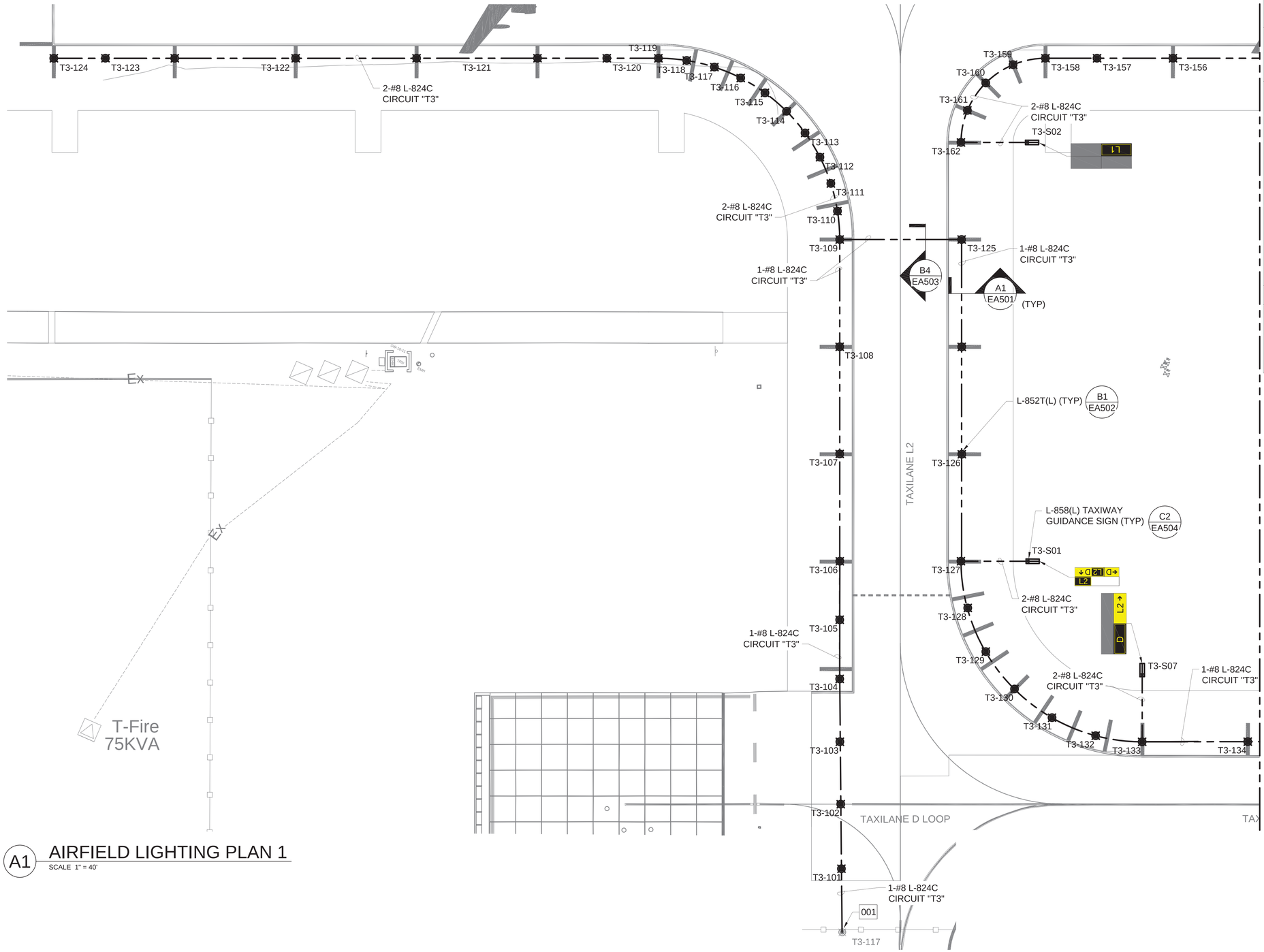

A1 AIRFIELD LIGHTING PLAN 1
SCALE 1" = 40'

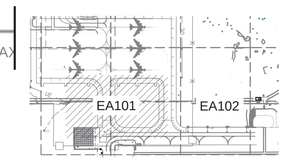

AREA KEY MAP

0 20' 40' 80'
SCALE: 1"=40'

GENERAL NOTES - SITE PLANS

A. SEE SHEETS E-001 & E-002 FOR ABBREVIATIONS, LEGENDS AND GENERAL NOTES.

B. NOT ALL UTILITIES ARE SHOWN. THE CONTRACTOR IS REPONSIBLE FOR LOCATING UTILITIES PRIOR TO START OF WORK.

C. CONTRACTOR TO MODIFY AIRFIELD LIGHTING CONTROL SYSTEM COMPUTER. TO SHOW AIRFIELD MODIFICATIONS. EXISTING SYSTEM IS MANUFACTURED BY CROUSE-HINDS.

D. DISRUPTIONS TO ELECTRICAL CIRCUITS POWERING AIRFIELD SYSTEMS AND LIGHTNING MUST BE COORDINATED AT LEAST 72 HOURS IN ADVANCE WITH AIRFIELD MANAGEMENT. WORK SHOULD BE COMPLETED DURING DAYLIGHT AND WITHIN NORMAL DUTY HOURS, MONDAY-FRIDAY, 0800-1700 AND ONLY OUTSIDE THESE HOURS WHEN AGREED UPON OR DURING EXTENUATING CIRCUMSTANCES.

KEYED NOTES

001. SPLICE INTO EXISTING AIRFIELD LIGHTING TAXIWAY DELTA EDGE CIRCUIT IN EXISTING BASE CAN. SAWCUT EXISTING PAVEMENT AND PATCH.

NAVFAC

STATE OF MISSOURI
STEVEN D. STRATTON
NUMBER PE-2006024920
PROFESSIONAL ENGINEER
01/20/2026
SEAL

Jacobs / BURNS McDONNELL
JACOBS/B&M, A JOINT VENTURE
1100 NORTH GLEBE ROAD
SUITE 500
ARLINGTON, VA 22201

A/E Contract No. N62742-20-D-0002
A/E Task Order No. N62742219f0315
JCG NO. 2343663
A/E INFO

APPROVED
FOR COMMANDER NAVFAC DATE 02/02/2026

ACTIVITY
AFIMSC APPROVAL PER NAVFAC SAT-TO CHECKLIST

SATISFACTORY TO DATE 31 DEC 2025

DES: DSB	DRW: DSB	REV: SDS	
PM/DM			KKK
BRANCH MANAGER			SMK
CHIEF ENG/ARCH			SMK
FIRE PROTECTION			RO

DEPARTMENT OF THE NAVY
NAVFAC PACIFIC
NAVAL FACILITIES ENGINEERING SYSTEMS COMMAND
NAVAL FACILITIES ENGINEERING SYSTEMS COMMAND ~ PACIFIC
JOINT REGION MARIANAS (JRM)
ANDERSEN AIR FORCE BASE
GUAM

FY24 AJJY183012 (P-012)
PDI: NORTH AIRCRAFT PARKING RAMP

AIRFIELD LIGHTING PLAN 1

SCALE: AS SHOWN
EPROJECTS NO.: 1665555
CONSTR CONTROL NO.
NAVFAC DRAWING NO. 17361906
SHEET 283 OF 377

EA101

REDESIGN FINAL SUBMITTAL

IF SHEET IS LESS THAN 22" X 34" REDUCED PRINT. USE GRAPHIC SCALES

FILE NAME: Z:\Clients\ANF\USNavy\Pac\133097_GuamP012N&R\Design\Elec\Sheets\P012_1665555_EA101-EA102.dwg
LAYOUT NAME: EA101
PLOTTED: 01/14/2026 9:30am
USER: bdinkley

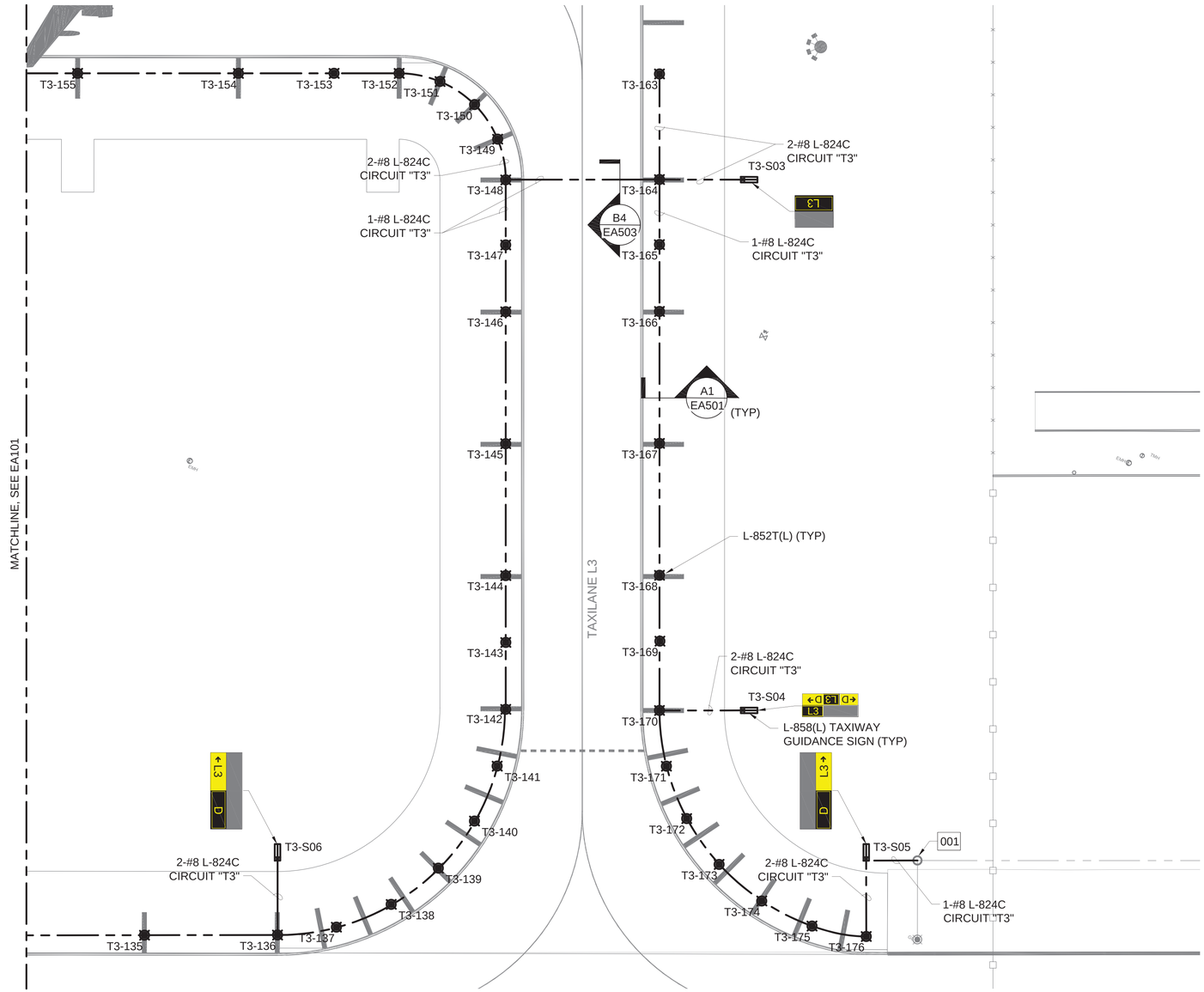

A1 AIRFIELD LIGHTING PLAN 2

SCALE 1" = 40'

GENERAL NOTES - SITE PLANS

A.	SEE SHEETS E-001 & E-002 FOR ABBREVIATIONS, LEGENDS AND GENERAL NOTES.
B.	NOT ALL UTILITIES ARE SHOWN. THE CONTRACTOR IS REPONSIBLE FOR LOCATING UTILITIES PRIOR TO START OF WORK.
C.	CONTRACTOR TO MODIFY AIRFIELD LIGHTING CONTROL SYSTEM COMPUTER. TO SHOW AIRFIELD MODIFICATIONS. EXISTING SYSTEM IS MANUFACTURED BY CROUSE-HINDS.
D.	DISRUPTIONS TO ELECTRICAL CIRCUITS POWERING AIRFIELD SYSTEMS AND LIGHTING MUST BE COORDINATED AT LEAST 72 HOURS IN ADVANCE WITH AIRFIELD MANAGEMENT. WORK SHOULD BE COMPLETED DURING DAYLIGHT AND WITHIN NORMAL DUTY HOURS, MONDAY-FRIDAY, 0800-1700 AND ONLY OUTSIDE THESE HOURS WHEN AGREED UPON OR DURING EXTENUATING CIRCUMSTANCES.

KEYED NOTES

001.	SPLICE INTO EXISTING AIRFIELD LIGHTING TAXIWAY DELTA EDGE CIRCUIT IN EXISTING BASE CAN.

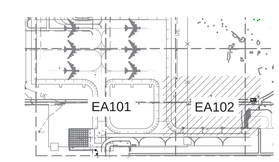

AREA KEY MAP

0 20' 40' 80'

SCALE: 1"=40'

STATE OF MISSOURI
STEVEN D. STRATTON
NUMBER
PE-2006024920
PROFESSIONAL ENGINEER

01/20/2026

SEAL

Jacobs / BURNS McDONNELL

JACOBS/B&M, A JOINT VENTURE
1100 NORTH GLEBE ROAD
SUITE 500
ARLINGTON, VA 22201

A/E Contract No. N62742-20-D-0002
A/E Task Order No. N6274221F0315
JCG NO. 15430603

A/E INFO

APPROVED

FOR COMMANDER NAVFAC DATE 02/02/2026

ACTIVITY
AF/MSC APPROVAL PER NAVFAC SAT-TO CHECKLIST

SATISFACTORY TO DATE 31 DEC 2025

DES: DSB	DRW: DSB	REV: SDS	
PM/DM			KKK
BRANCH MANAGER			SMK
CHIEF ENG/ARCH			SMK
FIRE PROTECTION			RO

DEPARTMENT OF THE NAVY
NAVAL FACILITIES ENGINEERING SYSTEMS COMMAND
NAVFAC PACIFIC
NAVAL FACILITIES ENGINEERING SYSTEMS COMMAND – PACIFIC
JOINT REGION MARIANAS (JRM)
ANDERSEN AIR FORCE BASE
GUAM

FY24 AJJY183012 (P-012),
PDI: NORTH AIRCRAFT PARKING RAMP

AIRFIELD LIGHTING PLAN 2

SCALE: AS SHOWN
EPROJECTS NO.: 1665555
CONSTR CONTROL NO.
NAVFAC DRAWING NO. 17361907
SHEET 284 OF 377

EA102

REDESIGN FINAL SUBMITTAL

IF SHEET IS LESS THAN 22" X 34"
REDUCED PRINT. USE GRAPHIC SCALES

FILE NAME: Z:\Clients\ANF\USNavy\Proj\135097_GuamP012NAR\Design\Elec\Sheets\P012_1665555_EA101-EA102.dwg
LAYOUT NAME: EA102
PLOTTED: 01/14/2026 9:30am
USER: kdpinkley

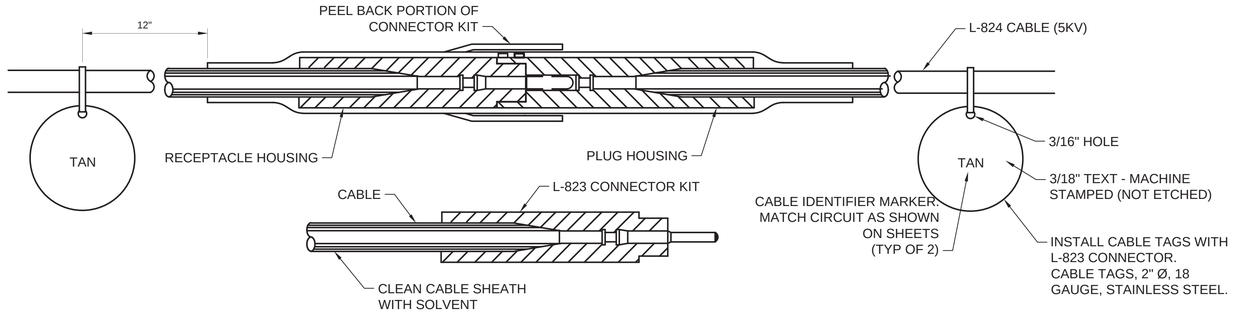

PIN RECEPTACLE

NOTES:

1. PROVIDE CABLE CIRCUIT IDENTIFICATION MARKERS ATTACHED TO BOTH SIDES OF EACH CABLE CONNECTION.
2. ATTACH CABLE IDENTIFICATION MARKERS WITH CORROSION RESISTANT MATERIAL.
3. CLEAN THE CABLE PRIOR TO THE INSTALLATION OF THE L-823 CONNECTOR KIT.
4. COMPLETE INSTALLATION OF THE PIN/RECEPTACLE WITH "CRIMPING" TOOL SUPPLIED OR RECOMMENDED BY THE MANUFACTURER AND DESIGNED FOR THIS SPECIFIC PURPOSE.
5. ATTACH EACH CABLE TIE ENOUGH TO HOLD IN PLACE WITHOUT COMPRESSING HOUSING. TRIM OFF EXCESS CABLE TIE.
6. INSTALLATION OF COMPLETE KIT CONNECTOR MUST BE IN STRICT CONFORMANCE WITH MANUFACTURER'S REQUIREMENTS.
7. CABLE IDENTIFICATION MARKS MUST MEET 36 CES STANDARDS.

E1 L-823 CONNECTOR DETAIL WITHOUT HEATSHRINK

SCALE: NTS

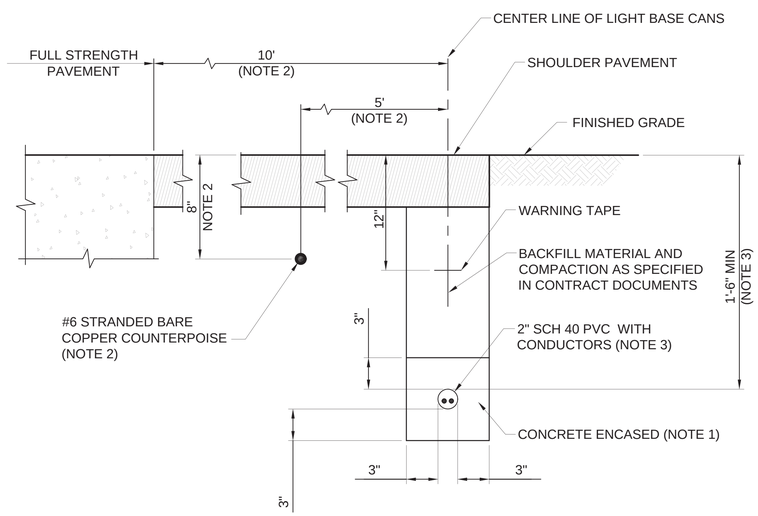

NOTES:

1. CONCRETE ENCASED CONDUIT WITH A MINIMUM OF 3-INCH COVER.
2. LOCATE COUNTERPOISE HALF WAY BETWEEN FULL-STRENGTH RUNWAY OR TAXIWAY PAVEMENT AND CENTER LINE OF LIGHT BASE CANS. INSTALL COUNTERPOISE 8" MINIMUM BELOW FINISHED GRADE. PROVIDE 10' x 3/4" GROUND ROD AT EACH END OF DUCTBANK.
3. PROVIDE MINIMUM CONDUIT SLOPE OF 0.5 PERCENT WHERE POSSIBLE.

A1 CONCRETE ENCASED DUCT/CONDUIT DETAIL

SCALE: NTS

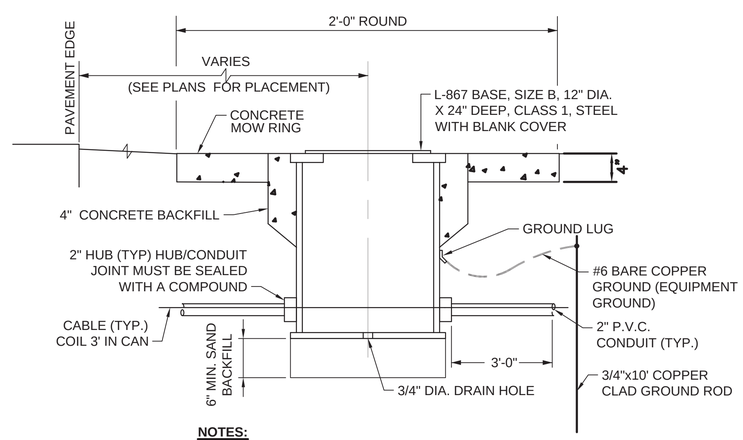

NOTES:

1. DRILLING IS REQUIRED WHERE REFUSAL OCCURS DURING STANDARD HAMMER DRILL INSTALATION IN RDER TO OBTAIN 25 OHMS MAXIMUM.

A3 SPLICE CAN DETAIL

SCALE: NTS

NAVFAC

STATE OF MISSOURI
STEVEN D. STRATTON
NUMBER PE-2006024920
PROFESSIONAL ENGINEER
01/20/2026
SEAL

Jacobs / BURNS & McDONNELL
JACOBS/B&M, A JOINT VENTURE
1100 NORTH GLEBE ROAD
SUITE 500
ARLINGTON, VA 22201

A/E Contract No. N62742-20-D-0002
A/E Contract No. N62742231F0315
JCG NO. D3438603
A/E INFO

APPROVED
Eva Mizer
FOR COMMANDER NAVFAC DATE 02/02/2026

ACTIVITY
AFIMSC APPROVAL PER NAVFAC SAT-TO CHECKLIST

SATISFACTORY TO DATE 31 DEC 2025

DES: DSB	DRW: DSB	REV: SDS	
PM/DM			KKK
BRANCH MANAGER			SMK
CHIEF ENG/ARCH			SMK
FIRE PROTECTION			RO

DEPARTMENT OF THE NAVY
NAVAL FACILITIES ENGINEERING SYSTEMS COMMAND
NAVFAC PACIFIC
NAVAL FACILITIES ENGINEERING SYSTEMS COMMAND – PACIFIC
JOINT REGION MARIANAS (JRM)
ANDERSEN AIR FORCE BASE
GUAM

FY24 AJJY183012 (P-012),
PDI: NORTH AIRCRAFT PARKING RAMP

AIRFIELD LIGHTING DETAILS

SCALE: AS SHOWN
EPROJECTS NO.: 1665555
CONSTR CONTROL NO.
NAVFAC DRAWING NO. 17361908
SHEET 285 OF 377

EA501

REDESIGN FINAL SUBMITTAL

IF SHEET IS LESS THAN 22" X 34" REDUCED PRINT. USE GRAPHIC SCALES

FILE NAME: Z:\Clients\ANF\USNavy\Poc\133097_GuamP012NAR\Design\Elec\Sheets\P012_1665555_EA501.dwg
LAYOUT NAME: EA501
PLOTTED: 01/14/2026 9:31am
USER: bdpinkley

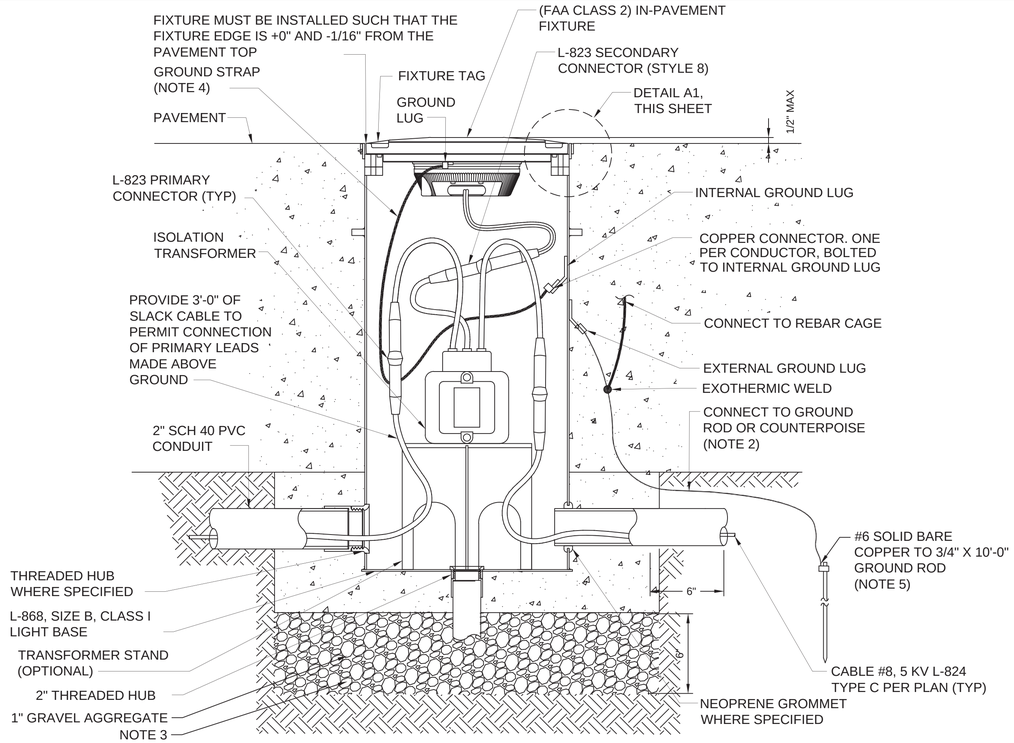

NOTES:

1. REFER TO DETAIL 3, THIS SHEET, FOR BASE INSTALLATION DETAILS AND NOTES.
2. GROUND ROD LOCATION IS OUTSIDE THE BASE CAN ON THE SIDE ADJACENT TO THE COUNTERPOISE AND CONNECTED TO THE EXTERNAL GROUND LUG AND REINFORCEMENT CAGE. PROVIDE 12" SEPARATION FROM COUNTERPOISE. THE SAFETY GROUND MUST BE A AWG #6 SOLID BARE COPPER CONDUCTOR WITH ONE HOLE LUG BOLTED TO THE EXTERIOR GROUND LUG AT THE FIXTURE BASE. THE OTHER END IS CONNECTED TO A 3/4 INCH BY 10 FOOT GROUND ROD INSTALLED BESIDE THE FIXTURE. ENSURE RESISTANCE-TO-GROUND OF THE ROD IS 25 OHMS OR LESS IN ACCORDANCE WITH MANUFACTURER'S REQUIREMENTS.
3. INSTALL GRAVEL SUMP (FRENCH DRAIN) BELOW FIXTURE BASE. GRAVEL SUMP MUST BE 12" DIA MIN. 6" DEEP WITH 1" GRAVEL AGGREGATE.
4. PROVIDE 48" BRAIDED COPPER GROUND STRAP BETWEEN LIGHT BASE CAN AND LIGHT FIXTURE. STRAP MUST BE EQUIVALENT TO NO. 6 CABLE.
5. DRILLING IS REQUIRED WHERE REFUSAL OCCURS DURING STANDARD HAMMER DRILL INSTALLATION IN ORDER TO OBTAIN 10 OHMS MAXIMUM.

B1 IN-PAVEMENT LIGHT FIXTURE INSTALLATION (DEEP BASE)

SCALE: NTS

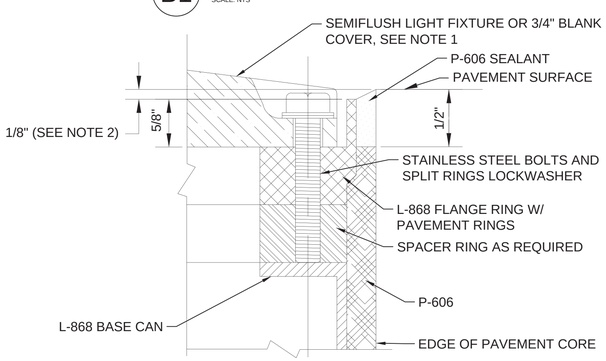

NOTES:

1. TOP OF LIGHT FIXTURE MUST BE INSTALLED PER ADVISORY CIRCULAR.
2. DIMENSIONS ARE TYPICAL. VERIFY DIMENSION BASED ON ACTUAL MATERIAL PROVIDED.
3. THE IN-PAVEMENT LIGHTING INSTALLER IS RESPONSIBLE FOR COORDINATING WITH THE PAVING CONTRACTOR TO ENSURE LIGHTS ARE VISIBLE ONCE COMPLETED.

A1 IN-PAVEMENT FIXTURE INSTALLATION DETAIL

SCALE: NTS

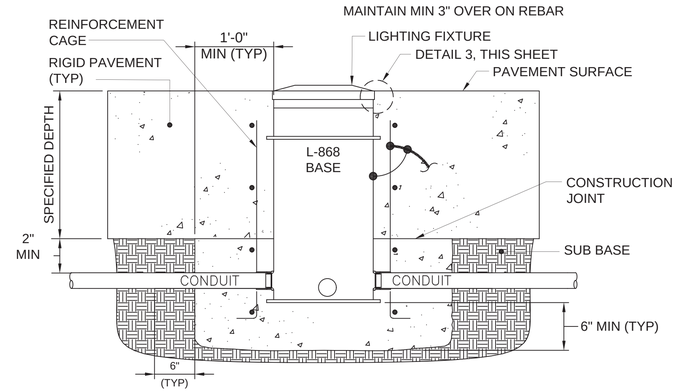

BASE AND ANCHOR - RIGID PAVEMENT

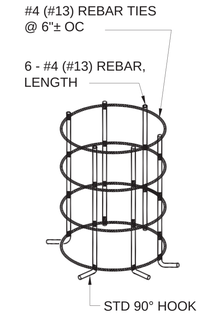

TIE BAR CAGE REINFORCEMENT

NOTES:

1. THE USE OF MUD PLATES, SPACER RINGS, EXTENSIONS, ETC., IS DEPENDENT ON PAVING TECHNIQUES.
2. ORIENTATION TOLERANCE FOR THE BASE IS ±1/2 DEGREE FROM THE CENTERLINE INDICATED ON THE PLANS.
3. THE L-868 BASE MUST BE INSTALLED AT THE APPROPRIATE ELEVATION TO ALLOW FOR THE BAND RING 1/8" TO 3/4" BELOW THE TOP OF PAVEMENT, AS MEASURED FROM THE TOP OF THE BAND RING.
4. USE SPACER RINGS BETWEEN THE L-868 BASE AND FIXTURE TO ADJUST THE TOP OF LIGHT FIXTURE MUST BE EVEN WITH THE TOP OF THE PAVEMENT. MEASURED ON THE LOW SIDE OF PAVEMENT. CONTRACTOR MUST PROVIDE ENOUGH SPACER RINGS WHEN ORDERING LIGHT BASES (AVAILABLE FROM 1/16" TO 1 15/16" IN 1/16" INCREMENTS) TO ADJUST THE LIGHT BASES IN A TIMELY MANNER.
5. NO MORE THAN 3 SPACER RINGS ON ONE LIGHT BASE INSTALLATION.
6. PROVIDE STAINLESS STEEL T304 BOLTS THREADED FULL LENGTH TO FASTEN THE FIXTURES TO THE LIGHT BASES INCLUDING REQUIRED SPACER RINGS WITH BOLT EXTENDING A MINIMUM 1/8" BELOW BOTTOM FLANGE AND NOT TO EXCEED 1" BELOW BOTTOM FLANGE AFTER FINAL TORQUE HAS BEEN APPLIED.
7. SPACER RINGS MUST BE VEGA #5411 SERIES OR EQUIVALENT. PROVIDE A MINIMUM OF TWO $\frac{1}{4}$" SPACER RINGS FOR EACH FIXTURE TO ACHIEVE FINAL ELEVATION. EXCESS SPACER RINGS AT THE END OF THE PROJECT MUST BE DELIVERED TO THE AIRPORT FOR FUTURE USE.
8. PROVIDE ISOLATION TRANSFORMER, TAPE AND HEAT SHRINK L-823 CONNECTIONS AND PROVIDE A TYPE 2 FROST RESISTANT BRICK IN EACH LIGHT FIXTURE BASE CAN.
9. PRE-ASSEMBLE IN-PAVEMENT LIGHT FIXTURE WITH SNOW PLOW RINGS TO ASSURE EACH INDIVIDUAL UNIT ASSEMBLY IS WITHIN TOLERANCE. USE A STRAIGHT EDGE TO VERIFY THE FIXTURE IS LEVEL (TO 1/8"). UNITS NOT WITHIN THIS TOLERANCE WILL BE REJECTED. ASSURE SNOW PLOW RINGS ARE CONFIGURED WITH CORRECT NUMBER AND WIDTH OF OPENINGS.

B3 BASE AND ANCHOR DETAILS

SCALE: NTS

STATE OF MISSOURI
STEVEN D. STRATTON
NUMBER PE-2006024920
PROFESSIONAL ENGINEER
01/20/2026
SEAL

Jacobs / BURNS McDONNELL
JACOBS/B&M, A JOINT VENTURE
1100 NORTH GLEBE ROAD
SUITE 500
ARLINGTON, VA 22201

A/E Contract No. N62742-20-D-0002
A/E Contract No. 2021423/9315
JCG NO. D3438603 — A/E INFO

APPROVED
FOR COMMANDER NAVFAC DATE 02/02/2026

ACTIVITY
AFIMSC APPROVAL PER NAVFAC SAT-TO CHECKLIST

SATISFACTORY TO DATE 31 DEC 2025

DES: DSB	DRW: DSB REV: SDS
PM/DM	KKK
BRANCH MANAGER	SMK
CHIEF ENG/ARCH	SMK
FIRE PROTECTION	RO

DEPARTMENT OF THE NAVY
NAVAL FACILITIES ENGINEERING SYSTEMS COMMAND
NAVFAC PACIFIC
NAVAL FACILITIES ENGINEERING SYSTEMS COMMAND – PACIFIC
JOINT REGION MARIANAS (JRM)
ANDERSEN AIR FORCE BASE
GUAM

FY24 AJJY183012 (P-012),
PDI: NORTH AIRCRAFT PARKING RAMP

AIRFIELD LIGHTING DETAILS

SCALE: AS SHOWN
EPROJECTS NO.: 1665555
CONSTR CONTROL NO.
NAVFAC DRAWING NO. 17361909
SHEET 286 OF 377

EA502

REDESIGN FINAL SUBMITTAL

IF SHEET IS LESS THAN 22" X 34" REDUCED PRINT. USE GRAPHIC SCALES

FILE NAME: Z:\Clients\ANF\USNavy\Pac\133097_GuamP012NAR\Design\Elec\Sheets\P012_1665555_EA502.dwg
LAYOUT NAME: EA502
PLOTTED: 01/14/2026 9:31am
USER: bdprinkley

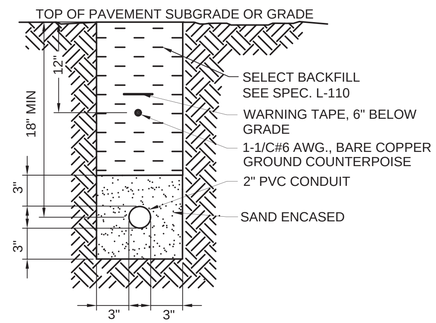

DIRECT-BURIED
B2 ONE-WAY 2" CONDUIT BELOW GRADE

SCALE: NTS

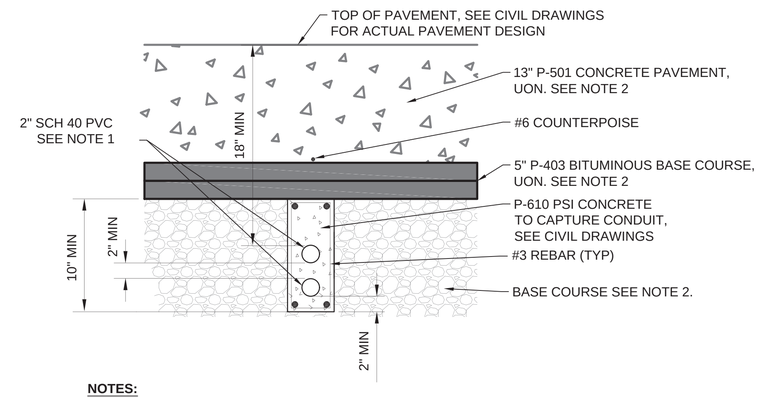

NOTES:

1. PROVIDE CONDUIT CHAIRS TO SUPPORT CONDUITS.
2. SEE SECTIONS ON CIVIL PLANS FOR ACTUAL PAVEMENT DESIGN.

B4 CONDUIT SECTION, 2-WAY, UNDER TAXIWAY PAVEMENT

SCALE: NTS

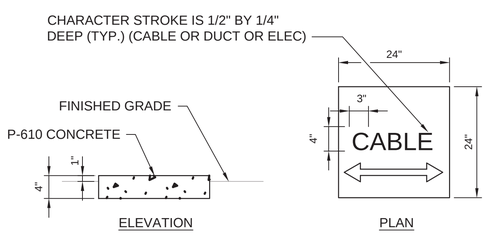

NOTES:

1. INSTALL DUCT MARKERS AT 200' INTERVALS ALONG 2" CONDUIT HOMERUN ROUTE. DUCT MARKERS MUST BE INCIDENTAL TO THE NON-METALLIC CONDUIT INSTALLATION.
2. HAND LETTERING NOT ALLOWED ON MARKERS. LETTERING IS MUST BE BOLDLY IMPRESSED. LINE WIDTH MUST BE 1/2" MINIMUM. DEPTH OF IMPRESSION MUST BE 1/4" MINIMUM.
3. ARROW ON MARKER TO INDICATE DIRECTION OF DUCTS (WHERE APPLICABLE).
4. MARKERS ARE (P-610) CONCRETE WITH A MINIMUM OF 4" IN THICKNESS.

A1 CABLE OR DUCT MARKER DETAIL

SCALE: NTS

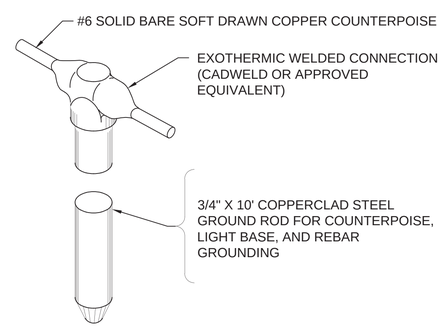

NOTES:

1. GROUND RODS MUST BE INSTALLED NOT MORE THAN 500 FEET APART FOR COUNTERPOISE AS SHOWN ON LAYOUT PLAN SHEETS.
2. ONE GROUND ROD MUST BE INSTALLED AT EACH LIGHT BASE FOR GROUNDING THE LIGHT BASE AND ASSOCIATED STEEL REINFORCEMENT.

A2 EXOTHERMIC WELD TO GROUND ROD DETAIL

SCALE: NTS

STATE OF MISSOURI
STEVEN D. STRATTON
NUMBER
PE-2006024920
PROFESSIONAL ENGINEER
01/20/2026
SEAL

Jacobs / BURNS & McDONNELL
JACOBS/B&M, A JOINT VENTURE
1100 NORTH GLEBE ROAD
SUITE 500
ARLINGTON, VA 22201
A/E Contract No. N62742-20-D-0002
Delivery Order No. 0027 N6274219F0015
JCG NO. D3438603
A/E INFO

APPROVED
FOR COMMANDER NAVFAC DATE 02/02/2026

ACTIVITY
AFIMSC APPROVAL PER NAVFAC SAT-TO CHECKLIST

SATISFACTORY TO DATE 31 DEC 2025

DES: DSB	DRW: DSB	REV: SDS	
PM/DM			KKK
BRANCH MANAGER			SMK
CHIEF ENG/ARCH			SMK
FIRE PROTECTION			RO

DEPARTMENT OF THE NAVY
NAVAL FACILITIES ENGINEERING SYSTEMS COMMAND
NAVAL FACILITIES ENGINEERING SYSTEMS COMMAND ~ PACIFIC
JOINT REGION MARIANAS (JRM)
NAVFAC PACIFIC
GUAM
ANDERSEN AIR FORCE BASE
FY24 AJJY183012 (P-012),
PDI: NORTH AIRCRAFT PARKING RAMP
AIRFIELD LIGHTING DETAILS

SCALE: AS SHOWN
EPROJECTS NO.: 1665555
CONSTR CONTROL NO.
NAVFAC DRAWING NO. 17361910
SHEET 287 OF 377
EA503

REDESIGN FINAL SUBMITTAL

IF SHEET IS LESS THAN 22" X 34"
REDUCED PRINT. USE GRAPHIC SCALES

FILE NAME: Z:\Clients\ANF\USNavy\Pac\133097_GuamP012NAR\Design\Elec\Sheets\P012_1665555_EA502.dwg
LAYOUT NAME: EA503
PLOTTED: 01/14/2026 9:31am
USER: kdpinkley

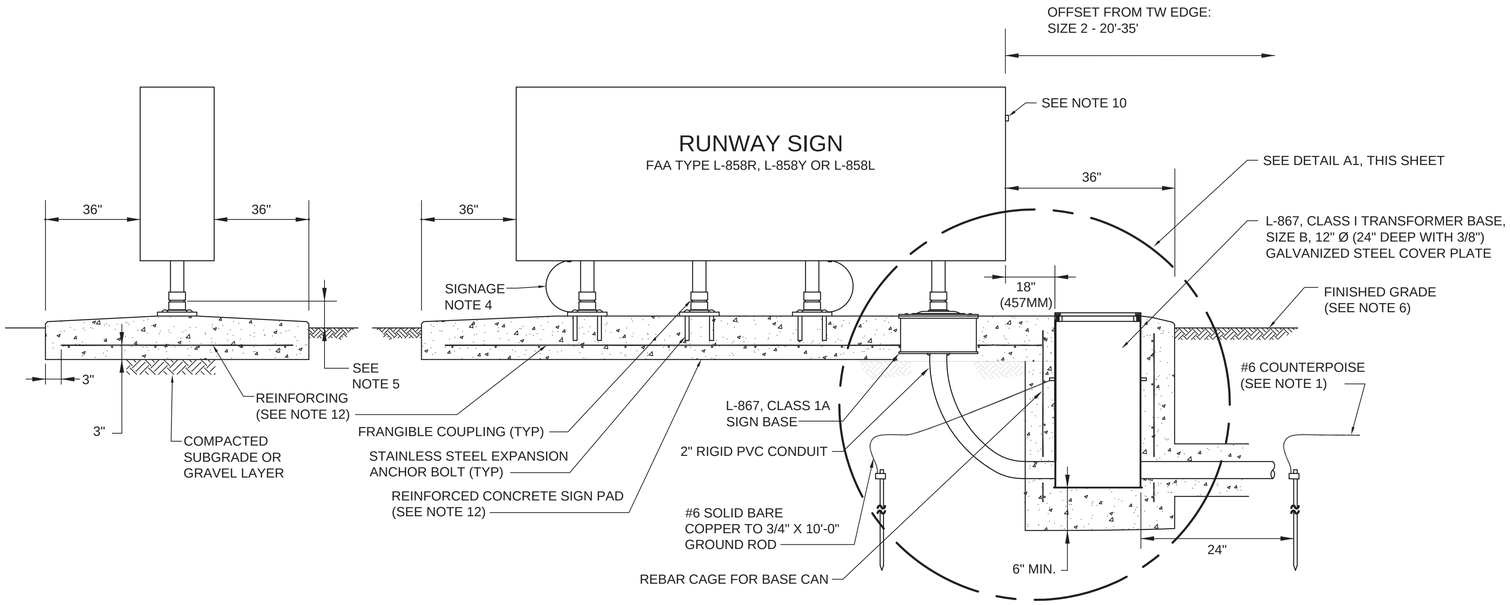

C2 TAXIWAY GUIDANCE SIGN

SCALE: NTS

SIGNAGE NOTES:

1. DO NOT CONNECT COUNTERPOISE TO THE TRANSFORMER BASE. CONNECT COUNTERPOISE TO SEPARATE GROUND ROD.
2. SIGN PAD MUST HAVE A 1/2-INCH CHAMFER ON ALL EXPOSED HORIZONTAL EDGES. EXTEND PAD 36-INCHES CLEAR ON ALL SIDES OF SIGN. SLOPE THE TOP SURFACE TO DRAIN AWAY FROM SIGN,1% (1/8-INCH/FOOT). THE TOP OF THE PAD MUST BE 1-INCH ABOVE THE SURROUNDING GRADE.
3. MAXIMUM OVERALL SIGN LENGTH: SIZE (2) 145-INCH.
4. ONE TETHER AT EACH END OF THE SIGN IF SEPARATE SIGN MODULES ARE CONNECTED TOGETHER WITHIN A CONTINUOUS FRAME.
5. THE FRANGIBILITY POINT MUST BE NO GREATER THAN 3-INCHES ABOVE THE GRADE ADJACENT TO THE PAD.
6. SURROUNDING GRADE MUST SLOPE 1/4-INCH PER FOOT AWAY FROM THE PAD FOR 15-FEET. SOD OR SEED IN ACCORDANCE WITH CIVIL SPECIFICATIONS AS REQUIRED.
7. PAD THICKNESS AND REINFORCING WILL VARY DEPENDING ON THE LENGTH AND NUMBER OF SIGN MODULES INSTALLED AS WELL AS THE WIND LOADING (JET BLAST EXPECTED).
8. THE SIGN'S BOLTING PATTERN AND ANCHORING METHOD MUST BE PER MANUFACTURER'S RECOMMENDATIONS.
9. GROUND SIGN FIXTURE WITH #6 AWG BARE TO STAKE OR BASE CAN. SEE MANUFACTURER'S WRITTEN INSTRUCTION FOR BONDING DETAILS.
10. SIGN MUST BE PROVIDED WITH OPTIONAL POWER SWITCH.
11. CONCRETE FOR SIGN BASE MUST CONFORM TO SPECIFICATION P-610.
12. REINFORCEMENT FOR SIGN BASE AND BASE CANS MUST BE #4 TYPE ASTM GRADE 60. REINFORCEMENT MUST HAVE A MINIMUM 2" COVER.
13. PROVIDE ALL NECESSARY EQUIPMENT FOR AIRFIELD SIGNAGE FOR A COMPLETE INSTALLATION INCLUDING BUT NOT LIMITED TO: BASE CAN AND COVER, GROUNDING ELECTRODE AND ROD, CONDUIT AND CABLE, ISOLATION TRANSFORMER, AND CONCRETE SIGN FOUNDATION, WHICH MUST BE INCIDENTAL TO SIGN INSTALLATION.

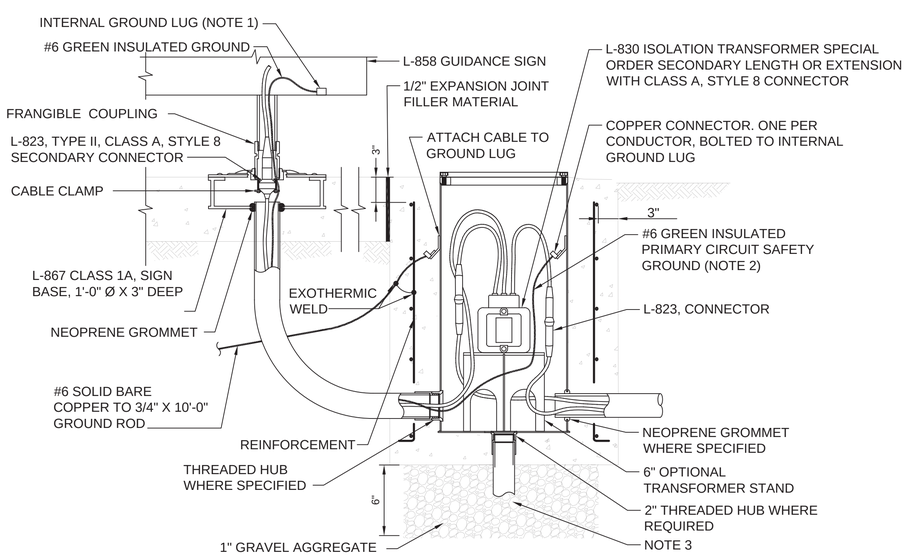

NOTES:

1. SEE SPECIFICATIONS FOR ADDITIONAL GROUNDING REQUIREMENTS INSIDE THE SIGN.
2. GROUNDING CONDUCTORS MUST BE THWN-2 OR XHHW-2.
3. INSTALL GRAVEL SUMP (FRENCH DRAIN) BELOW FIXTURE BASE. CAUTION SHOULD BE TAKEN TO PREVENT THE UNDERMINING OF THE SIGN FOUNDATION. GRAVEL SUMP MUST BE 12" DIA MIN. 6" DEEP WITH 1" GRAVEL AGGREGATE.

A1 SIGN BASE POWER LEG MOUNTING DETAIL

SCALE: NTS

GENERAL NOTES:

1. MATERIALS AND BASE DETAILS MUST BE SUBMITTED TO THE ENGINEER FOR APPROVAL PRIOR TO INSTALLATION.
2. SECONDARY CONNECTION FROM ISOLATION TRANSFORMER MUST BE SECURED TO FLANGIBLE COUPLING PER MANUFACTURER'S WRITTEN INSTRUCTION. IF FRANGIBLE COUPLING IS BROKEN, THE FIXTURE MUST BE DISCONNECTED FROM ISOLATION TRANSFORMERS WITHOUT DAMAGE.
3. SEE CIVIL DRAWINGS FOR PAVEMENT DESIGN. COORDINATE CAN INSTALLATION WITH CIVIL DETAILS.
4. LIGHT BASES MUST CONFORM TO LATEST EDITION OF FAA ADVISORY CIRCULAR 150/5345-42, SPECIFICATION FOR AIRPORT LIGHT BASES AND TRANSFORMER HOUSINGS. ORIENTATION AND NUMBER OF HUBS REQUIRED ON LIGHT BASES VARY. SEE LAYOUT PLAN SHEETS FOR DETAILS.
5. ONE 3/4" X 10' GROUND ROD MUST BE INSTALLED AT EACH CAN BASE AND CONNECTED TO THE BASE AND REBAR CAGE WITH A #6 SOLID AWG GROUND. IF REQUIRED GROUND RESISTANCE IS NOT ACHIEVED, ADD ADDITIONAL GROUND RODS.
6. GROUND CONNECTIONS MUST BE INSPECTED BY RPR PRIOR TO PLACEMENT OF CONCRETE.
7. CONDUIT MUST BE 2" SCHEDULE 40 PVC.
8. SUBMIT METHOD OF INSTALLATION FOR APPROVAL THAT PROVIDES STEP-BY-STEP SEQUENCE OF OPERATIONS INCLUDING, BUT NOT LIMITED TO, CORING AND TRENCHING, BASE CAN, CONDUIT, COUNTERPOISE, GROUNDING, TIE-BAR CAGE AND CONCRETE PLACEMENT.
9. SUBGRADE COMPACTION FOR BACKFILL ON SIGNS, CANS, AND BOXES MUST CONFORM TO SPECIFICATION P-152.

NAVFAC

STATE OF MISSOURI
STEVEN D. STRATTON
NUMBER PE-2006024920
PROFESSIONAL ENGINEER
01/20/2026
SEAL

Jacobs / BURNS & McDONNELL
JACOBS/B&M, A JOINT VENTURE
1100 NORTH GLEBE ROAD
SUITE 500
ARLINGTON, VA 22201

A/E Contract No. N62742-20-D-0002
A/E Task Order No. N62742-23JF0315
JEG NO. D3438603
A/E INFO

APPROVED
FOR COMMANDER NAVFAC DATE 02/02/2026

ACTIVITY
AFIMSC APPROVAL PER NAVFAC SAT-TO CHECKLIST

SATISFACTORY TO DATE 31 DEC 2025

DES:	DSB	DRW: DSB	REV: SDS
PM/DM			KKK
BRANCH MANAGER			SMK
CHIEF ENG/ARCH			SMK
FIRE PROTECTION			RO

DEPARTMENT OF THE NAVY
NAVAL FACILITIES ENGINEERING SYSTEMS COMMAND
NAVFAC PACIFIC
NAVAL FACILITIES ENGINEERING SYSTEMS COMMAND ~ PACIFIC
JOINT REGION MARIANAS (JRM)
ANDERSEN AIR FORCE BASE
GUAM

FY24 AJJY183012 (P-012)
PDI: NORTH AIRCRAFT PARKING RAMP

AIRFIELD LIGHTING DETAILS

SCALE: AS SHOWN
EPROJECTS NO.: 1665555
CONSTR CONTROL NO.
NAVFAC DRAWING NO. 17361911
SHEET 288 OF 377

EA504

REDESIGN FINAL SUBMITTAL

IF SHEET IS LESS THAN 22" X 34" REDUCED PRINT. USE GRAPHIC SCALES

FILE NAME: Z:\Clients\ANF\USNavy\Pac\133097_GuamP012NAR\Design\Elec\Sheets\P012_1665555_EA502.dwg
LAYOUT NAME: EA504
PLOTTED: 01/14/2026 9:31am
USER: kdpinkley

GENERAL NOTES - SITE PLANS

A. SEE SHEETS E-001 & E-002 FOR ABBREVIATIONS, LEGENDS AND GENERAL NOTES.

TAXIWAY LIGHT FIXTURE LOCATIONS		
LIGHT FIXTURE	NORTHING	EASTING
T3-101	686894.83	386181.43
T3-102	686940.21	386160.51
T3-103	686984.13	386140.13
T3-104	687028.80	386119.46
T3-105	687070.19	386101.00
T3-106	687111.66	386082.50
T3-107	687187.60	386048.50
T3-108	687263.46	386014.53
T3-109	687339.32	385980.57
T3-110	687358.60	385970.07
T3-111	687376.01	385956.64
T3-112	687391.11	385940.67
T3-113	687403.52	385922.54
T3-114	687412.98	385902.71
T3-115	687419.18	385881.63
T3-116	687422.00	385859.84
T3-117	687421.20	385837.81
T3-118	687417.32	385816.27
T3-119	687409.93	385795.57
T3-120	687393.61	385759.09
T3-121	687346.13	385652.97
T3-122	687282.33	385510.37
T3-123	687234.85	385404.25
T3-124	687218.53	385367.77
T3-125	687378.11	386067.28
T3-126	687226.20	386135.41
T3-127	687150.44	386169.13
T3-128	687119.29	386188.30
T3-129	687094.17	386214.89
T3-130	687076.79	386247.08
T3-131	687068.34	386282.67
T3-132	687069.40	386319.23
T3-133	687079.80	386354.05
T3-134	687113.33	386428.73
T3-135	687146.89	386503.48
T3-136	687180.38	386578.09
T3-137	687199.55	386609.17
T3-138	687226.11	386634.23
T3-139	687258.25	386651.57
T3-140	687293.77	386660.01
T3-141	687330.28	386658.98
T3-142	687364.52	386648.27
T3-143	687401.79	386632.22
T3-144	687439.28	386615.44
T3-145	687513.29	386582.31

TAXIWAY LIGHT FIXTURE LOCATIONS		
LIGHT FIXTURE	NORTHING	EASTING
T3-146	687587.31	386549.22
T3-147	687624.80	386532.43
T3-148	687661.32	386516.11
T3-149	687682.01	386501.43
T3-150	687695.50	386479.95
T3-151	687699.75	386454.94
T3-152	687694.10	386430.20
T3-153	687677.78	386393.68
T3-154	687653.75	386339.98
T3-155	687613.38	386249.77
T3-156	687573.03	386159.56
T3-157	687548.99	386105.87
T3-158	687532.67	386069.35
T3-159	687518.00	386048.66
T3-160	687496.52	386035.17
T3-161	687471.52	386030.92
T3-162	687446.79	386036.56
T3-163	687759.37	386576.33
T3-164	687700.11	386602.83
T3-165	687663.59	386619.15
T3-166	687626.10	386635.94
T3-167	687552.08	386669.03
T3-168	687478.07	386702.15
T3-169	687441.24	386718.94
T3-170	687402.25	386736.07
T3-171	687372.66	386754.09
T3-172	687348.42	386778.48
T3-173	687330.84	386808.20
T3-174	687321.04	386841.30
T3-175	687319.60	386875.79
T3-176	687327.34	386908.85

SIGNAGE LOCATIONS		
SIGN	NORTHING	EASTING
T3-S01	687170.84	386214.78
T3-S02	687467.22	386082.19
T3-S03	687720.49	386648.48
T3-S04	687422.71	386781.70
T3-S05	687369.89	386889.77
T3-S06	687222.12	386559.43
T3-S07	687125.91	386333.44

A1 AIRFIELD LIGHTING POINTS SCHEDULE
SCALE NTS

STATE OF MISSOURI
STEVEN D. STRATTON
NUMBER
PE-2006024920
PROFESSIONAL ENGINEER
01/20/2026
SEAL

Jacobs / BURNS MCDONNELL
JACOBS/B&M, A JOINT VENTURE
1100 NORTH GLEBE ROAD
SUITE 500
ARLINGTON, VA 22201

A/E Contract No. N62742-20-D-0002
A/E Task Order No. N6274221F0315
JCG NO. 234380603
A/E INFO

APPROVED
FOR COMMANDER NAVFAC DATE 02/02/2026

ACTIVITY
AFIMSC APPROVAL PER NAVFAC SAT-TO CHECKLIST

SATISFACTORY TO DATE 31 DEC 2025

DES: DSB DRW: DSB REV: SDS
PM/DM KKK
BRANCH MANAGER SMK
CHIEF ENG/ARCH SMK
FIRE PROTECTION RO

DEPARTMENT OF THE NAVY
NAVAL FACILITIES ENGINEERING SYSTEMS COMMAND
NAVFAC PACIFIC
NAVAL FACILITIES ENGINEERING SYSTEMS COMMAND – PACIFIC
JOINT REGION MARIANAS (JRM)
ANDERSEN AIR FORCE BASE
GUAM
FY24 AUY183012 (P-012),
PDI: NORTH AIRCRAFT PARKING RAMP
AIRFIELD LIGHTING POINTS SCHEDULE

SCALE: AS SHOWN
EPROJECTS NO.: 1665555
CONSTR CONTROL NO.
NAVFAC DRAWING NO. 17361912
SHEET 289 OF 377
EA701

REDESIGN FINAL SUBMITTAL

IF SHEET IS LESS THAN 22" X 34" REDUCED PRINT. USE GRAPHIC SCALES

FILE NAME: Z:\Clients\ANF\USNavy\Poc\133097_Guam\P012NAR\Design\Elec\Sheets\P012_1665555_EA101-EA102.dwg
LAYOUT NAME: EA701
PLOTTED: 01/14/2026 9:33am
USER: ledpinkley

GENERAL NOTES

A.	SEE SHEETS E-001 & E-002 FOR ABBREVIATIONS, LEGENDS AND GENERAL NOTES.
B.	CIRCUITRY ON THIS SHEET IS SHOWN AS AN ANNOTATION ONLY FOR CLARITY.
C.	CONTRACTOR TO MODIFY AIRFIELD LIGHTING CONTROL MONITORING SYSTEM TO SHOW AIRFIELD MODIFICATIONS. EXISTING SYSTEM IS MANUFACTURED BY CROUSE-HINDS.
D.	CIRCUIT T3 MUST REMAIN ACTIVE DURING CONSTRUCTION. PROVIDE AND MAINTAIN A JUMPER BETWEEN EXISTING LIGHT FIXTURES T3-109 AND T3-117.
E.	DISRUPTIONS TO ELECTRICAL CIRCUITS POWERING AIRFIELD SYSTEMS AND LIGHTNING MUST BE COORDINATED AT LEAST 72 HOURS IN ADVANCE WITH AIRFIELD MANAGEMENT. WORK SHOULD BE COMPLETED DURING DAYLIGHT AND WITHIN NORMAL DUTY HOURS, MONDAY-FRIDAY, 0800-1700 AND ONLY OUTSIDE THESE HOURS WHEN AGREED UPON OR DURING EXTENUATING CIRCUMSTANCES.

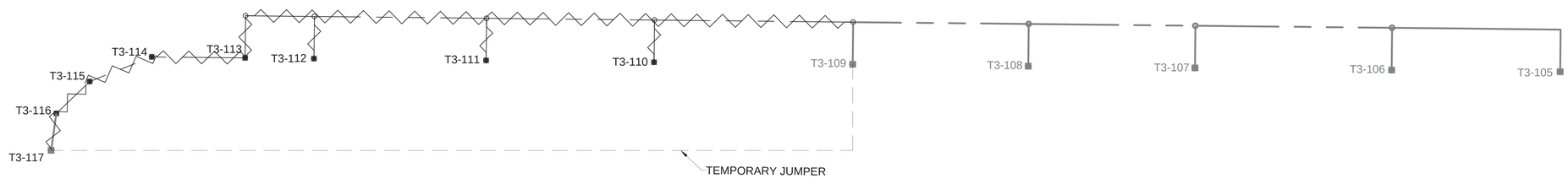

C1 AIRFIELD LIGHTING DEMOLITION ONE-LINE DIAGRAM

SCALE: NTS

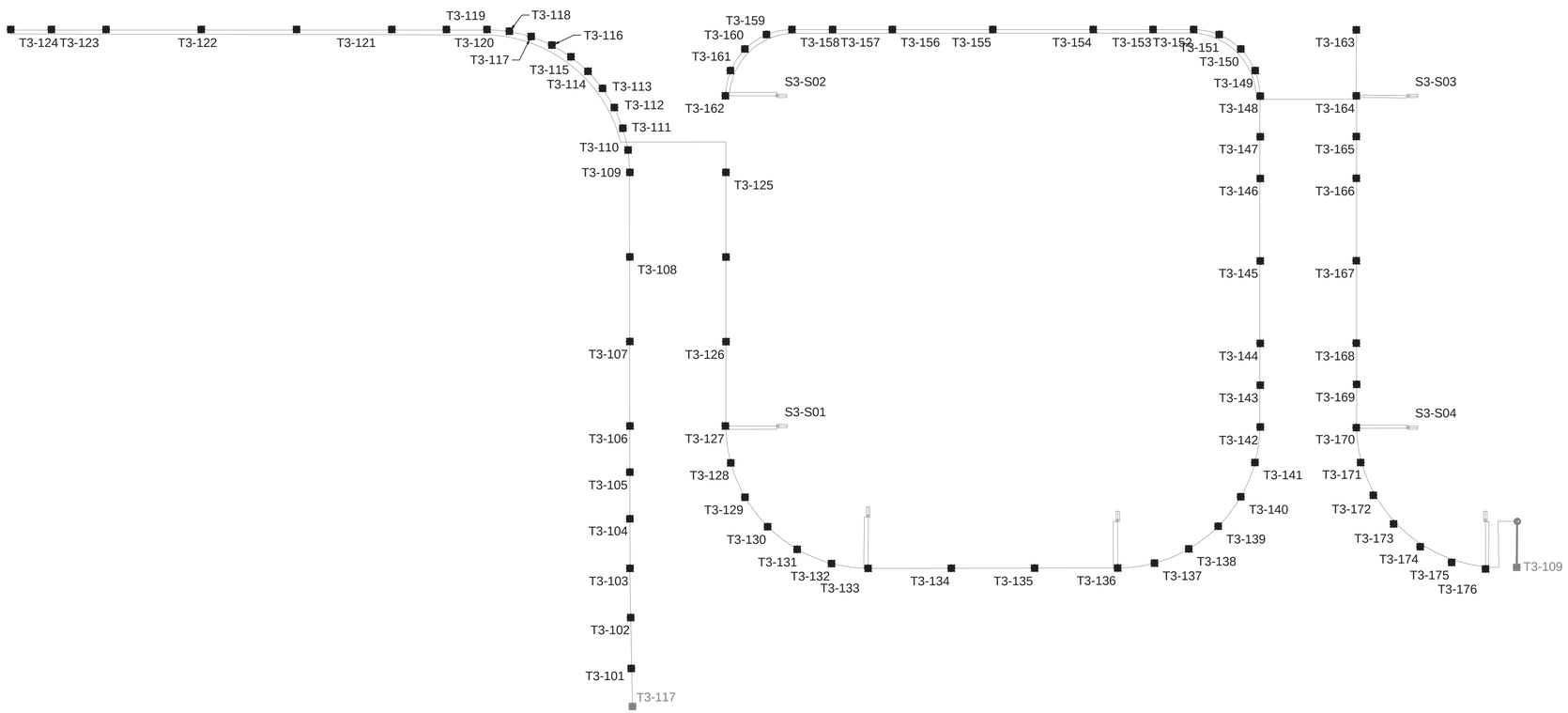

A1 AIRFIELD LIGHTING ONE-LINE DIAGRAM

SCALE: NTS

STATE OF MISSOURI
STEVEN D. STRATTON
NUMBER
PE-2006024920
PROFESSIONAL ENGINEER

01/20/2026

SEAL

Jacobs / BURNS McDONNELL

JACOBS/B&M, A JOINT VENTURE
1100 NORTH GLEBE ROAD
SUITE 500
ARLINGTON, VA 22201

A/E Contract No. N62742-20-D-0002
A/E Task Order No. N62742215F0315
JCG NO. 1DA30603

A/E INFO

APPROVED

FOR COMMANDER NAVFAC DATE 02/02/2026

ACTIVITY
AFIMSC APPROVAL PER NAVFAC SAT-TO CHECKLIST

SATISFACTORY TO DATE 31 DEC 2025

DES: DSB	DRW: DSB	REV: SDS	
PM/DM			KKK
BRANCH MANAGER			SMK
CHIEF ENG/ARCH			SMK
FIRE PROTECTION			RO

DEPARTMENT OF THE NAVY
NAVAL FACILITIES ENGINEERING SYSTEMS COMMAND
NAVFAC PACIFIC
NAVAL FACILITIES ENGINEERING SYSTEMS COMMAND – PACIFIC
JOINT REGION MARIANAS (JRM)
ANDERSEN AIR FORCE BASE
GUAM

FY24 AUY183012 (P-012),
PDI: NORTH AIRCRAFT PARKING RAMP

AIRFIELD LIGHTING ONE-LINE DIAGRAMS

SCALE: AS SHOWN
EPROJECTS NO.: 1665555
CONSTR CONTROL NO.
NAVFAC DRAWING NO. 17361913
SHEET 290 OF 377

EA702

REDESIGN FINAL SUBMITTAL

FILE NAME: Z:\Clients\ANF\USNavy\Pac\133097_GuamP012NAR\Design\Elec\Sheets\P012_1665555_EA702.dwg
LAYOUT NAME: Layout1
PLOTTED: 01/14/2026 10:11am
USER: bdpinkley

IF SHEET IS LESS THAN 22" X 34" REDUCED PRINT. USE GRAPHIC SCALES

SYMBOLS - TELECOMMUNICATION SITE PLANS

OUTSIDE PLANT DRAWINGS, DIAGRAMS

- MAINTENANCE HOLE. SEE DETAILS ON SHEET TS501
- EXISTING MAINTENANCE HOLE
- UC — UC — COMMUNICATION DUCTBANK
- Cx — Cx — EXISTING COMMUNICATION DUCTBANK
- CATV — CATV — EXISTING CABLE TV/UTILITY DUCTBANK
- EXISTING DUCTBANK DEMOLITION
- SPLICE CASE

OUTSIDE PLANT GENERAL NOTES

1. EXISTING FACILITIES MUST REMAIN OPERATIONAL FOR DURATION OF CONSTRUCTION. TELECOMMUNICATIONS (OSP) DUCTBANKS AND FIBER OPTIC CABLING REQUIRED TO SUPPORT EXISTING FACILITIES MUST BE IN PLACE PRIOR TO DEMOLITION.
2. LOCATE AND VERIFY TELECOMMUNICATION SYSTEMS WITHIN THE IDENTIFIED AREAS PRIOR TO STARTING WORK. DISCREPANCIES BETWEEN INFORMATION SHOWN AND ACTUAL CONDITIONS MUST BE BROUGHT TO THE ATTENTION OF THE CONTRACTING OFFICER.
3. PROVIDE MATERIALS, LABOR AND EQUIPMENT REQUIRED FOR A COMPLETE AND OPERATIONAL INSTALLATION. MATERIALS AND WORKMANSHIP MUST FULLY COMPLY WITH THE REQUIREMENTS OF THE LATEST EDITION OF TIA STANDARDS.
4. DUCTS CLASSIFIED STUB-OUTS MUST BE PLUGGED INSIDE THE MAINTENANCE HOLE OR BUILDING, TAGGED IDENTIFYING THEM AS STUB-OUTS AND CAPPED ON THE FAR END TO PREVENT SOLIDS AND WATER FROM ENTERING THE DUCT. A LOCATOR BALL MUST BE PLACED AT THE STUB-OUT LOCATION.
5. TELECOMMUNICATION MAINTENANCE HOLES MUST BE INSTALLED IN ACCORDANCE WITH THE MANUFACTURER'S INSTRUCTIONS AND IN ACCORDANCE WITH TIA STANDARDS. MAINTENANCE HOLES MUST HAVE A MINIMUM COMPRESSIVE STRENGTH OF 7000 PSI AT 28-DAYS, MEET AASHTO H-20 LOADING, INCLUDE GALVANIZED EMBEDDED PULLING IRONS IN EACH CORNER, TOP AND BOTTOM, INCLUDE FOUR GALVANIZED C-CHANNELS ON EACH LONGITUDINAL SIDE, AND MUST BE EQUIPPED WITH PVC DUCT TERMINATIONS AT POINTS OF ENTRY.
6. INSTALL DUCTS IN MAINTENANCE HOLES AT THE LOWEST AVAILABLE DUCT POSITIONS TO ALLOW DUCTS TO BE PLACED ON TOP IF REQUIRED IN THE FUTURE. COORDINATE WITH POWER DUCT BANK INSTALLATION AND AVOID PLACEMENT OF DUCTS THAT WOULD PREVENT THE ABILITY TO INSTALL FUTURE DUCTS. TRANSITION DUCT BANKS FROM TRENCH DEPTH TO LOWER DUCT WINDOWS IN NO LESS THAN 30-LINEAR FEET TO MAINTAIN MINIMUM BEND RADIUS. CONCRETE ENCASEMENT MUST SURROUND DUCTS WITH NO VOIDS. DUCTS MUST BE TESTED WITH A 12-INCH NON-FLEXIBLE MANDREL WITH A DIAMETER THAT IS 1/2" LESS THAN THE DUCT INSIDE DIAMETER IN MAIN RUNS. DUCTS, SUB-DUCTS AND INNERDUCTS MUST BE PLUGGED USING UNIVERSAL SCREW-TYPE DUCT PLUGS IN MAINTENANCE HOLES.

REGISTERED COMMUNICATIONS DISTRIBUTION DESIGNER
Bicsi
Tyson Q Banks
BICSI ID # 248575
EXPIRES 12-31-26
RCDD
01/20/2026

SYM	DESCRIPTION	DATE

NAVFAC

STATE OF MISSOURI
STEVEN D. STRATTON
NUMBER PE-2006024920
PROFESSIONAL ENGINEER
01/20/2026
SEAL

Jacobs / BURNS McDONNELL
JACOBS/B&M, A JOINT VENTURE
1100 NORTH GLEBE ROAD
SUITE 500
ARLINGTON, VA 22201
A/E Contract No. N62470-20-D-0002
A/E Task Order No. N62470-FE-015
JCG NO. 224/3003
A/E INFO

APPROVED
FOR COMMANDER NAVFAC DATE 02/02/2026

ACTIVITY
AFIMSC APPROVAL PER NAVFAC SAT-TO CHECKLIST

SATISFACTORY TO DATE 31 DEC 2025

DES: TQB	DRW: BDP	REV: SDS
PM/DM		KKK
BRANCH MANAGER		SMK
CHIEF ENG/ARCH		SMK
FIRE PROTECTION		RO

DEPARTMENT OF THE NAVY
NAVAL FACILITIES ENGINEERING SYSTEMS COMMAND
NAVFAC PACIFIC
NAVAL FACILITIES ENGINEERING SYSTEMS COMMAND ~ PACIFIC
JOINT REGION MARIANAS (JRM)
ANDERSEN AIR FORCE BASE
GUAM

FY24 AJJY183012 (P-012),
PDI: NORTH AIRCRAFT PARKING RAMP

TELECOMMUNICATIONS SITE LEGEND

SCALE: AS SHOWN
EPROJECTS NO.: 1665555
CONSTR CONTROL NO.
NAVFAC DRAWING NO. 17361914
SHEET 291 OF 377

TS001

REDESIGN FINAL SUBMITTAL

IF SHEET IS LESS THAN 22" X 34"
REDUCED PRINT. USE GRAPHIC SCALES

FILE NAME: C:\Revit_Projects\133097_E_Central_bdpinkley@burnsmcd.com.rvt
LAYOUT NAME: TELECOMMUNICATIONS SITE LEGEND
PLOTTED: 1/14/2026 9:25:00 AM
USER: BDP

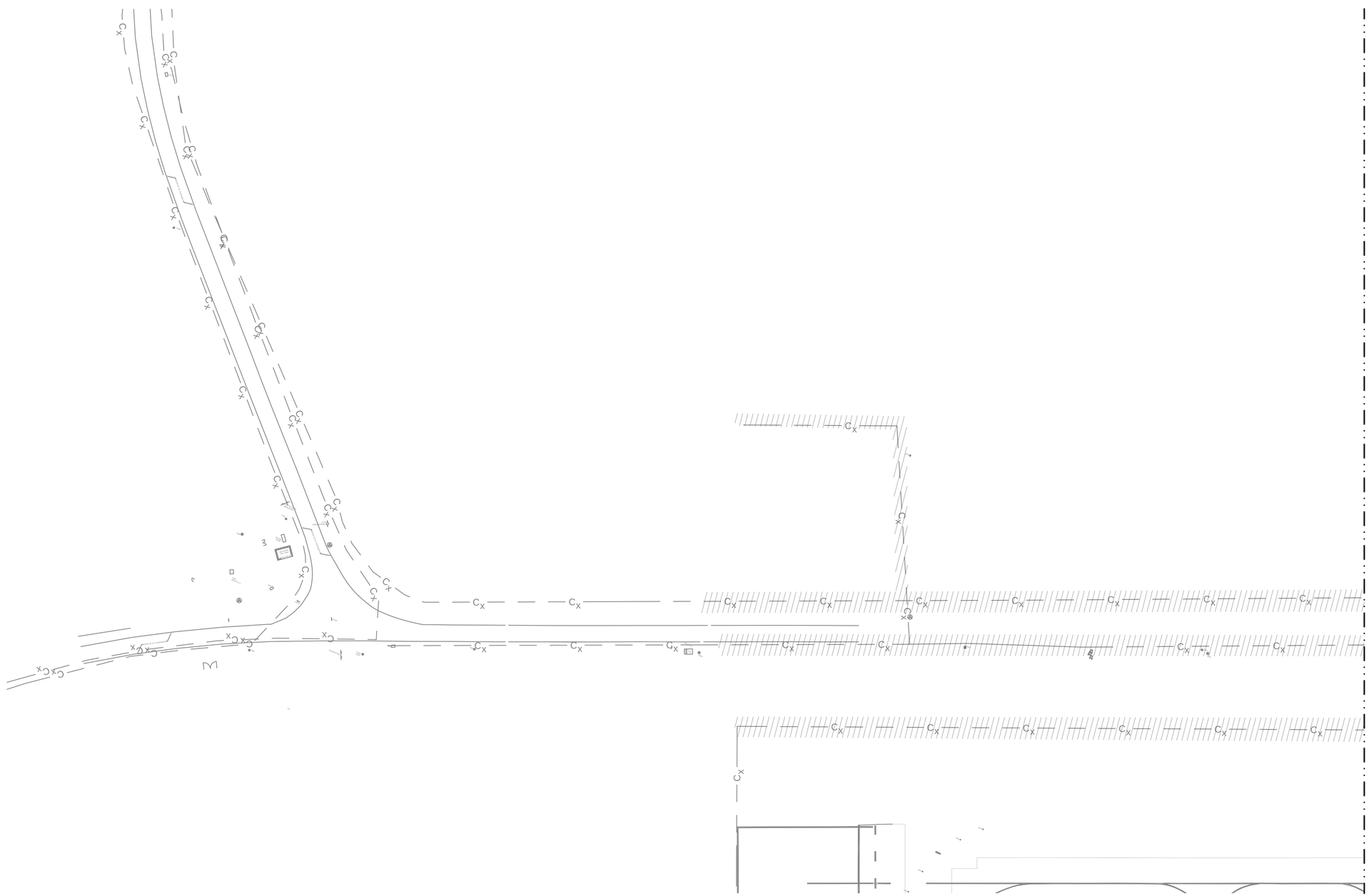

A1 TELECOMMUNICATIONS SITE DEMOLITION PLAN 1

SCALE 1" = 80'

MATCHLINE, SEE TD102

GENERAL NOTES - SITE PLANS

A.	THESE DRAWINGS ARE SUPPLEMENTAL TO THE PROJECT SPECIFICATIONS, ARE SCHEMATIC IN NATURE AND MUST NOT BE USED FOR FIELD INSTALLATION. FIELD INSTALLATION MUST BE IN ACCORDANCE WITH APPROVED SHOP DRAWINGS. SEE PROJECT SPECIFICATIONS FOR SHOP DRAWING REQUIREMENTS. THE LAYOUT OF TELECOMMUNICATIONS EQUIPMENT MUST BE FULLY COORDINATED WITH OTHER TRADES AND EQUIPMENT PRIOR TO SUBMISSION OF SHOP DRAWINGS FOR APPROVAL.
B.	SEE SHEET TS001 FOR PROJECT GENERAL NOTES, SYMBOL LEGEND AND ABBREVIATIONS.
C.	COORDINATE MAINTENANCE HOLE PLACEMENT SCHEDULE WITH CONTRACTING OFFICER SUCH THAT PLACEMENT CAN BE WITNESSED BY GOVERNMENT.
D.	COORDINATE DUCTBANK INSPECTION WITH CONTRACTING OFFICER SUCH THAT GOVERNMENT MAY INSPECT PRIOR TO POURING CONCRETE REINFORCEMENT.
E.	LOCATIONS OF MAINTENANCE HOLES AND DUCTBANKS ARE APPROXIMATE. CONFIRM THE LOCATION OF THE MAINTENANCE HOLES AND DUCTBANKS WITH THE CONTRACTING OFFICER. OBTAIN CONTRACTING OFFICER APPROVAL OF MAINTENANCE HOLE LOCATIONS AND ORIENTATION PRIOR TO THE COMMENCEMENT OF WORK.
F.	INFRASTRUCTURE MUST BE INSTALLED AND CUT OVER PRIOR TO DEMOLITION WORK. COORDINATE CUTOVER WITH COMMUNICATION SQUADRON.

REGISTERED COMMUNICATIONS DISTRIBUTION DESIGNER
Bicsi
Tyson Q Banks
BICSI ID # 248575
EXPIRES 12-31-26
RCDD
01/20/2026

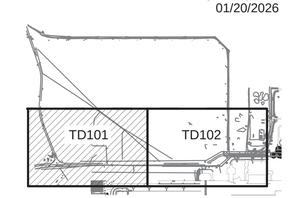

AREA KEY MAP

GRAPHIC SCALE

0 20' 80' 160'

SCALE: 1"=80'

NORTH ARROW

TRUE N

NAVFAC

STATE OF MISSOURI
STEVEN D. STRATTON
NUMBER
PE-2006024920
PROFESSIONAL ENGINEER

01/20/2026

SEAL

Jacobs / BURNS McDONNELL

JACOBS/B&M, A JOINT VENTURE
1100 NORTH GLEBE ROAD
SUITE 500
ARLINGTON, VA 22201

A/E Contract No. N62742-20-D-0002
A/E Task Order No. N62742215F0315
JCG NO. 234380603

A/E INFO

APPROVED

FOR COMMANDER NAVFAC DATE 02/02/2026

ACTIVITY
AFIMSC APPROVAL PER NAVFAC SAT-TO CHECKLIST

SATISFACTORY TO DATE 31 DEC 2025

DES:	TQB	DRW:	BDP	REV:	SDS

PM/DM	KKK
BRANCH MANAGER	SMK
CHIEF ENG/ARCH	SMK
FIRE PROTECTION	RO

DEPARTMENT OF THE NAVY
NAVFAC PACIFIC
NAVAL FACILITIES ENGINEERING SYSTEMS COMMAND
NAVAL FACILITIES ENGINEERING SYSTEMS COMMAND – PACIFIC
JOINT REGION MARIANAS (JRM)
ANDERSEN AIR FORCE BASE
GUAM

FY24 AUY183012 (P-012),
PDI: NORTH AIRCRAFT PARKING RAMP

TELECOMMUNICATIONS SITE DEMOLITION PLAN 1

SCALE: AS SHOWN
EPROJECTS NO.: 1665555
CONSTR CONTROL NO.
NAVFAC DRAWING NO. 17361915
SHEET 292 OF 377

TD101

REDESIGN FINAL SUBMITTAL

IF SHEET IS LESS THAN 22" X 34"
REDUCED PRINT. USE GRAPHIC SCALES

FILE NAME: Z:\Clients\ANF\USNavy\Foc\133097_Guam\P012NAR\Design\Elec\Sheets\P012_1665555_TD101-TD102.dwg
LAYOUT NAME: TD101
PLOTTED: 01/14/2026 9:25am
USER: bdpinkley

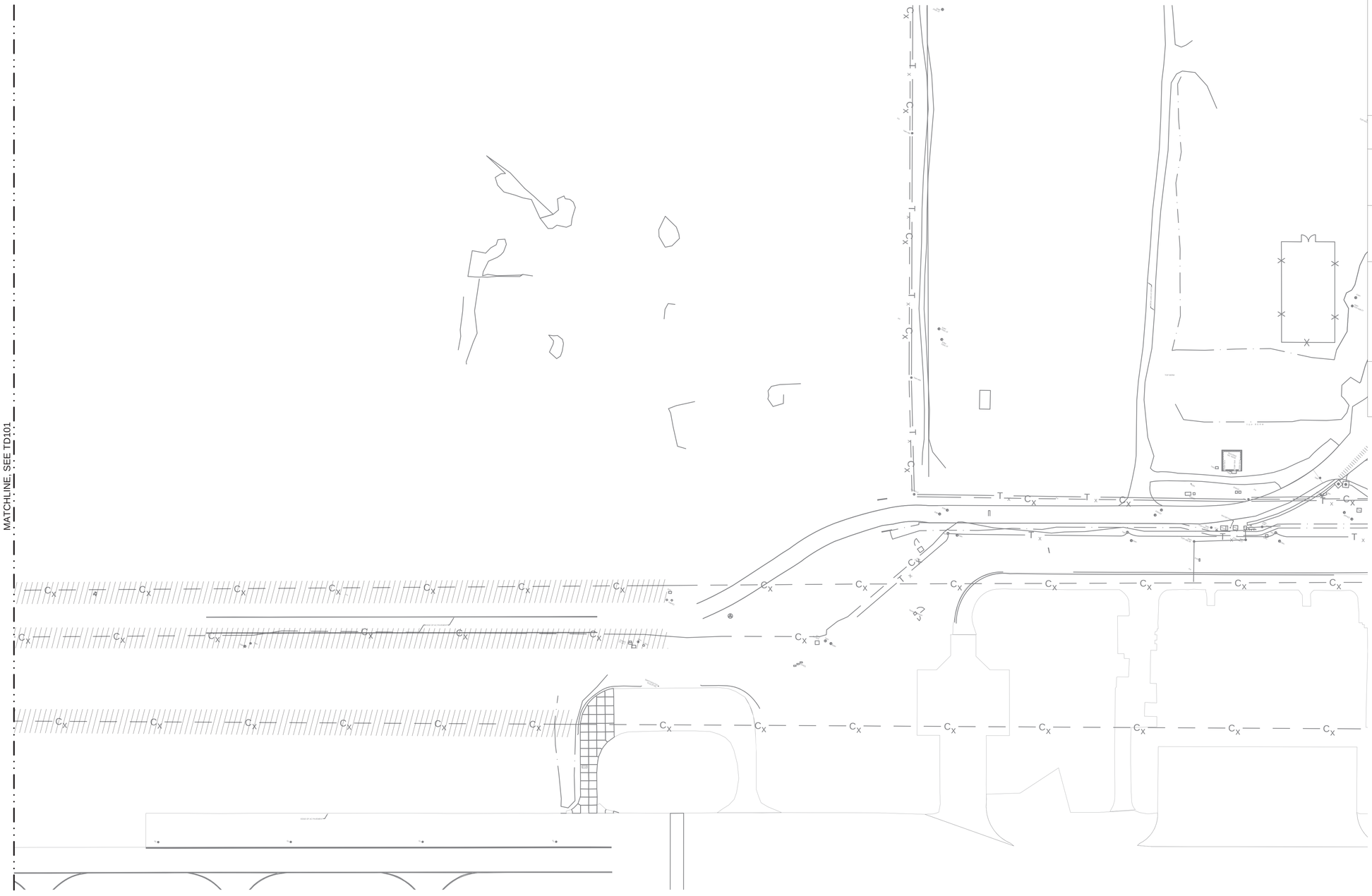

GENERAL NOTES - SITE PLANS

A.	THESE DRAWINGS ARE SUPPLEMENTAL TO THE PROJECT SPECIFICATIONS, ARE SCHEMATIC IN NATURE AND MUST NOT BE USED FOR FIELD INSTALLATION. FIELD INSTALLATION MUST BE IN ACCORDANCE WITH APPROVED SHOP DRAWINGS. SEE PROJECT SPECIFICATIONS FOR SHOP DRAWING REQUIREMENTS. THE LAYOUT OF TELECOMMUNICATIONS EQUIPMENT MUST BE FULLY COORDINATED WITH OTHER TRADES AND EQUIPMENT PRIOR TO SUBMISSION OF SHOP DRAWINGS FOR APPROVAL.
B.	SEE SHEET TS001 FOR PROJECT GENERAL NOTES, SYMBOL LEGEND AND ABBREVIATIONS.
C.	COORDINATE MAINTENANCE HOLE PLACEMENT SCHEDULE WITH CONTRACTING OFFICER SUCH THAT PLACEMENT CAN BE WITNESSED BY GOVERNMENT.
D.	COORDINATE DUCTBANK INSPECTION WITH CONTRACTING OFFICER SUCH THAT GOVERNMENT MAY INSPECT PRIOR TO POURING CONCRETE REINFORCEMENT.
E.	LOCATIONS OF MAINTENANCE HOLES AND DUCTBANKS ARE APPROXIMATE. CONFIRM THE LOCATION OF THE MAINTENANCE HOLES AND DUCTBANKS WITH THE CONTRACTING OFFICER. OBTAIN CONTRACTING OFFICER APPROVAL OF MAINTENANCE HOLE LOCATIONS AND ORIENTATION PRIOR TO THE COMMENCEMENT OF WORK.
F.	INFRASTRUCTURE MUST BE INSTALLED AND CUT OVER PRIOR TO DEMOLITION WORK. COORDINATE CUTOVER WITH COMMUNICATION SQUADRON.

A1 TELECOMMUNICATIONS SITE DEMOLITION PLAN 2

SCALE 1" = 80'

STATE OF MISSOURI
STEVEN D. STRATTON
NUMBER PE-2006024920
PROFESSIONAL ENGINEER
01/20/2026
SEAL

Jacobs / BURNS McDONNELL
JACOBS/B&M, A JOINT VENTURE
1100 NORTH GLEBE ROAD
SUITE 500
ARLINGTON, VA 22201

A/E Contract No. N62742-20-D-0002
A/E Task Order No. N6274221F0315
JCG NO. 234326003

A/E INFO

APPROVED
EVAN MIYAZ
FOR COMMANDER NAVFAC DATE 02/02/2026

ACTIVITY
AFIMSC APPROVAL PER NAVFAC SAT-TO CHECKLIST

SATISFACTORY TO DATE 31 DEC 2025

DES: TQB	DRW: BDP	REV: SDS	
PM/DM	KKK		
BRANCH MANAGER	SMK		
CHIEF ENG/ARCH	SMK		
FIRE PROTECTION	RO		

REGISTERED COMMUNICATIONS DISTRIBUTION DESIGNER
Bicsi
Tyson Q Banks
BICSI ID # 248575
EXPIRES 12 31 26
RCDD
01/20/2026

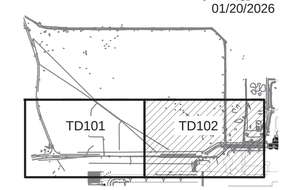

AREA KEY MAP

GRAPHIC SCALE
0 20' 80' 160'
SCALE: 1"=80'

NORTH ARROW
TRUE N

DEPARTMENT OF THE NAVY
NAVFAC PACIFIC
ANDERSEN AIR FORCE BASE

NAVAL FACILITIES ENGINEERING SYSTEMS COMMAND
NAVAL FACILITIES ENGINEERING SYSTEMS COMMAND – PACIFIC
JOINT REGION MARIANAS (JRM)
GUAM

FY24 AUY183012 (P-012),
PDI: NORTH AIRCRAFT PARKING RAMP

TELECOMMUNICATIONS SITE DEMOLITION PLAN 2

SCALE: AS SHOWN
EPROJECTS NO.: 1665555
CONSTR CONTROL NO.
NAVFAC DRAWING NO. 17361916
SHEET 293 OF 377

TD102

REDESIGN FINAL SUBMITTAL

IF SHEET IS LESS THAN 22" X 34" REDUCED PRINT. USE GRAPHIC SCALES

FILE NAME: Z:\Clients\ANF\USNavy\Poc\133097_GuamP012NAR\Design\Elec\Sheets\P012_1665555_TD101-TD102.dwg
LAYOUT NAME: TD102
PLOTTED: 01/14/2026 9:26am
USER: bdpinkey

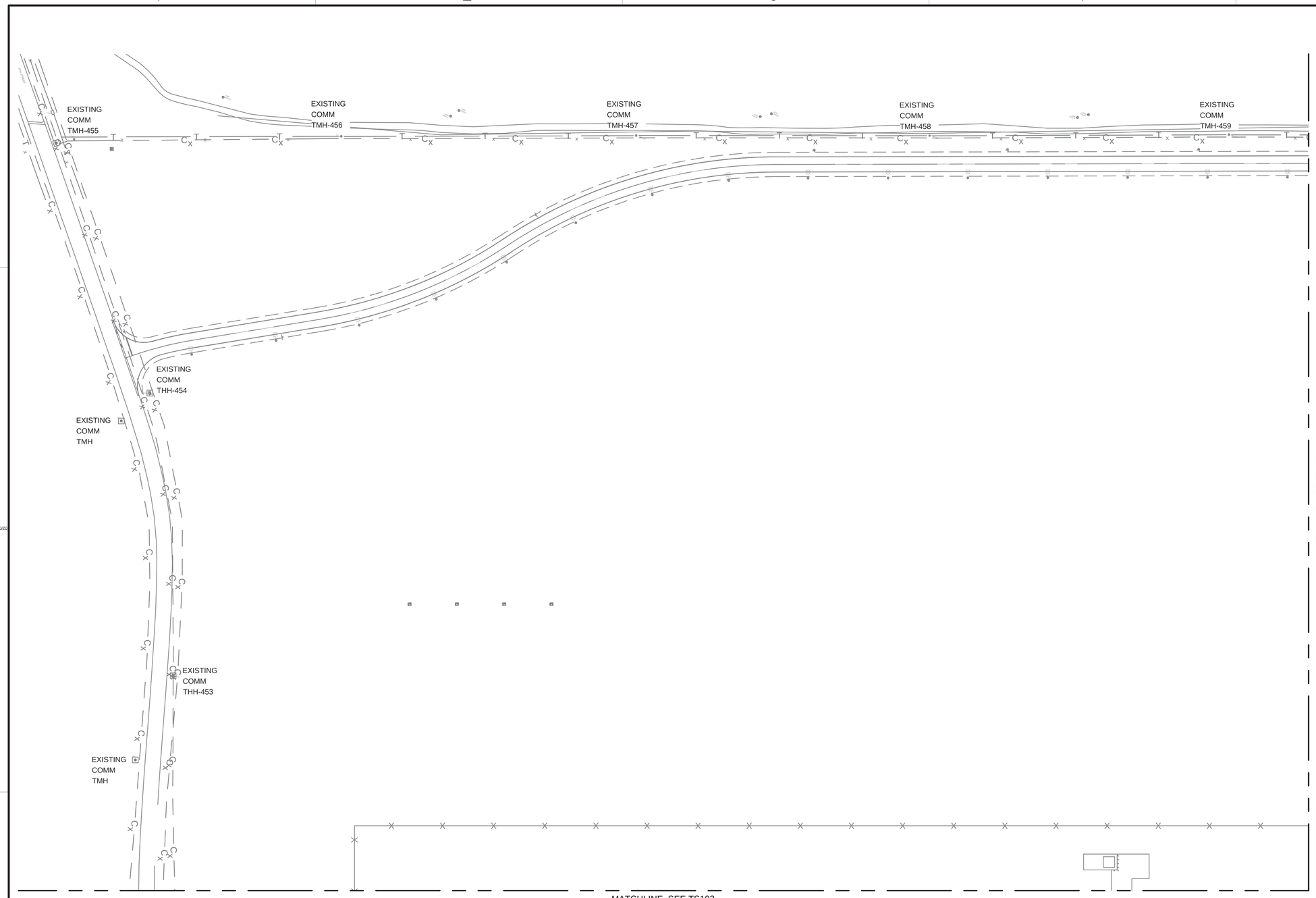

A1 TELECOMMUNICATIONS SITE PLAN 1

SCALE 1" = 80'

GENERAL NOTES - SITE PLANS

A.	THESE DRAWINGS ARE SUPPLEMENTAL TO THE PROJECT SPECIFICATIONS, ARE SCHEMATIC IN NATURE AND MUST NOT BE USED FOR FIELD INSTALLATION. FIELD INSTALLATION MUST BE IN ACCORDANCE WITH APPROVED SHOP DRAWINGS. SEE PROJECT SPECIFICATIONS FOR SHOP DRAWING REQUIREMENTS. THE LAYOUT OF TELECOMMUNICATIONS EQUIPMENT MUST BE FULLY COORDINATED WITH OTHER TRADES AND EQUIPMENT PRIOR TO SUBMISSION OF SHOP DRAWINGS FOR APPROVAL.
B.	SEE SHEET TS001 FOR PROJECT GENERAL NOTES, SYMBOL LEGEND AND ABBREVIATIONS.
C.	COORDINATE MAINTENANCE HOLE PLACEMENT SCHEDULE WITH CONTRACTING OFFICER SUCH THAT PLACEMENT CAN BE WITNESSED BY GOVERNMENT.
D.	COORDINATE DUCTBANK INSPECTION WITH CONTRACTING OFFICER SUCH THAT GOVERNMENT MAY INSPECT PRIOR TO POURING CONCRETE REINFORCEMENT.
E.	LOCATIONS OF MAINTENANCE HOLES AND DUCTBANKS ARE APPROXIMATE. CONFIRM THE LOCATION OF THE MAINTENANCE HOLES AND DUCTBANKS WITH THE CONTRACTING OFFICER. OBTAIN CONTRACTING OFFICER APPROVAL OF MAINTENANCE HOLE LOCATIONS AND ORIENTATION PRIOR TO THE COMMENCEMENT OF WORK.
F.	SEE SHEET TS701 TELECOMMUNICATIONS INTERBUILDING BACKBONE RISER FOR PROJECT CABLING REQUIREMENTS.

REGISTERED COMMUNICATIONS DISTRIBUTION DESIGNER
Bicsi
Tyson Q Banks
BICSI ID # 248575
EXPIRES 12-31-26
RCDD
01/20/2026

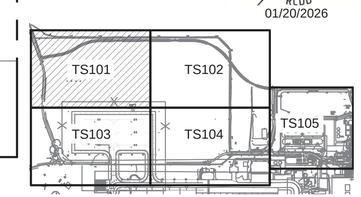

AREA KEY MAP

GRAPHIC SCALE

0 40' 80' 160'

SCALE: 1"=80'

NORTH ARROW

TRUE N

STATE OF MISSOURI
STEVEN D. STRATTON
NUMBER PE-2006024920
PROFESSIONAL ENGINEER
01/20/2026
SEAL

Jacobs / BURNS McDONNELL
JACOBS/B&M, A JOINT VENTURE
1100 NORTH GLEBE ROAD
SUITE 500
ARLINGTON, VA 22201

A/E Contract No. N62742-20-D-0002
A/E Task Order No. N62742215F0315
JCG NO. 0343806/3

A/E INFO

APPROVED
EVAN MIYAZAKI

FOR COMMANDER NAVFAC DATE 02/02/2026

ACTIVITY
AFIMSC APPROVAL PER NAVFAC SAT-TO CHECKLIST

SATISFACTORY TO DATE	31 DEC 2025
DES: TQB DRW: BDP REV: SDS	
PM/OM	KKK
BRANCH MANAGER	SMK
CHIEF ENG/ARCH	SMK
FIRE PROTECTION	RO

DEPARTMENT OF THE NAVY
NAVAL FACILITIES ENGINEERING SYSTEMS COMMAND
NAVFAC PACIFIC
NAVAL FACILITIES ENGINEERING SYSTEMS COMMAND – PACIFIC
JOINT REGION MARIANAS (JRM)
ANDERSEN AIR FORCE BASE
GUAM

FY24 AJUY183012 (P-012)
PDI: NORTH AIRCRAFT PARKING RAMP

TELECOMMUNICATIONS SITE PLAN 1

SCALE:	AS SHOWN
EPROJECTS NO.:	1665555
CONSTR CONTROL NO.	
NAVFAC DRAWING NO.	17361917
SHEET	294 OF 377

TS101

REDESIGN FINAL SUBMITTAL

IF SHEET IS LESS THAN 22" X 34" REDUCED PRINT. USE GRAPHIC SCALES

FILE NAME: Z:\Clients\ANF\USNavy\Poc\133097_GuamP012NAR\Design\Elec\Sheets\P012_1665555_TS101-TS105.dwg
LAYOUT NAME: TS101
PLOTTED: 01/14/2026 9:26am
USER: bdprinkley

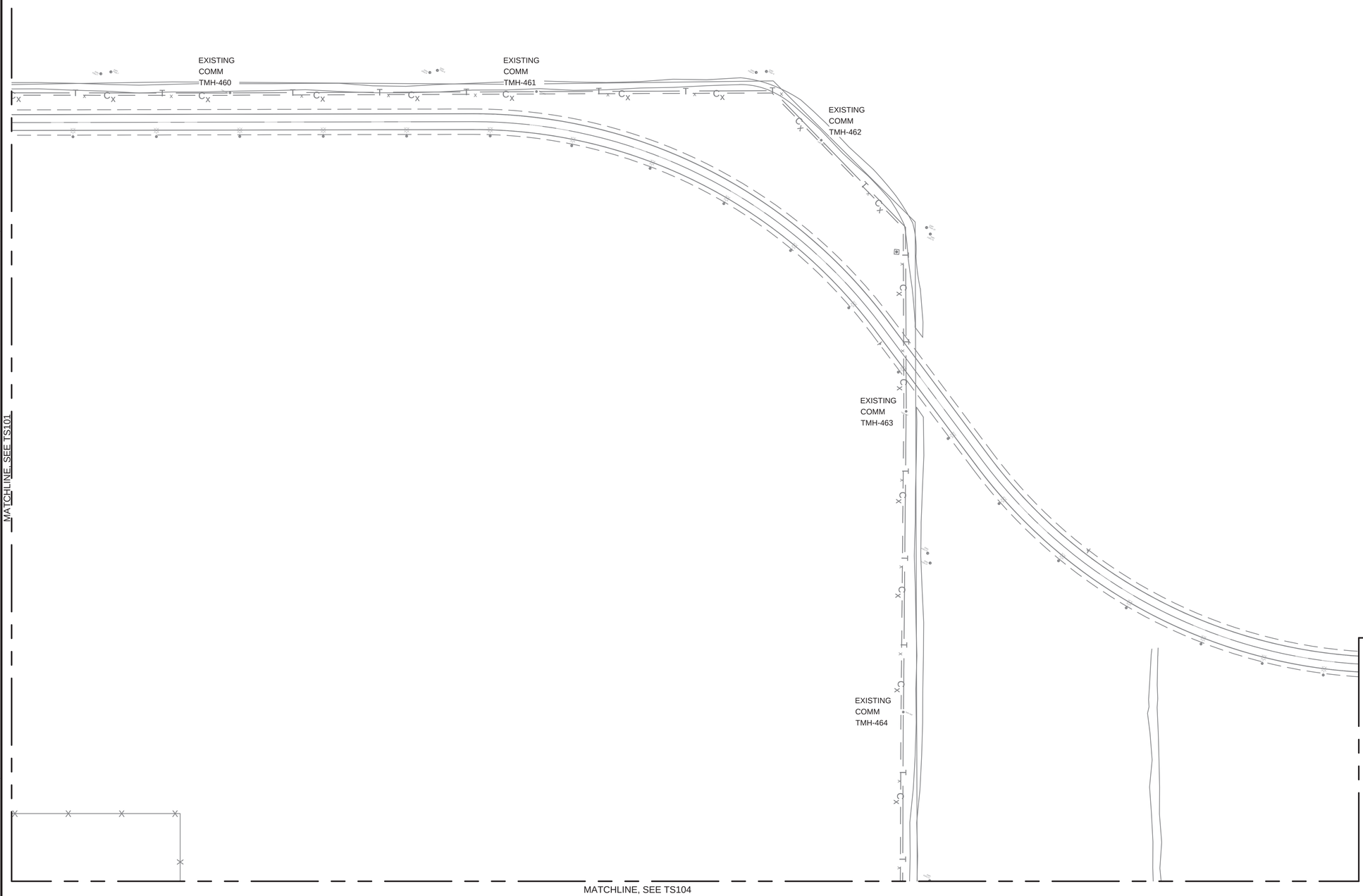

A1 TELECOMMUNICATIONS SITE PLAN 2

SCALE 1" = 80'

GENERAL NOTES - SITE PLANS

A.	THESE DRAWINGS ARE SUPPLEMENTAL TO THE PROJECT SPECIFICATIONS, ARE SCHEMATIC IN NATURE AND MUST NOT BE USED FOR FIELD INSTALLATION. FIELD INSTALLATION MUST BE IN ACCORDANCE WITH APPROVED SHOP DRAWINGS. SEE PROJECT SPECIFICATIONS FOR SHOP DRAWING REQUIREMENTS. THE LAYOUT OF TELECOMMUNICATIONS EQUIPMENT MUST BE FULLY COORDINATED WITH OTHER TRADES AND EQUIPMENT PRIOR TO SUBMISSION OF SHOP DRAWINGS FOR APPROVAL.
B.	SEE SHEET TS001 FOR PROJECT GENERAL NOTES, SYMBOL LEGEND AND ABBREVIATIONS.
C.	COORDINATE MAINTENANCE HOLE PLACEMENT SCHEDULE WITH CONTRACTING OFFICER SUCH THAT PLACEMENT CAN BE WITNESSED BY GOVERNMENT.
D.	COORDINATE DUCTBANK INSPECTION WITH CONTRACTING OFFICER SUCH THAT GOVERNMENT MAY INSPECT PRIOR TO POURING CONCRETE REINFORCEMENT.
E.	LOCATIONS OF MAINTENANCE HOLES AND DUCTBANKS ARE APPROXIMATE. CONFIRM THE LOCATION OF THE MAINTENANCE HOLES AND DUCTBANKS WITH THE CONTRACTING OFFICER. OBTAIN CONTRACTING OFFICER APPROVAL OF MAINTENANCE HOLE LOCATIONS AND ORIENTATION PRIOR TO THE COMMENCEMENT OF WORK.
F.	SEE SHEET TS701 TELECOMMUNICATIONS INTERBUILDING BACKBONE RISER FOR PROJECT CABLING REQUIREMENTS.

REGISTERED COMMUNICATIONS DISTRIBUTION DESIGNER
Bicsi
Tyson Q Banks
BICSI ID # 248575
EXPIRES 12-31-26
RCDD
01/20/2026

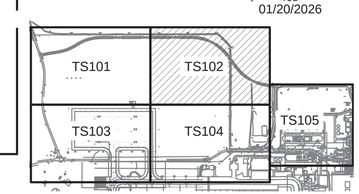

AREA KEY MAP

GRAPHIC SCALE

0 40' 80' 160'

SCALE: 1"=80'

NORTH ARROW

TRUE N

NAVFAC

STATE OF MISSOURI
STEVEN D. STRATTON
NUMBER
PE-2006024920
PROFESSIONAL ENGINEER
01/20/2026
SEAL

Jacobs / BURNS McDONNELL
JACOBS/B&M, A JOINT VENTURE
1100 NORTH GLEBE ROAD
SUITE 500
ARLINGTON, VA 22201

A/E Contract No. N62742-20-D-0002
A/E Task Order No. N6274221F0315
JCG NO. 0343806/3

A/E INFO

APPROVED
Evan Mizpe
FOR COMMANDER NAVFAC DATE 02/02/2026

ACTIVITY
AFIMSC APPROVAL PER NAVFAC SAT-TO CHECKLIST

SATISFACTORY TO DATE	31 DEC 2025
DES: TQB DRW: BDP REV: SDS	
PM/OM	KKK
BRANCH MANAGER	SMK
CHIEF ENG/ARCH	SMK
FIRE PROTECTION	RO

DEPARTMENT OF THE NAVY
NAVAL FACILITIES ENGINEERING SYSTEMS COMMAND
NAVFAC PACIFIC
NAVAL FACILITIES ENGINEERING SYSTEMS COMMAND – PACIFIC
JOINT REGION MARIANAS (JRM)
ANDERSEN AIR FORCE BASE
GUAM

FY24 AJUY183012 (P-012),
PDI: NORTH AIRCRAFT PARKING RAMP

TELECOMMUNICATIONS SITE PLAN 2

SCALE:	AS SHOWN
EPROJECTS NO.:	1665555
CONSTR CONTROL NO.	
NAVFAC DRAWING NO.	17361918
SHEET	295 OF 377

TS102

IF SHEET IS LESS THAN 22" X 34" REDUCED PRINT. USE GRAPHIC SCALES

REDESIGN FINAL SUBMITTAL

FILE NAME: Z:\Clients\ANF\USNavy\Pac\133097_GuamP012NAR\Design\Elec\Sheets\P012_1665555_TS101-TS105.dwg
LAYOUT NAME: TS102
PLOTTED: 01/14/2026 9:27am
USER: bdprinkley

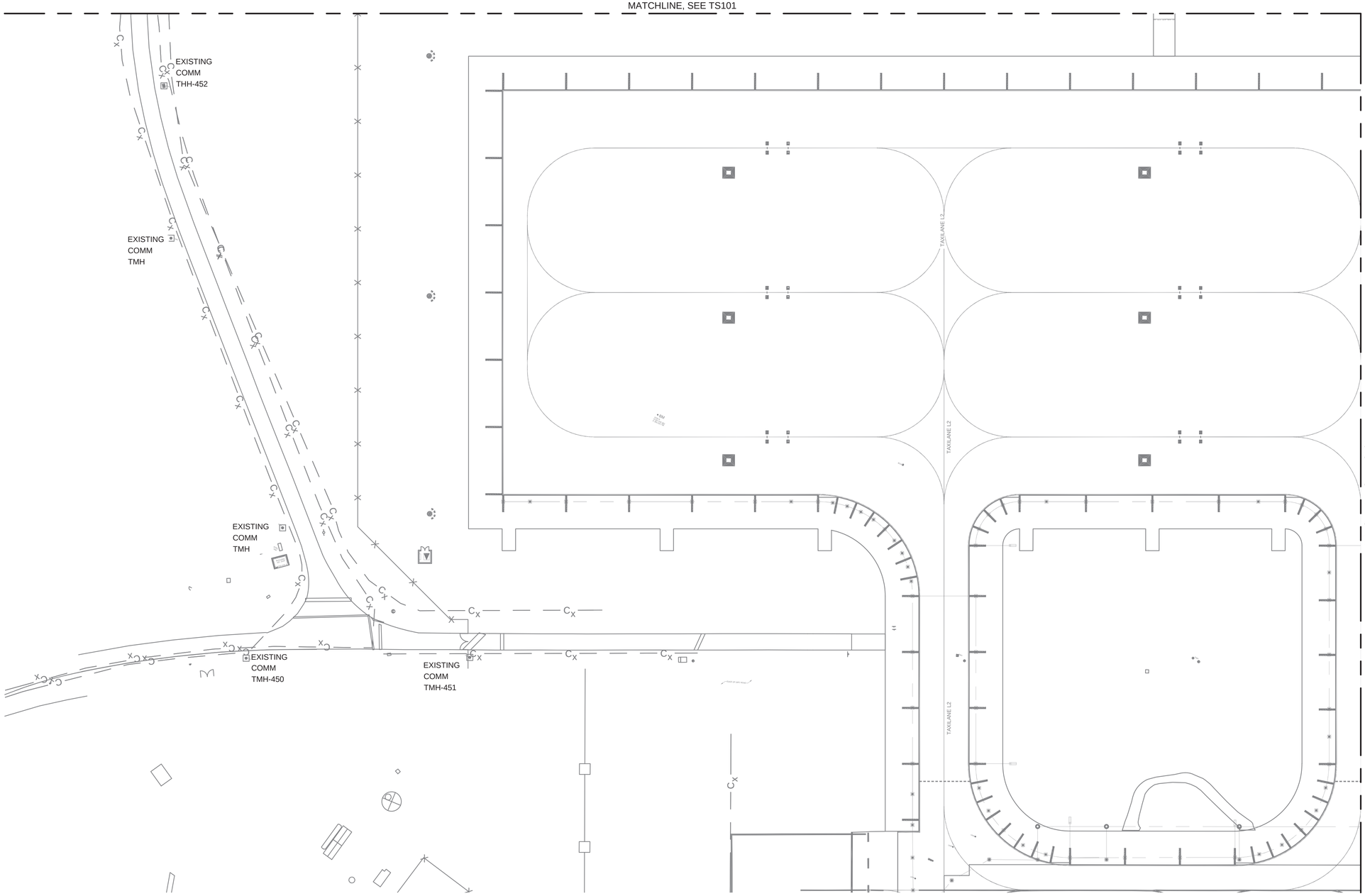

A1 TELECOMMUNICATIONS SITE PLAN 3

SCALE 1" = 80'

GENERAL NOTES - SITE PLANS

A.	THESE DRAWINGS ARE SUPPLEMENTAL TO THE PROJECT SPECIFICATIONS, ARE SCHEMATIC IN NATURE AND MUST NOT BE USED FOR FIELD INSTALLATION. FIELD INSTALLATION MUST BE IN ACCORDANCE WITH APPROVED SHOP DRAWINGS. SEE PROJECT SPECIFICATIONS FOR SHOP DRAWING REQUIREMENTS. THE LAYOUT OF TELECOMMUNICATIONS EQUIPMENT MUST BE FULLY COORDINATED WITH OTHER TRADES AND EQUIPMENT PRIOR TO SUBMISSION OF SHOP DRAWINGS FOR APPROVAL.
B.	SEE SHEET TS001 FOR PROJECT GENERAL NOTES, SYMBOL LEGEND AND ABBREVIATIONS.
C.	COORDINATE MAINTENANCE HOLE PLACEMENT SCHEDULE WITH CONTRACTING OFFICER SUCH THAT PLACEMENT CAN BE WITNESSED BY GOVERNMENT.
D.	COORDINATE DUCTBANK INSPECTION WITH CONTRACTING OFFICER SUCH THAT GOVERNMENT MAY INSPECT PRIOR TO POURING CONCRETE REINFORCEMENT.
E.	LOCATIONS OF MAINTENANCE HOLES AND DUCTBANKS ARE APPROXIMATE. CONFIRM THE LOCATION OF THE MAINTENANCE HOLES AND DUCTBANKS WITH THE CONTRACTING OFFICER. OBTAIN CONTRACTING OFFICER APPROVAL OF MAINTENANCE HOLE LOCATIONS AND ORIENTATION PRIOR TO THE COMMENCEMENT OF WORK.
F.	SEE SHEET TS701 TELECOMMUNICATIONS INTERBUILDING BACKBONE RISER FOR PROJECT CABLING REQUIREMENTS.

REGISTERED COMMUNICATIONS DISTRIBUTION DESIGNER
Bicsi
Tyson Q Banks
BICSI ID # 248575
EXPIRES 12-31-26
RCDD
01/20/2026

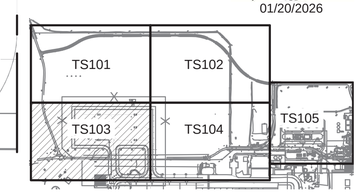

AREA KEY MAP

GRAPHIC SCALE

0 40' 80' 160'

SCALE: 1"=80'

NORTH ARROW

TRUE N

NAVFAC

STATE OF MISSOURI
STEVEN D. STRATTON
NUMBER PE-2006024920
PROFESSIONAL ENGINEER
01/20/2026
SEAL

Jacobs / BURNS McDONNELL
JACOBS/B&M, A JOINT VENTURE
1100 NORTH GLEBE ROAD
SUITE 500
ARLINGTON, VA 22201

A/E Contract No. N62742-20-D-0002
A/E Task Order No. N6274221F0315
JCG NO. 0343/0003

A/E INFO

APPROVED
EVAN MILLER

FOR COMMANDER NAVFAC DATE 02/02/2026

ACTIVITY
AFIMSC APPROVAL PER NAVFAC SAT-TO CHECKLIST

SATISFACTORY TO DATE 31 DEC 2025

DES: TQB	DRW: BDP	REV: SDS	
PM/DM	KKK		
BRANCH MANAGER	SMK		
CHIEF ENG/ARCH	SMK		
FIRE PROTECTION	RO		

DEPARTMENT OF THE NAVY
NAVFAC PACIFIC
NAVAL FACILITIES ENGINEERING SYSTEMS COMMAND
NAVAL FACILITIES ENGINEERING SYSTEMS COMMAND – PACIFIC
JOINT REGION MARIANAS (JRM)
ANDERSEN AIR FORCE BASE
GUAM

FY24 AJUY183012 (P-012),
PDI: NORTH AIRCRAFT PARKING RAMP

TELECOMMUNICATIONS SITE PLAN 3

SCALE: AS SHOWN
EPROJECTS NO.: 1665555
CONSTR CONTROL NO.
NAVFAC DRAWING NO. 17361919
SHEET 296 OF 377

TS103

REDESIGN FINAL SUBMITTAL

IF SHEET IS LESS THAN 22" X 34" REDUCED PRINT. USE GRAPHIC SCALES

FILE NAME: Z:\Clients\ANF\USNavy\Pac\133097_GuamP012NAF\Design\Elec\Sheets\P012_1665555_TS101-TS105.dwg
LAYOUT NAME: TS103
PLOTTED: 01/14/2026 9:27am
USER: bspinkley

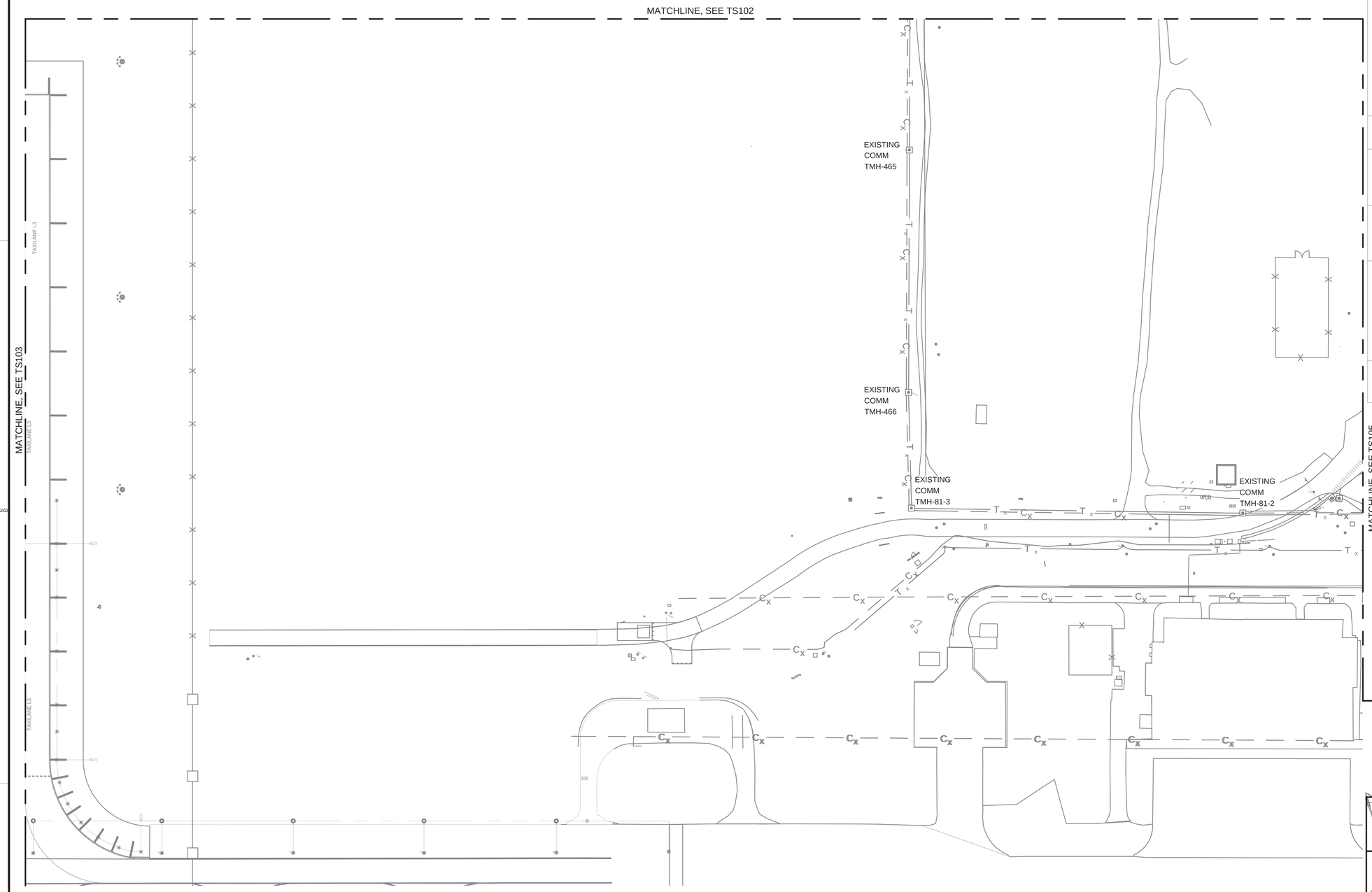

A1 TELECOMMUNICATIONS SITE PLAN 4

SCALE 1" = 80'

GENERAL NOTES - SITE PLANS

A.	THESE DRAWINGS ARE SUPPLEMENTAL TO THE PROJECT SPECIFICATIONS, ARE SCHEMATIC IN NATURE AND MUST NOT BE USED FOR FIELD INSTALLATION. FIELD INSTALLATION MUST BE IN ACCORDANCE WITH APPROVED SHOP DRAWINGS. SEE PROJECT SPECIFICATIONS FOR SHOP DRAWING REQUIREMENTS. THE LAYOUT OF TELECOMMUNICATIONS EQUIPMENT MUST BE FULLY COORDINATED WITH OTHER TRADES AND EQUIPMENT PRIOR TO SUBMISSION OF SHOP DRAWINGS FOR APPROVAL.
B.	SEE SHEET TS001 FOR PROJECT GENERAL NOTES, SYMBOL LEGEND AND ABBREVIATIONS.
C.	COORDINATE MAINTENANCE HOLE PLACEMENT SCHEDULE WITH CONTRACTING OFFICER SUCH THAT PLACEMENT CAN BE WITNESSED BY GOVERNMENT.
D.	COORDINATE DUCTBANK INSPECTION WITH CONTRACTING OFFICER SUCH THAT GOVERNMENT MAY INSPECT PRIOR TO POURING CONCRETE REINFORCEMENT.
E.	LOCATIONS OF MAINTENANCE HOLES AND DUCTBANKS ARE APPROXIMATE. CONFIRM THE LOCATION OF THE MAINTENANCE HOLES AND DUCTBANKS WITH THE CONTRACTING OFFICER. OBTAIN CONTRACTING OFFICER APPROVAL OF MAINTENANCE HOLE LOCATIONS AND ORIENTATION PRIOR TO THE COMMENCEMENT OF WORK.
F.	SEE SHEET TS701 TELECOMMUNICATIONS INTERBUILDING BACKBONE RISER FOR PROJECT CABLING REQUIREMENTS.

STATE OF MISSOURI
STEVEN D. STRATTON
NUMBER PE-2006024920
PROFESSIONAL ENGINEER
01/20/2026
SEAL

Jacobs / BURNS McDONNELL
JACOBS/B&M, A JOINT VENTURE
1100 NORTH GLEBE ROAD
SUITE 500
ARLINGTON, VA 22201

A/E Contract No. N62742-20-D-0002
A/E Task Order No. N6274221F0315
JCG NO. 234326003
A/E INFO

APPROVED
FOR COMMANDER NAVFAC DATE 02/02/2026

ACTIVITY
AFIMSC APPROVAL PER NAVFAC SAT-TO CHECKLIST

SATISFACTORY TO DATE 31 DEC 2025

DES: TQB	DRW: BDP	REV: SDS	
PM/DM		KKK	
BRANCH MANAGER		SMK	
CHIEF ENG/ARCH		SMK	
FIRE PROTECTION		RO	

REGISTERED COMMUNICATIONS DISTRIBUTION DESIGNER
Bicsi
Tyson Q Banks
BICSI ID # 248575
EXPIRES 12-31-26
RCDD
01/20/2026

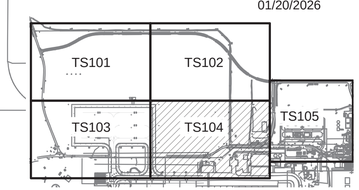

AREA KEY MAP

DEPARTMENT OF THE NAVY
NAVFAC PACIFIC
ANDERSEN AIR FORCE BASE
NAVAL FACILITIES ENGINEERING SYSTEMS COMMAND
NAVAL FACILITIES ENGINEERING SYSTEMS COMMAND – PACIFIC
JOINT REGION MARIANAS (JRM)
GUAM

FY24 AJJY183012 (P-012),
PDI: NORTH AIRCRAFT PARKING RAMP

TELECOMMUNICATIONS SITE PLAN 4

SCALE: AS SHOWN
EPROJECTS NO.: 1665555
CONSTR CONTROL NO.
NAVFAC DRAWING NO. 17361920
SHEET 297 OF 377

TS104

GRAPHIC SCALE
0 40' 80' 160'
SCALE: 1"=80'

NORTH ARROW
TRUE N

IF SHEET IS LESS THAN 22" X 34" REDUCED PRINT. USE GRAPHIC SCALES

REDESIGN FINAL SUBMITTAL

FILE NAME: Z:\Clients\ANF\USNavy\Poc\133097_GuamP012NAR\Design\Elec\Sheets\P012_1665555_TS101-TS105.dwg
LAYOUT NAME: TS104
PLOTTED: 01/14/2026 9:27am
USER: bdpinkley

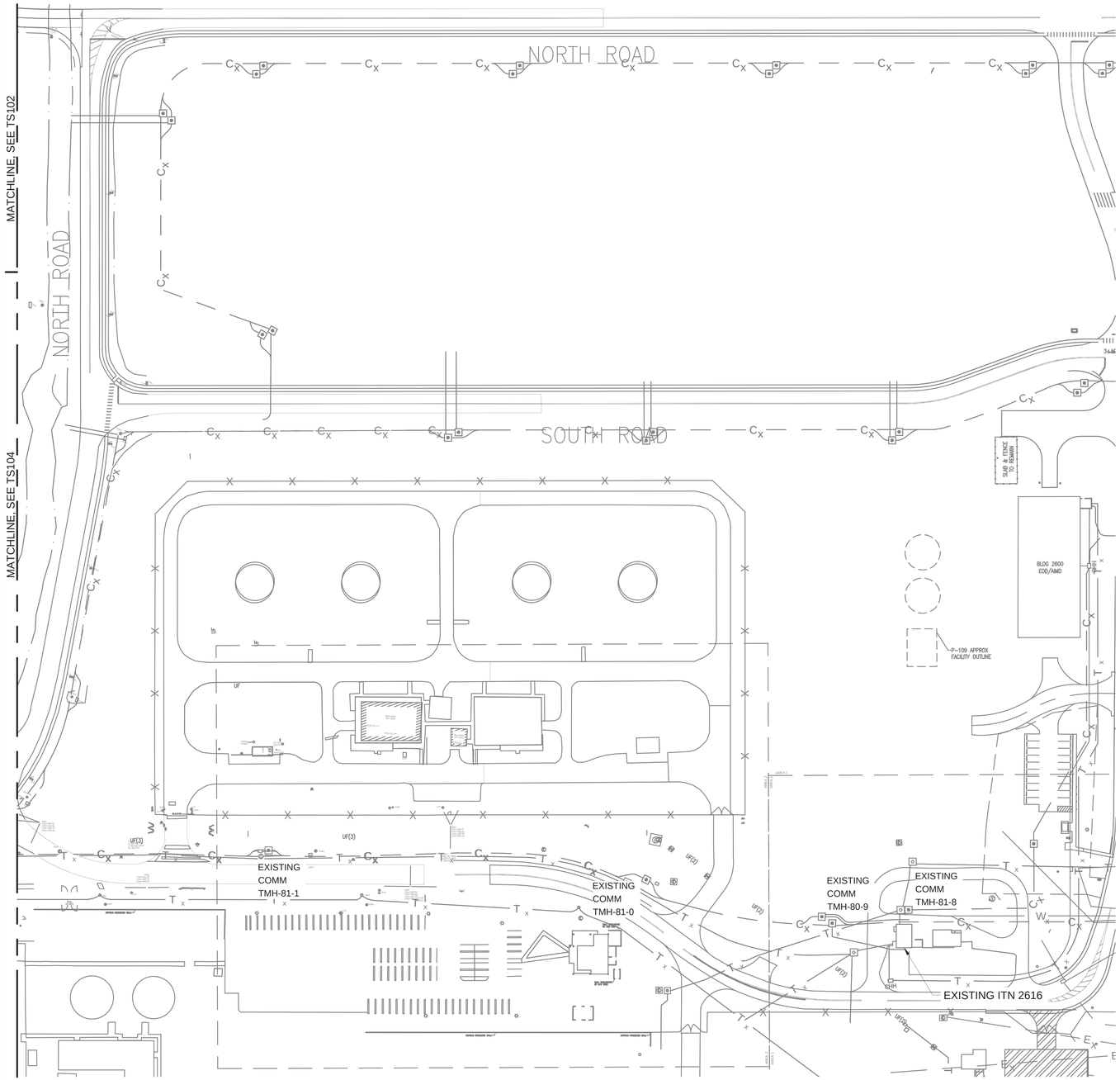

A1 TELECOMMUNICATIONS SITE PLAN 5

SCALE 1" = 80'

GENERAL NOTES - SITE PLANS

A.	THESE DRAWINGS ARE SUPPLEMENTAL TO THE PROJECT SPECIFICATIONS, ARE SCHEMATIC IN NATURE AND MUST NOT BE USED FOR FIELD INSTALLATION. FIELD INSTALLATION MUST BE IN ACCORDANCE WITH APPROVED SHOP DRAWINGS. SEE PROJECT SPECIFICATIONS FOR SHOP DRAWING REQUIREMENTS. THE LAYOUT OF TELECOMMUNICATIONS EQUIPMENT MUST BE FULLY COORDINATED WITH OTHER TRADES AND EQUIPMENT PRIOR TO SUBMISSION OF SHOP DRAWINGS FOR APPROVAL.
B.	SEE SHEET TS001 FOR PROJECT GENERAL NOTES, SYMBOL LEGEND AND ABBREVIATIONS.
C.	COORDINATE MAINTENANCE HOLE PLACEMENT SCHEDULE WITH CONTRACTING OFFICER SUCH THAT PLACEMENT CAN BE WITNESSED BY GOVERNMENT.
D.	COORDINATE DUCTBANK INSPECTION WITH CONTRACTING OFFICER SUCH THAT GOVERNMENT MAY INSPECT PRIOR TO POURING CONCRETE REINFORCEMENT.
E.	LOCATIONS OF MAINTENANCE HOLES AND DUCTBANKS ARE APPROXIMATE. CONFIRM THE LOCATION OF THE MAINTENANCE HOLES AND DUCTBANKS WITH THE CONTRACTING OFFICER. OBTAIN CONTRACTING OFFICER APPROVAL OF MAINTENANCE HOLE LOCATIONS AND ORIENTATION PRIOR TO THE COMMENCEMENT OF WORK.
F.	SEE SHEET TS701 TELECOMMUNICATIONS INTERBUILDING BACKBONE RISER FOR PROJECT CABLING REQUIREMENTS.

NAVFAC

STATE OF MISSOURI
STEVEN D. STRATTON
NUMBER PE-2006024920
PROFESSIONAL ENGINEER
01/20/2026
SEAL

Jacobs / BURNS McDONNELL
JACOBS/B&M, A JOINT VENTURE
1100 NORTH GLEBE ROAD
SUITE 500
ARLINGTON, VA 22201

A/E Contract No. N62742-20-D-0002
A/E Task Order No. N6274221F0315
JCG NO. 1334380003
A/E INFO

APPROVED
FOR COMMANDER NAVFAC DATE 02/02/2026

ACTIVITY
AFIMSC APPROVAL PER NAVFAC SAT-TO CHECKLIST

SATISFACTORY TO DATE	31 DEC 2025
DES: TQB	DRW: BDP	REV: SDS
PM/DM	KKK
BRANCH MANAGER	SMK
CHIEF ENG/ARCH	SMK
FIRE PROTECTION	RO

REGISTERED COMMUNICATIONS DISTRIBUTION DESIGNER
Bicsi
Tyson Q Banks
BICSI ID # 248575
EXPIRES 12 31 26
RCDD
01/20/2026

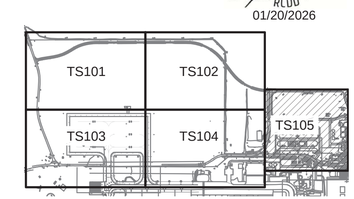

AREA KEY MAP

DEPARTMENT OF THE NAVY
NAVFAC PACIFIC
NAVAL FACILITIES ENGINEERING SYSTEMS COMMAND
NAVAL FACILITIES ENGINEERING SYSTEMS COMMAND – PACIFIC
JOINT REGION MARIANAS (JRM)
ANDERSEN AIR FORCE BASE
GUAM

FY24 AJJY183012 (P-012),
PDI: NORTH AIRCRAFT PARKING RAMP

TELECOMMUNICATIONS SITE PLAN 5

SCALE: AS SHOWN
EPROJECTS NO.: 1665555
CONSTR CONTROL NO.
NAVFAC DRAWING NO. 17361921
SHEET 298 OF 377

TS105

GRAPHIC SCALE
0 40' 80' 160'
SCALE: 1"=80'

NORTH ARROW
TRUE N

IF SHEET IS LESS THAN 22" X 34" REDUCED PRINT. USE GRAPHIC SCALES

REDESIGN FINAL SUBMITTAL

FILE NAME: Z:\Clients\ANF\USNavy\Poc\133097_GuamP012NAR\Design\Elec\Sheets\P012_1665555_TS101-TS105.dwg
LAYOUT NAME: TS105
PLOTTED: 01/14/2026 9:27am
USER: Edgin.Kay

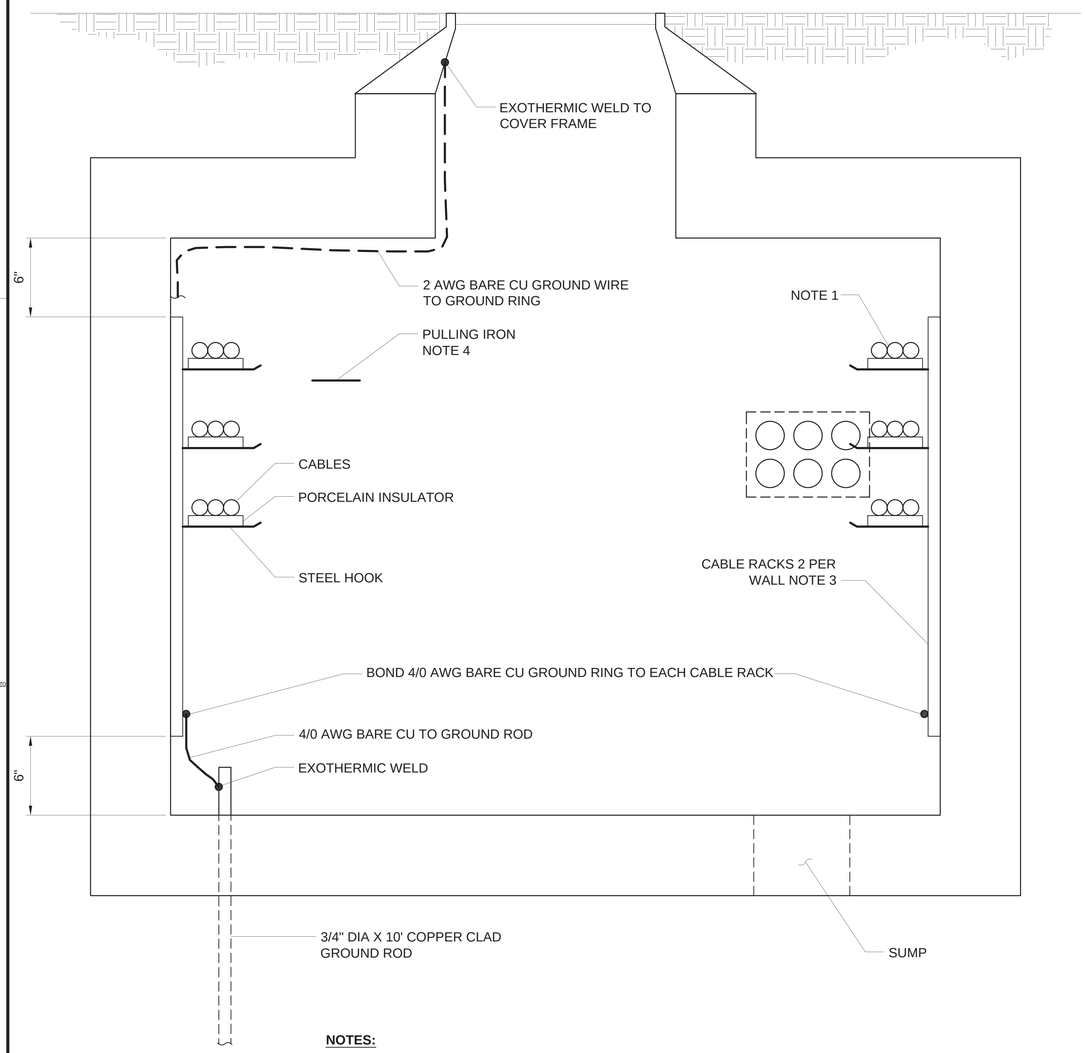

NOTES:

1. AT CABLE SPLICES ENCLOSURES, CONNECT SHIELDS TO GROUND RING W/ 6 AWG BARE CU.
2. LOCATE CABLE RACKS 30" FROM ADJACENT WALL, EXCEPT VARY TO AVOID DUCT BANK ENTRANCE.
3. METALLIC EQUIPMENT MUST BE BONDED TO GROUND SO THEY ARE AT THE SAME POTENTIAL.

A1 COMMUNICATIONS MANHOLE EQUIPMENT DETAIL

SCALE: NTS

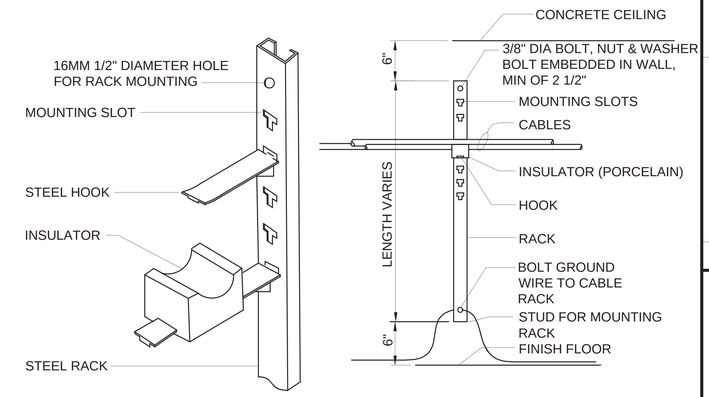

NOTES:

1. STEEL PARTS MUST BE HOT DIPPED GALVANIZED AFTER FABRICATION.
2. PROVIDE MINIMUM OF 2 CABLE RACKS PER RACKING WALL OF EACH MANHOLE. PROVIDE ADDITIONAL RACKS IN EXISTING MANHOLES & HANDHOLES TO RERACK CABLES AS REQUIRED.

C4 CABLE RACK

SCALE: NTS

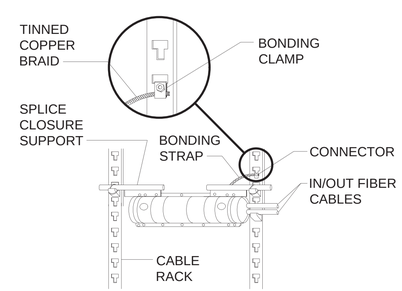

A3 MANHOLE/HAND HOLE RACKING DETAIL

SCALE: NTS

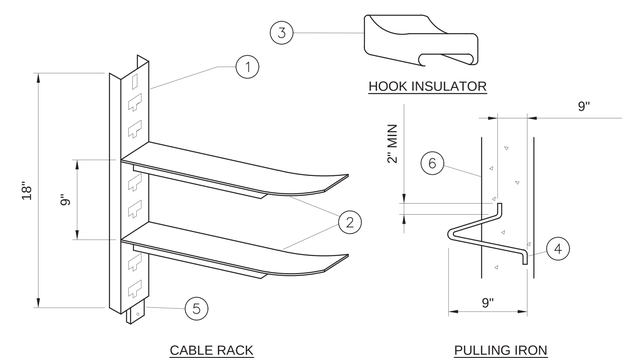

ITEM	BILL OF MATERIALS
1	CABLE RACK HOT DIP GALVANIZED
2	INSULATOR WELDED SUPPORT
3	HOOK INSULATOR
4	PULLING IRON 1" DIA GALVANIZED
5	SLOT FOR 1/2" BOLT AND LEAD ANCHOR
6	THICK CONCRETE WALL AT 3000 PSI

NOTES:

1. PULLING IRON LOCATION IS ALWAYS OPPOSITE TO CONDUIT ENTRANCE.
2. PENETRATION POINT DESIGNATIONS ARE BASED ON THE MANHOLE LOCATION AS SHOWN ON THE CONSTRUCTION DRAWINGS. SUBMIT SHOP DRAWINGS FOR EACH MANHOLE FOR APPROVAL PRIOR TO FABRICATION.

A4 CABLE RACK, INSULATOR, PULLING IRON DETAILS

SCALE: NTS

REGISTERED COMMUNICATIONS DISTRIBUTION DESIGNER
Bicsi
Tyson Q Banks
BICSI ID # 248575
EXPIRES 12-31-26
RCDD
01/20/2026

NAVFAC

STATE OF MISSOURI
STEVEN D. STRATTON
NUMBER PE-2006024920
PROFESSIONAL ENGINEER
01/20/2026
SEAL

Jacobs / BURNS McDONNELL
JACOBS/B&M, A JOINT VENTURE
1100 NORTH GLEBE ROAD
SUITE 500
ARLINGTON, VA 22201

A/E Contract No. N62742-20-D-0002
A/E Task Order No. N62742-21F0315
JCG NO. D343003
A/E INFO

APPROVED
FOR COMMANDER NAVFAC DATE 02/02/2026

ACTIVITY
AFIMSC APPROVAL PER NAVFAC SAT-TO CHECKLIST

SATISFACTORY TO DATE 31 DEC 2025

DES: TQB DRW: BDP REV: SDS
PM/DM KKK
BRANCH MANAGER SMK
CHIEF ENG/ARCH SMK
FIRE PROTECTION RO

DEPARTMENT OF THE NAVY
NAVAL FACILITIES ENGINEERING SYSTEMS COMMAND
NAVFAC PACIFIC
NAVAL FACILITIES ENGINEERING SYSTEMS COMMAND ~ PACIFIC
JOINT REGION MARIANAS (JRM)
ANDERSEN AIR FORCE BASE
GUAM
FY24 AJJY183012 (P-012),
PDI: NORTH AIRCRAFT PARKING RAMP
TELECOMMUNICATIONS SITE DETAILS

SCALE: AS SHOWN
EPROJECTS NO.: 1665555
CONSTR CONTROL NO.
NAVFAC DRAWING NO. 17361922
SHEET 299 OF 377
TS501

REDESIGN FINAL SUBMITTAL

FILE NAME: Z:\Clients\ANF\USNavy\Pac\133097_GuamP012NAR\Design\Elec\Sheets\TS501-504.dwg
LAYOUT NAME: TS501
PLOTTED: 01/14/2026 9:28am
USER: spinkley

IF SHEET IS LESS THAN 22" X 34" REDUCED PRINT. USE GRAPHIC SCALES

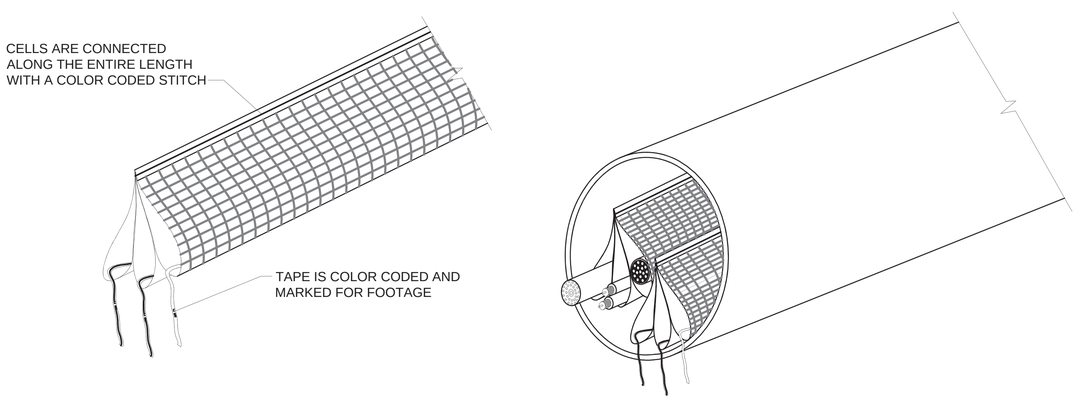

INNERDUCT

3 CELL WITH 3-3" FLEXIBLE CABLEWAYS.
MAX CABLE DIAMETER PER CELL IS 25MM.

INSTALLATION OF CABLE

TRIPLE PACK
INSTALL

A2 INNERDUCT DETAIL

SCALE: NTS

REGISTERED COMMUNICATIONS DISTRIBUTION DESIGNER
Bicsi
Tyson Q Banks
BICSI ID # 248575
EXPIRES 12-31-26
RCDD
01/20/2026

NAVFAC

STATE OF MISSOURI
STEVEN D. STRATTON
NUMBER
PE-2006024920
PROFESSIONAL ENGINEER
01/20/2026
SEAL

Jacobs / BURNS McDONNELL

JACOBS/B&M, A JOINT VENTURE
1100 NORTH GLEBE ROAD
SUITE 500
ARLINGTON, VA 22201

A/E Contract No. N62742-20-D-0002
A/E Task Order No. N62742211F0315
JCG NO. 2343663

A/E INFO

APPROVED
EVAN MIGER

FOR COMMANDER NAVFAC DATE 02/02/2026

ACTIVITY
AFIMSC APPROVAL PER NAVFAC
SAT-TO CHECKLIST

SATISFACTORY TO DATE	31 DEC 2025
DES: TQB DRW: BDP REV: SDS	
PM/OM	KKK
BRANCH MANAGER	SMK
CHIEF ENG/ARCH	SMK
FIRE PROTECTION	RO

DEPARTMENT OF THE NAVY
NAVFAC PACIFIC
ANDERSEN AIR FORCE BASE
GUAM

NAVAL FACILITIES ENGINEERING SYSTEMS COMMAND
NAVAL FACILITIES ENGINEERING SYSTEMS COMMAND ~ PACIFIC
JOINT REGION MARIANAS (JRM)

FY24 AJJY183012 (P-012),
PDI: NORTH AIRCRAFT PARKING RAMP

TELECOMMUNICATIONS SITE DETAILS

SCALE:	AS SHOWN
EPROJECTS NO.:	1665555
CONSTR CONTROL NO.	
NAVFAC DRAWING NO.	17361923
SHEET	300 OF 377

TS502

REDESIGN FINAL SUBMITTAL

IF SHEET IS LESS THAN 22" X 34"
REDUCED PRINT. USE GRAPHIC SCALES

FILE NAME: Z:\Clients\ANF\USNavy\Poc\133097_GuamP012NAR\Design\Elec\Sheets\TS501-504.dwg
LAYOUT NAME: TS502
PLOTTED: 01/14/2026 9:28am
USER: bsprinkley

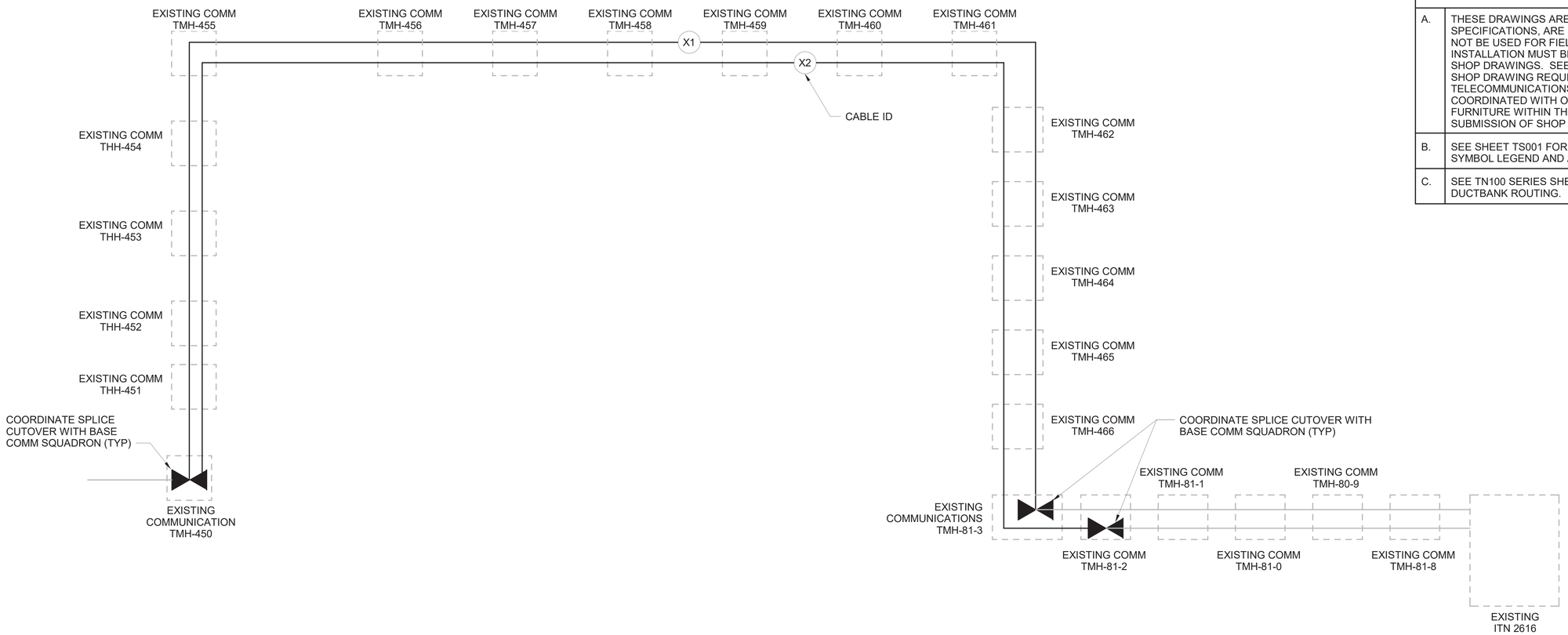

GENERAL NOTES:

A.	THESE DRAWINGS ARE SUPPLEMENTAL TO THE PROJECT SPECIFICATIONS, ARE SCHEMATIC IN NATURE AND MUST NOT BE USED FOR FIELD INSTALLATION. FIELD INSTALLATION MUST BE IN ACCORDANCE WITH APPROVED SHOP DRAWINGS. SEE PROJECT SPECIFICATIONS FOR SHOP DRAWING REQUIREMENTS. THE LAYOUT OF TELECOMMUNICATIONS EQUIPMENT MUST BE FULLY COORDINATED WITH OTHER TRADES, EQUIPMENT AND FURNITURE WITHIN THE ROOM AND SPACE PRIOR TO SUBMISSION OF SHOP DRAWINGS FOR APPROVAL.
B.	SEE SHEET TS001 FOR PROJECT GENERAL NOTES, SYMBOL LEGEND AND ABBREVIATIONS.
C.	SEE TN100 SERIES SHEETS FOR TELECOMMUNICATION DUCTBANK ROUTING.

B1 TELECOMMUNICATIONS INTERBUILDING BACKBONE RISER DIAGRAM

SCALE: NTS

COMMUNICATIONS BACKBONE CABLE SCHEDULE

CABLE			FROM	TO	
ID	QUANTITY	TYPE	ROOM	ROOM	DESCRIPTION
X1	2-12 STRAND 3-72 STRAND 288 STRAND 300 PAIR 1-144 STRAND	OS1 OSP SINGLE-MODE FIBER OS1 OSP SINGLE-MODE FIBER OS1 OSP SINGLE-MODE FIBER PE-89 OSP COPPER OS1 OSP SINGLE-MODE FIBER	EXISTING TMH-450	EXISTING TMH-81-3	THIS WORK MUST BE PERFORMED BEFORE EXISTING COMMUNICATION INFRASTRUCTURE CAN BE DEMOLISHED. COORDINATE CUTOVER WITH COMMUNICATION SQUADRON. PROVIDE (1) 3" 3-CELL FABRIC MESH INNERDUCT IN EXISTING PATHWAYS WHERE NEW CABLING WILL BE INSTALLED
X2	1-144 STRAND	OS1 OSP SINGLE-MODE FIBER	EXISTING TMH-450	EXISTING TMH-81-2	THIS WORK MUST BE PERFORMED BEFORE EXISTING COMMUNICATION INFRASTRUCTURE CAN BE DEMOLISHED. COORDINATE CUTOVER WITH COMMUNICATION SQUADRON. PROVIDE (1) 3" 3-CELL FABRIC MESH INNERDUCT IN EXISTING PATHWAYS WHERE NEW CABLING WILL BE INSTALLED

SYM	DESCRIPTION	DATE

NAVFAC

STATE OF MISSOURI
STEVEN D. STRATTON
NUMBER
PE-2006024920
PROFESSIONAL ENGINEER
01/20/2026
SEAL

Jacobs / BURNS McDONNELL
JACOBS/B&M, A JOINT VENTURE
1100 NORTH GLEBE ROAD
SUITE 500
ARLINGTON, VA 22201
A/E Contract No. N62470-20-D-0002
A/E Task Order No. N62470FE015
JCG NO. 334/3003
A/E INFO

APPROVED
FOR COMMANDER NAVFAC DATE 02/02/2026

ACTIVITY
AFIMSC APPROVAL PER NAVFAC SAT-TO CHECKLIST

SATISFACTORY TO DATE 31 DEC 2025

DES: TQB	DRW: BDP REV: SDS
PM/DM	KKK
BRANCH MANAGER	SMK
CHIEF ENG/ARCH	SMK
FIRE PROTECTION	RO

DEPARTMENT OF THE NAVY
NAVAL FACILITIES ENGINEERING SYSTEMS COMMAND
NAVAL FACILITIES ENGINEERING SYSTEMS COMMAND ~ PACIFIC
JOINT REGION MARIANAS (JRM)
NAVFAC PACIFIC
ANDERSEN AIR FORCE BASE
GUAM

FY24 AJJY183012 (P-012),
PDI: NORTH AIRCRAFT PARKING RAMP

TELECOMMUNICATIONS INTERBUILDING BACKBONE RISER

SCALE: AS SHOWN
EPROJECTS NO.: 1665555
CONSTR CONTROL NO.
NAVFAC DRAWING NO. 17361924
SHEET 301 OF 377

TS701

REDESIGN FINAL SUBMITTAL

REGISTERED COMMUNICATIONS DISTRIBUTION DESIGNER
Bicsi
Tyson Q Banks
BICSI ID # 248575
EXPIRES 12-31-26
RCDD
01/20/2026

IF SHEET IS LESS THAN 22" X 34"
REDUCED PRINT. USE GRAPHIC SCALES

FILE NAME: C:\Users\tbanks\OneDrive - Burns & McDonnell\Documents\133097_E_Central_tbanks@burnsmcd.com.rvt
LAYOUT NAME: TELECOMMUNICATIONS INTERBUILDING BACKBONE RISER
PLOTTED: 1/20/2026 5:30:28 PM
USER: BDP

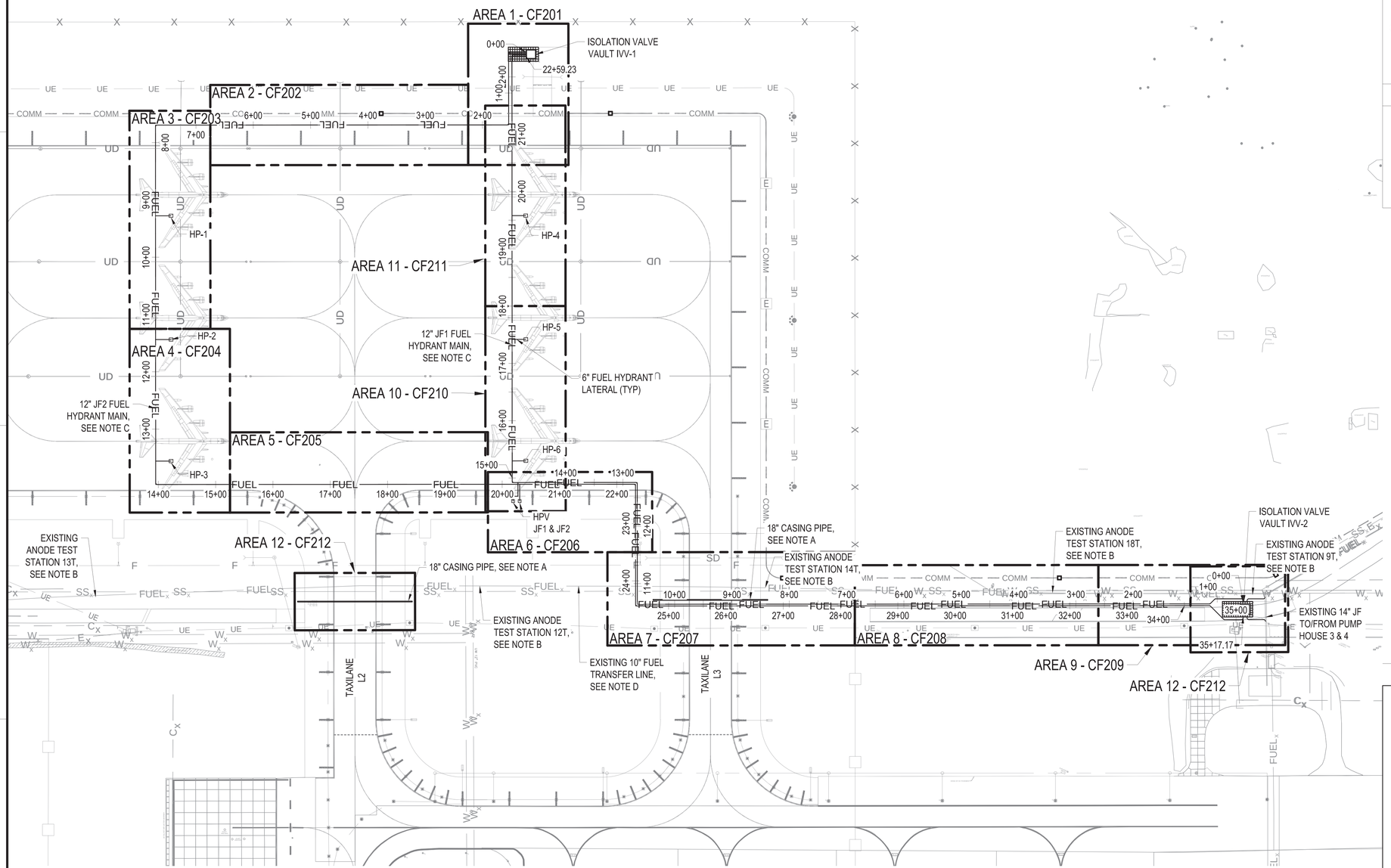

A1 OVERALL FUELING PLAN

SCALE: 1" = 100'

GENERAL NOTES

A PROVIDE TWO 200 LF SECTIONS (ONE AT EACH CROSSING) OF 18" DIAMETER STND WT STEEL CASING PIPE FOR FUTURE INSTALLATION OF 12" FUEL TRANSFER LINE UNDER TAXILANES. COORDINATE WITH CONTRACTING OFFICER REGARDING FUTURE TRANSFER LINES DESIGN PRIOR TO INSTALLATION OF CASING PIPES. SEE DETAIL A1 ON CF501.

B EXISTING CATHODIC PROTECTION ANODE TEST STATIONS WITHIN LIMITS OF GRADING, AT APPROX. 460-FOOT INTERVALS ALONG EXISTING 10" FUEL TRANSFER LINE, MUST BE RELOCATED OR RAISED TO FINISHED GRADE AS INDICATED ON FUEL PLAN AND PROFILE SHEETS. LOCATIONS SHOWN BASED ON PIPELINE AS-BUILT INFORMATION. SEE DETAILS ON CATHODIC PROTECTION DRAWING EK502.

C PROVIDE FUEL PIPE MARKERS IN ACCORDANCE WITH DETAIL C1 ON CF501.

D EXISTING 10" TRANSFER LINE LOCATION BASED ON POTHOLING DATA COLLECTED BY UNITEK ENVIRONMENTAL GUAM FROM FEBRUARY 6TH TO FEBRUARY 23RD, 2024.

LEGEND

F	FIRE WATER
UE	UNDERGROUND ELECTRICAL
SD	STORM DRAIN
FUEL	FUEL LINE
COMM	EPDS DUCTBANK

KEY PLAN

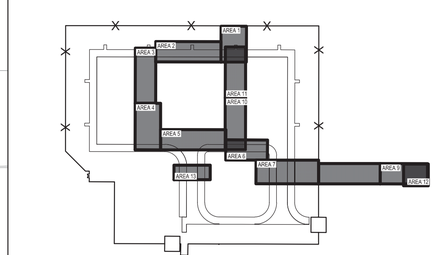

GRAPHIC SCALE

0 50' 100' 200'

SCALE: 1"=100'

NORTH ARROW

TRUE N

NAVFAC

STATE OF TEXAS
WILLIAM BATTEY
151640
PROFESSIONAL ENGINEER
01/20/2026
SEAL

Jacobs / BURNS McDONNELL
JACOBS/B&M, A JOINT VENTURE
1100 NORTH GLEBE ROAD
SUITE 500
ARLINGTON, VA 22201

A/E Contract No. N62742-20-D-0002
A/E Task Order No. N6274221F0315
JCG NO. 0343/0603
A/E INFO

APPROVED
Eva Mize
FOR COMMANDER NAVFAC DATE 02/02/2026

ACTIVITY
AFIMSC APPROVAL PER NAVFAC SAT-TO CHECKLIST

SATISFACTORY TO DATE 31 DEC 2025

DES:	WBB	DRW:	CDS	REV:	MSL
PM/DM					KKK
BRANCH MANAGER					SMK
CHIEF ENG/ARCH					SMK
FIRE PROTECTION					RO

DEPARTMENT OF THE NAVY
NAVAL FACILITIES ENGINEERING SYSTEMS COMMAND
NAVFAC PACIFIC
ANDERSEN AIR FORCE BASE

NAVAL FACILITIES ENGINEERING SYSTEMS COMMAND – PACIFIC
JOINT REGION MARIANAS (JRM)
GUAM

FY24 AUJY183012 (P-012),
PDI: NORTH AIRCRAFT PARKING RAMP

OVERALL FUELING PLAN

SCALE: AS SHOWN
EPROJECTS NO.: 1665555
CONSTR CONTROL NO.
NAVFAC DRAWING NO. 17361925
SHEET 302 OF 377

CF101

REDESIGN FINAL SUBMITTAL

IF SHEET IS LESS THAN 22" X 34" REDUCED PRINT. USE GRAPHIC SCALES

FILE NAME: Z:\Clients\ANF\USNavy\Poc\133097_GuamP012NAR\Design\Civil\Sheets\P012_133097CF101.dwg
LAYOUT NAME: CF101
PLOTTED: 01/14/2026 2:24pm
USER: cdsouba

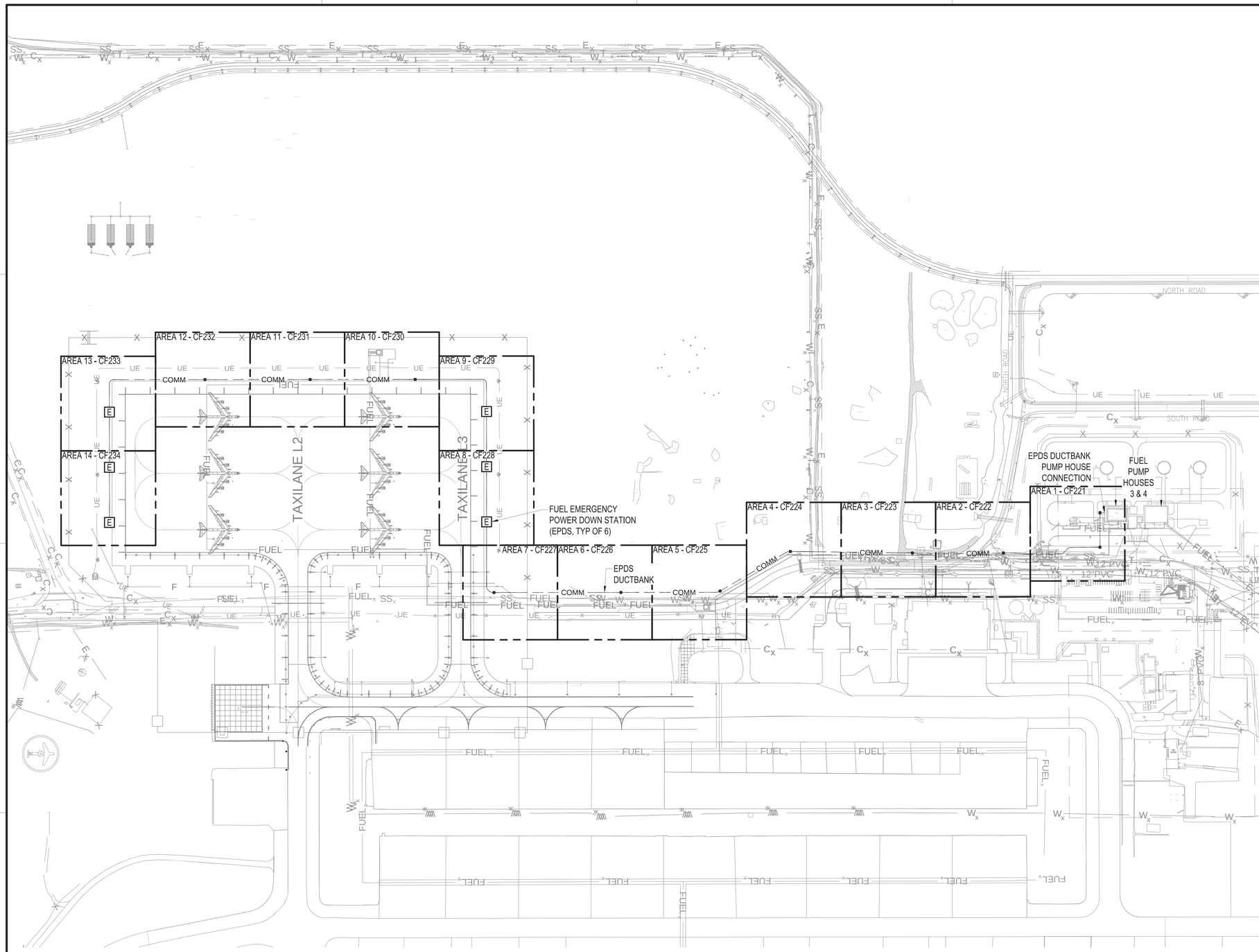

GENERAL NOTES

A	FIELD VERIFY DEPTH AND LOCATION OF EXISTING UTILITIES TO PLAN DUCTBANK ROUTING PRIOR TO INSTALLATION. SUBMIT REVISIONS TO DUCTBANK ROUTING TO ENGINEER FOR APPROVAL.
B	INSTALL DUCTBANK AT MINIMUM 24 INCHES BELOW GRADE.
C	INSTALL DUCTBANK WITH MINIMUM 12 INCHES VERTICAL CLEARANCE FROM CROSSING UTILITIES. SUBMIT REQUESTS FOR REDUCED CLEARANCE TO ENGINEER FOR APPROVAL.
D	INSTALL DUCTBANK WITH MINIMUM 12 INCHES HORIZONTAL CLEARANCE FROM ADJACENT STRUCTURES OR UTILITIES UNLESS INDICATED OTHERWISE. SUBMIT REQUESTS FOR REDUCED CLEARANCE TO ENGINEER FOR APPROVAL.
E	BACKFILL TRENCHES AND RESTORE DISTURBED UNPAVED AREAS TO THEIR ORIGINAL CONDITION OR BETTER IN ACCORDANCE WITH THE SPECIFICATIONS.
F	COORDINATE POINTS ARE TO CENTER OF STRUCTURE UNLESS OTHERWISE NOTED.

LEGEND

F	FIRE WATER
UE	UNDERGROUND ELECTRICAL
SD	STORM DRAIN
FUEL	FUEL LINE
COMM	EPDS DUCTBANK
E	EPDS STATION
▪	EPDS HANDHOLE

KEY PLAN

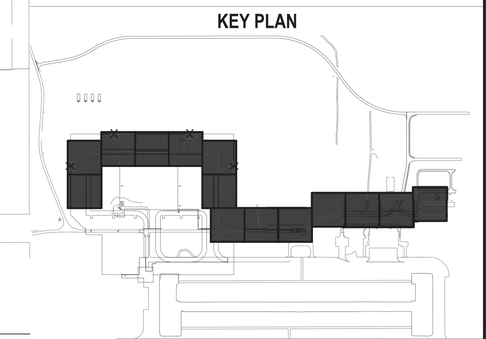

A1 OVERALL COMM PLAN

SCALE: 1" = 200'

GRAPHIC SCALE

0 100' 200' 400'

SCALE: 1"=200'

NORTH ARROW

TRUE N

NAVFAC

STATE OF TEXAS
WILLIAM BATTEY
151640
REGISTERED PROFESSIONAL ENGINEER
01/20/2026
SEAL

Jacobs / BURNS McDONNELL
JACOBS/B&M, A JOINT VENTURE
1100 NORTH GLEBE ROAD
SUITE 500
ARLINGTON, VA 22201

A/E Contract No. N62742-20-D-0002
A/E Task Order No. N62742-21F0315
JCG NO. 034306G3
A/E INFO

APPROVED
FOR COMMANDER NAVFAC DATE 02/02/2026

ACTIVITY
AFIMSC APPROVAL PER NAVFAC SAT-TO CHECKLIST

SATISFACTORY TO DATE 31 DEC 2025

DES:	WBB	DRW:	CDS	REV:	MSL
PM/DM					KKK
BRANCH MANAGER					SMK
CHIEF ENG/ARCH					SMK
FIRE PROTECTION					RO

DEPARTMENT OF THE NAVY
NAVAL FACILITIES ENGINEERING SYSTEMS COMMAND
NAVFAC PACIFIC
NAVAL FACILITIES ENGINEERING SYSTEMS COMMAND ~ PACIFIC
JOINT REGION MARIANAS (JRM)
ANDERSEN AIR FORCE BASE
GUAM

FY24 AJJY183012 (P-012),
PDI: NORTH AIRCRAFT PARKING RAMP

OVERALL COMM PLAN

SCALE: AS SHOWN
EPROJECTS NO.: 1665555
CONSTR CONTROL NO.
NAVFAC DRAWING NO. 17361926
SHEET 303 OF 377

CF102

REDESIGN FINAL SUBMITTAL

IF SHEET IS LESS THAN 22" X 34" REDUCED PRINT. USE GRAPHIC SCALES

FILE NAME: Z:\Clients\AMF\USNavy\Poc\133097_GuamP012NAR\Design\Civil\Sheets\P012_133097CF102.dwg
LAYOUT NAME: CF102
PLOTTED: 01/14/2026 2:25pm
USER: cdsubbs

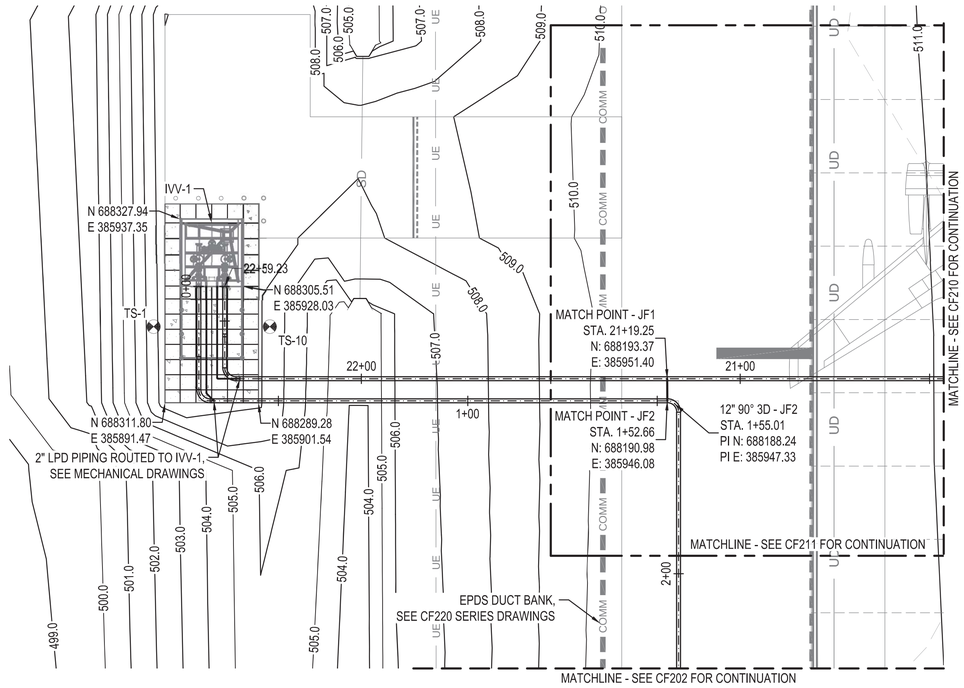

C2 AREA 1 ENLARGEMENT PLAN

SCALE: 1" = 20'

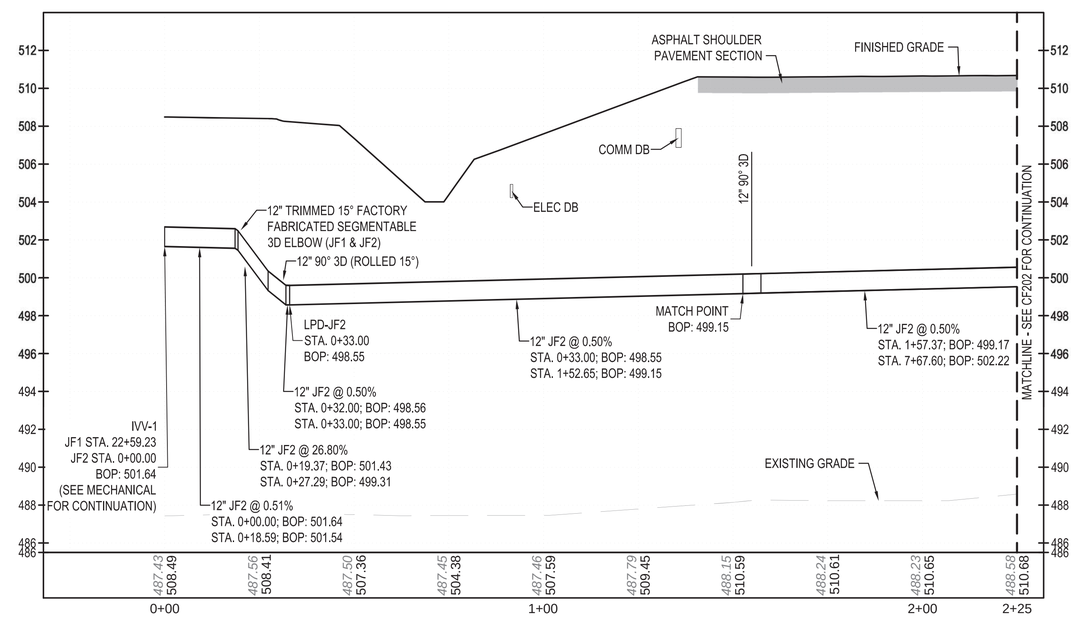

A2 JF2 PROFILE STA. 0+00 TO 2+25

VERTICAL SCALE: 1" = 4', HORIZONTAL SCALE: 1" = 20'

GENERAL NOTES

A MAINTAIN MINIMUM 12" CLEAR BETWEEN FUEL PIPES AND OTHER UTILITIES AT CROSSINGS.

LEGEND

W	WATER
SS	SANITARY SEWER
SD	STORM SEWER
F	FIRE WATER
UE	UNDERGROUND ELECTRICAL
JF	JET FUEL
25.0	CONTOUR
25.0	EXISTING CONTOUR
	ELECTRICAL/COMM MANHOLE
	TAXILANE LIGHTS
TS-#	CATHODIC PROTECTION TEST STATION (C4 / EK501)
	CONCRETE WALK (C4 / CF502)

KEY PLAN

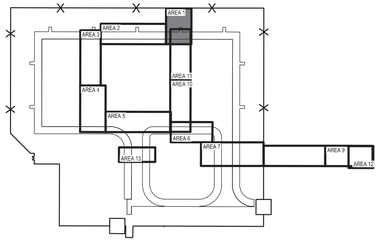

NAVFAC

STATE OF TEXAS
WILLIAM BATTEY
151640
PROFESSIONAL ENGINEER
01/20/2026
SEAL

Jacobs / BURNS McDONNELL
JACOBS/B&M, A JOINT VENTURE
1100 NORTH GLEBE ROAD
SUITE 500
ARLINGTON, VA 22201

A/E Contract No. N62742-20-D-0002
A/E Task Order No. N6274221F0315
JCG NO. 0343/0603
A/E INFO

APPROVED
FOR COMMANDER NAVFAC DATE 02/02/2026

ACTIVITY
AFIMSC APPROVAL PER NAVFAC SAT-TO CHECKLIST

SATISFACTORY TO DATE 31 DEC 2025

DES: WBB	DRW: CDS	REV: MSL	
PM/DM			KKK
BRANCH MANAGER			SMK
CHIEF ENG/ARCH			SMK
FIRE PROTECTION			RO

DEPARTMENT OF THE NAVY
NAVFAC PACIFIC
NAVAL FACILITIES ENGINEERING SYSTEMS COMMAND
NAVAL FACILITIES ENGINEERING SYSTEMS COMMAND ~ PACIFIC
JOINT REGION MARIANAS (JRM)
ANDERSEN AIR FORCE BASE
GUAM

FY24 AJJY183012 (P-012),
PDI: NORTH AIRCRAFT PARKING RAMP

FUEL PLAN AND PROFILE - AREA 1

SCALE: AS SHOWN
EPROJECTS NO.: 1665555
CONSTR CONTROL NO.
NAVFAC DRAWING NO. 17361927
SHEET 304 OF 377

CF201

REDESIGN FINAL SUBMITTAL

GRAPHIC SCALE
0 4' 8'
VERTICAL SCALE: 1" = 4'
0 10' 20' 40'
PLAN AND HORIZONTAL SCALE: 1" = 20'

NORTH ARROW
TRUE N

IF SHEET IS LESS THAN 22" X 34" REDUCED PRINT. USE GRAPHIC SCALES

FILE NAME: Z:\Clients\ANF\USNavy\Pac\133097_GuamP012NAR\Design\Civil\Sheets\P012_133097CF201.dwg
LAYOUT NAME: CF201
PLOTTED: 01/14/2026 2:26pm
USER: cdsuba