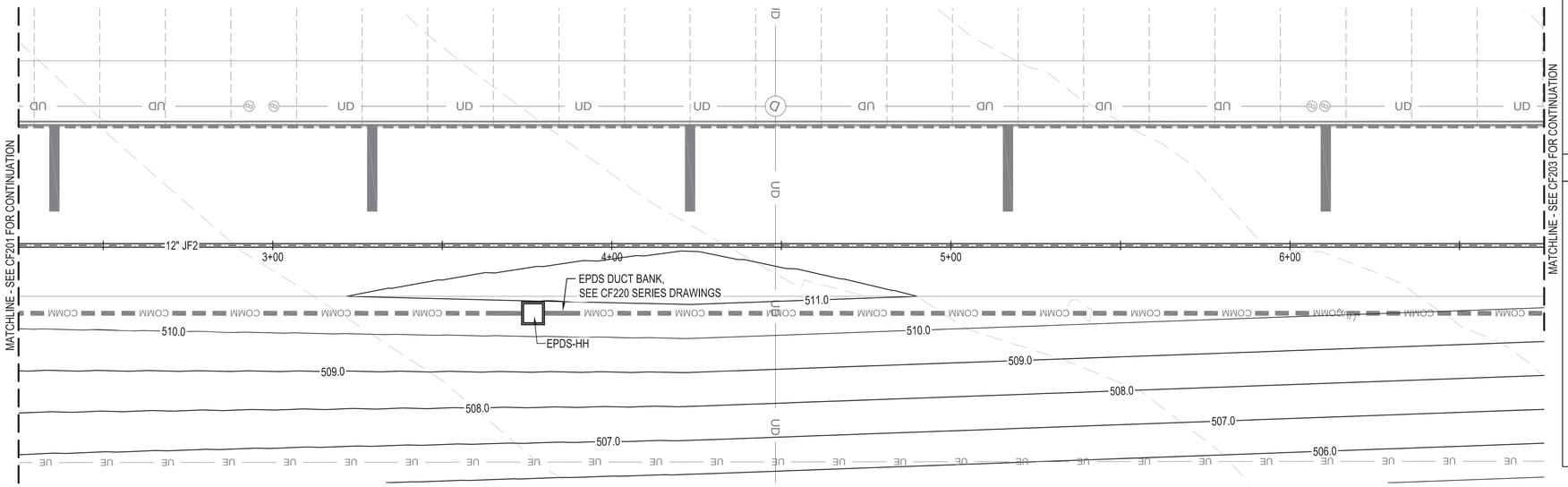

B1 AREA 2 ENLARGEMENT PLAN

SCALE: 1" = 20'

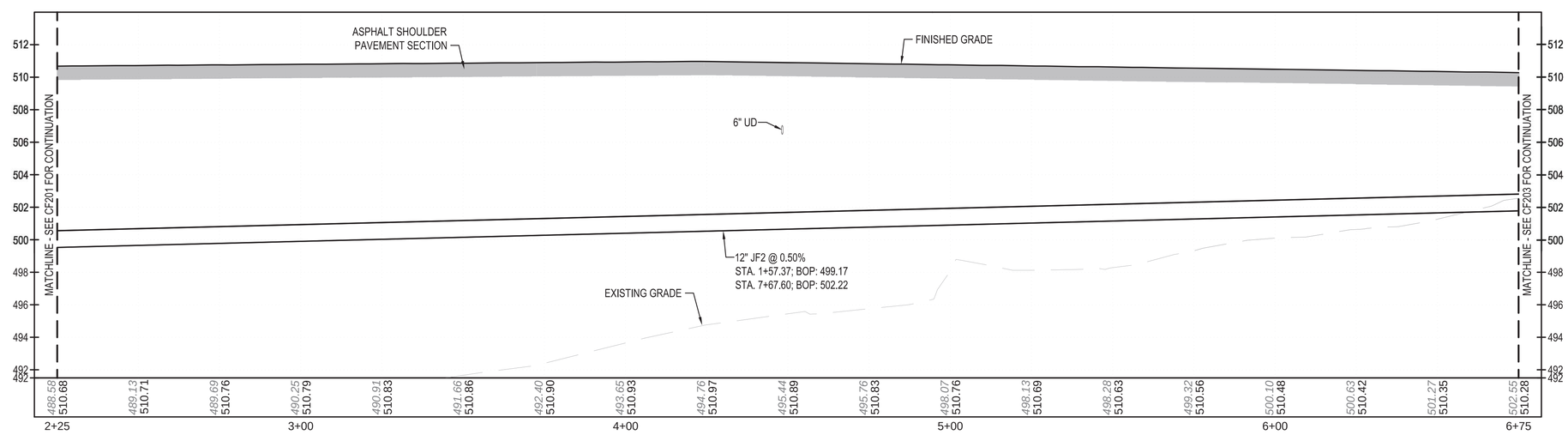

A1 JF2 PROFILE STA. 2+25 TO 6+75

VERTICAL SCALE: 1" = 4', HORIZONTAL SCALE: 1" = 20'

GENERAL NOTES

A	MAINTAIN MINIMUM 12" CLEAR BETWEEN FUEL PIPES AND OTHER UTILITIES AT CROSSINGS.

LEGEND

W	WATER
SS	SANITARY SEWER
SD	STORM SEWER
F	FIRE WATER
UE	UNDERGROUND ELECTRICAL
JF	JET FUEL
25.0	CONTOUR
25.0	EXISTING CONTOUR
	ELECTRICAL/COMM MANHOLE
	TAXILANE LIGHTS

KEY PLAN

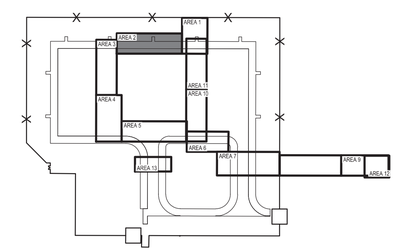

NAVFAC

STATE OF TEXAS
WILLIAM BATTEY
151640
REGISTERED PROFESSIONAL ENGINEER
01/20/2026
SEAL

Jacobs / BURNS McDONNELL
JACOBS/B&M, A JOINT VENTURE
1100 NORTH GLEBE ROAD
SUITE 500
ARLINGTON, VA 22201

A/E Contract No. N62742-20-D-0002
A/E Task Order No. N6274221F0315
JCG NO. 0343K603

A/E INFO

APPROVED
FOR COMMANDER NAVFAC DATE 02/02/2026

ACTIVITY
AFIMSC APPROVAL PER NAVFAC SAT-TO CHECKLIST

SATISFACTORY TO DATE 31 DEC 2025

DES: WBB	DRW: CDS	REV: MSL
PM/DM		KKK
BRANCH MANAGER		SMK
CHIEF ENG/ARCH		SMK
FIRE PROTECTION		RO

DEPARTMENT OF THE NAVY
NAVAL FACILITIES ENGINEERING SYSTEMS COMMAND
NAVFAC PACIFIC
NAVAL FACILITIES ENGINEERING SYSTEMS COMMAND – PACIFIC
JOINT REGION MARIANAS (JRM)
ANDERSEN AIR FORCE BASE
GUAM

FY24 AUY183012 (P-012),
PDI: NORTH AIRCRAFT PARKING RAMP

FUEL PLAN AND PROFILE - AREA 2

SCALE: AS SHOWN
EPROJECTS NO.: 1665555
CONSTR CONTROL NO.
NAVFAC DRAWING NO. 17361928
SHEET 305 OF 377

CF202

GRAPHIC SCALE
0 4' 8'
VERTICAL SCALE: 1" = 4'
0 10' 20' 40'
PLAN AND HORIZONTAL SCALE: 1" = 20'

NORTH ARROW
TRUE N

IF SHEET IS LESS THAN 22" X 34" REDUCED PRINT. USE GRAPHIC SCALES

REDESIGN FINAL SUBMITTAL

FILE NAME: Z:\Clients\ANF\USNavy\Poc\13097_GuamP012NAR\Design\Civil\Sheets\P012_13097CF201.dwg
LAYOUT NAME: CF202
PLOTTED: 01/14/2026 2:26pm
USER: cdsoubs

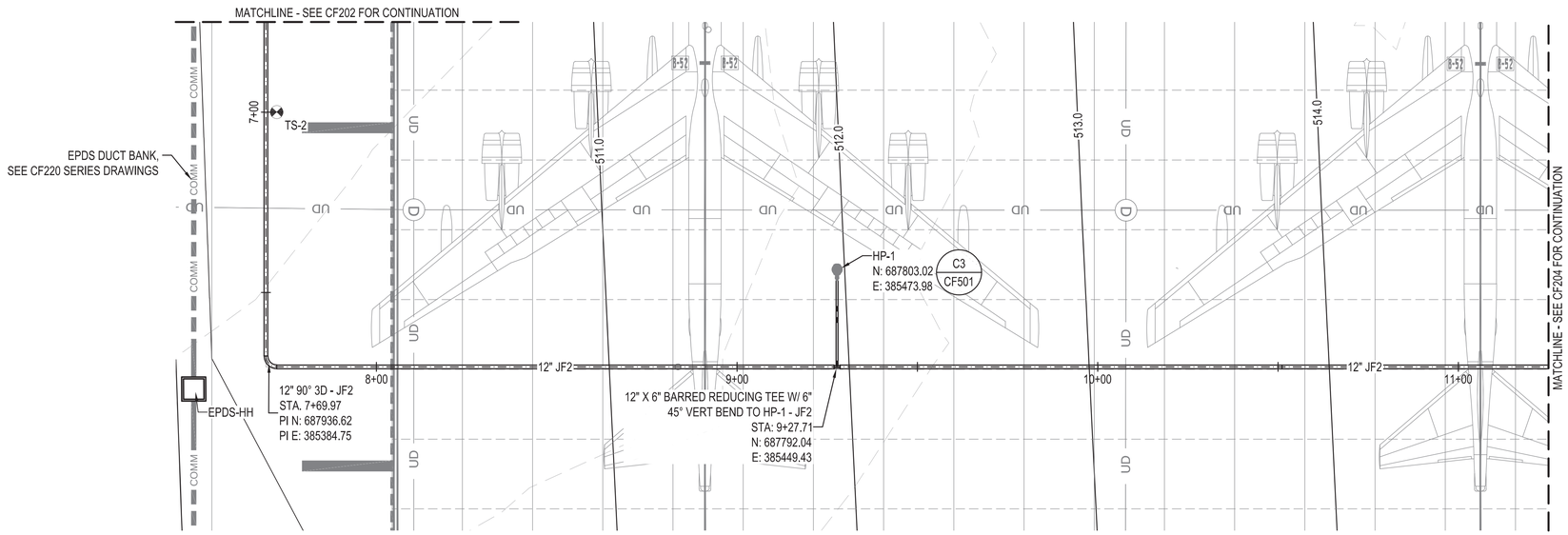

B1 AREA 3 ENLARGEMENT PLAN

SCALE: 1" = 20'

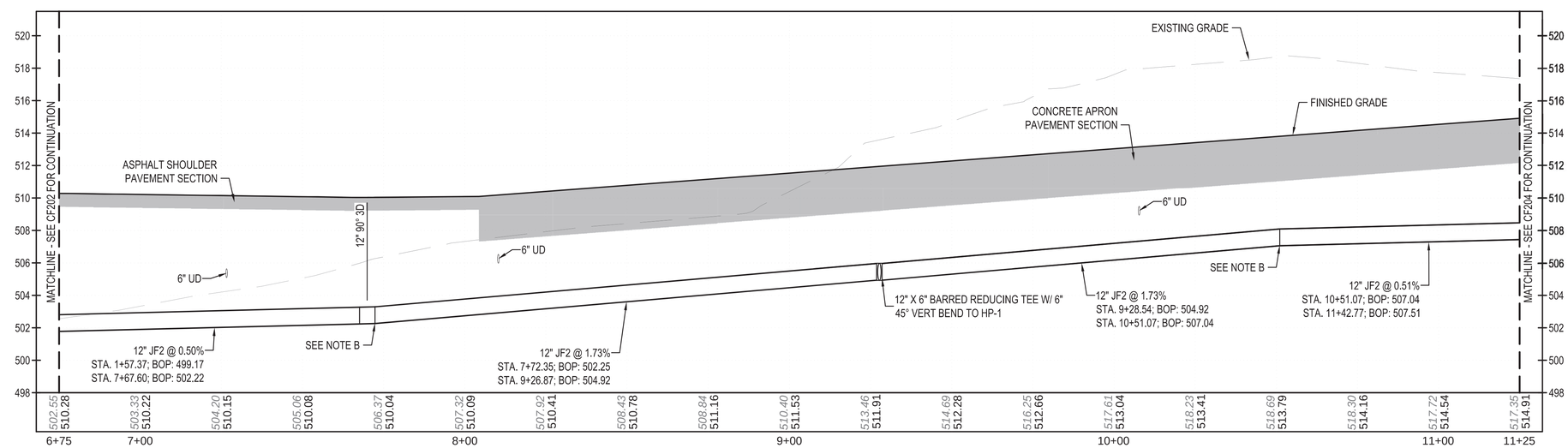

A1 JF2 PROFILE STA. 6+75 TO 11+25

VERTICAL SCALE: 1" = 4', HORIZONTAL SCALE: 1" = 20'

GENERAL NOTES

A MAINTAIN MINIMUM 12" CLEAR BETWEEN FUEL PIPES AND OTHER UTILITIES AT CROSSINGS.

B VERTICAL ALIGNMENT TRANSITIONS MUST BE ACCOMPLISHED WITHOUT A MITERED WELD OR FITTING. EXCAVATE TO REQUIRED TRENCH DEPTH AND ALLOW PIPE TO BEND TO ACCOMPLISH THE VERTICAL TRANSITION. SLOPE MUST BE CONTINUOUS BETWEEN POINTS INDICATED. BENDING RADIUS MUST NOT EXCEED MAXIMUM ALLOWABLE IN ACCORDANCE WITH ASME B31.4.

LEGEND

W	WATER
SS	SANITARY SEWER
SD	STORM SEWER
F	FIRE WATER
UE	UNDERGROUND ELECTRICAL
JF	JET FUEL
25.0	CONTOUR
25.0	EXISTING CONTOUR
	ELECTRICAL/COMM MANHOLE
	TAXILANE LIGHTS
TS-#	CATHODIC PROTECTION TEST STATION (C4 / EK501)

KEY PLAN

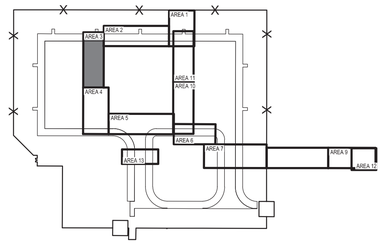

NAVFAC

STATE OF TEXAS
WILLIAM BATTEY
151640
PROFESSIONAL ENGINEER
01/20/2026
SEAL

Jacobs / BURNS McDONNELL
JACOBS/B&M, A JOINT VENTURE
1100 NORTH GLEBE ROAD
SUITE 500
ARLINGTON, VA 22201

A/E Contract No. N62742-20-D-0002
A/E Task Order No. N6274221F0315
JCG NO. 01M30603
A/E INFO

APPROVED
FOR COMMANDER NAVFAC DATE 02/02/2026

ACTIVITY
AFIMSC APPROVAL PER NAVFAC SAT-TO CHECKLIST

SATISFACTORY TO DATE 31 DEC 2025

DES:	WBB	DRW:	CDS	REV:	MSL
PM/DM					KKK
BRANCH MANAGER					SMK
CHIEF ENG/ARCH					SMK
FIRE PROTECTION					RO

DEPARTMENT OF THE NAVY
NAVAL FACILITIES ENGINEERING SYSTEMS COMMAND
NAVFAC PACIFIC
NAVAL FACILITIES ENGINEERING SYSTEMS COMMAND – PACIFIC
JOINT REGION MARIANAS (JRM)
ANDERSEN AIR FORCE BASE
GUAM

FY24 AUY183012 (P-012),
PDI: NORTH AIRCRAFT PARKING RAMP

FUEL PLAN AND PROFILE - AREA 3

SCALE: AS SHOWN
EPROJECTS NO.: 1665555
CONSTR CONTROL NO.
NAVFAC DRAWING NO. 17361929
SHEET 306 OF 377

CF203

REDESIGN FINAL SUBMITTAL

GRAPHIC SCALE
0 4' 8'
VERTICAL SCALE: 1" = 4'
0 10' 20' 40'
PLAN AND HORIZONTAL SCALE: 1" = 20'

NORTH ARROW
TRUE N

IF SHEET IS LESS THAN 22" X 34" REDUCED PRINT. USE GRAPHIC SCALES

FILE NAME: Z:\Clients\ANF\USNavy\Proc\133097_GuamP012NAR\Design\Civil\Sheets\P012_133097CF201.dwg
LAYOUT NAME: CF203
PLOTTED: 01/14/2026 2:27pm
USER: cd9ouda

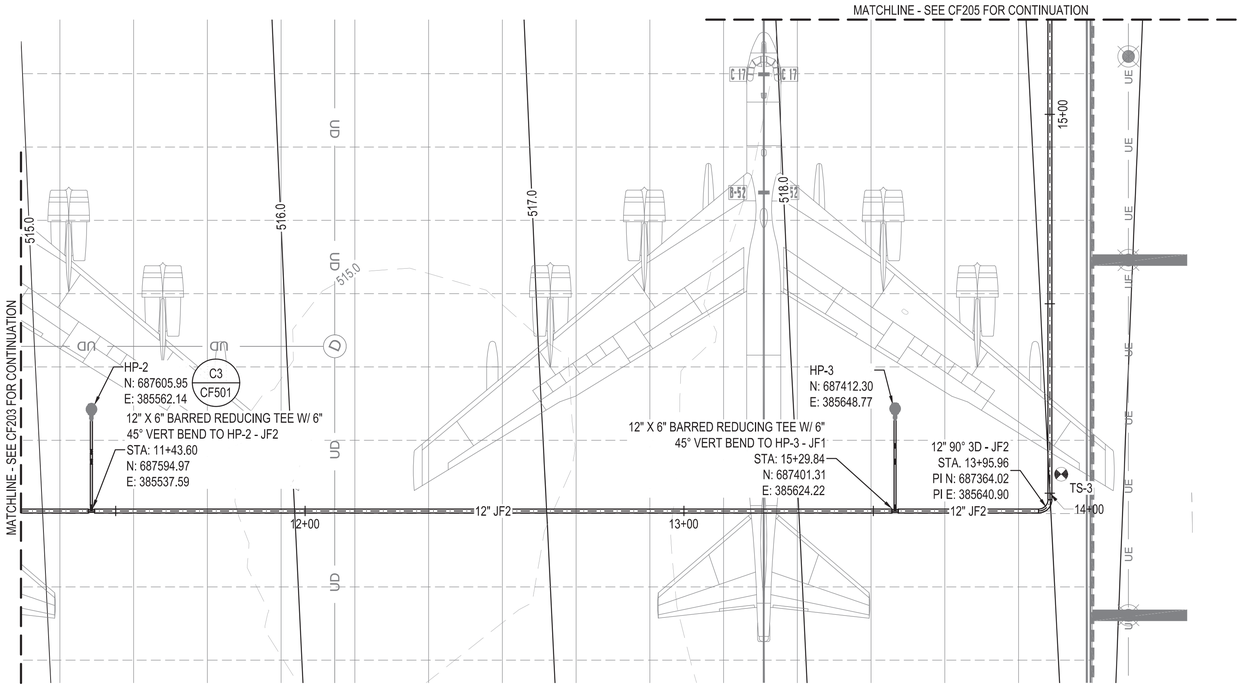

B1 AREA 4 ENLARGEMENT PLAN

SCALE: 1" = 20'

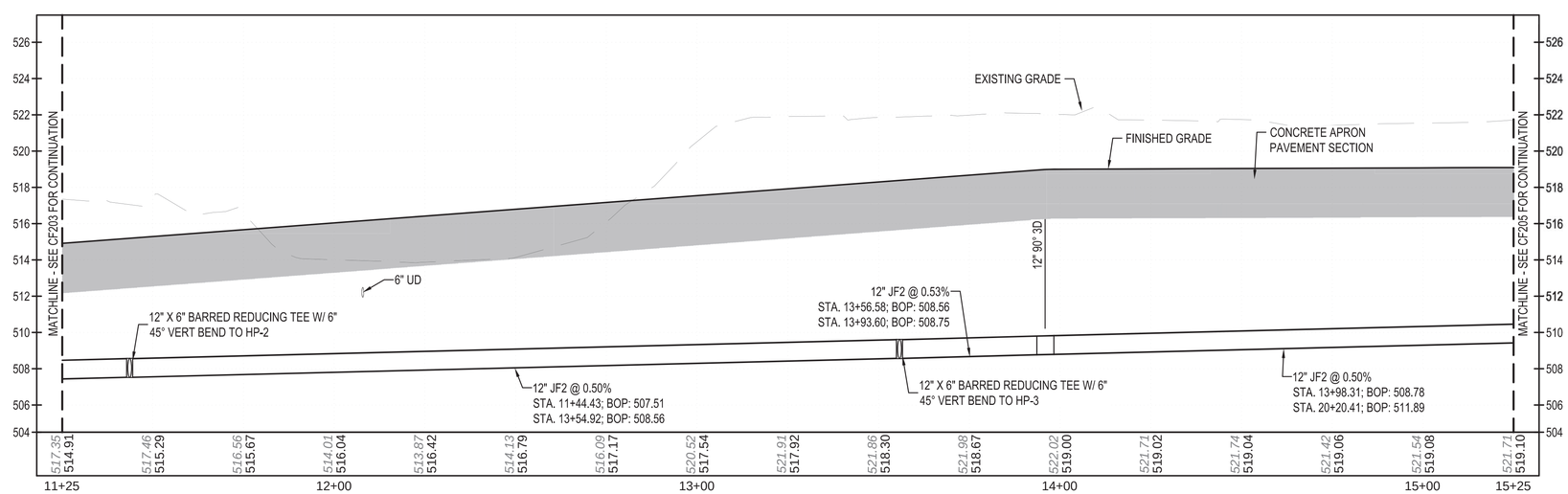

A1 JF2 PROFILE STA. 11+25 TO 15+25

VERTICAL SCALE: 1" = 4', HORIZONTAL SCALE: 1" = 20'

GENERAL NOTES

A	MAINTAIN MINIMUM 12" CLEAR BETWEEN FUEL PIPES AND OTHER UTILITIES AT CROSSINGS.

LEGEND

W	WATER
SS	SANITARY SEWER
SD	STORM SEWER
F	FIRE WATER
UE	UNDERGROUND ELECTRICAL
JF	JET FUEL
25.0	CONTOUR
25.0	EXISTING CONTOUR
	ELECTRICAL/COMM MANHOLE
	TAXILANE LIGHTS
TS-#	CATHODIC PROTECTION TEST STATION (C4 / EK501)

KEY PLAN

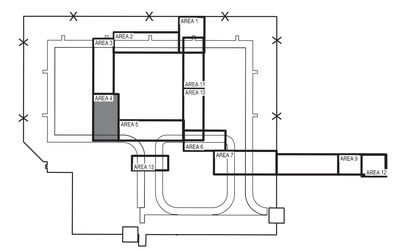

NAVFAC

STATE OF TEXAS
WILLIAM BATTEY
151640
REGISTERED PROFESSIONAL ENGINEER
01/20/2026
SEAL

Jacobs / BURNS McDONNELL
JACOBS/B&M, A JOINT VENTURE
1100 NORTH GLEBE ROAD
SUITE 500
ARLINGTON, VA 22201

A/E Contract No. N62742-20-D-0002
A/E Task Order No. N6274221F0315
JCG NO. 0343826/03

A/E INFO

APPROVED
FOR COMMANDER NAVFAC DATE 02/02/2026

ACTIVITY
AFIMSC APPROVAL PER NAVFAC SAT-TO CHECKLIST

SATISFACTORY TO DATE	31 DEC 2025
DES: WBB	DRW: CDS	REV: MSL
PM/DM	KKK
BRANCH MANAGER	SMK
CHIEF ENG/ARCH	SMK
FIRE PROTECTION	RO

DEPARTMENT OF THE NAVY
NAVFAC PACIFIC
NAVAL FACILITIES ENGINEERING SYSTEMS COMMAND
NAVAL FACILITIES ENGINEERING SYSTEMS COMMAND – PACIFIC
JOINT REGION MARIANAS (JRM)
ANDERSEN AIR FORCE BASE
GUAM

FY24 AUY183012 (P-012),
PDI: NORTH AIRCRAFT PARKING RAMP

FUEL PLAN AND PROFILE - AREA 4

SCALE: AS SHOWN
EPROJECTS NO.: 1665555
CONSTR CONTROL NO.
NAVFAC DRAWING NO. 17361930
SHEET 307 OF 377

CF204

GRAPHIC SCALE
0 4' 8'
VERTICAL SCALE: 1" = 4'
0 10' 20' 40'
PLAN AND HORIZONTAL SCALE: 1" = 20'

NORTH ARROW
TRUE N

IF SHEET IS LESS THAN 22" X 34" REDUCED PRINT. USE GRAPHIC SCALES

REDESIGN FINAL SUBMITTAL

FILE NAME: Z:\Clients\ANF\USNavy\Poc\133097_Guam\P012NAR\Design\Civil\Sheets\P012_133097CF201.dwg
LAYOUT NAME: CF204
PLOTTED: 01/14/2026 2:27pm
USER: sdsubio

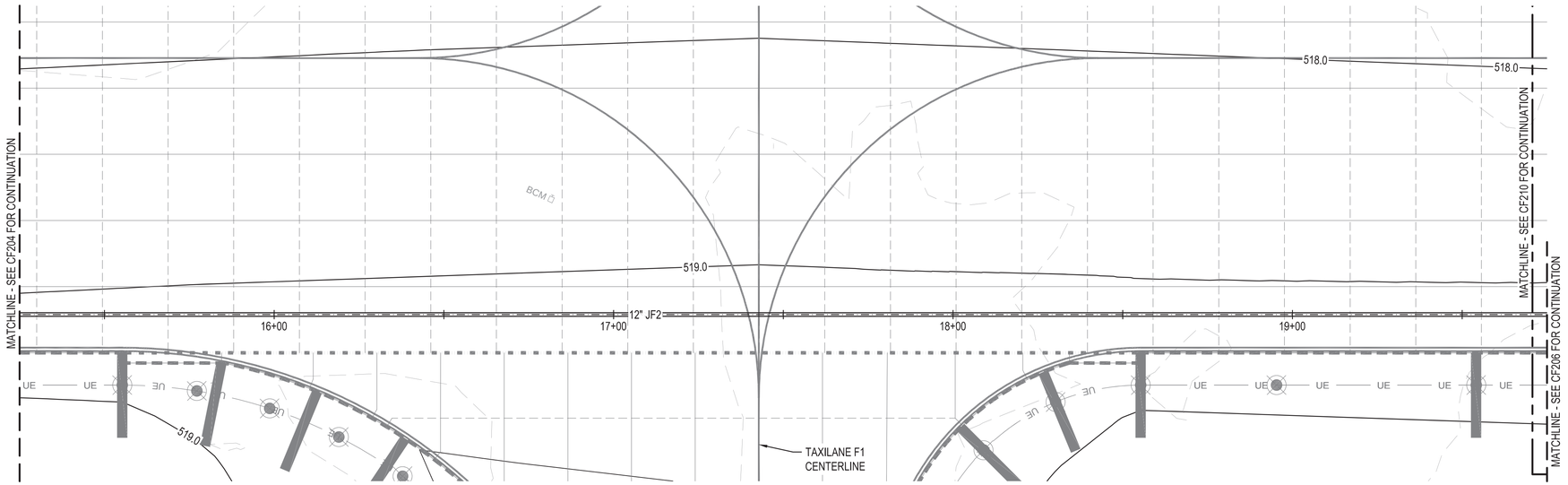

B1 AREA 5 ENLARGEMENT PLAN

SCALE: 1" = 20'

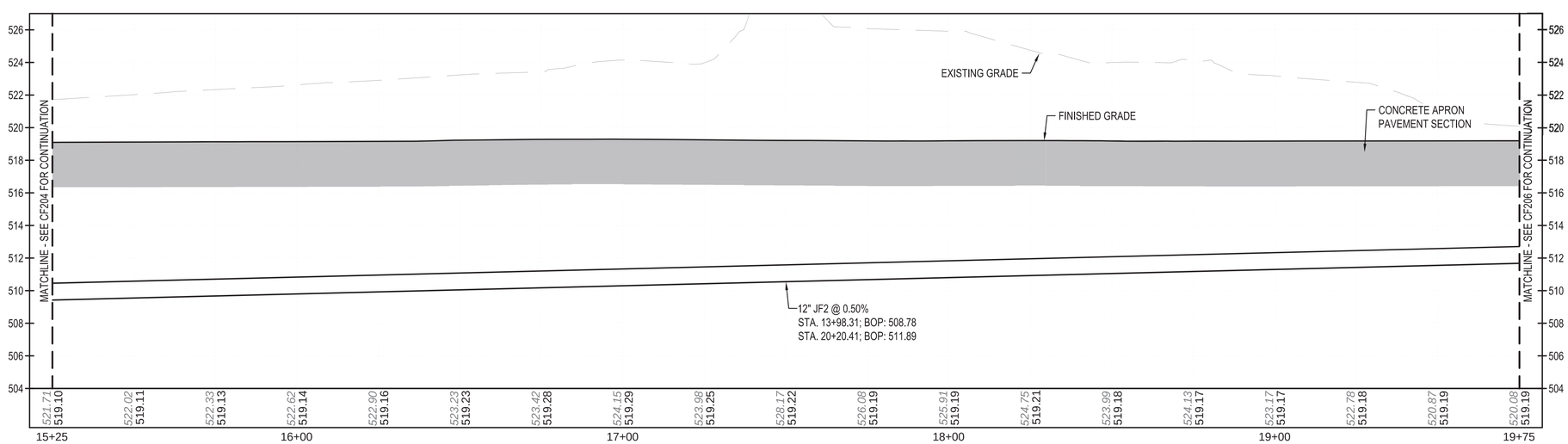

A1 JF2 PROFILE STA. 15+25 TO 19+75

VERTICAL SCALE: 1" = 4', HORIZONTAL SCALE: 1" = 20'

GENERAL NOTES

A	MAINTAIN MINIMUM 12" CLEAR BETWEEN FUEL PIPES AND OTHER UTILITIES AT CROSSINGS.

LEGEND

W	WATER
SS	SANITARY SEWER
SD	STORM SEWER
F	FIRE WATER
UE	UNDERGROUND ELECTRICAL
JF	JET FUEL
25.0	CONTOUR
25.0	EXISTING CONTOUR
	ELECTRICAL/COMM MANHOLE
	TAXILANE LIGHTS

KEY PLAN

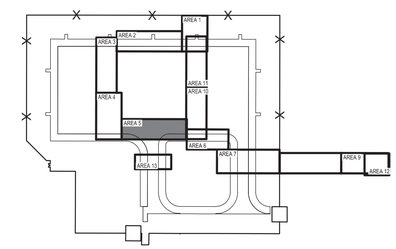

NAVFAC

STATE OF TEXAS
WILLIAM BATTEY
151640
PROFESSIONAL ENGINEER
01/20/2026
SEAL

Jacobs / BURNS McDONNELL
JACOBS/B&M, A JOINT VENTURE
1100 NORTH GLEBE ROAD
SUITE 500
ARLINGTON, VA 22201

A/E Contract No. N62742-20-D-0002
A/E Task Order No. N6274221F0315
JCG NO. 0343/0603

A/E INFO

APPROVED
Eva Mize
FOR COMMANDER NAVFAC DATE 02/02/2026

ACTIVITY
AFIMSC APPROVAL PER NAVFAC SAT-TO CHECKLIST

SATISFACTORY TO DATE 31 DEC 2025

DES:	WBB	DRW: CDS	REV: MSL
PM/DM			KKK
BRANCH MANAGER			SMK
CHIEF ENG/ARCH			SMK
FIRE PROTECTION			RO

DEPARTMENT OF THE NAVY
NAVAL FACILITIES ENGINEERING SYSTEMS COMMAND
NAVFAC PACIFIC
NAVAL FACILITIES ENGINEERING SYSTEMS COMMAND – PACIFIC
JOINT REGION MARIANAS (JRM)
ANDERSEN AIR FORCE BASE
GUAM

FY24 AJJY183012 (P-012),
PDI: NORTH AIRCRAFT PARKING RAMP

FUEL PLAN AND PROFILE - AREA 5

SCALE: AS SHOWN
EPROJECTS NO.: 1665555
CONSTR CONTROL NO.
NAVFAC DRAWING NO. 17361931
SHEET 308 OF 377

CF205

REDESIGN FINAL SUBMITTAL

GRAPHIC SCALE

0 4' 8'
VERTICAL SCALE: 1" = 4'
0 10' 20' 40'
PLAN AND HORIZONTAL SCALE: 1" = 20'

NORTH ARROW
TRUE N

IF SHEET IS LESS THAN 22" X 34" REDUCED PRINT. USE GRAPHIC SCALES

FILE NAME: Z:\Clients\ANF\USNavy\Poc\133097_GuamP012NAR\Design\Civil\Sheets\P012_133097CF201.dwg
LAYOUT NAME: CF205
PLOTTED: 01/14/2026 2:28pm
USER: cdsoubs

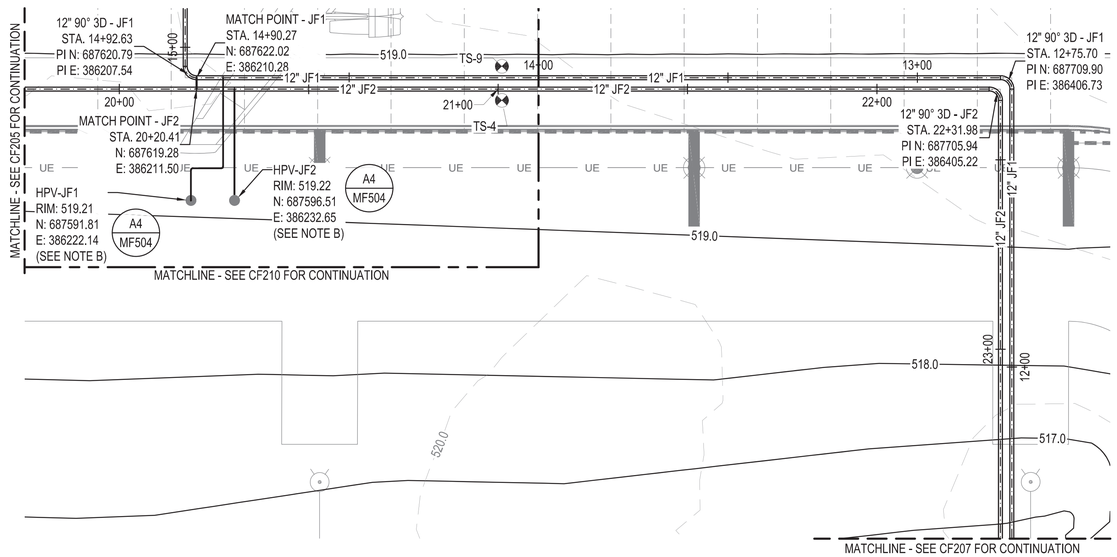

B1 AREA 6 ENLARGED PLAN

SCALE: 1" = 20'

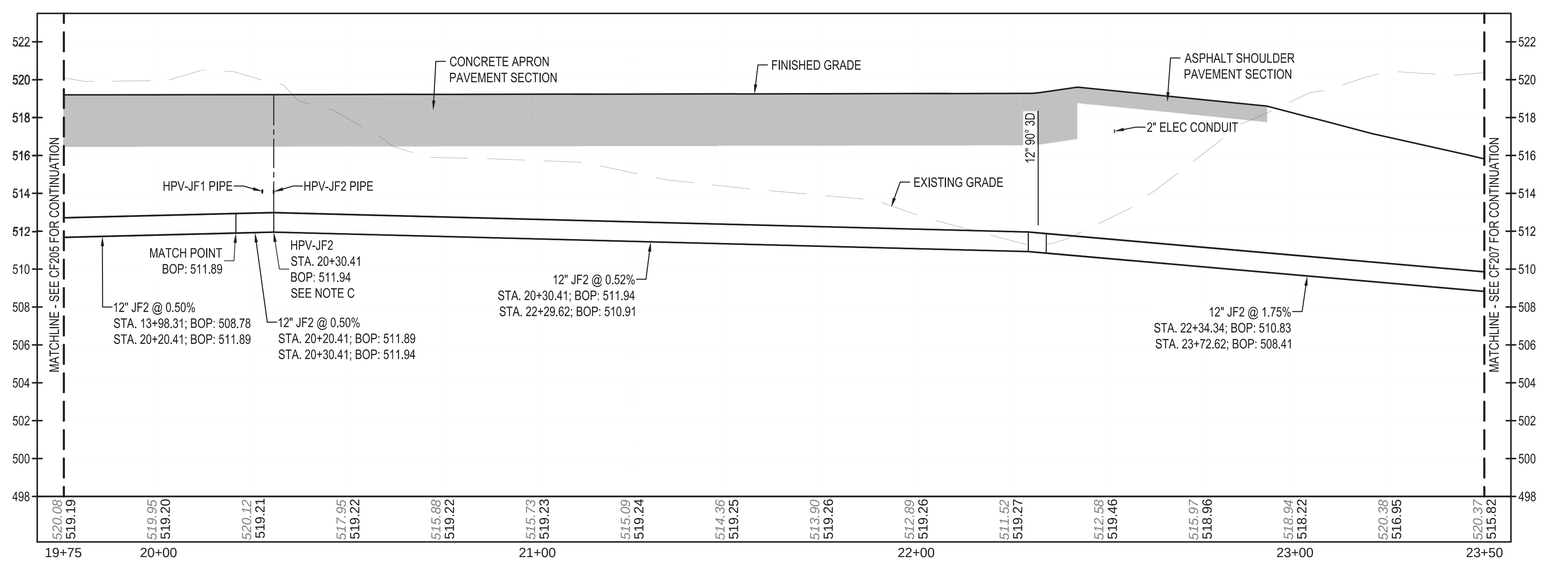

A1 JF2 PROFILE STA. 19+75 TO 23+50

VERTICAL SCALE: 1" = 4', HORIZONTAL SCALE: 1" = 20'

GENERAL NOTES

A MAINTAIN MINIMUM 12" CLEAR BETWEEN FUEL PIPES AND OTHER UTILITIES AT CROSSINGS.

B RIM ELEVATION FOR HPV PIT IN PAVED AREA IS SET 1.5 INCHES ABOVE ADJACENT GRADE. SURROUNDING PAVEMENT MUST SLOPE AWAY FROM PIT LID AT A MAXIMUM 12H:1.

C VERTICAL ALIGNMENT TRANSITIONS MUST BE ACCOMPLISHED WITHOUT A MITERED WELD OR FITTING. EXCAVATE TO REQUIRED TRENCH DEPTH AND ALLOW PIPE TO BEND TO ACCOMPLISH THE VERTICAL TRANSITION. SLOPE MUST BE CONTINUOUS BETWEEN POINTS INDICATED. BENDING RADIUS MUST NOT EXCEED MAXIMUM ALLOWABLE IN ACCORDANCE WITH ASME B31.4.

LEGEND

W	WATER
SS	SANITARY SEWER
SD	STORM SEWER
F	FIRE WATER
UE	BURIED ELECTRICAL
JF	JET FUEL
25.0	CONTOUR
25.0	EXISTING CONTOUR
	ELECTRICAL/COMM MANHOLE
	TAXILANE LIGHTS
TS-#	CATHODIC PROTECTION TEST STATION (C4 / EK501)

KEY PLAN

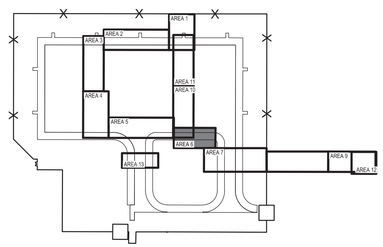

NAVFAC

STATE OF TEXAS
WILLIAM BATTEY
151640
PROFESSIONAL ENGINEER
01/20/2026
SEAL

Jacobs / BURNS McDONNELL
JACOBS/B&M, A JOINT VENTURE
1100 NORTH GLEBE ROAD
SUITE 500
ARLINGTON, VA 22201

A/E Contract No. N62742-20-D-0002
A/E Task Order No. N62742-21F-0315
JCG NO. 0343/0603
A/E INFO

APPROVED
FOR COMMANDER NAVFAC DATE 02/02/2026

ACTIVITY
AFIMSC APPROVAL PER NAVFAC SAT-TO CHECKLIST

SATISFACTORY TO DATE 31 DEC 2025

DES:	WBB	DRW: CDS	REV: MSL
PM/DM			KKK
BRANCH MANAGER			SMK
CHIEF ENG/ARCH			SMK
FIRE PROTECTION			RO

DEPARTMENT OF THE NAVY
NAVFAC PACIFIC
NAVAL FACILITIES ENGINEERING SYSTEMS COMMAND
NAVAL FACILITIES ENGINEERING SYSTEMS COMMAND – PACIFIC
JOINT REGION MARIANAS (JRM)
ANDERSEN AIR FORCE BASE
GUAM

FY24 AUY183012 (P-012),
PDI: NORTH AIRCRAFT PARKING RAMP

FUEL PLAN AND PROFILE - AREA 6

SCALE: AS SHOWN
EPROJECTS NO.: 1665555
CONSTR CONTROL NO.
NAVFAC DRAWING NO. 17361932
SHEET 309 OF 377

CF206

REDESIGN FINAL SUBMITTAL

GRAPHIC SCALE
0 4' 8'
VERTICAL SCALE: 1" = 4'
0 10' 20' 40'
PLAN AND HORIZONTAL SCALE: 1" = 20'

NORTH ARROW
TRUE N

IF SHEET IS LESS THAN 22" X 34" REDUCED PRINT. USE GRAPHIC SCALES

FILE NAME: Z:\Clients\ANF\USNavy\Pac\133097_GuamP012NAR\Design\Civil\Sheets\P012_133097CF201.dwg
LAYOUT NAME: CF206
PLOTTED: 01/14/2026 2:28pm
USER: cdsouba

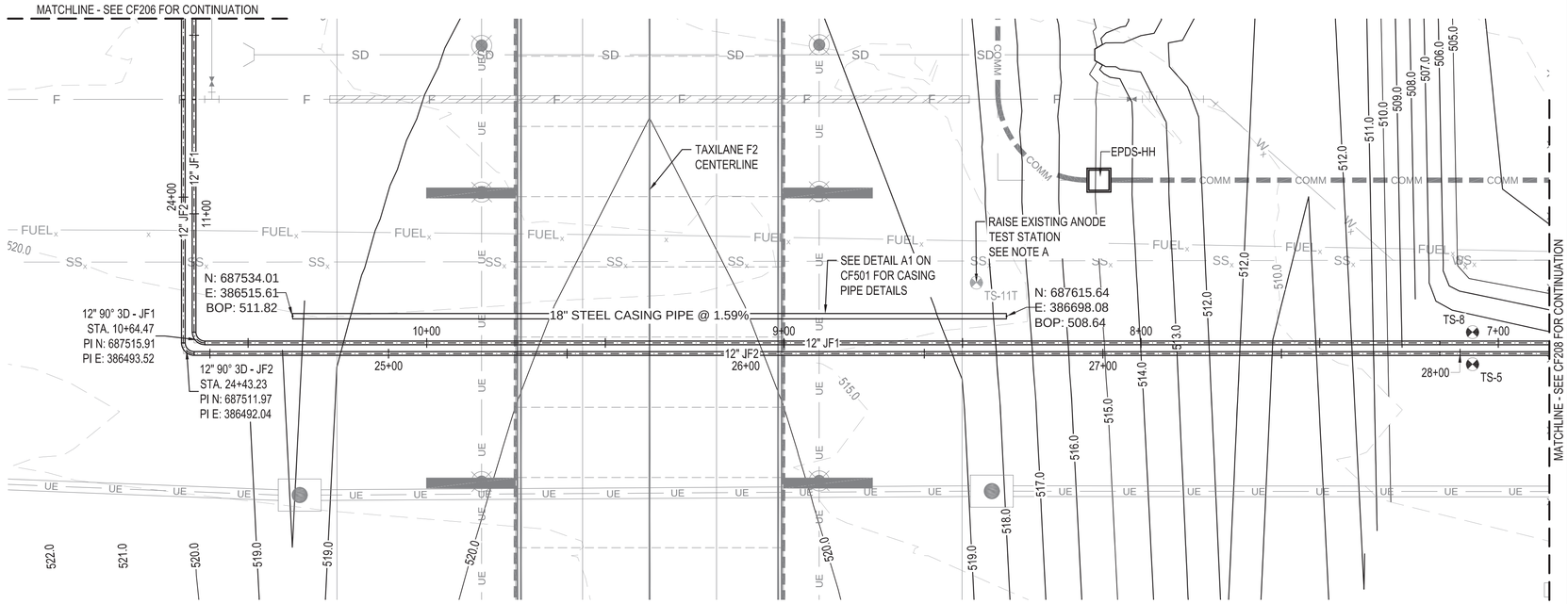

B1 AREA 7 ENLARGED PLAN

SCALE: 1" = 20'

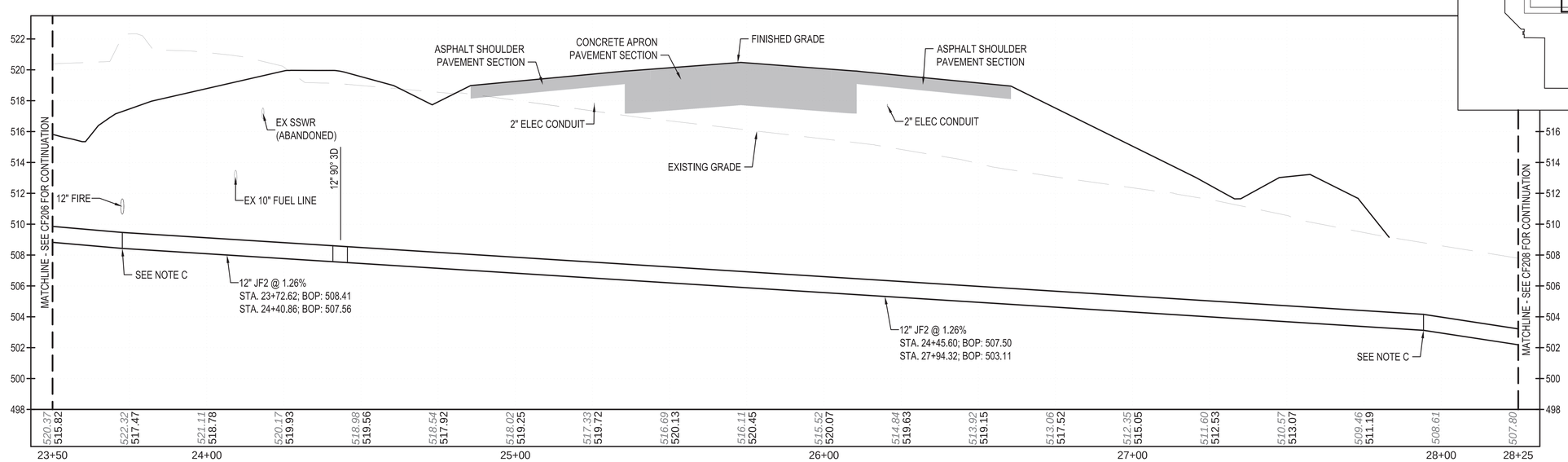

A1 JF2 PROFILE STA. 23+50 + 28+25

VERTICAL SCALE: 1" = 4', HORIZONTAL SCALE: 1" = 20'

GENERAL NOTES

A EXISTING CATHODIC PROTECTION ANODE TEST STATIONS WITHIN LIMITS OF GRADING, AT APPROX. 460-FOOT INTERVALS ALONG EXISTING 10" FUEL TRANSFER LINE, MUST BE RELOCATED OR RAISED TO FINISHED GRADE AS INDICATED. LOCATIONS SHOWN ARE BASED ON PIPELINE AS-BUILT INFORMATION. SEE DETAILS ON CATHODIC PROTECTION DRAWING EK502.

B MAINTAIN MINIMUM 12" CLEAR BETWEEN FUEL PIPES AND OTHER UTILITIES AT CROSSINGS.

C VERTICAL ALIGNMENT TRANSITIONS MUST BE ACCOMPLISHED WITHOUT A MITERED WELD OR FITTING. EXCAVATE TO REQUIRED TRENCH DEPTH AND ALLOW PIPE TO BEND TO ACCOMPLISH THE VERTICAL TRANSITION. SLOPE MUST BE CONTINUOUS BETWEEN POINTS INDICATED. BENDING RADIUS MUST NOT EXCEED MAXIMUM ALLOWABLE IN ACCORDANCE WITH ASME B31.4.

LEGEND

W	WATER
SS	SANITARY SEWER
SD	STORM SEWER
F	FIRE WATER
UE	BURIED ELECTRICAL
JF	JET FUEL
25.0	CONTOUR
25.0	EXISTING CONTOUR
	ELECTRICAL/COMM MANHOLE
	TAXILANE LIGHTS
TS-#	CATHODIC PROTECTION TEST STATION

C4 / EK501

KEY PLAN

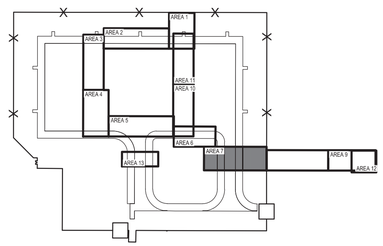

NAVFAC

STATE OF TEXAS
WILLIAM BATTEY
151640
LICENSED PROFESSIONAL ENGINEER
01/20/2026
SEAL

Jacobs / BURNS McDONNELL
JACOBS/B&M, A JOINT VENTURE
1100 NORTH GLEBE ROAD
SUITE 500
ARLINGTON, VA 22201

A/E Contract No. N62742-20-D-0002
A/E Task Order No. N6274221F0315
JCG NO. 0343/0603
A/E INFO

APPROVED
FOR COMMANDER NAVFAC DATE 02/02/2026

ACTIVITY
AFIMSC APPROVAL PER NAVFAC SAT-TO CHECKLIST

SATISFACTORY TO DATE 31 DEC 2025

DES:	WBB	DRW:	CDS	REV:	MBL
PM/DM					KKK
BRANCH MANAGER					SMK
CHIEF ENG/ARCH					SMK
FIRE PROTECTION					RO

DEPARTMENT OF THE NAVY
NAVAL FACILITIES ENGINEERING SYSTEMS COMMAND
NAVFAC PACIFIC
ANDERSEN AIR FORCE BASE

NAVAL FACILITIES ENGINEERING SYSTEMS COMMAND – PACIFIC
JOINT REGION MARIANAS (JRM)
GUAM

FY24 AJJY183012 (P-012);
PDI: NORTH AIRCRAFT PARKING RAMP

FUEL PLAN AND PROFILE - AREA 7

SCALE: AS SHOWN
EPROJECTS NO.: 1665555
CONSTR CONTROL NO.
NAVFAC DRAWING NO. 17361933
SHEET 310 OF 377

CF207

GRAPHIC SCALE
0 4' 8'
VERTICAL SCALE: 1" = 4'
0 10' 20' 40'
PLAN AND HORIZONTAL SCALE: 1" = 20'

NORTH ARROW
TRUE N

IF SHEET IS LESS THAN 22" X 34" REDUCED PRINT. USE GRAPHIC SCALES

REDESIGN FINAL SUBMITTAL

FILE NAME: Z:\Clients\ANF\USNavy\Poc\133097_GuamP012NAR\Design\Civil\Sheets\P012_133097CF201.dwg
LAYOUT NAME: CF207
PLOTTED: 01/14/2026 2:28pm
USER: cd9ouiba

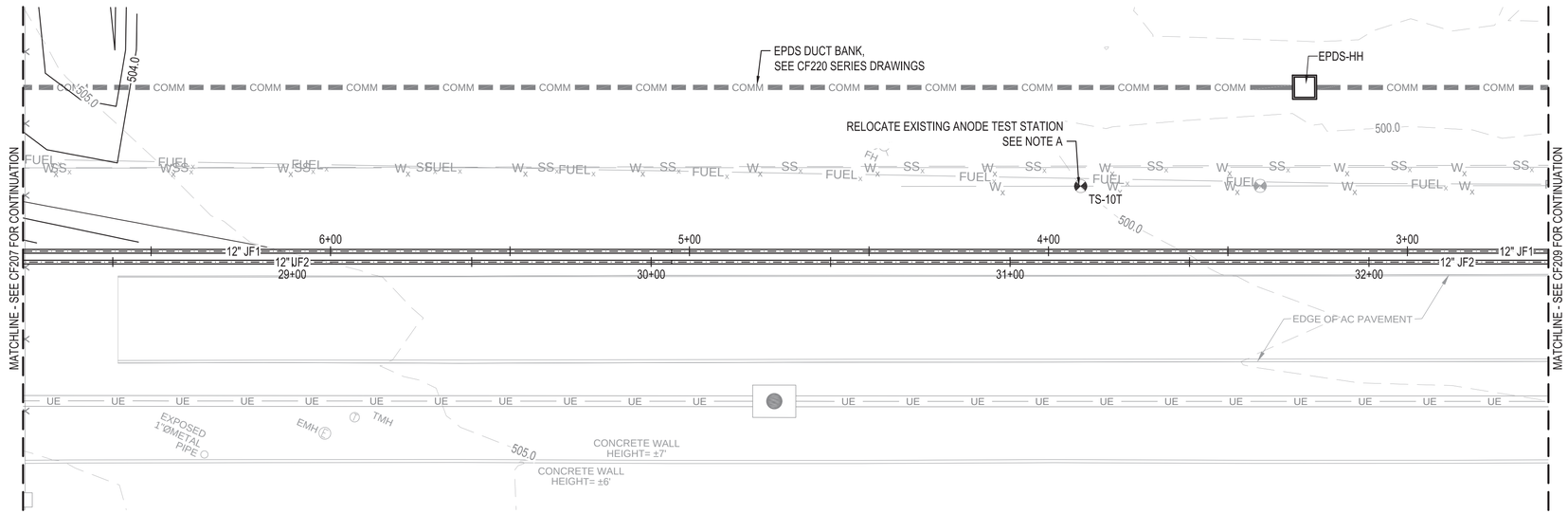

B1 AREA 8 ENLARGEMENT PLAN

SCALE: 1" = 20'

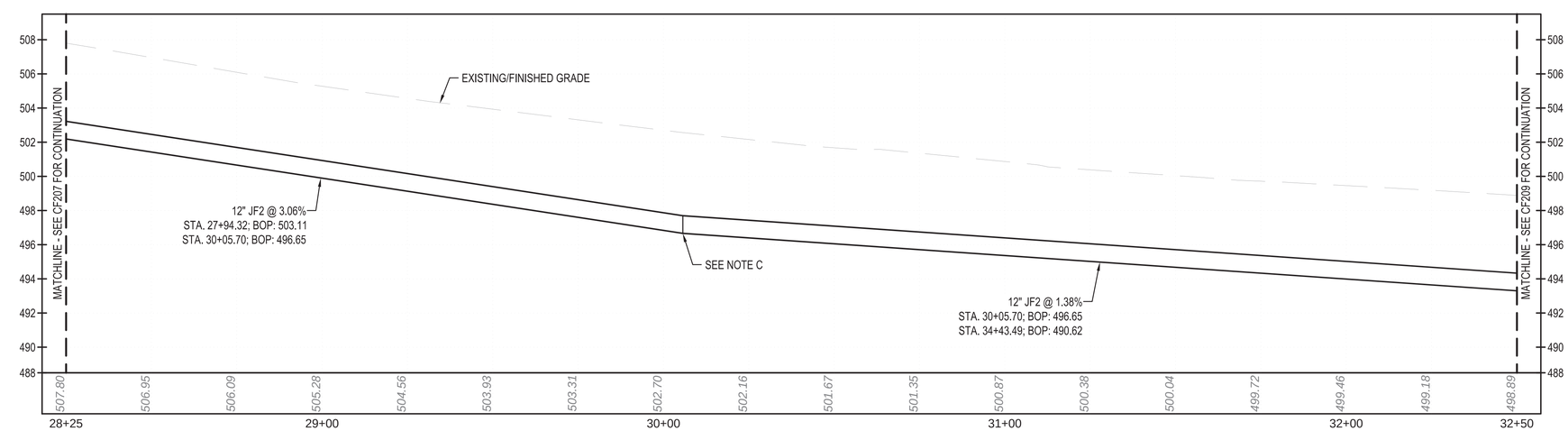

A1 JF2 PROFILE STA. 28+25 TO 32+50

VERTICAL SCALE: 1" = 4', HORIZONTAL SCALE: 1" = 20'

GENERAL NOTES

A EXISTING CATHODIC PROTECTION ANODE TEST STATIONS WITHIN LIMITS OF GRADING, AT APPROX. 460-FOOT INTERVALS ALONG EXISTING 10" FUEL TRANSFER LINE, MUST BE RELOCATED OR RAISED TO FINISHED GRADE AS INDICATED. LOCATIONS SHOWN ARE BASED ON PIPELINE AS-BUILT INFORMATION. SEE DETAILS ON CATHODIC PROTECTION DRAWING EK502.

B MAINTAIN MINIMUM 12" CLEAR BETWEEN FUEL PIPES AND OTHER UTILITIES AT CROSSINGS.

C VERTICAL ALIGNMENT TRANSITIONS MUST BE ACCOMPLISHED WITHOUT A MITERED WELD OR FITTING. EXCAVATE TO REQUIRED TRENCH DEPTH AND ALLOW PIPE TO BEND TO ACCOMPLISH THE VERTICAL TRANSITION. SLOPE MUST BE CONTINUOUS BETWEEN POINTS INDICATED. BENDING RADIUS MUST NOT EXCEED MAXIMUM ALLOWABLE IN ACCORDANCE WITH ASME B31.4.

LEGEND

W	WATER
SS	SANITARY SEWER
SD	STORM SEWER
F	FIRE WATER
UE	BURIED ELECTRICAL
JF	JET FUEL
25.0	CONTOUR
25.0	EXISTING CONTOUR
	ELECTRICAL/COMM MANHOLE
	TAXILANE LIGHTS
TS-#	CATHODIC PROTECTION TEST STATION

C4
EK501

KEY PLAN

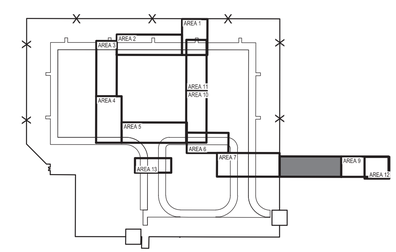

NAVFAC

STATE OF TEXAS
WILLIAM BATTEY
151640
LICENSED
PROFESSIONAL ENGINEER
01/20/2026
SEAL

Jacobs / BURNS McDONNELL
JACOBS/B&M, A JOINT VENTURE
1100 NORTH GLEBE ROAD
SUITE 500
ARLINGTON, VA 22201

A/E Contract No. N62742-20-D-0002
A/E Task Order No. N62742-21F0315
JCG NO. 034/36003
A/E INFO

APPROVED
FOR COMMANDER NAVFAC DATE 02/02/2026

ACTIVITY
AFIMSC APPROVAL PER NAVFAC SAT-TO CHECKLIST

SATISFACTORY TO DATE 31 DEC 2025

DES: WBB	DRW: CDS	REV:	MSL
PM/OM			KKK
BRANCH MANAGER			SMK
CHIEF ENG/ARCH			SMK
FIRE PROTECTION			RO

DEPARTMENT OF THE NAVY
NAVAL FACILITIES ENGINEERING SYSTEMS COMMAND
NAVFAC PACIFIC
NAVAL FACILITIES ENGINEERING SYSTEMS COMMAND – PACIFIC
JOINT REGION MARIANAS (JRM)
ANDERSEN AIR FORCE BASE
GUAM

FY24 AJJY183012 (P-012),
PDI: NORTH AIRCRAFT PARKING RAMP

FUEL PLAN AND PROFILE - AREA 8

SCALE: AS SHOWN
EPROJECTS NO.: 1665555
CONSTR CONTROL NO.
NAVFAC DRAWING NO. 17361934
SHEET 311 OF 377

CF208

REDESIGN FINAL SUBMITTAL

GRAPHIC SCALE

0 4' 8'
VERTICAL SCALE: 1" = 4'
0 10' 20' 40'
PLAN AND HORIZONTAL SCALE: 1" = 20'

NORTH ARROW
TRUE N

IF SHEET IS LESS THAN 22" X 34"
REDUCED PRINT. USE GRAPHIC SCALES

FILE NAME: Z:\Clients\ANF\USNavy\Poc\133097_GuamP012NAR\Design\Civil\Sheets\P012_133097CF201.dwg
LAYOUT NAME: CF208
PLOTTED: 01/14/2026 2:29pm
USER: cdsuba

GENERAL NOTES

A	EXISTING CATHODIC PROTECTION ANODE TEST STATIONS WITHIN LIMITS OF GRADING, AT APPROX. 460-FOOT INTERVALS ALONG EXISTING 10" FUEL TRANSFER LINE, MUST BE RELOCATED OR RAISED TO FINISHED GRADE AS INDICATED. LOCATIONS SHOWN ARE BASED ON PIPELINE AS-BUILT INFORMATION. SEE DETAILS ON CATHODIC PROTECTION DRAWING EK502
B	MAINTAIN MINIMUM 12" CLEAR BETWEEN FUEL PIPES AND OTHER UTILITIES AT CROSSINGS.

LEGEND

W	WATER
SS	SANITARY SEWER
SD	STORM SEWER
F	FIRE WATER
UE	BURIED ELECTRICAL
JF	JET FUEL
25.0	CONTOUR
25.0	EXISTING CONTOUR
	ELECTRICAL/COMM MANHOLE
	TAXILANE LIGHTS
TS-#	CATHODIC PROTECTION TEST STATION (C4 / EK501)
	CONCRETE WALK (C4 / CF502)

KEY PLAN

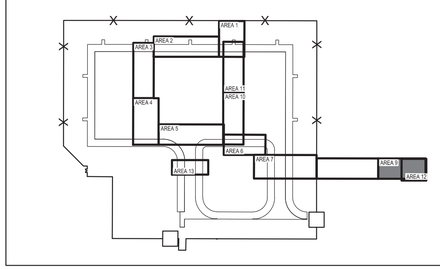

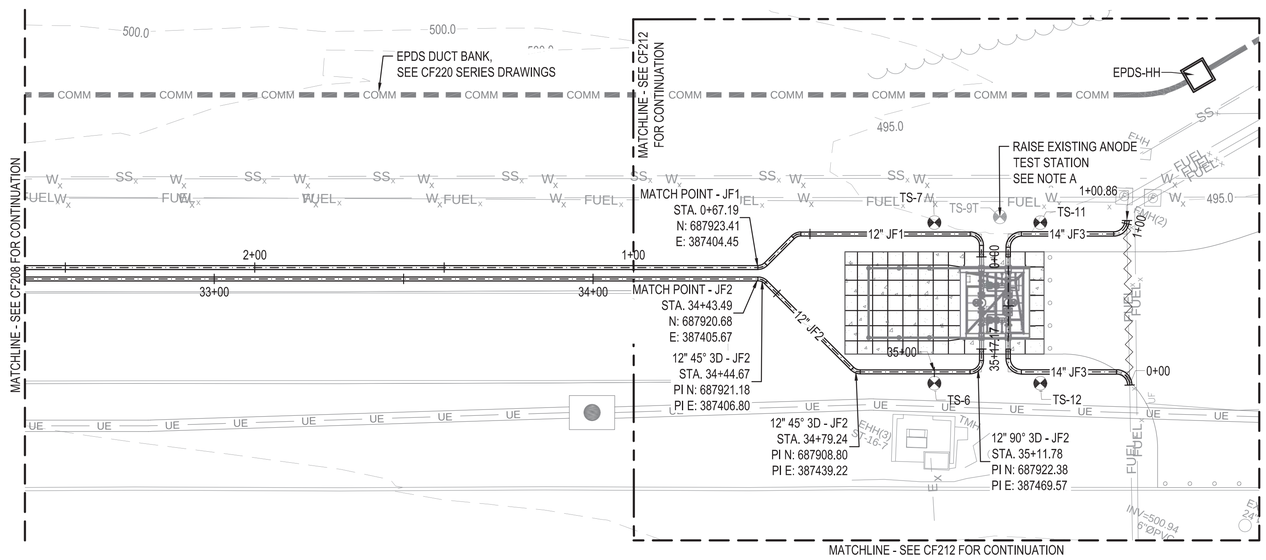

B2 AREA 9 ENLARGEMENT PLAN

SCALE: 1" = 20'

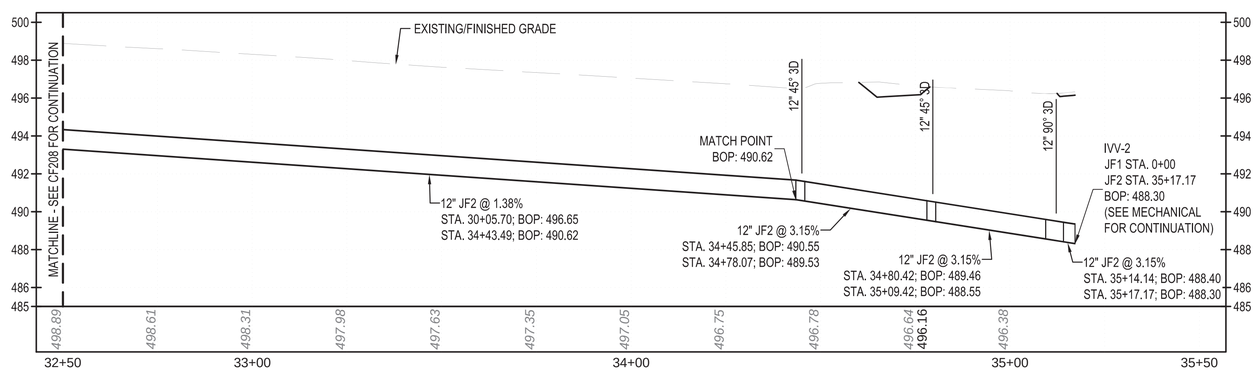

A2 JF2 PROFILE STA. 32+50 TO END

VERTICAL SCALE: 1" = 4', HORIZONTAL SCALE: 1" = 20'

GRAPHIC SCALE

0 4' 8'
VERTICAL SCALE: 1" = 4'
0 10' 20' 40'
PLAN AND HORIZONTAL SCALE: 1" = 20'

NORTH ARROW
TRUE N

NAVFAC

STATE OF TEXAS
WILLIAM BATTEY
151640
REGISTERED PROFESSIONAL ENGINEER
01/20/2026
SEAL

Jacobs / BURNS McDONNELL
JACOBS/B&M, A JOINT VENTURE
1100 NORTH GLEBE ROAD
SUITE 500
ARLINGTON, VA 22201

A/E Contract No. N62742-20-D-0002
A/E Task Order No. N6274221F0315
JCG NO. 034326603
A/E INFO

APPROVED
FOR COMMANDER NAVFAC DATE 02/02/2026

ACTIVITY
AFIMSC APPROVAL PER NAVFAC SAT-TO CHECKLIST

SATISFACTORY TO DATE 31 DEC 2025

DES:	DRW: CDS	REV:	MSL
PM/DM WBB			KKK
BRANCH MANAGER			SMK
CHIEF ENG/ARCH			SMK
FIRE PROTECTION			RO

DEPARTMENT OF THE NAVY
NAVFAC PACIFIC
NAVAL FACILITIES ENGINEERING SYSTEMS COMMAND – PACIFIC
ANDERSEN AIR FORCE BASE
NAVAL FACILITIES ENGINEERING SYSTEMS COMMAND
JOINT REGION MARIANAS (JRM)
GUAM

FY24 AUY183012 (P-012)
PDI: NORTH AIRCRAFT PARKING RAMP
FUEL PLAN AND PROFILE - AREA 9

SCALE:	AS SHOWN
EPROJECTS NO.:	1665555
CONSTR CONTROL NO.	
NAVFAC DRAWING NO.	17361935
SHEET	312 OF 377

CF209

REDESIGN FINAL SUBMITTAL

IF SHEET IS LESS THAN 22" X 34" REDUCED PRINT. USE GRAPHIC SCALES

FILE NAME: Z:\Clients\ANF\USNavy\Pac\133097_GuamP012NAR\Design\Civil\Sheets\P012_133097CF201.dwg
LAYOUT NAME: CF209
PLOTTED: 01/14/2026 2:29pm
USER: cdsoubs

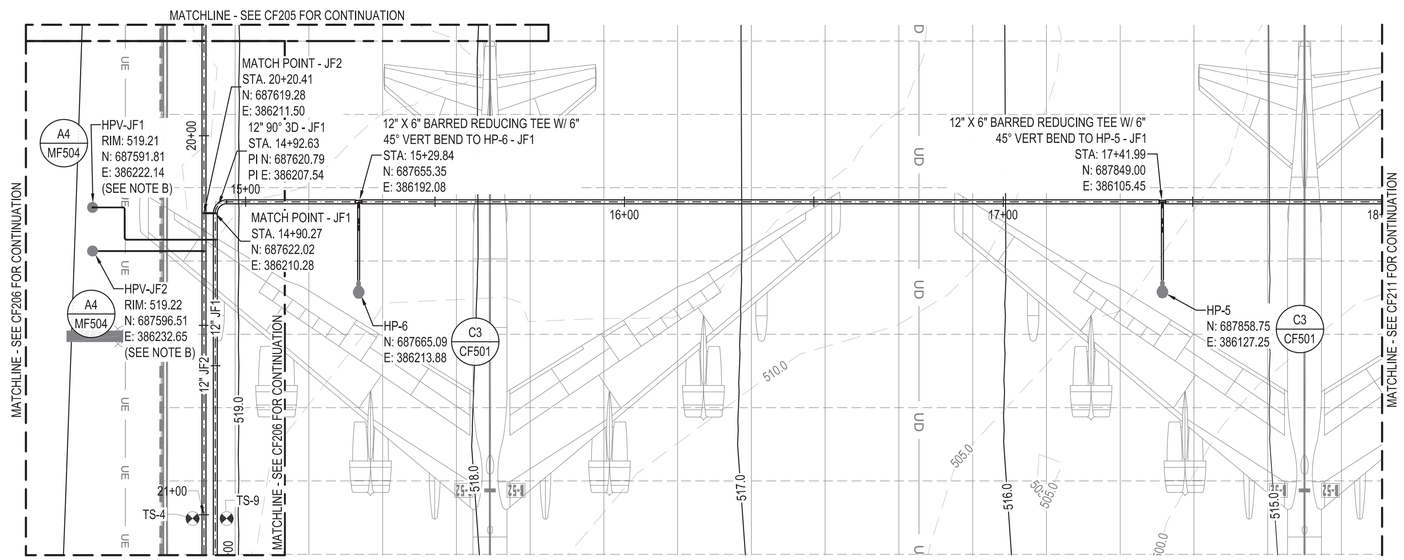

C1 AREA 10 ENLARGEMENT PLAN

SCALE: 1" = 20'

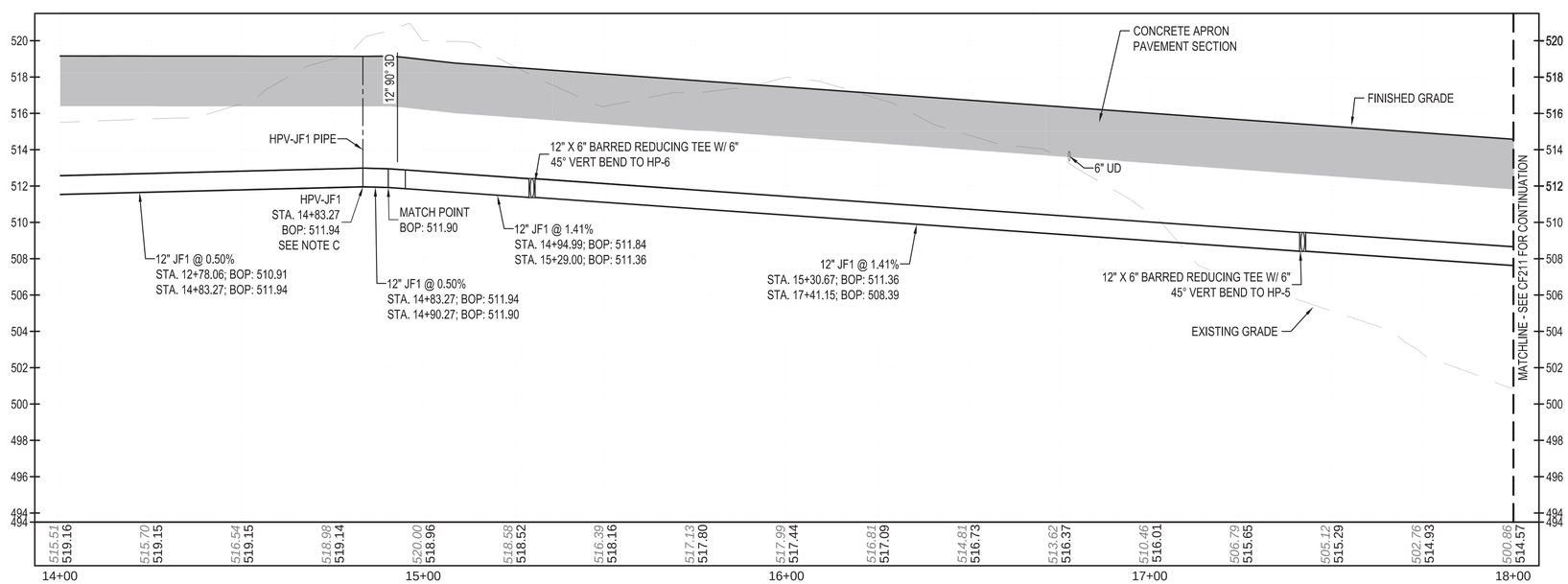

A1 JF1 PROFILE STA. 14+00 TO 18+00

VERTICAL SCALE: 1" = 4', HORIZONTAL SCALE: 1" = 20'

GENERAL NOTES

A	MAINTAIN MINIMUM 12" CLEAR BETWEEN FUEL PIPES AND OTHER UTILITIES AT CROSSINGS.
B	RIM ELEVATION FOR HPV PIT IN PAVED AREA IS SET 1.5 INCHES ABOVE ADJACENT GRADE. SURROUNDING PAVEMENT MUST SLOPE AWAY FROM PIT LID AT A MAXIMUM 12H:1V.
C	VERTICAL ALIGNMENT TRANSITIONS MUST BE ACCOMPLISHED WITHOUT A MITERED WELD OR FITTING. EXCAVATE TO REQUIRED TRENCH DEPTH AND ALLOW PIPE TO BEND TO ACCOMPLISH THE VERTICAL TRANSITION. SLOPE MUST BE CONTINUOUS BETWEEN POINTS INDICATED. BENDING RADIUS MUST NOT EXCEED MAXIMUM ALLOWABLE IN ACCORDANCE WITH ASME B31.4.

LEGEND

W	WATER
SS	SANITARY SEWER
SD	STORM SEWER
F	FIRE WATER
UE	UNDERGROUND ELECTRICAL
JF	JET FUEL
25.0	CONTOUR
25.0	EXISTING CONTOUR
	ELECTRICAL/COMM MANHOLE
	TAXILANE LIGHTS
TS-#	CATHODIC PROTECTION TEST STATION (C4 / EK501)

KEY PLAN

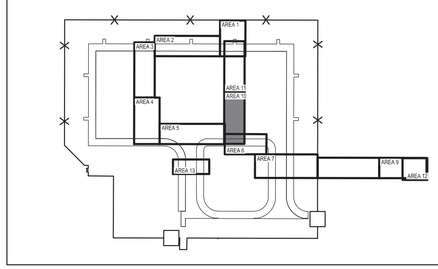

NAVFAC

STATE OF TEXAS
WILLIAM BATTEY
151640
PROFESSIONAL ENGINEER
01/20/2026
SEAL

Jacobs / BURNS McDONNELL
JACOBS/B&M, A JOINT VENTURE
1100 NORTH GLEBE ROAD
SUITE 500
ARLINGTON, VA 22201

A/E Contract No. N62742-20-D-0002
A/E Task Order No. N6274221F0315
JCG NO. 0343/0603
A/E INFO

APPROVED
FOR COMMANDER NAVFAC DATE 02/02/2026

ACTIVITY
AFI/MSC APPROVAL PER NAVFAC SAT-TO CHECKLIST

SATISFACTORY TO DATE 31 DEC 2025

DES:	WBB	DRW: CDS	REV: MSL
PM/DM			KKK
BRANCH MANAGER			SMK
CHIEF ENG/ARCH			SMK
FIRE PROTECTION			RO

DEPARTMENT OF THE NAVY
NAVAL FACILITIES ENGINEERING SYSTEMS COMMAND
NAVFAC PACIFIC
NAVAL FACILITIES ENGINEERING SYSTEMS COMMAND – PACIFIC
JOINT REGION MARIANAS (JRM)
ANDERSEN AIR FORCE BASE
GUAM

FY24 AJJY183012 (P-012),
PDI: NORTH AIRCRAFT PARKING RAMP

FUEL PLAN AND PROFILE - AREA 10

SCALE: AS SHOWN
EPROJECTS NO.: 1665555
CONSTR CONTROL NO.
NAVFAC DRAWING NO. 17361936
SHEET 313 OF 377

CF210

GRAPHIC SCALE
0 4' 8'
VERTICAL SCALE: 1" = 4'
0 10' 20' 40'
PLAN AND HORIZONTAL SCALE: 1" = 20'

NORTH ARROW
TRUE N

IF SHEET IS LESS THAN 22" X 34" REDUCED PRINT. USE GRAPHIC SCALES

REDESIGN FINAL SUBMITTAL

FILE NAME: Z:\Clients\ANF\USNavy\Poc\13097_GuamP012NAR\Design\Civil\Sheets\P012_13097CF201.dwg
LAYOUT NAME: CF210
PLOTTED: 01/14/2026 2:30pm
USER: zdsouba

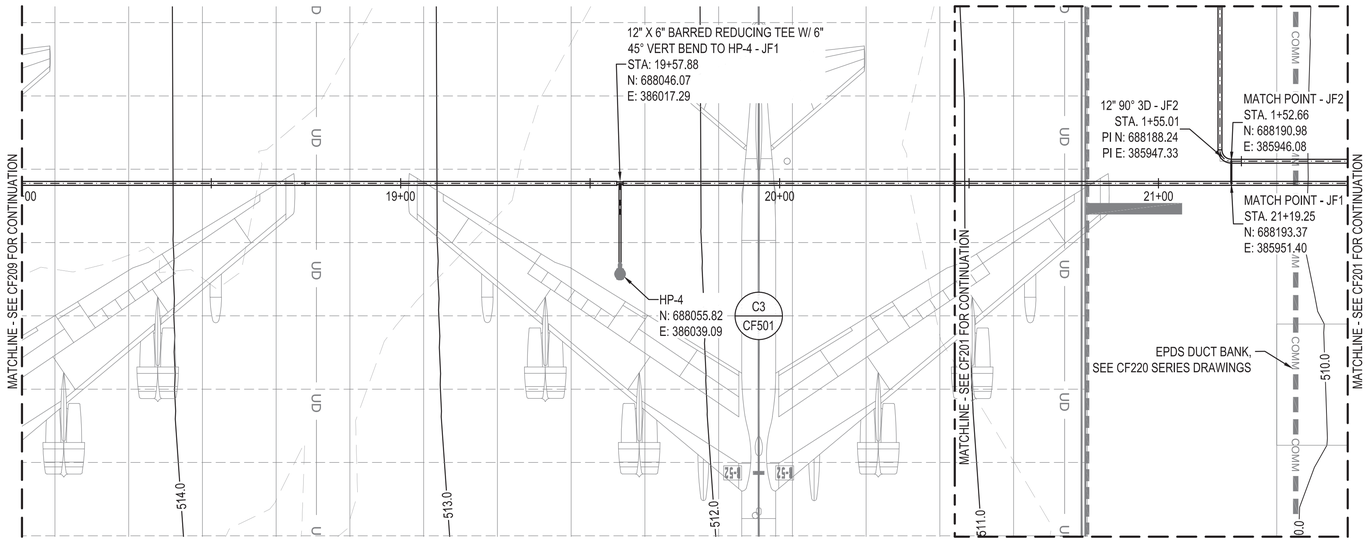

B1 AREA 11 ENLARGEMENT PLAN

SCALE: 1" = 20'

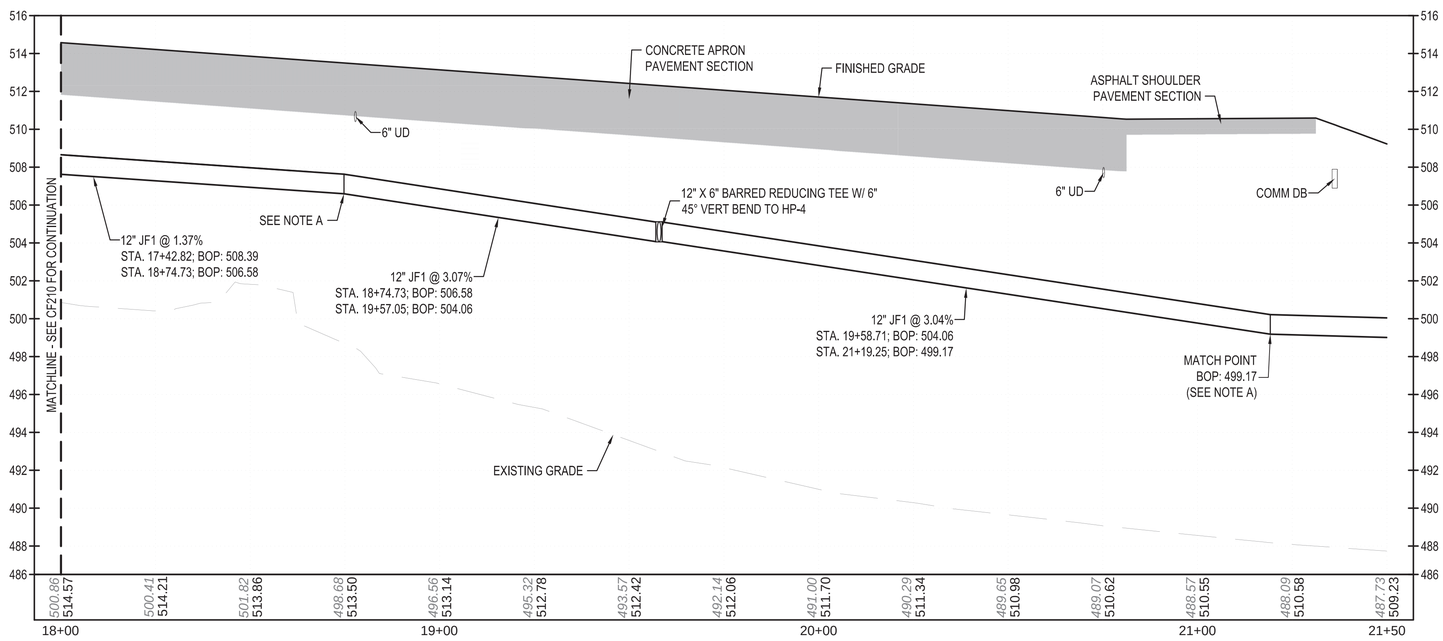

A1 JF1 PROFILE STA. 18+00 TO 21+50

VERTICAL SCALE: 1" = 4', HORIZONTAL SCALE: 1" = 20'

GENERAL NOTES

A VERTICAL ALIGNMENT TRANSITIONS MUST BE ACCOMPLISHED WITHOUT A MITERED WELD OR FITTING. EXCAVATE TO REQUIRED TRENCH DEPTH AND ALLOW PIPE TO BEND TO ACCOMPLISH THE VERTICAL TRANSITION. SLOPE MUST BE CONTINUOUS BETWEEN POINTS INDICATED. BENDING RADIUS MUST NOT EXCEED MAXIMUM ALLOWABLE IN ACCORDANCE WITH ASME B31.4.

LEGEND

W	WATER
SS	SANITARY SEWER
SD	STORM SEWER
F	FIRE WATER
UE	BURIED ELECTRICAL
JF	JET FUEL
25.0	CONTOUR
25.0	EXISTING CONTOUR
	ELECTRICAL/COMM MANHOLE
	TAXILANE LIGHTS

KEY PLAN

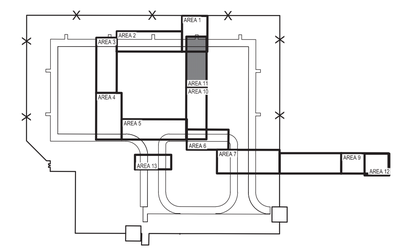

NAVFAC

STATE OF TEXAS
WILLIAM BATTEY
151640
PROFESSIONAL ENGINEER
01/20/2026
SEAL

Jacobs / BURNS McDONNELL
JACOBS/B&M, A JOINT VENTURE
1100 NORTH GLEBE ROAD
SUITE 500
ARLINGTON, VA 22201

A/E Contract No. N62742-20-D-0002
A/E Task Order No. N6274221F0315
JCG NO. 0343/0603

A/E INFO

APPROVED
FOR COMMANDER NAVFAC DATE 02/02/2026

ACTIVITY
AFIMSC APPROVAL PER NAVFAC SAT-TO CHECKLIST

SATISFACTORY TO DATE 31 DEC 2025

DES:	WBB	DRW: CDS	REV: MSL
PM/DM			KKK
BRANCH MANAGER			SMK
CHIEF ENG/ARCH			SMK
FIRE PROTECTION			RO

DEPARTMENT OF THE NAVY
NAVAL FACILITIES ENGINEERING SYSTEMS COMMAND
NAVFAC PACIFIC
NAVAL FACILITIES ENGINEERING SYSTEMS COMMAND ~ PACIFIC
JOINT REGION MARIANAS (JRM)
ANDERSEN AIR FORCE BASE
GUAM

FY24 AJJY183012 (P-012),
PDI: NORTH AIRCRAFT PARKING RAMP

FUEL PLAN AND PROFILE - AREA 11

SCALE: AS SHOWN
EPROJECTS NO.: 1665555
CONSTR CONTROL NO.
NAVFAC DRAWING NO. 17361937
SHEET 314 OF 377

CF211

REDESIGN FINAL SUBMITTAL

GRAPHIC SCALE

0 4' 8'
VERTICAL SCALE: 1" = 4'
0 10' 20' 40'
PLAN AND HORIZONTAL SCALE: 1" = 20'

NORTH ARROW
TRUE N

IF SHEET IS LESS THAN 22" X 34"
REDUCED PRINT. USE GRAPHIC SCALES

FILE NAME: Z:\Clients\ANF\USNavy\Pac\133097_GuamP012NAR\Design\Civil\Sheets\P012_133097CF201.dwg
LAYOUT NAME: CF211
PLOTTED: 01/14/2026 2:30pm
USER: zdsuba

GENERAL NOTES

A	FIELD VERIFY ELEVATION AND LOCATION OF EXISTING 14" PIPE AT TIE IN LOCATIONS PRIOR TO BEGINNING WORK.
B	DEMOLISH EXISTING 14" PIPE BETWEEN TIE IN LOCATIONS. USE SOFT DIG METHODS FOR EXCAVATION AND EXERCISE CAUTION IN THE VICINITY OF ADJACENT 14" PIPE. REFER TO SECTION 33 08 53 REGARDING TIE IN REQUIREMENTS.

LEGEND

W	WATER
SS	SANITARY SEWER
SD	STORM SEWER
F	FIRE WATER
UE	UNDERGROUND ELECTRICAL
JF	JET FUEL
25.0	CONTOUR
25.0	EXISTING CONTOUR
	ELECTRICAL/COMM MANHOLE
	TAXILANE LIGHTS
TS-#	CATHODIC PROTECTION TEST STATION (C4 / EK501)
	CONCRETE WALK (C4 / CF502)

KEY PLAN

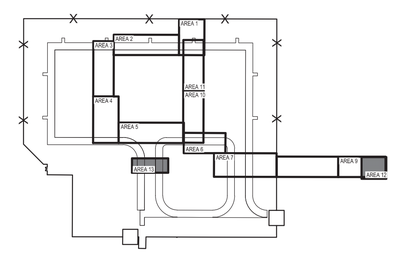

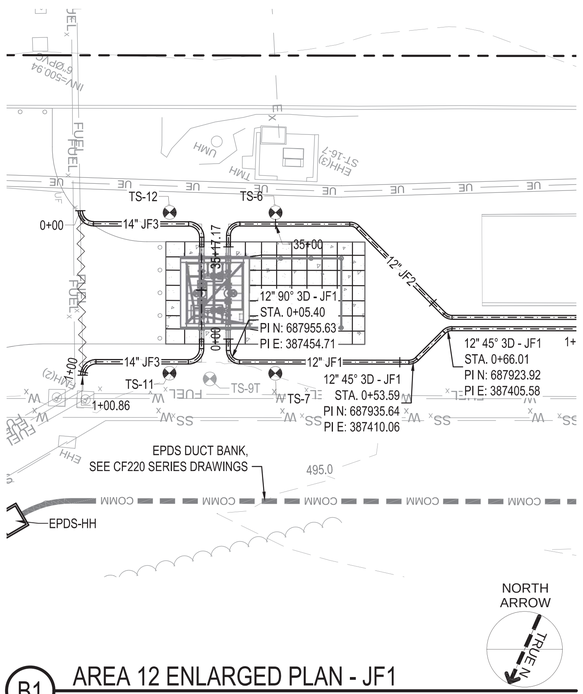

B1 AREA 12 ENLARGED PLAN - JF1
SCALE: 1" = 20'

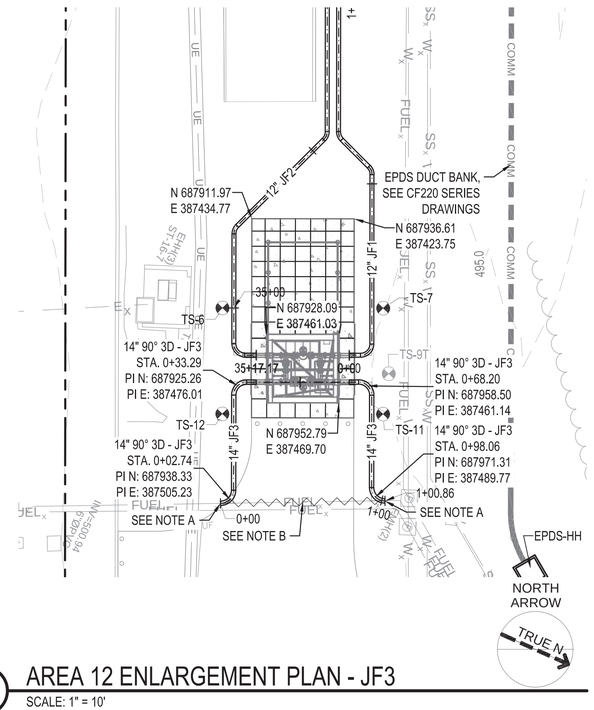

B2 AREA 12 ENLARGEMENT PLAN - JF3
SCALE: 1" = 10'

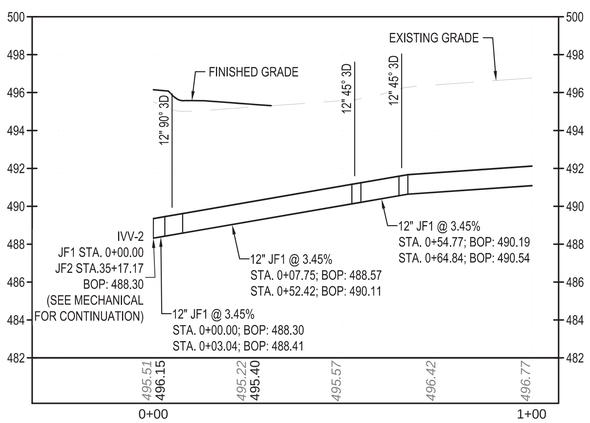

A1 JF1 PROFILE STA. 0+00 TO 1+00
SCALE: 1" = 20'

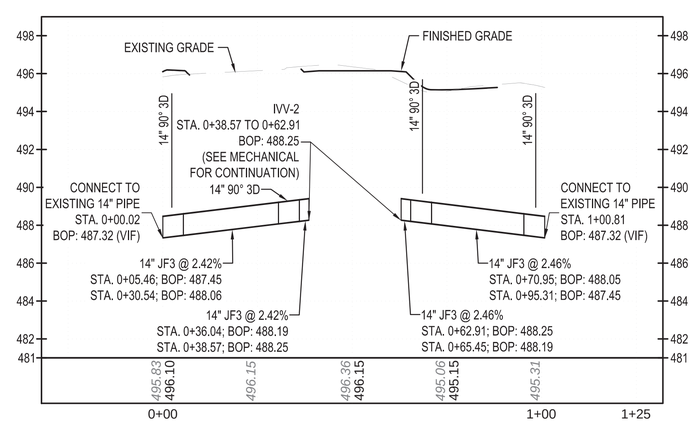

A2 JF3 PROFILE
SCALE: 1" = 10'

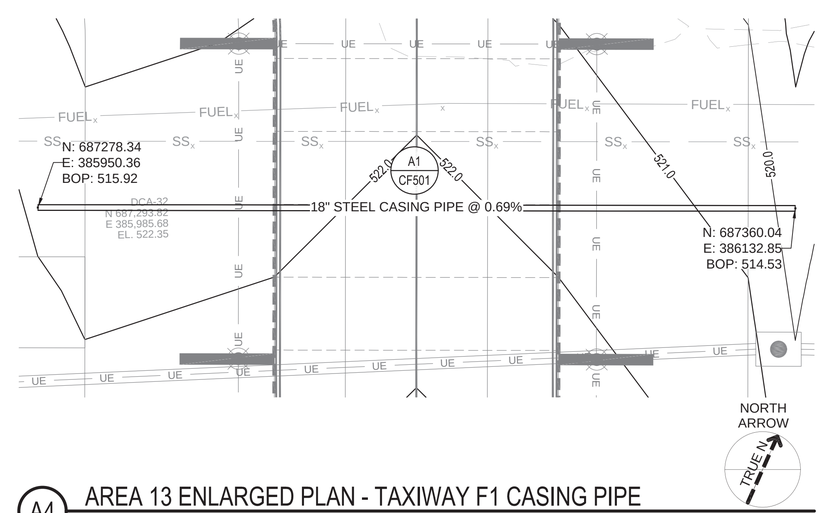

A4 AREA 13 ENLARGED PLAN - TAXIWAY F1 CASING PIPE
SCALE: 1" = 20'

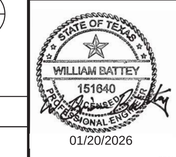

01/20/2026
SEAL

Jacobs / BURNS McDONNELL
JACOBS/B&M, A JOINT VENTURE
1100 NORTH GLEBE ROAD
SUITE 500
ARLINGTON, VA 22201

A/E Contract No. N62742-20-D-0002
A/E Task Order No. N6274221F0315
JCG NO. 1334360003
A/E INFO

APPROVED
FOR COMMANDER NAVFAC DATE 02/02/2026

ACTIVITY
AFIMSC APPROVAL PER NAVFAC SAT-TO CHECKLIST

SATISFACTORY TO DATE 31 DEC 2025

DES:	DRW: CDS	REV:	MSL
PM/DM			KKK
BRANCH MANAGER HBE			SMK
CHIEF ENG/ARCH			SMK
FIRE PROTECTION			RO

DEPARTMENT OF THE NAVY
NAVAL FACILITIES ENGINEERING SYSTEMS COMMAND
NAVFAC PACIFIC
ANDERSEN AIR FORCE BASE

NAVAL FACILITIES ENGINEERING SYSTEMS COMMAND
JOINT REGION MARIANAS (JRM)
GUAM

FY24 AUY183012 (P-012),
PDI: NORTH AIRCRAFT PARKING RAMP

FUEL PLAN AND PROFILE - AREA 12

SCALE: AS SHOWN
EPROJECTS NO.: 1665555
CONSTR CONTROL NO.
NAVFAC DRAWING NO. 17361938
SHEET 315 OF 377

CF212

REDESIGN FINAL SUBMITTAL

IF SHEET IS LESS THAN 22" X 34"
REDUCED PRINT. USE GRAPHIC SCALES

FILE NAME: Z:\Clients\ANF\USNavy\Poc\133097_GuamP012NAR\Design\Civil\Sheets\P012_133097CF201.dwg
LAYOUT NAME: CF212
PLOTTED: 01/14/2026 2:31pm
USER: cdsoulo

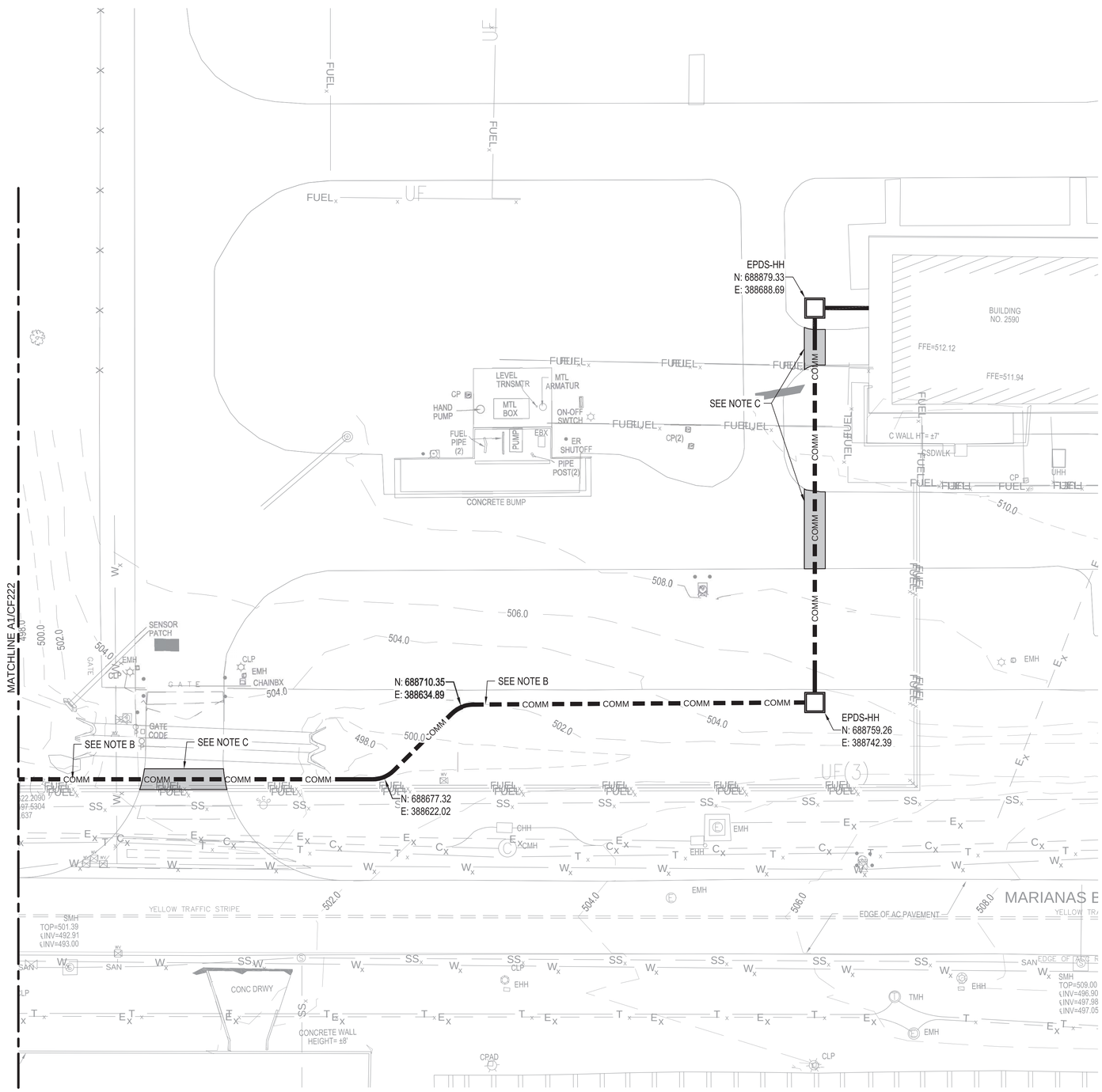

A1 COMM PLAN - AREA 1

SCALE: 1" = 20'

GENERAL NOTES

A	COORDINATE POINTS ARE APPROXIMATE. FIELD VERIFY ROUTE WITH EXISTING CONDITIONS. SEE GENERAL DUCTBANK INSTALLATION NOTES ON CF102.
B	IF DISTURBED FOR DUCTBANK INSTALLATION, RESTORE TOP OF EXISTING EMBANKMENT.
C	REMOVE AND PROVIDE ASPHALT PAVEMENT TO ACCOMMODATE DUCTBANK INSTALLATION. SEE DETAIL C3 ON CS501.

LEGEND

W	WATER
SS	SANITARY SEWER
SD	STORM SEWER
F	FIRE WATER
UE	BURIED ELECTRICAL
UD	UNDERDRAIN
FUEL	JET FUEL
COMM	COMM LINE
	ELECTRICAL/COMM MANHOLE
	TAXILANE LIGHTS
	EPDS HANDHOLE
E	EPDS STATION

KEY PLAN

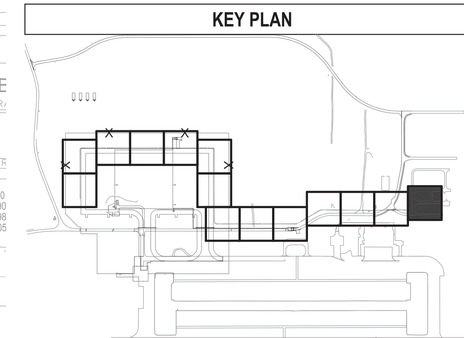

GRAPHIC SCALE

0 20 40

SCALE: 1:20

NORTH ARROW

TRUE N

NAVFAC

STATE OF TEXAS
WILLIAM BATTEY
151640
REGISTERED PROFESSIONAL ENGINEER
01/20/2026
SEAL

Jacobs / BURNS McDONNELL

JACOBS/B&M, A JOINT VENTURE
1100 NORTH GLEBE ROAD
SUITE 500
ARLINGTON, VA 22201

A/E Contract No. N62742-20-D-0002
A/E Task Order No. N6274221F0315
JCG NO. D3430603

A/E INFO

APPROVED

FOR COMMANDER NAVFAC DATE 02/02/2026

ACTIVITY
AFIMSC APPROVAL PER NAVFAC SAT-TO CHECKLIST

SATISFACTORY TO DATE 31 DEC 2025

DES:	WBB	DRW: CDS	REV: MSL
PM/DM			KKK
BRANCH MANAGER			SMK
CHIEF ENG/ARCH			SMK
FIRE PROTECTION			RO

DEPARTMENT OF THE NAVY
NAVAL FACILITIES ENGINEERING SYSTEMS COMMAND
NAVFAC PACIFIC
NAVAL FACILITIES ENGINEERING SYSTEMS COMMAND – PACIFIC
JOINT REGION MARIANAS (JRM)
ANDERSEN AIR FORCE BASE
GUAM

FY24 AJJY183012 (P-012),
PDI: NORTH AIRCRAFT PARKING RAMP

COMM PLAN - AREA 1

SCALE: AS SHOWN
EPROJECTS NO.: 1665555
CONSTR CONTROL NO.
NAVFAC DRAWING NO. 17361939
SHEET 316 OF 377

CF221

REDESIGN FINAL SUBMITTAL

IF SHEET IS LESS THAN 22" X 34" REDUCED PRINT. USE GRAPHIC SCALES

FILE NAME: Z:\Clients\ANF\USNavy\Poc\133097_GuamP012NAR\Design\Civil\Sheets\P012_133097_CF221-CF233.dwg
LAYOUT NAME: CF221
PLOTTED: 01/14/2026 2:32pm
USER: cdsoubs

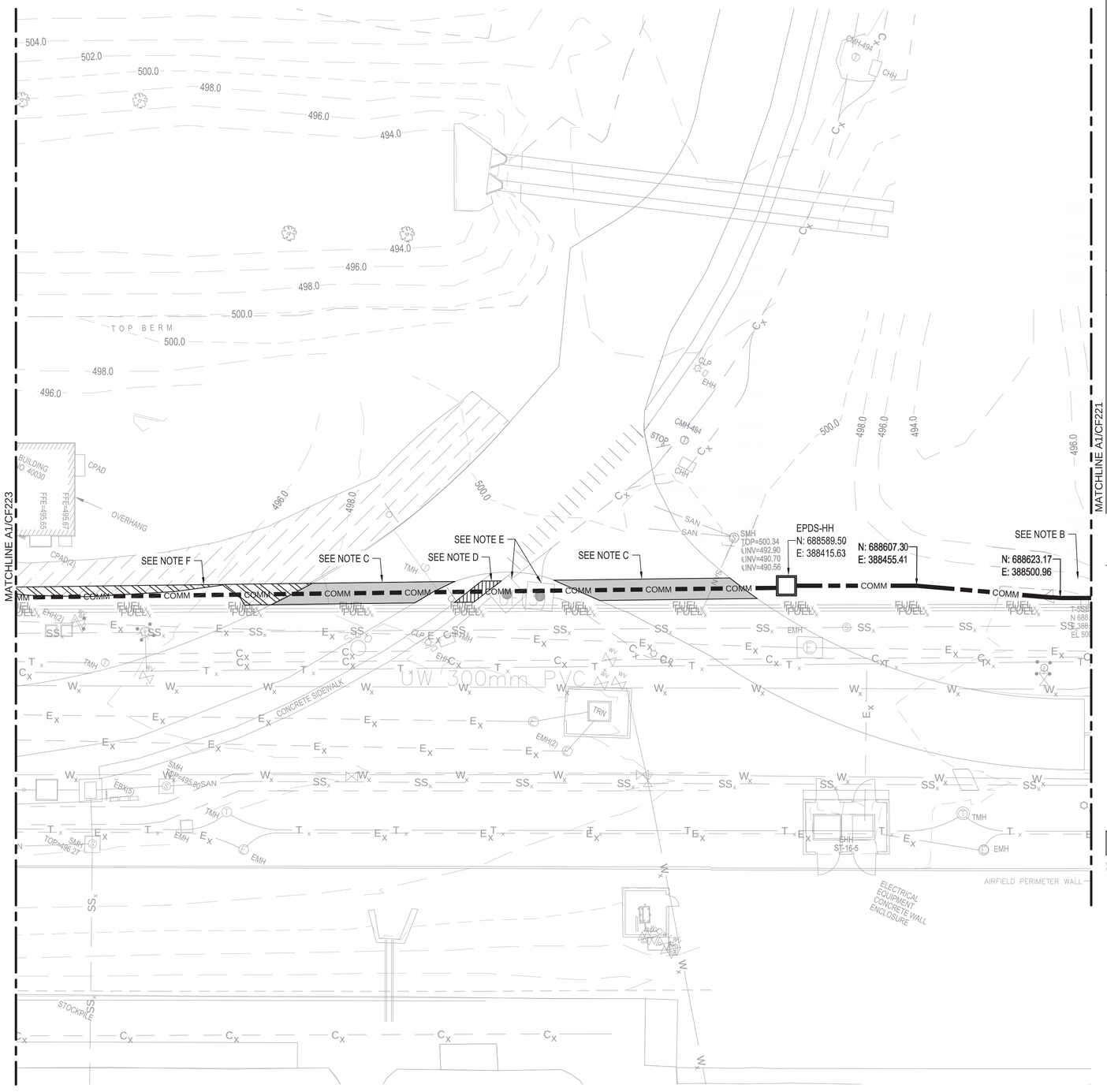

A1 COMM PLAN- AREA 2

SCALE: 1" = 20'

GENERAL NOTES

A	COORDINATE POINTS ARE APPROXIMATE. FIELD VERIFY ROUTE WITH EXISTING CONDITIONS. SEE GENERAL DUCTBANK INSTALLATION NOTES ON CF102.
B	IF DISTURBED FOR DUCTBANK INSTALLATION, RESTORE TOP OF EMBANKMENT.
C	REMOVE AND PROVIDE ASPHALT PAVEMENT TO ACCOMMODATE DUCTBANK INSTALLATION. SEE DETAIL C3 ON CS501.
D	REMOVE AND PROVIDE SIDEWALK TO ACCOMMODATE DUCTBANK INSTALLATION. REPLACE TO NEAREST EXISTING JOINT.
E	EXISTING UTILITIES SHOWN ARE FROM SURVEY AND AVAILABLE BASEMAP INFORMATION. EXISTING ELEC/COMM STRUCTURES SHOWN AT THIS LOCATION WERE NOT OBSERVED ON SITE. FIELD VERIFY LOCATION OF EXISTING SITE FEATURES AND UTILITY STRUCTURES AND NOTIFY ENGINEER OF DISCREPANCIES PRIOR TO BEGINNING WORK.
F	REMOVE AND PROVIDE AGGREGATE DRIVEWAY SURFACING. COMPACT SUBGRADE AS PAVEMENT SUBGRADE IN ACCORDANCE WITH SPECIFICATIONS.

LEGEND

W	WATER
SS	SANITARY SEWER
SD	STORM SEWER
F	FIRE WATER
UE	BURIED ELECTRICAL
UD	UNDERDRAIN
FUEL	JET FUEL
COMM	COMM LINE
	ELECTRICAL/COMM MANHOLE
	TAXILANE LIGHTS
	EPDS HANDHOLE
E	EPDS STATION

KEY PLAN

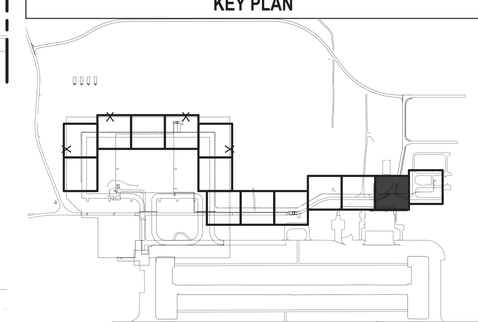

GRAPHIC SCALE

0 20 40

SCALE: 1:20

NORTH ARROW

TRUE N

NAVFAC

STATE OF TEXAS
WILLIAM BATTEY
151640
REGISTERED PROFESSIONAL ENGINEER
01/20/2026

SEAL

Jacobs / BURNS McDONNELL

JACOBS/B&M, A JOINT VENTURE
1100 NORTH GLEBE ROAD
SUITE 500
ARLINGTON, VA 22201

A/E Contract No. N62742-20-D-0002
A/E Task Order No. N6274221F0315
JCG NO. 0343803

A/E INFO

APPROVED

FOR COMMANDER NAVFAC DATE 02/02/2026

ACTIVITY
AFIMSC APPROVAL PER NAVFAC SAT-TO CHECKLIST

SATISFACTORY TO DATE 31 DEC 2025

DES:	WBB	DRW:	CDS	REV:	MSL
PM/DM					KKK
BRANCH MANAGER					SMK
CHIEF ENG/ARCH					SMK
FIRE PROTECTION					RO

DEPARTMENT OF THE NAVY
NAVFAC PACIFIC
NAVAL FACILITIES ENGINEERING SYSTEMS COMMAND
NAVAL FACILITIES ENGINEERING SYSTEMS COMMAND – PACIFIC
ANDERSEN AIR FORCE BASE
JOINT REGION MARIANAS (JRM)
GUAM

FY24 AJJY183012 (P-012)
PDI: NORTH AIRCRAFT PARKING RAMP

COMM PLAN- AREA 2

SCALE:	AS SHOWN
EPROJECTS NO.:	1665555
CONSTR CONTROL NO.	
NAVFAC DRAWING NO.	17361940
SHEET	317 OF 377

CF222

REDESIGN FINAL SUBMITTAL

IF SHEET IS LESS THAN 22" X 34" REDUCED PRINT. USE GRAPHIC SCALES

FILE NAME: Z:\Clients\ANF\USNavy\Pac\133097_GuamP012NAR\Design\Civil\Sheets\P012_133097_CF221-CF233.dwg
LAYOUT NAME: CF222
PLOTTED: 01/14/2026 2:32pm
USER: cdsuba

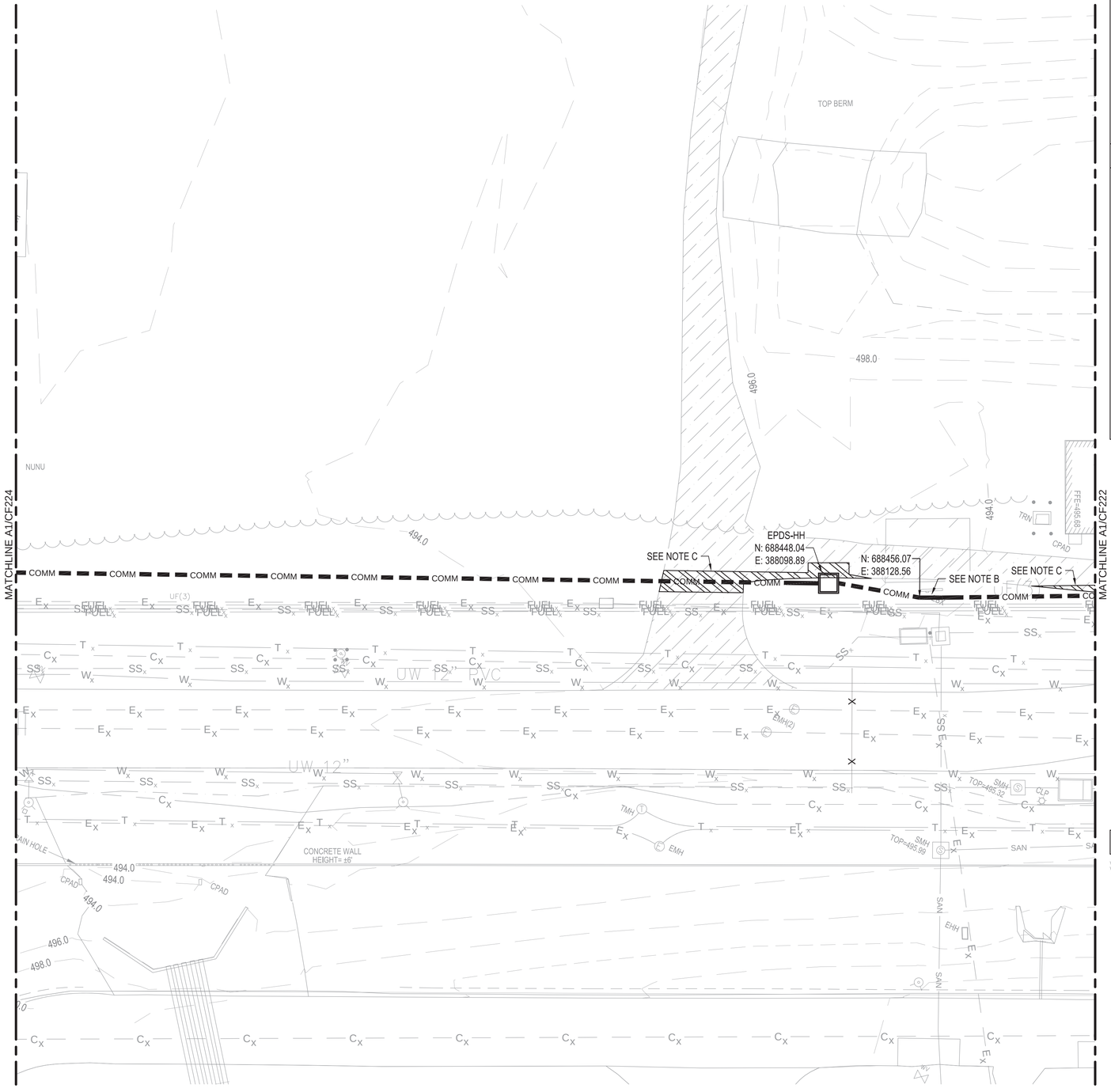

A1 COMM PLAN - AREA 3

SCALE: 1" = 20'

GENERAL NOTES

A	COORDINATE POINTS ARE APPROXIMATE. FIELD VERIFY ROUTE WITH EXISTING CONDITIONS. SEE GENERAL DUCTBANK INSTALLATION NOTES ON CF102.
B	FIELD VERIFY WHETHER ROUTING BETWEEN EXISTING WALL AND BURIED FUEL LINE IS FEASIBLE. COORDINATE WITH CONTRACTING OFFICER TO DETERMINE IF ALTERNATE ROUTING IS PREFERRED.
C	REMOVE AND PROVIDE AGGREGATE DRIVEWAY SURFACING. COMPACT SUBGRADE AS PAVEMENT SUBGRADE IN ACCORDANCE WITH SPECIFICATIONS.

LEGEND

W	WATER
SS	SANITARY SEWER
SD	STORM SEWER
F	FIRE WATER
UE	BURIED ELECTRICAL
UD	UNDERDRAIN
FUEL	JET FUEL
COMM	COMM LINE
	ELECTRICAL/COMM MANHOLE
	TAXILANE LIGHTS
	EPDS HANDHOLE
E	EPDS STATION

KEY PLAN

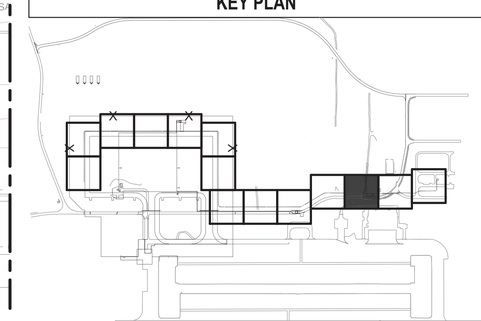

GRAPHIC SCALE

0 20 40

SCALE: 1:20

NORTH ARROW

TRUE N

NAVFAC

STATE OF TEXAS
WILLIAM BATTEY
151640
REGISTERED PROFESSIONAL ENGINEER
01/20/2026

SEAL

Jacobs / BURNS McDONNELL

JACOBS/B&M, A JOINT VENTURE
1100 NORTH GLEBE ROAD
SUITE 500
ARLINGTON, VA 22201

A/E Contract No. N62742-20-D-0002
A/E Task Order No. N6274221F0315
JCG NO. 0343/0603

A/E INFO

APPROVED

FOR COMMANDER NAVFAC DATE 02/02/2026

ACTIVITY
AFIMSC APPROVAL PER NAVFAC SAT-TO CHECKLIST

SATISFACTORY TO DATE 31 DEC 2025

DES:	WBB	DRW:	CDS	REV:	MSL
PM/DM					KKK
BRANCH MANAGER					SMK
CHIEF ENG/ARCH					SMK
FIRE PROTECTION					RO

DEPARTMENT OF THE NAVY
NAVFAC PACIFIC
NAVAL FACILITIES ENGINEERING SYSTEMS COMMAND
NAVAL FACILITIES ENGINEERING SYSTEMS COMMAND ~ PACIFIC
ANDERSEN AIR FORCE BASE
JOINT REGION MARIANAS (JRM)
GUAM

FY24 AJJY183012 (P-012),
PDI: NORTH AIRCRAFT PARKING RAMP

COMM PLAN - AREA 3

SCALE: AS SHOWN
EPROJECTS NO.: 1665555
CONSTR CONTROL NO.
NAVFAC DRAWING NO. 17361941
SHEET 318 OF 377

CF223

REDESIGN FINAL SUBMITTAL

IF SHEET IS LESS THAN 22" X 34" REDUCED PRINT. USE GRAPHIC SCALES

FILE NAME: Z:\Clients\ANF\USNavy\Poc\133097_GuamP012NAR\Design\Civil\Sheets\P012_133097_CF221-CF233.dwg
LAYOUT NAME: CF223
PLOTTED: 01/14/2026 2:33pm
USER: cdsuba

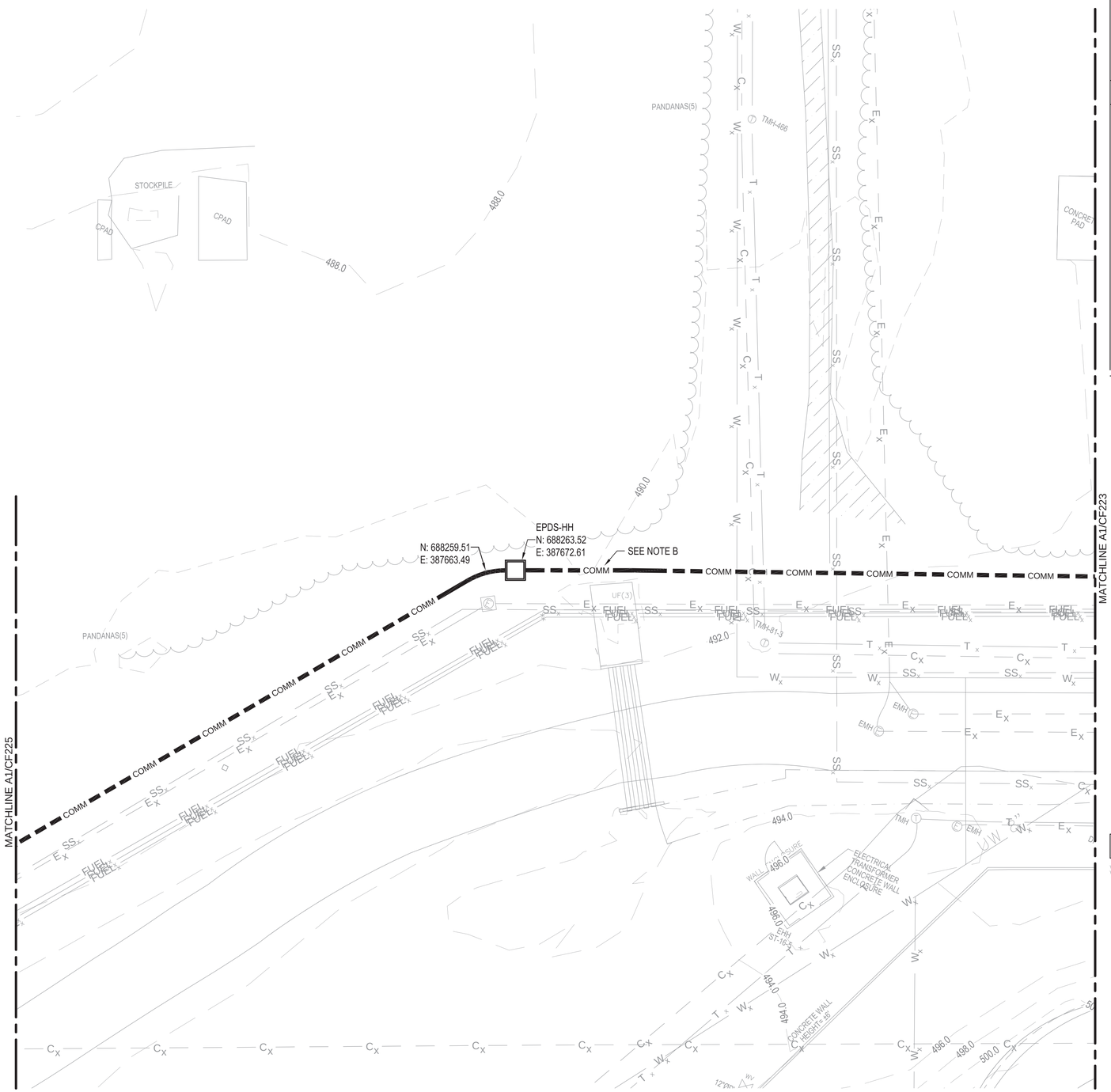

A1 COMM PLAN - AREA 4

SCALE: 1" = 20'

GENERAL NOTES

A	COORDINATE POINTS ARE APPROXIMATE. FIELD VERIFY ROUTE WITH EXISTING CONDITIONS. SEE GENERAL DUCTBANK INSTALLATION NOTES ON CF102.
B	RESTORE DRAINAGE CHANNEL SURFACE MATERIAL AND PROFILE FOLLOWING DUCT BANK INSTALLATION. DO NOT DISTURB EXISTING CONCRETE DRAINAGE APRON.

LEGEND

W	WATER
SS	SANITARY SEWER
SD	STORM SEWER
F	FIRE WATER
UE	BURIED ELECTRICAL
UD	UNDERDRAIN
FUEL	JET FUEL
COMM	COMM LINE
	ELECTRICAL/COMM MANHOLE
	TAXILANE LIGHTS
	EPDS HANDHOLE
E	EPDS STATION

KEY PLAN

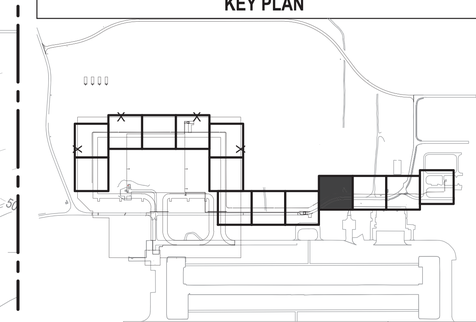

GRAPHIC SCALE

0 20 40

SCALE: 1:20

NORTH ARROW

TRUE N

NAVFAC

STATE OF TEXAS
WILLIAM BATTEY
151640
PROFESSIONAL ENGINEER
01/20/2026

SEAL

Jacobs / BURNS McDONNELL

JACOBS/B&M, A JOINT VENTURE
1100 NORTH GLEBE ROAD
SUITE 500
ARLINGTON, VA 22201

A/E Contract No. N62742-20-D-0002
A/E Task Order No. N62742-21F0315
JCG NO. 034306603

A/E INFO

APPROVED

FOR COMMANDER NAVFAC DATE 02/02/2026

ACTIVITY
AFIMSC APPROVAL PER NAVFAC SAT-TO CHECKLIST

SATISFACTORY TO DATE 31 DEC 2025

DES:	WBB	DRW:	CDS	REV:	MSL
PM/DM					KKK
BRANCH MANAGER					SMK
CHIEF ENG/ARCH					SMK
FIRE PROTECTION					RO

DEPARTMENT OF THE NAVY
NAVAL FACILITIES ENGINEERING SYSTEMS COMMAND
NAVFAC PACIFIC
NAVAL FACILITIES ENGINEERING SYSTEMS COMMAND – PACIFIC
JOINT REGION MARIANAS (JRM)
ANDERSEN AIR FORCE BASE
GUAM

FY24 AJJY183012 (P-012),
PDI: NORTH AIRCRAFT PARKING RAMP

COMM PLAN - AREA 4

SCALE: AS SHOWN

EPROJECTS NO.: 1665555

CONSTR CONTROL NO.

NAVFAC DRAWING NO. 17361942

SHEET 319 OF 377

CF224

REDESIGN FINAL SUBMITTAL

IF SHEET IS LESS THAN 22" X 34"
REDUCED PRINT. USE GRAPHIC SCALES

FILE NAME: Z:\Clients\ANF\USNavy\Poc\133097_GuamP012NAR\Design\Civil\Sheets\P012_133097_CF221-CF233.dwg
LAYOUT NAME: CF224
PLOTTED: 01/14/2026 2:33pm
USER: cdsubs

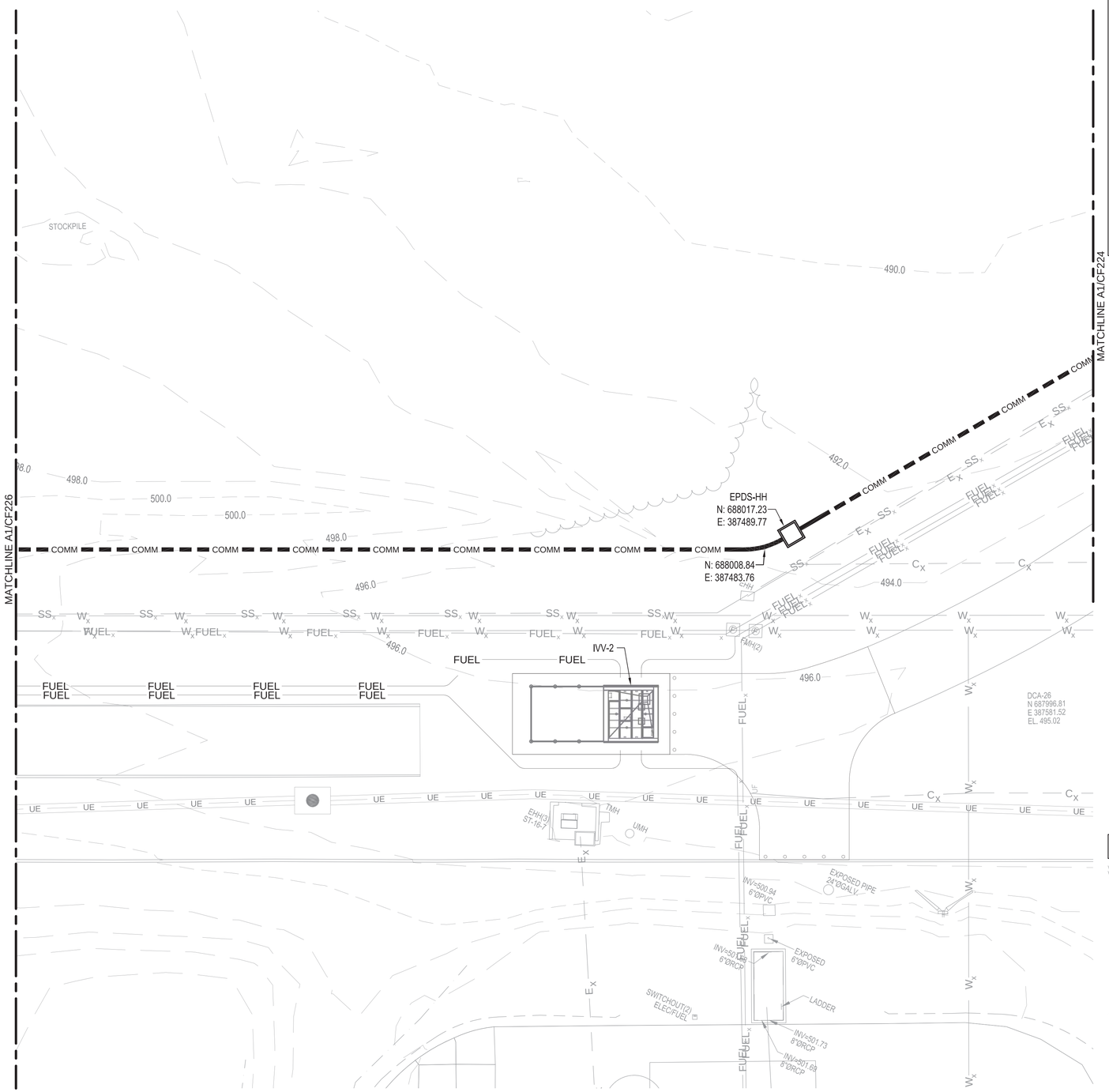

A1 COMM PLAN - AREA 5

SCALE: 1" = 20'

LEGEND

W	WATER
SS	SANITARY SEWER
SD	STORM SEWER
F	FIRE WATER
UE	BURIED ELECTRICAL
UD	UNDERDRAIN
FUEL	JET FUEL
COMM	COMM LINE
	ELECTRICAL/COMM MANHOLE
	TAXILANE LIGHTS
	EPDS HANDHOLE
E	EPDS STATION

KEY PLAN

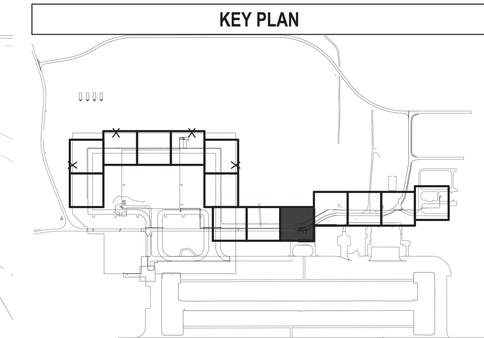

GRAPHIC SCALE

0 20 40

SCALE: 1:20

NORTH ARROW

TRUE N

NAVFAC

STATE OF TEXAS
WILLIAM BATTEY
151640
REGISTERED PROFESSIONAL ENGINEER
01/20/2026
SEAL

Jacobs / BURNS McDONNELL

JACOBS/B&M, A JOINT VENTURE
1100 NORTH GLEBE ROAD
SUITE 500
ARLINGTON, VA 22201

A/E Contract No. N62742-20-D-0002
A/E Task Order No. N6274221F0315
JCG NO. 0343/0603

A/E INFO

APPROVED

FOR COMMANDER NAVFAC DATE 02/02/2026

ACTIVITY

AFIMSC APPROVAL PER NAVFAC SAT-TO CHECKLIST

SATISFACTORY TO DATE 31 DEC 2025

DES:	WBB	DRW:	CDS	REV:	MSL

PM/DM	KKK
BRANCH MANAGER	SMK
CHIEF ENG/ARCH	SMK
FIRE PROTECTION	RO

DEPARTMENT OF THE NAVY
NAVFAC PACIFIC
NAVAL FACILITIES ENGINEERING SYSTEMS COMMAND
NAVAL FACILITIES ENGINEERING SYSTEMS COMMAND – PACIFIC
JOINT REGION MARIANAS (JRM)
ANDERSEN AIR FORCE BASE
GUAM

FY24 AJJY183012 (P-012),
PDI: NORTH AIRCRAFT PARKING RAMP

COMM PLAN - AREA 5

SCALE:	AS SHOWN
EPROJECTS NO.:	1665555
CONSTR CONTROL NO.	
NAVFAC DRAWING NO.	17361943
SHEET	320 OF 377

CF225

REDESIGN FINAL SUBMITTAL

IF SHEET IS LESS THAN 22" X 34"
REDUCED PRINT. USE GRAPHIC SCALES

FILE NAME: Z:\Clients\ANF\USNavy\Poc\133097_GuamP012NAR\Design\Civil\Sheets\P012_133097_CF221-CF233.dwg
LAYOUT NAME: CF225
PLOTTED: 01/14/2026 2:33pm
USER: zdsubo

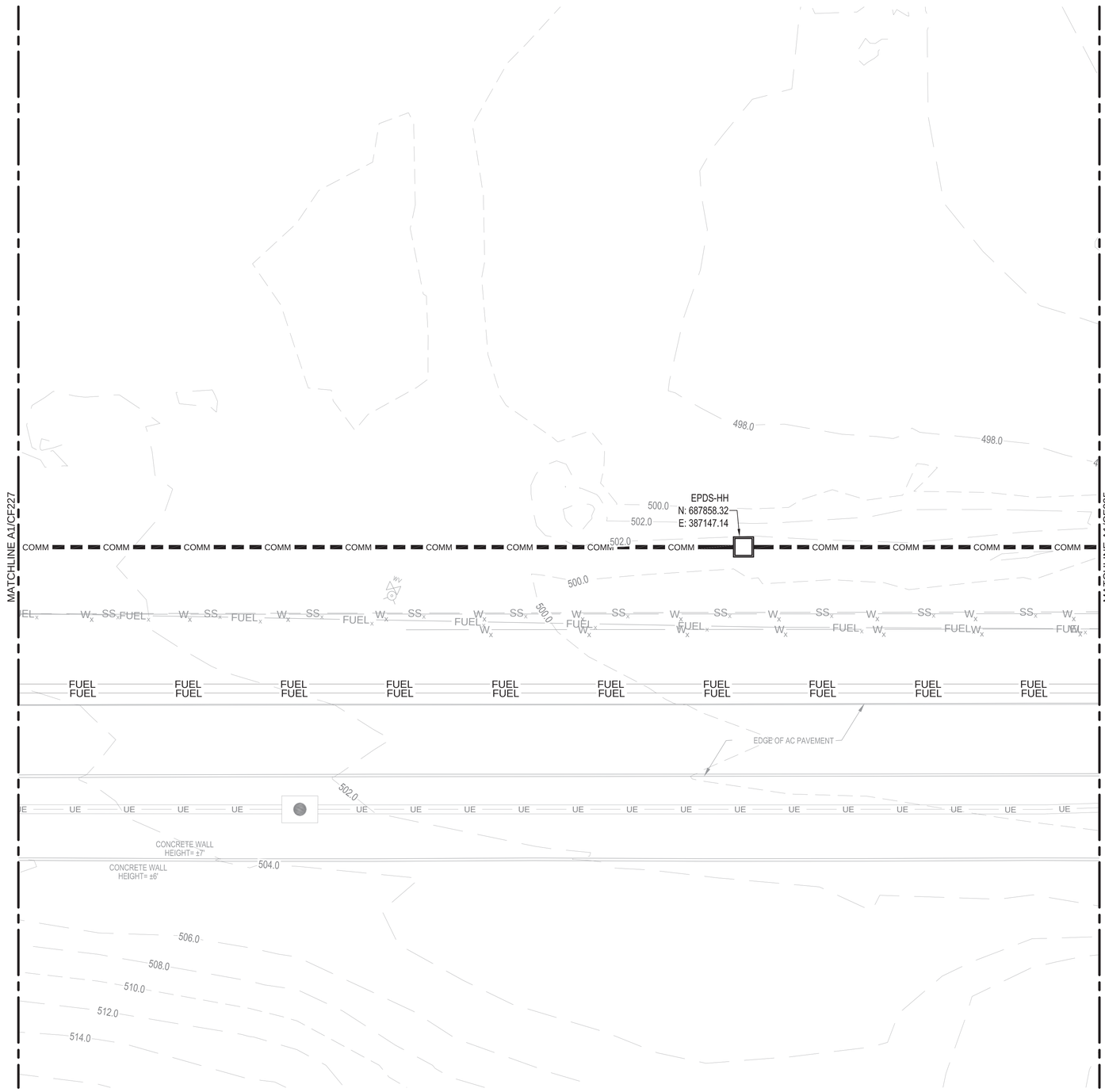

A1 COMM PLAN - AREA 6

SCALE: 1" = 20'

GENERAL NOTES

A	COORDINATE POINTS ARE APPROXIMATE. FIELD VERIFY ROUTE WITH EXISTING CONDITIONS. SEE GENERAL DUCTBANK INSTALLATION NOTES ON CF102.
B	REMOVE AND PROVIDE AGGREGATE DRIVEWAY SURFACING. COMPACT SUGRADE AS PAVEMENT SUBGRADE IN ACCORDANCE WITH SPECIFICATIONS.

LEGEND

W	WATER
SS	SANITARY SEWER
SD	STORM SEWER
F	FIRE WATER
UE	BURIED ELECTRICAL
UD	UNDERDRAIN
FUEL	JET FUEL
COMM	COMM LINE
	ELECTRICAL/COMM MANHOLE
	TAXILANE LIGHTS
	EPDS HANDHOLE
E	EPDS STATION

KEY PLAN

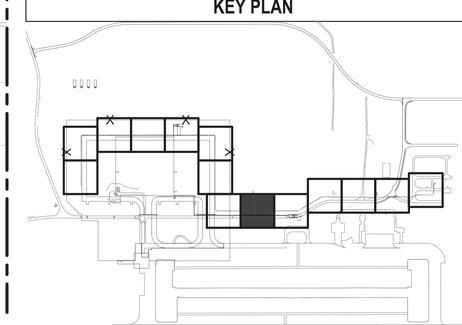

GRAPHIC SCALE

0 20 40

SCALE: 1:20

NORTH ARROW

TRUE N

STATE OF TEXAS
WILLIAM BATTEY
151640
REGISTERED PROFESSIONAL ENGINEER
01/20/2026

SEAL

Jacobs / BURNS McDONNELL

JACOBS/B&M, A JOINT VENTURE
1100 NORTH GLEBE ROAD
SUITE 500
ARLINGTON, VA 22201

A/E Contract No. N62742-20-D-0002
A/E Task Order No. N6274221F0315
JCG NO. 0343/0603

A/E INFO

APPROVED

FOR COMMANDER NAVFAC DATE 02/02/2026

ACTIVITY
AFIMSC APPROVAL PER NAVFAC SAT-TO CHECKLIST

SATISFACTORY TO DATE 31 DEC 2025

DES:	WBB	DRW: CDS	REV: MSL
PM/DM			KKK
BRANCH MANAGER			SMK
CHIEF ENG/ARCH			SMK
FIRE PROTECTION			RO

DEPARTMENT OF THE NAVY
NAVFAC PACIFIC
NAVAL FACILITIES ENGINEERING SYSTEMS COMMAND
NAVAL FACILITIES ENGINEERING SYSTEMS COMMAND – PACIFIC
JOINT REGION MARIANAS (JRM)
ANDERSEN AIR FORCE BASE
GUAM

FY24 AJJY183012 (P-012),
PDI: NORTH AIRCRAFT PARKING RAMP

COMM PLAN - AREA 6

SCALE: AS SHOWN

EPROJECTS NO.: 1665555

CONSTR CONTROL NO.

NAVFAC DRAWING NO.
17361944

SHEET 321 OF 377

CF226

REDESIGN FINAL SUBMITTAL

IF SHEET IS LESS THAN 22" X 34"
REDUCED PRINT. USE GRAPHIC SCALES

FILE NAME: Z:\Clients\ANF\USNavy\Poc\133097_GuamP012NAR\Design\Civil\Sheets\P012_133097_CF221-CF233.dwg
LAYOUT NAME: CF226
PLOTTED: 01/14/2026 2:33pm
USER: cdsouba

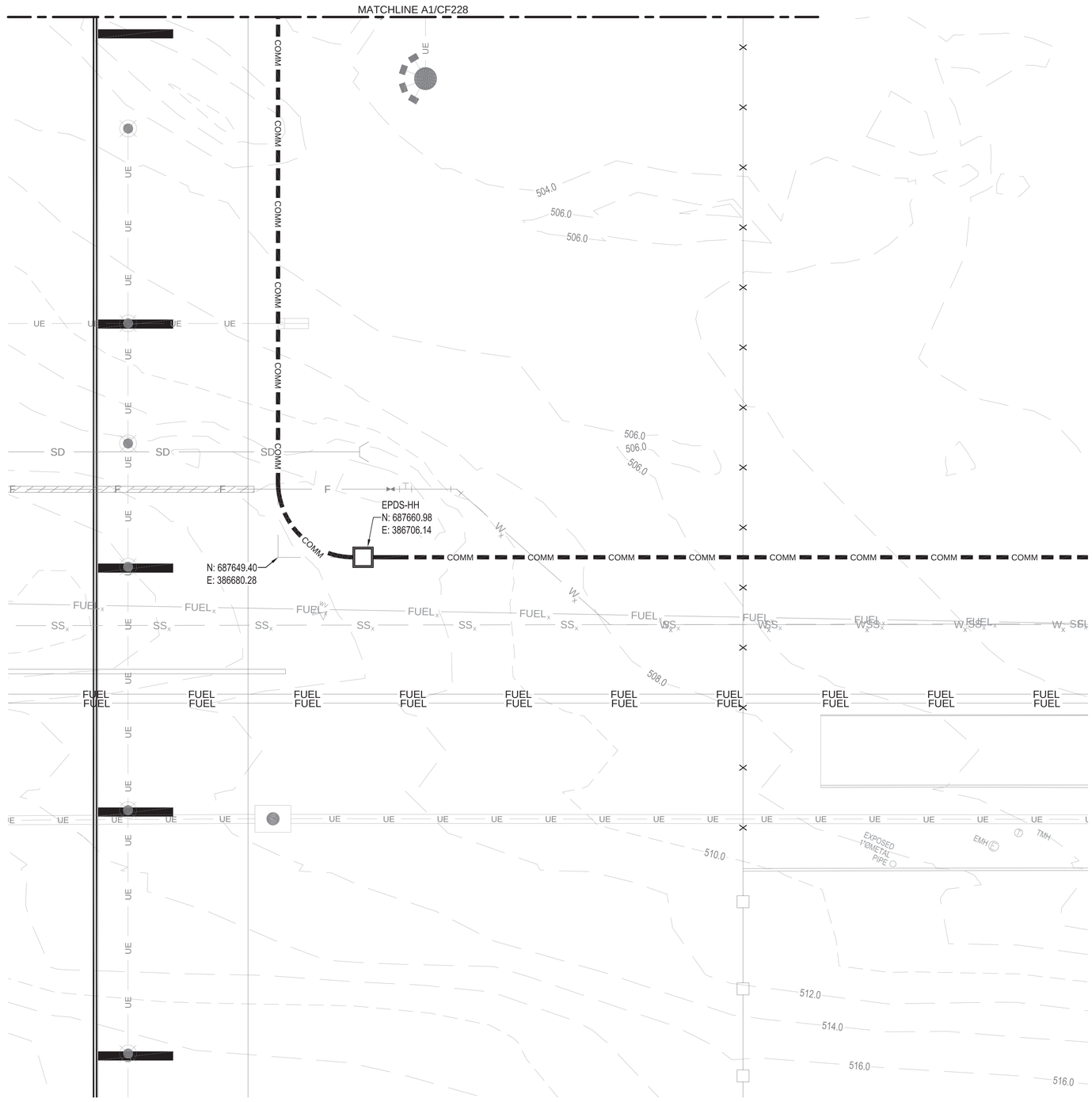

LEGEND

W	WATER
SS	SANITARY SEWER
SD	STORM SEWER
F	FIRE WATER
UE	BURIED ELECTRICAL
UD	UNDERDRAIN
FUEL	JET FUEL
COMM	COMM LINE
	ELECTRICAL/COMM MANHOLE
	TAXILANE LIGHTS
	EPDS HANDHOLE
E	EPDS STATION

KEY PLAN

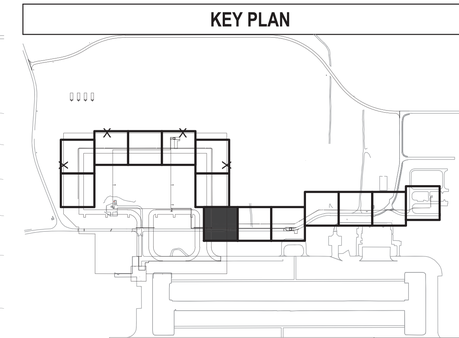

A1 COMM PLAN - AREA 7

SCALE: 1" = 20'

GRAPHIC SCALE

0 20 40

SCALE: 1:20

NORTH ARROW

TRUE N

NAVFAC

STATE OF TEXAS
WILLIAM BATTEY
151640
PROFESSIONAL ENGINEER
01/20/2026
SEAL

Jacobs / BURNS McDONNELL

JACOBS/B&M, A JOINT VENTURE
1100 NORTH GLEBE ROAD
SUITE 500
ARLINGTON, VA 22201

A/E Contract No. N62742-20-D-0002
A/E Task Order No. N6274221F0315
JCG NO. 0343/0603

A/E INFO

APPROVED

FOR COMMANDER NAVFAC DATE 02/02/2026

ACTIVITY
AFIMSC APPROVAL PER NAVFAC SAT-TO CHECKLIST

SATISFACTORY TO DATE 31 DEC 2025

DES:	WBB	DRW:	CDS	REV:	MSL
PM/DM					KKK
BRANCH MANAGER					SMK
CHIEF ENG/ARCH					SMK
FIRE PROTECTION					RO

DEPARTMENT OF THE NAVY
NAVFAC PACIFIC
NAVAL FACILITIES ENGINEERING SYSTEMS COMMAND
NAVAL FACILITIES ENGINEERING SYSTEMS COMMAND – PACIFIC
JOINT REGION MARIANAS (JRM)
ANDERSEN AIR FORCE BASE
GUAM

FY24 AJJY183012 (P-012),
PDI: NORTH AIRCRAFT PARKING RAMP

COMM PLAN - AREA 7

SCALE: AS SHOWN
EPROJECTS NO.: 1665555
CONSTR CONTROL NO.
NAVFAC DRAWING NO. 17361945
SHEET 322 OF 377

CF227

REDESIGN FINAL SUBMITTAL

IF SHEET IS LESS THAN 22" X 34" REDUCED PRINT. USE GRAPHIC SCALES

FILE NAME: Z:\Clients\ANF\USNavy\Poc\133097_GuamP012NAR\Design\Civil\Sheets\P012_133097_CF221-CF233.dwg
LAYOUT NAME: CF227
PLOTTED: 01/14/2026 2:34pm
USER: zdsouba

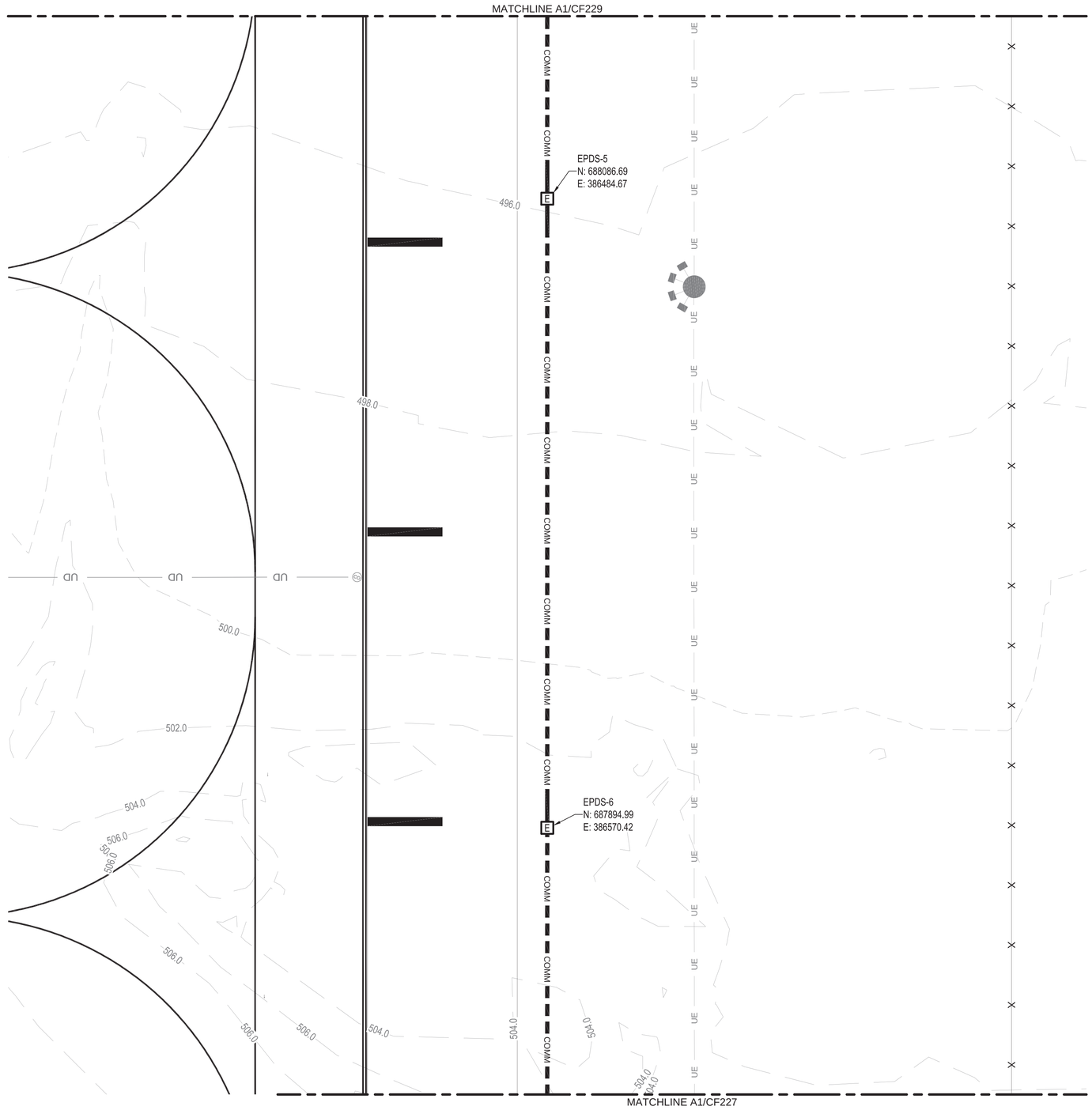

LEGEND

W	WATER
SS	SANITARY SEWER
SD	STORM SEWER
F	FIRE WATER
UE	BURIED ELECTRICAL
UD	UNDERDRAIN
FUEL	JET FUEL
COMM	COMM LINE
	ELECTRICAL/COMM MANHOLE
	TAXILANE LIGHTS
	EPDS HANDHOLE
E	EPDS STATION

KEY PLAN

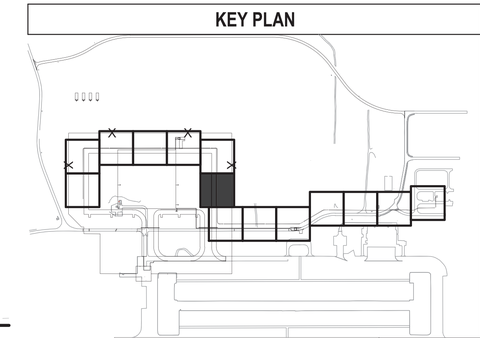

A1 COMM PLAN - AREA 8

SCALE: 1" = 20'

GRAPHIC SCALE

0 20 40

SCALE: 1:20

NORTH ARROW

TRUE N

NAVFAC

STATE OF TEXAS
WILLIAM BATTEY
151640
PROFESSIONAL ENGINEER
01/20/2026

SEAL

Jacobs / BURNS MCDONNELL

JACOBS/B&M, A JOINT VENTURE
1100 NORTH GLEBE ROAD
SUITE 500
ARLINGTON, VA 22201

A/E Contract No. N62742-20-D-0002
A/E Task Order No. N6274221F0315
JCG NO. 0343/0603

A/E INFO

APPROVED

FOR COMMANDER NAVFAC DATE 02/02/2026

ACTIVITY
AFIMSC APPROVAL PER NAVFAC SAT-TO CHECKLIST

SATISFACTORY TO DATE 31 DEC 2025

DES:	WBB	DRW: CDS	REV: MSL
PM/DM			KKK
BRANCH MANAGER			SMK
CHIEF ENG/ARCH			SMK
FIRE PROTECTION			RO

DEPARTMENT OF THE NAVY
NAVFAC PACIFIC
NAVAL FACILITIES ENGINEERING SYSTEMS COMMAND
NAVAL FACILITIES ENGINEERING SYSTEMS COMMAND – PACIFIC
JOINT REGION MARIANAS (JRM)
ANDERSEN AIR FORCE BASE
GUAM

FY24 AJJY183012 (P-012),
PDI: NORTH AIRCRAFT PARKING RAMP

COMM PLAN - AREA 8

SCALE: AS SHOWN
EPROJECTS NO.: 1665555
CONSTR CONTROL NO.
NAVFAC DRAWING NO. 17361946
SHEET 323 OF 377

CF228

REDESIGN FINAL SUBMITTAL

IF SHEET IS LESS THAN 22" X 34" REDUCED PRINT. USE GRAPHIC SCALES

FILE NAME: Z:\Clients\ANF\USNavy\Poc\133097_GuamP012NAR\Design\Civil\Sheets\P012_133097_CF221-CF233.dwg
LAYOUT NAME: CF228
PLOTTED: 01/14/2026 2:34pm
USER: cdsouba

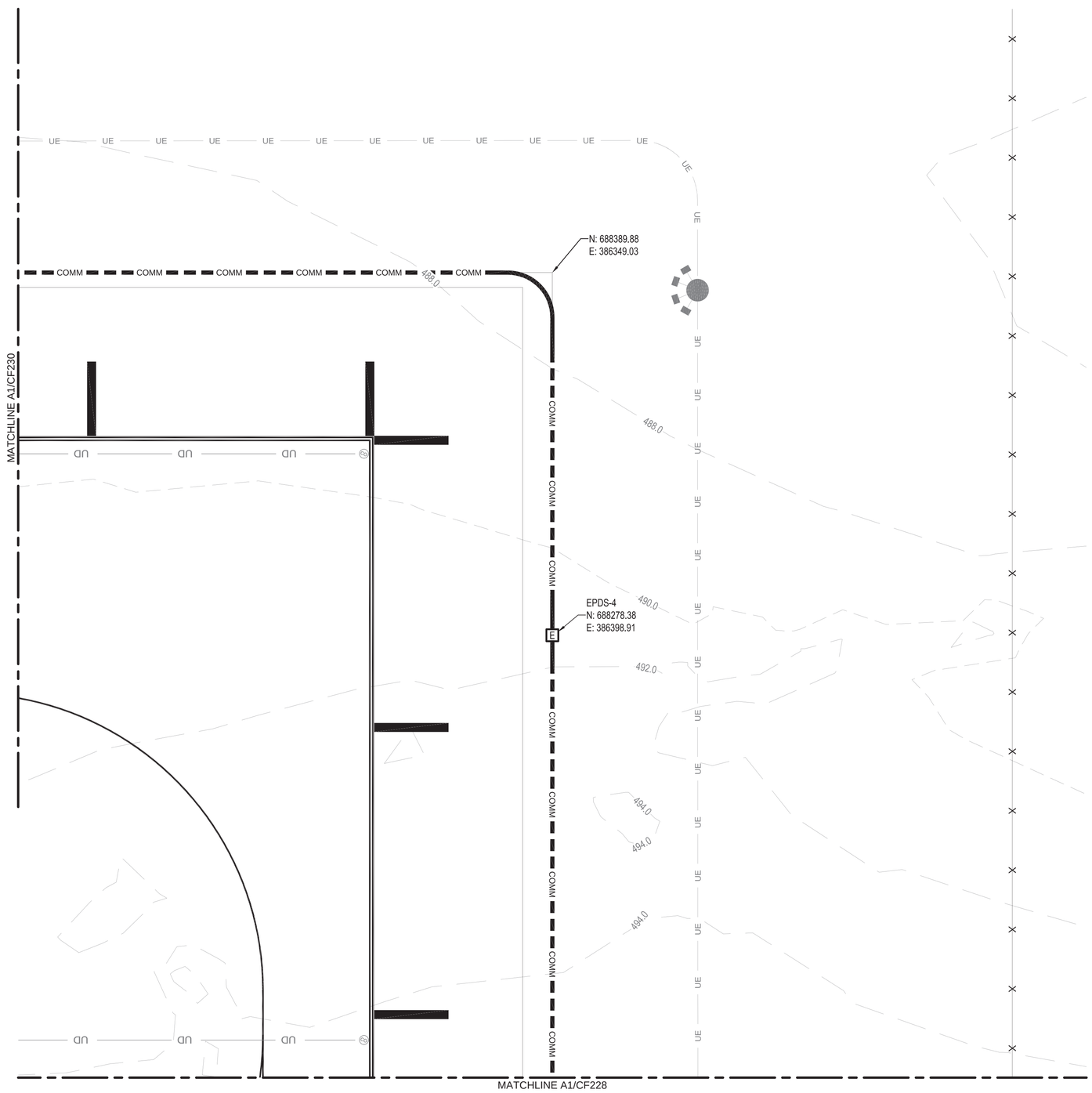

A1 COMM PLAN - AREA 9

SCALE: 1" = 20'

LEGEND

W	WATER
SS	SANITARY SEWER
SD	STORM SEWER
F	FIRE WATER
UE	BURIED ELECTRICAL
UD	UNDERDRAIN
FUEL	JET FUEL
COMM	COMM LINE
	ELECTRICAL/COMM MANHOLE
	TAXILANE LIGHTS
	EPDS HANDHOLE
E	EPDS STATION

KEY PLAN

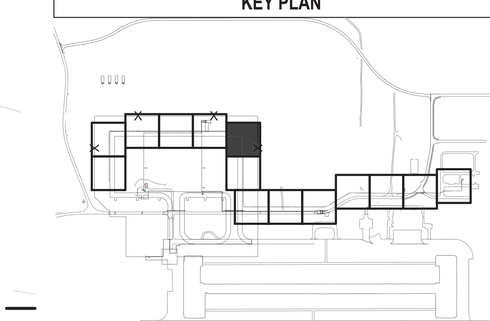

GRAPHIC SCALE

0 20 40

SCALE: 1:20

NORTH ARROW

TRUE N

NAVFAC

STATE OF TEXAS
WILLIAM BATTEY
151640
REGISTERED PROFESSIONAL ENGINEER
01/20/2026
SEAL

Jacobs / BURNS McDONNELL

JACOBS/B&M, A JOINT VENTURE
1100 NORTH GLEBE ROAD
SUITE 500
ARLINGTON, VA 22201

A/E Contract No. N62742-20-D-0002
A/E Task Order No. N6274221F0315
JCG NO. 0343/0603

A/E INFO

APPROVED
Eva Mizpe
FOR COMMANDER NAVFAC DATE 02/02/2026

ACTIVITY
AFIMSC APPROVAL PER NAVFAC SAT-TO CHECKLIST

SATISFACTORY TO DATE 31 DEC 2025

DES:	WBB	DRW:	CDS	REV:	MSL
PM/DM					KKK
BRANCH MANAGER					SMK
CHIEF ENG/ARCH					SMK
FIRE PROTECTION					RO

DEPARTMENT OF THE NAVY
NAVAL FACILITIES ENGINEERING SYSTEMS COMMAND
NAVFAC PACIFIC
NAVAL FACILITIES ENGINEERING SYSTEMS COMMAND – PACIFIC
JOINT REGION MARIANAS (JRM)
ANDERSEN AIR FORCE BASE
GUAM

FY24 AUY183012 (P-012),
PDI: NORTH AIRCRAFT PARKING RAMP

COMM PLAN - AREA 9

SCALE: AS SHOWN
EPROJECTS NO.: 1665555
CONSTR CONTROL NO.
NAVFAC DRAWING NO. 17361947
SHEET 324 OF 377

CF229

REDESIGN FINAL SUBMITTAL

IF SHEET IS LESS THAN 22" X 34"
REDUCED PRINT. USE GRAPHIC SCALES

FILE NAME: Z:\Clients\ANF\USNavy\Poc\133097_GuamP012NAR\Design\Civil\Sheets\P012_133097_CF221-CF233.dwg
LAYOUT NAME: CF229
PLOTTED: 01/14/2026 2:34pm
USER: cd9ouda

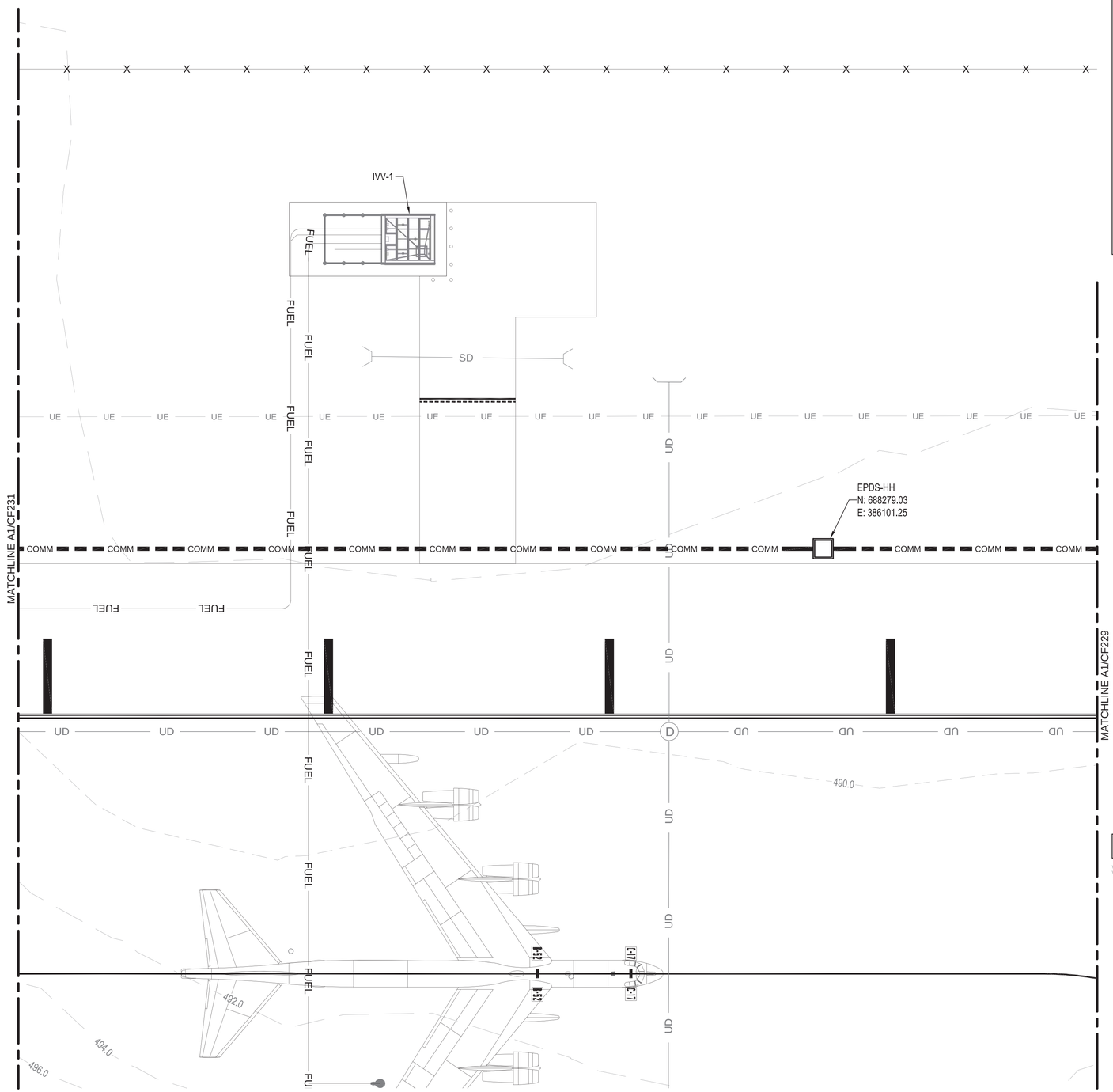

LEGEND

W	WATER
SS	SANITARY SEWER
SD	STORM SEWER
F	FIRE WATER
UE	BURIED ELECTRICAL
UD	UNDERDRAIN
FUEL	JET FUEL
COMM	COMM LINE
	ELECTRICAL/COMM MANHOLE
	TAXILANE LIGHTS
	EPDS HANDHOLE
E	EPDS STATION

KEY PLAN

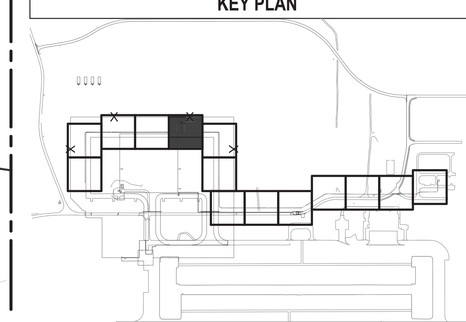

A1 COMM PLAN - AREA 10

SCALE: 1" = 20'

GRAPHIC SCALE

0 20 40

SCALE: 1:20

NORTH ARROW

TRUE N

NAVFAC

STATE OF TEXAS
WILLIAM BATTEY
151640
PROFESSIONAL ENGINEER
01/20/2026

SEAL

Jacobs / BURNS McDONNELL

JACOBS/B&M, A JOINT VENTURE
1100 NORTH GLEBE ROAD
SUITE 500
ARLINGTON, VA 22201

A/E Contract No. N62742-20-D-0002
A/E Task Order No. N6274221F0315
JCG NO. 0343/0603

A/E INFO

APPROVED

FOR COMMANDER NAVFAC DATE 02/02/2026

ACTIVITY

AFIMSC APPROVAL PER NAVFAC SAT-TO CHECKLIST

SATISFACTORY TO DATE	31 DEC 2025
DES: WBB	DRW: CDS	REV: MSL
PM/DM	KKK
BRANCH MANAGER	SMK
CHIEF ENG/ARCH	SMK
FIRE PROTECTION	RO

DEPARTMENT OF THE NAVY
NAVFAC PACIFIC
ANDERSEN AIR FORCE BASE
NAVAL FACILITIES ENGINEERING SYSTEMS COMMAND
NAVAL FACILITIES ENGINEERING SYSTEMS COMMAND – PACIFIC
JOINT REGION MARIANAS (JRM)
GUAM

FY24 AJJY183012 (P-012),
PDI: NORTH AIRCRAFT PARKING RAMP

COMM PLAN - AREA 10

SCALE:	AS SHOWN
EPROJECTS NO.:	1665555
CONSTR CONTROL NO.	
NAVFAC DRAWING NO.	17361948
SHEET	325 OF 377

CF230

REDESIGN FINAL SUBMITTAL

IF SHEET IS LESS THAN 22" X 34"
REDUCED PRINT. USE GRAPHIC SCALES

FILE NAME: Z:\Clients\ANF\USNavy\Pac\133097_GuamP012NAR\Design\Civil\Sheets\P012_133097_CF221-CF233.dwg
LAYOUT NAME: CF230
PLOTTED: 01/14/2026 2:34pm
USER: zdzubo

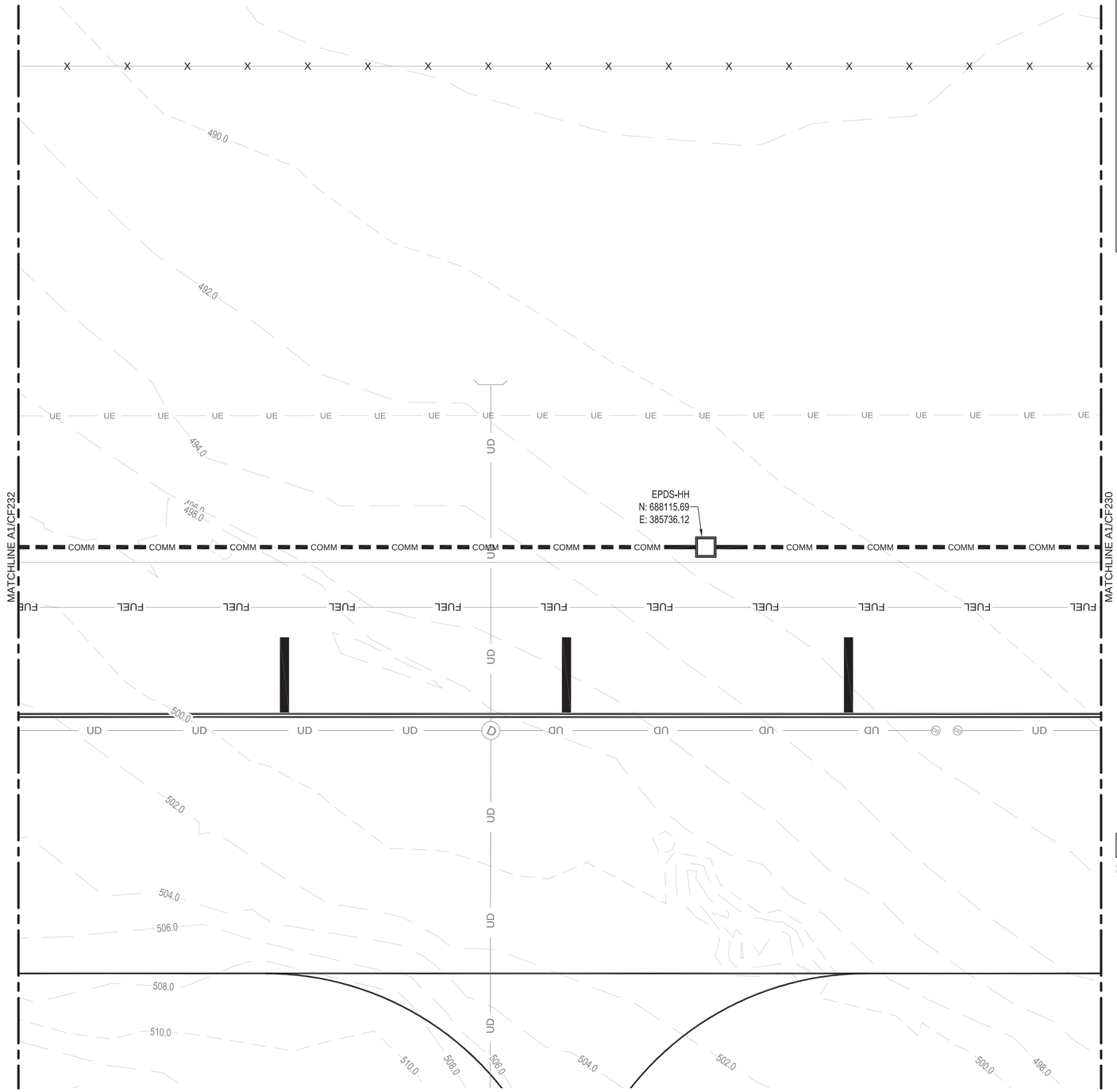

A1 COMM PLAN - AREA 11

SCALE: 1" = 20'

LEGEND

W	WATER
SS	SANITARY SEWER
SD	STORM SEWER
F	FIRE WATER
UE	BURIED ELECTRICAL
UD	UNDERDRAIN
FUEL	JET FUEL
COMM	COMM LINE
	ELECTRICAL/COMM MANHOLE
	TAXILANE LIGHTS
	EPDS HANDHOLE
E	EPDS STATION

KEY PLAN

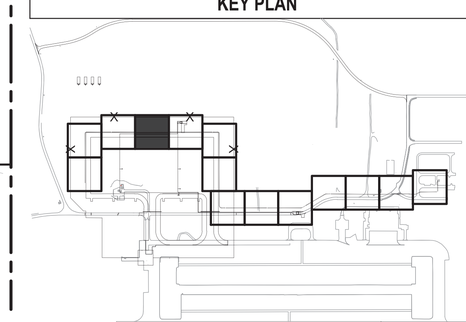

GRAPHIC SCALE

0 20 40

SCALE: 1:20

NORTH ARROW

TRUE N

NAVFAC

STATE OF TEXAS
WILLIAM BATTEY
151640
REGISTERED PROFESSIONAL ENGINEER
01/20/2026
SEAL

Jacobs / BURNS MCDONNELL

JACOBS/B&M, A JOINT VENTURE
1100 NORTH GLEBE ROAD
SUITE 500
ARLINGTON, VA 22201

A/E Contract No. N62742-20-D-0002
A/E Task Order No. N6274221F0315
JCG NO. 0343/0603

A/E INFO

APPROVED

FOR COMMANDER NAVFAC DATE 02/02/2026

ACTIVITY
AFIMSC APPROVAL PER NAVFAC SAT-TO CHECKLIST

SATISFACTORY TO DATE 31 DEC 2025

DES:	WBB	DRW:	CDS	REV:	MSL
PM/DM					KKK
BRANCH MANAGER					SMK
CHIEF ENG/ARCH					SMK
FIRE PROTECTION					RO

DEPARTMENT OF THE NAVY
NAVAL FACILITIES ENGINEERING SYSTEMS COMMAND
NAVFAC PACIFIC
NAVAL FACILITIES ENGINEERING SYSTEMS COMMAND – PACIFIC
JOINT REGION MARIANAS (JRM)
ANDERSEN AIR FORCE BASE
GUAM

FY24 AJJY183012 (P-012),
PDI: NORTH AIRCRAFT PARKING RAMP

COMM PLAN - AREA 11

SCALE: AS SHOWN

EPROJECTS NO.: 1665555

CONSTR CONTROL NO.

NAVFAC DRAWING NO.
17361949

SHEET 326 OF 377

CF231

REDESIGN FINAL SUBMITTAL

IF SHEET IS LESS THAN 22" X 34"
REDUCED PRINT. USE GRAPHIC SCALES

FILE NAME: Z:\Clients\ANF\USNavy\Poc\133097_GuamP012NAR\Design\Civil\Sheets\P012_133097_CF221-CF233.dwg
LAYOUT NAME: CF231
PLOTTED: 01/14/2026 2:35pm
USER: cdsoubs

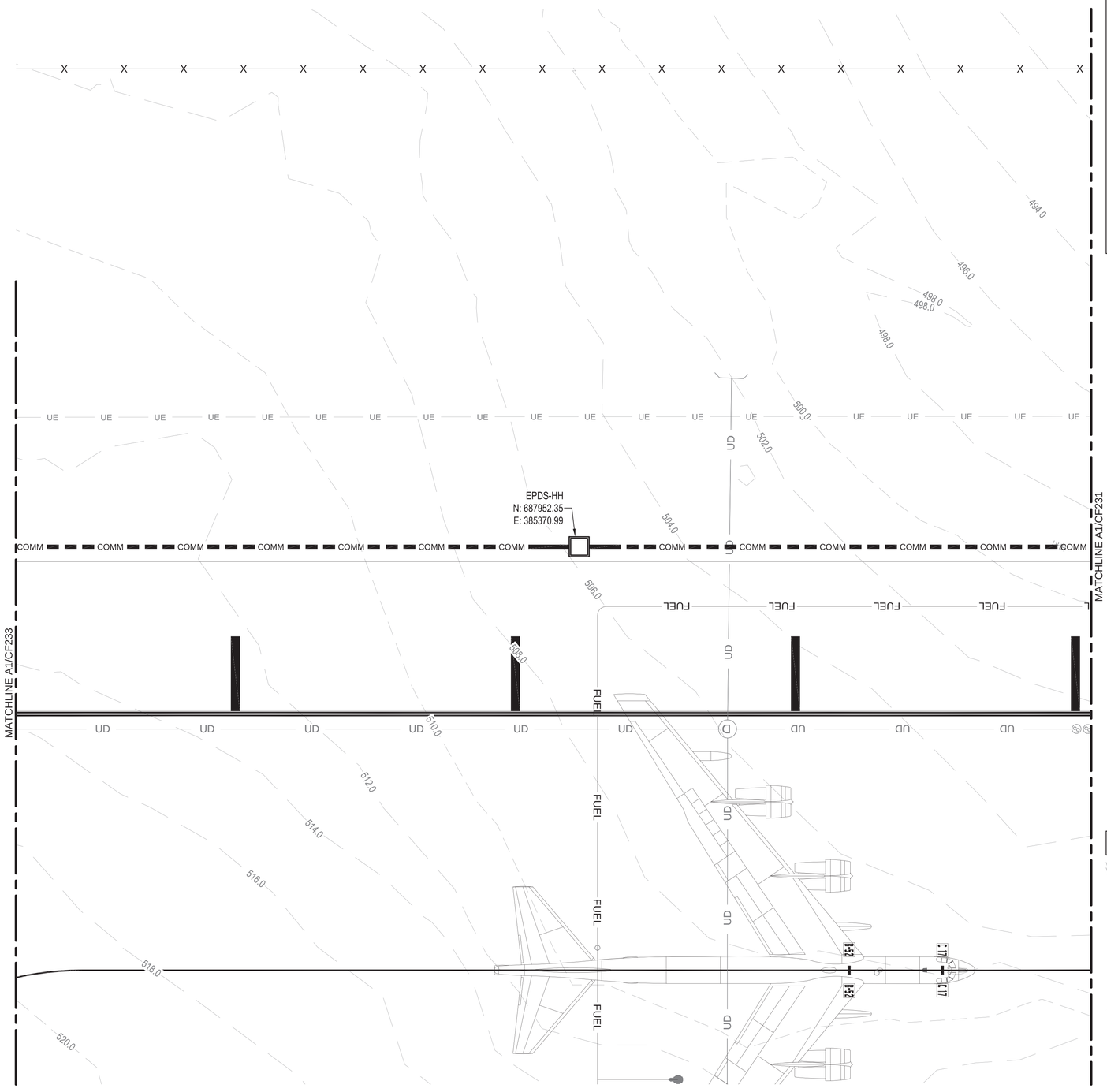

A1 COMM PLAN - AREA 12

SCALE: 1" = 20'

LEGEND

W	WATER
SS	SANITARY SEWER
SD	STORM SEWER
F	FIRE WATER
UE	BURIED ELECTRICAL
UD	UNDERDRAIN
FUEL	JET FUEL
COMM	COMM LINE
	ELECTRICAL/COMM MANHOLE
	TAXILANE LIGHTS
	EPDS HANDHOLE
E	EPDS STATION

KEY PLAN

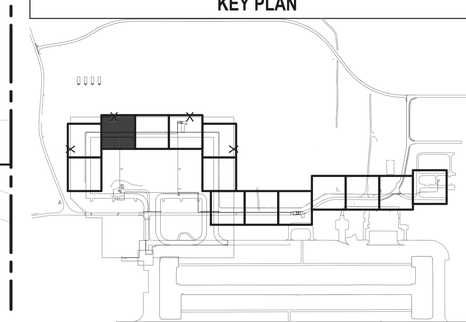

GRAPHIC SCALE

0 20 40

SCALE: 1:20

NORTH ARROW

TRUE N

NAVFAC

STATE OF TEXAS
WILLIAM BATTEY
151640
REGISTERED PROFESSIONAL ENGINEER
01/20/2026
SEAL

Jacobs / BURNS McDONNELL

JACOBS/B&M, A JOINT VENTURE
1100 NORTH GLEBE ROAD
SUITE 500
ARLINGTON, VA 22201

A/E Contract No. N62742-20-D-0002
A/E Task Order No. N6274221F0315
JCG NO. 0343/0603

A/E INFO

APPROVED

FOR COMMANDER NAVFAC DATE 02/02/2026

ACTIVITY
AFIMSC APPROVAL PER NAVFAC SAT-TO CHECKLIST

SATISFACTORY TO DATE 31 DEC 2025

DES:	WBB	DRW: CDS	REV: MSL
PM/DM			KKK
BRANCH MANAGER			SMK
CHIEF ENG/ARCH			SMK
FIRE PROTECTION			RO

DEPARTMENT OF THE NAVY
NAVFAC PACIFIC
NAVAL FACILITIES ENGINEERING SYSTEMS COMMAND
NAVAL FACILITIES ENGINEERING SYSTEMS COMMAND – PACIFIC
JOINT REGION MARIANAS (JRM)
ANDERSEN AIR FORCE BASE
GUAM

FY24 AJJY183012 (P-012),
PDI: NORTH AIRCRAFT PARKING RAMP

COMM PLAN - AREA 12

SCALE: AS SHOWN
EPROJECTS NO.: 1665555
CONSTR CONTROL NO.
NAVFAC DRAWING NO. 17361950
SHEET 327 OF 377

CF232

REDESIGN FINAL SUBMITTAL

IF SHEET IS LESS THAN 22" X 34"
REDUCED PRINT. USE GRAPHIC SCALES

FILE NAME: Z:\Clients\ANF\USNavy\Pac\133097_GuamP012NAR\Design\Civil\Sheets\P012_133097_CF221-CF233.dwg
LAYOUT NAME: CF232
PLOTTED: 01/14/2026 2:35pm
USER: zdzubo

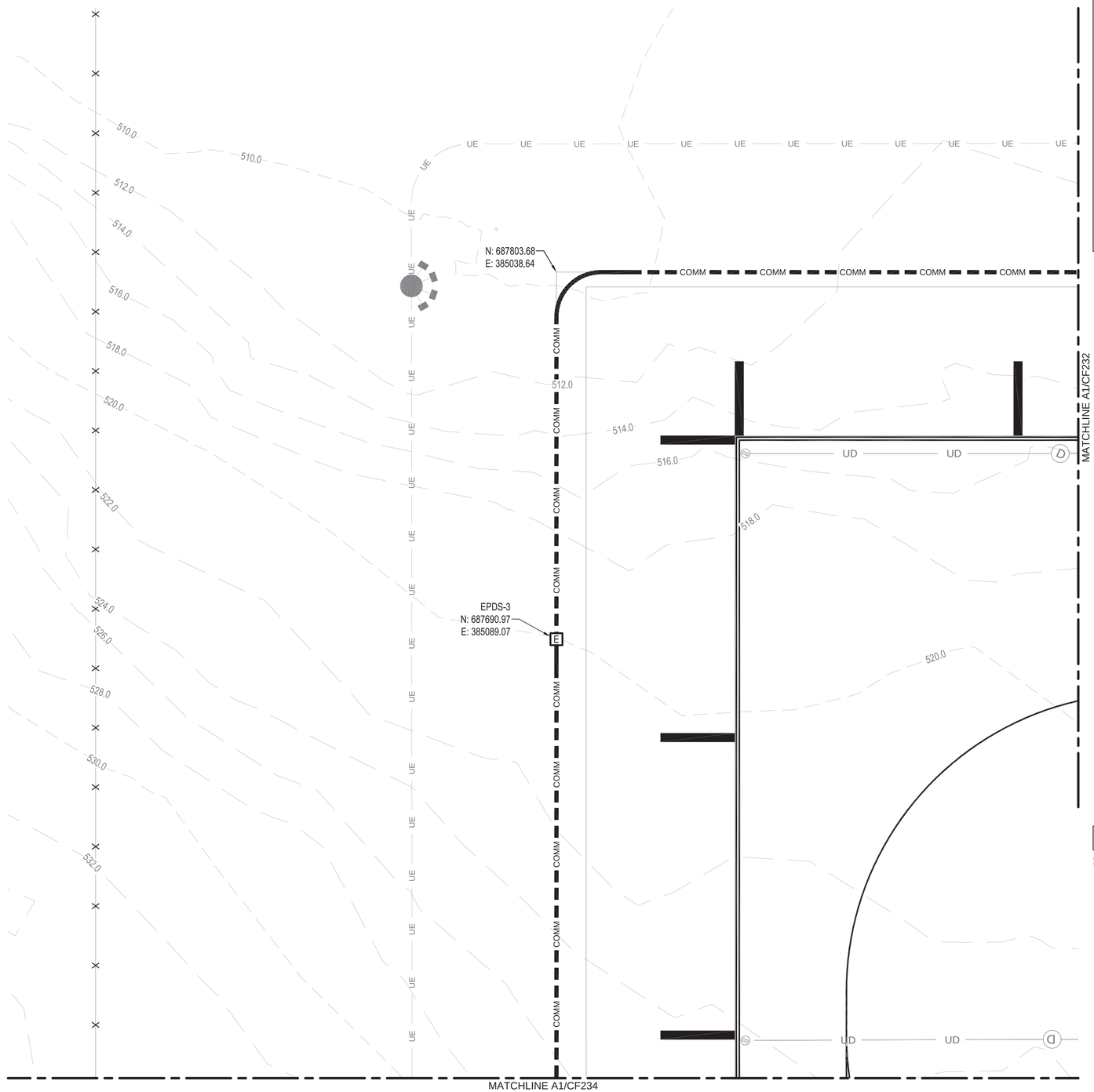

A1 COMM PLAN - AREA 13

SCALE: 1" = 20'

LEGEND

W	WATER
SS	SANITARY SEWER
SD	STORM SEWER
F	FIRE WATER
UE	BURIED ELECTRICAL
UD	UNDERDRAIN
FUEL	JET FUEL
COMM	COMM LINE
	ELECTRICAL/COMM MANHOLE
	TAXILANE LIGHTS
	EPDS HANDHOLE
E	EPDS STATION

KEY PLAN

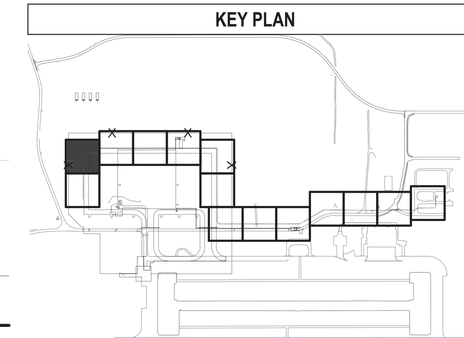

GRAPHIC SCALE

0 20 40

SCALE: 1:20

NORTH ARROW

TRUE N

NAVFAC

STATE OF TEXAS
WILLIAM BATTEY
151640
REGISTERED PROFESSIONAL ENGINEER
01/20/2026
SEAL

Jacobs / BURNS McDONNELL
JACOBS/B&M, A JOINT VENTURE
1100 NORTH GLEBE ROAD
SUITE 500
ARLINGTON, VA 22201

A/E Contract No. N62742-20-D-0002
A/E Task Order No. N6274221F0315
JCG NO. 0343/0603
A/E INFO

APPROVED
FOR COMMANDER NAVFAC DATE 02/02/2026

ACTIVITY
AFIMSC APPROVAL PER NAVFAC SAT-TO CHECKLIST

SATISFACTORY TO DATE 31 DEC 2025

DES:	WBB	DRW:	CDS	REV:	MSL
PM/DM					KKK
BRANCH MANAGER					SMK
CHIEF ENG/ARCH					SMK
FIRE PROTECTION					RO

DEPARTMENT OF THE NAVY
NAVFAC PACIFIC
NAVAL FACILITIES ENGINEERING SYSTEMS COMMAND
NAVAL FACILITIES ENGINEERING SYSTEMS COMMAND – PACIFIC
JOINT REGION MARIANAS (JRM)
ANDERSEN AIR FORCE BASE
GUAM

FY24 AJJY183012 (P-012),
PDI: NORTH AIRCRAFT PARKING RAMP

COMM PLAN - AREA 13

SCALE: AS SHOWN
EPROJECTS NO.: 1665555
CONSTR CONTROL NO.
NAVFAC DRAWING NO. 17361951
SHEET 328 OF 377

CF233

REDESIGN FINAL SUBMITTAL

IF SHEET IS LESS THAN 22" X 34"
REDUCED PRINT. USE GRAPHIC SCALES

FILE NAME: Z:\Clients\ANF\USNavy\Pac\133097_GuamP012NAR\Design\Civil\Sheets\P012_133097_CF221-CF233.dwg
LAYOUT NAME: CF233
PLOTTED: 01/14/2026 2:35pm
USER: cd9ouDo

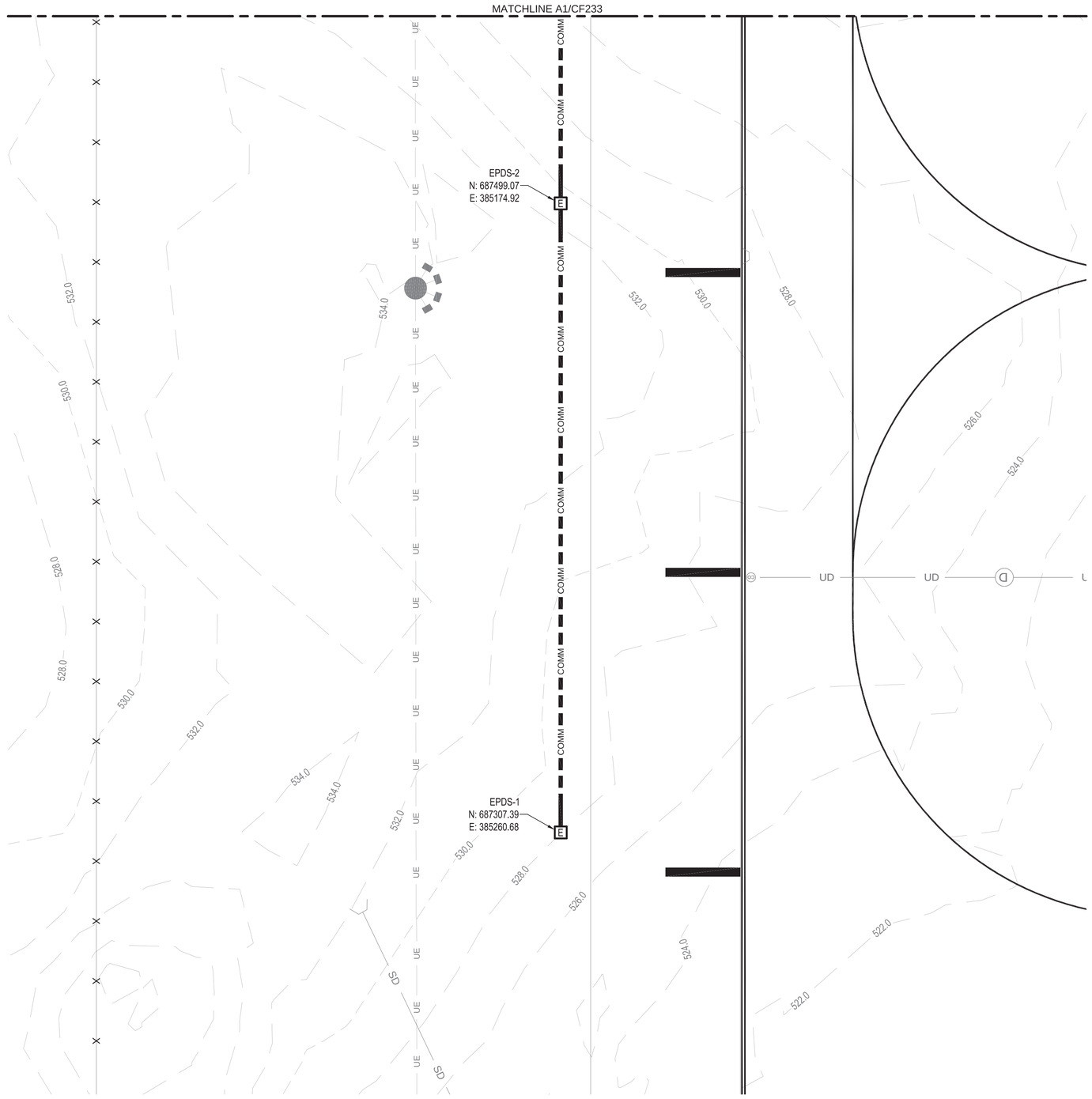

A1 COMM PLAN - AREA 14

SCALE: 1" = 20'

LEGEND

W	WATER
SS	SANITARY SEWER
SD	STORM SEWER
F	FIRE WATER
UE	BURIED ELECTRICAL
UD	UNDERDRAIN
FUEL	JET FUEL
COMM	COMM LINE
	ELECTRICAL/COMM MANHOLE
	TAXILANE LIGHTS
	EPDS HANDHOLE
E	EPDS STATION

KEY PLAN

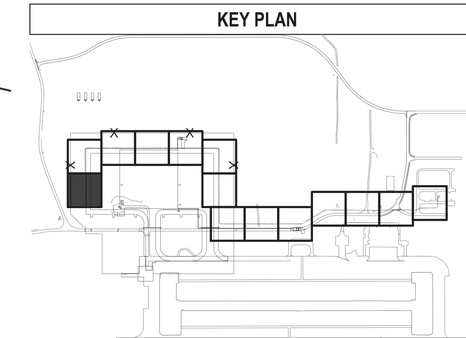

GRAPHIC SCALE

0 20 40

SCALE: 1:20

NORTH ARROW

TRUE N

NAVFAC

STATE OF TEXAS
WILLIAM BATTEY
151640
REGISTERED PROFESSIONAL ENGINEER
01/20/2026

SEAL

Jacobs / BURNS McDONNELL

JACOBS/B&M, A JOINT VENTURE
1100 NORTH GLEBE ROAD
SUITE 500
ARLINGTON, VA 22201

A/E Contract No. N62742-20-D-0002
A/E Task Order No. N6274221F0315
JCG NO. 0341/0603

A/E INFO

APPROVED

FOR COMMANDER NAVFAC DATE 02/02/2026

ACTIVITY

AFIMSC APPROVAL PER NAVFAC SAT-TO CHECKLIST

SATISFACTORY TO DATE 31 DEC 2025

DES:	WBB	DRW:	CDS	REV:	MSL

PM/DM	KKK
BRANCH MANAGER	SMK
CHIEF ENG/ARCH	SMK
FIRE PROTECTION	RO

DEPARTMENT OF THE NAVY
NAVFAC PACIFIC
ANDERSEN AIR FORCE BASE

NAVAL FACILITIES ENGINEERING SYSTEMS COMMAND
NAVAL FACILITIES ENGINEERING SYSTEMS COMMAND – PACIFIC
JOINT REGION MARIANAS (JRM)

GUAM

FY24 AJJY183012 (P-012),
PDI: NORTH AIRCRAFT PARKING RAMP

COMM PLAN - AREA 14

SCALE: AS SHOWN

EPROJECTS NO.: 1665555

CONSTR CONTROL NO.

NAVFAC DRAWING NO.
17361952

SHEET 329 OF 377

CF234

REDESIGN FINAL SUBMITTAL

IF SHEET IS LESS THAN 22" X 34"
REDUCED PRINT. USE GRAPHIC SCALES

FILE NAME: Z:\Clients\ANF\USNavy\Pac\133097_GuamP012NAR\Design\Civil\Sheets\P012_133097_CF221-CF233.dwg
LAYOUT NAME: CF234
PLOTTED: 01/14/2026 2:35pm
USER: zdzubo

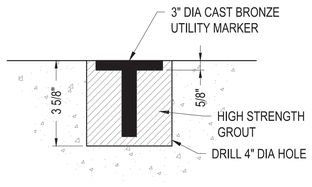

CONCRETE PAVEMENT

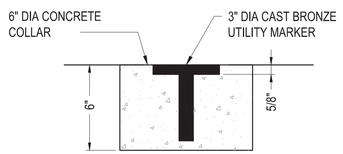

ASPHALT PAVEMENT OR UNPAVED AREAS

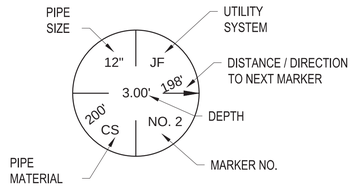

NOTES:

1. MARKER MUST BE FLUSH MOUNTED.
2. MARKERS MUST BE SPACED AT 500-FOOT INTERVALS AND AT BENDS IN 12" AND 14" FUEL PIPES.
3. DEPTH MUST BE DISTANCE FROM TOP OF MARKER TO TOP OF PIPE.
4. ARROW MUST BE DIRECTION OF UTILITY, DIRECTION OF FLOW AND DISTANCE TO AND FROM NEXT MARKER SHOWN AT ENDS OF ARROW. SHOW ARROWS ONLY WHERE LINES ARE NOT LOOPED.

C1 FUEL PIPE MARKER DETAIL

NOT TO SCALE

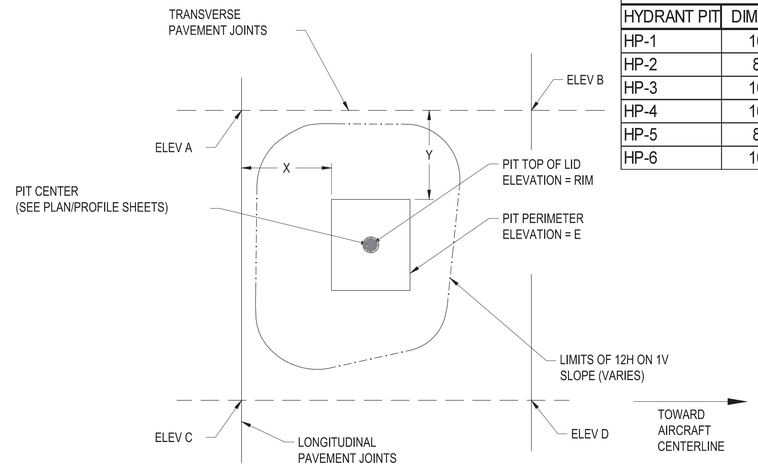

TABLE 1: HYDRANT PIT DIMENSIONS AND ELEVATIONS								
HYDRANT PIT	DIM X (FT)	DIM Y (FT)	RIM	ELEV A	ELEV B	ELEV C	ELEV D	ELEV E
HP-1	10.57	5.50	512.13	512.16	511.86	512.17	511.88	511.96
HP-2	8.81	5.34	515.38	515.38	515.08	515.39	515.10	515.21
HP-3	10.80	5.50	518.57	518.59	518.30	518.61	518.32	518.40
HP-4	10.57	5.48	514.48	512.49	512.21	512.50	512.22	514.31
HP-5	8.81	5.31	515.57	515.57	515.29	515.56	515.29	515.40
HP-6	10.78	5.43	518.61	518.64	518.36	518.63	518.35	518.44

NOTES:

1. SEE TABLE 1 FOR DIMENSIONS AND ELEVATIONS FOR EACH HYDRANT PIT.
2. SEE SF114 AND MF506 FOR HYDRANT PIT DETAILS.
3. SET PIT HINGE SO THE LID OPENS TOWARD THE AIRCRAFT.

C3 HYDRANT OUTLET PIT ELEVATIONS

NOT TO SCALE

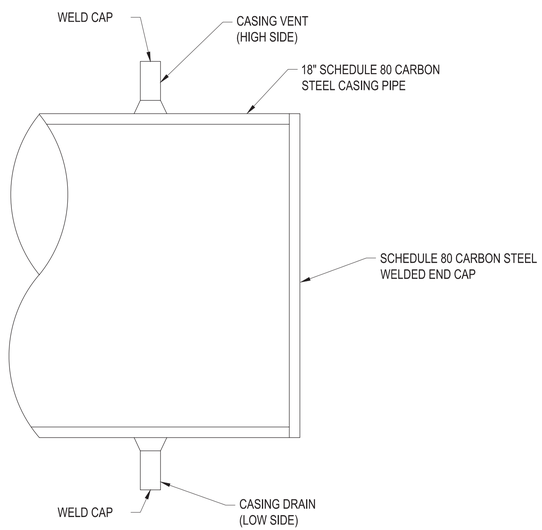

NOTES:

1. CASING PIPE LOCATIONS AND ELEVATIONS ARE BASED ON MINIMUM 4 FEET DEPTH OF COVER BELOW GRADE AND MINIMUM 0.5% SLOPE FOR FUTURE TRANSFER LINES CROSSING THE TAXILANES. CONFIRM LOCATIONS WITH ENGINEER AND CONTRACTING OFFICER PRIOR TO INSTALLATION.
2. PROVIDE CASING DRAIN/VENT ON CASING LOW AND HIGH POINTS AS SHOWN IN THE PLANS. CAP FOR FUTURE INSTALLATION OF CASING DRAIN/VENT LINES AND PITS.

A1 CASING PIPE AND END CAP DETAIL

NOT TO SCALE

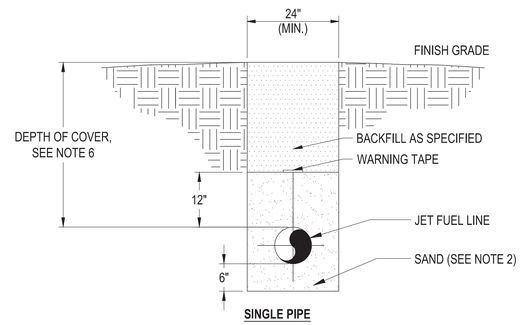

SINGLE PIPE

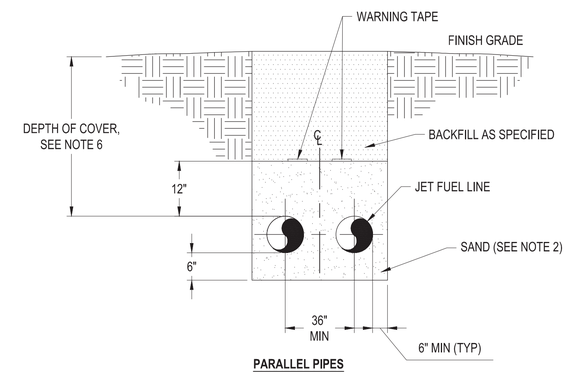

PARALLEL PIPES

NOTES:

1. SEE PLANS FOR NUMBER AND SIZE OF FUEL LINES IN TRENCH. SEE CATHODIC PROTECTION DRAWINGS FOR ADDITIONAL TRENCH REQUIREMENTS ADJACENT TO PIPING AT TEST STATION LOCATIONS.
2. SEE SPECIFICATION SECTION 31 00 00 FOR FUEL PIPE SAND BEDDING MATERIAL.
3. BOTTOM OF TRENCH AND BEDDING MATERIAL MUST PROVIDE UNIFORM LONGITUDINAL SUPPORT FOR BOTTOM SECTION OF PIPE.
4. FINAL BACKFILL UNDER PAVEMENTS MAY BE SUBJECTED TO ADDITIONAL COMPACTION REQUIREMENTS AND TESTING. SEE PAVEMENT SECTIONS AND SPECIFICATIONS.
5. BURIED WARNING AND IDENTIFICATION TAPE MUST BE PROVIDED IN ACCORDANCE WITH SPECIFICATIONS.
6. INSTALL FUEL PIPING WITH A MINIMUM OF 48 INCHES BELOW GRADE, UNLESS OTHERWISE NOTED.
7. MINIMUM VERTICAL SEPARATION OF FUEL PIPING FROM OTHER UTILITIES IS 12 INCHES, UNLESS OTHERWISE NOTED.

A3 FUEL PIPE TRENCH DETAIL

NOT TO SCALE

NAVFAC

STATE OF TEXAS
WILLIAM BATTEY
151640
PROFESSIONAL ENGINEER
01/20/2026
SEAL

Jacobs / BURNS McDONNELL
JACOBS/B&M, A JOINT VENTURE
1100 NORTH GLEBE ROAD
SUITE 500
ARLINGTON, VA 22201

A/E Contract No. N62742-20-D-0002
A/E Task Order No. N6274221F0315
JCG NO. 0343/0603
A/E INFO

APPROVED
FOR COMMANDER NAVFAC DATE 02/02/2026

ACTIVITY
AFIMSC APPROVAL PER NAVFAC SAT-TO CHECKLIST

SATISFACTORY TO DATE 31 DEC 2025

DES: WBB	DRW: CDS	REV: MSL	
PM/DM			KKK
BRANCH MANAGER			SMK
CHIEF ENG/ARCH			SMK
FIRE PROTECTION			RO

DEPARTMENT OF THE NAVY
NAVAL FACILITIES ENGINEERING SYSTEMS COMMAND
NAVFAC PACIFIC
NAVAL FACILITIES ENGINEERING SYSTEMS COMMAND – PACIFIC
JOINT REGION MARIANAS (JRM)
ANDERSEN AIR FORCE BASE
GUAM

FY24 AUY183012 (P-012),
PDI: NORTH AIRCRAFT PARKING RAMP

FUELING DETAILS

SCALE: AS SHOWN
EPROJECTS NO.: 1665555
CONSTR CONTROL NO.
NAVFAC DRAWING NO.
17361953
SHEET 330 OF 377

CF501

REDESIGN FINAL SUBMITTAL

IF SHEET IS LESS THAN 22" X 34"
REDUCED PRINT. USE GRAPHIC SCALES

FILE NAME: Z:\Clients\ANF\USNavy\Pac\133097_GuamP012NAR\Design\Civil\Sheets\P012_133097CF501.dwg
LAYOUT NAME: CF501
PLOTTED: 01/14/2026 2:36pm
USER: cd3ouda

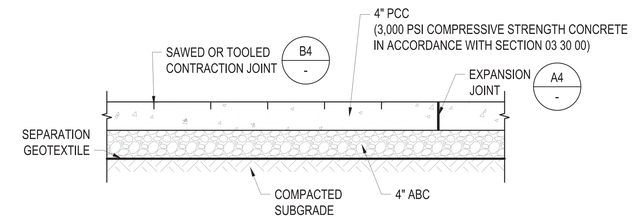

C4 CONCRETE WALK SECTION

SCALE: NTS

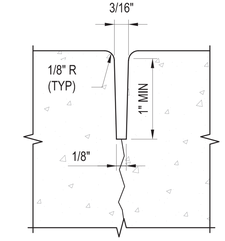

NOTE:

1. IF SAWED CONTRACTION JOINTS ARE CHOSEN, SAW CUT MUST BE 1/8" WIDE AND 1" DEPTH.

B4 TOOLED CONTRACTION JOINT DETAIL

SCALE: NTS

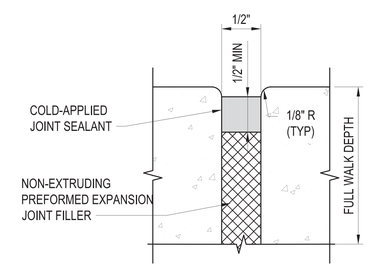

NOTES:

1. LOCATE EXPANSION JOINTS WHERE THE WALK ABUTS STRUCTURES OR CONCRETE PAVEMENTS.

A4 EXPANSION JOINT DETAIL

SCALE: NTS

NAVFAC

STATE OF TEXAS
WILLIAM BATTEY
151640
PROFESSIONAL ENGINEER
01/20/2026

SEAL

Jacobs / BURNS McDONNELL

JACOBS/B&M, A JOINT VENTURE
1100 NORTH GLEBE ROAD
SUITE 500
ARLINGTON, VA 22201

A/E Contract No. N62742-20-D-0002
A/E Task Order No. N6274221F0315
JEG NO. D3430603

A/E INFO

APPROVED

FOR COMMANDER NAVFAC DATE 02/02/2026

ACTIVITY
AFIMSC APPROVAL PER NAVFAC SAT-TO CHECKLIST

SATISFACTORY TO DATE 31 DEC 2025

DES:	WBB	DRW:	CDS	REV:	MSL
PM/DM					KKK
BRANCH MANAGER					SMK
CHIEF ENG/ARCH					SMK
FIRE PROTECTION					RO

DEPARTMENT OF THE NAVY
NAVFAC PACIFIC
NAVAL FACILITIES ENGINEERING SYSTEMS COMMAND
NAVAL FACILITIES ENGINEERING SYSTEMS COMMAND – PACIFIC
JOINT REGION MARIANAS (JRM)
ANDERSEN AIR FORCE BASE
GUAM

FY24 AJJY183012 (P-012),
PDI: NORTH AIRCRAFT PARKING RAMP

FUELING DETAILS

SCALE: AS SHOWN
EPROJECTS NO.: 1665555
CONSTR CONTROL NO.
NAVFAC DRAWING NO. 17361954
SHEET 331 OF 377

CF502

REDESIGN FINAL SUBMITTAL

FILE NAME: Z:\Clients\ANF\USNavy\Pac\133097_GuamP012NAR\Design\Civil\Sheets\P012_133097CF501.dwg
LAYOUT NAME: CF502
PLOTTED: 01/14/2026 2:36pm
USER: cdsoubs

IF SHEET IS LESS THAN 22" X 34"
REDUCED PRINT. USE GRAPHIC SCALES

STRUCTURAL GENERAL NOTES (FOR FUEL FACILITIES):

THE STRUCTURAL NOTES SHOWN ON THIS DRAWING ONLY APPLY TO WORK INDICATED ON THE SF SERIES SHEETS.

A. GENERAL:
1. THESE NOTES, AND OTHER DRAWING NOTES CONTAINED WITHIN, ARE PROVIDED TO MEET SPECIFIC REQUIREMENTS AND TO SUPPLEMENT CONTRACT SPECIFICATIONS. THESE NOTES NEITHER REPLACE NOR OVERRIDE PROVISIONS AND REQUIREMENTS OF CONTRACT SPECIFICATIONS.
2. COORDINATE STRUCTURAL WORK WITH WORK SHOWN ON OTHER DRAWINGS.
3. VERIFY DIMENSIONS OF ACTUAL EQUIPMENT TO BE INSTALLED AND REPORT DISCREPANCIES FROM CONTRACT DRAWINGS TO CONTRACTING OFFICER PRIOR TO COMMENCING WITH WORK. SCALING OF WORKING DIMENSIONS FROM STRUCTURAL DRAWINGS IS PROHIBITED.
4. CONTRACT DRAWINGS AND SPECIFICATIONS REPRESENT FINISHED STRUCTURE. CONTRACTOR IS RESPONSIBLE FOR MEANS AND METHODS OF CONSTRUCTION INCLUDING, BUT NOT LIMITED TO, SHORING AND TEMPORARY BRACING. UNDERTAKE NECESSARY MEASURES TO ENSURE SAFETY OF PERSONS AND STRUCTURES AT SITE AND ADJACENT TO SITE. VISITS TO THE SITE BY CONTRACTING OFFICER OR ENGINEER DO NOT RELIEVE CONTRACTOR OF SUCH RESPONSIBILITY.
5. IF CERTAIN FEATURES ARE NOT FULLY SHOWN OR CALLED FOR ON THE CONTRACT DRAWINGS OR SPECIFICATIONS, PROVIDE CONSTRUCTION OF THE SAME CHARACTER AS FOR SIMILAR CONDITIONS THAT ARE SHOWN OR CALLED FOR, WITH APPROVAL OF CONTRACTING OFFICER. WHERE SECTIONS VARY, PROVIDE FOR SMOOTH TRANSITIONS BETWEEN THEM, UNLESS NOTED OTHERWISE.
6. INSTALL PRODUCTS IN ACCORDANCE WITH MANUFACTURERS' WRITTEN INSTRUCTIONS AND RECOMMENDATIONS, UNLESS NOTED OTHERWISE.
7. UNLESS INDICATED OTHERWISE, TYPICAL DETAILS SHOWN ON SF DRAWINGS APPLY TO STRUCTURES SHOWN ON SF DRAWINGS ONLY.

B. DESIGN CODES AND STANDARDS:
1. UFC 1-200-01, DOD BUILDING CODE, CHANGE 4, DECEMBER 17 2024.
2. UFC 3-260-01, AIRFIELD AND HELIPORT PLANNING AND DESIGN, CHANGE 1, 5 MAY 2020.
3. UFC 3-301-01, STRUCTURAL ENGINEERING, CHANGE 4, JUNE 3 2025.
4. UFC 3-460-01, DESIGN: PETROLEUM FUEL FACILITIES, CHANGE 3, JUNE 8 2023.
5. IBC 2024, INTERNATIONAL BUILDING CODE
6. ASCE 7, MINIMUM DESIGN AND ASSOCIATED CRITERIA LOADS FOR BUILDINGS AND OTHER STRUCTURES, 2022.
7. ACI 318, BUILDING CODE REQUIREMENTS FOR STRUCTURAL CONCRETE, 2019.
8. ACI 350, ENVIRONMENTAL ENGINEERING CONCRETE STRUCTURES, 2020.
9. AISC 325, STEEL CONSTRUCTION MANUAL, 16th EDITION, 2023.
10. AISC 360, SPECIFICATION FOR STRUCTURAL STEEL BUILDINGS, 2022.
11. AISC 341, SEISMIC PROVISIONS FOR STRUCTURAL STEEL BUILDINGS, 2022.
12. AW 078-24-28 PRESSURIZED HYDRANT FUELING SYSTEM TYPE III, MARCH 2020
13. MARIANAS NAVY AND MARINE CORPS DESIGN AND CONSTRUCTION STANDARDS (MDACS) WITH AMENDMENT 001 (OCTOBER 2019) AND AMENDMENT 002 (DECEMBER 2020).
14. ANDERSEN AFB ARCHITECTURAL COMPATIBILITY & BASE DESIGN STANDARDS (ACBDS), 2013.
15. ANDERSEN AIR FORCE BASE INSTALLATION FACILITIES STANDARDS (IFS), 2020.
16. AWS D1.1/D1.1M - AMERICAN WELDING SOCIETY "STRUCTURAL WELDING CODE-STEEL", 2025.
17. AWS D1.6/D1.6M - AMERICAN WELDING SOCIETY "STRUCTURAL WELDING CODE- STAINLESS STEEL", 2021.

C. SPECIAL INSPECTIONS: SEE SPECIFICATION SECTION 01 45 35 WITH ATTACHMENTS.

D. DESIGN LOADS:
1. RISK CATEGORY: II.
2. DEAD LOAD:
   a. CONCRETE STRUCTURES: 150 PCF
   b. EQUIPMENT LOADS: ACTUAL WEIGHT
3. LIVE LOADS:
   a. ISOLATION VALVE VAULTS:
      - AASHTO HS20-44 TRUCK WHEELS (32 KIPS PER AXLE)
   b. HYDRANT PITS AND HPV/LPD PITS:
      - 250 PSF UNIFORM
      - 100 KIPS WHEEL LOAD @ 250 PSI TIRE PRESSURE
      - AIRCRAFT LOADING (B-52, C-17, KC-135, KC-46 OR BOEING 747-400)
   c. ISOLATION VALVE VAULT PLATFORMS:
      - ELEVATED PLATFORM - 60 PSF.
   d. ROLLING COVER:
      - ROOF - 20 PSF.
   e. SLABS ON GRADE: 250 PSF
4. SNOW LOADS
   a. GROUND SNOW LOAD: 0 PSF.
5. WIND LOADS
   a. BASIC DESIGN WIND SPEED (3-SEC GUST): 195 MPH
   b. ALLOWABLE STRESS DESIGN WIND SPEED (3-SEC GUST): 151 MPH
   c. SERVICEABILITY DESIGN WIND SPEED (3-SEC GUST, 10-YR MRI): 110 MPH
   d. EXPOSURE: C.
   e. TOPOGRAPHIC FACTOR: 1.0.
6. EARTHQUAKE LOADS
   a. MAPPED SPECTRAL RESPONSE ACCELERATION PARAMETERS Ss = 3.07, S1 = 0.66.
   b. SITE CLASS: C (VERY DENSE SOIL).
   c. DESIGN SPECTRAL RESPONSE ACCELERATION PARAMETERS Sds = 2.16, Sd1 = 0.63.
   d. SEISMIC DESIGN CATEGORY: D.
   e. IMPORTANCE FACTOR: 1.00.
   f. ANALYSIS PROCEDURE: EQUIVALENT LATERAL FORCE.
   g. FOR OTHER SEISMIC DESIGN PARAMETERS, SEE STRUCTURE SPECIFIC PLANS.

E. GEOTECHNICAL INFORMATION:
1. SOURCE: GEOTECHNICAL REPORT BY JACOBS DATED 31 DECEMBER 2025.
2. SITE PREPARATION
   a. PROVIDE EXCAVATION, SUBGRADE PREPARATION, PROBING AND GROUTING, FILL, AND BACKFILL IN ACCORDANCE WITH CONTRACT DRAWINGS AND SPECIFICATIONS, DIVISION 31.
   b. NOTIFY CONTRACTING OFFICER WHEN UNSUITABLE LOOSE OR SOFT SOILS ARE EXPOSED WHERE SLABS, MATS, OR FOOTINGS ARE TO BE PLACED SO THAT A DETERMINATION MAY BE MADE REGARDING IMPROVEMENT OF THIS POTENTIALLY UNDESIRABLE CONDITION.
3. SOIL CHARACTERISTICS
   a. UNIT WEIGHT: 125 PCF MOIST.
   b. FROST PENETRATION: 0".
   c. WATER TABLE DEPTH: NOT ENCOUNTERED DURING FIELD INVESTIGATIONS. ASSUME AT SURFACE FOR LATERAL EARTH PRESSURE AND BUOYANCY EFFECTS FOR PITS AND VAULTS.
4. LATERAL EARTH PRESSURE (ON SITE SOIL).
   a. AT-REST CONDITION, Ko: 0.42.
   b. ACTIVE CONDITION, Ka: 0.27.
   c. PASSIVE CONDITION, Kp: 3.69.
5. SLAB PERIMETER EDGE, MAT, AND FOOTING DESIGN PARAMETERS
   a. MODULUS OF SUBGRADE REACTION: 175 PCI BASED ON 1'X1' PLATE. (38 PCI FOR LARGE RIGID MAT)
   b. ALLOWABLE BEARING CAPACITIES
      1. GRAVITY LOADS: FOOTINGS = 5000 PSF
      2. TRANSIENT LOADS: AN INCREMENT OF 1/3 OF THE RECOMMENDED ALLOWABLE BEARING PRESSURES CAN BE CONSIDERED FOR SHORT TERM LOADS SUCH AS EARTHQUAKE AND SHORT TERM WIND LOADS.
   c. MINIMUM BEARING DEPTH: 36".
   d. CONCRETE-SOIL COEFFICIENT OF FRICTION: 0.40
6. DO NOT PLACE SOIL BACKFILL AGAINST STRUCTURES AND WALLS UNTIL THE WALLS HAVE BEEN CURED FOR A MINIMUM OF 7 DAYS AND HAVE REACHED 75% OF THE DESIGN STRENGTH. WHERE APPLICABLE, LIMIT THE DIFFERENTIAL HEIGHT OF THE SOIL BACKFILL ON EACH SIDE OF THE WALLS BELOW THE LOWEST FINISHED GRADE LEVEL TO 18" MAXIMUM DURING BACKFILLING PROCESS. ONLY COMPACT SOIL BACKFILL WITHIN 5'-0" OF THE WALLS USING LIGHT MANUALLY-OPERATED/WALK-BEHIND COMPACTORS.

F. MATERIALS: SEE CONTRACT SPECIFICATIONS FOR COMPLETE REQUIREMENTS AND COMPLY WITH APPLICABLE OSHA REGULATIONS
1. REINFORCED CONCRETE: SECTIONS 03 30 00
   a. PREPARE AND PLACE REINFORCED CONCRETE IN ACCORDANCE WITH ACI MANUAL OF CONCRETE PRACTICE AS MODIFIED BY CONTRACT DOCUMENTS.
   b. CONCRETE: NORMAL WEIGHT CONCRETE USING TYPE I (NORMAL) OR TYPE I/II PORTLAND CEMENT WITH MINIMUM, 28-DAY COMPRESSIVE STRENGTH (f'c) OF:
      1. ALL REINFORCED CONCRETE, UNLESS NOTED OTHERWISE: f'c = 5,000 PSI (MAX W/CM = 0.40)
      2. SIDEWALK, CURBS AND GUTTERS, ELECTRICAL DUCTBANKS : f'c = 3,500 PSI (MAX W/CM = 0.50)
      3. UNREINFORCED CONCRETE: f'c = 2,500 PSI (MAX W/CM = 0.60)
      4. USE CONCRETE WITH CRYSTALLINE WATERPROOFING ADMIXTURES FOR SECONDARY CONTAINMENT STRUCTURES, WHERE INDICATED, TO ENHANCE WATER-TIGHTNESS AND REDUCE PERMEABILITY.
   c. FORMWORK
      1. CONTRACTOR IS RESPONSIBLE FOR DESIGN, ENGINEERING, STRUCTURAL ADEQUACY, AND CONSTRUCTION OF CONCRETE FORMWORK IN ACCORDANCE WITH CONTRACT SPECIFICATIONS. PROVIDE FORM TIES WITH INTEGRAL WATER BARRIER PLATES FOR VAULT STRUCTURES.
      2. COORDINATE CONCRETE WORK WITH PLACEMENT OF PIPING, INSERTS, FLOOR DRAINS, AND OTHER EMBEDDED ITEMS INDICATED ON CONTRACT DRAWINGS OR IN CONTRACT SPECIFICATIONS.
      3. NEW OR EXISTING PIPING OR UTILITIES PASSING THROUGH NEW CONCRETE MUST BE ROUTED THROUGH PIPE SLEEVES, UNLESS NOTED OTHERWISE. SEE OTHER DISCIPLINE DRAWINGS FOR SLEEVE DETAILS. PROVIDE MEASURES TO ENSURE THAT SLEEVES REMAIN FREE OF DEBRIS AND WATER DURING CONSTRUCTION.
      4. PROVIDE 3/4" CHAMFER STRIPS ON EDGES OF EXPOSED CONCRETE, UNLESS NOTED OTHERWISE.
      5. FOOTINGS MAY BE EARTH-FORMED USING UNDISTURBED NATIVE SOIL. PROVIDE MINIMUM EXCAVATION WIDTH OF 4", AND A DEPTH OF 2" GREATER THAN THE STRUCTURE DIMENSION INDICATED.
   d. REINFORCING STEEL
      1. BARS: ASTM A615 GRADE 60 MEETING ACI 318 SECTION 20.2.2.5 REQUIREMENTS OR ASTM A706 GRADE 60.
      2. WELDED WIRE REINFORCEMENT: ASTM A1064. ONLY FLAT MAT GALVANIZED WELDED WIRE FABRIC MUST BE USED.
      3. REINFORCE ALL CONCRETE UNLESS SPECIFICALLY MARKED "NOT REINFORCED" OR "UNREINFORCED".
      4. DETAIL AND PLACE REINFORCEMENT IN ACCORDANCE WITH ACI SP-66, ACI 301, ACI 318, AND CRSI MANUAL OF STANDARD PRACTICE. DO NOT INSERT REINFORCEMENT INTO FRESH OR PARTIALLY HARDENED CONCRETE.
      5. PROVIDE MINIMUM CONCRETE CLEAR COVER OVER REINFORCEMENT AS FOLLOWS, UNLESS NOTED OTHERWISE:
         a. CONCRETE CAST AGAINST AND PERMANENTLY EXPOSED TO EARTH: 3".
         b. CONCRETE EXPOSED TO EARTH OR WEATHER: 2"
      6. CONFORM EMBEDMENT AND LAP SPLICE LENGTHS TO TABLES AND DETAILS ON CONTRACT DRAWINGS, UNLESS NOTED OTHERWISE.
      7. PROVIDE ADDITIONAL REINFORCEMENT AT OPENINGS AND CORNER BARS AT INTERSECTING GRADE BEAMS, WALLS, AND CURBS IN ACCORDANCE WITH TYPICAL DETAILS ON CONTRACT DRAWINGS, UNLESS NOTED OTHERWISE.
   e. JOINTS
      1. LOCATE JOINTS AS INDICATED OR SPECIFIED, OR AS OTHERWISE APPROVED BY CONTRACTING OFFICER.
      2. WHERE ROUGHENED JOINT IS INDICATED, PROVIDE A MECHANICALLY ROUGHENED CONCRETE SURFACE WITH A MINIMUM OF 1/4" AMPLITUDE. ALTERNATIVELY, A CONTINUOUS FORMED KEYWAY 3 1/2" WIDE X 1 1/2" DEEP MAY BE PROVIDED UPON APPROVAL OF CONTRACTING OFFICER.
      3. CLEAN SURFACES OF HORIZONTAL AND VERTICAL CONSTRUCTION JOINTS OF LAITANCE TO EXPOSE CLEAN COARSE AGGREGATE SOLIDLY EMBEDDED IN MORTAR MIX. JUST PRIOR TO DEPOSITING CONCRETE, CLEAN AND WET SURFACE OF CONSTRUCTION JOINT.
      4. IN ADDITION, WHEN NEW CONCRETE IS PLACED AGAINST EXISTING CONCRETE, ADEQUATELY PREPARE SURFACE BY APPLYING BONDING AGENT.
      5. PROVIDE FUEL-RESISTANT WATERSTOPS AT ALL CONCRETE JOINTS UNLESS INDICATED OTHERWISE.
      6. ROUND DOWELS FOR USE AT JOINTS MUST BE ASTM A615 GRADE 60 SMOOTH ROUND BARS WITH ASTM A1078 TYPE 1 FACTORY APPLIED EPOXY COATING. SAW CUT ENDS SQUARE AND REMOVE BURRS PRIOR TO COATING.
   f. WHERE NECESSARY OR INDICATED ON THE DRAWINGS, PROVIDE CONCRETE HOUSEKEEPING PADS FOR MECHANICAL/ELECTRICAL EQUIPMENT PER DETAIL ON SF501.
   g. PENETRATIONS (CONDUIT, CABLE, PIPES) THROUGH CONTAINMENT SLABS AND WALLS MUST BE LOCATED A MINIMUM OF 8" AWAY FROM JOINTS.
   h. CONSTRUCT CONCRETE SLABS AND WALLS IN SECONDARY CONTAINMENT AREAS FREE OF CRACKS. TAKE MEASURES (BY USE OF MATERIALS, PLACEMENT TECHNIQUES AND CURING METHODS) TO PREVENT CRACK FORMATIONS IN THESE STRUCTURES. UNLESS ACCEPTED AS-IS BY THE CONTRACTING OFFICER, REPAIR VISIBLE CRACKS USING METHODS APPROVED BY THE CONTRACTING OFFICER.

F. MATERIALS (CONTINUED):
2. STRUCTURAL AND MISCELLANEOUS STEEL: SECTION 05 50 13
   a. FABRICATE AND ERECT STRUCTURAL AND MISCELLANEOUS STEEL IN ACCORDANCE WITH AISC STEEL CONSTRUCTION MANUAL, 15th EDITION AND AISC 303-16 - CODE OF STANDARD PRACTICE FOR STEEL BUILDINGS AND BRIDGES, AS MODIFIED BY CONTRACT DOCUMENTS.
   b. MATERIAL: AS INDICATED UNLESS NOTED OTHERWISE
      1. CARBON STEEL WIDE FLANGE AND WT SECTIONS: ASTM A992, Fy = 50 KSI
      2. CARBON STEEL PLATES AND OTHER SHAPES: ASTM A36, Fy = 36 KSI
      3. CARBON STEEL TUBES/HSS: ASTM A1085, Fy = 50 KSI
      4. CARBON STEEL ROUND PIPES: ASTM A53 TYPE E OR S, GRADE B, Fy = 35 KSI
      5. STAINLESS STEEL WIDE FLANGES AND ANGLES: ASTM A484 TYPE 316L, Fy = 25 KSI
      6. STAINLESS STEEL BARS/SHAPES: ASTM A240 OR A276 TYPE 316L, Fy = 25 KSI
      7. STAINLESS STEEL HSS RECTANGULAR TUBE: ASTM A554, GR MT-316L, Fy = 25 KSI
      8. STAINLESS STEEL ROUND PIPES: ASTM A554, GR MT-316L, Fy = 25 KSI
      9. ANCHOR RODS: STAINLESS STEEL ASTM F593 GROUP 2 CONDITION A TYPE 316L (25 KSI YIELD STRENGTH)
      10. HEADED STUDS: STAINLESS STEEL ASTM A276 TYPE 316L.
   c. STRUCTURAL BOLTS:
      1. 3/4" DIAMETER, UNLESS NOTED OTHERWISE.
      2. BOLTS: HEX HEAD. CARBON STEEL ASTM A307 GRADE A. STAINLESS STEEL ASTM F593 GROUP 2 CONDITION A, TYPE 316L.
      3. NUTS: HEAVY HEX. CARBON STEEL ASTM A563 GRADE A. STAINLESS STEEL ASTM F594, TYPE 316L.
      4. WASHERS: CARBON STEEL ASTM F436 TYPE 1. STAINLESS STEEL TYPE 316L.
      5. ALL STRUCTURAL STEEL CONNECTIONS MUST BE SNUG-TIGHTENED IN STANDARD HOLES, UNLESS INDICATED OTHERWISE.
   d. PERFORM WELDING IN ACCORDANCE WITH AWS D1.1 USING E70 ELECTRODES FOR CARBON STEEL AND AWS D1.6 USING E316L-XX ELECTRODES FOR STAINLESS STEEL. PROVIDE SEAL WELDS ALONG PERIMETER OF COMPONENTS WELDED TO MEMBERS TO BE INSTALLED OUTDOORS TO PREVENT CORROSION IN JOINT CREVICES.
   e. ANCHOR RODS
      1. LOCATE ANCHOR RODS ACCURATELY, SET WITH TEMPLATES, AND SECURELY HOLD IN POSITION WHILE PLACING CONCRETE. PROTECT IN-PLACE ANCHOR RODS FROM CONSTRUCTION ACTIVITY.
      2. THE FOLLOWING ARE PROHIBITED WITHOUT EXPLICIT PRIOR APPROVAL IN WRITING FROM CONTRACTING OFFICER:
         a. INSERTING ANCHOR RODS INTO FRESH OR PARTIALLY HARDENED CONCRETE.
         b. SUBSTITUTING POST-INSTALLED ANCHORS WHERE EMBEDDED ANCHOR RODS ARE INDICATED. REPAIRING, REPLACING, OR MODIFYING INSTALLED ANCHOR ROD.
      3. EMBEDDED ANCHOR BOLTS MUST BE INSTALLED WITHIN THE FOLLOWING MAXIMUM TOLERANCES, UNLESS MORE STRINGENT CRITERIA IS NOTED ELSEWHERE:
         a. 1/8" BETWEEN ANCHOR BOLT CENTERLINES WITHIN A GROUP.
         b. 1/4" BETWEEN THE CENTERS OF ADJACENT ANCHOR BOLT GROUPS.
         c. 1/2" VARIATION IN THE TOP OF ANCHOR BOLTS.
         d. 1/4" PER 100'-0", BUT NOT TO EXCEED 1" TOTAL IN ACCUMULATED VARIATION IN DIMENSION BETWEEN CENTERS OF ANCHOR BOLT GROUPS ALONG A COLUMN LINE.
         e. 1/4" VARIATION IN THE CENTER OF ANCHOR BOLT GROUP TO THE COLUMN CENTERLINE FOR THAT GROUP POST-INSTALLED ANCHORS
      1. PROVIDE ANCHORS OF INDICATED TYPE WITH CAPACITIES ADEQUATE FOR INDICATED SHEAR AND TENSION LOADS ACTING SIMULTANEOUSLY BASED ON ACTUAL SUBSTRATE MATERIAL, EMBEDMENT LENGTH, EDGE DISTANCE, AND SPACING. SUBMIT PRODUCT DATA AND CALCULATIONS NOT LESS THAN 30 DAYS PRIOR TO INSTALLATION.
      2. PROVIDE ANCHORS INTO CONCRETE THAT ARE APPROVED AND DESIGNED FOR INSTALLATION IN CRACKED CONCRETE, UNLESS NOTED OTHERWISE.
      3. LOCATE ANCHORS IN EXISTING CONCRETE OR MASONRY TO AVOID EXISTING REINFORCEMENT, AND ARRANGE REINFORCEMENT IN NEW CONCRETE OR MASONRY TO AVOID ANCHOR LOCATIONS. DO NOT DAMAGE REINFORCEMENT WITHOUT APPROVAL OF CONTRACTING OFFICER'S REPRESENTATIVE.
      4. IF GROUT, FLOOR TOPPING, OR CONSTRUCTION JOINT IS PRESENT WITHIN EMBEDMENT LENGTH OF ANCHOR IN CONCRETE, PROVIDE FULL EMBEDMENT LENGTH BEYOND INTERFACE.
   f. POST-INSTALLED MECHANICAL ANCHORS
      1. STAINLESS STEEL TYPE 316L MANUALLY EXPANDED WEDGE TYPE, UNLESS NOTED OTHERWISE.
      2. PROVIDE ANCHORS THAT HAVE BEEN TESTED AND ASSESSED IN ACCORDANCE WITH LATEST EDITION OF APPLICABLE ACCEPTANCE CRITERIA AND SUBMIT CORRESPONDING ICC EVALUATION SERVICE REPORTS
         a. MECHANICAL ANCHORS IN CONCRETE: ICC-ES AC193.
         b. PROJECT WAS DESIGNED BASED ON ESR-4266. THIS IN NO WAY SHOULD BE INTERPRETED AS SPECIFYING ANY PARTICULAR MANUFACTURER'S PRODUCT. PRODUCTS OF OTHER MANUFACTURERS THAT OTHERWISE MEET THE RFP REQUIREMENTS ARE ACCEPTABLE.
   g. POST-INSTALLED ADHESIVE ANCHORS
      1. STAINLESS STEEL TYPE 316L THREADED ROD WITH EPOXY OR HYBRID RESIN ADHESIVE, UNLESS NOTED OTHERWISE.
      2. DO NOT USE BULK-MIXED ADHESIVES. PROVIDE THREADED ROD COMPATIBLE WITH ADHESIVE AND ACCEPTABLE TO MANUFACTURER.
      3. PROVIDE ANCHORS AS ENTIRE SYSTEM INCLUDING, BUT NOT LIMITED TO, MANUFACTURER'S PRINTED INSTRUCTIONS AS FURNISHED WITH ADHESIVE, ADHESIVE CARTRIDGE, MIXING NOZZLE, EXTENSION TUBE, DISPENSER, AND REQUIRED EQUIPMENT FOR CLEANING DRILLED HOLE.
      4. PROVIDE ANCHOR SYSTEMS THAT HAVE BEEN TESTED AND ASSESSED IN ACCORDANCE WITH LATEST EDITION OF APPLICABLE ACCEPTANCE CRITERIA AND SUBMIT CORRESPONDING ICC EVALUATION SERVICE REPORTS.
         a. ADHESIVE ANCHORS IN CONCRETE: ICC-ES AC308.
         b. PROJECT WAS DESIGNED BASED ON ESR-3187. THIS IN NO WAY SHOULD BE INTERPRETED AS SPECIFYING ANY PARTICULAR MANUFACTURER'S PRODUCT. PRODUCTS OF OTHER MANUFACTURERS THAT OTHERWISE MEET THE RFP REQUIREMENTS ARE ACCEPTABLE.

SYM	DESCRIPTION	DATE

NAVFAC

STATE OF MISSOURI
A. HASSAN BAHOUTH
NUMBER E-25085
REGISTERED PROFESSIONAL ENGINEER
01/13/2026
SEAL

Jacobs / BURNS McDONNELL
JACOBS/B&M, A JOINT VENTURE
1100 NORTH GLEBE ROAD
SUITE 500
ARLINGTON, VA 22201
A/E Contract No. N62470-20-D-0002
A/E Task Order No. N6247421F0315
JKO NO. 2343003
A/E INFO

APPROVED
FOR COMMANDER NAVFAC DATE 02/02/2026

ACTIVITY
AFIMSC APPROVAL PER NAVFAC SAT-TO CHECKLIST

SATISFACTORY TO DATE 31 DEC 2025

DES: AHS	DRW: MKP	REV: JMH	
PM/DM	KKK		
BRANCH MANAGER	SMK		
CHIEF ENG/ARCH	SMK		
FIRE PROTECTION	RO		

DEPARTMENT OF THE NAVY
NAVAL FACILITIES ENGINEERING SYSTEMS COMMAND
NAVFAC PACIFIC
NAVAL FACILITIES ENGINEERING SYSTEMS COMMAND ~ PACIFIC
JOINT REGION MARIANAS (JRM)
ANDERSEN AIR FORCE BASE
GUAM

FY24 AUY183012 (P-012),
PDI: NORTH AIRCRAFT PARKING RAMP

STRUCTURAL GENERAL NOTES - SHEET 1

SCALE: AS SHOWN
EPROJECTS NO.: 1665555
CONSTR CONTROL NO.
NAVFAC DRAWING NO. 17361955
SHEET 332 OF 377
SF001

REDESIGN FINAL SUBMITTAL

IF SHEET IS LESS THAN 22" X 34"
REDUCED PRINT. USE GRAPHIC SCALES

FILE NAME: C:\Revit_Projects\P012-1665555-SSF-3D_mpatel@burnsmcd.com.rvt
LAYOUT NAME: STRUCTURAL GENERAL NOTES - SHEET 1
PLOTTED: 1/13/2026 3:01:07 PM
USER: MKP

STRUCTURAL GENERAL NOTES (FOR FUEL FACILITIES):

F. MATERIALS (CONTINUED):

2. STRUCTURAL AND MISCELLANEOUS STEEL: SECTION 05 50 13 (CONTINUED)
   - h. POST-INSTALLED ANCHORS MUST ONLY BE INSTALLED BY PERSONNEL TRAINED BY THE ANCHOR MANUFACTURER.
   - i. GROUT: ASTM C1107 CEMENTITIOUS NON-SHRINK, NON-METALLIC.
   - j. UNLESS NOTED OTHERWISE, EXTERIOR STEEL MUST BE STAINLESS STEEL.
   - k. WHERE USED, CARBON STEEL MUST BE HOT-DIPPED GALVANIZED IN ACCORDANCE WITH THE FOLLOWING:
     1. STRUCTURAL STEEL: ASTM A123
     2. STEEL HARDWARE: ASTM A153
     3. THREADED PARTS: ASTM F2329
   - l. BAR GRATING: SECTION 05 50 13
     1. FABRICATE AND INSTALL BAR GRATING IN ACCORDANCE WITH NAAMM MANUAL AS MODIFIED BY CONTRACT DOCUMENTS.
     2. MATERIAL: 6063 OR 6061 ALUMINUM ALLOY, UNLESS NOTED OTHERWISE.
     3. CONSTRUCTION: SWAGE-LOCKED.
     4. MAIN BEARING BARS:
        - A. PLATFORM GRATING - 1 1/2" X 3/16"
        - B. SUMP GRATING - 1" X 3/16"
     5. CROSS BARS: AT 4" CENTERS.
     6. SURFACE: SMOOTH, UNLESS NOTED OTHERWISE.
     7. FABRICATE GRATING IN SECTIONS NOT GREATER THAN 5'-0" WIDE, UNLESS INDICATED OTHERWISE.
     8. PROVIDE MINIMUM 1/2" AND MAXIMUM 2" GAP AT PENETRATIONS IN THE GRATING. BAND EDGES AND OPENINGS.
   - m. REFER TO MECHANICAL AND ELECTRICAL DRAWINGS FOR MISCELLANEOUS STEEL NOT INCLUDED SUBMITTED FOR REVIEW AND APPROVAL.
3. DAMPPROOFING: SECTION 07 11 13
   - a. APPLY TWO COATS (30 MIL MINIMUM EACH) OF COLD-APPLIED ASPHALT DAMPPROOFING MATERIAL IN ACCORDANCE WITH THE MANUFACTURER'S RECOMMENDATION.
   - b. UNLESS INDICATED OTHERWISE, EXTEND COATING 12" MINIMUM BELOW THE TOP OF THE BASE SLAB.
   - c. REINFORCE EDGES AND CORNERS WITH A LAYER OF GLASS FABRIC REINFORCEMENT IN THE FIRST COAT OF THE DAMPPROOFING COMPOUND BEFORE IT THICKENS. GLASS FABRIC REINFORCEMENT MUST EXTEND A MINIMUM OF 12" ON EACH SIDE OF EDGES AND CORNERS.
   - d. PROVIDE GEOTEXTILE FABRIC OVER THE DAMPPROOFING COATING AS PROTECTIVE COVERING.

SYM	DESCRIPTION	DATE

NAVFAC

STATE OF MISSOURI
A. HASSAN BAHUDDIN
NUMBER E-25085
REGISTERED PROFESSIONAL ENGINEER
01/13/2026
SEAL

Jacobs / BURNS McDONNELL
JACOBS/B&M, A JOINT VENTURE
1100 NORTH GLEBE ROAD
SUITE 500
ARLINGTON, VA 22201
A/E Contract No. N62470-20-D-0002
A/E Task Order No. N62742F19315
JKO NO. 204/3803
A/E INFO

APPROVED
FOR COMMANDER NAVFAC DATE 02/02/2026

ACTIVITY
AFIMSC APPROVAL PER NAVFAC SAT-TO CHECKLIST

SATISFACTORY TO DATE 31 DEC 2025

DES: AHS	DRW: MKP	REV: JMH

PM/DM	KKK
BRANCH MANAGER	SMK
CHIEF ENG/ARCH	SMK
FIRE PROTECTION	RO

DEPARTMENT OF THE NAVY
NAVAL FACILITIES ENGINEERING SYSTEMS COMMAND
NAVFAC PACIFIC
NAVAL FACILITIES ENGINEERING SYSTEMS COMMAND – PACIFIC
JOINT REGION MARIANAS (JRM)
ANDERSEN AIR FORCE BASE
GUAM

FY24 AUY183012 (P-012),
PDI: NORTH AIRCRAFT PARKING RAMP

STRUCTURAL GENERAL NOTES - SHEET 2

SCALE: AS SHOWN
EPROJECTS NO.: 1665555
CONSTR CONTROL NO.
NAVFAC DRAWING NO. 17361956
SHEET 333 OF 377
SF002

REDESIGN FINAL SUBMITTAL

FILE NAME: C:\Revit_Projects\P012-1665555-SSF-3D_mpatel@burnsmcd.com.rvt
LAYOUT NAME: STRUCTURAL GENERAL NOTES - SHEET 2
PLOTTED: 1/13/2026 3:01:07 PM
USER: MKP

IF SHEET IS LESS THAN 22" X 34"
REDUCED PRINT. USE GRAPHIC SCALES

STRUCTURAL ABBREVIATIONS:

#	NUMBER OR POUND(S)
%	PERCENT
&	AND
@	AT
AB	ANCHOR BOLT
ADDL	ADDITIONAL
ADJ	ADJACENT
AFF	ABOVE FINISH FLOOR
AGGR	AGGREGATE
AHJ	AUTHORITY HAVING JURISDICTION
AHR	ANCHOR(S)
ALT	ALTERNATE
ALUM	ALUMINUM
APPD	APPROVED
APPROX	APPROXIMATE
ARCH	ARCHITECT(URAL)
BC	BOLT CIRCLE
BFF	BELOW FINISH FLOOR
BLDG	BUILDING
BM	BEAM
BOC	BOTTOM OF CONCRETE
BOS	BOTTOM OF STEEL
BOT	BOTTOM
BRCG	BRACING
BRDG	BRIDGING
BRG	BEARING
BTWN	BETWEEN
C TO C	CENTER TO CENTER
CIP	CAST-IN-PLACE
CIR	CIRCLE
CJ	CONSTRUCTION JOINT
CJP	COMPLETE JOINT PENETRATION
CL	CENTER LINE
CLJ	CONTROL JOINT
CLL	COLUMN LINE
CLR	CLEAR
CMU	CONCRETE MASONRY UNIT
CNR	CORNER
COL	COLUMN
CONC	CONCRETE
CONN	CONNECTION
CONSTR	CONSTRUCTION
CONT	CONTINUOUS
CONTR	CONTRACTOR
COORD	COORDINATE
CTJ	CONTRACTION JOINT
CTR	CENTER(ED)
CY	CUBIC YARD(S)
D	DEEP (DEPTH)
DBL	DOUBLE
DEG	DEGREE(S)
DEMO	DEMOLISH (DEMOLITION)
DET	DETAIL
DIA	DIAMETER
DIAG	DIAGONAL
DIM	DIMENSION
DIR	DIRECTION
DIV	DIVISION
DL	DEAD LOAD
DWG	DRAWING
DWL	DOWEL
E	EAST
EA	EACH
ED	EDGE DETAIL
EF	EACH FACE
EJ	EXPANSION JOINT
EL	ELEVATION
ELEC	ELECTRICAL
ELEV	ELEVATOR
EMBED	EMBEDMENT
ENGR	ENGINEER
EOD	EDGE OF DECK
EOS	EDGE OF SLAB
EQ	EQUAL
EQUIP	EQUIPMENT
EQUIV	EQUIVALENT
ETC	AND SO FORTH
EW	EACH WAY
EXP	EXPANSION
EXST	EXISTING
EXT	EXTERIOR OR EXTERNAL
EXTN	EXTENSION
FAB	FABRICATE
FD	FLOOR DRAIN
FDTN	FOUNDATION
FF	FAR FACE
FIN	FINISH
FLG	FLANGE
FLR	FLOOR
FR	FRAME
FRMG	FRAMING
FRP	FIBER-REINFORCED POLYMER
FS	FAR SIDE
FT	FOOT (FEET)
FTG	FOOTING
FUT	FUTURE
GA	GAGE
GALV	GALVANIZE(D)
GB	GRADE BEAM
GC	GENERAL CONTRACTOR
GEN	GENERAL
GOVT	GOVERNMENT
GR	GRADE
GRTG	GRATING
H	HIGH (HEIGHT)
HC	HOLLOW CORE
HORIZ	HORIZONTAL
HP	HIGH POINT
HPV	HIGH POINT VENT
ID	INSIDE DIAMETER
IF	INSIDE FACE
IJ	ISOLATION JOINT
IN	INCH(ES)
INFO	INFORMATION
INT	INTERIOR
INV	INVERT
IR	INSIDE RADIUS
IVV	ISOLATION VALVE VAULT
JST	JOIST
JT	JOINT
KB	KNEE BRACE
KIP	THOUSAND POUNDS
KLF	KIP(S) PER LINEAR FOOT
KPL	KICK PLATE
KSF	KIP(S) PER SQUARE FOOT
KSI	KIP(S) PER SQUARE INCH
L	ANGLE SHAPE OR LENGTH
LBS	POUND(S)
LG	LONG
LL	LIVE LOAD
LLH	LONG LEG HORIZONTAL
LLO	LONG LEG OUTSTANDING
LLV	LONG LEG VERTICAL
LOC	LOCATION(S)
LONG	LONGITUDINAL
LP	LOW POINT
LPD	LOW POINT DRAIN
LSL	LONG-SLOT HOLE(S)
MATL	MATERIAL
MAX	MAXIMUM
MECH	MECHANICAL
MEZZ	MEZZANINE
MFR	MANUFACTURER
MIN	MINIMUM
MISC	MISCELLANEOUS
MSL	MEAN SEA LEVEL
MTL	METAL
N	NORTH
NA	NOT APPLICABLE
NF	NEAR FACE
NIC	NOT IN CONTRACT
NO	NUMBER
NOM	NOMINAL
NS	NEAR SIDE
NTS	NOT TO SCALE
NW	NORTHWEST
OC	ON CENTER
OD	OUTSIDE DIAMETER
OF	OUTSIDE FACE
OPNG	OPENING
OPP	OPPOSITE
OR	OUTSIDE RADIUS
OVS	OVERSIZE HOLE(S)
PAR	PARALLEL
PCF	POUND(S) PER CUBIC FOOT
PCI	POUND(S) PER CUBIC INCH
PED	PEDESTAL
PERP	PERPENDICULAR
PL	PLATE
PLC	PLACE(S)
PLF	POUND(S) PER LINEAR FOOT
PREFAB	PREFABRICATE(D)
PREP	PREPARATION
PS	PIPE SUPPORT
PSF	POUND(S) PER SQUARE FOOT
PSI	POUND(S) PER SQUARE INCH
PVC	POLYVINYL CHLORIDE
QA	QUALITY ASSURANCE
QC	QUALITY CONTROL
R	RADIUS OR RISER(S)
RD	ROOF DRAIN
REBAR	REINFORCING STEEL BAR(S)
REF	REFERENCE
REINF	REINFORCE(D)
REQD	REQUIRED
REV	REVISION
RST	REINFORCING STEEL
SC	SLIP-CRITICAL JOINT
SCHED	SCHEDULE
SECT	SECTION
SF	SWAY FRAME
SHT	SHEET
SIM	SIMILAR
SLO	SHORT LEG OUTSTANDING
SLV	SLEEVE
SP	SPACE(S)
SPEC	SPECIFICATION(S)
SQ	SQUARE
SSL	SHORT-SLOT HOLE(S)
SST	STAINLESS STEEL
STD	STANDARD
STIF	STIFFENER
STIR	STIRRUP
STL	STEEL
STR	STRAIGHT
STRUCT	STRUCTURAL
SYMM	SYMMETRICAL
T	TON(S) OR TREAD(S)
T&B	TOP AND BOTTOM
TEMP	TEMPORARY
THD	THREAD(ED)
THK	THICK(NESS)
THRU	THROUGH
TOC	TOP OF CONCRETE
TOM	TOP OF MASONRY
TOS	TOP OF STEEL
TOW	TOP OF WALL
TYP	TYPICAL
UNO	UNLESS NOTED OTHERWISE
VAR	VARIES
VERT	VERTICAL
W/	WITH
W/O	WITHOUT
WL	WIND LOAD
WP	WORKING POINT
WS	WATERSTOP
WT	WEIGHT

SECTION, DETAIL, AND ELEVATION IDENTIFICATION SYSTEM

SECTION/DETAIL CALLOUT EXAMPLE

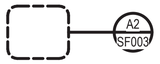

DETAIL CALLOUT EXAMPLE

ELEVATION CALLOUT EXAMPLE

ONE OR TWO CHARACTER DISCIPLINE DESIGNATOR (MAY NOT BE PRESENT IF CALLOUT AND TITLE ARE ON DRAWINGS WITHIN THE SAME DISCIPLINE)

LETTER-NUMBER DESIGNATOR INDICATES SHEET COORDINATES WHERE TITLE IS LOCATED

DRAWING SEQUENCE NUMBER INDICATES WHERE TITLE IS LOCATED (MAY NOT BE PRESENT IF CALLOUT AND TITLE ARE ON THE SAME DRAWING)

SECTION, DETAIL, AND ELEVATION SYMBOL IDENTIFIERS

THE WORD "DETAIL" MAY BE REPLACED WITH "ELEVATION" OR "SECTION"

A2 DETAIL
SCALE: 12" = 1'-0"

SECTION, DETAIL, OR ELEVATION TITLE EXAMPLE

MATERIAL SYMBOLS:

UNDISTURBED EARTH/ COMPACTED BACKFILL

CAST CONCRETE

STEEL

CAPILLARY WATER BARRIER OR AGGREGATE BASE COURSE

GROUT OR PRECAST CONCRETE

CONCRETE MASONRY UNIT

ROCK OR COMPACTED FILL FOR STRUCTURAL USE

ASPHALT

NOTE:
FOR DRAWING CLARITY, SYMBOLS MAY BE OMITTED.

SYM	DESCRIPTION	DATE

NAVFAC

STATE OF MISSOURI
A. HASSAN BAHUDDIN
NUMBER E-25085
REGISTERED PROFESSIONAL ENGINEER
01/13/2026
SEAL

Jacobs / BURNS McDONNELL
JACOBS/B&M, A JOINT VENTURE
1100 NORTH GLEBE ROAD
SUITE 500
ARLINGTON, VA 22201
A/E Contract No. N62470-20-D-0002
A/E Task Order No. N62742-19-1015
JKO NO. 2DA30803
A/E INFO

APPROVED
FOR COMMANDER NAVFAC DATE 02/02/2026

ACTIVITY
AFIMSC APPROVAL PER NAVFAC SAT-TO CHECKLIST

SATISFACTORY TO DATE 31 DEC 2025

DES: AHS	DRW: MKP	REV: JMH

PM/DM	KKK
BRANCH MANAGER	SMK
CHIEF ENG/ARCH	SMK
FIRE PROTECTION	RO

DEPARTMENT OF THE NAVY
NAVAL FACILITIES ENGINEERING SYSTEMS COMMAND
NAVFAC PACIFIC
NAVAL FACILITIES ENGINEERING SYSTEMS COMMAND ~ PACIFIC
JOINT REGION MARIANAS (JRM)
ANDERSEN AIR FORCE BASE
GUAM

FY24 AJJY183012 (P-012),
PDI: NORTH AIRCRAFT PARKING RAMP

LEGENDS AND ABBREVIATIONS

SCALE: AS SHOWN
EPROJECTS NO.: 1665555
CONSTR CONTROL NO.
NAVFAC DRAWING NO. 17361957
SHEET 334 OF 377

SF003

REDESIGN FINAL SUBMITTAL

IF SHEET IS LESS THAN 22" X 34" REDUCED PRINT. USE GRAPHIC SCALES

FILE NAME: C:\Revit_Projects\P012-1665555-SSF-3D_mpatel@burnsmcd.com.rvt
LAYOUT NAME: LEGENDS AND ABBREVIATIONS
PLOTTED: 1/13/2026 3:01:08 PM
USER: MKP

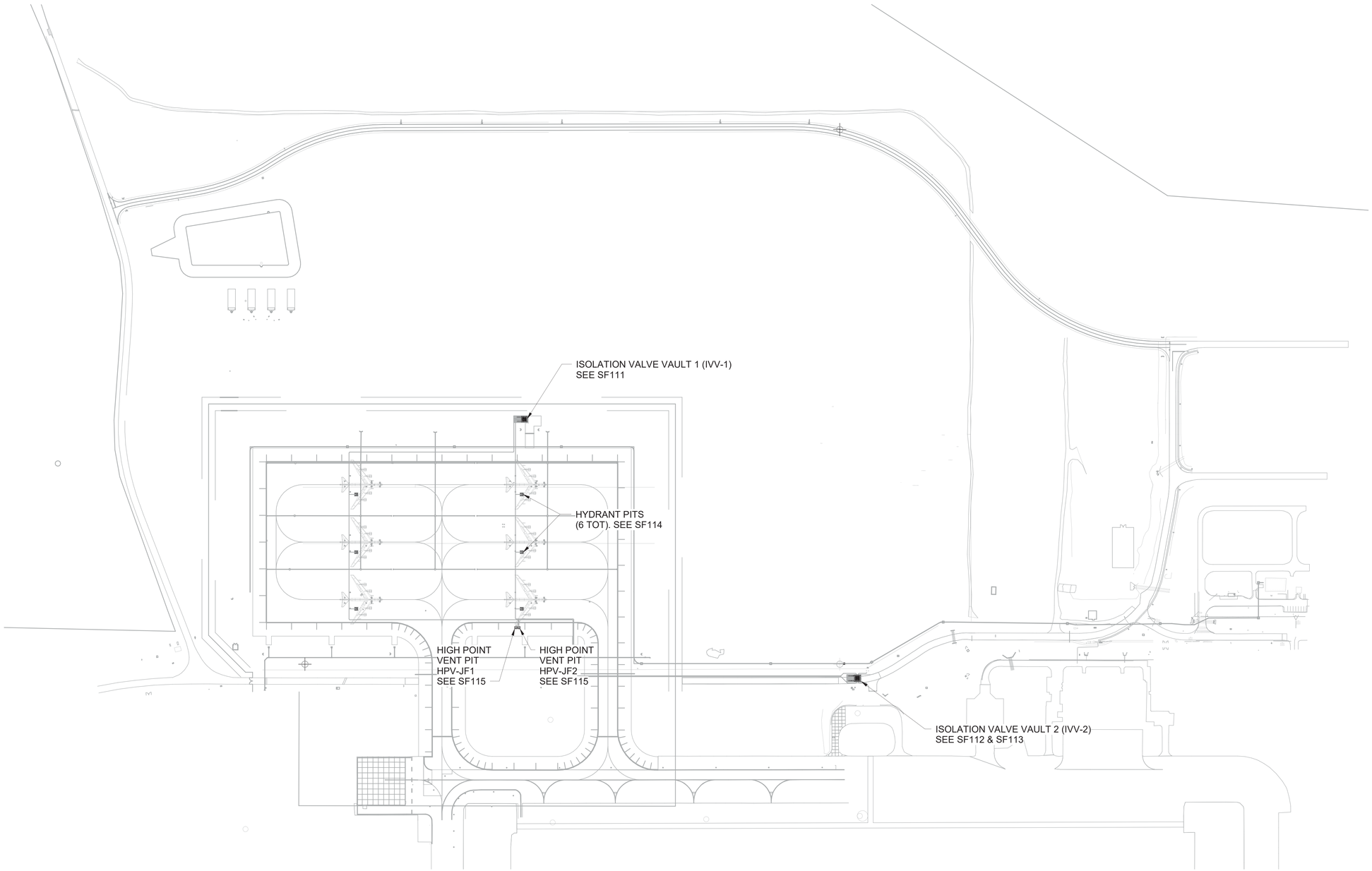

A1 OVERALL STRUCTURAL LAYOUT PLAN
SCALE: 1" = 200'

GRAPHIC SCALE

0 100' 200' 400'

SCALE: 1"=200'

NORTH ARROW

TRUE N

IF SHEET IS LESS THAN 22" X 34"
REDUCED PRINT. USE GRAPHIC SCALES

SYM	DESCRIPTION	DATE

NAVFAC

STATE OF MISSOURI
A. HASSAN BAHUDDIN
NUMBER E-25085
REGISTERED PROFESSIONAL ENGINEER
01/13/2026
SEAL

Jacobs / BURNS McDONNELL

JACOBS/B&M, A JOINT VENTURE
1100 NORTH GLEBE ROAD
SUITE 500
ARLINGTON, VA 22201

A/E Contract No. N62742-20-D-0002
A/E Task Order No. N62742-21F0315
JEG NO. 224/30003

A/E INFO

APPROVED
Evan Moyer
FOR COMMANDER NAVFAC DATE 02/02/2026

ACTIVITY
AFIMSC APPROVAL PER NAVFAC SAT-TO CHECKLIST

SATISFACTORY TO DATE 31 DEC 2025

DES:	AHS	DRW: MKP	REV: JMH
PM/DM			KKK
BRANCH MANAGER			SMK
CHIEF ENG/ARCH			SMK
FIRE PROTECTION			RO

DEPARTMENT OF THE NAVY
NAVAL FACILITIES ENGINEERING SYSTEMS COMMAND
NAVFAC PACIFIC
NAVAL FACILITIES ENGINEERING SYSTEMS COMMAND ~ PACIFIC
JOINT REGION MARIANAS (JRM)
ANDERSEN AIR FORCE BASE
GUAM

FY24 AJJY183012 (P-012),
PDI: NORTH AIRCRAFT PARKING RAMP

OVERALL STRUCTURAL LAYOUT

SCALE: AS SHOWN
EPROJECTS NO.: 1665555
CONSTR CONTROL NO.
NAVFAC DRAWING NO. 17361958
SHEET 335 OF 377

SF101

REDESIGN FINAL SUBMITTAL

FILE NAME: C:\Revit_Projects\P012-1665555-SSF-3D_mpatel@burnsmcd.com.rvt
LAYOUT NAME: OVERALL STRUCTURAL LAYOUT
PLOTTED: 1/13/2026 3:01:08 PM
USER: MKP

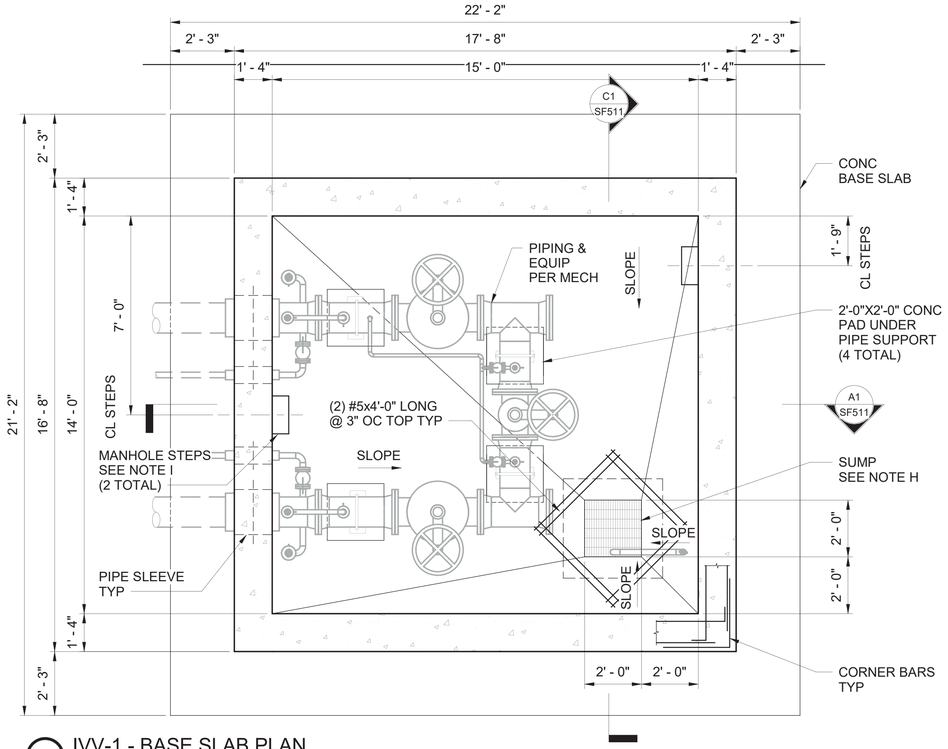

B1 IVV-1 - BASE SLAB PLAN
SCALE: 3/8" = 1'-0"

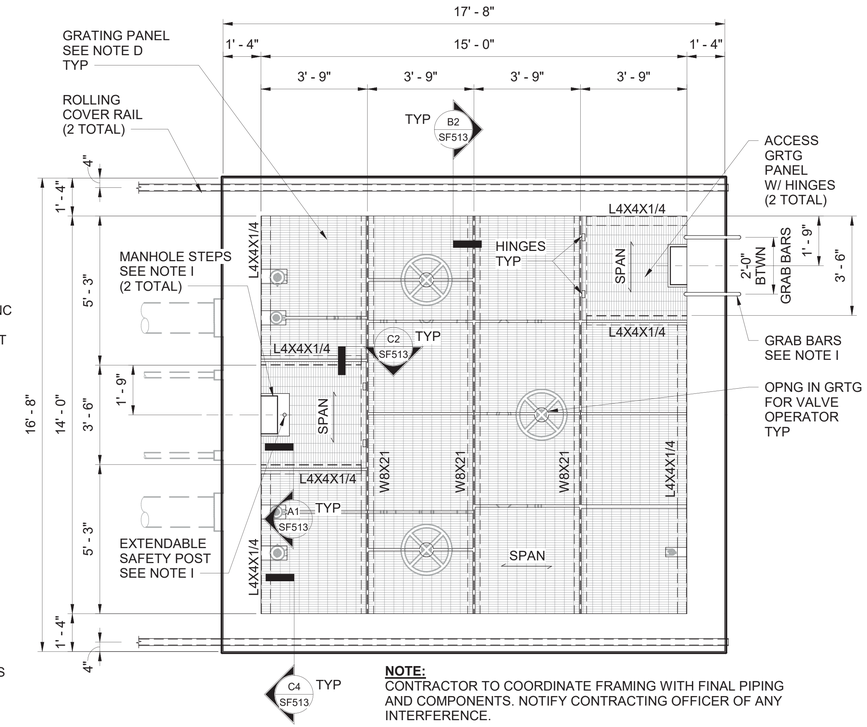

NOTE:
CONTRACTOR TO COORDINATE FRAMING WITH FINAL PIPING AND COMPONENTS. NOTIFY CONTRACTING OFFICER OF ANY INTERFERENCE.

B3 IVV-1 - PLATFORM FRAMING PLAN
SCALE: 3/8" = 1'-0"

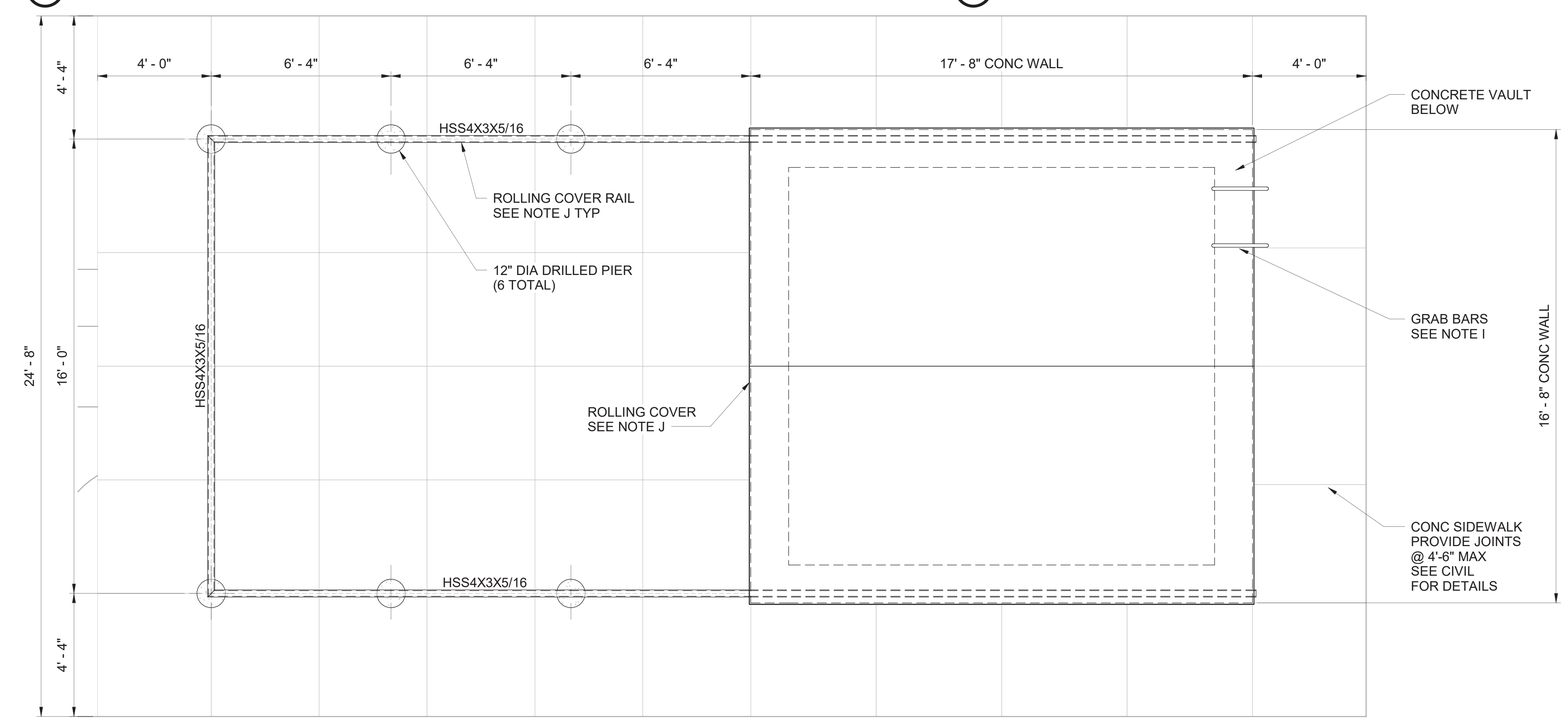

A1 IVV-1 - ROLLING COVER PLAN
SCALE: 3/8" = 1'-0"

SHEET NOTES

A. SEE SF001 AND SF002 FOR STRUCTURAL GENERAL NOTES.
B. SEE CIVIL FOR LOCATION AND ORIENTATION OF VAULT.
C. ELEVATIONS INDICATED FOR THE VAULT EQUAL THE DATUM ELEVATIONS SHOWN ON THE CIVIL DRAWINGS.
D. PROVIDE PLATFORM BAR GRATING THAT CONFORMS TO THE GENERAL NOTES ON SF002 AND TO THE FOLLOWING REQUIREMENTS:
   1. GRATING ATTACHMENT TO BEAM CONFIGURATION MUST ALLOW FUTURE REMOVAL OF EACH GRATING PANEL WITHOUT NEEDING TO REMOVE EQUIPMENT.
   2. ORIENT GRATING SPAN AS SHOWN. PROVIDE HINGED PANELS WHERE INDICATED.
E. PROVIDE STAINLESS STEEL PLATFORM FRAMING.
F. INTERIOR EXPOSED CONCRETE SURFACES MUST BE COATED WITH WHITE COLOR HIGH PERFORMANCE EPOXY COATING SYSTEM. COATING OVER THE FLOOR SLAB MUST INCLUDE SLIP RESISTANT MATERIAL. PROVIDE LIGHT TROWEL FINISH TO THE TOP SURFACE OF THE BASE SLAB. PRIOR TO EPOXY COATING APPLICATION. PREPARE SURFACE IN ACCORDANCE WITH MANUFACTURER'S RECOMMENDATION. SEE SPECIFICATION SECTION 09 96 00.
G. ASSURE THAT THE WATER LEVEL AROUND THE PIT STRUCTURE REMAIN A MINIMUM OF 1'-0" BELOW B/SLAB DURING BASE SLAB CONSTRUCTION AND CURING. WATER LEVEL MUST BE MAINTAINED A MINIMUM OF 1'-0" BELOW TOP OF BASE SLAB UNTIL WALL CONSTRUCTION AND CURING IS COMPLETE. WATER LEVEL MUST BE MAINTAINED A MINIMUM OF 3'-0" BELOW GRADE LEVEL UNTIL BACKFILLING IS COMPLETE. WATER ABOVE THE MAXIMUM LEVEL INDICATED MUST BE PUMPED AWAY FROM THE EXCAVATION.
H. PROVIDE SUMP GRATING THAT CONFORMS TO THE GENERAL NOTES ON SF002. SEE DETAIL D1/SF502 FOR GRATING SUPPORT.
I. SEE SF502 FOR MANHOLE STEPS, ACCESS LADDER, SAFETY POST, AND GRAB BAR DETAILS.
J. SEE SF521 TO SF525 FOR ROLLING COVER DETAILS. USE HOT-DIPPED GALVANIZED STEEL FOR RAIL ASSEMBLIES.
K. COORDINATE PIPE LOCATIONS AND ELEVATIONS WITH MECHANICAL DRAWINGS.
L. PIPE SLEEVE MUST BE INSTALLED AND ALIGNED PRIOR TO THE CONSTRUCTION OF THE CONCRETE WALL. PIPE SLEEVE MUST BE CAST INTEGRAL WITH THE CONCRETE WALL. SEE DETAIL B2/SF502 FOR PIPE SLEEVE DETAIL. PROVIDE ADD BARS AT OPENINGS PER DETAIL C3/SF501.
M. SEE GENERAL NOTES ON SF002 FOR DAMPPROOFING REQUIREMENTS.
N. SEE SF501 AND SF502 FOR TYPICAL DETAILS.
O. PROVIDE A TROWELED FINISH TO THE TOP SURFACE OF THE BASE SLAB.
P. USE CONCRETE WITH CRYSTALLINE WATERPROOFING ADMIXTURES FOR THE FLOOR SLAB AND WALLS AROUND THE VAULTS. SEE SPECIFICATION 03 30 00.
Q. PROVIDE LABEL ON THE ROLLING COVER INDICATING THE VAULT NUMBER AND NAME. IN ADDITION, PROVIDE PAINTED LABELS ON THE INTERIOR SIDE OF THE VAULT WALL ADJACENT TO EACH PIPE INDICATING THE CONTENT OF PIPE IN ACCORDANCE WITH MIL-STD-161H.

SYM	DESCRIPTION	DATE

NAVFAC

STATE OF MISSOURI
A. HASSAN BAHADOR
NUMBER E-25085
REGISTERED PROFESSIONAL ENGINEER
01/13/2026
SEAL

Jacobs / BURNS McDONNELL
JACOBS/B&M, A JOINT VENTURE
1100 NORTH GLEBE ROAD
SUITE 500
ARLINGTON, VA 22201
A/E Contract No. N62470-20-D-0002
A/E Task Order No. N62470-19-1010
JKO NO. 2DA30803
A/E INFO

APPROVED
FOR COMMANDER NAVFAC DATE 02/02/2026

ACTIVITY
AFIMSC APPROVAL PER NAVFAC SAT-TO CHECKLIST

SATISFACTORY TO DATE 31 DEC 2025

DES: AHS	DRW: MKP	REV: JMH
PM/DM		KKK
BRANCH MANAGER		SMK
CHIEF ENG/ARCH		SMK
FIRE PROTECTION		RO

DEPARTMENT OF THE NAVY
NAVAL FACILITIES ENGINEERING SYSTEMS COMMAND
NAVFAC PACIFIC
NAVAL FACILITIES ENGINEERING SYSTEMS COMMAND ~ PACIFIC
JOINT REGION MARIANAS (JRM)
ANDERSEN AIR FORCE BASE
GUAM

FY24 AUJY183012 (P-012),
PDI: NORTH AIRCRAFT PARKING RAMP

ISOLATION VALVE VAULT 1 - PLANS

SCALE: AS SHOWN
EPROJECTS NO.: 1665555
CONSTR CONTROL NO.
NAVFAC DRAWING NO. 17361959
SHEET 336 OF 377
SF111

GRAPHIC SCALE
0 1' 2' 3' 4' 8'
SCALE: 3/8"=1'-0"

NORTH ARROW
TRUE N

IF SHEET IS LESS THAN 22" X 34"
REDUCED PRINT. USE GRAPHIC SCALES

REDESIGN FINAL SUBMITTAL

FILE NAME: C:\Revit_Projects\P012-1665555-SSF-3D_mpatel@burnsmcd.com.rvt
LAYOUT NAME: ISOLATION VALVE VAULT 1 - PLANS
PLOTTED: 1/13/2026 3:01:10 PM
USER: MKP

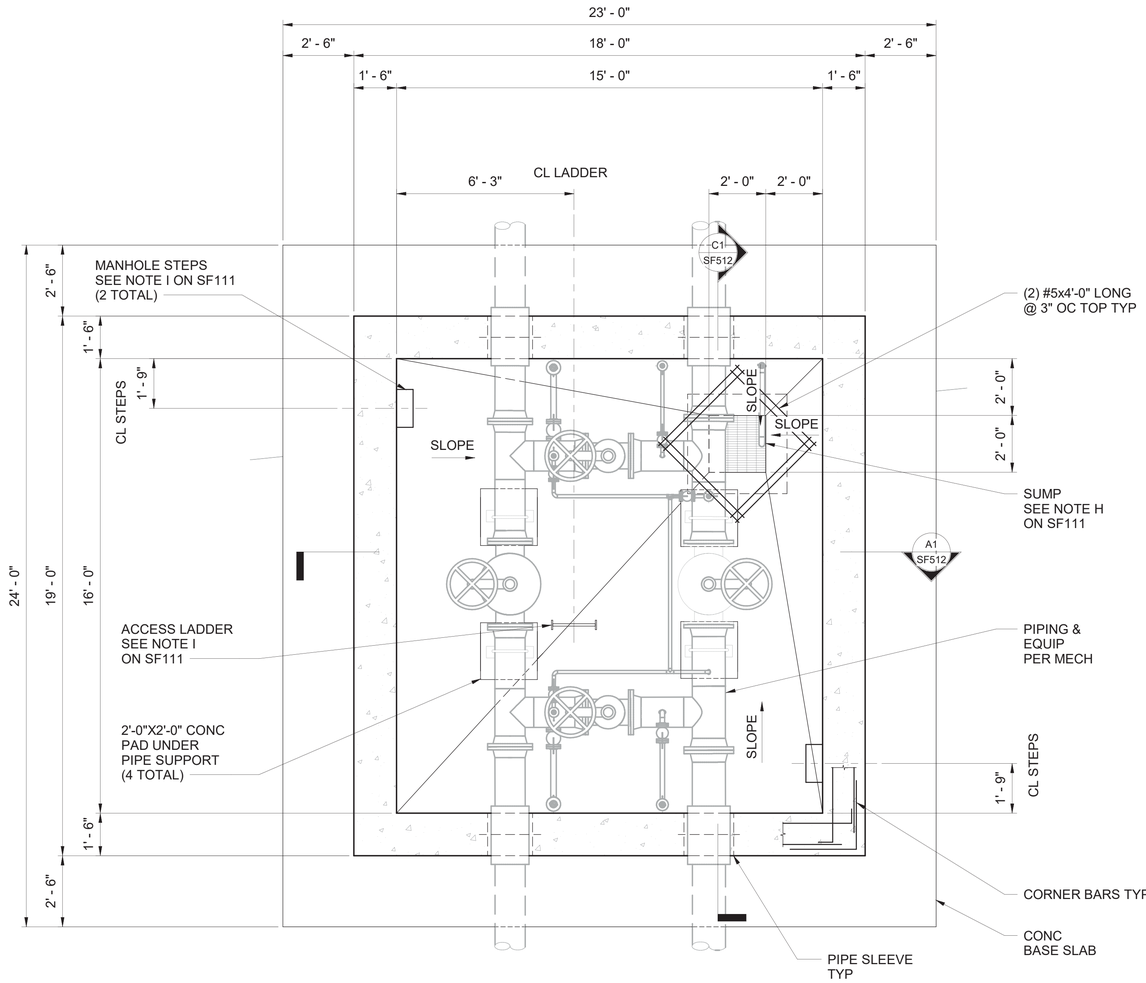

B1 IVV-2 - BASE SLAB PLAN
SCALE: 3/8" = 1'-0"

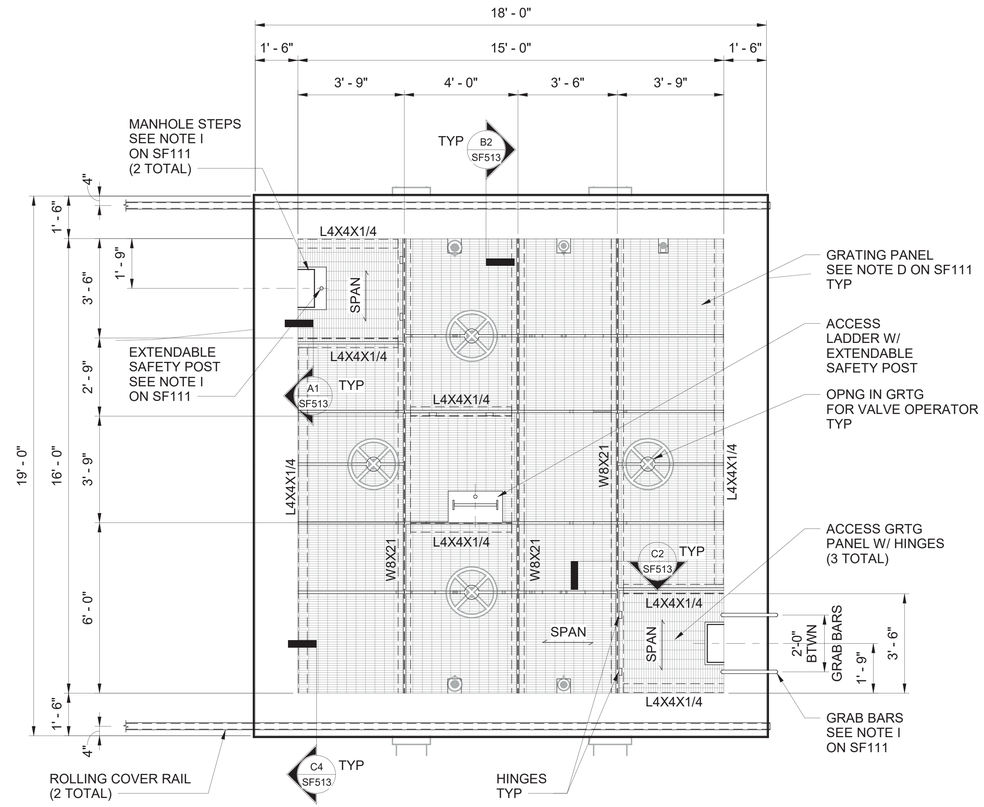

NOTE:
CONTRACTOR TO COORDINATE FRAMING WITH FINAL PIPING AND COMPONENTS. NOTIFY CONTRACTING OFFICER OF ANY INTERFERENCE.

B3 IVV-2 - PLATFORM FRAMING PLAN
SCALE: 3/8" = 1'-0"

SHEET NOTES:

A. SEE SF111 FOR ISOLATION VALVE VAULT NOTES.

GRAPHIC SCALE
0 1' 2' 3' 4' 8'
SCALE: 3/8"=1'-0"

NORTH ARROW
TRUE N

IF SHEET IS LESS THAN 22" X 34"
REDUCED PRINT. USE GRAPHIC SCALES

SYM	DESCRIPTION	DATE

NAVFAC

STATE OF MISSOURI
A. HASSAN BAHUGUNA
NUMBER E-25085
REGISTERED PROFESSIONAL ENGINEER
01/13/2026
SEAL

Jacobs / BURNS McDONNELL
JACOBS/B&M, A JOINT VENTURE
1100 NORTH GLEBE ROAD
SUITE 500
ARLINGTON, VA 22201
A/E Contract No. N62470-20-D-0002
A/E Task Order No. N62470-F9315
JKO NO. 204/3663
A/E INFO

APPROVED
FOR COMMANDER NAVFAC DATE 02/02/2026

ACTIVITY
AFIMSC APPROVAL PER NAVFAC SAT-TO CHECKLIST

SATISFACTORY TO DATE 31 DEC 2025

DES: AHS	DRW: MKP	REV: JMH
PM/DM		KKK
BRANCH MANAGER		SMK
CHIEF ENG/ARCH		SMK
FIRE PROTECTION		RO

DEPARTMENT OF THE NAVY
NAVAL FACILITIES ENGINEERING SYSTEMS COMMAND
NAVFAC PACIFIC
ANDERSEN AIR FORCE BASE
NAVAL FACILITIES ENGINEERING SYSTEMS COMMAND – PACIFIC
JOINT REGION MARIANAS (JRM)
GUAM

FY24 AJJY183012 (P-012),
PDI: NORTH AIRCRAFT PARKING RAMP

ISOLATION VALVE VAULT 2 - PLANS - SHEET 1

SCALE: AS SHOWN
EPROJECTS NO.: 1665555
CONSTR CONTROL NO.
NAVFAC DRAWING NO. 17361960
SHEET 337 OF 377

SF112

REDESIGN FINAL SUBMITTAL

FILE NAME: C:\Revit_Projects\P012-1665555-SSF-3D_mpatel@burnsmcd.com.rvt
LAYOUT NAME: ISOLATION VALVE VAULT 2 - PLANS - SHEET 1
PLOTTED: 1/13/2026 3:01:12 PM
USER: MKP

SHEET NOTES

A. SEE SF111 FOR ISOLATION VALVE VAULT NOTES.

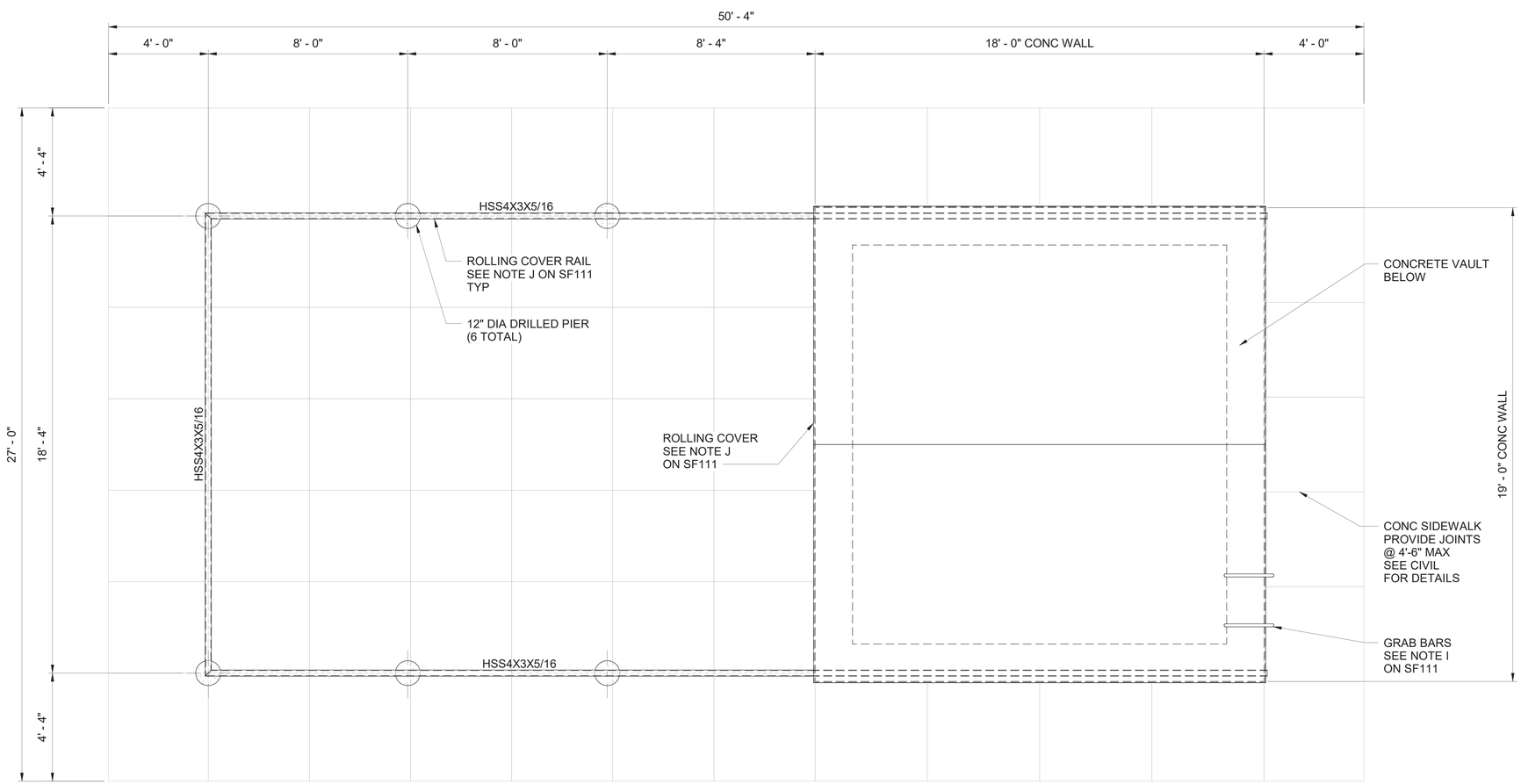

A1 IVV-2 - ROLLING COVER PLAN
SCALE: 3/8" = 1'-0"

GRAPHIC SCALE

0 1' 2' 3' 4' 8'

SCALE: 3/8"=1'-0"

NORTH ARROW

TRUE N

SYM	DESCRIPTION	DATE

NAVFAC

STATE OF MISSOURI
A. HASSAN BAHUDDIN
NUMBER E-25086
REGISTERED PROFESSIONAL ENGINEER
01/13/2026
SEAL

Jacobs / BURNS McDONNELL

JACOBS/B&M, A JOINT VENTURE
1100 NORTH GLEBE ROAD
SUITE 500
ARLINGTON, VA 22201

A/E Contract No. N62470-20-D-0002
A/E Task Order No. N62470-FF015
JKO NO. 204306R3

A/E INFO

APPROVED
Eva Mejia
FOR COMMANDER NAVFAC DATE 02/02/2026

ACTIVITY
AFIMSC APPROVAL PER NAVFAC SAT-TO CHECKLIST

SATISFACTORY TO DATE 31 DEC 2025

DES: AHS	DRW: MKP	REV: JMH
PM/DM		KKK
BRANCH MANAGER		SMK
CHIEF ENG/ARCH		SMK
FIRE PROTECTION		RO

DEPARTMENT OF THE NAVY
NAVAL FACILITIES ENGINEERING SYSTEMS COMMAND
NAVFAC PACIFIC
NAVAL FACILITIES ENGINEERING SYSTEMS COMMAND – PACIFIC
JOINT REGION MARIANAS (JRM)
ANDERSEN AIR FORCE BASE
GUAM

FY24 AUY183012 (P-012),
PDI: NORTH AIRCRAFT PARKING RAMP

ISOLATION VALVE VAULT 2 - PLAN - SHEET 2

SCALE: AS SHOWN
EPROJECTS NO.: 1665555
CONSTR CONTROL NO.
NAVFAC DRAWING NO. 17361961
SHEET 338 OF 377

SF113

REDESIGN FINAL SUBMITTAL

IF SHEET IS LESS THAN 22" X 34"
REDUCED PRINT. USE GRAPHIC SCALES

FILE NAME: C:\Revit_Projects\P012-1665555-SSF-3D_mpatel@burnsmcd.com.rvt
LAYOUT NAME: ISOLATION VALVE VAULT 2 - PLAN - SHEET 2
PLOTTED: 1/13/2026 3:01:12 PM
USER: MKP

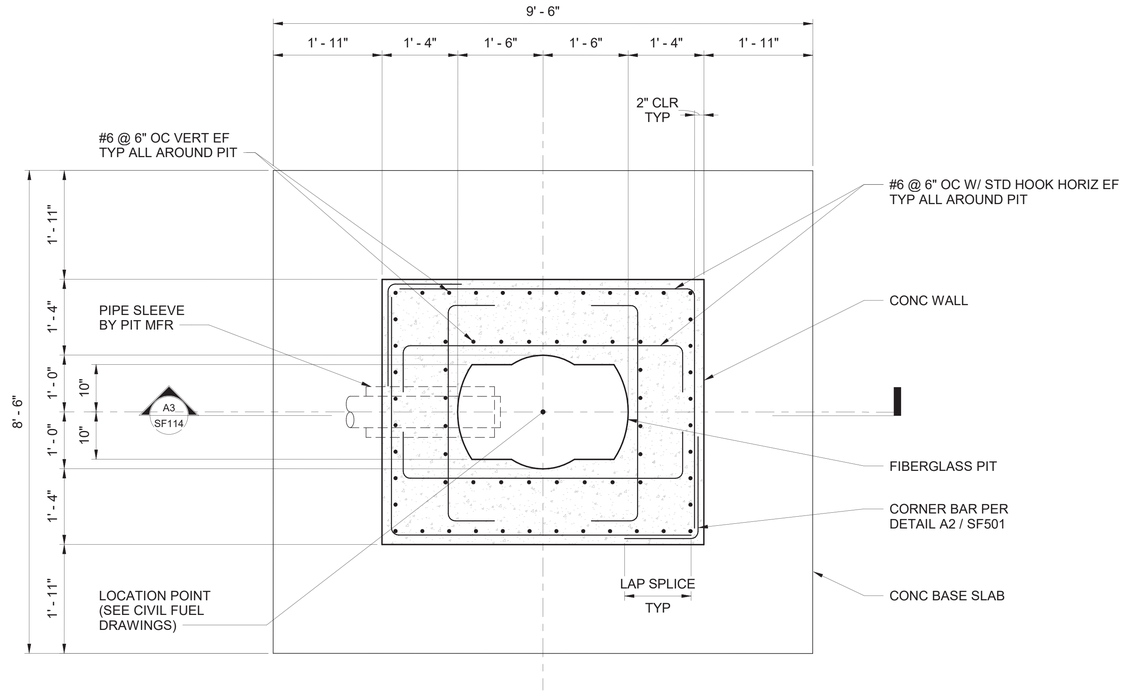

C1 HYDRANT PIT - WALL AND BASE SLAB PLAN
SCALE: 3/4" = 1'-0"

SHEET NOTES

A. SEE SF001 AND SF002 FOR STRUCTURAL GENERAL NOTES.
B. SEE CIVIL FOR LOCATIONS AND ORIENTATIONS OF VAULTS AND PITS INCLUDING PIPE ENTRY LOCATION.
C. SEE SF501 AND SF502 FOR TYPICAL DETAILS.
D. PIT DIMENSIONS MUST BE STANDARD WITH THE MANUFACTURER AND NOT LESS THAN THOSE INDICATED, BUT EXCEEDING THE INDICATED DIMENSIONS ONLY BY THE AMOUNT OF THE CLOSEST STANDARD SIZE. PROVIDE CHANGES TO THE REINFORCED CONCRETE REQUIRED TO MATCH THE CONFIGURATION OF THE SUPPLIED PITS AT NO ADDITIONAL COST TO THE GOVERNMENT AND SUBMIT FOR APPROVAL.
E. REFERENCE CIVIL AND MECHANICAL DRAWINGS FOR PIT DETAILS AND LID ORIENTATION. SEE SPECIFICATION 33 52 43.11 FOR FIBERGLASS PIT AND ALUMINUM COVER REQUIREMENTS. RECESS THE COVER 1/2" BELOW THE FRAME.
F. PROVIDE BROOMED FINISH TO THE TOP SURFACE OF THE TOP SLAB.
G. PIPE SLEEVE MUST BE INSTALLED AND ALIGNED PRIOR TO THE CONSTRUCTION OF THE CONCRETE WALL. PIPE SLEEVE MUST BE CAST INTEGRAL WITH THE CONCRETE WALL. SEE DETAIL C4/MF502 FOR PIPE SLEEVE DETAIL AND PROVIDE ADD BARS AT OPENINGS PER DETAIL C3/SF501.
H. SEE GENERAL NOTES ON SF002 FOR DAMPPROOFING REQUIREMENTS.
I. PROVIDE LABEL ON THE PIT COVER INDICATING THE PIT NUMBER AND NAME. IN ADDITION, PROVIDE PAINTED LABELS ON THE TOP OF THE PIT WALL ADJACENT TO THE COVER INDICATING THE CONTENT OF PIPE IN ACCORDANCE WITH MIL-STD-161H.

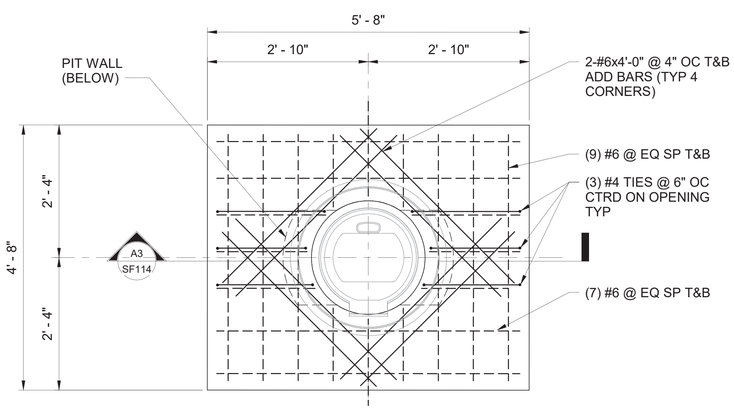

A1 HYDRANT PIT - TOP SLAB PLAN
SCALE: 3/4" = 1'-0"

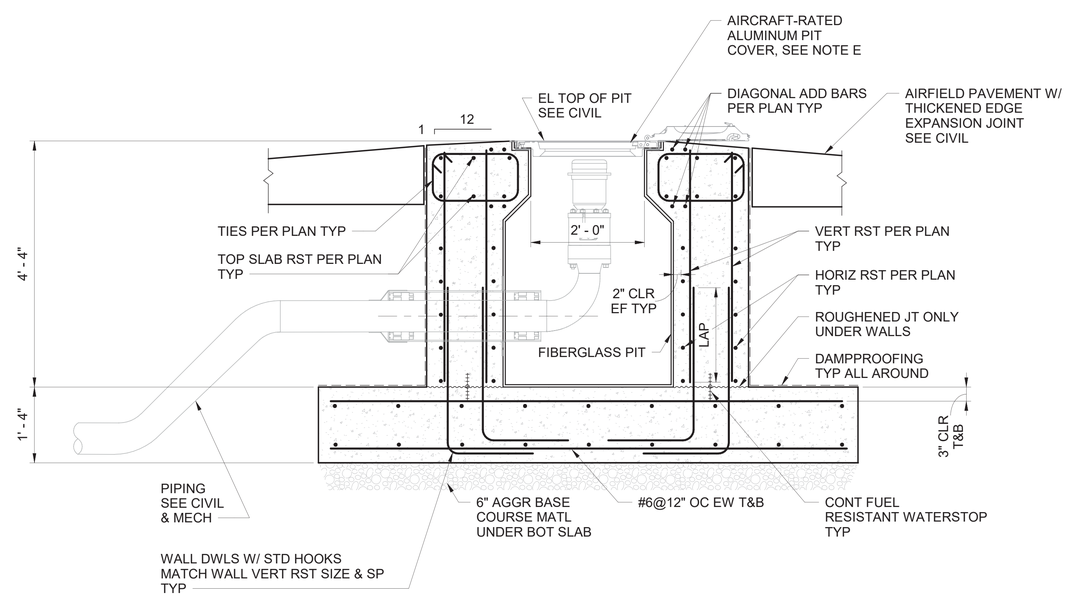

A3 SECTION
SCALE: 3/4" = 1'-0"

GRAPHIC SCALE
2' 1' 6" 0 2'
SCALE: 3/4"=1'-0"

SYM	DESCRIPTION	DATE

NAVFAC

STATE OF MISSOURI
A. HASSAN BAHUDDIN
NUMBER E-25085
REGISTERED PROFESSIONAL ENGINEER
01/13/2026
SEAL

Jacobs / BURNS McDONNELL
JACOBS/B&M, A JOINT VENTURE
1100 NORTH GLEBE ROAD
SUITE 500
ARLINGTON, VA 22201
A/E Contract No. N62470-20-D-0002
A/E Task Order No. N62742-19-1015
JKO NO. 204/3663
A/E INFO

APPROVED
FOR COMMANDER NAVFAC DATE 02/02/2026

ACTIVITY
AFIMSC APPROVAL PER NAVFAC SAT-TO CHECKLIST

SATISFACTORY TO DATE 31 DEC 2025

DES: AHS	DRW: MKP	REV: JMH
PM/DM		KKK
BRANCH MANAGER		SMK
CHIEF ENG/ARCH		SMK
FIRE PROTECTION		RO

DEPARTMENT OF THE NAVY
NAVAL FACILITIES ENGINEERING SYSTEMS COMMAND
NAVFAC PACIFIC
NAVAL FACILITIES ENGINEERING SYSTEMS COMMAND – PACIFIC
JOINT REGION MARIANAS (JRM)
ANDERSEN AIR FORCE BASE
GUAM

FY24 AUY183012 (P-012),
PDI: NORTH AIRCRAFT PARKING RAMP

HYDRANT PIT - PLANS AND SECTIONS

SCALE: AS SHOWN
EPROJECTS NO.: 1665555
CONSTR CONTROL NO.
NAVFAC DRAWING NO. 17361962
SHEET 339 OF 377
SF114

REDESIGN FINAL SUBMITTAL

IF SHEET IS LESS THAN 22" X 34"
REDUCED PRINT. USE GRAPHIC SCALES

FILE NAME: C:\Revit_Projects\P012-1665555-SSF-3D_mpatel@burnsmcd.com.rvt
LAYOUT NAME: HYDRANT PIT - PLANS AND SECTIONS
PLOTTED: 1/13/2026 3:01:13 PM
USER: MKP

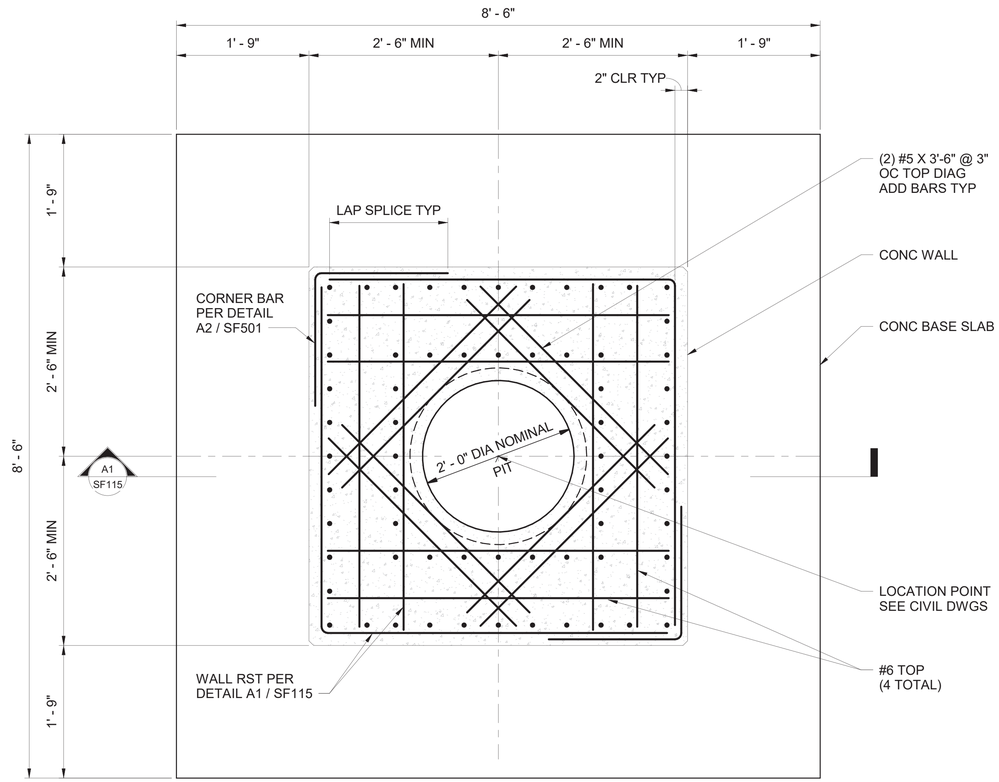

NOTE:
CAP BARS NOT SHOWN FOR CLARITY.

B1 HPV PIT (TRAFFIC RATED) - WALL AND BASE SLAB PLAN

SCALE: 1" = 1'-0"

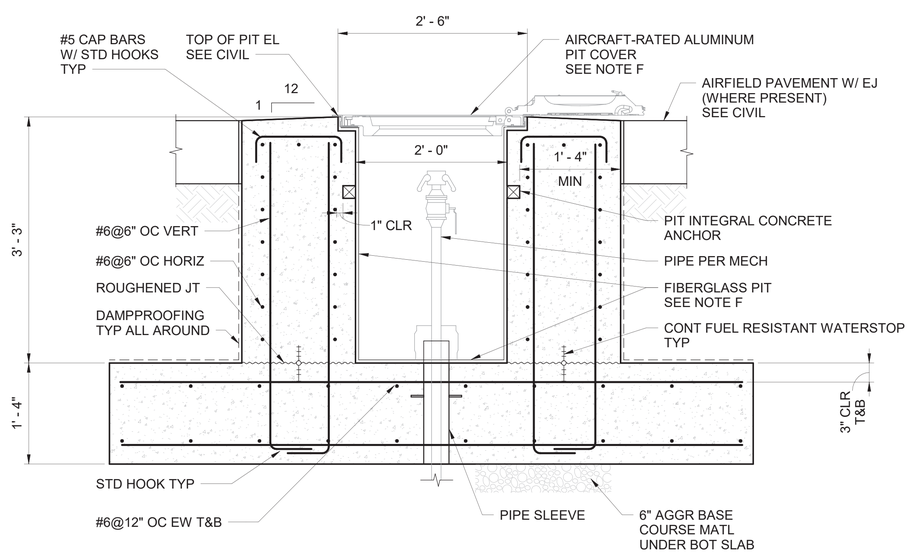

A1 SECTION

SCALE: 1" = 1'-0"

SHEET NOTES

A. SEE SF001 AND SF002 FOR STRUCTURAL GENERAL NOTES.
B. SEE CIVIL FOR EXACT LOCATIONS AND ORIENTATIONS.
C. COORDINATE PIPE LOCATIONS AND ELEVATIONS WITH MECHANICAL DRAWINGS.
D. SEE SF501 AND SF502 FOR TYPICAL DETAILS.
E. PIPE SLEEVE MUST BE INSTALLED AND ALIGNED PRIOR TO THE CONSTRUCTION OF THE CONCRETE SLAB. PIPE SLEEVE MUST BE CAST INTEGRAL WITH THE CONCRETE SLAB. SEE DETAIL C4/MF502 FOR PIPE SLEEVE DETAIL AND PROVIDE ADD BARS AT OPENINGS PER DETAIL C3/SF501.
F. REFERENCE CIVIL AND MECHANICAL DRAWINGS FOR PIT DETAILS AND LID ORIENTATION. SEE SPECIFICATION 33 52 43.11 FOR FIBERGLASS PIT AND ALUMINUM COVER REQUIREMENTS. RECESS THE COVER 1/2" BELOW THE FRAME.
G. PROVIDE BROOMED FINISH TO THE TOP SURFACE OF THE TOP SLAB.
H. SEE GENERAL NOTES ON SF002 FOR DAMPPROOFING REQUIREMENTS.
I. PROVIDE LABEL ON THE PIT COVER INDICATING THE PIT NUMBER AND NAME. IN ADDITION, PROVIDE PAINTED LABELS ON THE TOP OF THE PIT WALL ADJACENT TO THE COVER INDICATING THE CONTENT OF PIPE IN ACCORDANCE WITH MIL-STD-161H.

SYM	DESCRIPTION	DATE

NAVFAC

STATE OF MISSOURI
A. HASSAN BAHUDDIN
NUMBER E-25085
REGISTERED PROFESSIONAL ENGINEER
01/13/2026
SEAL

Jacobs / BURNS McDONNELL

JACOBS/B&M, A JOINT VENTURE
1100 NORTH GLEBE ROAD
SUITE 500
ARLINGTON, VA 22201

A/E Contract No. N62470-20-D-0002
A/E Task Order No. N62742F9315
JKO NO. 204/3803

A/E INFO

APPROVED
Eva Mejia
FOR COMMANDER NAVFAC DATE 02/02/2026

ACTIVITY
AFIMSC APPROVAL PER NAVFAC SAT-TO CHECKLIST

SATISFACTORY TO DATE 31 DEC 2025

DES:	AHS	DRW:	MKP	REV:	JMH

PM/DM	KKK
BRANCH MANAGER	SMK
CHIEF ENG/ARCH	SMK
FIRE PROTECTION	RO

DEPARTMENT OF THE NAVY
NAVAL FACILITIES ENGINEERING SYSTEMS COMMAND
NAVFAC PACIFIC
NAVAL FACILITIES ENGINEERING SYSTEMS COMMAND – PACIFIC
JOINT REGION MARIANAS (JRM)
ANDERSEN AIR FORCE BASE
GUAM

FY24 AUJY183012 (P-012),
PDI: NORTH AIRCRAFT PARKING RAMP

HPV PITS - PLANS AND SECTIONS

SCALE: AS SHOWN
EPROJECTS NO.: 1665555
CONSTR CONTROL NO.
NAVFAC DRAWING NO. 17361963
SHEET 340 OF 377

SF115

REDESIGN FINAL SUBMITTAL

GRAPHIC SCALE
1' 6" 0 1' 2'
SCALE: 1"=1'-0"

IF SHEET IS LESS THAN 22" X 34"
REDUCED PRINT. USE GRAPHIC SCALES

FILE NAME: C:\Revit_Projects\P012-1665555-SSF-3D_mpatel@burnsmcd.com.rvt
LAYOUT NAME: HPV PITS - PLANS AND SECTIONS
PLOTTED: 1/13/2026 3:01:14 PM
USER: MKP

MINIMUM EMBEDMENT AND LAP SPLICE LENGTHS (INCHES)								
BAR SIZE	BAR DIAMETER (db) in.	INSIDE BEND DIAMETER (D) in.	5000 PSI CONCRETE			3500 PSI CONCRETE		
			SPLICE LENGTH		STD HOOK EMBEDMENTS (ldh)	SPLICE LENGTH		STD HOOK EMBEDMENTS (ldh)
			TYPICAL BARS	TOP BARS		TYPICAL BARS	TOP BARS	
#3	0.375	2.25	12	13	7	12	16	6
#4	0.500	3.00	14	18	11	16	21	7
#5	0.625	3.75	20	26	15	24	31	10
#6	0.750	4.50	28	36	19	33	43	13
#7	0.875	5.25	45	58	24	53	69	16
#8	1.000	6.00	56	72	29	66	86	20

TABLE NOTES:

A. THIS TABLE CONFORMS TO ACI 318, CLASS B TENSION LAP SPLICE FOR NORMAL WEIGHT CONCRETE AND 60 KSI UNCOATED REINFORCEMENT WITH CLEAR SPACING BETWEEN BARS GREATER THAN 2" AND CLEAR COVER GREATER THAN 1". COVER BEYOND THE END OF STANDARD HOOKS MUST BE 2" MINIMUM.

B. PROVIDE SPLICES AS SHOWN ABOVE UNLESS OTHERWISE NOTED ON THE DRAWINGS. SUBSTITUTION OF SPLICE LENGTHS SHORTER THAN THOSE GIVEN MUST BE IN ACCORDANCE WITH APPLICABLE PROVISIONS OF ACI 318 WITH WRITTEN APPROVAL OF THE CONTRACTING OFFICER.

C. TOP BARS ARE ANY HORIZONTAL OR INCLINED REINFORCEMENT HAVING MORE THAN 12" OF CONCRETE PLACED BELOW THE REINFORCEMENT. VERTICAL BARS MAY BE CLASSIFIED AS NON-TOP BARS.

D. EMBEDMENT FOR STANDARD HOOK (ldh) IS THE MINIMUM STRAIGHT LINE DISTANCE FROM THE CRITICAL SECTION IN THE BAR (I.E. AT A JOINT) TO THE FARTHEST EDGE OF THE HOOK. SEE HOOK EMBEDMENT DIAGRAM.

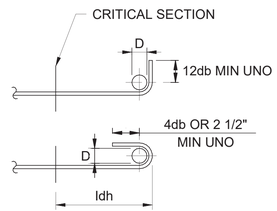

STANDARD HOOK EMBEDMENT DIAGRAM

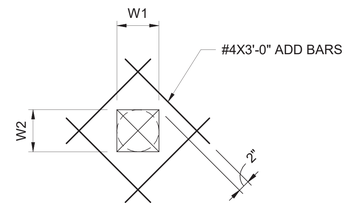

NOTE:
FOR W1 AND W2 LESS THAN (OR EQUAL TO) 8", THE ADD BARS ARE NOT REQUIRED IF NO REINFORCING IS CUT BY THE OPENING.

W1 & W2 ≤ 0'-8"

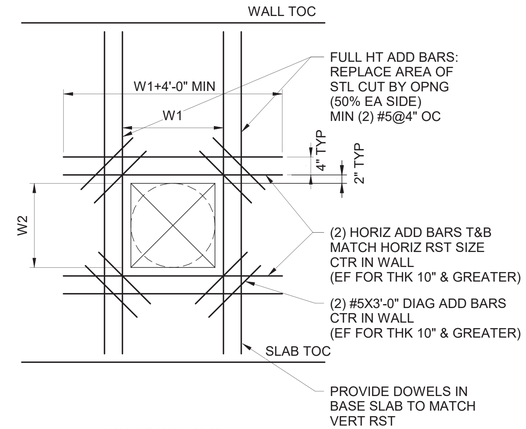

W1 OR W2 > 0'-8"

C3 TYPICAL ADDED REINFORCEMENT AROUND CONCRETE OPENINGS IN VAULT WALLS

SCALE:NTS

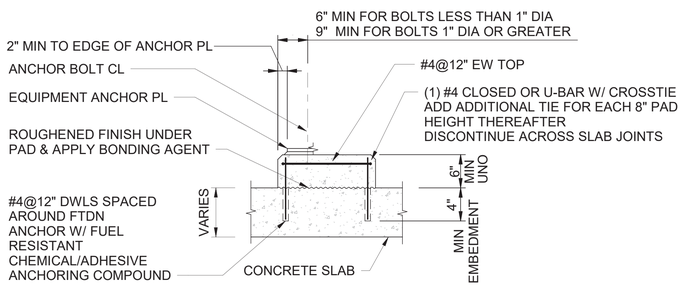

NOTES:

A. PROVIDE HOUSEKEEPING PAD FOR EQUIPMENT WHEN OTHER FOUNDATIONS HAVE NOT BEEN INDICATED. COORDINATE PAD SIZE AND THICKNESS WITH THE FINAL EQUIPMENT INSTALLED.

B. PROVIDE ANCHOR BOLTS AND GROUT AS REQUIRED BY EQUIPMENT MANUFACTURER OR ANCHOR BOLT SCHEDULE, WHICHEVER IS MORE STRINGENT.

C. HOUSEKEEPING PAD MUST CONFORM TO THIS DETAIL, EQUIPMENT MANUFACTURER'S REQUIREMENTS, AND THE FOLLOWING:
   1. REINFORCE PAD TO CONFORM WITH THIS DETAIL. IF THE FLOOR IS CONSTRUCTED BEFORE THE DOWELS ARE PLACED, THE DOWELS MUST BE INSTALLED USING ADHESIVE ANCHORS INTO THE FLOOR SLAB.
   2. EQUIPMENT MUST BE GROUTED IN PLACE WITH NON-SHRINK GROUT, UNLESS OTHERWISE RECOMMENDED BY THE EQUIPMENT MANUFACTURER.
   3. EQUIPMENT ANCHOR BOLTS MUST BE POST-INSTALLED ADHESIVE ANCHORS, UNLESS OTHERWISE RECOMMENDED BY THE EQUIPMENT MANUFACTURER. WHEN TYPE VII CAST-IN-PLACE ANCHOR BOLTS ARE REQUIRED, PAD MUST BE CONSTRUCTED MONOLITHIC WITH SLAB.

D. PROVIDE DOWELS AT 12" MINIMUM CENTER TO CENTER, OR PROVIDE NUMBER OF DOWELS TO EQUAL TOTAL CROSS SECTIONAL AREA OF ANCHOR BOLTS ON PAD, EQUALLY SPACED AROUND PAD.

E. UNLESS INDICATED OTHERWISE, THE REQUIRED EMBEDMENT DEPTH FOR ANCHOR BOLTS LARGER THAN 5/8" DIAMETER MUST BE PROVIDED WITHIN THE BASE SLAB BELOW THE EQUIPMENT PAD.

A1 TYPICAL HOUSEKEEPING PAD

SCALE:NTS

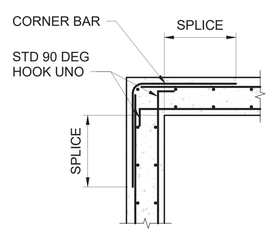

AT CORNERS

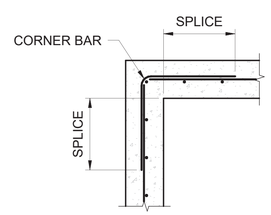

AT CORNERS

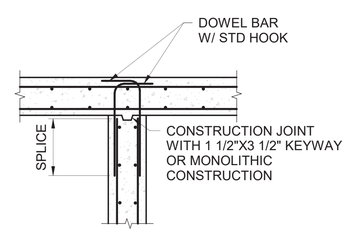

AT INTERSECTIONS

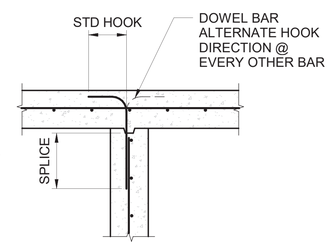

AT INTERSECTIONS

NOTE:
DOWEL BAR SIZE AND SPACING TO MATCH SIZE AND SPACING OF LARGER DIAMETER HORIZONTAL WALL REBAR.

A2 TYPICAL WALL REINFORCEMENT DETAILS

SCALE:NTS

SYM	DESCRIPTION	DATE

NAVFAC

STATE OF MISSOURI
A. HASSAN BAHUDDIN
NUMBER E-25085
REGISTERED PROFESSIONAL ENGINEER
01/13/2026
SEAL

Jacobs / BURNS McDONNELL
JACOBS/B&M, A JOINT VENTURE
1100 NORTH GLEBE ROAD
SUITE 500
ARLINGTON, VA 22201
A/E Contract No. N62470-20-D-0002
A/E Task Order No. N62470F9315
JKO NO. 204/3803
A/E INFO

APPROVED
FOR COMMANDER NAVFAC DATE 02/02/2026

ACTIVITY
AFIMSC APPROVAL PER NAVFAC SAT-TO CHECKLIST

SATISFACTORY TO DATE 31 DEC 2025

DES: AHS	DRW: MKP	REV: JMH

PM/DM	KKK
BRANCH MANAGER	SMK
CHIEF ENG/ARCH	SMK
FIRE PROTECTION	RO

DEPARTMENT OF THE NAVY
NAVAL FACILITIES ENGINEERING SYSTEMS COMMAND
NAVAL FACILITIES ENGINEERING SYSTEMS COMMAND ~ PACIFIC
JOINT REGION MARIANAS (JRM)
NAVFAC PACIFIC
ANDERSEN AIR FORCE BASE
GUAM

FY24 AJJY183012 (P-012),
PDI: NORTH AIRCRAFT PARKING RAMP

STANDARD STRUCTURAL DETAILS - SHEET 1

SCALE: AS SHOWN
EPROJECTS NO.: 1665555
CONSTR CONTROL NO.
NAVFAC DRAWING NO. 17361964
SHEET 341 OF 377

SF501

REDESIGN FINAL SUBMITTAL

IF SHEET IS LESS THAN 22" X 34" REDUCED PRINT. USE GRAPHIC SCALES

FILE NAME: C:\Revit_Projects\P012-1665555-SSF-3D_mpatel@burnsmcd.com.rvt
LAYOUT NAME: STANDARD STRUCTURAL DETAILS - SHEET 1
PLOTTED: 1/13/2026 3:01:14 PM
USER: MKP

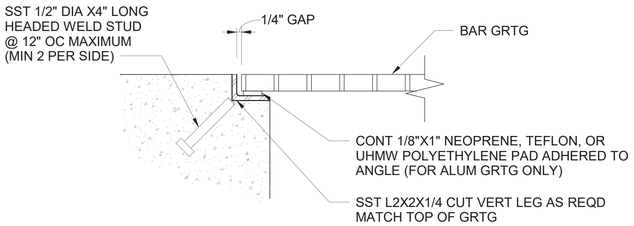

D1 TYPICAL GRATING SUPPORT
SCALE:NTS

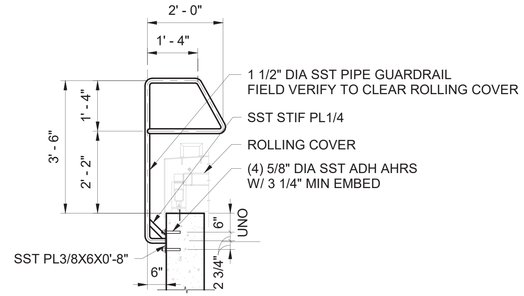

D2 GRAB BAR DETAIL
SCALE:NTS

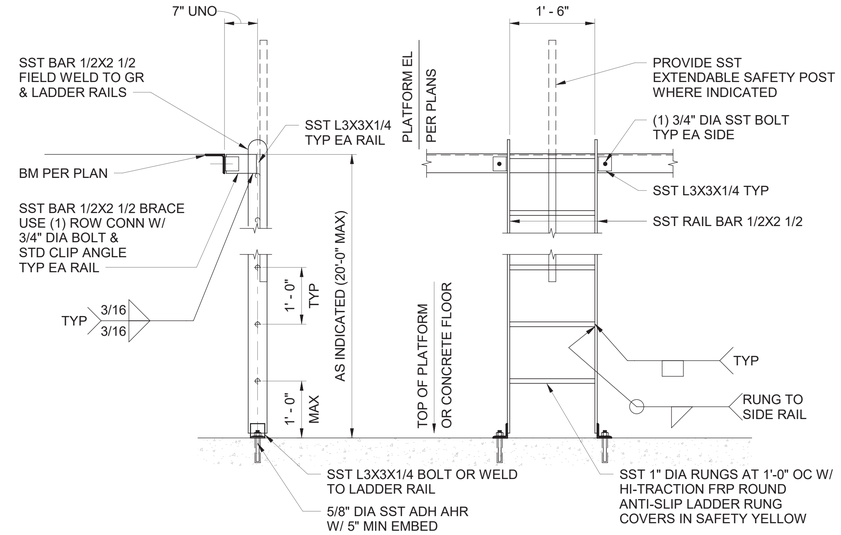

C4 ACCESS LADDER DETAIL
SCALE:NTS

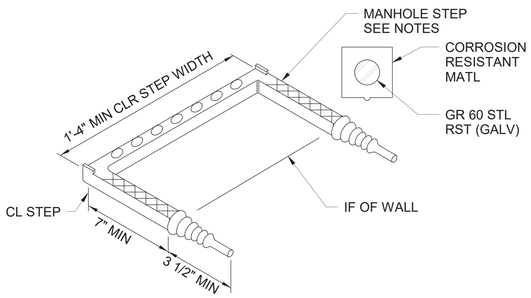

MANHOLE STEP NOTES:

A. MANHOLE STEPS MUST BE OSHA-COMPLIANT STANDARD MANUFACTURER'S PRODUCT USING COATED STEEL OR FIBERGLASS WITH SLIP-RESISTANT SURFACE.
B. STEPS MUST PROTRUDE 7" MINIMUM FROM INSIDE FACE OF STRUCTURAL WALL.
C. STEPS MUST HAVE 3 1/2" MINIMUM EMBEDMENT INTO THE WALL.
D. STEPS MUST BE VERTICALLY ALIGNED AND UNIFORMLY SPACED FOR THE ENTIRE DEPTH OF THE STRUCTURE. VERTICAL STEP SPACING MUST BE UNIFORM WITH 12" MAXIMUM SPACING.
E. STEPS MUST BE CAPABLE TO WITHSTAND A MINIMUM LOAD OF 300 POUNDS WHEN APPLIED 7" FROM THE FACE OF SUPPORT.
F. STEPS DIFFERING IN DIMENSIONS, CONFIGURATION, OR MATERIALS FROM THOSE SHOWN MAY BE USED, PROVIDED THEY MEET THE MINIMUM REQUIREMENTS SHOWN HERE AND MUST BE APPROVED IN WRITING BY THE CONTRACTING OFFICER.
G. COORDINATE LOCATION WITH ACCESS OPENING.
H. ALL STEPS WITHIN A PARTICULAR SET MUST BE IDENTICAL.

B1 MANHOLE STEP DETAIL
SCALE:NTS

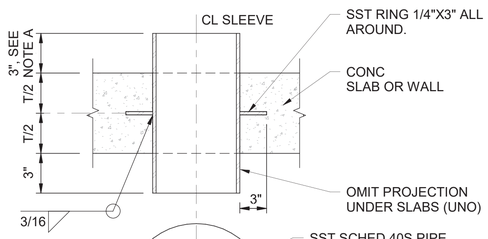

NOTES:

A. EXTEND HEIGHT OF PIPE SLEEVE TO 1 INCH ABOVE TOP OF CURB. FOR SLABS WITHOUT CURBS, EXTEND PIPE SLEEVE 3 INCHES ABOVE TOP OF SLAB, UNLESS INDICATED OTHERWISE.
B. SEE MECHANICAL FOR PIPE PENETRATION SEAL DETAIL AND SLEEVE SIZE.

B2 TYPICAL PIPE SLEEVE DETAIL
SCALE:NTS

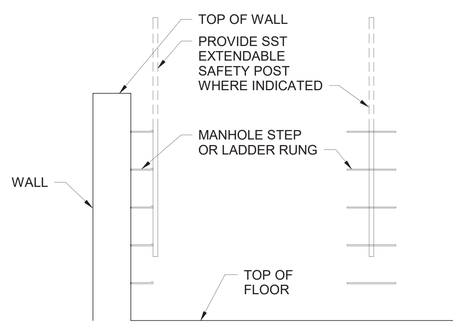

A1 MANHOLE STEPS WITH EXTENDABLE SAFETY POST
SCALE:NTS

SYM	DESCRIPTION	DATE

NAVFAC

STATE OF MISSOURI
A. HASSAN BAHUDDIN
NUMBER E-25085
REGISTERED PROFESSIONAL ENGINEER
01/13/2026
SEAL

Jacobs / BURNS McDONNELL
JACOBS/B&M, A JOINT VENTURE
1100 NORTH GLEBE ROAD
SUITE 500
ARLINGTON, VA 22201
A/E Contract No. N62470-20-D-0002
A/E Task Order No. N62470F3015
JKO NO. 204/2803
A/E INFO

APPROVED
FOR COMMANDER NAVFAC DATE 02/02/2026

ACTIVITY
AFIMSC APPROVAL PER NAVFAC SAT-TO CHECKLIST

SATISFACTORY TO DATE 31 DEC 2025

DES: AHS	DRW: MKP	REV: JMH

PM/DM KKK
BRANCH MANAGER SMK
CHIEF ENG/ARCH SMK
FIRE PROTECTION RO

DEPARTMENT OF THE NAVY
NAVAL FACILITIES ENGINEERING SYSTEMS COMMAND
NAVFAC PACIFIC
NAVAL FACILITIES ENGINEERING SYSTEMS COMMAND ~ PACIFIC
JOINT REGION MARIANAS (JRM)
ANDERSEN AIR FORCE BASE
GUAM

FY24 AJJY183012 (P-012),
PDI: NORTH AIRCRAFT PARKING RAMP

STANDARD STRUCTURAL DETAILS - SHEET 2

SCALE: AS SHOWN
EPROJECTS NO.: 1665555
CONSTR CONTROL NO.
NAVFAC DRAWING NO.
17361965
SHEET 342 OF 377

SF502

REDESIGN FINAL SUBMITTAL

IF SHEET IS LESS THAN 22" X 34"
REDUCED PRINT. USE GRAPHIC SCALES

FILE NAME: C:\Revit_Projects\P012-1665555-SSF-3D_mpatel@burnsmcd.com.rvt
LAYOUT NAME: STANDARD STRUCTURAL DETAILS - SHEET 2
PLOTTED: 1/13/2026 3:01:14 PM
USER: MKP

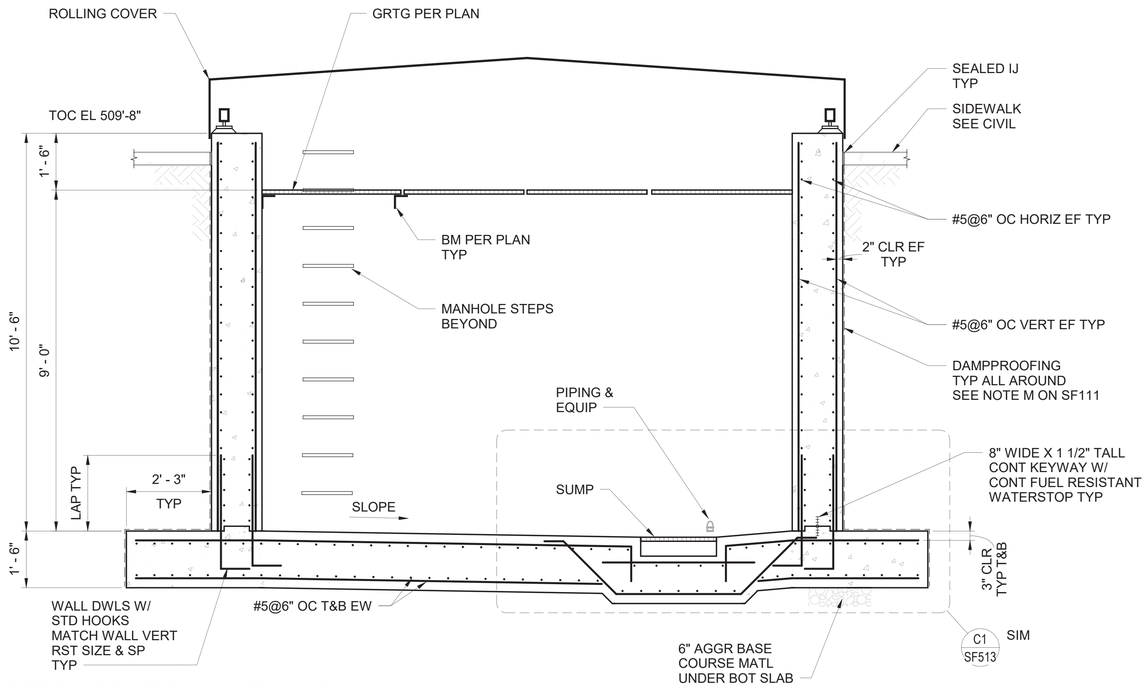

C1 SECTION ISOLATION VALVE VAULT 1
SCALE: 1/2" = 1'-0"

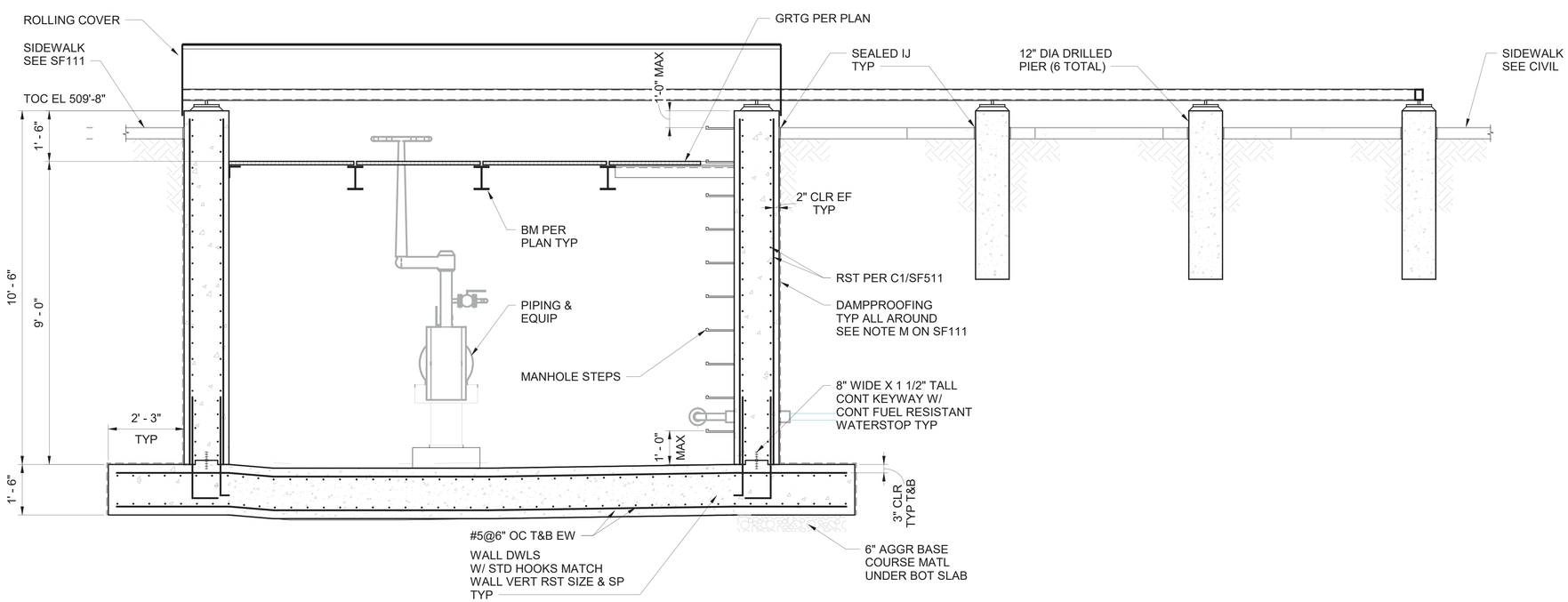

A1 SECTION ISOLATION VALVE VAULT 1
SCALE: 1/2" = 1'-0"

GRAPHIC SCALE

2 1 0 2 4

SCALE: 1/2"=1'-0"

IF SHEET IS LESS THAN 22" X 34"
REDUCED PRINT. USE GRAPHIC SCALES

SYM	DESCRIPTION	DATE

NAVFAC

STATE OF MISSOURI
A. HASSAN BAHUDDIN
NUMBER E-25085
REGISTERED PROFESSIONAL ENGINEER
01/13/2026
SEAL

Jacobs / BURNS McDONNELL

JACOBS/B&M, A JOINT VENTURE
1100 NORTH GLEBE ROAD
SUITE 500
ARLINGTON, VA 22201

A/E Contract No. N62470-20-D-0802
A/E Task Order No. N62472-FF3015
JKO NO. 204/3063

A/E INFO

APPROVED
Eva Mejia
FOR COMMANDER NAVFAC DATE 02/02/2026

ACTIVITY
AFIMSC APPROVAL PER NAVFAC SAT-TO CHECKLIST

SATISFACTORY TO DATE 31 DEC 2025

DES: AHS	DRW: MKP	REV: JMH

PM/DM	KKK
BRANCH MANAGER	SMK
CHIEF ENG/ARCH	SMK
FIRE PROTECTION	RO

DEPARTMENT OF THE NAVY
NAVAL FACILITIES ENGINEERING SYSTEMS COMMAND
NAVFAC PACIFIC
NAVAL FACILITIES ENGINEERING SYSTEMS COMMAND – PACIFIC
JOINT REGION MARIANAS (JRM)
ANDERSEN AIR FORCE BASE
GUAM

FY24 AUY183012 (P-012),
PDI: NORTH AIRCRAFT PARKING RAMP

ISOLATION VALVE VAULT - SECTIONS - SHEET 1

SCALE: AS SHOWN
EPROJECTS NO.: 1665555
CONSTR CONTROL NO.
NAVFAC DRAWING NO.
17361966
SHEET 343 OF 377

SF511

REDESIGN FINAL SUBMITTAL

FILE NAME: C:\Revit_Projects\P012-1665555-SSF-3D_mpatel@burnsmcd.com.rvt
LAYOUT NAME: ISOLATION VALVE VAULT - SECTIONS - SHEET 1
PLOTTED: 1/13/2026 3:01:15 PM
USER: MKP

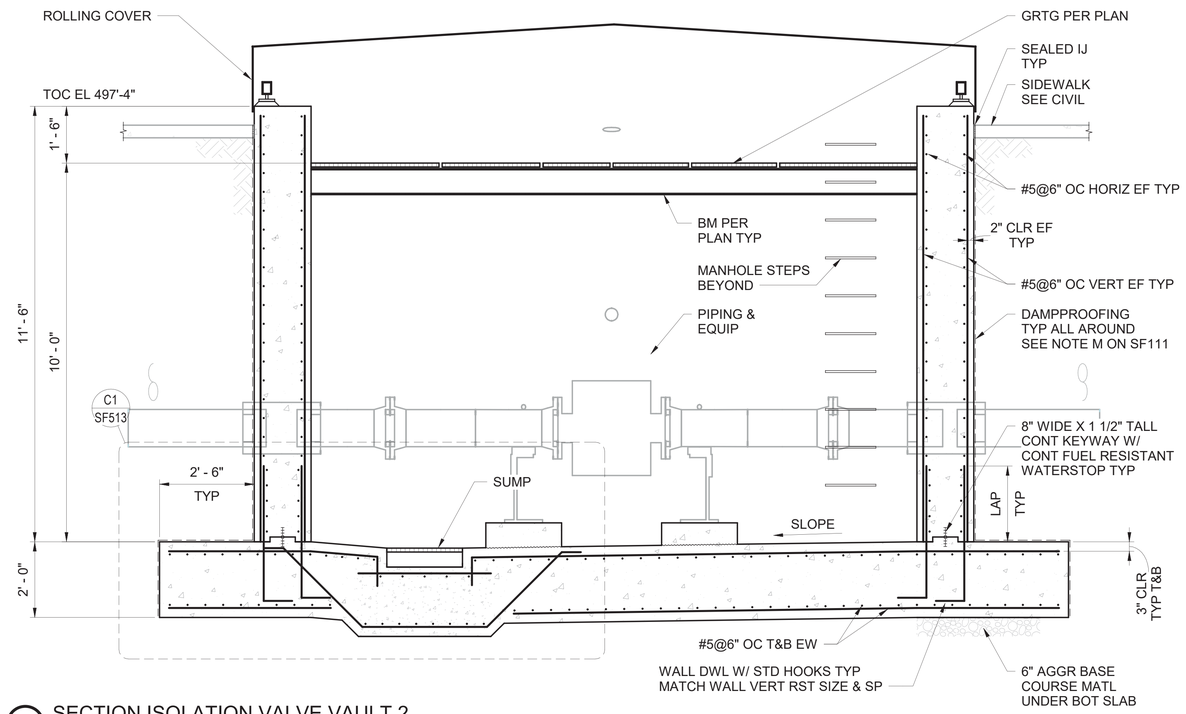

C1 SECTION ISOLATION VALVE VAULT 2
SCALE: 1/2" = 1'-0"

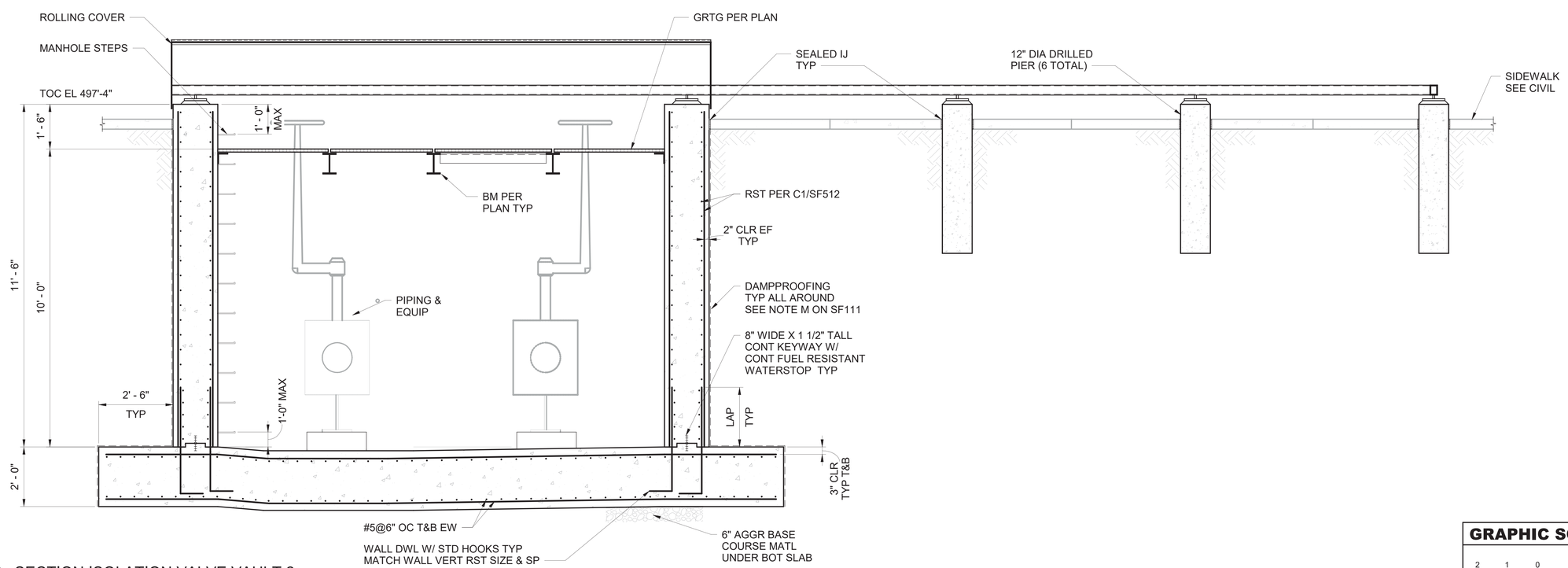

A1 SECTION ISOLATION VALVE VAULT 2
SCALE: 1/2" = 1'-0"

GRAPHIC SCALE

2 1 0 2 4

SCALE: 1/2"=1'-0"

IF SHEET IS LESS THAN 22" X 34"
REDUCED PRINT. USE GRAPHIC SCALES

SYM	DESCRIPTION	DATE

NAVFAC

STATE OF MISSOURI
A. HASSAN BAHUDDIN
NUMBER E-25085
REGISTERED PROFESSIONAL ENGINEER
01/13/2026
SEAL

Jacobs / BURNS McDONNELL

JACOBS/B&M, A JOINT VENTURE
1100 NORTH GLEBE ROAD
SUITE 500
ARLINGTON, VA 22201

A/E Contract No. N62470-20-D-0002
A/E Task Order No. N62470F3015
JKO NO. 204/3063

A/E INFO

APPROVED
Eva Mize
FOR COMMANDER NAVFAC DATE 02/02/2026

ACTIVITY
AFIMSC APPROVAL PER NAVFAC SAT-TO CHECKLIST

SATISFACTORY TO DATE 31 DEC 2025

DES: AHS	DRW: MKP	REV: JMH

PM/DM	KKK
BRANCH MANAGER	SMK
CHIEF ENG/ARCH	SMK
FIRE PROTECTION	RO

DEPARTMENT OF THE NAVY
NAVAL FACILITIES ENGINEERING SYSTEMS COMMAND
NAVFAC PACIFIC
ANDERSEN AIR FORCE BASE

NAVAL FACILITIES ENGINEERING SYSTEMS COMMAND – PACIFIC
JOINT REGION MARIANAS (JRM)
GUAM

FY24 AUY183012 (P-012),
PDI: NORTH AIRCRAFT PARKING RAMP

ISOLATION VALVE VAULT - SECTIONS - SHEET 2

SCALE: AS SHOWN
EPROJECTS NO.: 1665555
CONSTR CONTROL NO.
NAVFAC DRAWING NO.
17361967
SHEET 344 OF 377

SF512

REDESIGN FINAL SUBMITTAL

FILE NAME: C:\Revit_Projects\P012-1665555-SSF-3D_mpatel@burnsmcd.com.rvt
LAYOUT NAME: ISOLATION VALVE VAULT - SECTIONS - SHEET 2
PLOTTED: 1/13/2026 3:01:15 PM
USER: MKP

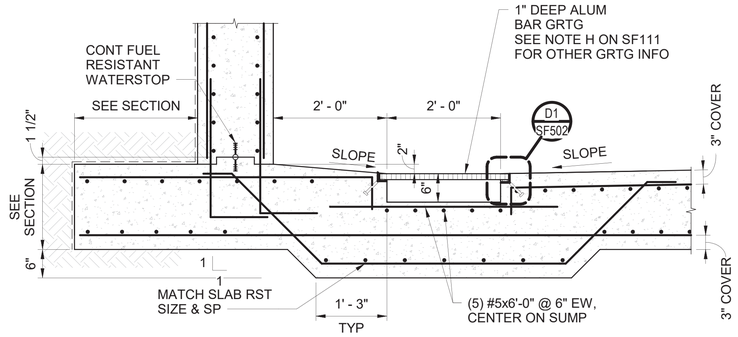

C1 DETAIL
SCALE: 3/4" = 1'-0"

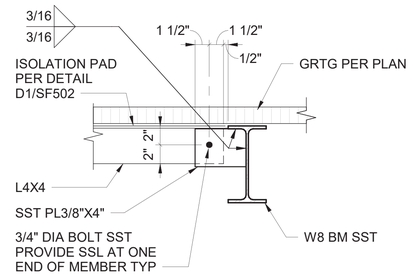

C2 PLATFORM SECTION OF ANGLE TO BEAM
SCALE: 1 1/2" = 1'-0"

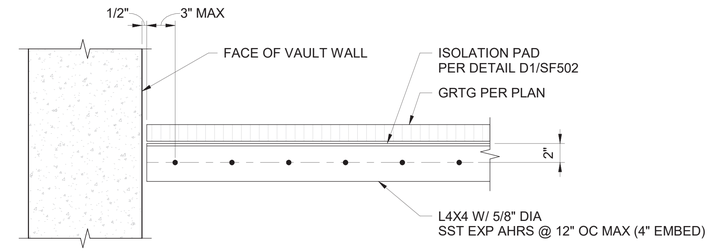

C4 PLATFORM SECTION OF ANGLE TO VAULT WALL
SCALE: 1 1/2" = 1'-0"

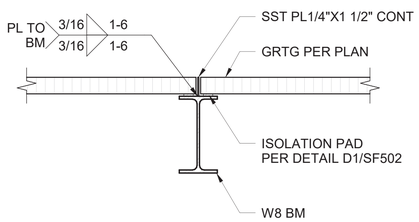

B1 PLATFORM SECTION OF BEAM
SCALE: 1 1/2" = 1'-0"

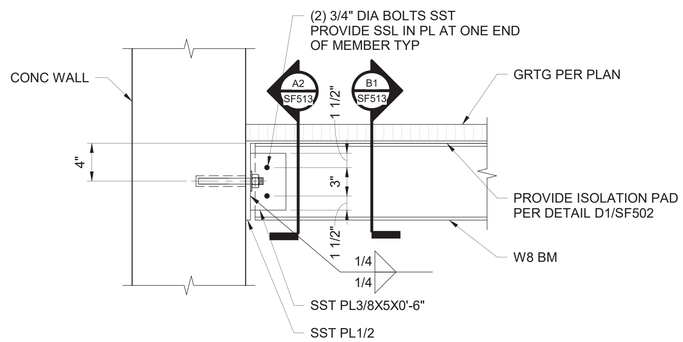

B2 PLATFORM SECTION OF BEAM TO VAULT WALL
SCALE: 1 1/2" = 1'-0"

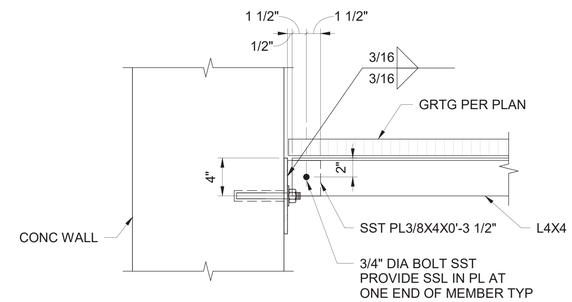

B4 PLATFORM SECTION OF ANGLE TO VAULT WALL
SCALE: 1 1/2" = 1'-0"

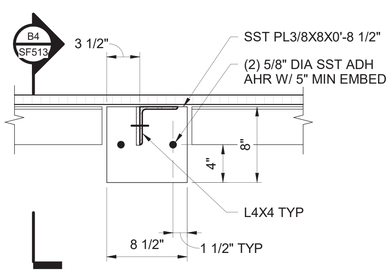

A1 PLATFORM SECTION OF ANGLE TO VAULT WALL
SCALE: 1 1/2" = 1'-0"

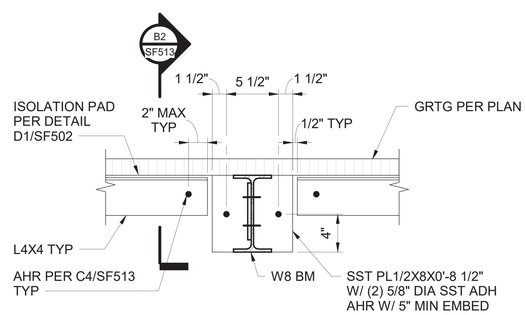

A2 PLATFORM SECTION OF BEAM TO VAULT WALL
SCALE: 1 1/2" = 1'-0"

SYM	DESCRIPTION	DATE

NAVFAC

STATE OF MISSOURI
A. HASSAN BAHUGUNA
NUMBER E-25085
REGISTERED PROFESSIONAL ENGINEER
01/13/2026
SEAL

Jacobs / BURNS McDONNELL

JACOBS/B&M, A JOINT VENTURE
1100 NORTH GLEBE ROAD
SUITE 500
ARLINGTON, VA 22201

A/E Contract No. N62470-20-D-0802
A/E Task Order No. N62742-19-1015
JKO NO. 204/3803

A/E INFO

APPROVED
Eva Mize
FOR COMMANDER NAVFAC DATE 02/02/2026

ACTIVITY
AFIMSC APPROVAL PER NAVFAC SAT-TO CHECKLIST

SATISFACTORY TO DATE 31 DEC 2025

DES: AHS	DRW: MKP	REV: JMH

PM/DM	KKK
BRANCH MANAGER	SMK
CHIEF ENG/ARCH	SMK
FIRE PROTECTION	RO

DEPARTMENT OF THE NAVY
NAVFAC PACIFIC
NAVAL FACILITIES ENGINEERING SYSTEMS COMMAND
NAVAL FACILITIES ENGINEERING SYSTEMS COMMAND – PACIFIC
JOINT REGION MARIANAS (JRM)
ANDERSEN AIR FORCE BASE
GUAM

FY24 AUY183012 (P-012)
PDI: NORTH AIRCRAFT PARKING RAMP

ISOLATION VALVE VAULT - SECTIONS AND DETAILS

SCALE: AS SHOWN
EPROJECTS NO.: 1665555
CONSTR CONTROL NO.
NAVFAC DRAWING NO. 17361968
SHEET 345 OF 377

SF513

REDESIGN FINAL SUBMITTAL

IF SHEET IS LESS THAN 22" X 34"
REDUCED PRINT. USE GRAPHIC SCALES

FILE NAME: C:\Revit_Projects\P012-1665555-SSF-3D_mpatel@burnsmcd.com.rvt
LAYOUT NAME: ISOLATION VALVE VAULT - SECTIONS AND DETAILS
PLOTTED: 1/13/2026 3:01:15 PM
USER: MKP

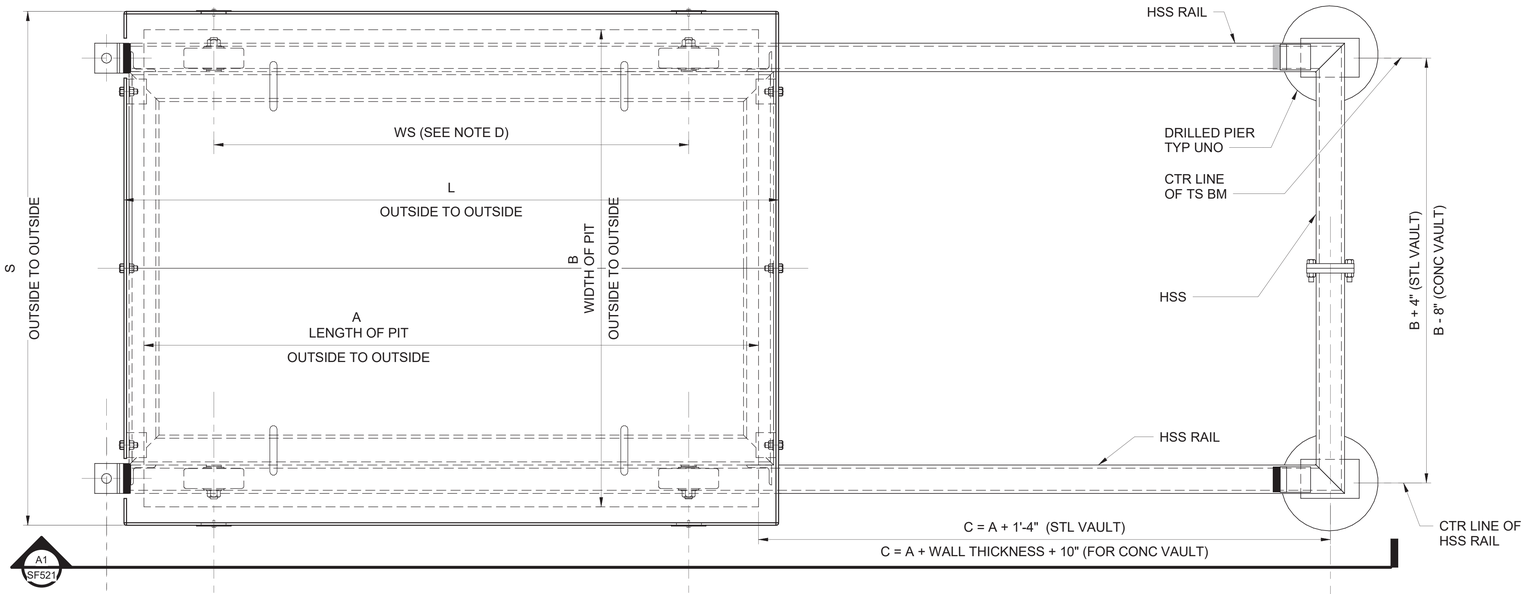

C1 PLAN
SCALE:NTS

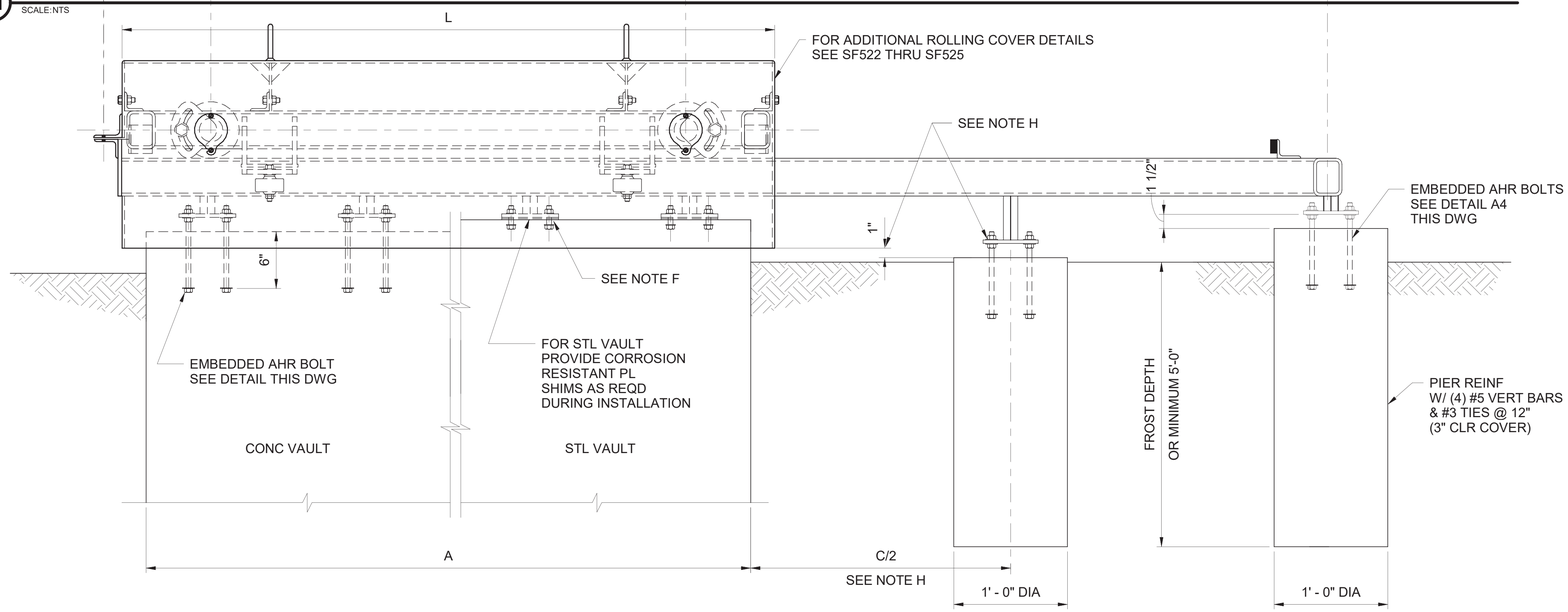

A1 ELEVATION
SCALE:NTS

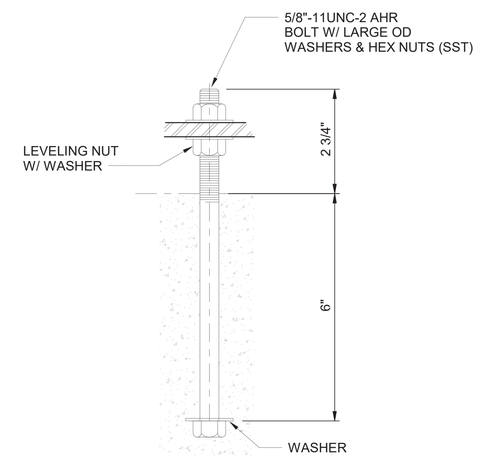

A4 ANCHOR BOLT DETAIL
SCALE:NTS

VAULT SCHEDULE

VAULT NO.	LOCATION REF. DRAWING	LENGTH A	WIDTH B	SHELL MATERIAL	TYPE	SHELL THICKNESS	STIFFENER THICKNESS	STEEL VAULT		CONCRETE VAULT	
								L= A + 10 5/8" + (2 x SHELL THICKNESS)	S= B + 1'-1" + (2 x SHELL THICKNESS)	L= A + 3 1/2" + (2 x SHELL THICKNESS)	S= B + 1" + (2 x SHELL THICKNESS)
IVV-1	SF111	17'-8"	16'-8"	ALUMINUM	6016-T6	1/4	1/4	N/A	N/A	18'-0"	16'-9 1/2"
IVV-2	SF112	18'-0"	19'-0"	ALUMINUM	6016-T6	1/4	1/4	N/A	N/A	18'-4"	19'-1 1/2"
–	–	–	–								
–	–	–	–								
–	–	–	–								

SHEET NOTES

A. SEE SF001 AND SF002 FOR STRUCTURAL GENERAL NOTES.
B. SEE SPECIFICATION SECTION 05 59 10 FOR ADDITIONAL ROLLING COVER REQUIREMENTS.
C. THE TRACK FOR ROLLING COVERS MUST BE SHIMMED TO MAKE LEVEL AT THE VAULT. THE TRACK AT THE CONCRETE POST MUST BE ADJUSTED WITH THE LEVELING NUTS. THE TRACK FOR CONCRETE ROLLING COVERS MUST BE LEVELED BY ADJUSTING THE LEVELING NUTS.
D. FIELD TEST THE ROLLING COVER TO ENSURE WHEEL ADJUSTMENTS TO ELIMINATE BINDING AND TRACK MISALIGNMENT. IN ADDITION, DEMONSTRATE TO THE CONTRACTING OFFICER THAT THE COVER AND COVER TRACKS ARE LEVEL.
E. IF "WS" (WHEEL SPACING) IS 8'-4" OR GREATER, A THIRD SET OF 6" DIA. WHEELS MUST BE PROVIDED AT "WS/2".
F. DRILL 3/4" DIA. MOUNTING HOLES IN STEEL VAULT ANGLE DURING INSTALLATION USING VAULT TRACK FOR TEMPLATE.
G. STRUCTURAL STEEL AND PLATES INCLUDING BOLTS, NUTS AND WASHERS FOR THE COVER AND RAIL SYSTEM MUST BE GALVANIZED STEEL AND THEN PAINTED, UNLESS OTHERWISE INDICATED ON THESE DRAWINGS.
H. IF "C" IS 8'-4" OR GREATER, THEN AN INTERMEDIATE CONCRETE PIER SIMILAR TO THE END PIER MUST BE ADDED AT A DISTANCE OF C/2. THE HEIGHT OF THIS CONCRETE PIER MUST BE A MINIMUM OF 1" BELOW THE ROLLING PIT COVER.
I. PROVIDE ISOLATION BETWEEN DISSIMILAR METALS.
J. ALUMINUM SHELL COVER MUST HAVE HEAVY-DUTY ANODIZED COATING. COORDINATE COLOR WITH CONTRACTING OFFICER.

SYM	DESCRIPTION	DATE

NAVFAC

STATE OF MISSOURI
A. HASSAN BAHUDDIN
NUMBER E-25085
REGISTERED PROFESSIONAL ENGINEER
01/13/2026
SEAL

Jacobs / BURNS McDONNELL
JACOBS/B&M, A JOINT VENTURE
1100 NORTH GLEBE ROAD
SUITE 500
ARLINGTON, VA 22201
A/E Contract No. N62742-20-D-0002
A/E Task Order No. N62742-FF2015
JEG NO. 234300003
A/E INFO

APPROVED
FOR COMMANDER NAVFAC DATE 02/02/2026

ACTIVITY
AFIMSC APPROVAL PER NAVFAC SAT-TO CHECKLIST

SATISFACTORY TO DATE 31 DEC 2025

DES: AHS DRW: MKP REV: JMH
PM/DM KKK
BRANCH MANAGER SMK
CHIEF ENG/ARCH SMK
FIRE PROTECTION RO

DEPARTMENT OF THE NAVY
NAVAL FACILITIES ENGINEERING SYSTEMS COMMAND
NAVFAC PACIFIC
NAVAL FACILITIES ENGINEERING SYSTEMS COMMAND – PACIFIC
JOINT REGION MARIANAS (JRM)
ANDERSEN AIR FORCE BASE
GUAM

FY24 AJJY183012 (P-012),
PDI: NORTH AIRCRAFT PARKING RAMP

ROLLING COVER - SHEET 1

SCALE: AS SHOWN
EPROJECTS NO.: 1665555
CONSTR CONTROL NO.
NAVFAC DRAWING NO. 17361969
SHEET 346 OF 377
SF521

REDESIGN FINAL SUBMITTAL

FILE NAME: C:\Revit_Projects\P012-1665555-SSF-3D_mpatel@burnsmcd.com.rvt
LAYOUT NAME: ROLLING COVER - SHEET 1
PLOTTED: 1/13/2026 3:01:16 PM
USER: MKP

IF SHEET IS LESS THAN 22" X 34"
REDUCED PRINT. USE GRAPHIC SCALES

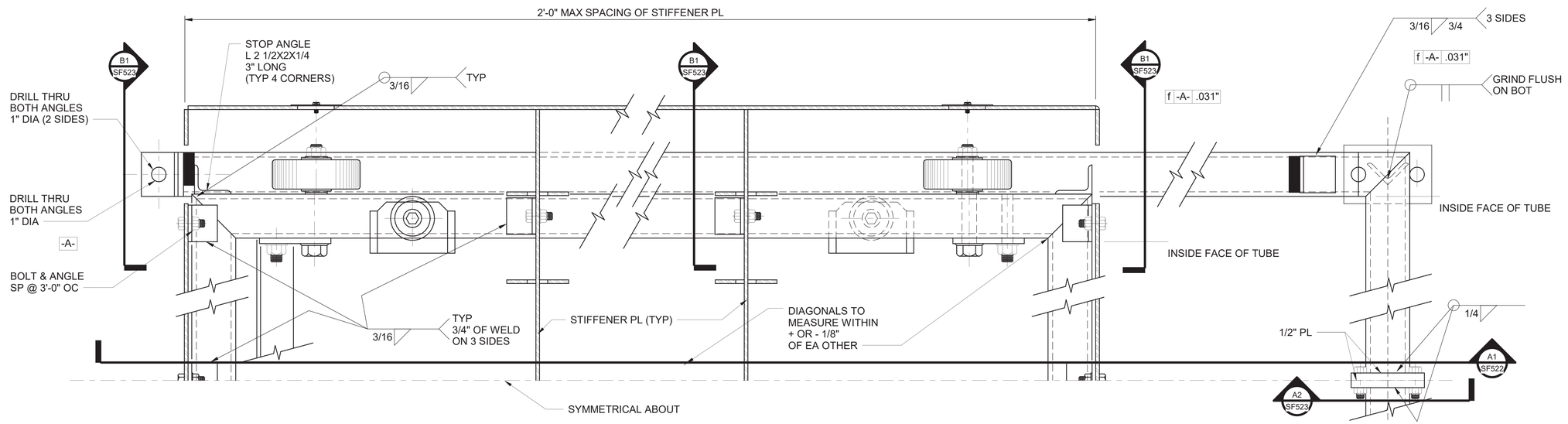

C1 HALF PLAN
SCALE:NTS

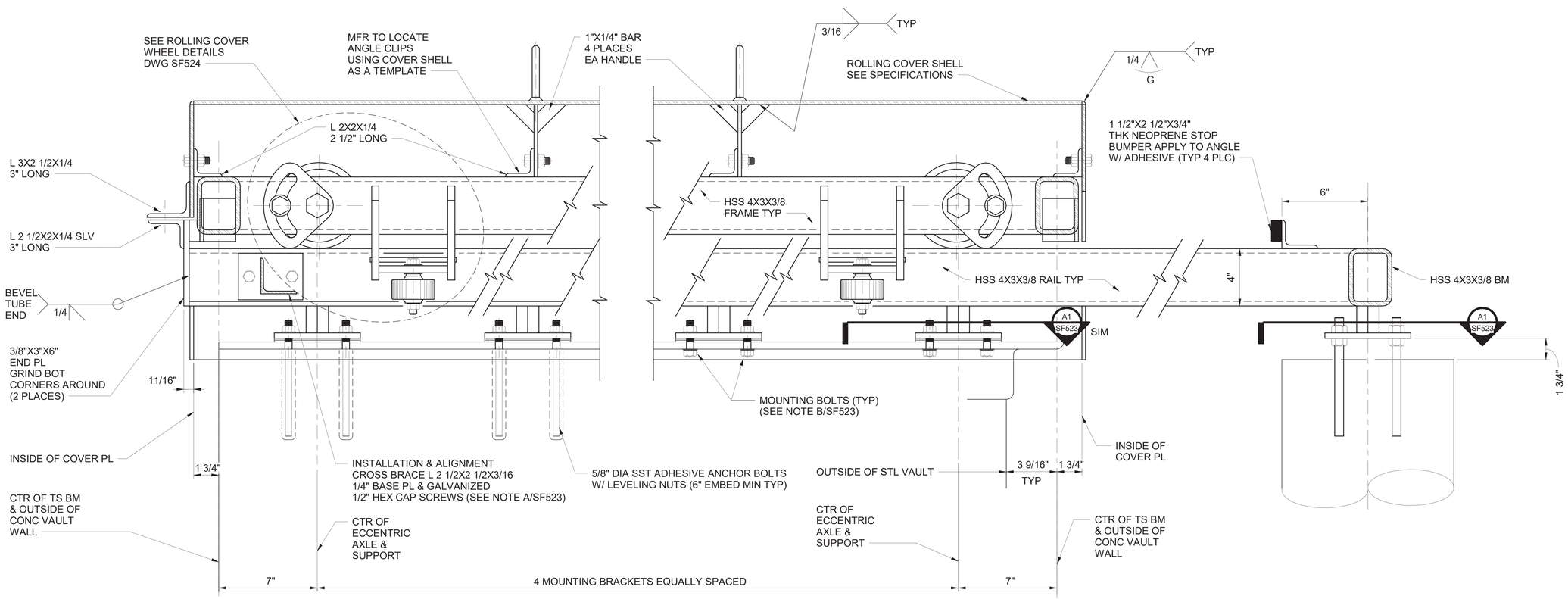

A1 SECTION
SCALE:NTS

SYM	DESCRIPTION	DATE

NAVFAC

STATE OF MISSOURI
A. HASSAN BAHUMDAN
NUMBER E-25085
REGISTERED PROFESSIONAL ENGINEER
01/13/2026
SEAL

Jacobs / BURNS McDONNELL

JACOBS/B&M, A JOINT VENTURE
1100 NORTH GLEBE ROAD
SUITE 500
ARLINGTON, VA 22201

A/E Contract No. N62742-20-D-0002
A/E Task Order No. N62742-FF0315
JEG NO. 234306003

A/E INFO

APPROVED
FOR COMMANDER NAVFAC DATE 02/02/2026

ACTIVITY
AFIMSC APPROVAL PER NAVFAC SAT-TO CHECKLIST

SATISFACTORY TO DATE 31 DEC 2025

DES:	AHS	DRW:	MKP	REV:	JMH
PM/DM					KKK
BRANCH MANAGER					SMK
CHIEF ENG/ARCH					SMK
FIRE PROTECTION					RO

DEPARTMENT OF THE NAVY
NAVAL FACILITIES ENGINEERING SYSTEMS COMMAND
NAVFAC PACIFIC
NAVAL FACILITIES ENGINEERING SYSTEMS COMMAND – PACIFIC
JOINT REGION MARIANAS (JRM)
ANDERSEN AIR FORCE BASE
GUAM

FY24 AJJY183012 (P-012),
PDI: NORTH AIRCRAFT PARKING RAMP

ROLLING COVER - SHEET 2

SCALE: AS SHOWN
EPROJECTS NO.: 1665555
CONSTR CONTROL NO.

NAVFAC DRAWING NO.
17361970

SHEET 347 OF 377

SF522

REDESIGN FINAL SUBMITTAL

FILE NAME: C:\Revit_Projects\P012-1665555-SSF-3D_mpatel@burnsmcd.com.rvt
LAYOUT NAME: ROLLING COVER - SHEET 2
PLOTTED: 1/13/2026 3:01:16 PM
USER: MKP

IF SHEET IS LESS THAN 22" X 34"
REDUCED PRINT. USE GRAPHIC SCALES

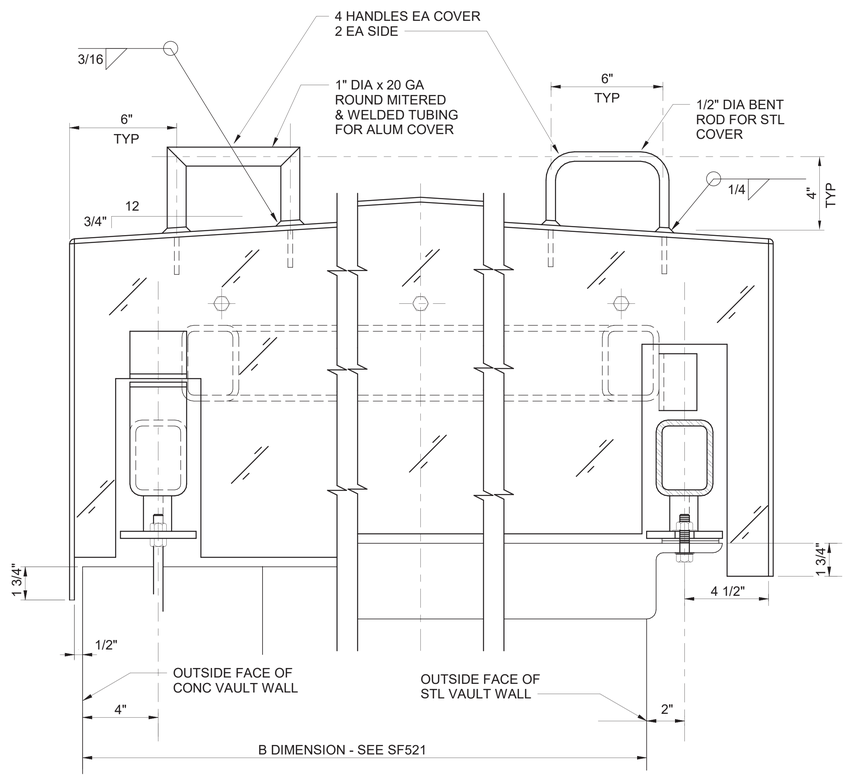

B1 SECTIONAL AT END ELEVATION
SCALE:NTS

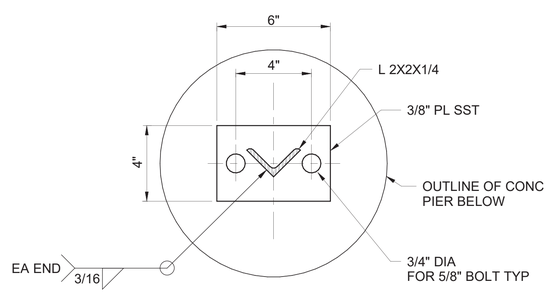

A1 SECTION
SCALE:NTS

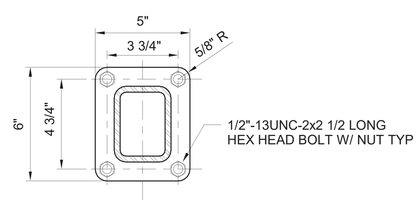

A2 SECTION
SCALE:NTS

SHEET NOTES

A. PROVIDE INSTALLATION AND ALIGNMENT CROSS BRACE CONSISTING OF UNFINISHED STEEL L2 1/2 X 2 1/2 X 3/16, TWO 1/4" END PLATES, AND FOUR GALVANIZED 1/2" - 13UNC-2A HEX HEAD CAP SCREWS FOR EACH COVER. REMOVE BRACE FOR SHIPPING, TEMPORARILY REINSTALL FOR COVER INSTALLATION, AND THEN REMOVE AND DISCARD. PROVIDE ONE SET OF BRACE FOR EACH VAULT SIZE. REINSTALL SCREWS IN TUBES TO PLUG HOLES. BRACE MUST BE USED AS WIDTH TEMPLATE FOR SAME SIZE COVERS.

B. 1/2"-13UNC-2 HEX. BOLTS (2 1/4" LONG), HEX NUTS AND 2 LARGE OVERSIZED WASHERS PER BOLT MUST BE PROVIDED WITH COVERS FABRICATED FOR STEEL VAULTS. ALL ITEMS MUST BE GALVANIZED STEEL.

C. PARTS DISASSEMBLED FOR SHIPPING MUST BE MATCH MARKED FOR REASSEMBLY IN FIELD.

D. FERROUS STEEL WELDMENTS MUST BE GALVANIZED AND THEN PAINTED.

SYM	DESCRIPTION	DATE

NAVFAC

STATE OF MISSOURI
A. HASSAN BAHUDDIN
NUMBER E-25085
REGISTERED PROFESSIONAL ENGINEER
01/13/2026
SEAL

Jacobs / BURNS McDONNELL

JACOBS/B&M, A JOINT VENTURE
1100 NORTH GLEBE ROAD
SUITE 500
ARLINGTON, VA 22201
A/E Contract No. N62470-20-D-0002
A/E Task Order No. N62742-FF3015
JKO NO. 2DA0863
A/E INFO

APPROVED
FOR COMMANDER NAVFAC DATE 02/02/2026

ACTIVITY
AFIMSC APPROVAL PER NAVFAC SAT-TO CHECKLIST

SATISFACTORY TO DATE 31 DEC 2025

DES: AHS	DRW: MKP	REV: JMH

PM/DM KKK
BRANCH MANAGER SMK
CHIEF ENG/ARCH SMK
FIRE PROTECTION RO

DEPARTMENT OF THE NAVY
NAVAL FACILITIES ENGINEERING SYSTEMS COMMAND
NAVFAC PACIFIC
NAVAL FACILITIES ENGINEERING SYSTEMS COMMAND ~ PACIFIC
JOINT REGION MARIANAS (JRM)
ANDERSEN AIR FORCE BASE
GUAM

FY24 AJUY183012 (P-012),
PDI: NORTH AIRCRAFT PARKING RAMP

ROLLING COVER - SHEET 3

SCALE: AS SHOWN
EPROJECTS NO.: 1665555
CONSTR CONTROL NO.
NAVFAC DRAWING NO.
17361971
SHEET 348 OF 377

SF523

REDESIGN FINAL SUBMITTAL

IF SHEET IS LESS THAN 22" X 34"
REDUCED PRINT. USE GRAPHIC SCALES

FILE NAME: C:\Revit_Projects\P012-1665555-SSF-3D_mpatel@burnsmcd.com.rvt
LAYOUT NAME: ROLLING COVER - SHEET 3
PLOTTED: 1/13/2026 3:01:16 PM
USER: MKP

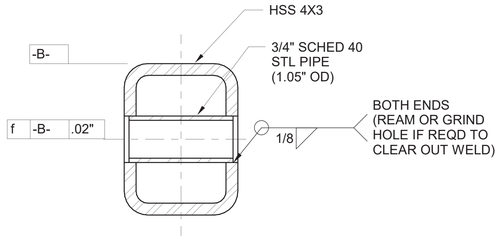

C1 AXLE SLEEVE DETAIL
SCALE:NTS

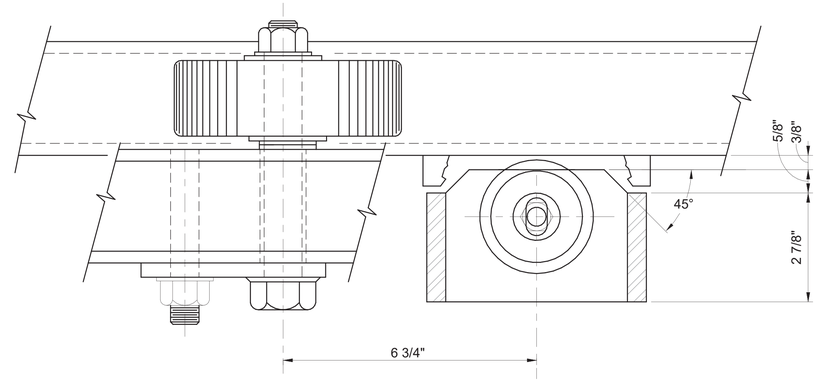

C2 PARTIAL PLAN
SCALE:NTS

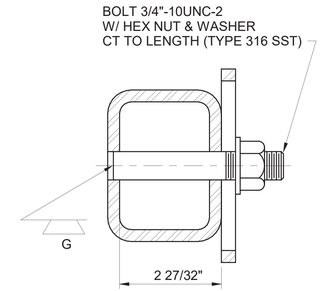

C4 SECTION
SCALE:NTS

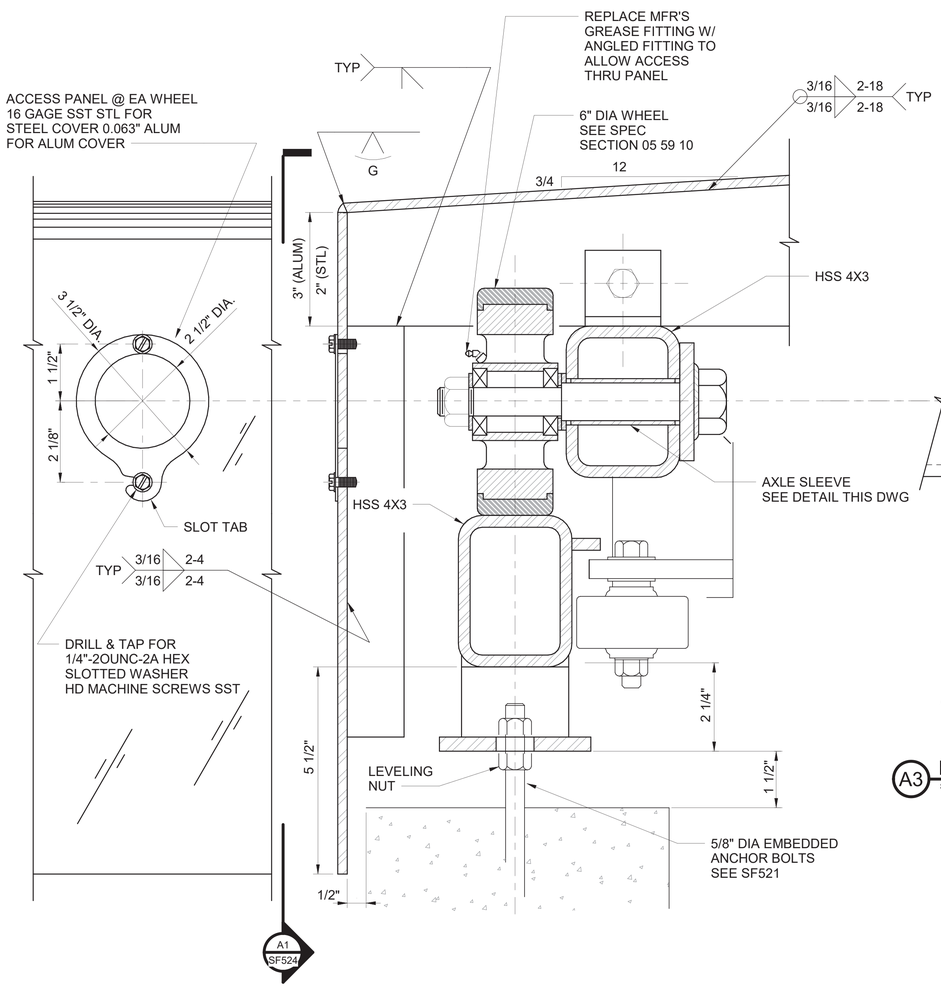

A1 EXTERIOR SIDE VIEW
SCALE:NTS

A2 SECTION AT PIER AND CONCRETE VAULT WALL
SCALE:NTS

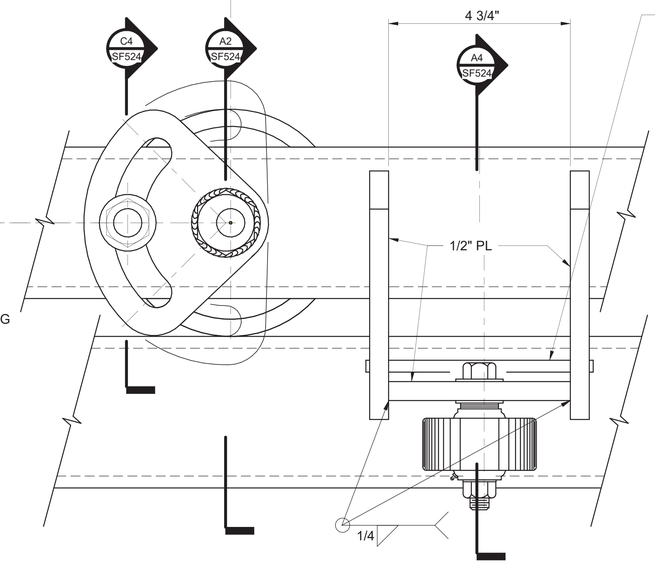

A3 ROLLING COVER WHEEL DETAIL ELEVATION
SCALE:NTS

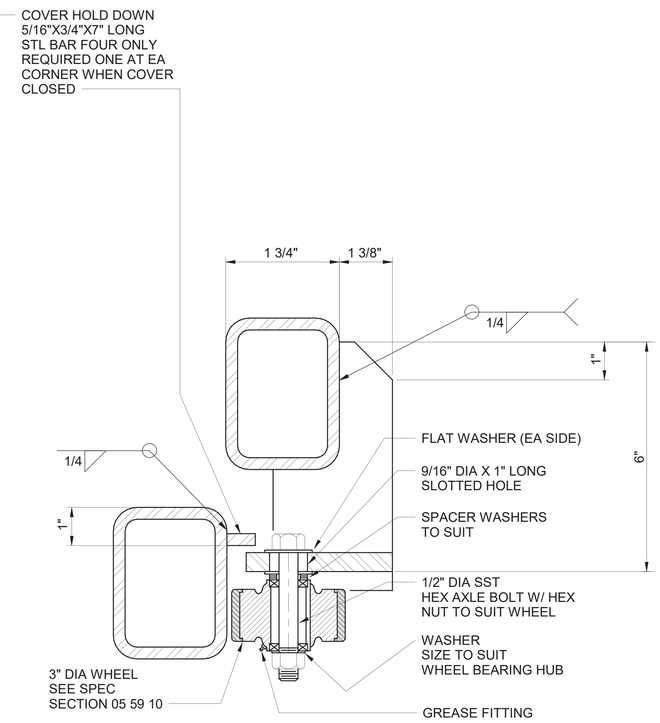

A4 SECTION
SCALE:NTS

SYM	DESCRIPTION	DATE

NAVFAC

STATE OF MISSOURI
A. HASSAN BAHUDDIN
NUMBER E-25085
REGISTERED PROFESSIONAL ENGINEER
01/13/2026
SEAL

Jacobs / BURNS McDONNELL

JACOBS/B&M, A JOINT VENTURE
1100 NORTH GLEBE ROAD
SUITE 500
ARLINGTON, VA 22201

A/E Contract No. N62470-20-D-0002
A/E Task Order No. N62470-FF3115
JKO NO. 204/24063

A/E INFO

APPROVED
Eva Mejia
FOR COMMANDER NAVFAC DATE 02/02/2026

ACTIVITY
AFIMSC APPROVAL PER NAVFAC SAT-TO CHECKLIST

SATISFACTORY TO DATE 31 DEC 2025

DES: AHS	DRW: MKP	REV: JMH

PM/DM KKK
BRANCH MANAGER SMK
CHIEF ENG/ARCH SMK
FIRE PROTECTION RO

DEPARTMENT OF THE NAVY
NAVAL FACILITIES ENGINEERING SYSTEMS COMMAND
NAVFAC PACIFIC
NAVAL FACILITIES ENGINEERING SYSTEMS COMMAND ~ PACIFIC
JOINT REGION MARIANAS (JRM)
ANDERSEN AIR FORCE BASE
GUAM

FY24 AJJY183012 (P-012),
PDI: NORTH AIRCRAFT PARKING RAMP

ROLLING COVER - SHEET 4

SCALE: AS SHOWN
EPROJECTS NO.: 1665555
CONSTR CONTROL NO.
NAVFAC DRAWING NO. 17361972
SHEET 349 OF 377
SF524

REDESIGN FINAL SUBMITTAL

FILE NAME: C:\Revit_Projects\P012-1665555-SSF-3D_mpatel@burnsmcd.com.rvt
LAYOUT NAME: ROLLING COVER - SHEET 4
PLOTTED: 1/13/2026 3:01:17 PM
USER: MKP

IF SHEET IS LESS THAN 22" X 34"
REDUCED PRINT. USE GRAPHIC SCALES

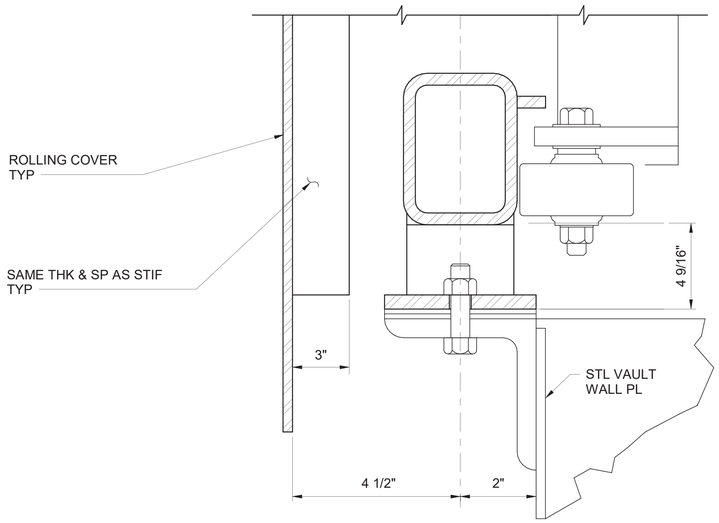

C1 SECTION AT METAL VAULT
SCALE:NTS

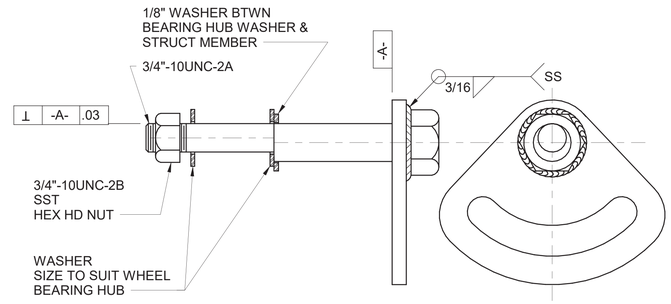

C3 ECCENTRIC AXLE ASSEMBLY DETAIL
SCALE:NTS

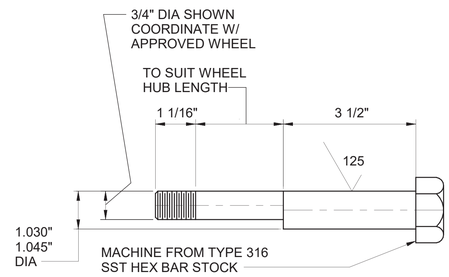

B3 ECCENTRIC BOLT DETAIL
SCALE:NTS

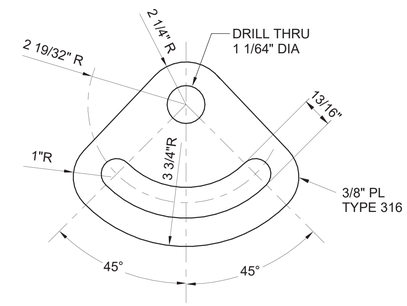

B4 ADJUSTER DETAIL
SCALE:NTS

SYM	DESCRIPTION	DATE

NAVFAC

STATE OF MISSOURI
A. HASSAN BAHUDDIN
NUMBER E-25085
REGISTERED PROFESSIONAL ENGINEER
01/13/2026
SEAL

Jacobs / BURNS McDONNELL

JACOBS/B&M, A JOINT VENTURE
1100 NORTH GLEBE ROAD
SUITE 500
ARLINGTON, VA 22201

A/E Contract No. N62470-20-D-0002
A/E Task Order No. N62470-FF-019
JKO NO. 204/3663

A/E INFO

APPROVED
Eva Mize
FOR COMMANDER NAVFAC DATE 02/02/2026

ACTIVITY
AFIMSC APPROVAL PER NAVFAC SAT-TO CHECKLIST

SATISFACTORY TO DATE 31 DEC 2025

DES: AHS	DRW: MKP	REV: JMH

PM/DM KKK
BRANCH MANAGER SMK
CHIEF ENG/ARCH SMK
FIRE PROTECTION RO

DEPARTMENT OF THE NAVY
NAVFAC PACIFIC
NAVAL FACILITIES ENGINEERING SYSTEMS COMMAND
NAVAL FACILITIES ENGINEERING SYSTEMS COMMAND ~ PACIFIC
JOINT REGION MARIANAS (JRM)
ANDERSEN AIR FORCE BASE
GUAM
FY24 AUY183012 (P-012),
PDI: NORTH AIRCRAFT PARKING RAMP
ROLLING COVER - SHEET 5

SCALE: AS SHOWN
EPROJECTS NO.: 1665555
CONSTR CONTROL NO.
NAVFAC DRAWING NO. 17361973
SHEET 350 OF 377

SF525

REDESIGN FINAL SUBMITTAL

IF SHEET IS LESS THAN 22" X 34"
REDUCED PRINT. USE GRAPHIC SCALES

FILE NAME: C:\Revit_Projects\P012-1665555-SSF-3D_mpatel@burnsmcd.com.rvt
LAYOUT NAME: ROLLING COVER - SHEET 5
PLOTTED: 1/13/2026 3:01:17 PM
USER: MKP

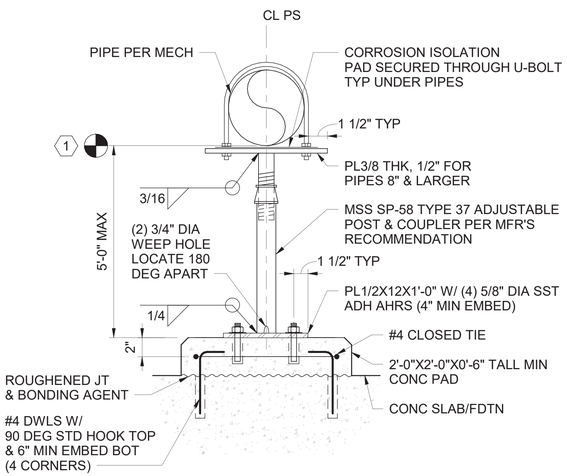

C1 PIPE SUPPORT TYPE PS-1 (V-STOP)
SCALE:NTS

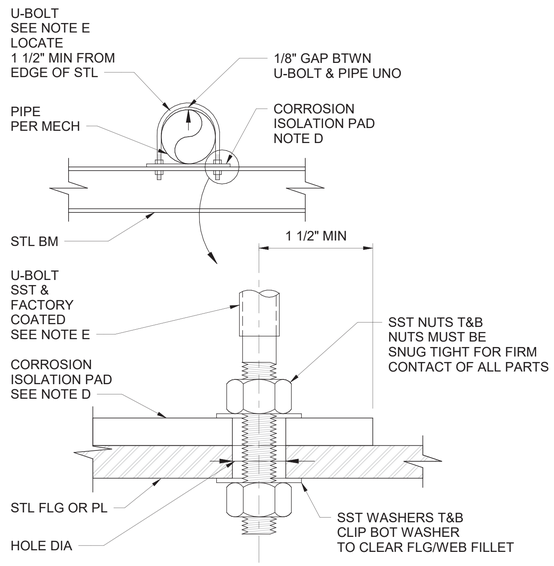

C2 TYPICAL U-BOLT INSTALLATION
SCALE:NTS

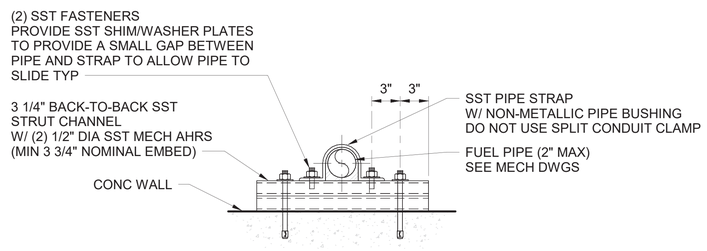

B1 PIPE SUPPORT ON WALL TYPE PS-2
SCALE:NTS

SHEET NOTES

A. SEE SF001 AND SF002 FOR STRUCTURAL GENERAL NOTES.
B. SEE MECHANICAL FOR PIPE SIZES, SUPPORT TYPES AND LOCATIONS.
C. UNLESS INDICATED OTHERWISE, STRUCTURAL STEEL PIPE SUPPORTS AND ASSEMBLIES MUST BE STAINLESS STEEL TYPE 316.
D. CORROSION ISOLATION PADS WITH MAXIMUM STATIC COEFFICIENT OF FRICTION OF 0.20 ARE REQUIRED AT FUEL PIPES TO SUPPORT INTERFACES, UNLESS INDICATED OTHERWISE. CORROSION ISOLATION PADS MUST BE INSTALLED ONLY AFTER PIPES HAVE BEEN COATED (WHERE APPLICABLE).
   1. TEFLON (PTFE) IS AN ACCEPTABLE CORROSION ISOLATION MATERIAL. DO NOT USE ALTERNATE LOW FRICTION MATERIALS WITHOUT PRIOR WRITTEN APPROVAL FROM THE CONTRACTING OFFICER.
   2. NOMINAL PAD THICKNESS MUST BE 1/4" MIN (UNO).
   3. UNLESS NOTED OTHERWISE, PAD BEARING LENGTHS MUST BE AT LEAST 4" MINIMUM. PADS DO NOT NEED TO BE WIDER THAN THE BEAM OR CHANNEL FLANGE TO WHICH THEY ARE ATTACHED TO. PADS MUST BE CENTERED (+/- 1") OVER W-SHAPE BEAM CENTERLINES AND FLUSH WITH THE BACK OF C SHAPE CHANNELS, UNLESS INDICATED OR NOTED OTHERWISE.
   4. UNLESS INDICATED OTHERWISE, PADS MUST BE ATTACHED TO STEEL SUPPORTS WITH #12 TEK TYPE STAINLESS STEEL SCREWS. USE 2 SCREWS PER PIPE, ONE EACH SIDE, FOR PIPES UP TO AND INCLUDING 8" NOMINAL DIAMETER. USE 4 SCREWS PER PIPE, TWO EACH SIDE, FOR 10" NOMINAL DIAMETER AND LARGER PIPES. PLACE SCREWS AT 1/2 THE PIPE DIAMETER, BUT NOT LESS THAN 3", FROM THE PIPE CENTERLINE. SCREW CENTERLINES MUST BE AT LEAST 3/4" FROM THE PAD EDGES. BOLTS (1/4" DIAMETER SAE GRADE 5) MAY BE USED INSTEAD OF SCREWS. POWDER ACTUATED PINS (I.E. HILTI X-U, OR APPROVED EQUAL) WITH 5/8" WASHERS MAY BE USED INSTEAD OF SCREWS.
   5. SCREWS FOR THE CORROSION ISOLATION PADS MAY BE OMITTED IF THE U-BOLTS ARE PLACED THROUGH THE PADS. BOLT HOLES MUST BE AT LEAST 3/4" CLEAR FROM THE PAD EDGES AND THE PADS MUST BE LAPPED OVER W-SHAPE BEAM CENTERLINES AT EAST 1". OVERSIZED CORROSION ISOLATION PADS MAY BE NEEDED TO SATISFY THESE REQUIREMENTS.
   6. INDIVIDUAL PADS MAY BE USED FOR EACH PIPE, OR CONTINUOUS STRIPS MAY BE USED FOR MULTIPLE PIPES.
E. U-BOLT REQUIREMENTS, UNLESS NOTED OTHERWISE:
   1. U-BOLTS MUST CONFORM TO MSS SP-58.
   2. COORDINATE U-BOLT SIZE WITH PIPE SIZE AS INDICATED IN THE TABLE BELOW.
   3. PROVIDE DOUBLE NUTS AT U-BOLTS UNLESS NOTED OTHERWISE.
   4. INSTALL U-BOLTS WITH 1/8" GAP TO TOP OF THE PIPES, SNUG ON SIDES.
   5. U-BOLTS MUST BE STAINLESS STEEL UNLESS NOTED OTHERWISE, THEN FACTORY-COATED WITH 1/16" THICK MINIMUM SEAMLESS NON-METALLIC LOW FRICTION THERMOPLASTIC OR POLYOLEFIN COATING FOR CORROSION ISOLATION.

U-BOLT SIZE TABLE

PIPE SIZE (in.)	U-BOLT SIZE (in.)	MAX HOLE DIAMETER (in.)
≤ 2	3/8	1/2
2 1/2 - 5	1/2	5/8
6 - 8	5/8	13/16
10	3/4	15/16
12 - 16	7/8	1 1/16
≥ 18	1	1 1/4

F. UTILIZE FUEL RESISTANT COMPOUND FOR ADHESIVE ANCHORS.
G. WHERE GAPS ARE INDICATED, VERIFY THAT PIPES AND PIPE SUPPORT ASSEMBLIES ARE CONSTRUCTED AND INSTALLED WITH GAPS ON EACH SIDE. ASSUMED INSTALLATION TEMPERATURE (PIPE SURFACE) WAS 75 DEG-F FOR GAP MEASUREMENT PURPOSES. PROVIDE SHIMS AND BLOCKING TO MAINTAIN REQUIRED GAPS THROUGHOUT CONSTRUCTION.
H. PROVIDE ANTI-SEIZE COMPOUND ON MATING SURFACES OF THREADED STAINLESS STEEL FASTENERS.
I. SUBMIT THE FOLLOWING FOR APPROVAL BY ENGINEER PRIOR TO FABRICATION OR PROCUREMENT:
   1. PIPE SUPPORT AND ASSEMBLY SHOP DRAWINGS.
   2. U-BOLT PRODUCT DATA.
   3. CORROSION ISOLATION PAD DATA.

SHEET KEYNOTES

1. COORDINATE WITH MECHANICAL FOR THE LOCATIONS, DIMENSIONS, AND ELEVATIONS OF PIPING AND REQUIRED SUPPORTS.

SYM	DESCRIPTION	DATE

NAVFAC

STATE OF MISSOURI
A. HASSAN BAHOUR
NUMBER E-25085
REGISTERED PROFESSIONAL ENGINEER
01/13/2026
SEAL

Jacobs / BURNS McDONNELL
JACOBS/B&M, A JOINT VENTURE
1100 NORTH GLEBE ROAD
SUITE 500
ARLINGTON, VA 22201
A/E Contract No. N62470-20-D-0002
A/E Task Order No. N62742-FF-0015
JKO NO. 204306R3
A/E INFO

APPROVED
FOR COMMANDER NAVFAC DATE 02/02/2026

ACTIVITY
AFIMSC APPROVAL PER NAVFAC SAT-TO CHECKLIST

SATISFACTORY TO DATE 31 DEC 2025

DES: AHS	DRW: MKP	REV: JMH	
PM/DM			KKK
BRANCH MANAGER			SMK
CHIEF ENG/ARCH			SMK
FIRE PROTECTION			RO

DEPARTMENT OF THE NAVY
NAVAL FACILITIES ENGINEERING SYSTEMS COMMAND
NAVFAC PACIFIC
NAVAL FACILITIES ENGINEERING SYSTEMS COMMAND ~ PACIFIC
JOINT REGION MARIANAS (JRM)
ANDERSEN AIR FORCE BASE
GUAM

FY24 AJJY183012 (P-012),
PDI: NORTH AIRCRAFT PARKING RAMP

PIPE SUPPORT DETAILS

SCALE: AS SHOWN
EPROJECTS NO.: 1665555
CONSTR CONTROL NO.
NAVFAC DRAWING NO. 17361974
SHEET 351 OF 377

SF551

REDESIGN FINAL SUBMITTAL

IF SHEET IS LESS THAN 22" X 34" REDUCED PRINT. USE GRAPHIC SCALES

FILE NAME: C:\Revit_Projects\P012-1665555-SSF-3D_mpatel@burnsmcd.com.rvt
LAYOUT NAME: PIPE SUPPORT DETAILS
PLOTTED: 1/13/2026 3:01:17 PM
USER: MKP

LEGEND

- BALL VALVE
- BLIND FLANGE
- DOUBLE BLOCK AND BLEED VALVE
- FLANGE
- FLOW ARROW
- H — HYDRANT PIT
- HYDRANT VALVE
- IF — ISOLATION FLANGE
- PB — PROTECTIVE BAND
- REDUCER CONCENTRIC
- REDUCER ECCENTRIC
- B — THERMAL RELIEF VALVE, BALANCED TYPE
- WELD CAP

STANDARD ABBREVIATIONS

3D	3 PIPE DIAMETERS	LPD	LOW POINT DRAIN
AG	ABOVE GROUND	LR	LINE RELIEF
AL	ALUMINUM	M	MOTOR
B	BALANCED TYPE	MAV	MANUAL AIR VENT
BV	BALL VALVE	MC	MOTOR CONTROL
CS	CARBON STEEL	MPC	METER PROVER CONNECTION
DBB	DOUBLE BLOCK & BLEED	NATO	NORTH ATLANTIC TREATY ORGANIZATION
DEG	DEGREE	NEMA	NATIONAL ELECTRICAL MANUFACTURER
DIA	DIAMETER	NC	NORMALLY CLOSED
DR	DRAIN	NO	NORMALLY OPEN
FB	FULL BORE (VALVE)	NOM	NOMINAL
FBE	FUSION BONDED EPOXY	NPT	NATIONAL PIPE THREAD
FF	FLAT FACED	OD	OUTER DIAMETER
FM	FLOW METER	OPV	OVERFILL PREVENTION VALVE
FOT	FLAT ON TOP	PB	PROTECTIVE BAND
FQI	FLOW QUANTITY INDICATOR	PS	PIPE SUPPORT
FMS	FUEL MANAGEMENT SYSTEM	PSIG	POUNDS PER SQUARE INCH GAUGE
FS	FLOW SWITCH	PVV	PRESSURE VACUUM VENT
GPM	GALLONS PER MINUTE	RED	REDUCER
HV	HYDRANT VALVE	S	SOLENOID, STRAINER OR SAMPLE
HG	MERCURY	SCH	SCHEDULE
HOA	HAND-OFF-AUTO	SS	STAINLESS STEEL
HP	HYDRANT PIT	SW	SOCKET WELD
HPV	HIGH POINT VENT	THK	THICK
HS	HAND SWITCH	TRV	THERMAL RELIEF VALVE
IF	DIELECTRIC GASKET	TSH	TEMPERATURE SWITCH HIGH
IVV	ISOLATION VALVE VAULT	TYP	TYPICAL
JP-8	JP-8 GRADE JET FUEL	UG	UNDER GROUND
JY	SOLENOID PILOT	W/	WITH
LO	LOCKED OPEN	XS	EXTRA-STRONG

PLAN, SECTION, AND DETAIL IDENTIFICATION

A1 PLAN TITLE
SCALE: 1/4"=1'-0"

C1 DETAIL/SECTION TITLE
SCALE: NTS

LETTER INDICATES GRID LOCATION WHERE DETAIL/SECTION IS SHOWN

SECTION DESIGNATION CORRESPONDS WITH GRID WHERE DETAIL/SECTION IS LOCATED

SHEET NUMBER WHERE DETAIL/SECTION IS SHOWN

A1 MF###

OR

A1 MF####

A1 MF###

DESIGNATION CORRESPONDS WITH GRID WHERE ENLARGED PLAN IS LOCATED

SHEET NUMBER WHERE ENLARGED PLAN IS SHOWN

CONSTRUCTION INTERFACE

EXISTING TO REMAIN — DEMOLITION

EXISTING TO REMAIN — NEW WORK

PIPING DESIGNATIONS

- ABOVEGROUND PIPING
- UNDERGROUND PIPING
- EXISTING ABOVEGROUND PIPING
- EXISTING UNDERGROUND PIPING
- HYDRAULIC SIGNAL
- ELECTRICAL SIGNAL
- CONTROL SIGNAL

INSTRUMENT IDENTIFICATION LEGEND

- LOCAL, FIELD MOUNTED INSTRUMENT
- MAIN, CENTRAL PANEL MOUNTED INSTRUMENT
- LOCAL, FIELD MOUNTED DISPLAY
- MAIN, CENTRAL PANEL MOUNTED DISPLAY
- MAIN, CENTRAL MOUNTED MICROPROCESSOR

- I — CONTROL/INTERLOCK SCHEME
- M — MOTOR
- PLC — PROGRAMMABLE LOGIC CONTROLLER
- PCP — PUMP CONTROL PANEL
- AFHE — AUTOMATED FUELS HANDLING EQUIPMENT
- FAS — FUELS AUTOMATED SYSTEM

INSTRUMENT IDENTIFICATION KEY

	FIRST LETTER		SUCCEEDING LETTERS		
	MEASURED FOR INITIATING VARIABLE	MODIFIER	REDOUT OF PASSIVE FUNCTION	OUTPUT FUNCTION	MODIFIER
A	ANALYSIS		ALARM		
B	BURNER FLAME				
C	CONDUCTIVITY (ELECTRICAL)			CONTROL	
D	SPECIFIC GRAVITY	DIFFERENTIAL			
E	VOLTAGE (EMF)		PRIMARY ELEMENT		
F	FLOW RATE	RATIO (FRACTION)			
G	GAUGING (DIMENSIONAL)		GLASS		
H	HAND (MANUALLY INITIATED)				HIGH
I	CURRENT (ELECTRICAL)		INDICATE		
J	POWER				
K	TIME			CONTROL STATION	
L	LEVEL		LIGHT (PILOT)		LOW
M	MOISTURE OR HUMIDITY				MIDDLE OR INTERMEDIATE
N					
O			ORIFICE (RESTRICTION)		
P	PRESSURE OR VACUUM			POINT (TEST) CONNECTION	
Q	QUANTITY OR EVENT	INTEGRATE OR TOTALIZE			
R	RADIOACTIVITY		RECORD OR PRINT		
S	SPEED OR FREQUENCY	SAFETY		SWITCH	
T	TEMPERATURE			TRANSMIT	
U	MULTIVARIABLE		MULTIFUNCTION	MULTIFUNCTION	MULTIFUNCTION
V	VIBRATION			VALVE, DAMPER OR LOUVER	
W	WEIGHT OR FORCE		WELL		
X	UNCLASSIFIED		UNCLASSIFIED	UNCLASSIFIED	UNCLASSIFIED
Y	USER'S CHOICE			RELAY OR COMPUTER	
Z	POSITION			DRIVE, ACTUATE, OR UNCLASSIFIED FINAL CONTROL ELEMENT	

* ANY DEVIATIONS TO THE KEY ARE LISTED AS MECHANICAL ABBREVIATIONS.

NOTES:
INSTRUMENT IDENTIFICATION AND KEY MEET ISA REQUIREMENTS. CONTRACTOR MUST MEET ISA 5.1, INSTRUMENTATION SYMBOLS AND IDENTIFICATION, IN PREPARING INSTRUMENT DIAGRAMS.

NAVFAC

STATE OF TEXAS
GAURAV SINGH SEHRA
118502
LICENSED PROFESSIONAL ENGINEER
01/15/2026
SEAL

Jacobs / BURNS McDONNELL
JACOBS/B&M, A JOINT VENTURE
1100 NORTH GLEBE ROAD
SUITE 500
ARLINGTON, VA 22201

A/E Contract No. N62742-20-D-0002
A/E Task Order No. N6274221F0315
JCG NO. 015430603
A/E INFO

APPROVED
FOR COMMANDER NAVFAC DATE 02/02/2026

ACTIVITY
AFIMSC APPROVAL PER NAVFAC SAT-TO CHECKLIST

SATISFACTORY TO DATE 31 DEC 2025

DES: GSS	DRW: HGH	REV: BWC

PM/DM KKK
BRANCH MANAGER SMK
CHIEF ENG/ARCH SMK
FIRE PROTECTION RO

DEPARTMENT OF THE NAVY
NAVAL FACILITIES ENGINEERING SYSTEMS COMMAND
NAVAL FACILITIES ENGINEERING SYSTEMS COMMAND – PACIFIC
JOINT REGION MARIANAS (JRM)
NAVFAC PACIFIC
ANDERSEN AIR FORCE BASE
GUAM

FY24 AJJY183012 (P-012),
PDI: NORTH AIRCRAFT PARKING RAMP

FUELING MECHANICAL LEGEND

SCALE: AS SHOWN
EPROJECTS NO.: 1665555
CONSTR CONTROL NO.

NAVFAC DRAWING NO.
17361975

SHEET 352 OF 377

MF001

REDESIGN FINAL SUBMITTAL

IF SHEET IS LESS THAN 22" X 34" REDUCED PRINT. USE GRAPHIC SCALES

FILE NAME: Z:\Clients\ANF\USNavy\Poc\133097_GuamP012NAR\Design\Mech\Sheets\P012_1665555_MF001.dwg
LAYOUT NAME: FUELING MECHANICAL LEGEND
PLOTTED: 01/15/2026 12:26pm
USER: hghrman

GENERAL NOTES:

A. THE DRAWINGS SHOW VARIOUS PIPING SYSTEMS SCHEMATICALLY AND DO NOT ATTEMPT TO SHOW EXACT DETAILS OF ALL PIPING OR ALL OFFSETS THAT MAY BE REQUIRED. VERIFY ALL DIMENSIONS, ELEVATIONS AND CONNECTIONS THAT ARE DETERMINED BY EQUIPMENT SELECTION AND ADJUST SYSTEMS TO ENSURE THAT EQUIPMENT, PIPE, ETC., CAN BE INSTALLED IN THE ALLOTTED SPACE. NO ADDED COMPENSATION MUST BE PERMITTED FOR VARIATION DUE TO EQUIPMENT SELECTION.

B. MAIN 12-INCH AND 14-INCH HYDRANT LOOP PIPING MUST BE PIGGABLE. ANY MAIN HYDRANT LOOP PIPING BENDS MUST HAVE A RADIUS THREE TIMES THE PIPE DIAMETER. ELBOWS OTHER THAN ON THE MAIN 12-INCH AND 14-INCH HYDRANT MAIN MUST BE LONG RADIUS (LATERALS, VENTS, DRAINS, ETC.,). ELBOWS LOCATED BETWEEN THE TEMPORARY PIG LAUNCHER AND THE RECEIVER, MUST HAVE A RADIUS THREE TIMES THE PIPE DIAMETER. BENDS NOT 90 DEG OR 45 DEG MUST BE SEGMENTABLE (TRIMMED) ELBOWS. ***ALL TEES WITH BRANCHES MUST HAVE GUIDE BARS.***

C. CONTRACTOR MUST PROTECT NEW AND EXISTING EQUIPMENT AND FACILITIES FROM BLASTING GRIT AND PAINT OVERSPRAY, SPLATTER, AND DRIPS DURING COATING OPERATIONS. PROVIDE NECESSARY MASKING, TARPS, SHEETING, AND OTHER COVERING TO PREVENT DAMAGE. SPECIAL ATTENTION MUST BE IMPLEMENTED TO PROTECT EQUIPMENT TAGS.

D. PIPE FLANGES MUST BE ASME B16.5, CLASS 150 UNLESS NOTED OTHERWISE.

E. PROVIDE FLUID TIGHT PLUGS, CAPS, OR CLASS 150 BLIND FLANGES AT ALL PIPE TERMINATIONS.

F. CONTRACTOR MUST PROVIDE TEMPORARY PIPE SUPPORTS AS REQUIRED TO COMPLETE ITS WORK.

G. COORDINATE CONSTRUCTION OF ALL MECHANICAL FUELING WORK WITH STRUCTURAL, CIVIL, ELECTRICAL WORK, ETC., SHOWN ON OTHER CONTRACT DOCUMENTS AND DRAWINGS.

H. COORDINATE APRON, FOUNDATION, AND SLAB PIPE SLEEVE REQUIREMENTS WITH FOUNDATION AND CIVIL CONTRACTORS.

I. IT IS THE CONTRACTOR'S RESPONSIBILITY TO FIELD-VERIFY EXISTING STRUCTURES, UTILITIES, AND SURVEY INFORMATION, AND TO TAKE NECESSARY PRECAUTIONS DURING DEMOLITION AND CONSTRUCTION. CONTRACTOR MUST VERIFY EXISTENCE AND MARK LOCATIONS OF ALL UTILITIES, INCLUDING SERVICE CONNECTIONS TO UNDERGROUND UTILITIES, PRIOR TO BEGINNING WORK. CONTRACTOR MUST CONTACT THE CONTRACTING OFFICER AND ALL ASSOCIATED UTILITY COMPANIES AND AGENCIES TO IDENTIFY THE LOCATION OF UTILITIES.

J. IT IS CRITICAL THAT STAINLESS STEEL PIPING IS PROTECTED FROM EXPOSURE TO BRACKISH WATER SUCH AS OCEAN INFLUENCED GROUND WATER. THIS IS TO PREVENT CHLORIDES IN BRACKISH WATER FROM DESTROYING THE PROTECTIVE OXIDE COATING ON STAINLESS STEEL AND CAUSING ACCELERATED CORROSION.

K. PIPE SUPPORTS FOR PIPING 2" AND SMALLER NOT SHOWN FOR ALL INSTANCES. PROVIDE SUPPORTS FOR 2" AND SMALLER PIPING AS DETAILED ON STRUCTURAL DRAWINGS AND IN ACCORDANCE WITH ASME B31.3, ANSI/MSS SP-58-2018 AND UFC 3-460-01, LATEST EDITIONS. SUPPORTS MUST BE STAINLESS STEEL AND PROVIDED WITH A TEFLON OR APPROVED DIELECTRIC BARRIER BETWEEN THE SUPPORT AND THE PIPING, UNLESS INDICATED OTHERWISE.

L. PIPING 2" AND SMALLER IS INDICATED DIAGRAMMATICALLY AND ALL REQUIRED FITTINGS AND VALVES ARE NOT INDICATED. REFER TO P&ID's FOR ADDITIONAL VALVE REQUIREMENTS.

M. EXTEND FBE COATING INTO VAULTS AND PITS TO WITHIN 2 INCHES OF BUTT WELD OF FIRST BUTT WELD FLANGE INSIDE VAULT OR PIT.

N. NEW AND EXISTING PIPE ELEVATIONS ARE BASED ON THE BEST AVAILABLE INFORMATION. CONTRACTOR MUST BE RESPONSIBLE FOR FIELD VERIFYING ELEVATIONS AND RESULTING ADJUSTMENTS REQUIRED TO COMPLETE PIPING WORK. CONTRACTOR MUST ESTABLISH TOP-OF-CONCRETE ELEVATIONS FOR PIPE SUPPORTS BASED ON PIPE SUPPORT DETAILS INDICATED IN THE CONTRACT DRAWINGS.

O. PIPING DIMENSIONS INDICATED ARE GENERALLY ROUNDED TO THE NEAREST INCH.

STATE OF TEXAS
GAURAV SINGH SEHRA
118502
LICENSED
PROFESSIONAL ENGINEER
01/15/2026
SEAL

Jacobs / BURNS & McDONNELL
JACOBS/B&M, A JOINT VENTURE
1100 NORTH GLEBE ROAD
SUITE 500
ARLINGTON, VA 22201

A/E Contract No. N62742-20-D-0002
A/E Task Order No. N6274221F0315
JCG NO. 0343806/03
A/E INFO

APPROVED
FOR COMMANDER NAVFAC DATE 02/02/2026

ACTIVITY
AFIMSC APPROVAL PER NAVFAC SAT-TO CHECKLIST

SATISFACTORY TO DATE 31 DEC 2025

DES: GSS	DRW: HGH	REV: BWC

PM/DM	KKK
BRANCH MANAGER	SMK
CHIEF ENG/ARCH	SMK
FIRE PROTECTION	RO

DEPARTMENT OF THE NAVY
NAVAL FACILITIES ENGINEERING SYSTEMS COMMAND
NAVFAC PACIFIC
NAVAL FACILITIES ENGINEERING SYSTEMS COMMAND – PACIFIC
JOINT REGION MARIANAS (JRM)
ANDERSEN AIR FORCE BASE
GUAM

FY24 AJJY183012 (P-012),
PDI: NORTH AIRCRAFT PARKING RAMP

FUELING MECHANICAL GENERAL NOTES

SCALE: AS SHOWN
EPROJECTS NO.: 1665555
CONSTR CONTROL NO.
NAVFAC DRAWING NO. 17361976
SHEET 353 OF 377

MF002

REDESIGN FINAL SUBMITTAL

IF SHEET IS LESS THAN 22" X 34"
REDUCED PRINT. USE GRAPHIC SCALES

FILE NAME: Z:\Clients\ANF\USNavy\Pac\133097_GuamP012NAR\Design\Mech\Sheets\P012_1665555_MF002.dwg
LAYOUT NAME: FUELING MECHANICAL GENERAL NOTES
PLOTTED: 01/15/2026 12:26pm
USER: hgharmon

SHEET NOTES

A. REFER TO DRAWINGS MF001 AND MF002 FOR LEGEND, ABBREVIATIONS, AND GENERAL NOTES.

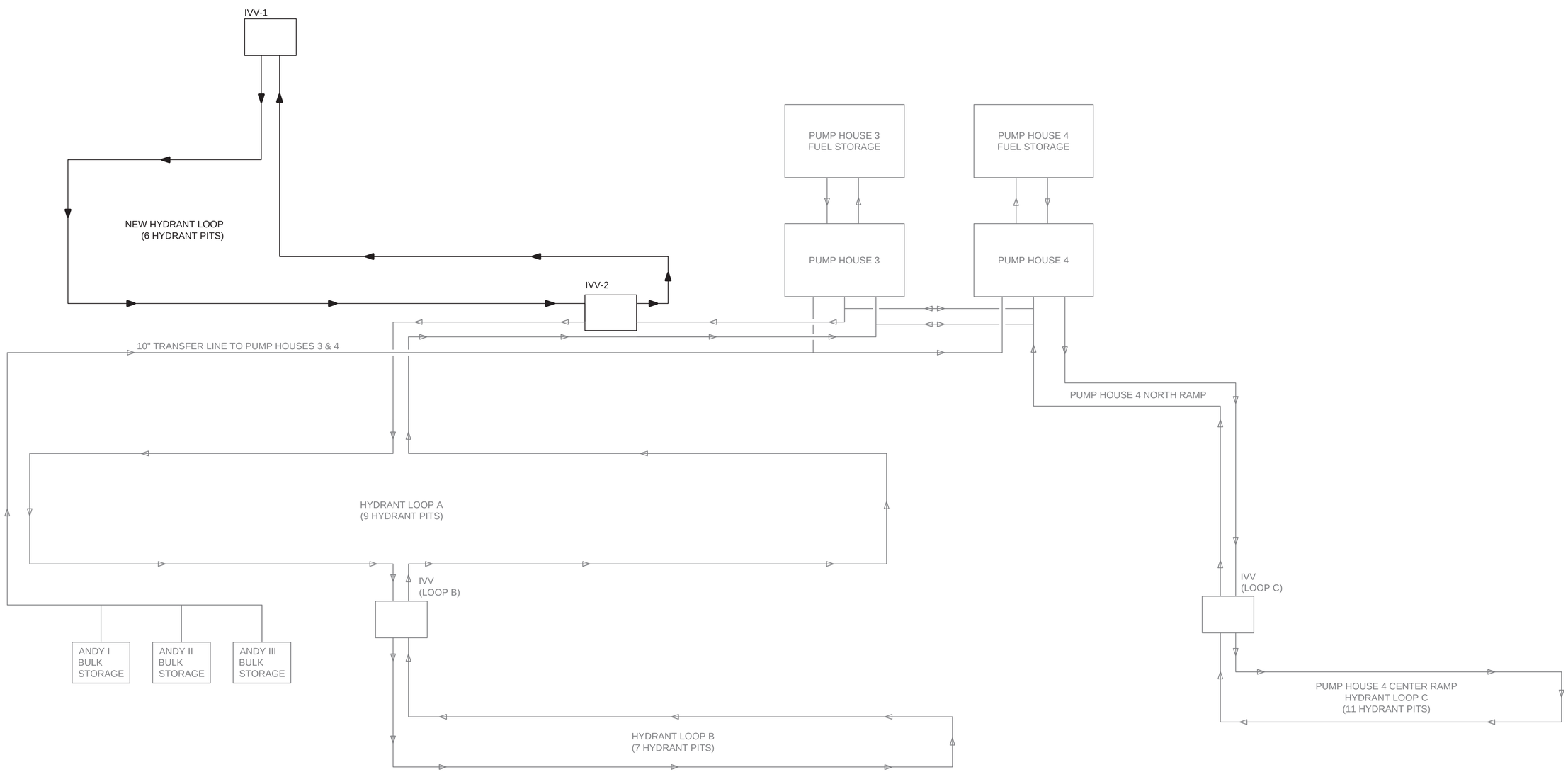

A1 FLOW DIAGRAM - OVERALL

SCALE: NTS

STATE OF TEXAS
GAURAV SINGH SEHRA
118502
LICENSED
PROFESSIONAL ENGINEER
01/15/2026
SEAL

Jacobs / BURNS McDONNELL
JACOBS/B&M, A JOINT VENTURE
1100 NORTH GLEBE ROAD
SUITE 500
ARLINGTON, VA 22201

A/E Contract No. N62742-20-D-0002
A/E Task Order No. N6274221F0315
JCG NO. 01A30603

A/E INFO

APPROVED
EVAN MOYER
FOR COMMANDER NAVFAC DATE 02/02/2026

ACTIVITY
AFIMSC APPROVAL PER NAVFAC SAT-TO CHECKLIST

SATISFACTORY TO DATE 31 DEC 2025

DES: GSS DRW: HGH REV: BWC

PM/DM KKK

BRANCH MANAGER SMK

CHIEF ENG/ARCH SMK

FIRE PROTECTION RO

DEPARTMENT OF THE NAVY
NAVAL FACILITIES ENGINEERING SYSTEMS COMMAND
NAVFAC PACIFIC
NAVAL FACILITIES ENGINEERING SYSTEMS COMMAND ~ PACIFIC
JOINT REGION MARIANAS (JRM)
ANDERSEN AIR FORCE BASE
GUAM
FY24 AJJY183012 (P-012),
PDI: NORTH AIRCRAFT PARKING RAMP
FUELING MECHANICAL FLOW DIAGRAM - OVERALL

SCALE: AS SHOWN

EPROJECTS NO.: 1665555

CONSTR CONTROL NO.

NAVFAC DRAWING NO.
17361977

SHEET 354 OF 377

MF011

REDESIGN FINAL SUBMITTAL

IF SHEET IS LESS THAN 22" X 34" REDUCED PRINT. USE GRAPHIC SCALES

FILE NAME: Z:\Clients\ANF\USNavy\Pac\133097_GuamP012NAR\Design\Mech\Sheets\P012_1665555_MF011.dwg
LAYOUT NAME: FUELING MECHANICAL FLOW DIAGRAM - OVERALL
PLOTTED: 01/15/2026 12:27pm
USER: hghannon

SHEET NOTES

A. REFER TO DRAWINGS MF001 AND MF002 FOR LEGEND, ABBREVIATIONS, AND GENERAL NOTES.
B. REFER TO OVERALL CIVIL FUELING PLAN ON DRAWING CF101.

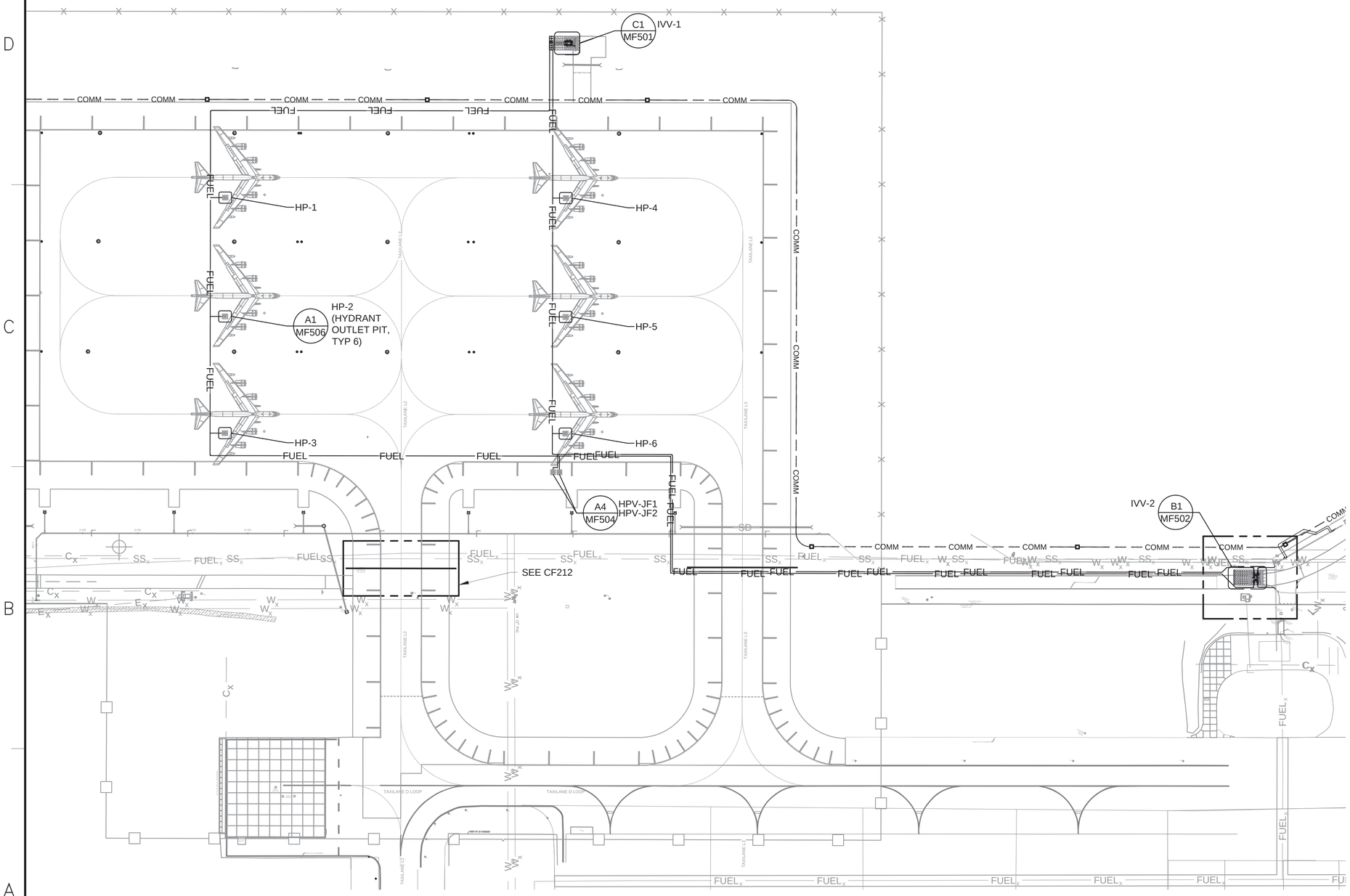

A1 FUELING MECHANICAL OVERALL SITE PLAN
SCALE: 1" = 100'

GRAPHIC SCALE
0 50' 100' 200'
SCALE: 1"=100'

NORTH ARROW
TRUE N

IF SHEET IS LESS THAN 22" X 34" REDUCED PRINT. USE GRAPHIC SCALES

NAVFAC

STATE OF TEXAS
GAURAV SINGH SEHRA
118502
LICENSED PROFESSIONAL ENGINEER
01/15/2026
SEAL

Jacobs / BURNS McDONNELL
JACOBS/B&M, A JOINT VENTURE
1100 NORTH GLEBE ROAD
SUITE 500
ARLINGTON, VA 22201

A/E Contract No. N62742-20-D-0002
A/E Task Order No. N6274221F0315
JCG NO. 2343003
A/E INFO

APPROVED
FOR COMMANDER NAVFAC DATE 02/02/2026

ACTIVITY
AFIMSC APPROVAL PER NAVFAC SAT-TO CHECKLIST

SATISFACTORY TO DATE 31 DEC 2025

DES: GSS	DRW: HGH REV: BWC
PM/DM	KKK
BRANCH MANAGER	SMK
CHIEF ENG/ARCH	SMK
FIRE PROTECTION	RO

DEPARTMENT OF THE NAVY
NAVFAC PACIFIC
NAVAL FACILITIES ENGINEERING SYSTEMS COMMAND
NAVAL FACILITIES ENGINEERING SYSTEMS COMMAND – PACIFIC
JOINT REGION MARIANAS (JRM)
ANDERSEN AIR FORCE BASE
GUAM

FY24 AJJY183012 (P-012),
PDI: NORTH AIRCRAFT PARKING RAMP

FUELING MECHANICAL OVERALL SITE PLAN

SCALE: AS SHOWN
EPROJECTS NO.: 1665555
CONSTR CONTROL NO.
NAVFAC DRAWING NO. 17361978
SHEET 355 OF 377

MF101

REDESIGN FINAL SUBMITTAL

FILE NAME: Z:\Clients\ANF\USNavy\Poc\133097_GuamP012NAR\Design\Mech\Sheets\P012-_1665555_MF101.dwg
LAYOUT NAME: FUELING MECHANICAL OVERALL SITE PLAN
PLOTTED: 01/15/2026 12:28pm
USER: hgilsrmon

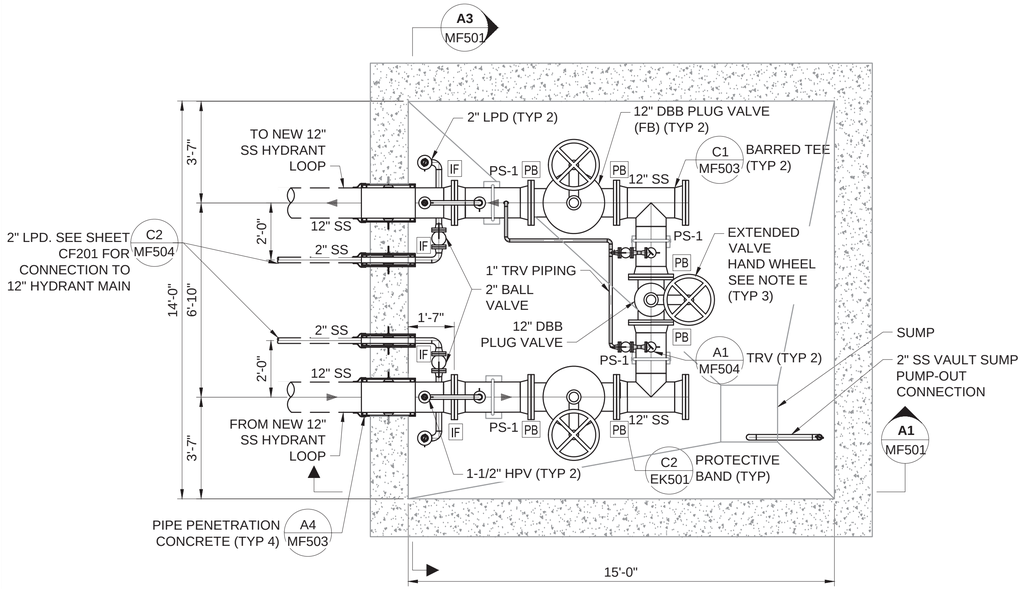

C1 IVV-1 ENLARGED PLAN
SCALE: 3/8"=1'-0"

SHEET NOTES

A. REFER TO DRAWINGS MF001 AND MF002 FOR LEGENDS, ABBREVIATIONS, AND GENERAL NOTES.

B. REFER TO CIVIL SITE PLAN ON DRAWING CF101 FOR LOCATION OF ISOLATION VALVE VAULTS.

C. ROUTE ALL HIGH POINT VENT AND LOW POINT DRAIN PIPING AND VALVES TO ABOVE VALVE VAULT GRATING TO ALLOW FOR VENTING/DRAINING WITHOUT ENTERING THE VAULT. PIPE ROUTING MUST NOT INTERFERE WITH ACCESS INTO VAULT OR OBSTRUCT ACCESS LADDERS. SUPPORT VENT/DRAIN PIPING FROM CONCRETE PIT WALL. PROVIDE EACH VENT WITH A 1-1/2" AND EACH DRAIN LINE WITH A 2" MALE CAM TYPE ADAPTER W/ FEMALE DUST CAP. LOCATE 4-1/2" FROM TOP OF VAULT WALL.

D. REFER TO DRAWING SF111 FOR STRUCTURAL DETAILS.

E. EXTEND HANDWHEEL ABOVE NEW STEEL GRATING AND A MINIMUM OF 4" BELOW TOP OF VAULT. CONTRACTOR MUST FIELD VERIFY VALVE EXTENSION LENGTHS PRIOR TO FABRICATION.

F. ALL PIPING AND VALVES, WITH THE EXCEPTION OF 12" DBB VALVES, MUST BE STAINLESS STEEL UNLESS OTHERWISE NOTED. DBB VALVES (12") MUST BE OF CARBON STEEL CONSTRUCTION WITH STAINLESS STEEL STEM AND ALL WETTED PARTS ELECTROLESS NICKEL-PLATED.

G. ALL SMALL BORE PIPING MUST BE SEAMLESS SCHEDULE 80 STAINLESS STEEL. SMALL BORE PIPING AND FITTING WELDS WITHIN THE ISOLATION VALVE VAULT, INCLUDING THE CONNECTION TO THE MAIN PIPING MUST BE MADE WITH A BUTT WELD, CAPABLE OF RADIOGRAPHIC INSPECTION. ALL SMALL BORE FLANGES MUST BE BUTT WELDED. SOCKET WELD CONNECTIONS WILL NOT BE ALLOWED IN VAULTS AND PITS.

H. SUPPORT LOW POINT DRAIN AND HIGH POINT VENT PIPING UTILIZING U-BOLTS PER STRUCTURAL DETAILS, MOUNTED TO THE UNDERSIDE OF THE PLATFORM FRAMING AND/OR VAULT WALL.

I. STEEL GRATING AND FRAMING NOT SHOWN IN PLAN VIEW FOR CLARITY.

J. REFER TO DRAWING SF551 FOR PIPE SUPPORT DETAILS.

K. PROVIDE PROTECTIVE BAND (ONLY) ON ALL SB PIPING FLANGES. REFER TO DRAWING EK501, DETAIL C2.

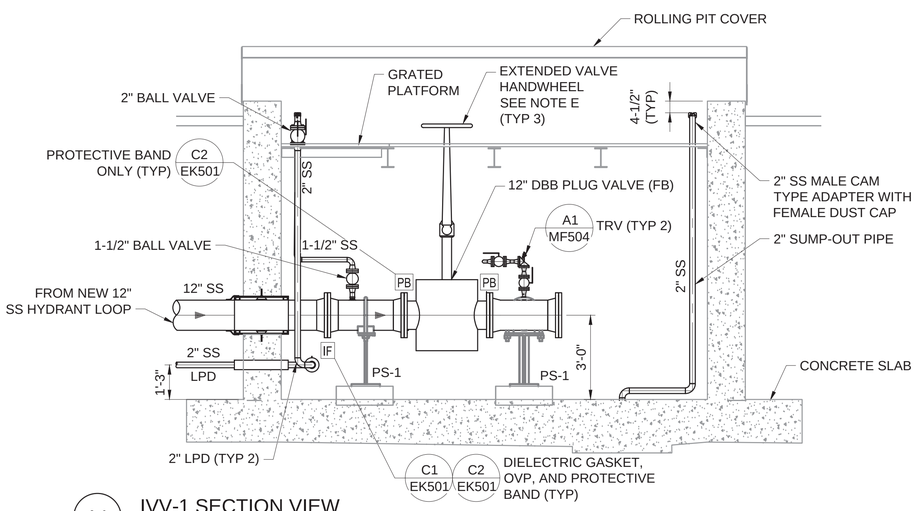

A1 IVV-1 SECTION VIEW
SCALE: 3/8"=1'-0"

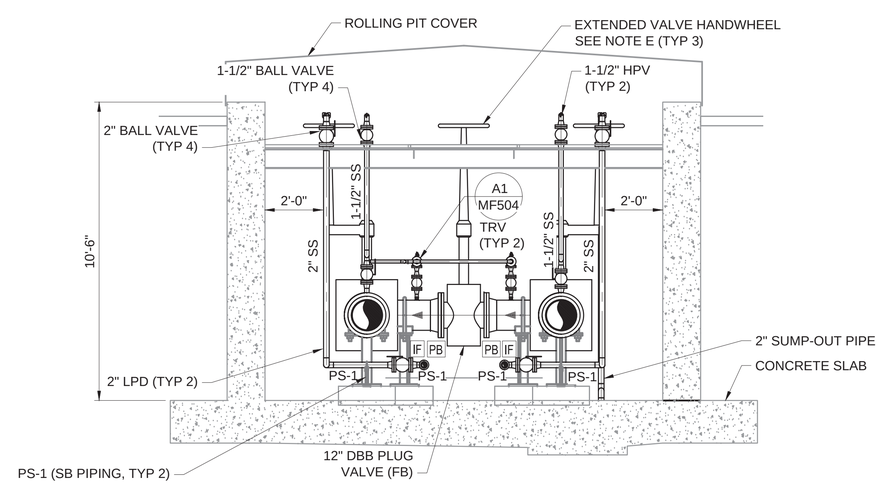

A3 IVV-1 SECTION VIEW
SCALE: 3/8"=1'-0"

GRAPHIC SCALE
0 2' 4' 8'
SCALE: 3/8" = 1'-0"

NORTH ARROW
TRUE N

NAVFAC

STATE OF TEXAS
GAURAV SINGH SEHRA
118502
LICENSED PROFESSIONAL ENGINEER
01/15/2026
SEAL

Jacobs / BURNS McDONNELL
JACOBS/B&M, A JOINT VENTURE
1100 NORTH GLEBE ROAD
SUITE 500
ARLINGTON, VA 22201
A/E Contract No. N62742-20-D-0002
A/E Task Order No. N6274221F0315
JCG NO. 0343/0603
A/E INFO

APPROVED
FOR COMMANDER NAVFAC DATE 02/02/2026

ACTIVITY
AFIMSC APPROVAL PER NAVFAC SAT-TO CHECKLIST
SATISFACTORY TO DATE 31 DEC 2025

DES: GSS	DRW: HGH	REV: BWC
PM/DM		KKK
BRANCH MANAGER		SMK
CHIEF ENG/ARCH		SMK
FIRE PROTECTION		RO

DEPARTMENT OF THE NAVY
NAVAL FACILITIES ENGINEERING SYSTEMS COMMAND
NAVFAC PACIFIC
NAVAL FACILITIES ENGINEERING SYSTEMS COMMAND – PACIFIC
JOINT REGION MARIANAS (JRM)
ANDERSEN AIR FORCE BASE
GUAM

FY24 AUY183012 (P-012),
PDI: NORTH AIRCRAFT PARKING RAMP

FUELING MECHANICAL DETAILS - ISOLATION VALVE VAULT (IVV-1)

SCALE: AS SHOWN
EPROJECTS NO.: 1665555
CONSTR CONTROL NO.
NAVFAC DRAWING NO. 17361979
SHEET 356 OF 377
MF501

REDESIGN FINAL SUBMITTAL

IF SHEET IS LESS THAN 22" X 34" REDUCED PRINT. USE GRAPHIC SCALES

FILE NAME: C:\Users\HGHarmon\appdata\local\temp\AcPublish_46644\P012_1665555_MF501.dwg
LAYOUT NAME: FUELING MECHANICAL DETAILS – ISOLATION VALVE VAULT (IVV-1)
PLOTTED: 01/15/2026 12:24pm
USER: hghormon

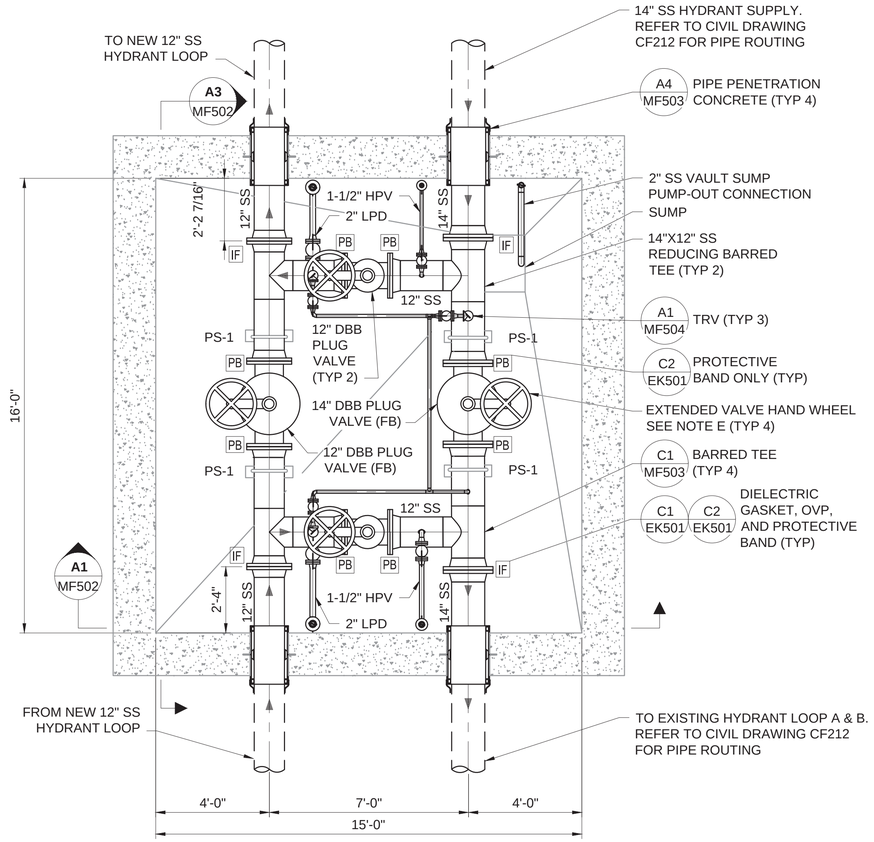

B1 IVV-2 ENLARGED PLAN

SCALE: 3/8" = 1'-0"

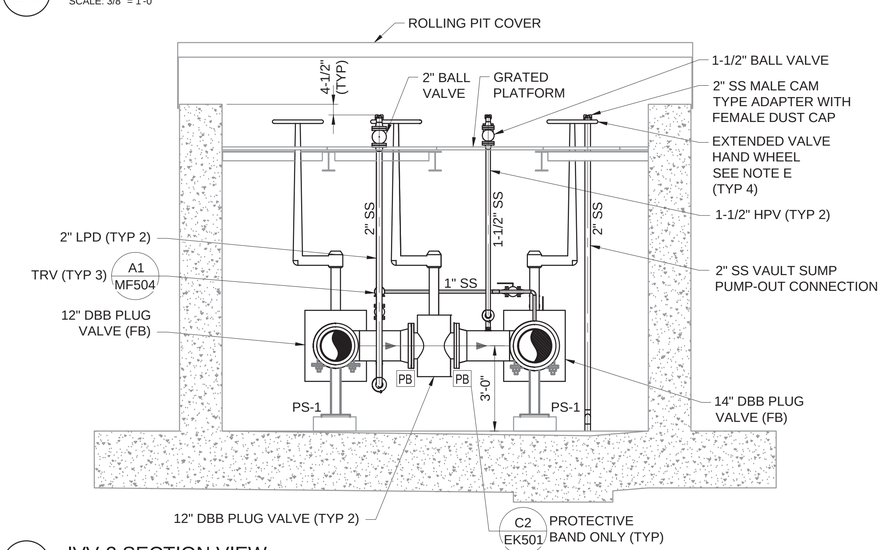

A1 IVV-2 SECTION VIEW

SCALE: 3/8" = 1'-0"

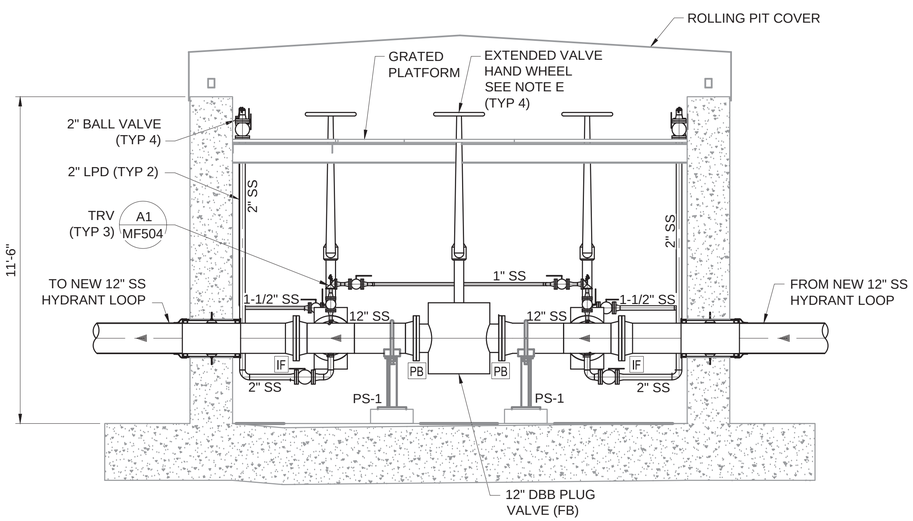

A3 IVV-2 SECTION VIEW

SCALE: 3/8" = 1'-0"

SHEET NOTES

A. REFER TO DRAWINGS MF001 AND MF002 FOR LEGENDS, ABBREVIATIONS, AND GENERAL NOTES.

B. REFER TO CIVIL SITE PLAN ON DRAWING CF101 FOR LOCATION OF ISOLATION VALVE VAULTS.

C. ROUTE ALL HIGH POINT VENT AND LOW POINT DRAIN PIPING AND VALVES TO ABOVE VALVE VAULT GRATING TO ALLOW FOR VENTING/DRAINING WITHOUT ENTERING THE VAULT. PIPE ROUTING MUST NOT INTERFERE WITH ACCESS INTO VAULT OR OBSTRUCT ACCESS LADDERS. SUPPORT VENT/DRAIN PIPING FROM CONCRETE PIT WALL. PROVIDE EACH VENT WITH A 1-1/2" AND EACH DRAIN LINE WITH A 2" MALE CAM TYPE ADAPTER W/ FEMALE DUST CAP. LOCATE 4-1/2" FROM TOP OF VAULT WALL.

D. REFER TO DRAWING SF111 FOR STRUCTURAL DETAILS.

E. EXTEND HANDWHEEL ABOVE NEW STEEL GRATING AND A MINIMUM OF 4" BELOW TOP OF VAULT. CONTRACTOR MUST FIELD VERIFY VALVE EXTENSION LENGTHS PRIOR TO FABRICATION.

F. ALL PIPING AND VALVES, WITH THE EXCEPTION OF 12" AND 14" DBB VALVES, MUST BE STAINLESS STEEL UNLESS OTHERWISE NOTED. DBB VALVES (12" AND 14") MUST BE OF CARBON STEEL CONSTRUCTION WITH STAINLESS STEEL STEM AND ALL WETTED PARTS ELECTROLESS NICKEL-PLATED.

G. ALL SMALL BORE PIPING MUST BE SEAMLESS SCHEDULE 80 STAINLESS STEEL. SMALL BORE PIPING AND FITTING WELDS WITHIN THE ISOLATION VALVE VAULT, INCLUDING THE CONNECTION TO THE MAIN PIPING MUST BE MADE WITH A BUTT WELD, CAPABLE OF RADIOGRAPHIC INSPECTION. ALL SMALL BORE FLANGES MUST BE BUTT WELDED. SOCKET WELD CONNECTIONS WILL NOT BE ALLOWED IN VAULTS AND PITS.

H. SUPPORT LOW POINT DRAIN AND HIGH POINT VENT PIPING UTILIZING U-BOLTS PER STRUCTURAL DETAILS, MOUNTED TO THE UNDERSIDE OF THE PLATFORM FRAMING AND/OR VAULT WALL.

I. STEEL GRATING AND FRAMING NOT SHOWN IN PLAN VIEW FOR CLARITY.

J. REFER TO DRAWING SF551 FOR PIPE SUPPORT DETAILS.

K. PROVIDE PROTECTIVE BAND (ONLY) ON ALL SB PIPING FLANGES. REFER TO DRAWING EK501, DETAIL C2.

GRAPHIC SCALE

0 2' 4' 8'

SCALE: 3/8" = 1'-0"

NORTH ARROW

TRUE N

NAVFAC

STATE OF TEXAS
GAURAV SINGH SEHRA
118502
LICENSED PROFESSIONAL ENGINEER
01/15/2026
SEAL

Jacobs / BURNS McDONNELL
JACOBS/B&M, A JOINT VENTURE
1100 NORTH GLEBE ROAD
SUITE 500
ARLINGTON, VA 22201

A/E Contract No. N62742-20-D-0002
A/E Task Order No. N6274221F0315
JCG NO. 0343/0603
A/E INFO

APPROVED
FOR COMMANDER NAVFAC DATE 02/02/2026

ACTIVITY
AFIMSC APPROVAL PER NAVFAC SAT-TO CHECKLIST

SATISFACTORY TO DATE 31 DEC 2025

DES: GSS	DRW: HGH	REV: BWC	
PM/DM			KKK
BRANCH MANAGER			SMK
CHIEF ENG/ARCH			SMK
FIRE PROTECTION			RO

DEPARTMENT OF THE NAVY
NAVFAC PACIFIC
NAVAL FACILITIES ENGINEERING SYSTEMS COMMAND
NAVAL FACILITIES ENGINEERING SYSTEMS COMMAND – PACIFIC
JOINT REGION MARIANAS (JRM)
ANDERSEN AIR FORCE BASE
GUAM

FY24 AJJY183012 (P-012),
PDI: NORTH AIRCRAFT PARKING RAMP

FUELING MECHANICAL DETAILS - ISOLATION VALVE VAULT (IVV-2)

SCALE: AS SHOWN
EPROJECTS NO.: 1665555
CONSTR CONTROL NO.
NAVFAC DRAWING NO. 17361980
SHEET 357 OF 377

MF502

REDESIGN FINAL SUBMITTAL

IF SHEET IS LESS THAN 22" X 34" REDUCED PRINT. USE GRAPHIC SCALES

FILE NAME: Z:\Clients\ANF\USNavy\Poc\133097_GuamP012NAR\Design\Mech\Sheets\P012_1665555_MF502.dwg
LAYOUT NAME: FUELING MECHANICAL DETAILS – ISOLATION VALVE VAULT (IVV-2)
PLOTTED: 01/15/2026 12:25pm
USER: hghermon

GUIDE BAR DIMENSION TABLE		
BRANCH SIZE	NO. OF BARS	"X"
6"	2	2"
12"	4	2-3/8"
14"	4	2-5/8"

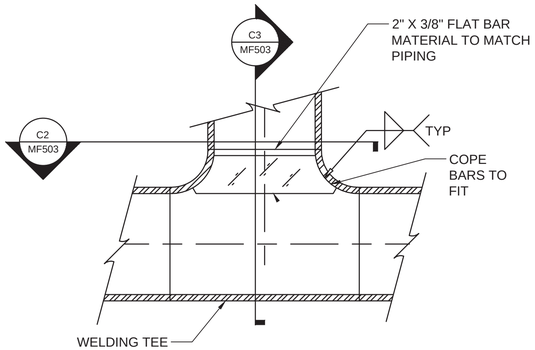

C1 BARRED TEE DETAIL
SCALE: NOT TO SCALE

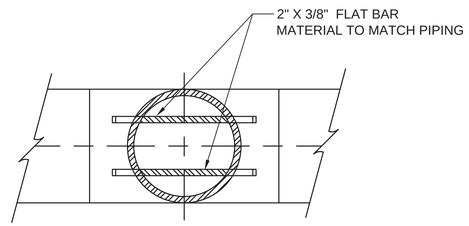

C2 BARRED TEE PLAN
SCALE: NOT TO SCALE

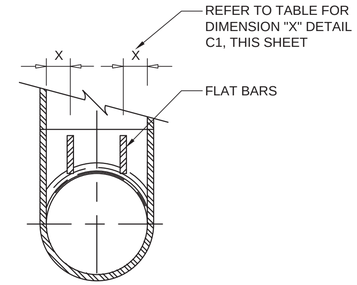

C3 BARRED TEE SECTION
SCALE: NOT TO SCALE

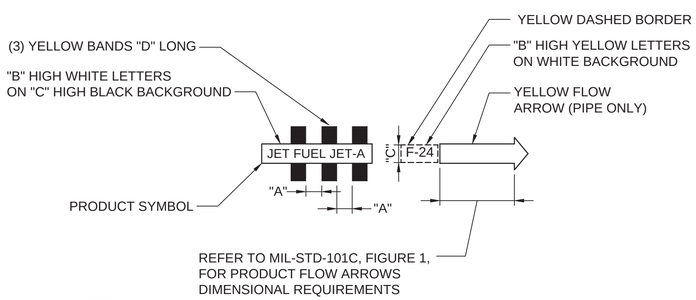

SIZE OF LETTERS AND BANDS (PIPES)				
PIPE DIAMETER (INCHES)	A WIDTH OF BANDS AND SPACING BETWEEN BANDS (INCHES)	B TITLE LETTER SIZE (INCHES)	C BACKGROUND HEIGHT (INCHES)	D BAND LENGTH (INCHES)
UNDER 1 1/2	3	1/2	1 1/2	ENCIRCLE PIPE
1 1/2 TO 3	3	3/4	2	ENCIRCLE PIPE
3 1/2 TO 6	3	1 1/4	2	ENCIRCLE PIPE
6 1/2 TO 9	3	2	3	ENCIRCLE PIPE
9 1/2 TO 13	4	3	4	ENCIRCLE PIPE
OVER 13	4	3 1/2	4 1/2	ENCIRCLE PIPE

NOTES:

1. IDENTIFY VAULT PIPING AS TO PRODUCT SERVICE BY COLOR CODING, BANDING, PRODUCT NAMES, AND NATO DESIGNATION IN ACCORDANCE WITH MIL-STD-161H.
2. COLORS INDICATED ABOVE MUST BE AS FOLLOWS:
   a. WHITE: GLOSS, COLOR NO. 17875
   b. BLACK: COLOR NO. 17038
   c. YELLOW: COLOR NO. 13655

A1 JET FUEL PRODUCT LABELING
SCALE: NOT TO SCALE

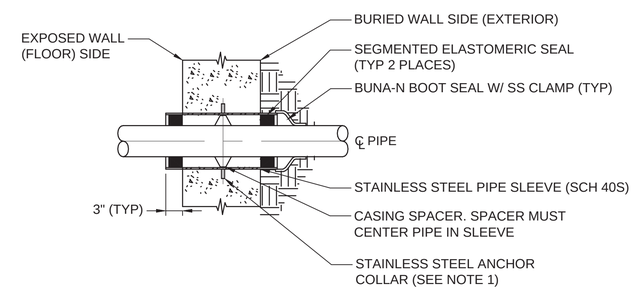

SLEEVE CLEARANCE TABLE	
NOM. PIPE DIA.	NOM. SLEEVE DIA.
2"	4"
12"	16"
14"	18"

NOTES

1. REFER TO STRUCTURAL DRAWINGS FOR SLEEVE REQUIREMENTS.

A4 PIPE PENETRATION THROUGH CONCRETE
SCALE: NOT TO SCALE

STATE OF TEXAS
GAURAV SINGH SEHRA
118502
LICENSED
PROFESSIONAL ENGINEER
01/15/2026
SEAL

Jacobs / BURNS McDONNELL
JACOBS/B&M, A JOINT VENTURE
1100 NORTH GLEBE ROAD
SUITE 500
ARLINGTON, VA 22201

A/E Contract No. N62742-20-D-0002
A/E Task Order No. N6274221F0315
JCG NO. 015430603
A/E INFO

APPROVED
FOR COMMANDER NAVFAC DATE 02/02/2026

ACTIVITY
AFIMSC APPROVAL PER NAVFAC SAT-TO CHECKLIST

SATISFACTORY TO DATE 31 DEC 2025

DES: GSS	DRW: HGH	REV: BWC

PM/DM KKK
BRANCH MANAGER SMK
CHIEF ENG/ARCH SMK
FIRE PROTECTION RO

DEPARTMENT OF THE NAVY
NAVAL FACILITIES ENGINEERING SYSTEMS COMMAND
NAVFAC PACIFIC
NAVAL FACILITIES ENGINEERING SYSTEMS COMMAND – PACIFIC
JOINT REGION MARIANAS (JRM)
ANDERSEN AIR FORCE BASE
GUAM

FY24 AUY183012 (P-012),
PDI: NORTH AIRCRAFT PARKING RAMP

FUELING MECHANICAL DETAILS - ISOLATION VALVE VAULT (IVV-2)

SCALE: AS SHOWN
EPROJECTS NO.: 1665555
CONSTR CONTROL NO.
NAVFAC DRAWING NO. 17361981
SHEET 358 OF 377
MF503

REDESIGN FINAL SUBMITTAL

IF SHEET IS LESS THAN 22" X 34" REDUCED PRINT. USE GRAPHIC SCALES

FILE NAME: Z:\Clients\ANF\USNavy\Pac\133097_GuamP012NAR\Design\Mech\Sheets\P012_1665555_MF503.dwg
LAYOUT NAME: FUELING MECHANICAL DETAILS
PLOTTED: 01/15/2026 12:25pm
USER: hghorman

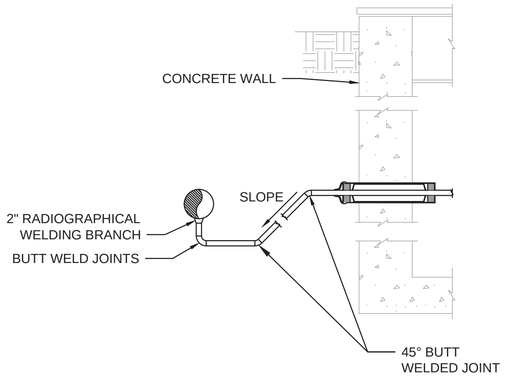

C2 LOW POINT DRAIN (LPD) ROUTED TO IVV-1

SCALE: NOT TO SCALE

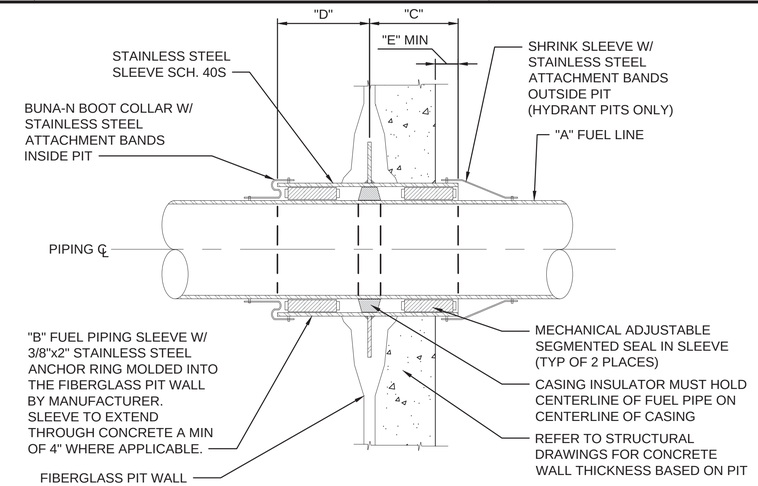

"A" FUEL PIPE DIAMETER	"B" SLEEVE PIPE DIAMETER	"C" SLEEVE LENGTH EXTERIOR	"D" SLEEVE LENGTH INTERIOR	"E" SLEEVE END DISTANCE TO CONCRETE
1 1/2"	4"	16" (MIN)	4"	0"
6"	10"	27" (MIN)	4"	3"

C4 FIBERGLASS PIT WALL PENETRATION

SCALE: NOT TO SCALE

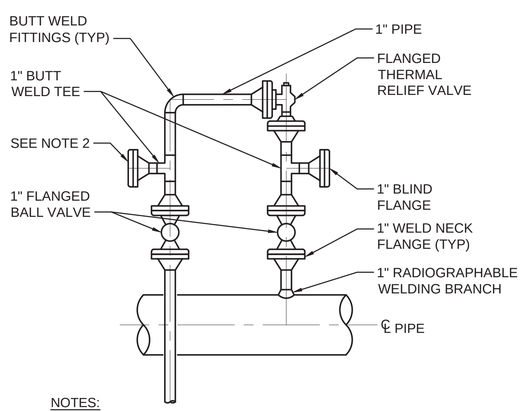

NOTES:

1. MATCH MAIN PIPING MATERIALS UNLESS NOTED OTHERWISE.
2. PROVIDE FLANGED TEE AND BLIND DOWN STREAM OF TRV ONLY WHERE SHOWN ON THE P&IDs.
3. CLASS 150 TRV ASSEMBLY TO USE CLASS 150 BALL VALVE, CLASS 150 FLANGES, BUTT WELD FITTINGS AND SCHEDULE 80 PIPE (STAINLESS STEEL).
4. INSTALL THERMAL RELIEF VALVES IN THE VERTICAL AXIS (WITH INTERNAL SPRING IN THE VERTICAL) AND THE VALVE DISCHARGE IN THE HORIZONTAL AXIS.
5. REFER TO P&ID's ON SHEETS **MF601** FOR THERMAL RELIEF FLOW DIRECTION.

A1 TRV ASSEMBLY - PIPING DETAIL

SCALE: NOT TO SCALE

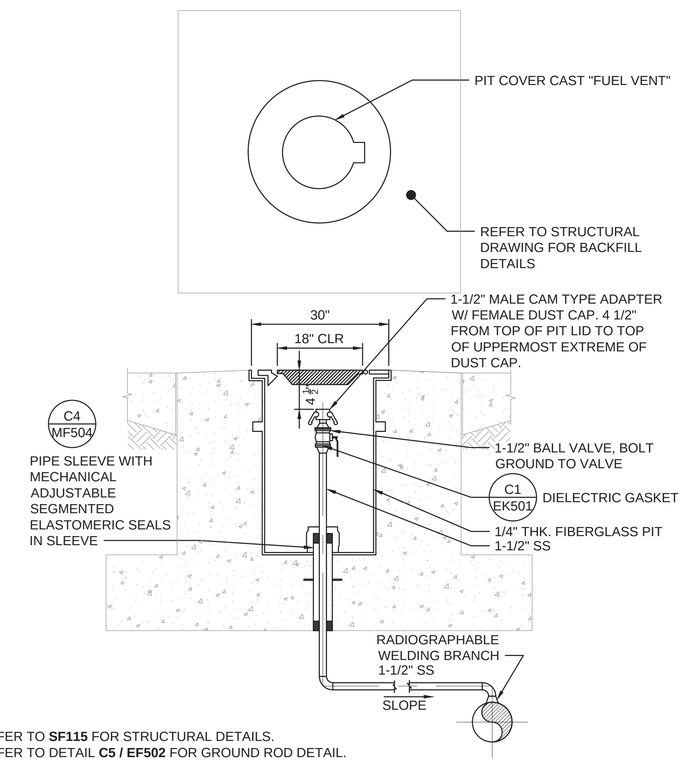

NOTES:

1. REFER TO **SF115** FOR STRUCTURAL DETAILS.
2. REFER TO DETAIL **C5 / EF502** FOR GROUND ROD DETAIL.
3. ALL SMALL BORE PIPING MUST BE SEAMLESS SCHEDULE 80 STAINLESS STEEL. SMALL BORE PIPING WELDS ASSOCIATED WITH THE HIGH POINT VENT, INCLUDING THE CONNECTION TO THE MAIN PIPING MUST BE MADE WITH A BUTT WELD, CAPABLE OF RADIOGRAPHIC INSPECTION. ALL SMALL BORE FLANGES MUST BE BUTT WELDED.

A4 HIGH POINT VENT (HPV) PIT - PAVED

SCALE: NOT TO SCALE

NAVFAC

STATE OF TEXAS
GAURAV SINGH SEHRA
118502
LICENSED PROFESSIONAL ENGINEER
01/15/2026
SEAL

Jacobs / BURNS McDONNELL
JACOBS/B&M, A JOINT VENTURE
1100 NORTH GLEBE ROAD
SUITE 500
ARLINGTON, VA 22201

A/E Contract No. N62742-20-D-0002
A/E Task Order No. N6274221F0315
JEG NO. D343003

A/E INFO

APPROVED
FOR COMMANDER NAVFAC DATE 02/02/2026

ACTIVITY
AFIMSC APPROVAL PER NAVFAC SAT-TO CHECKLIST

SATISFACTORY TO DATE 31 DEC 2025

DES: GSS DRW: HGH REV: BWC
PM/DM KKK
BRANCH MANAGER SMK
CHIEF ENG/ARCH SMK
FIRE PROTECTION RO

DEPARTMENT OF THE NAVY
NAVAL FACILITIES ENGINEERING SYSTEMS COMMAND
NAVFAC PACIFIC
NAVAL FACILITIES ENGINEERING SYSTEMS COMMAND – PACIFIC
JOINT REGION MARIANAS (JRM)
ANDERSEN AIR FORCE BASE
GUAM

FY24 AJJY183012 (P-012),
PDI: NORTH AIRCRAFT PARKING RAMP

FUELING MECHANICAL DETAILS

SCALE: AS SHOWN
EPROJECTS NO.: 1665555
CONSTR CONTROL NO.
NAVFAC DRAWING NO. 17361982
SHEET 359 OF 377

MF504

REDESIGN FINAL SUBMITTAL

FILE NAME: Z:\Clients\ANF\USNavy\Pac\133097_GuamP012NAR\Design\Mech\Sheets\P012_1665555_MF504.dwg
LAYOUT NAME: FUELING MECHANICAL DETAILS
PLOTTED: 01/15/2026 12:25pm
USER: hghermson

IF SHEET IS LESS THAN 22" X 34" REDUCED PRINT. USE GRAPHIC SCALES

NOTES:

1. THIS PHOTO DETAIL DEPICTS THE SINGLE HYDRANT HOSE TRUCK CHECKOUT POSITION AT PUMP HOUSE 3 AND 4.

C1 HYDRANT HOSE TRUCK CHECKOUT POSITION - DEMOLITION PHOTO DETAIL

SCALE: NOT TO SCALE

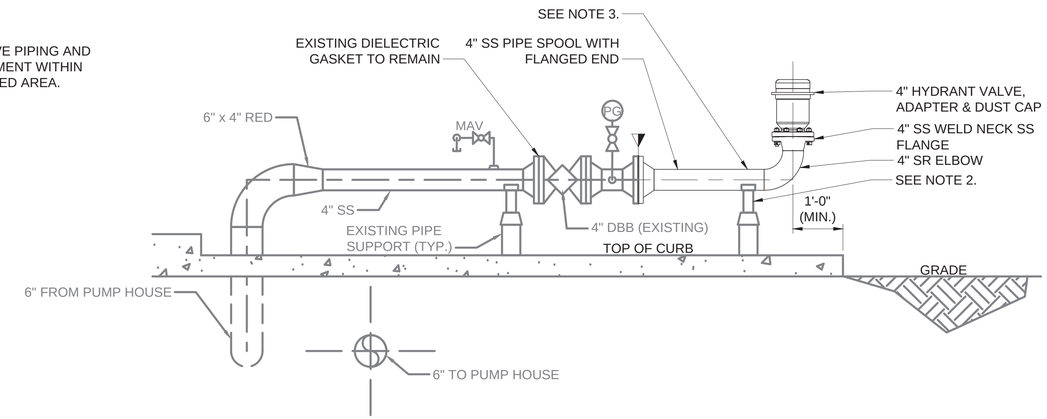

NOTES:

1. THIS DETAIL DEPICTS THE MODIFICATION OF HYDRANT HOSE TRUCK CHECKOUT POSITION AT PUMP HOUSE 3 AND 4, FOR COMMERCIAL-STYLE HYDRANT VALVE CONNECTION.
2. RE-USE EXISTING PIPE SUPPORT TO SUPPORT NEW PIPE RUN. ADJUST PIPE SUPPORT AS NEEDED TO SUPPORT NEW PIPING.
3. PROVIDE NEW HARDWARE IN ACCORDANCE WITH SPECIFICATIONS.
4. CONTRACTOR MUST FIELD VERIFY EXISTING DIMENSIONS.

C3 HYDRANT HOSE TRUCK CHECKOUT POSITION - COMMERICAL-STYLE CONNECTION DETAIL

SCALE: NOT TO SCALE

STATE OF TEXAS
GAURAV SINGH SEHRA
118502
LICENSED
PROFESSIONAL ENGINEER
01/15/2026
SEAL

Jacobs / BURNS McDONNELL
JACOBS/B&M, A JOINT VENTURE
1100 NORTH GLEBE ROAD
SUITE 500
ARLINGTON, VA 22201

A/E Contract No. N62742-20-D-0002
A/E Task Order No. N6274221F0315
JCG NO. 01A30603
A/E INFO

APPROVED
FOR COMMANDER NAVFAC DATE 02/02/2026

ACTIVITY
AFIMSC APPROVAL PER NAVFAC SAT-TO CHECKLIST

SATISFACTORY TO DATE 31 DEC 2025

DES: ###	DRW: ###	REV: ###

PM/DM	KKK
BRANCH MANAGER	SMK
CHIEF ENG/ARCH	SMK
FIRE PROTECTION	RO

DEPARTMENT OF THE NAVY
NAVAL FACILITIES ENGINEERING SYSTEMS COMMAND
NAVFAC PACIFIC
NAVAL FACILITIES ENGINEERING SYSTEMS COMMAND – PACIFIC
JOINT REGION MARIANAS (JRM)
ANDERSEN AIR FORCE BASE
GUAM

FY24 AUY183012 (P-012),
PDI: NORTH AIRCRAFT PARKING RAMP

FUELING MECHANICAL DETAILS

SCALE: AS SHOWN
EPROJECTS NO.: 1665555
CONSTR CONTROL NO.
NAVFAC DRAWING NO.
17361983
SHEET 360 OF 377

MF505

REDESIGN FINAL SUBMITTAL

IF SHEET IS LESS THAN 22" X 34"
REDUCED PRINT. USE GRAPHIC SCALES

FILE NAME: Z:\Clients\ANF\USNavy\Pac\133097_GuamP012NAR\Design\Mech\Sheets\P012_1665555_MF505.dwg
LAYOUT NAME: FUELING MECHANICAL DETAILS
PLOTTED: 01/15/2026 12:26pm
USER: hghorman

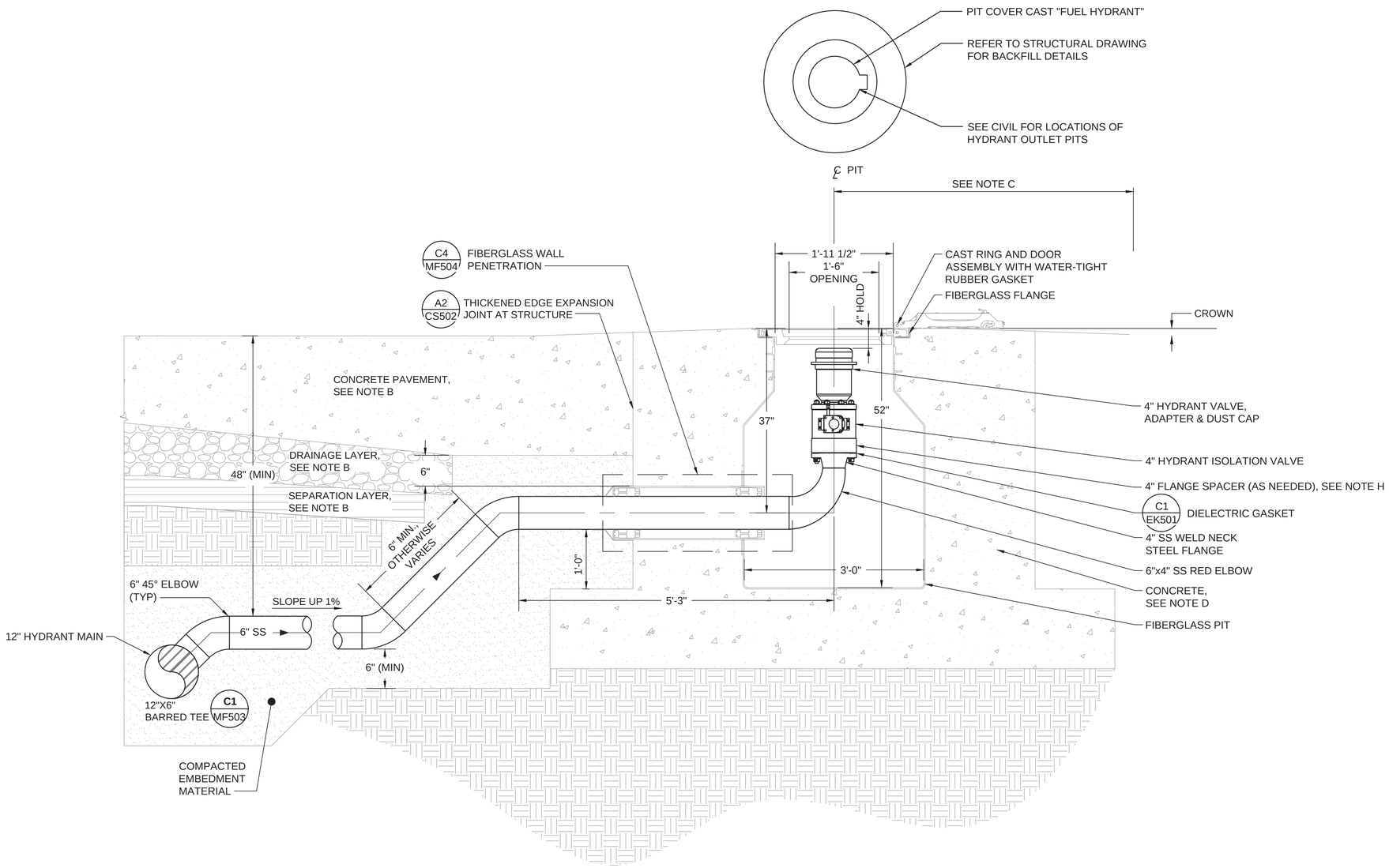

A1 HYDRANT OUTLET PIT DETAIL
SCALE: 1" = 1'-0"

SHEET NOTES

A. REFER TO DRAWINGS MF001 AND MF002 FOR LEGEND, ABBREVIATIONS, AND GENERAL NOTES.

B. REFER TO CIVIL PAVEMENT DRAWINGS FOR PAVEMENT DETAILS.

C. SEE DETAIL C3 ON DRAWING CF501 FOR HYDRANT PIT ELEVATION INFORMATION.

D. REFER TO DRAWING SF114 FOR CONCRETE STRUCTURAL DETAILS.

E. PROVIDE COMPACTED EMBEDMENT MATERIAL AROUND BURIED PIPE IN ACCORDANCE WITH A3 ON SHEET CF501. IN AREAS IN WHICH THE BASE COURSE PAVEMENT SECTIONS AND COMPACTED EMBEDMENT MATERIAL CONFLICT, PROVIDE COMPACTED EMBEDMENT MATERIAL.

F. HYDRANT PIT AND ASSOCIATED INTERNAL PIPING, VALVES, AND EQUIPMENT TO BE PROVIDED BY THE PIT MANUFACTURER AND MUST BE SHIPPED ASSEMBLED AND COATED BY THE MANUFACTURER FOR FIELD WELD TO THE LATERAL OUTSIDE OF THE HYDRANT PIT PIPE SLEEVE AT THE LOCATION INDICATED. MANUFACTURER MUST ALSO CONFIRM/INDICATE PIT DEPTH WITH COMMERCIALLY AVAILABLE ISOLATION VALVE, SPACER (IF REQUIRED), AND HYDRANT VALVE, TO CONFIRM THAT PIT DEPTH IS ADEQUATE FOR FUTURE EQUIPMENT INSTALLATION. CONTRACTOR MUST TIGHTEN ALL JOINTS DURING INSTALLATION.

G. AIRCRAFT STATIC GROUNDING ROD AND RECEPTACLE MUST BE KEPT ELECTRICALLY ISOLATED FROM ALL UNDERGROUND PIPING SYSTEMS AND FROM ALL FUEL PIPING VALVES, ETC., NO RECEPTACLES MUST BE LOCATED INSIDE ANY PIT. RESISTIVITY MUST BE 25-OHMS OR LESS. DRIVE AND BOND TOGETHER ADDITIONAL GROUND RODS UNTIL RESISTIVITY IS 25-OHMS OR LESS. STENCIL ON THE SURFACE THE INSTALLATION DATE AND RESISTANCE ACHIEVED. REFER TO DETAIL A3 / EF502 FOR STATIC GROUNDING DETAIL.

H. THE PURPOSE OF A FLANGE SPACER IS TO PROVIDE SUFFICIENT SPACE IF THE CLIENT OPTS FOR A 4" FULL PORT BALL VALVE IN LIEU OF THE 4" HYDRANT ISOLATION VALVE. A CONICAL STRAINER AT THE INLET OF THE 4" FULL PORT BALL VALVE MUST BE PROVIDED IF THIS ALTERNATIVE IS SELECTED.

GRAPHIC SCALE
0 1/2' 1' 2'
SCALE IN FEET
SCALE: 1" = 1'-0"

STATE OF TEXAS
GAURAV SINGH SEHRA
118502
LICENSED PROFESSIONAL ENGINEER
01/15/2026
SEAL

Jacobs / BURNS McDONNELL
JACOBS/B&M, A JOINT VENTURE
1100 NORTH GLEBE ROAD
SUITE 500
ARLINGTON, VA 22201
A/E Contract No. N62742-20-D-0002
A/E Task Order No. N6274221F0315
JCG NO. D343003
A/E INFO

APPROVED
FOR COMMANDER NAVFAC DATE 02/02/2026

ACTIVITY
AFIMSC APPROVAL PER NAVFAC SAT-TO CHECKLIST

SATISFACTORY TO DATE 31 DEC 2025

DES: GSS	DRW: HGH	REV: BWC	
PM/DM			KKK
BRANCH MANAGER			SMK
CHIEF ENG/ARCH			SMK
FIRE PROTECTION			RO

DEPARTMENT OF THE NAVY
NAVAL FACILITIES ENGINEERING SYSTEMS COMMAND
NAVFAC PACIFIC
NAVAL FACILITIES ENGINEERING SYSTEMS COMMAND ~ PACIFIC
JOINT REGION MARIANAS (JRM)
ANDERSEN AIR FORCE BASE
GUAM

FY24 AJJY183012 (P-012),
PDI: NORTH AIRCRAFT PARKING RAMP

FUELING MECHANICAL DETAILS

SCALE: AS SHOWN
EPROJECTS NO.: 1665555
CONSTR CONTROL NO.
NAVFAC DRAWING NO. 17361984
SHEET 361 OF 377
MF506

REDESIGN FINAL SUBMITTAL

IF SHEET IS LESS THAN 22" X 34" REDUCED PRINT. USE GRAPHIC SCALES

FILE NAME: Z:\Clients\ANF\USNavy\Pac\133097_Guam\P012NAR\Design\Mech\Sheets\P012_1665555_MF506.dwg
LAYOUT NAME: FUELING MECHANICAL DETAILS
PLOTTED: 01/15/2026 12:26pm
USER: hgharamon

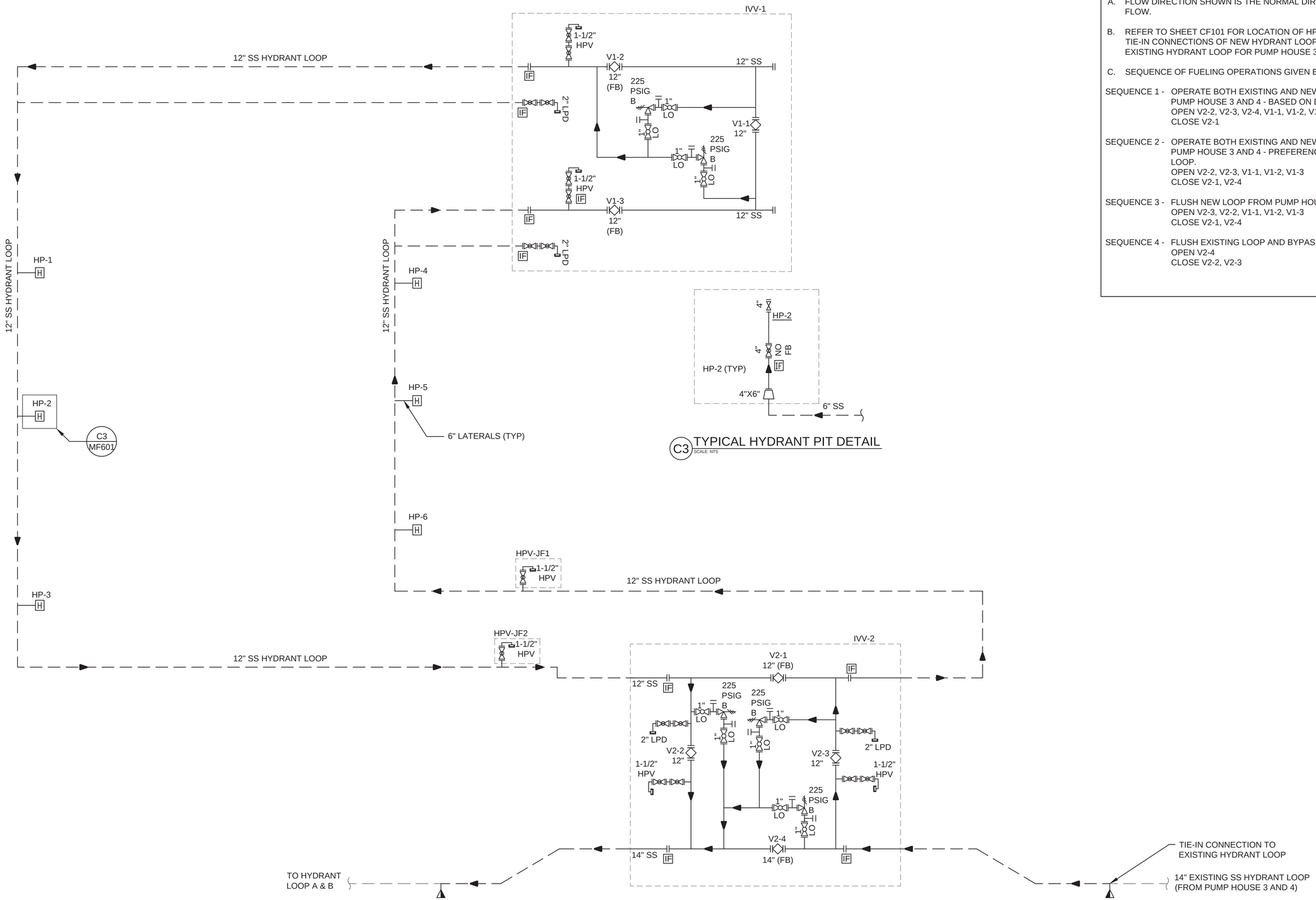

C3 TYPICAL HYDRANT PIT DETAIL
SCALE: NTS

A1 FUELING MECHANICAL P&ID
SCALE: NTS

SHEET NOTES

A. FLOW DIRECTION SHOWN IS THE NORMAL DIRECTION OF FLOW.

B. REFER TO SHEET CF101 FOR LOCATION OF HPV PITS AND TIE-IN CONNECTIONS OF NEW HYDRANT LOOP WITH EXISTING HYDRANT LOOP FOR PUMP HOUSE 3 AND 4.

C. SEQUENCE OF FUELING OPERATIONS GIVEN BELOW.

SEQUENCE 1 - OPERATE BOTH EXISTING AND NEW LOOP FROM PUMP HOUSE 3 AND 4 - BASED ON DEMAND.
OPEN V2-2, V2-3, V2-4, V1-1, V1-2, V1-3
CLOSE V2-1

SEQUENCE 2 - OPERATE BOTH EXISTING AND NEW LOOP FROM PUMP HOUSE 3 AND 4 - PREFERENCE TO NEW LOOP.
OPEN V2-2, V2-3, V1-1, V1-2, V1-3
CLOSE V2-1, V2-4

SEQUENCE 3 - FLUSH NEW LOOP FROM PUMP HOUSE 3 AND 4.
OPEN V2-3, V2-2, V1-1, V1-2, V1-3
CLOSE V2-1, V2-4

SEQUENCE 4 - FLUSH EXISTING LOOP AND BYPASS NEW LOOP.
OPEN V2-4
CLOSE V2-2, V2-3

NAVFAC

STATE OF TEXAS
GAURAV SINGH SEHRA
118502
LICENSED PROFESSIONAL ENGINEER
01/15/2026
SEAL

Jacobs / BURNS & McDONNELL
JACOBS/B&M, A JOINT VENTURE
1100 NORTH GLEBE ROAD
SUITE 500
ARLINGTON, VA 22201
A/E Contract No. N62742-20-D-0002
A/E Task Order No. N6274221F0315
JCG NO. 0343/0603
A/E INFO

APPROVED
FOR COMMANDER NAVFAC DATE 02/02/2026

ACTIVITY
AFIMSC APPROVAL PER NAVFAC SAT-TO CHECKLIST

SATISFACTORY TO DATE 31 DEC 2025

DES: GSS	DRW: HGH REV: BWC
PM/DM	KKK
BRANCH MANAGER	SMK
CHIEF ENG/ARCH	SMK
FIRE PROTECTION	RO

DEPARTMENT OF THE NAVY
NAVAL FACILITIES ENGINEERING SYSTEMS COMMAND
NAVAL FACILITIES ENGINEERING SYSTEMS COMMAND – PACIFIC
NAVFAC PACIFIC
JOINT REGION MARIANAS (JRM)
ANDERSEN AIR FORCE BASE
GUAM

FY24 AJJY183012 (P-012),
PDI: NORTH AIRCRAFT PARKING RAMP

FUELING MECHANICAL P&ID

SCALE: AS SHOWN
EPROJECTS NO.: 1665555
CONSTR CONTROL NO.
NAVFAC DRAWING NO. 17361985
SHEET 362 OF 377

MF601

REDESIGN FINAL SUBMITTAL

IF SHEET IS LESS THAN 22" X 34" REDUCED PRINT. USE GRAPHIC SCALES

FILE NAME: Z:\Clients\ANF\USNavy\Poc\133097_GuamP012NAR\Design\Mech\Sheets\P012_1665555_MF601.dwg
LAYOUT NAME: FUELING MECHANICAL P&ID
PLOTTED: 01/15/2026 12:26pm
USER: hgtsrmon

PLAN SYMBOLS

- —UE#——UE#— DUCTBANK. CIRCUITS AS INDICATED ON PLANS:
  # INDICATES DUCTBANK CONSTRUCTION TYPE.
  1 = PVC CONC. ENCASED
  2 = PVC CONC. ENCASED WITH REBAR
  3 = PVC DIRECT BURIED
  4 = RGS DIRECT BURIED
  5 = HDPE IN CASE PIPING
- —— — — COMM —— EPDS DUCTBANK (CONCRETE ENCASED)
- CONDUIT CONCEALED IN FLOOR EMBEDDED CONCRETE OR UNDERGROUND DIRECT BURIED
- CONDUIT IS EXPOSED
- LP1-3 HOMERUN TO PANEL "LP1". "3" INDICATES CIRCUIT NO.
- CONDUIT OR CIRCUIT CONTINUATION
- STUBBED AND CAPPED CONDUIT
- CONDUIT TURNED DOWN
- CONDUIT TURNED UP
- MAIN AND DOWN CONDUCTORS
- #4/0 BARE CU GROUND CONDUCTOR (BELOW GRADE)
- G #2/0 BARE CU GROUND CONDUCTOR, UON
- GROUNDING CONNECTION, EXOTHERMIC WELD
- GROUNDING CONNECTION, BOLTED
- GROUND TEST BOX
- GROUND ROD
- STATIC GROUND
- AIR TERMINAL
- GROUND REEL
- GROUND BUS BAR
- HEAT TRACE
- A POLE MOUNTED LUMINARE.
  LETTER INDICATES FIXTURE TYPE
- A STANCHION MOUNTED LUMINARE OR LUMINARE WITH NO ARM. LETTER INDICATES FIXTURE TYPE
- $#x LIGHT SWITCH, 20A, 120/277 VAC
  # = NUMBER OF POLES
  x = INDICATES CIRCUIT IDENTIFICATION
  OC = OCCUPANCY SENSOR; WP = WEATHERPROOF
- GFI WP DUPLEX CONVENIENCE RECEPTACLE, 2 POLE 3 WIRE, GROUNDING TYPE, 20A, 125V, NEMA 5-20R. MOUNT 18" AFG UNLESS OTHERWISE NOTED.
- WP TELEPHONE, MOUNTED 48" AFF TO CENTER, WEATHERPROOF WHERE INDICATED.
- EXPLOSIONPROOF CONDUIT SEAL
- EXPLOSIONPROOF CONDUIT UNION
- DISCONNECT SWITCH
- FUSED DISCONNECT SWITCH
- COMBINATION MOTOR STARTER
- E EMERGENCY POWER DOWN STATION
- F FIRE ALARM PULL STATION
- J JUNCTION BOX
- M MOTOR
- FS ### FLOW SWITCH
- HS ### HAND SWITCH
- ME ### MOISTURE ELEMENT
- TS ### TEMPERATURE SWITCH
- TT ### TEMPERATURE TRANSMITTER
- JY ### SOLENOID
- LT ### LEVEL TRANSMITTER
- LSL ### LEVEL SWITCH, LOW
- LSLL ### LEVEL SWITCH, LOW-LOW
- LSH ### LEVEL SWITCH, HIGH
- LSHH ### LEVEL SWITCH, HIGH-HIGH
- MOV ### MOTOR OPERATED VALVE
- ■ DEVICE / INSTRUMENTATION AS INDICATED ON PLANS
- ALARM HORN
- HORN/STROBE COMBINATION
- A EXIT SIGN. "A" INDICATING LIGHT FIXTURE TYPE.
- A WALL PACK. "A" INDICATING LIGHT FIXTURE TYPE.
- A OR A LIGHT FIXTURE WITH BATTERY BACKUP. "A" INDICATING LIGHT FIXTURE TYPE.
- PC PHOTOCELL
- E EQUIPMENT CONNECTION AS NOTED
- # SC-# SECURITY CAMERA:
  # = CAMERA TYPE, SEE SPECIFICATIONS.
  SC-# = CAMERA IDENTIFIER
- # SC-# = PTZ WHERE APPLICABLE

DIAGRAM SYMBOLS

- GROUND CONNECTION
- A B (A)CONTACT-NORMALLY OPEN (B)CONTACT-NORMALLY CLOSED
- H O A HAND-OFF-AUTOMATIC SELECTOR SWITCH
- CONNECTION
- OR DISCONNECT SWITCH
- DASHED LINE INDICATES WIRING REMOTE FROM DEVICE. WIRE COLOR DESIGNATION: B-BLACK, R-RED, BL-BLUE. SOLID LINE INDICATES CIRCUITRY WITHIN THE DEVICE.
- CIRCUIT BREAKER
- ENCLOSURE
- 100AT 100AF 3P LSIG # — 100AT (BREAKER TRIP RATING AS INDICATED)
  100AF (BREAKER FRAME RATING AS INDICATED)
  3P (# OF POLES AS INDICATED)
  LSIG (BREAKER TRIP TYPES, LONG TIME, SHORT TIME, INSTANTANEOUS, AND GROUND AS INDICATED)
  COMBINATION MOTOR CIRCUIT PROTECTOR WITH CONTROL POWER TRANSFORMER, STARTER CONTACTS (NEMA SIZE AS INDICATED), AND OVERLOAD.
- 15 KVA 480-208Y / 120V — TRANSFORMER, DELTA-GROUNDED WYE
  15 KVA (SIZE AS INDICATED)
  480-208Y/120V (PRIMARY VOLTAGE / SECONDARY VOLTAGE AS INDICATED)
- 15 KVA 480-240 / 120V — TRANSFORMER, SINGLE PHASE
  15 KVA (SIZE AS INDICATED)
  480-240/120V (PRIMARY VOLTAGE / SECONDARY VOLTAGE AS INDICATED)
- OR CONTROL POWER TRANSFORMER
- HEATER
- OR SOLENOID VALVE COIL
- HP MOTOR (HP SIZE AS INDICATED)
- SRx RELAY
- EXPULSION FUSE
- FUSE
- G INDICATING LIGHTS
  R=RED, G=GREEN, A=AMBER, B=BLUE
- CURRENT OVERLOAD SENSOR AND CONTACTS
- PUSHBUTTON, MOMENTARY, NORMALLY OPEN, NORMALLY CLOSED
- LEVEL SWITCH, NORMALLY OPEN
- LEVEL SWITCH, NORMALLY CLOSED
- LIMIT SWITCH, NORMALLY OPEN
- LIMIT SWITCH, NORMALLY CLOSED
- FLOW SWITCH, NORMALLY OPEN
- FLOW SWITCH, NORMALLY CLOSED
- TEMPERATURE SWITCH, NORMALLY OPEN
- TEMPERATURE SWITCH, NORMALLY CLOSED
- TIME DELAY RELAY CONTACTS, DELAY ON ENERGIZATION, NORMALLY OPEN
- TIME DELAY RELAY CONTACTS, DELAY ON ENERGIZATION, NORMALLY CLOSED
- TIME DELAY, NORMALLY OPEN, DELAY ON DEENERGIZATION
- PRESSURE SWITCH, NORMALLY OPEN
- PRESSURE SWITCH, NORMALLY CLOSED
- XOO OOX — 3 POSITION SELECTOR SWITCH:
  X REPRESENTS CLOSED AND O REPRESENTS OPEN IN VARIOUS SWITCH POSITIONS
- DRAWOUT CONNECTION
- LOAD BREAK ELBOW
- 3 — LIGHTNING ARRESTOR.
  NUMBER OF UNITS INDICATED.
- TRANSFER SWITCH AS NOTED
- TERMINAL BLOCK - TERMINATION WITHIN REMOTE ENCLOSURE

GENERAL NOTES: APPLICABLE TO ALL ELECTRICAL FUELING SHEETS

1. SYMBOL SIZE DOES NOT IMPLY EQUIPMENT SIZE, UON.
2. MOUNTING HEIGHT INDICATED IN LEGEND AND ON THE OTHER DRAWINGS MUST BE THE DISTANCE MEASURED FROM THE CENTER OF DEVICE TO THE FINISHED FLOOR OR GRADE.
3. NOT ALL SYMBOLS SHOWN ON THIS SHEET ARE USED IN THIS PROJECT.
4. JUNCTION BOXES, ENCLOSURES, WIREWAYS, PULLBOXES. MUST BE RATED NEMA 4X 316SS STAINLESS STEEL WHEN LOCATED OUTDOORS, UON.
5. COORDINATE DUCTBANKS WITH OTHER UTILITIES IN THE AREA.
6. PROVIDE AN INSULATED GREEN EQUIPMENT GROUNDING CONDUCTOR FOR CIRCUITS IN CONDUITS OR RACEWAYS.
7. ALL ELECTRICAL WORK AND MATERIAL IS NEW, AND PROVIDED BY THE CONTRACTOR UNLESS INDICATED OTHERWISE.
8. CIRCUIT CONDUCTORS MUST BE COPPER STRANDED. UL LISTED. XHHW-2. 600V INSULATED.

ABBREVIATIONS

A	AMPERES (AMP)
AC	ALTERNATING CURRENT
AF	AMPS FRAME
AFF	ABOVE FINISHED FLOOR
AFG	ABOVE FINISHED GRADE
AIC	AMPERE INTERRUPTING CAPACITY
APPROX	APPROXIMATE
AST	ABOVE GROUND STORAGE TANK
AT	AMPS TRIP
ATG	AUTOMATIC TANK GAUGING
BCGC	BARE COPPER GROUND CONDUCTOR
C	CONDUIT
CAT	CATEGORY
CCTV	CLOSE-CIRCUIT TELEVISION
CKT	CIRCUIT
COM	COMMUNICATION
CPT	CONTROL POWER TRANSFORMER
CU	COPPER
DB	DUCTBANK
DC	DIRECT CURRENT
DPDT	DOUBLE POLE DOUBLE THROW
DS	DISCONNECT SWITCH
DT	DENSITY TRANSMITTER
DWH	DEMAND WATT-HOUR
(E) OR EX	EXISTING
EFSO	EMERGENCY FUEL SHUTOFF
EGC	EQUIPMENT GROUNDING CONDUCTOR
EHH	ELECTRICAL HANDHOLE
EMH	ELECTRICAL MANHOLE
EOL	END OF LINE
EP	EXPLOSIONPROOF EQUIPMENT CLASS I, GROUP D HAZARDOUS AREA
EPDS	EMERGENCY POWER DOWN STATION
EXP	EXPLOSIONPROOF
FLA	FULL LOAD AMPS
FO	FIBER OPTIC
FT	FEET, FLOW TRANSMITTER
GFEP	GROUND FAULT EQUIPMENT PROTECTION
GFI	GROUND FAULT INTERRUPTER
GND	GROUND
GRS	GALVANIZED RIGID STEEL
HMI	HUMAN MACHINE INTERFACE
HP	HORSEPOWER
HS	HAND SWITCH
HZ	HERTZ
I/O	INPUT/OUTPUT
INCL	INCLUDING
INST	INSTRUMENT / INSTRUMENTATION
JY	SOLENOID
KVA	KILOVOLT-AMPS
KAIC	KILOAMPS INTERRUPTING CAPACITY
KW	KILOWATT
KWH	KILOWATT-HOUR
LFMC	LIQUID-TIGHT FLEXIBLE METAL CONDUIT
LLDP	LEVEL/LEAK DETECTION PANEL
LS	LEVEL SWITCH
LSH	LEVEL SWITCH, HIGH
LSHH	LEVEL SWITCH, HIGH-HIGH
LSL	LEVEL SWITCH, LOW
LSLL	LEVEL SWITCH, LOW-LOW
LT	LEVEL TRANSMITTER
LTG	LIGHTING
MCC	MOTOR CONTROL CENTER
ME	MOISTURE ELEMENT
MIN	MINIMUM
MOV	MOTOR OPERATED VALVE
MPC	MINI-POWER CENTER
MWTS	MOTOR WINDING TEMPERATURE SWITCH
NC	NORMALLY CLOSED
NEC	NATIONAL ELECTRICAL CODE
NO	NORMALLY OPEN
OIT	OPERATOR INTERFACE TERMINAL
OS	OCCUPANCY SENSOR
OWS	OIL WATER SEPARATOR
P	POLE
PB	PUSHBUTTON
PC	PHOTOCELL
PCP	PUMP CONTROL PANEL
PDC	POWER DISTRIBUTION CENTER
PDS	DIFFERENTIAL PRESSURE SWITCH
PH	PHASE OR PUMP HOUSE
PIT	PRESSURE INDICATING TRANSMITTER
PLC	PROGRAMMABLE LOGIC CONTROLLER
PNL	PANELBOARD
PT	PRESSURE TRANSMITTER
PR	PAIR
PRI	PRIMARY
PTZ	PAN-TILT-ZOOM
PVC	POLYVINYL CHLORIDE
RTD	RESISTANCE TEMPERATURE DETECTOR
RTRC	REINFORCED THERMOSETTING RESIN CONDUIT
RGS	RIGID GALVANIZED STEEL CONDUIT
SCCR	SHORT CIRCUIT CURRENT RATING
Smep	STARTER - MANUAL/EXPLOSIONPROOF
SPD	SURGE PROTECTIVE DEVICE
STP	STRIPPER PUMP
SW	SWITCH
SWBD	SWITCHBOARD
SWGR	SWITCHGEAR
SWP	STORM WATER PUMP
SYM	SYMMETRICAL
TEMP	TEMPERATURE
TLP	TANK LEVEL PANEL
TS	TEMPERATURE SWITCH
TSP	TWISTED SHIELDED PAIR
TT	TEMPERATURE TRANSMITTER
TYP	TYPICAL
UON	UNLESS OTHERWISE NOTED
UTP	UNSHIELDED TWISTED PAIR
V	VOLTS
VFD	VARIABLE FREQUENCY DRIVE
WP	WEATHERPROOF
XFMR	TRANSFORMER

NAVFAC

TIM RENSHAW LICENSED 25719 KANSAS PROFESSIONAL ENGINEER
15 JAN 2026
SEAL

Jacobs / BURNS & McDONNELL
JACOBS/B&M, A JOINT VENTURE
1100 NORTH GLEBE ROAD
SUITE 500
ARLINGTON, VA 22201

A/E Contract No. N62742-20-D-0002
A/E Task Order No. N6274221F0315
JCG NO. 01443603
A/E INFO

APPROVED
FOR COMMANDER NAVFAC DATE 02/02/2026

ACTIVITY
AFIMSC APPROVAL PER NAVFAC SAT-TO CHECKLIST

SATISFACTORY TO DATE 31 DEC 2025

DES: TSR DRW: JTL REV: DAB
PM/DM KKK
BRANCH MANAGER SMK
CHIEF ENG/ARCH SMK
FIRE PROTECTION RO

DEPARTMENT OF THE NAVY
NAVAL FACILITIES ENGINEERING SYSTEMS COMMAND
NAVFAC PACIFIC
NAVAL FACILITIES ENGINEERING SYSTEMS COMMAND – PACIFIC
JOINT REGION MARIANAS (JRM)
ANDERSEN AIR FORCE BASE
GUAM

FY24 AJJY183012 (P-012),
PDI: NORTH AIRCRAFT PARKING RAMP

ELECTRICAL FUELING LEGEND - 1

SCALE: AS SHOWN
EPROJECTS NO.: 1665555
CONSTR CONTROL NO.
NAVFAC DRAWING NO. 17361986
SHEET 363 OF 377

EF001

REDESIGN FINAL SUBMITTAL

IF SHEET IS LESS THAN 22" X 34" REDUCED PRINT. USE GRAPHIC SCALES

FILE NAME: \\bmcd\dfs\Clients\ANF\USNavy\Pac\133097_GuamP012NAR\Design\Elec\Sheets\P012_1665555_EF001.dwg
LAYOUT NAME: Layout1
PLOTTED: 01/15/2026 10:24am
USER: llewis

CONDUIT AND EQUIPMENT REQUIREMENTS FOR HAZARDOUS & NON-HAZARDOUS AREAS

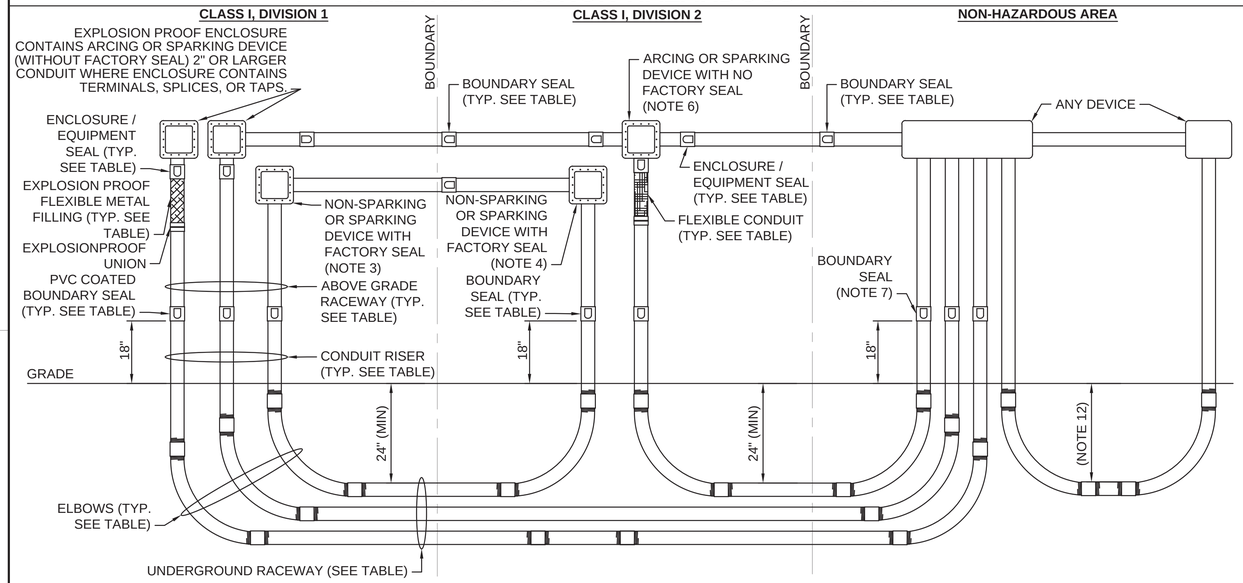

MATERIAL REQUIREMENTS (NOTE 1)				
RACEWAYS				
ABOVE GRADE RACEWAY		BELOW GRADE RACEWAY	FITTINGS	ENCLOSURES
RIGID	FLEXIBLE			
3/4" MIN. **HAZARDOUS OR NON-HAZARDOUS AREA WITHIN A NON-CONDITIONED SPACE:** - PVC COATED AND HOT-DIPPED GALVANIZED CONDUIT (DOUBLE COATING, "OCAL" OR SIMILAR) **HAZARDOUS, CONDITIONED SPACE:** - RIGID METAL CONDUIT (RMC) OR INTERMEDIATE METAL CONDUIT (IMC) **NON-HAZARDOUS, CONDITIONED SPACE:** - NOTE 2	3/4" MIN. **HAZARDOUS AREA, NON-CONDITIONED SPACE:** - CLASS I DIV 1 (C1D1): FLEXIBLE PVC PROTECTIVE COATED EXPLOSIONPROOF FLEXIBLE METAL FITTING (NOTE 10) - CLASS I DIV 2 (C1D2): LIQUID-TIGHT FLEXIBLE METAL CONDUIT (C1D2) (NOTE 8) **NON-HAZARDOUS, NON-CONDITIONED SPACE:** - LIQUID-TIGHT FLEXIBLE METAL CONDUIT **NON-HAZARDOUS, CONDITIONED SPACE:** - LIQUID-TIGHT FLEXIBLE METAL CONDUIT	1" MIN. **DIRECT-BURIED:** - PVC COATED AND HOT-DIPPED GALVANIZED CONDUIT (DOUBLE COATING, "OCAL" OR SIMILAR) **CONCRETE-ENCASED:** - PVC SCH. 40. **ELBOWS:** - PVC COATED AND HOT-DIPPED GALVANIZED CONDUIT (DOUBLE COATING, "OCAL" OR SIMILAR) **RISERS:** - PVC COATED AND HOT-DIPPED GALVANIZED CONDUIT (DOUBLE COATING, "OCAL" OR SIMILAR)	**ENCLOSURE / EQUIPMENT SEAL (NOTE 9):** - PVC COATED **BELOW GRADE TO ABOVE GRADE BOUNDARY SEAL (NOTE 7):** - PVC COATED. LOCATED WITHIN 18" OF GRADE. **ABOVE GRADE BOUNDARY SEAL (NOTE 7):** - PVC COATED. LOCATED WITHIN 10' OF BOUNDARY.	**CLASS I DIVISION 1 (C1D1):** - NON-CONDITIONED SPACE: * NEMA 4X 316/316L STAINLESS STEEL / NEMA 7 * NEMA 4X 316/316L STAINLESS STEEL (NOTE 4) - CONDITIONED SPACE: * NEMA 7 **CLASS I DIVISION 2 (C1D2):** - NON-CONDITIONED SPACE: * NEMA 4X 316/316L STAINLESS STEEL / NEMA 7 * NEMA 4X 316/316L STAINLESS STEEL (NOTE 4) - CONDITIONED SPACE: * NEMA 7 (NOTE 4) **NON-HAZARDOUS AREA:** - NON-CONDITIONED SPACE: * NEMA 4X 316/316L STAINLESS STEEL - CONDITIONED SPACE: * NEMA 1 / NEMA 12

NOTES:

1. MATERIAL REQUIREMENTS LISTED HERE MUST BE USED UNLESS OTHERWISE NOTED.
2. ELECTRICAL METALLIC TUBING (EMT) AND INTERMEDIATE METALLIC CONDUIT (IMC) ARE PERMITTED IN AREAS WHICH ARE CLASSIFIED AS NON-HAZARDOUS AND CONDITIONED SPACES. EMT MUST BE USED WHEN NOT SUBJECT TO PHYSICAL DAMAGE. IMC MUST BE USED WHERE SUBJECT TO PHYSICAL DAMAGE.
3. NEMA 7 NOT REQUIRED IF ENCLOSURE IS LISTED AS SUITABLE FOR CLASS I, DIVISION 1 LOCATIONS AND HOUSES INTRINSICALLY SAFE DEVICES OR DOES NOT CONTAIN ARCING OR SPARKING DEVICES.
4. NON-HAZARDOUS AREA ENCLOSURES MAY BE USED WHEN ENCLOSURE DOES NOT CONTAIN ARCING OR SPARKING DEVICES.
5. NO UNIONS, COUPLINGS, BOXES, OR OTHER FITTINGS EXCEPT FOR A LISTED EXPLOSION PROOF REDUCER AT THE SEAL IS PERMITTED BETWEEN SEAL AND BOUNDARY. IN CASES WHERE CONDUIT IS TRANSITIONING ABOVE GRADE FROM CLASS I, DIVISION 2 TO CLASS I, DIVISION 1 AREAS, LOCATE SEAL ON DIVISION 2 SIDE OF BOUNDARY WITHIN 10'.
6. PROVIDE SEAL WITHIN 18" OF ENCLOSURE. SEAL INSTALLED ON INSTRUMENTATION MUST BE INSTALLED BETWEEN FLEXIBLE CONDUIT AND INSTRUMENTATION.
7. BOUNDARY SEALS LOCATED ON BELOW GRADE TO ABOVE GRADE TRANSITIONS MUST BE LOCATED WITHIN 18" OF GRADE. NO UNIONS, COUPLINGS, BOXES OR OTHER FITTINGS EXCEPT FOR A LISTED EXPLOSION PROOF REDUCER AT THE SEAL IS PERMITTED BETWEEN THE SEAL AND GRADE. BOUNDARY SEALS LOCATED ABOVE GRADE THAT DO NOT TRANSITION FROM BELOW GRADE TO ABOVE GRADE MUST BE LOCATED WITHIN 10' OF THE BOUNDARY.
8. EXTERNAL BONDING JUMPER SECURED WITH CABLE TIES REQUIRED FOR LIQUID-TIGHT FLEXIBLE CONDUIT IN ACCORDANCE WITH NFPA 70, ARTICLE 501.30.
9. PROVIDE SEAL WITHIN 18" OF ENCLOSURE CONTAINING SWITCHES, CIRCUIT BREAKERS, FUSES, RELAYS, RESISTORS, ARCING OR SPARKING DEVICES, OR HIGH TEMPERATURE APPARATUS, OR CONDUIT SIZE 2" OR LARGER.
10. PROVIDE FLEXIBLE CONDUIT AND CONDUIT UNION WHEN CONNECTING TO MOTORS, TANK MOUNTED EQUIPMENT, LIGHT POLES, AND OTHER LOCATIONS INDICATED ON DRAWINGS.
11. CONDUIT ROUTED UNDER SLABS IN NON-HAZARDOUS AREAS HAVE NO MINIMUM BURIAL DEPTH. WHEN NOT UNDER SLABS 24" MINIMUM BURIAL DEPTH APPLIES.
12. PROVIDE CONDUIT NAMEPLATES AT 20' INTERVALS FOR ABOVE GRADE CONDUITS, INDOORS AND OUTDOORS, CONDUIT TRANSITIONS INTO UNDERGROUND STRUCTURES (VAULTS, PITS, MANHOLES, HANDHOLES.), AND AT ABOVE GRADE TO BELOW GRADE CONDUIT TRANSITION LOCATIONS. NAMEPLATES MUST MEET THE FOLLOWING REQUIREMENTS:
    - 304/316 GRADE STAINLESS STEEL
    - ROHS COMPLIANT
    - NON-FLAMMABLE
    - UV RESISTANT

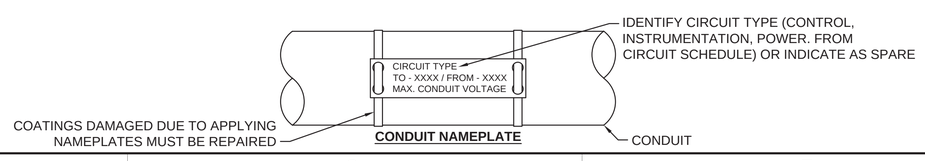

NAVFAC

TIM RENSHAW LICENSED 25719 KANSAS PROFESSIONAL ENGINEER

15 JAN 2026

SEAL

Jacobs / BURNS & McDONNELL

JACOBS/B&M, A JOINT VENTURE
1100 NORTH GLEBE ROAD
SUITE 500
ARLINGTON, VA 22201

A/E Contract No. N62742-20-D-0002
A/E Task Order No. N6274221F0315
JCG NO. D3438003

A/E INFO

APPROVED

FOR COMMANDER NAVFAC DATE 02/02/2026

ACTIVITY
AFIMSC APPROVAL PER NAVFAC SAT-TO CHECKLIST

SATISFACTORY TO DATE 31 DEC 2025

DES: TSR	DRW: JTL	REV:	DAB
PM/DM			KKK
BRANCH MANAGER			SMK
CHIEF ENG/ARCH			SMK
FIRE PROTECTION			RO

DEPARTMENT OF THE NAVY
NAVFAC PACIFIC
NAVAL FACILITIES ENGINEERING SYSTEMS COMMAND
NAVAL FACILITIES ENGINEERING SYSTEMS COMMAND – PACIFIC
JOINT REGION MARIANAS (JRM)
ANDERSEN AIR FORCE BASE
GUAM

FY24 AJJY183012 (P-012),
PDI: NORTH AIRCRAFT PARKING RAMP

ELECTRICAL FUELING LEGEND - 2

SCALE: AS SHOWN
EPROJECTS NO.: 1665555
CONSTR CONTROL NO.
NAVFAC DRAWING NO. 17361987
SHEET 364 OF 377

EF002

REDESIGN FINAL SUBMITTAL

IF SHEET IS LESS THAN 22" X 34" REDUCED PRINT. USE GRAPHIC SCALES

FILE NAME: \\bmcd\dfs\Clients\ANF\USNavy\Pac\133097_GuamP012NAR\Design\Elec\Sheets\P012_1665555_EF002.dwg
LAYOUT NAME: Layout1
PLOTTED: 01/15/2026 10:24am
USER: lewis

GENERAL NOTES

A.	SEE EF001 AND EF002 FOR LEGEND, ABBREVIATIONS AND GENERAL NOTES.

KEYED NOTES

001	SPACE WITHIN PIT/VAULT TO TOP OF PIT/VAULT IS CLASS I, DIVISION 1 HAZARDOUS AREA. SPACE WITHIN 10 FEET OF THE PIT/VAULT AND EXTENDING 18 INCHES ABOVE GRADE IS CLASS I, DIVISION 2 HAZARDOUS AREA.

LEGEND (THIS SHEET ONLY)

	CLASS 1, DIVISION 1, GROUP D
	CLASS 1, DIVISION 2, GROUP D
	NON-CLASSIFIED

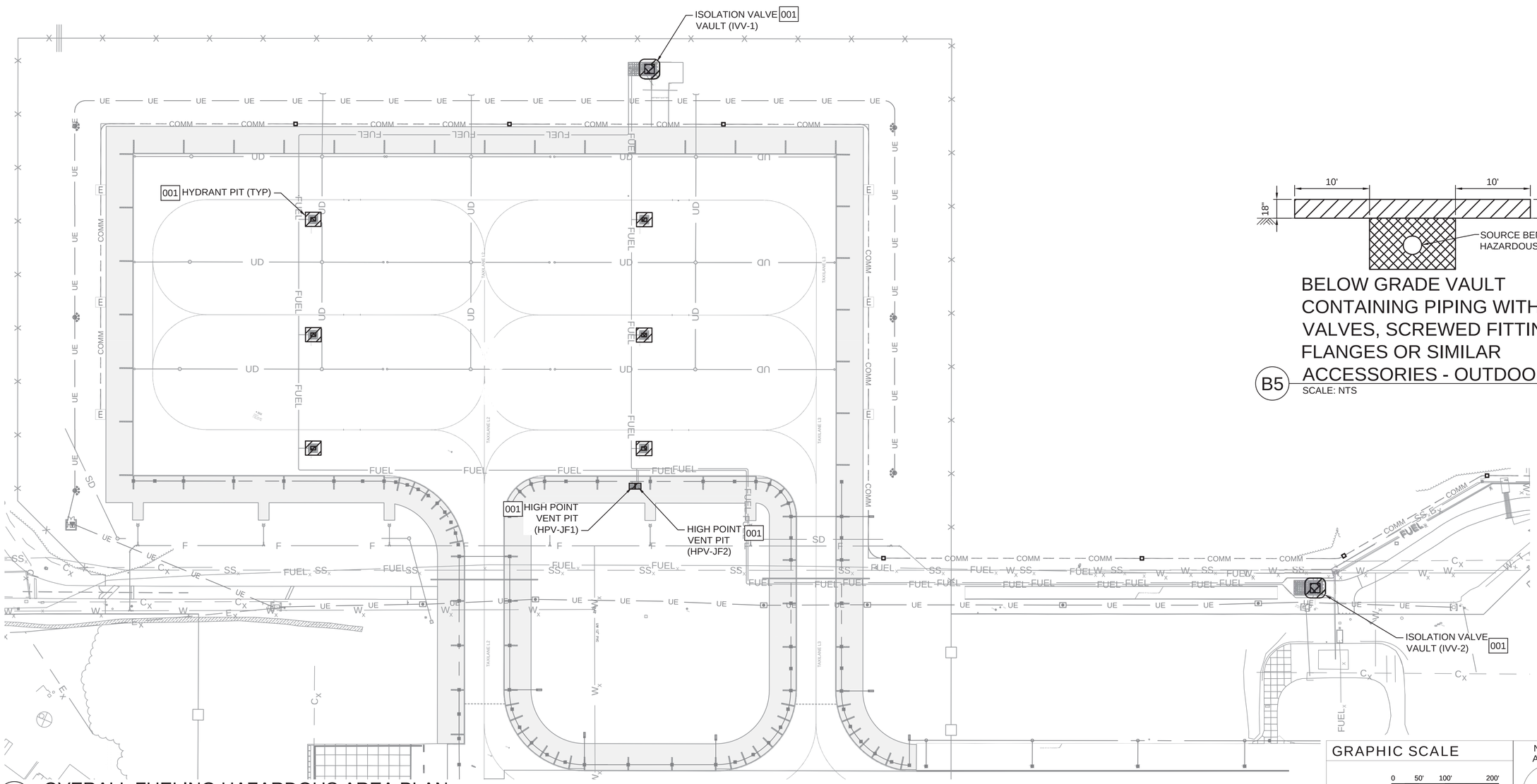

A1 OVERALL FUELING HAZARDOUS AREA PLAN
SCALE: 1" = 100'

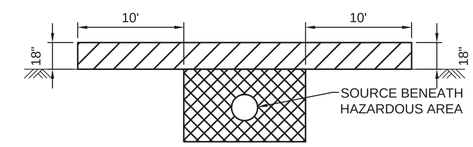

BELOW GRADE VAULT CONTAINING PIPING WITH VALVES, SCREWED FITTINGS, FLANGES OR SIMILAR ACCESSORIES - OUTDOORS

B5 SCALE: NTS

GRAPHIC SCALE

0 50' 100' 200'

SCALE: 1"=100'

NORTH ARROW

TRUE N

NAVFAC

TIM RENSHAW LICENSED 25719 KANSAS PROFESSIONAL ENGINEER

15 JAN 2026

SEAL

Jacobs / BURNS McDONNELL

JACOBS/B&M, A JOINT VENTURE
1100 NORTH GLEBE ROAD
SUITE 500
ARLINGTON, VA 22201

A/E Contract No. N62742-20-D-0002
A/E Task Order No. N6274221F0315
JCG NO. 0343800

A/E INFO

APPROVED

FOR COMMANDER NAVFAC DATE 02/02/2026

ACTIVITY
AFIMSC APPROVAL PER NAVFAC SAT-TO CHECKLIST

SATISFACTORY TO DATE 31 DEC 2025

DES:	TSR	DRW: JTL	REV: DAB
PM/DM			KKK
BRANCH MANAGER			SMK
CHIEF ENG/ARCH			SMK
FIRE PROTECTION			RO

DEPARTMENT OF THE NAVY
NAVAL FACILITIES ENGINEERING SYSTEMS COMMAND
NAVFAC PACIFIC
NAVAL FACILITIES ENGINEERING SYSTEMS COMMAND – PACIFIC
JOINT REGION MARIANAS (JRM)
ANDERSEN AIR FORCE BASE
GUAM

FY24 AJJY183012 (P-012),
PDI: NORTH AIRCRAFT PARKING RAMP

OVERALL FUELING HAZARDOUS AREA PLAN

SCALE: AS SHOWN
EPROJECTS NO.: 1665555
CONSTR CONTROL NO.
NAVFAC DRAWING NO. 17361988
SHEET 365 OF 377

EF011

REDESIGN FINAL SUBMITTAL

IF SHEET IS LESS THAN 22" X 34" REDUCED PRINT. USE GRAPHIC SCALES

FILE NAME: \\bmcd\dfs\Clients\ANF\USNavy\Pac\133097_GuamP012NAR\Design\Elec\Sheets\P012_1665555_EF011.dwg
LAYOUT NAME: Layout1
PLOTTED: 01/15/2026 10:25am
USER: Jlewis

GENERAL NOTES

A.	SEE EF001 AND EF002 FOR LEGEND, ABBREVIATIONS AND GENERAL NOTES.
B.	STATIC GROUND ROD PLACEMENTS ON APRON MUST NOT INTERFERE WITH TIE-DOWN LOCATIONS OR PAVEMENT JOINTING. COORDINATE PLACEMENT WITH AIRCRAFT TIE-DOWN AND JOINTING PLANS. STATIC GROUND ROD MUST BE AT LEAST 3 FT FROM JOINTS AND OTHER PENETRATIONS. SEE JOINTING PLANS STARTING ON CT101. SEE SITE AND PAVING PLANS STARTING ON CS101.

KEYED NOTES

002	DO NOT INSTALL HANDHOLES OR MANHOLES IN APRON. MAINTAIN A DISTANCE OF 50 FT FROM THE EDGE OF PAVING, 50 FT FROM HYDRANT LATERAL CONTROL PITS, AND 200 FT FROM A FUELING POINT FOR HANDHOLES OR MANHOLES.
009	GRADE IS CHANGING IN THIS AREA. REFER TO CIVIL DRAWINGS. EXISTING HANDHOLES MUST BE RE-USED AND BROUGHT UP TO GRADE. PULL BACK CONDUCTORS TO EHH-A. EXTEND CONDUITS TO GRADE. PULL CONDUITS BACK THROUGH EXISTING DUCTBANK. CONDUCTORS WITH INSUFFICIENT LENGTH MUST BE SPLICED ONLY WITHIN HANDHOLES. CONDUITS AND CONDUCTORS IN AFFECTED DUCTBANK: - 3 #14, 1 #14 GND , 3/4"C - 2 #12, 1 #12 GND, 3/4"C - 8 #14, 1 #14 GND, 3/4"C - 2 #8, 1 #10 GND, 1"C - 4 #14, 1 #14 GND,1"C
011	FIELD LOCATE AIRCRAFT STATIC GROUND RODS BASED ON TYPE OF AIRCRAFT BEING UTILIZED. AIRCRAFT STATIC GROUND ROD PLACEMENT SHOWN IS DIAGRAMMATIC.
012	APPROXIMATE LOCATION OF RELOCATED EHH-B. EHH-B MUST BE H20 TRAFFIC RATED. EHH-B MUST BE LOCATED OUTSIDE OF THE HAZARDOUS AREAS OF ISOLATION VALVE VAULTS (IVV).
013	SEE ELECTRICAL DRAWING SET; ES103, ES104

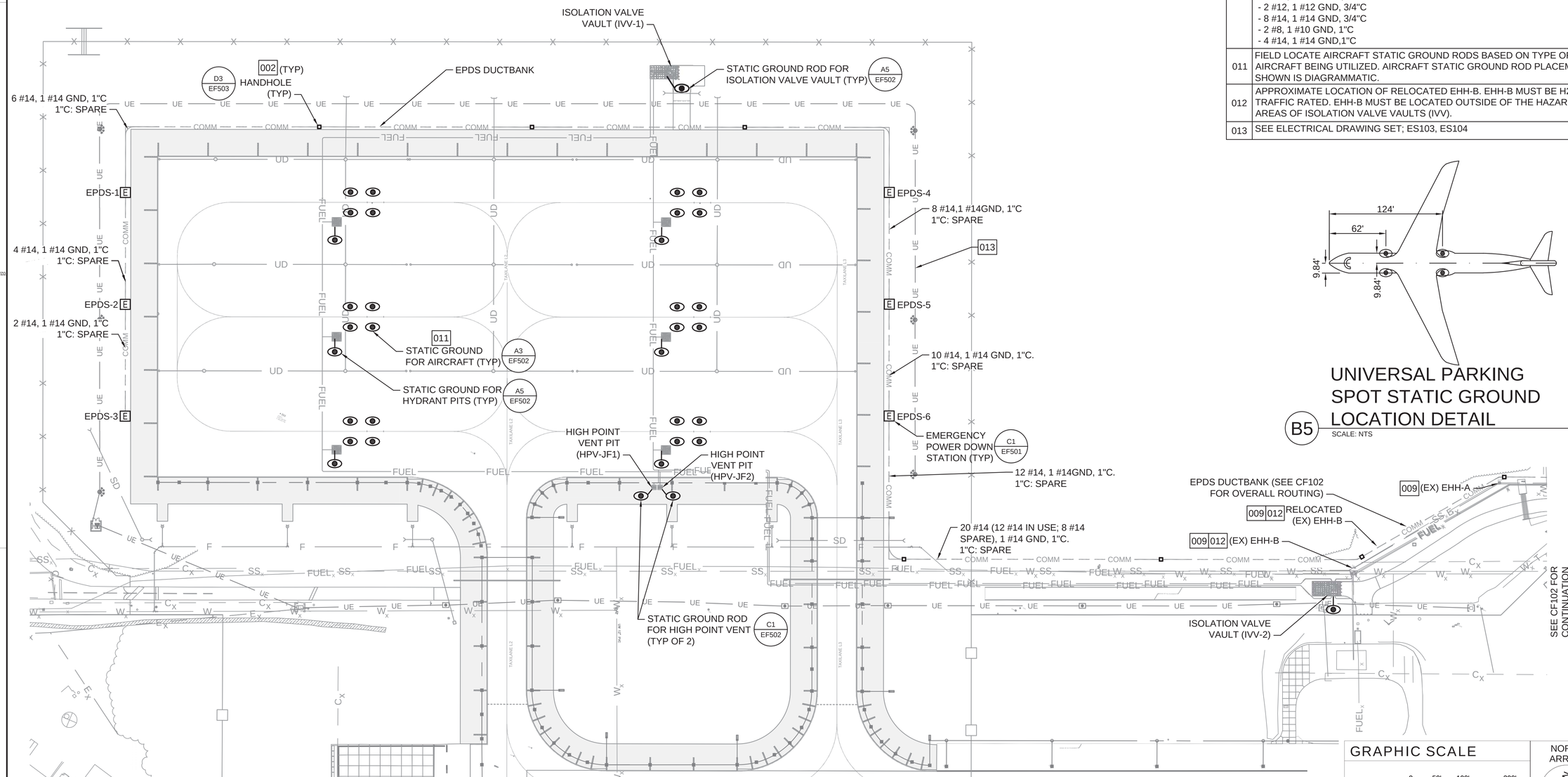

A1 OVERALL FUELING ELECTRICAL SITE PLAN
SCALE: 1" = 100'

B5 UNIVERSAL PARKING SPOT STATIC GROUND LOCATION DETAIL
SCALE: NTS

GRAPHIC SCALE
0 50' 100' 200'
SCALE: 1"=100'

NORTH ARROW
TRUE N

NAVFAC

TIM RENSHAW LICENSED 25719 KANSAS PROFESSIONAL ENGINEER
15 JAN 2026
SEAL

Jacobs / BURNS & McDONNELL
JACOBS/B&M, A JOINT VENTURE
1100 NORTH GLEBE ROAD
SUITE 500
ARLINGTON, VA 22201
A/E Contract No. N62742-20-D-0002
A/E Task Order No. N6274221F0315
JCG NO. 01A38003
A/E INFO

APPROVED
FOR COMMANDER NAVFAC DATE 02/02/2026

ACTIVITY
AFIMSC APPROVAL PER NAVFAC SAT-TO CHECKLIST

SATISFACTORY TO DATE 31 DEC 2025

DES: TSR	DRW: JTL	REV: DAB	
PM/DM			KKK
BRANCH MANAGER			SMK
CHIEF ENG/ARCH			SMK
FIRE PROTECTION			RO

DEPARTMENT OF THE NAVY
NAVFAC PACIFIC
NAVAL FACILITIES ENGINEERING SYSTEMS COMMAND
NAVAL FACILITIES ENGINEERING SYSTEMS COMMAND – PACIFIC
ANDERSEN AIR FORCE BASE
JOINT REGION MARIANAS (JRM)
GUAM

FY24 AJJY183012 (P-012),
PDI: NORTH AIRCRAFT PARKING RAMP

OVERALL FUELING ELECTRICAL SITE PLAN

SCALE: AS SHOWN
EPROJECTS NO.: 1665555
CONSTR CONTROL NO.
NAVFAC DRAWING NO. 17361989
SHEET 366 OF 377
EF101

REDESIGN FINAL SUBMITTAL

IF SHEET IS LESS THAN 22" X 34" REDUCED PRINT. USE GRAPHIC SCALES

FILE NAME: \\bmcd\dfs\Clients\ANF\USNavy\Pac\13097_Guam\P012NAR\Design\Elec\Sheets\P012_1665555_EF101.dwg
LAYOUT NAME: Layout1
PLOTTED: 01/15/2026 10:28am
USER: Tlewis

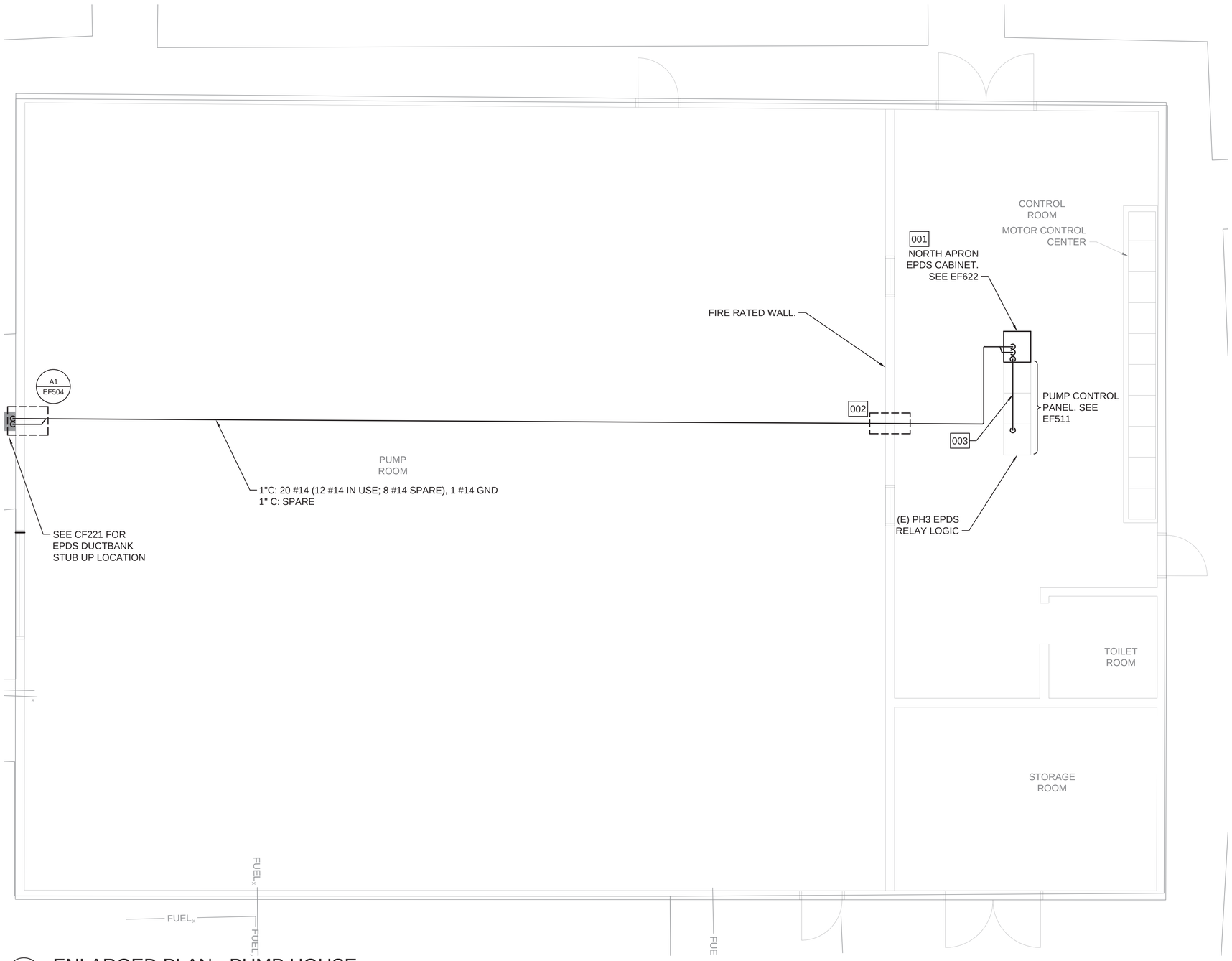

A1 ENLARGED PLAN - PUMP HOUSE

SCALE: 1/4" = 1'

GENERAL NOTES

A.	SEE EF001 AND EF002 FOR LEGEND, ABBREVIATIONS AND GENERAL NOTES.
B.	CONDUIT ROUTING SHOWN IS DIAGRAMMATIC. FIELD ADJUST CONDUIT ROUTING BASED ON COORDINATION WITH OTHER NEW AND EXISTING UTILITIES AND EQUIPMENT. NOT ALL COMPONENTS, CONDUITS, AND EQUIPMENT ARE SHOWN IN ALL VIEWS. CONDUIT ROUTING MUST NOT CREATE HAZARDS (TRIPPING) OR ACCESSIBILITY ISSUES.

KEYED NOTES

001	PROVIDE EPDS CABINET IN ACCORDANCE WITH 33 09 53
002	PROVIDE FIRESTOPPING IN ACCORDANCE WITH 07 84 00
003	1"C: CONTROL 10#14 - 2 #14, FOR EXISTING PH3 RESET PUSHBUTTON - 2 #14 "NORTH APRON EPDS ACTIVATED" TO PH3 PCP - 2 #14 "NORTH APRON EPDS CABINET POWER STATUS" - 4 #14 SPARES POWER 2 #12, 1 #12 GND FOR 120V CIRCUIT FROM PH3 PCP TO NORTH APRON EPDS CABINET

NAVFAC

TIM RENSHAW LICENSED 25719 KANSAS PROFESSIONAL ENGINEER

15 JAN 2026

SEAL

Jacobs / BURNS & McDONNELL

JACOBS/B&M, A JOINT VENTURE
1100 NORTH GLEBE ROAD
SUITE 500
ARLINGTON, VA 22201

A/E Contract No. N62742-20-D-0002
A/E Task Order No. N6274221F0315
JCG NO. 234380603

A/E INFO

APPROVED

FOR COMMANDER NAVFAC DATE 02/02/2026

ACTIVITY
AFIMSC APPROVAL PER NAVFAC SAT-TO CHECKLIST

SATISFACTORY TO DATE 31 DEC 2025

DES:	TSR	DRW: JTL	REV: DAB
PM/DM			KKK
BRANCH MANAGER			SMK
CHIEF ENG/ARCH			SMK
FIRE PROTECTION			RO

DEPARTMENT OF THE NAVY
NAVFAC PACIFIC
NAVAL FACILITIES ENGINEERING SYSTEMS COMMAND
NAVAL FACILITIES ENGINEERING SYSTEMS COMMAND – PACIFIC
JOINT REGION MARIANAS (JRM)
ANDERSEN AIR FORCE BASE
GUAM

FY24 AJJY183012 (P-012),
PDI: NORTH AIRCRAFT PARKING RAMP

ENLARGED PLAN - PUMP HOUSE

SCALE: AS SHOWN
EPROJECTS NO.: 1665555
CONSTR CONTROL NO.
NAVFAC DRAWING NO. 17361990
SHEET 367 OF 377

EF401

GRAPHIC SCALE

0 2' 4' 8'

SCALE: 1/4" = 1'-0"

NORTH ARROW

TRUE N

IF SHEET IS LESS THAN 22" X 34" REDUCED PRINT. USE GRAPHIC SCALES

REDESIGN FINAL SUBMITTAL

FILE NAME: \\bmcd\dfs\Clients\ANF\USNavy\Pac\133097_GuamP012NAR\Design\Elec\Sheets\P012_1665555_EF401.dwg
LAYOUT NAME: Layout1
PLOTTED: 01/15/2026 10:30am
USER: Ilewis

9/20/2026

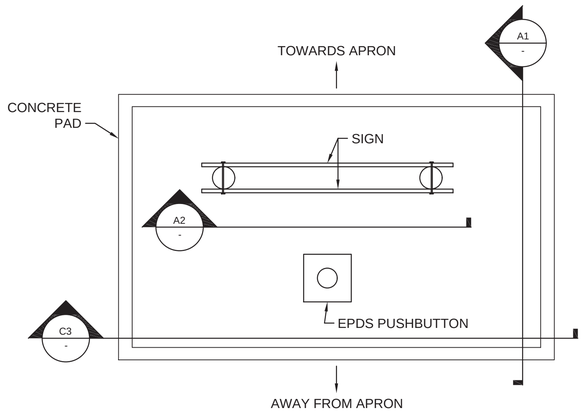

C1 EPDS STATION - PLAN VIEW

SCALE: NTS

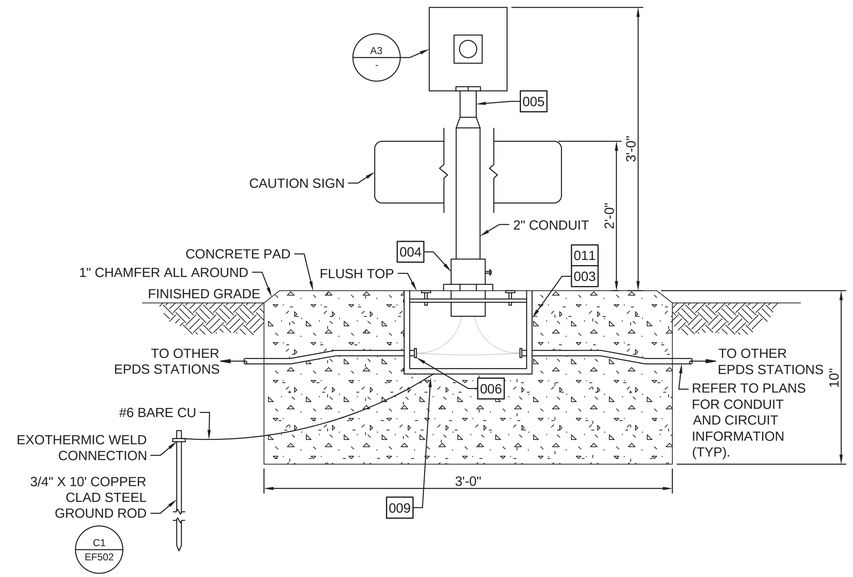

C3 EPDS ELEVATION

SCALE: NTS

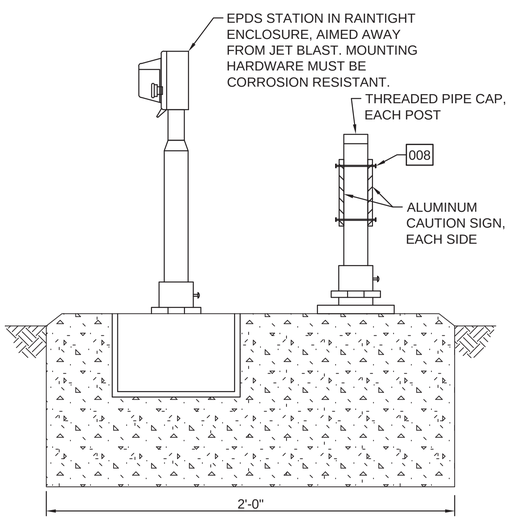

A1 ELEVATION - EPDS STATION

SCALE: NTS

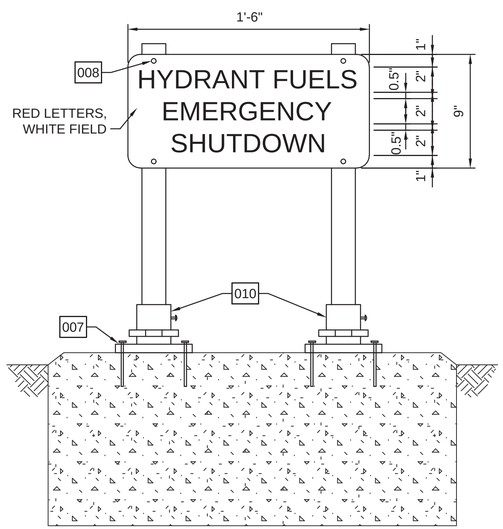

A2 ELEVATION - CAUTION SIGN

SCALE: NTS

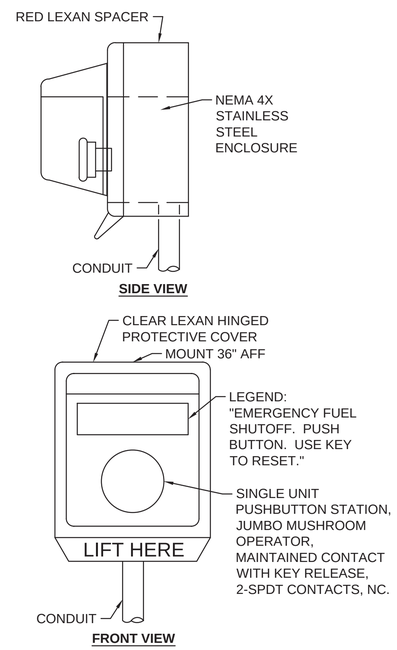

A3 EPDS DETAIL

SCALE: NTS

KEYED NOTES

003	PROVIDE 6" X 6" X 4" DEEP PULLBOX INSTALLED FLUSH INTO CONCRETE PAD. PROVIDE NEOPRENE GASKET AND STAINLESS STEEL SCREWS. DRILL AND TAP HOLES FOR CONDUIT ENTRANCES.
004	PROVIDE 2" FRANGIBLE COUPLING. THREAD INTO TOP OF PULLBOX COVER.
005	REDUCE 2" CONDUIT TO EPDS PUSHBUTTON STATION ENCLOSURE.
006	INSULATED METALLIC BUSHING. PROVIDE ON CONDUITS.
007	BASEPLATE TO RECEIVE 2" CONDUIT COUPLING. ATTACH TO CONCRETE PAD WITH (4) STAINLESS STEEL BOLTS.
008	3/8" STAINLESS STEEL BOLT WITH STAINLESS STEEL NUT AND WASHERS. (4) REQUIRED FOR EACH EPDS STATION. ADD RUBBER GROMMETS TO ISOLATE FROM STAINLESS STEEL.
009	BOND GROUND WIRE TO ENCLOSURE / CONDUIT ENTRIES.
010	PROVIDE 2" FRANGIBLE COUPLING. THREAD INTO BASEPLATE.
011	PROVIDE 24" OF CONDUCTOR SLACK WITHIN EPDS PULL BOX.

NAVFAC

TIM RENSHAW LICENSED 25719 KANSAS PROFESSIONAL ENGINEER

15 JAN 2026

SEAL

Jacobs / BURNS McDONNELL

JACOBS/B&M, A JOINT VENTURE
1100 NORTH GLEBE ROAD
SUITE 500
ARLINGTON, VA 22201

A/E Contract No. N62742-20-D-0002
A/E Task Order No. N6274221F0315
JCG NO. 234380603

A/E INFO

APPROVED

FOR COMMANDER NAVFAC DATE 02/02/2026

ACTIVITY
AFIMSC APPROVAL PER NAVFAC SAT-TO CHECKLIST

SATISFACTORY TO DATE 31 DEC 2025

DES: TSR	DRW: JTL	REV: DAB	
PM/DM			KKK
BRANCH MANAGER			SMK
CHIEF ENG/ARCH			SMK
FIRE PROTECTION			RO

DEPARTMENT OF THE NAVY
NAVFAC PACIFIC
NAVAL FACILITIES ENGINEERING SYSTEMS COMMAND
NAVAL FACILITIES ENGINEERING SYSTEMS COMMAND – PACIFIC
JOINT REGION MARIANAS (JRM)
ANDERSEN AIR FORCE BASE
GUAM

FY24 AJJY183012 (P-012),
PDI: NORTH AIRCRAFT PARKING RAMP

ELECTRICAL DETAILS - EPDS

SCALE: AS SHOWN
EPROJECTS NO.: 1665555
CONSTR CONTROL NO.

NAVFAC DRAWING NO.
17361991

SHEET 368 OF 377

EF501

REDESIGN FINAL SUBMITTAL

IF SHEET IS LESS THAN 22" X 34" REDUCED PRINT. USE GRAPHIC SCALES

FILE NAME: \\bmcd\jfs\Clients\ANF\USNavy\Pac\133097_GuamP012NAR\Design\Elec\Sheets\P012_1665555_EF501.dwg
LAYOUT NAME: Layout1
PLOTTED: 01/15/2026 10:38am
USER: Tlewis

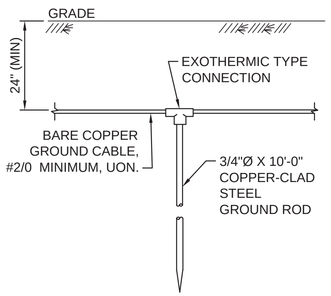

C1 GROUND ROD

SCALE: NTS

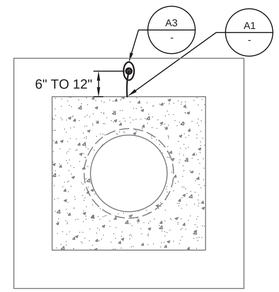

C3 HIGH/LOW POINT PIT GROUND PLACEMENT

SCALE: NTS

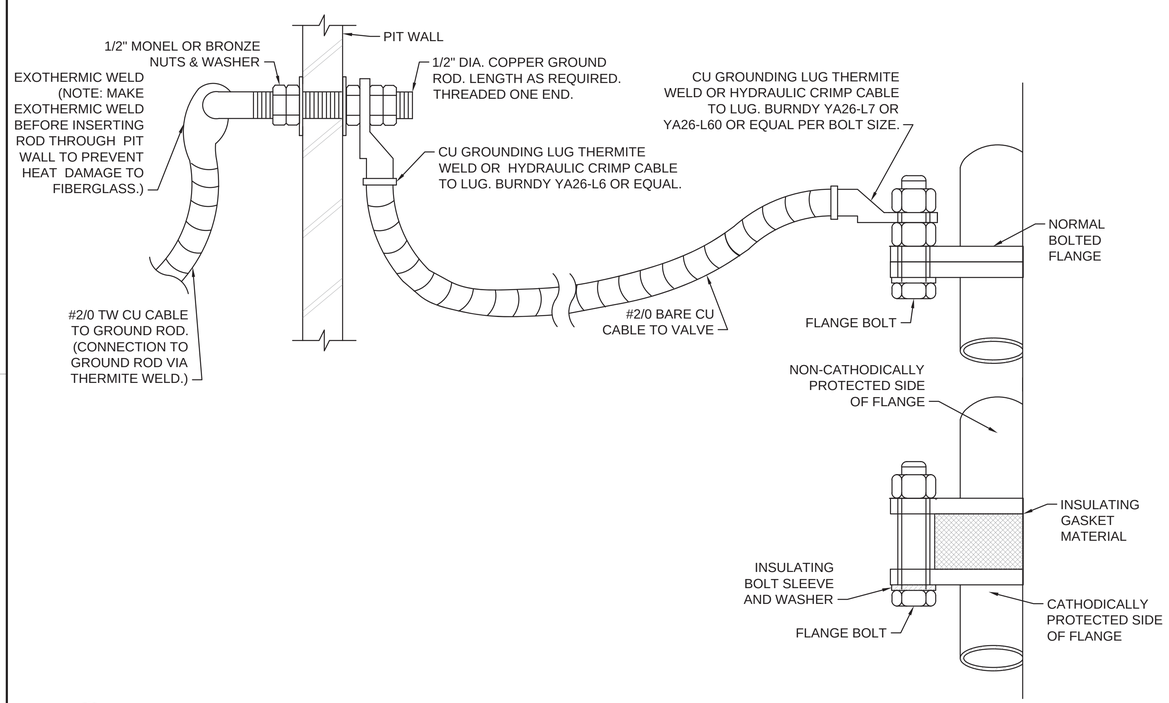

A1 PIT CABLE PENETRATION AND PIT FLANGE GROUNDING DETAIL

SCALE: NTS

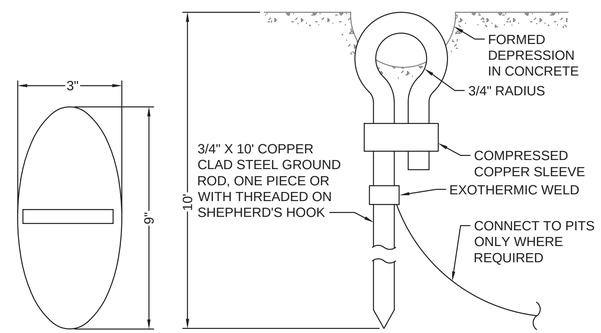

NOTES:

1. WHEN STATIC GROUND IS LOCATED IN NEW CONCRETE, IT MUST BE INSTALLED PRIOR TO CONCRETE PLACEMENT AND THE FRESH CONCRETE MUST BE FORMED AROUND THE GROUND EYE AS SHOWN.
2. WHEN THE STATIC GROUND IS LOCATED IN EXISTING CONCRETE, THE CONCRETE MUST BE BORED WITH A SIX INCH DIAMETER CORE TO FULL DEPTH, THE GROUND ROD MUST BE INSTALLED IN THE CENTER OF THE HOLE AND THEN THE HOLE MUST BE FILLED WITH GROUT THAT CONFORMS TO ASTM C 1107 GRADE A, B, OR C AND FORMED AROUND THE GROUND ROD AS SHOWN.
3. WHEN THE STATIC GROUND IS LOCATED IN A DIRT/GRASS AREA, IT MUST BE INSTALLED IN A 12"X12"X4" CONCRETE PAD.
4. STATIC GROUNDS MUST PROVIDE A RESISTANCE OF NO MORE THAN 10,000 OHMS.
5. EACH STATIC GROUND MUST HAVE IT'S RESISTANCE TESTED JUST PRIOR TO TURN OVER TO THE USER. THE TESTS MUST BE RECORDED IN A BOOKLET TO BE PROVIDED TO THE USER. THE TEST DATE, RESISTANCE, AND LOCATION MUST BE RECORDED FOR EACH STATIC GROUND.

A3 STATIC GROUND DETAIL

SCALE: NTS

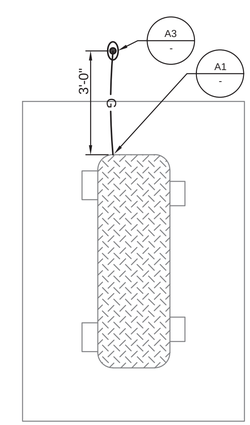

A5 HYDRANT OUTLET PIT OR ISOLATION PIT GROUND PLACEMENT (PANTOGRAPH AND HYDRANT HOSE RACK)

SCALE: NTS

NAVFAC

TIM RENSHAW LICENSED 25719 KANSAS PROFESSIONAL ENGINEER

15 JAN 2026

SEAL

Jacobs / BURNS & McDONNELL

JACOBS/B&M, A JOINT VENTURE
1100 NORTH GLEBE ROAD
SUITE 500
ARLINGTON, VA 22201

A/E Contract No. N62742-20-D-0002
A/E Task Order No. N6274221F0315
JCG NO. 23A38003

A/E INFO

APPROVED

FOR COMMANDER NAVFAC DATE 02/02/2026

ACTIVITY
AFIMSC APPROVAL PER NAVFAC SAT-TO CHECKLIST

SATISFACTORY TO DATE 31 DEC 2025

DES: TSR	DRW: JTL	REV: DAB	
PM/OM			KKK
BRANCH MANAGER			SMK
CHIEF ENG/ARCH			SMK
FIRE PROTECTION			RO

DEPARTMENT OF THE NAVY
NAVFAC PACIFIC
NAVAL FACILITIES ENGINEERING SYSTEMS COMMAND
NAVAL FACILITIES ENGINEERING SYSTEMS COMMAND – PACIFIC
JOINT REGION MARIANAS (JRM)
ANDERSEN AIR FORCE BASE
GUAM

FY24 AJJY183012 (P-012),
PDI: NORTH AIRCRAFT PARKING RAMP

ELECTRICAL DETAILS - GROUNDING

SCALE: AS SHOWN
EPROJECTS NO.: 1665555
CONSTR CONTROL NO.

NAVFAC DRAWING NO.
17361992

SHEET 369 OF 377

EF502

REDESIGN FINAL SUBMITTAL

IF SHEET IS LESS THAN 22" X 34" REDUCED PRINT. USE GRAPHIC SCALES

FILE NAME: \\bmcd\dfs\Clients\ANF\USNavy\Pac\133097_Guam\P012NAR\Design\Elec\Sheets\P012_1665555_EF502.dwg
LAYOUT NAME: Layout1
PLOTTED: 01/15/2026 10:30am
USER: llewis

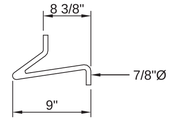

DETAIL OF PULLING-IN IRON

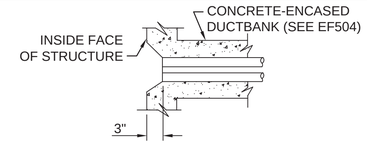

TYPICAL DUCT ENTRANCE

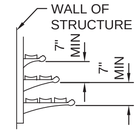

TYPICAL CABLE RACK

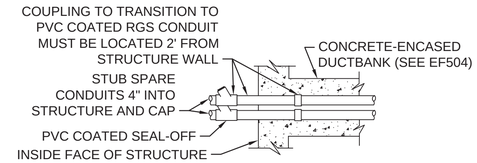

TYPICAL DUCT ENTRANCE
(FOR CONDUITS FROM HAZARDOUS AREAS)

D3 PULLING-IN IRONS, CABLE RACKS, AND DUCT ENTRANCE

SCALE: NTS

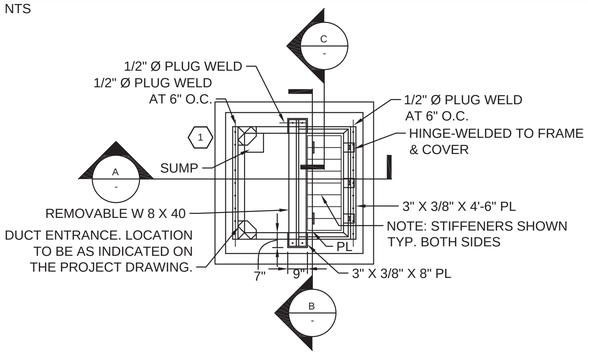

PLAN

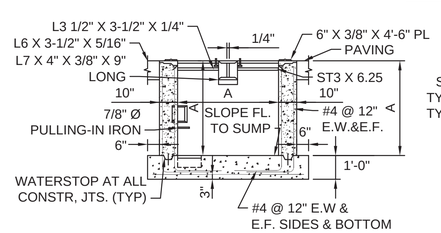

SECTION A

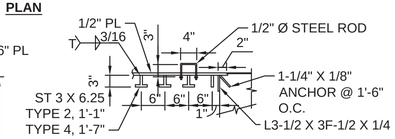

(SEE NOTE 4)

SECTION C

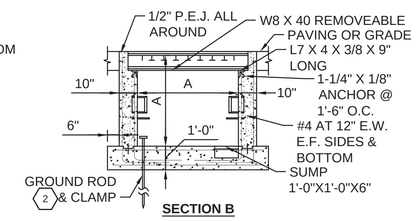

SECTION B

HANDHOLE TYPE	DIMENSIONS A
4	4'-0"

NOTES:

1. ENTRANCE OF DUCTS INTO HANDHOLE MAY BE MADE ON SIDE FACES OR CORNERS AS REQUIRED.
2. FOR DETAILS OF CABLE RACKS, DUCT ENTRANCE, AND PULLING-IN IRONS, SEE DETAIL D3, THIS SHEET.
3. HANDHOLE AND COVER MUST BE H20 TRAFFIC RATED.
4. COVER MUST BE MADE OF STRUCTURAL STEEL CONFORMING TO ASTM A 36/A 36M.
5. MINIMUM COMPRESSIVE STRENGTH OF CONCRETE MUST BE 4000 PSI.

KEYED NOTES:

1. PROVIDE DAMP-PROOFING AROUND THE EXTERIOR OF THE HANDHOLE AS SPECIFIED IN SECTION 07 11 13.
2. BOND INCOMING GROUND/DUCTBANK COUNTERPOISE SYSTEMS TO HANDHOLE GROUND RODS.

A3 ELECTRICAL HANDHOLE (TRAFFIC RATED)

SCALE: NTS

NAVFAC

T.M. RENSHAW LICENSED 25719 KANSAS PROFESSIONAL ENGINEER

15 JAN 2026
SEAL

Jacobs / BURNS & McDONNELL
JACOBS/B&M, A JOINT VENTURE
1100 NORTH GLEBE ROAD
SUITE 500
ARLINGTON, VA 22201

A/E Contract No. N62742-20-D-0002
A/E Task Order No. N6274221F0315
JCG NO. 224326003
A/E INFO

APPROVED
FOR COMMANDER NAVFAC DATE 02/02/2026

ACTIVITY
AFIMSC APPROVAL PER NAVFAC SAT-TO CHECKLIST

SATISFACTORY TO DATE 31 DEC 2025

DES: TSR DRW: JTL REV: DAB
PM/DM KKK
BRANCH MANAGER SMK
CHIEF ENG/ARCH SMK
FIRE PROTECTION RO

DEPARTMENT OF THE NAVY
NAVFAC PACIFIC
NAVAL FACILITIES ENGINEERING SYSTEMS COMMAND
NAVAL FACILITIES ENGINEERING SYSTEMS COMMAND – PACIFIC
JOINT REGION MARIANAS (JRM)
ANDERSEN AIR FORCE BASE
GUAM
FY24 AJJY183012 (P-012).
PDI: NORTH AIRCRAFT PARKING RAMP
ELECTRICAL SITE DETAILS - HANDHOLES

SCALE: AS SHOWN
EPROJECTS NO.: 1665555
CONSTR CONTROL NO.
NAVFAC DRAWING NO. 17361993
SHEET 370 OF 377

EF503

REDESIGN FINAL SUBMITTAL

IF SHEET IS LESS THAN 22" X 34"
REDUCED PRINT. USE GRAPHIC SCALES

FILE NAME: \\bmcd\dfs\Clients\ANF\USNavy\Pac\133097_GuamP012NAR\Design\Elec\Sheets\P012_1665555_EF503.dwg
LAYOUT NAME: Layout1
PLOTTED: 01/15/2026 10:31am
USER: llewis

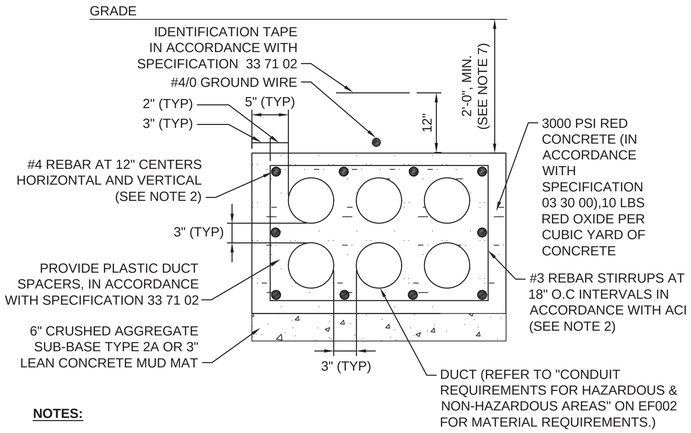

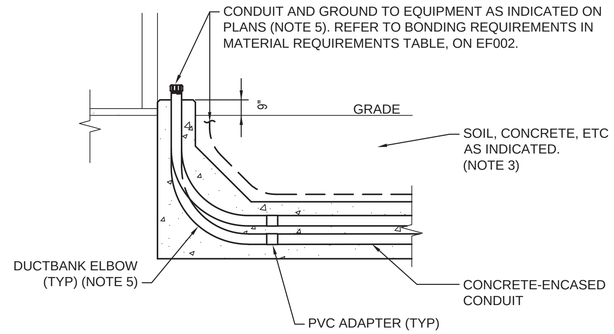

NOTES:

1. PROVIDE SIZE AND NUMBER OF CONDUITS AS INDICATED ON PLAN VIEWS OR ON THE DUCTBANK SECTIONS. MAINTAIN 5 INCHES OF CONCRETE AROUND THE OUTSIDE CONDUITS AND 3 INCHES BETWEEN CONDUITS.
2. REBAR AND TIE REINFORCEMENT REQUIRED UNDER ROADWAYS AND PAVED ROADS. EXTEND REINFORCEMENT 5' BEYOND THE EDGES OF ROADWAYS AND PAVED ROADS.
3. EXCAVATION, BACKFILL, AND COMPACTION IN ACCORDANCE WITH SPECIFICATION 33 71 02.
4. BOND THE DUCTBANK GROUND CABLE TO THE GROUND COUNTERPOISE.
5. REFER TO "CONDUIT REQUIREMENTS FOR HAZARDOUS & NON-HAZARDOUS AREAS" ON EF002 FOR MATERIAL AND INSTALLATION REQUIREMENTS WHEN STUBBING UP IN HAZARDOUS AND NON-HAZARDOUS AREAS. REFER TO SHEET EF002 FOR CONDUIT LABELING REQUIREMENTS. REFER TO SPEC 33 71 02 FOR BENDING RADIUS REQUIREMENTS.
6. PROVIDE FOUR FABRIC INNERDUCTS FOR 4-INCH COMMUNICATION CONDUITS.
7. OTHER BURIAL & SEPARATION REQUIREMENTS:
   - 36" BURIAL DEPTH FOR UTILITY PRIMARY CONDUITS
   - 12" MINIMUM VERTICAL SEPARATION WHEN UNDER PIPING OR OTHER UTILITIES.
   - 6" MINIMUM HORIZONTAL SEPARATION BETWEEN 'P', 'I/IS', 'C', AND 'T' DUCTBANKS.

C1 CONCRETE ENCASED DUCTBANK CONSTRUCTION - SECTION AND PROFILE

SCALE: NTS

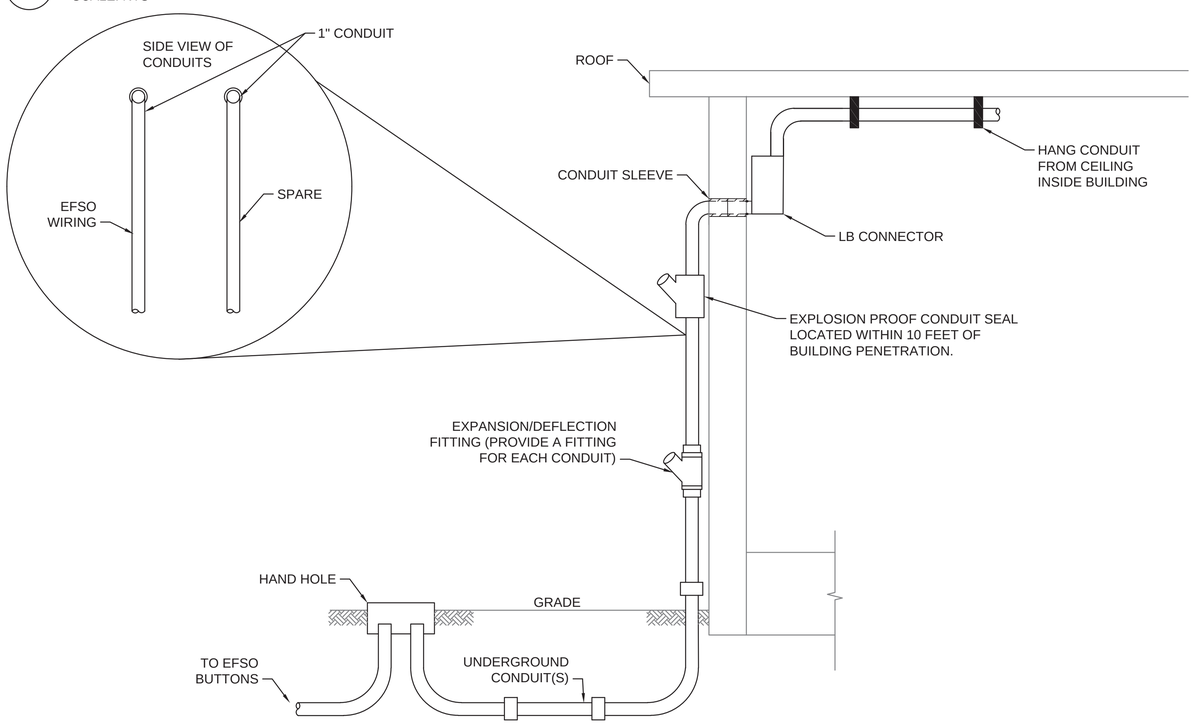

A1 UNDERGROUND CONDUIT BUILDING ENTRY DETAIL

SCALE: NTS

NAVFAC

TIM RENSHAW LICENSED 25719 KANSAS PROFESSIONAL ENGINEER

15 JAN 2026

SEAL

Jacobs / BURNS & McDONNELL

JACOBS/B&M, A JOINT VENTURE
1100 NORTH GLEBE ROAD
SUITE 500
ARLINGTON, VA 22201

A/E Contract No. N62742-20-D-0002
A/E Task Order No. N62742-21F0315
JCG NO. D3430603

A/E INFO

APPROVED

FOR COMMANDER NAVFAC DATE 02/02/2026

ACTIVITY
AFIMSC APPROVAL PER NAVFAC SAT-TO CHECKLIST

SATISFACTORY TO DATE 31 DEC 2025

DES: TSR	DRW: JTL	REV: DAB	
PM/DM			KKK
BRANCH MANAGER			SMK
CHIEF ENG/ARCH			SMK
FIRE PROTECTION			RO

DEPARTMENT OF THE NAVY
NAVAL FACILITIES ENGINEERING SYSTEMS COMMAND
NAVFAC PACIFIC
NAVAL FACILITIES ENGINEERING SYSTEMS COMMAND – PACIFIC
JOINT REGION MARIANAS (JRM)
ANDERSEN AIR FORCE BASE
GUAM

FY24 AJJY183012 (P-012),
PDI: NORTH AIRCRAFT PARKING RAMP

ELECTRICAL SITE DETIALS - DUCT BANKS

SCALE: AS SHOWN
EPROJECTS NO.: 1665555
CONSTR CONTROL NO.
NAVFAC DRAWING NO. 17361994
SHEET 371 OF 377

EF504

REDESIGN FINAL SUBMITTAL

IF SHEET IS LESS THAN 22" X 34" REDUCED PRINT. USE GRAPHIC SCALES

FILE NAME: \\bmcd\gfs\Clients\ANF\USNavy\Pac\133097_GuamP012NAR\Design\Elec\Sheets\P012_1665555_EF504.dwg
LAYOUT NAME: Layout1
PLOTTED: 01/15/2026 10:31am
USER: llewis

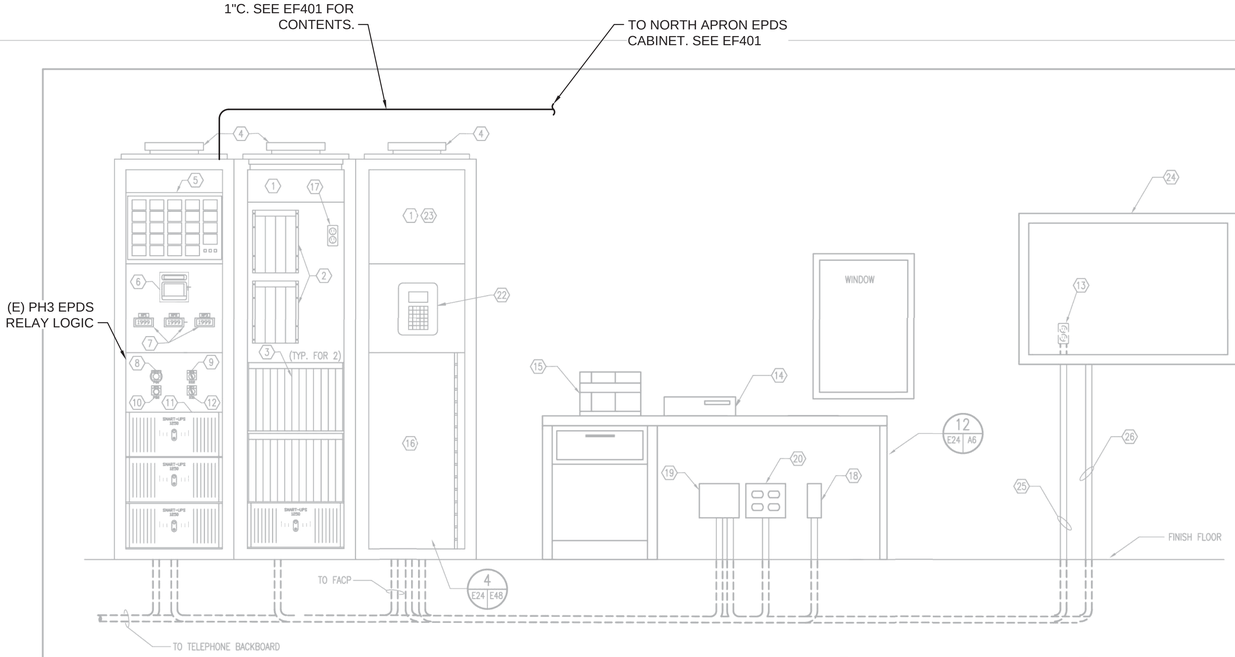

A E15|E24 ELEVATION – PUMP CONTROL PANEL
N.T.S.

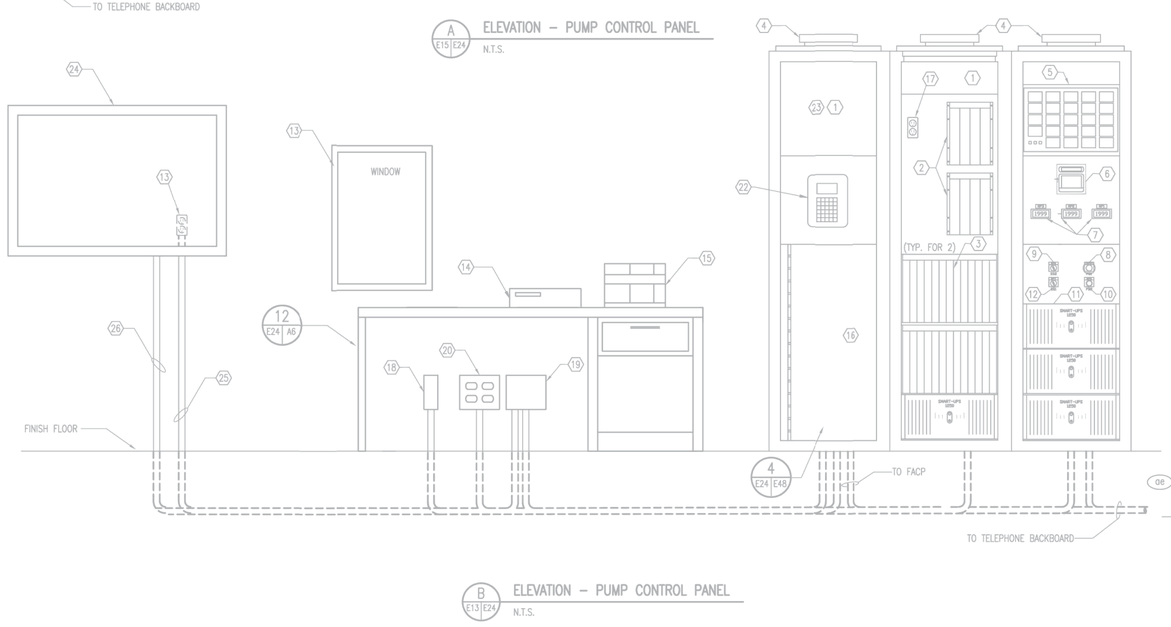

B E13|E24 ELEVATION – PUMP CONTROL PANEL
N.T.S.

NOTES:

1. FOR CLARITY SHOWN WITH DOOR REMOVED.
2. PLC
3. I/O RACK
4. RACK EXHAUST FAN
5. ALARM ANNUNCIATOR
6. FLOW AND PRESSURE RECORDER
7. TANK LEVEL DIGITAL METERS
8. EFSO SWITCH (EFSO–24)
9. OPERATING MODE SELECTOR SWITCH
10. EFSO RESET SWITCH
11. UNINTERRUPTABLE POWER SUPPLY (TYPICAL FOR 3).
12. LEAD PUMP SELECTOR SWITCH
13. NEMA 5–20 OR DUPLEX RECEPTACLE BEHIND DISPLAY
14. CPU (FOR CLARITY KEYBOARD NOT SHOWN)
15. PRINTER
16. PROVIDE RAIL MOUNTED TERMINAL STRIPS BEHIND HINGED DOOR PANEL FOR INCOMING SIGNAL AND DATA LINES PROVIDE A COPY OF THE CONTROL CONDUCTOR RUNNING LIST IN THE PRINT HOLDER ON THE BACK SIDE OF THE DOOR.
17. NEMA 5–20R DUPLEX RECEPTACLE
18. TELEPHONE RECEPTACLE
19. DATA RECEPTACLE WIRED FROM I/O RACKS AND GRAPHICAL DISPLAY
20. DOUBLE DUPLEX RECEPTACLE FED FROM UPS IN PCP.
21. SEE WIRING AND CONDUIT SCHEDULE ON DWG E48.
22. PANEL MOUNTED OPERATOR TERMINAL WITH 4 X 40 LCD WITH LED BACKLIGHTING AND 30 KEY SEALED MEMBRANE KEYPAD.
23. RTU 8130 COMMUNICATION INTERFACE UNIT MOUNTED ON REAR OF PANEL.
24. FLAT PANEL GRAPHIC DISPLAY (MOUNTED ON WALL BETWEEN ROOMS 101 AND 102)
25. 2–#12&1–#12G IN 3/4"C TO UPS IN PCP
26. 7/C–#20 SHIELDED CABLE AND BNC CABLE IN 3/4"C TO DATA RECEPTACLE.

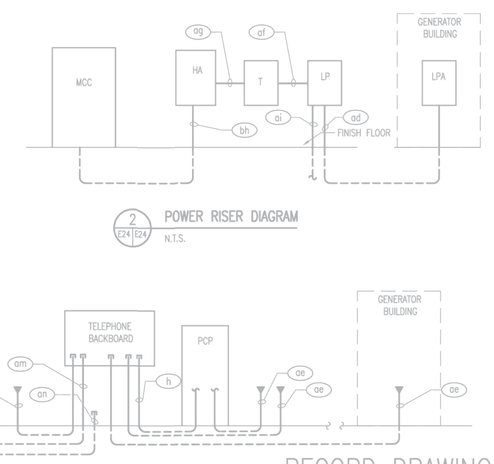

2 E24|E24 POWER RISER DIAGRAM
N.T.S.

3 E24|E24 TELEPHONE RISER DIAGRAM
N.T.S.

RECORD DRAWING
12/23/05

SYM.	DESCRIPTION	DATE	APPROVED
1	AS-BUILT	8/04/05	

REVISIONS

Robert and Company
Engineers • Architects • Planners
Atlanta, Georgia 30309

CONSULT BY: DATE
FILE: PROJ. MGR. JAC; DR. BY JBC; CHK. BY GM; SPY. BY JAC; SPY. BY JBC; APPROVED: CLYDE T. WOMACK FOR COMMANDER NAVFAC 8/19/02
CHKD BY: CHB; CH. DSG. CAL; CH. ARC. JAC; DATE 8/19/02
DRAWN BY: LARRY BEASLEY, CAD; FIRE MARSHAL (FM2): SOL

DEPARTMENT OF THE NAVY
NAVAL FACILITIES ENGINEERING SYSTEMS COMMAND
PACIFIC DIVISION
NAVAL FACILITIES ENGINEERING COMMAND GUAM
ANDERSEN AFB
REPLACE POL HYDRANT FUELING SYSTEM
PHASE 3 AND PHASE 4
PUMP CONTROL PANEL ELEVATIONS
AJJY-98-3903/3905

CODE IDENT. NO. 80091
SIZE: D
CONSTRN. CONTR. NO. N62742-01-C-1353
SPEC. NO. 40-01-1353
NAVFAC DRAWING NO. 7957206
SHEET 219 OF 257
E24

RAC JOB NO. 01771-00

BURNS McDONNELL

THE REGISTRANT OF THE NEWLY APPLIED SEAL, DATED 11/3/25, ONLY ASSUMES RESPONSIBILITY FOR THE CHANGES AS INDICATED ON BURNS & McDONNELL DRAWING EF511 REVISION A.

NAVFAC

TIM RENSHAW LICENSED 25719 KANSAS PROFESSIONAL ENGINEER
15 JAN 2026
SEAL

Jacobs / BURNS McDONNELL
JACOBS/B&M, A JOINT VENTURE
1100 NORTH GLEBE ROAD
SUITE 500
ARLINGTON, VA 22201

A/E Contract No. N62742-20-D-0002
A/E Task Order No. N62742-21F0315
JCG NO. D2430603
A/E INFO

APPROVED
FOR COMMANDER NAVFAC DATE 02/02/2026

ACTIVITY
AFIMSC APPROVAL PER NAVFAC SAT-TO CHECKLIST

SATISFACTORY TO DATE 31 DEC 2025

DES: TSR DRW: JTL REV: DAB
PM/DM KKK
BRANCH MANAGER SMK
CHIEF ENG/ARCH SMK
FIRE PROTECTION RO

DEPARTMENT OF THE NAVY
NAVAL FACILITIES ENGINEERING SYSTEMS COMMAND
NAVFAC PACIFIC
ANDERSEN AIR FORCE BASE
NAVAL FACILITIES ENGINEERING SYSTEMS COMMAND – PACIFIC
JOINT REGION MARIANAS (JRM)
GUAM
FY24 AJJY183012 (P-012),
PDI: NORTH AIRCRAFT PARKING RAMP
ELEVATION - PUMP CONTROL PANEL

SCALE: AS SHOWN
EPROJECTS NO.: 1665555
CONSTR CONTROL NO.
NAVFAC DRAWING NO. 17361995
SHEET 372 OF 377

EF511

REDESIGN FINAL SUBMITTAL

IF SHEET IS LESS THAN 22" X 34" REDUCED PRINT. USE GRAPHIC SCALES

FILE NAME: \\bmcd\gfs\Clients\ANF\USNavy\Pac\133097_GuamP012NAR\Design\Elec\Sheets\P012_1665555_EF511.dwg
LAYOUT NAME: Layout1
PLOTTED: 01/15/2026 10:31am
USER: llewis

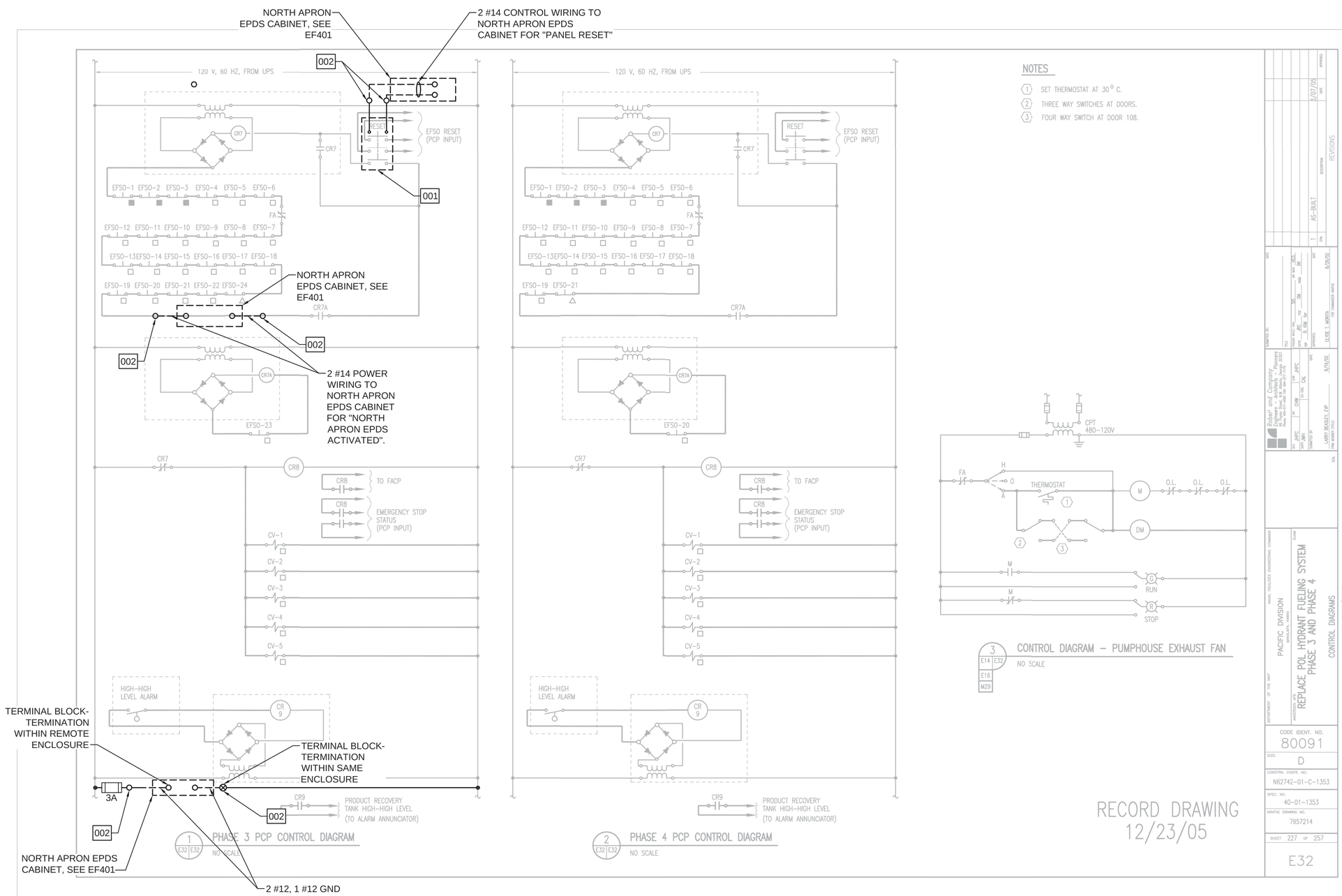

KEYED NOTES

001	PROVIDE BUTTON ASSEMBLY TO ACCOMMODATE ADDITIONAL DRY CONTACTS ON RESET PUSHBUTTON
002	PROVIDE TERMINAL BLOCKS WITHIN PUMP CONTROL PANEL TO ACCEPT WIRING FROM NORTH APRON EPDS CABINET

BURNS McDONNELL

THE REGISTRANT OF THE NEWLY APPLIED SEAL, DATED 11/3/25, ONLY ASSUMES RESPONSIBILITY FOR THE CHANGES AS INDICATED ON BURNS & McDONNELL DRAWING EF611 REVISION A.

15 JAN 2026

SEAL

Jacobs / BURNS McDONNELL

JACOBS/B&M, A JOINT VENTURE
1100 NORTH GLEBE ROAD
SUITE 500
ARLINGTON, VA 22201

A/E Contract No. N62742-20-D-0002
A/E Task Order No. N6274221F0315
JCG NO. 1234/30603

A/E INFO

APPROVED

FOR COMMANDER NAVFAC DATE 02/02/2026

ACTIVITY
AFIMSC APPROVAL PER NAVFAC SAT-TO CHECKLIST

SATISFACTORY TO DATE 31 DEC 2025

DES:	TSR	DRW: JTL	REV: DAB
PM/DM			KKK
BRANCH MANAGER			SMK
CHIEF ENG/ARCH			SMK
FIRE PROTECTION			RO

DEPARTMENT OF THE NAVY
NAVFAC PACIFIC
NAVAL FACILITIES ENGINEERING SYSTEMS COMMAND
NAVAL FACILITIES ENGINEERING SYSTEMS COMMAND – PACIFIC
JOINT REGION MARIANAS (JRM)
ANDERSEN AIR FORCE BASE
GUAM

FY24 AJJY183012 (P-012),
PDI: NORTH AIRCRAFT PARKING RAMP

PCP - CONTROL DIAGRAM

SCALE: AS SHOWN
EPROJECTS NO.: 1665555
CONSTR CONTROL NO.
NAVFAC DRAWING NO. 17361996
SHEET 373 OF 377

EF611

REDESIGN FINAL SUBMITTAL

IF SHEET IS LESS THAN 22" X 34" REDUCED PRINT. USE GRAPHIC SCALES

FILE NAME: \\bmcd\dfs\Clients\ANF\USNavy\Pac\133097_GuamP012NAR\Design\Elec\Sheets\P012_1665555_EF611.dwg
LAYOUT NAME: Layout1
PLOTTED: 01/15/2026 10:32am
USER: lfewts

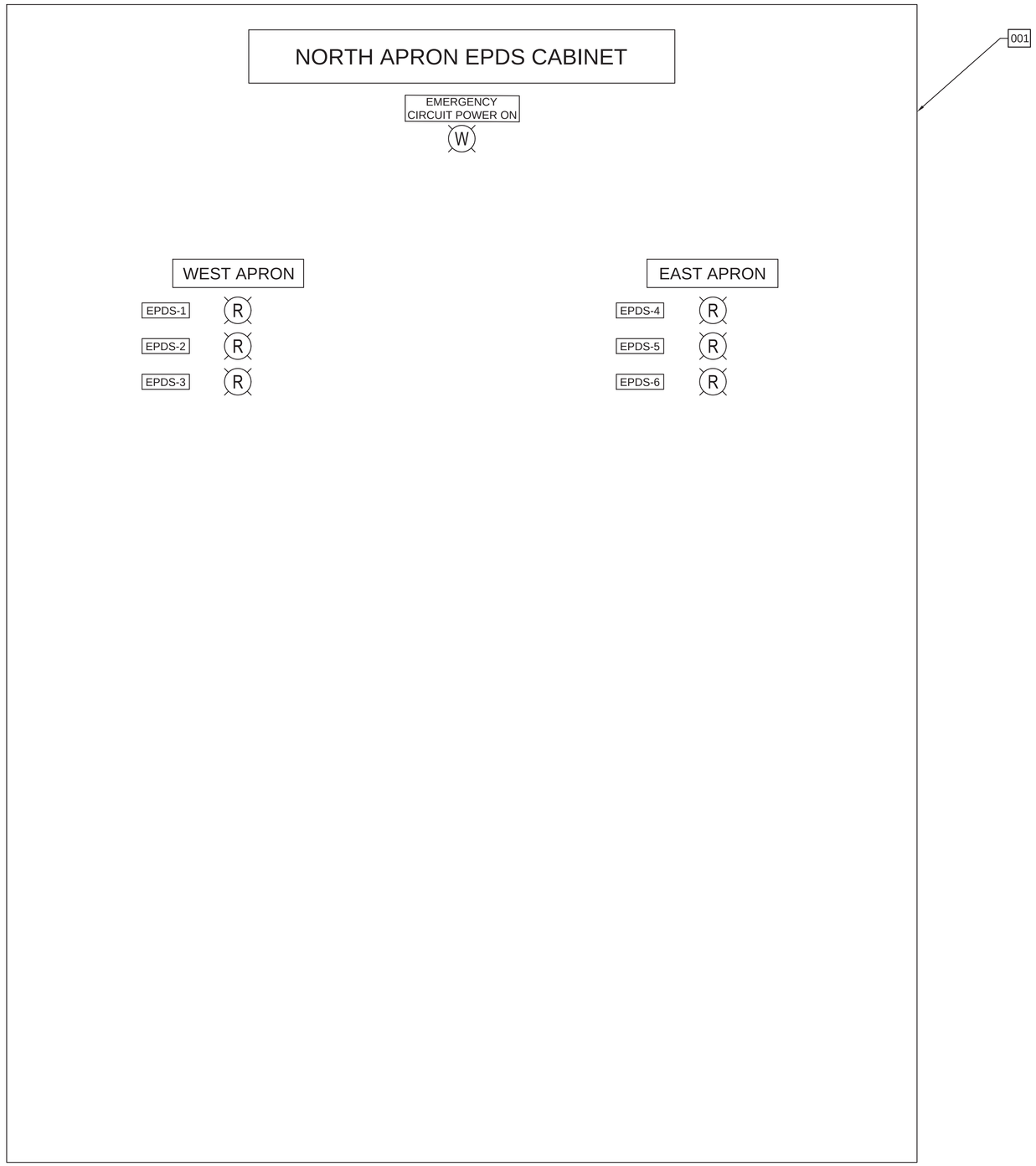

A1 EPDS PANEL LAYOUT
SCALE: NTS

GENERAL NOTES

A.	SEE EF001 AND EF002 FOR LEGEND, ABBREVIATIONS AND GENERAL NOTES.
B.	PANEL LAYOUT IS DIAGRAMMATIC. EXACT PANEL LAYOUT MUST BE SUBMITTED FOR APPROVAL.
C.	SEE EF101 FOR EPDS PLACEMENT

KEYED NOTES

001	LOCKABLE, FREE STANDING ENCLOSURE. DOOR MUST INCLUDE COPPER BRAIDED BONDING STRAPS BONDING THE DOOR TO THE CABINET. CONTRACTOR TO FINALIZE ENCLOSURE SIZE. ENCLOSURE MUST BE NEMA 1 / NEMA 12.

NAVFAC

TIM RENSHAW LICENSED 25719 KANSAS PROFESSIONAL ENGINEER
15 JAN 2026
SEAL

Jacobs / BURNS McDONNELL
JACOBS/B&M, A JOINT VENTURE
1100 NORTH GLEBE ROAD
SUITE 500
ARLINGTON, VA 22201

A/E Contract No. N62742-20-D-0002
A/E Task Order No. N6274221F0315
JCG NO. 0343/0603
A/E INFO

APPROVED
FOR COMMANDER NAVFAC DATE 02/02/2026

ACTIVITY
AFIMSC APPROVAL PER NAVFAC SAT-TO CHECKLIST

SATISFACTORY TO DATE 31 DEC 2025

DES: TSR	DRW: JTL	REV: DAB	
PM/DM			KKK
BRANCH MANAGER			SMK
CHIEF ENG/ARCH			SMK
FIRE PROTECTION			RO

DEPARTMENT OF THE NAVY
NAVAL FACILITIES ENGINEERING SYSTEMS COMMAND
NAVFAC PACIFIC
NAVAL FACILITIES ENGINEERING SYSTEMS COMMAND – PACIFIC
JOINT REGION MARIANAS (JRM)
ANDERSEN AIR FORCE BASE
GUAM
FY24 AJJY183012 (P-012),
PDI: NORTH AIRCRAFT PARKING RAMP
NORTH APRON EPDS - FRONT LAYOUT

SCALE: AS SHOWN
EPROJECTS NO.: 1665555
CONSTR CONTROL NO.
NAVFAC DRAWING NO.
17361997
SHEET 374 OF 377

EF621

REDESIGN FINAL SUBMITTAL

IF SHEET IS LESS THAN 22" X 34"
REDUCED PRINT. USE GRAPHIC SCALES

FILE NAME: \\bmcd\dfs\Clients\ANF\USNavy\Pac\133097_GuamP012NAR\Design\Elec\Sheets\P012_1665555_EF621.dwg
LAYOUT NAME: Layout1
PLOTTED: 01/15/2026 10:32am
USER: llewis

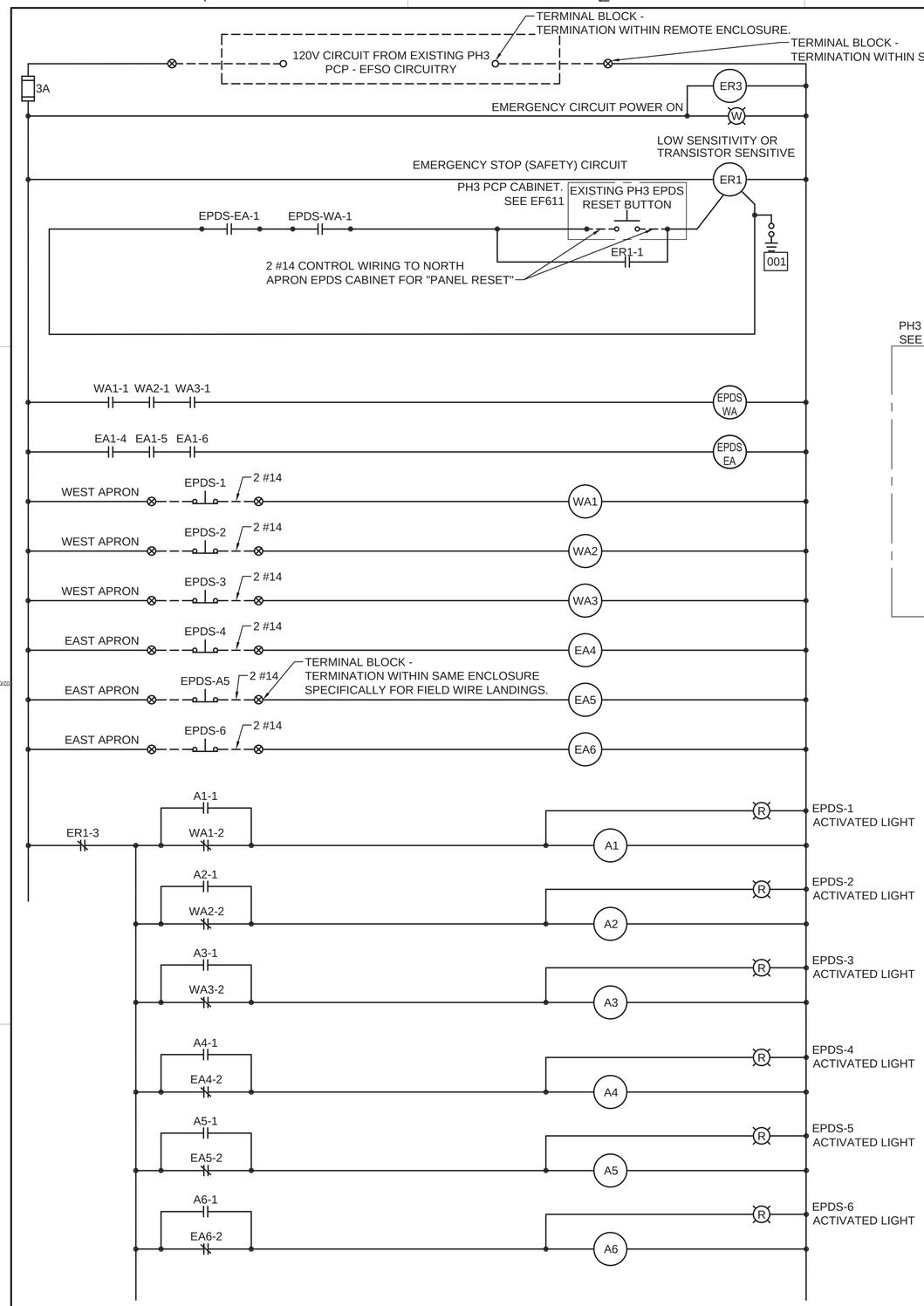

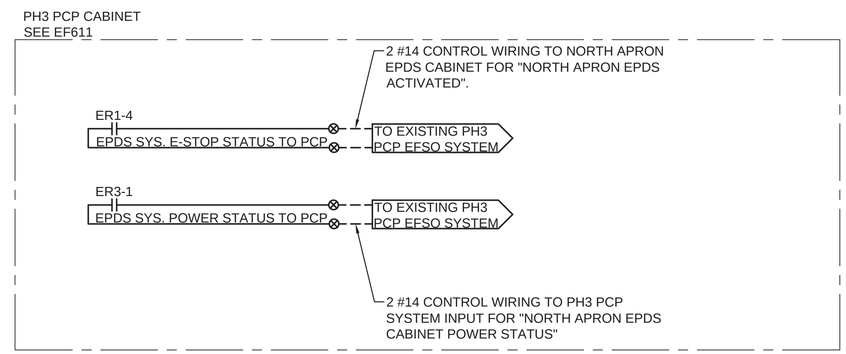

GENERAL NOTES

A.	SEE EF001 AND EF002 FOR LEGEND, ABBREVIATIONS AND GENERAL NOTES.

KEYED NOTES

001	SIGNAL AND DATA LINE PROTECTOR.

LEGEND

WA	WEST APRON
EA	EAST APON

NAVFAC

TIM RENSHAW LICENSED 25719 KANSAS PROFESSIONAL ENGINEER

15 JAN 2026

SEAL

Jacobs / BURNS McDONNELL

JACOBS/B&M, A JOINT VENTURE
1100 NORTH GLEBE ROAD
SUITE 500
ARLINGTON, VA 22201

A/E Contract No. N62742-20-D-0002
A/E Task Order No. N6274221F0315
JCG NO. 0341B003

A/E INFO

APPROVED

FOR COMMANDER NAVFAC DATE 02/02/2026

ACTIVITY
AFIMSC APPROVAL PER NAVFAC SAT-TO CHECKLIST

SATISFACTORY TO DATE 31 DEC 2025

DES:	TSR	DRW: JTL	REV: DAB
PM/DM			KKK
BRANCH MANAGER			SMK
CHIEF ENG/ARCH			SMK
FIRE PROTECTION			RO

DEPARTMENT OF THE NAVY
NAVFAC PACIFIC
NAVAL FACILITIES ENGINEERING SYSTEMS COMMAND
NAVAL FACILITIES ENGINEERING SYSTEMS COMMAND – PACIFIC
JOINT REGION MARIANAS (JRM)
ANDERSEN AIR FORCE BASE
GUAM

FY24 AUJY183012 (P-012),
PDI: NORTH AIRCRAFT PARKING RAMP

NORTH APRON EPDS WIRING - 1

SCALE: AS SHOWN
EPROJECTS NO.: 1665555
CONSTR CONTROL NO.
NAVFAC DRAWING NO. 17361998
SHEET 375 OF 377

EF622

REDESIGN FINAL SUBMITTAL

IF SHEET IS LESS THAN 22" X 34"
REDUCED PRINT. USE GRAPHIC SCALES

FILE NAME: \\bmcd\afs\Clients\ANF\USNavy\Pac\133097_GuamP012NAR\Design\Elec\Sheets\P012_1665555_EF622.dwg
LAYOUT NAME: Layout1
PLOTTED: 01/15/2026 10:33am
USER: ttews

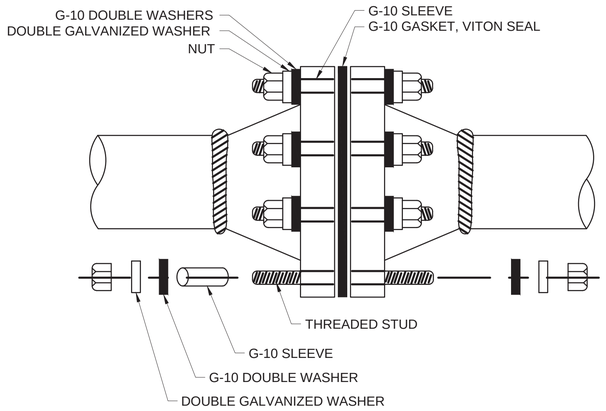

NOTES:
1. WELD NECK FLANGE SHOWN. ASSEMBLY ON OTHER FLANGES IS SIMILAR.
2. INSULATING MATERIALS ARE TO BE SELECTED FOR COMPATIBILITY WITH PRODUCT IN THE PIPELINE AND THE OPERATING CONDITIONS.

C1 DIELECTRIC GASKET ASSEMBLY
SCALE: NTS

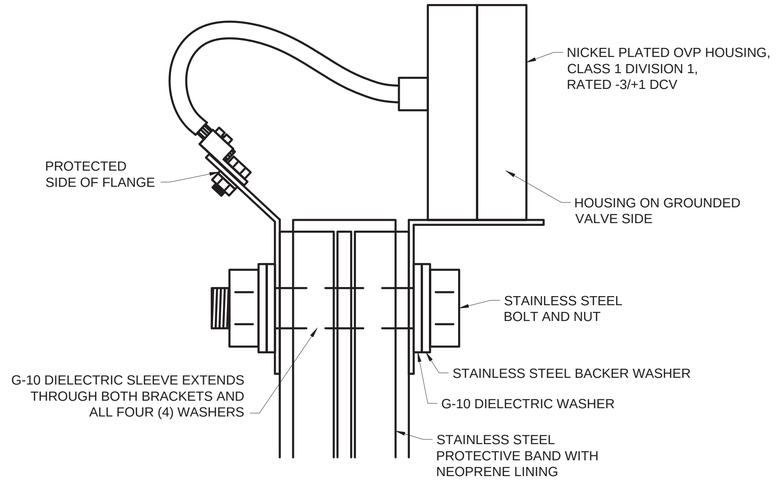

C3 OVP AND PROTECTIVE FLANGE BAND
SCALE: NTS

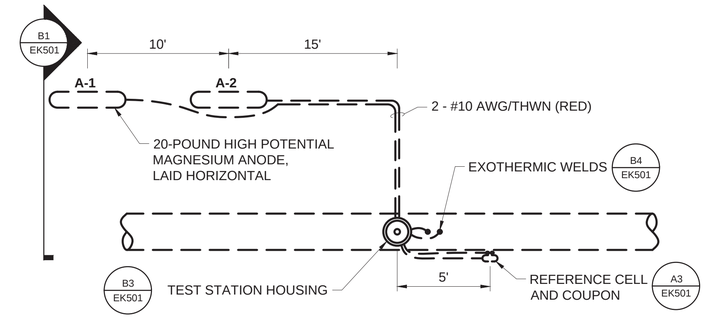

C4 HYDRANT LOOP TEST STATION - PLAN
SCALE: NTS

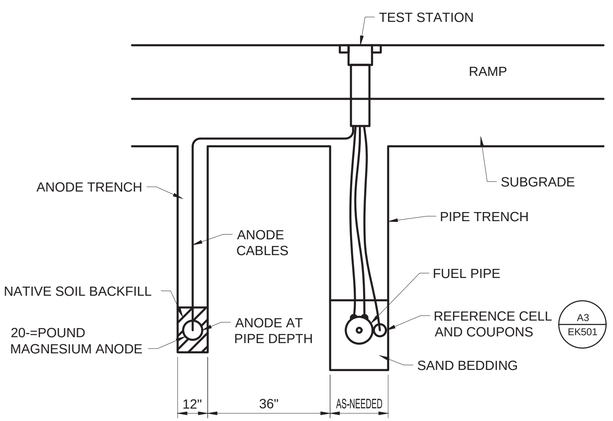

B1 CATHODIC PROTECTION TEST STATION - SECTION
SCALE: NTS

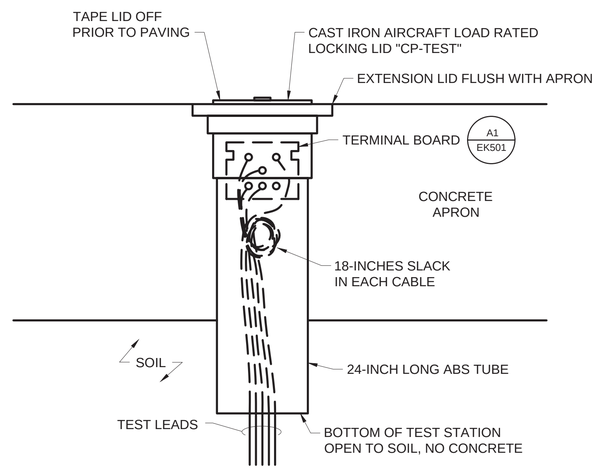

B3 TEST STATION HOUSING - SECTION
SCALE: NTS

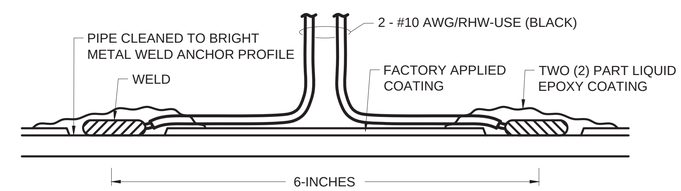

B4 EXOTHERMIC WELD CONNECTION
SCALE: NTS

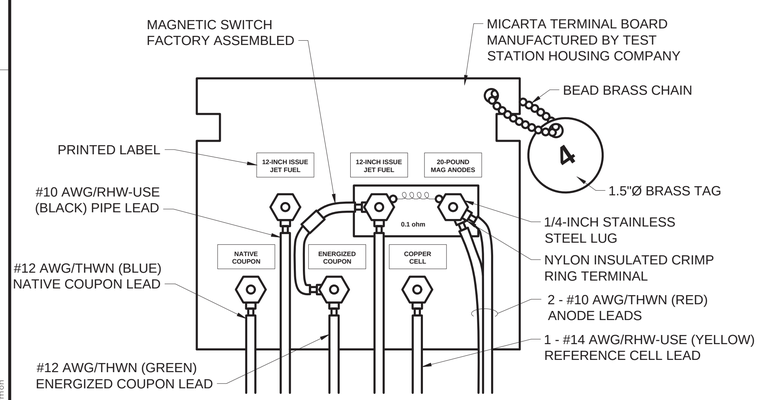

A1 TEST STATION TERMINAL BOARD
SCALE: NTS

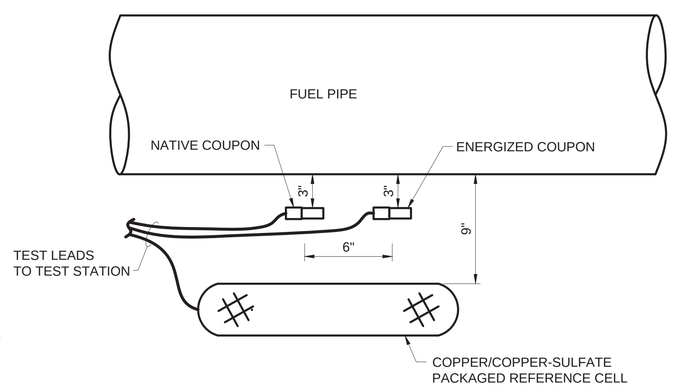

A3 REFERENCE CELL AND COUPONS
SCALE: NTS

TEST STATION LEGEND

STATION NUMBER	PROTECTED PIPE	DRAWING LOCATION	PIPELINE STATIONING	GPS (FUTURE)	
				LATITUDE	LONGITUDE
TS-1	12" JF2	CF201	00+20		
TS-2	12" JF2	CF202	07+00		
TS-3	12" JF2	CF204	14+00		
TS-4	12" JF2	CF206	21+00		
TS-5	12" JF2	CF207	28+00		
TS-6	12" JF2	CF209	35+00		
TS-7	12" JF1	CF209	00+20		
TS-8	12" JF1	CF207	07+10		
TS-9	12" JF1	CF206	14+10		
TS-10	12" JF1	CF201	22+40		
TS-11	14" PH3	CF209	N/A		
TS-12	14" PH3	CF209	N/A		

A4 TEST STATION LEGEND
SCALE: NTS

Craig K. Meier
NACE 6552
Cathodic Protection Specialist

Craig K. Meier, VP
NACE C P Specialist #6552
DOT/OPS #0083547

JACOBS/B&M, A JOINT VENTURE
1100 NORTH GLEBE ROAD
SUITE 500
ARLINGTON, VA 22201

A/E Contract No. N62742-20-D-0002
A/E Task Order No. N62742-21F0315
JEG NO. D2430603

A/E INFO

APPROVED
FOR COMMANDER NAVFAC DATE 02/02/2026

ACTIVITY
AFIMSC APPROVAL PER NAVFAC SAT-TO CHECKLIST

SATISFACTORY TO DATE 31 DEC 2025

DES: CKM DRW: CKM REV: CKM
PM/DM KKK
BRANCH MANAGER SMK
CHIEF ENG/ARCH SMK
FIRE PROTECTION RO

DEPARTMENT OF THE NAVY
NAVAL FACILITIES ENGINEERING SYSTEMS COMMAND
NAVFAC PACIFIC
NAVAL FACILITIES ENGINEERING SYSTEMS COMMAND – PACIFIC
JOINT REGION MARIANAS (JRM)
ANDERSEN AIR FORCE BASE
GUAM

FY24 AJJY183012 (P-012),
PDI: NORTH AIRCRAFT PARKING RAMP
CATHODIC PROTECTION - DETAILS

SCALE: AS SHOWN
EPROJECTS NO.: 1665555
CONSTR CONTROL NO.
NAVFAC DRAWING NO. 17361999
SHEET 376 OF 377

EK501

REDESIGN FINAL SUBMITTAL

IF SHEET IS LESS THAN 22" X 34" REDUCED PRINT. USE GRAPHIC SCALES

FILE NAME: Z:\Clients\ANF\USNavy\Poc\133097_Guam\P012NAR\Design\Mech\Sheets\P012_1665555_EK501.dwg
LAYOUT NAME: CATHODIC PROTECTION – DETAILS
PLOTTED: 01/15/2026 12:24pm
USER: hgharamon

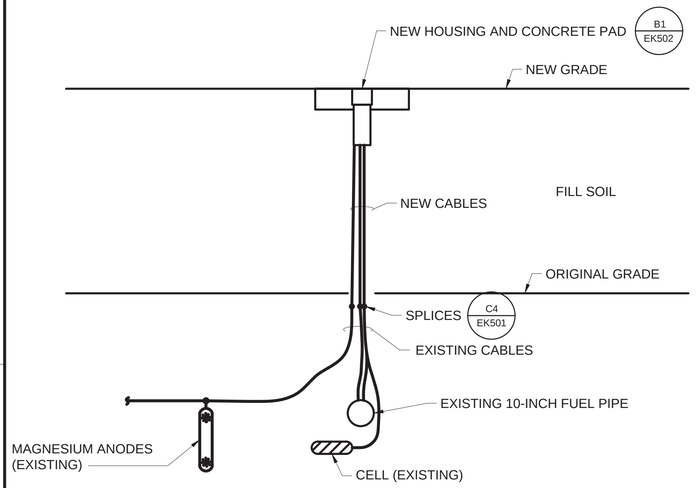

C1 RAISE EXISTING CP TEST STATIONS
SCALE: NTS

DETAIL ONLY APPLIES IF EXISTING TEST STATION HOUSING MUST BE RELOCATED

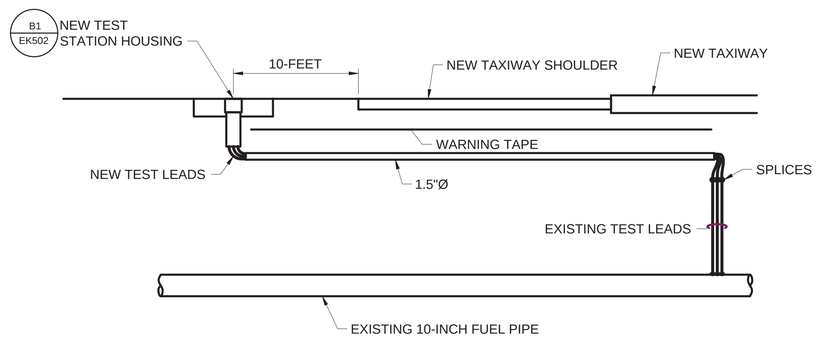

C3 RELOCATE EXISTING TEST STATIONS
SCALE: NTS

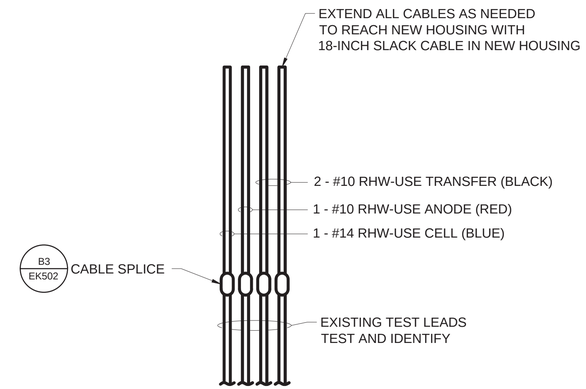

C4 EXTEND EXISTING CP TEST LEADS
SCALE: NTS

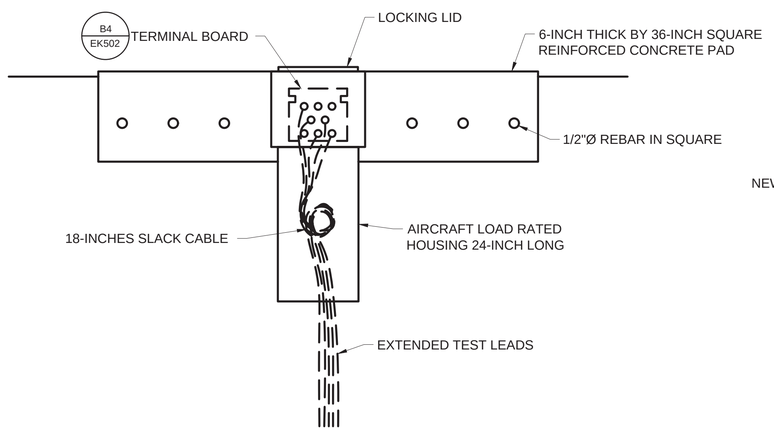

B1 NEW TEST STATION HOUSING
SCALE: NTS

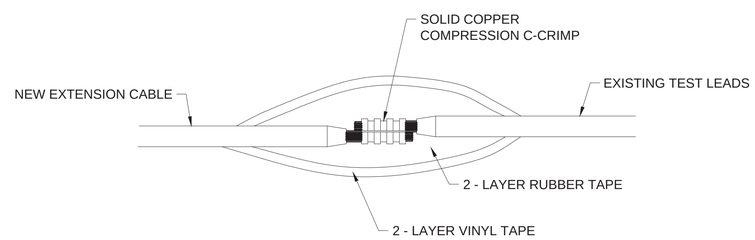

B3 TEST LEAD SPLICE
SCALE: NTS

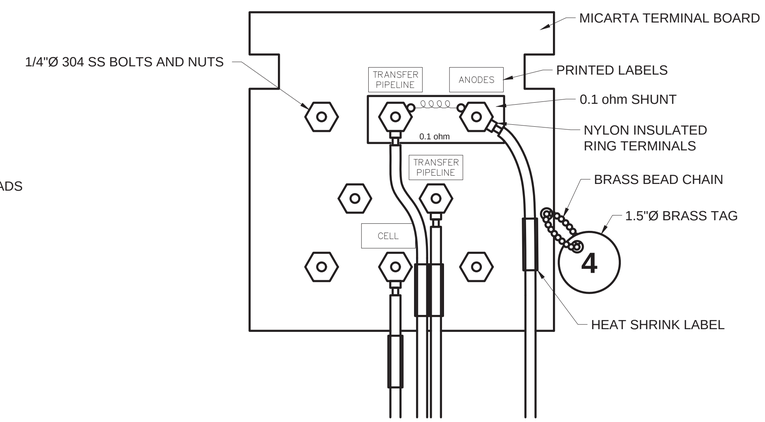

B4 TERMINAL BOARD - RELOCATED TEST STATIONS
SCALE: NTS

EXISTING TEST STATION SCHEDULE

TEST STATION NUMBER	PIPE PROTECTED	GPS LATITUDE	GPS LONGITUDE	DRAWING
9T	10" TRANSFER	13.587532871127861	144.91721441454033	CF209
10T	10" TRANSFER	13.587125028009693	144.91625247670405	CF208
11T	10" TRANSFER	13.586643155567407	144.91508067235532	CF207
12T	10" TRANSFER	13.58611334820279	144.9139126613513	CF101
13T	10" TRANSFER	13.58559825957867	144.91272018681113	CF101

Craig K. Meier, VP
NACE C P Specialist #6552
DOT/OPS #0083547

JACOBS/B&M, A JOINT VENTURE
1100 NORTH GLEBE ROAD
SUITE 500
ARLINGTON, VA 22201

A/E Contract No. N62742-20-D-0002
A/E Task Order No. N6274221F0315
JCG NO. 0343003

APPROVED
FOR COMMANDER NAVFAC DATE 02/02/2026

ACTIVITY
AFIMSC APPROVAL PER NAVFAC SAT-TO CHECKLIST

SATISFACTORY TO DATE 31 DEC 2025

DES: CKM DRW: CKM REV: CKM
PM/DM KKK
BRANCH MANAGER SMK
CHIEF ENG/ARCH SMK
FIRE PROTECTION RO

DEPARTMENT OF THE NAVY
NAVAL FACILITIES ENGINEERING SYSTEMS COMMAND
NAVFAC PACIFIC
NAVAL FACILITIES ENGINEERING SYSTEMS COMMAND – PACIFIC
JOINT REGION MARIANAS (JRM)
ANDERSEN AIR FORCE BASE
GUAM
FY24 AJJY183012 (P-012),
PDI: NORTH AIRCRAFT PARKING RAMP
CATHODIC PROTECTION - DETAILS

SCALE: AS SHOWN
EPROJECTS NO.: 1665555
CONSTR CONTROL NO.
NAVFAC DRAWING NO. 17362000
SHEET 377 OF 377
EK502

REDESIGN FINAL SUBMITTAL

FILE NAME: Z:\Clients\ANF\USNavy\Pac\133097_GuamP012NAR\Design\Mech\Sheets\P012_1665555_EK502.dwg
LAYOUT NAME: CATHODIC PROTECTION – DETAILS
PLOTTED: 01/15/2026 12:25pm
USER: hghormon

IF SHEET IS LESS THAN 22" X 34"
REDUCED PRINT. USE GRAPHIC SCALES