Regency Tables & Sinks

Project: _____ Date: _____ Approval: _____ Qty: ____ Item #: 600UT3084S

U0009

REGENCY
Tables and Sinks

Regency Adjustable Stainless Steel Work Table Undershelf for 30" x 84" Tables - 18 Gauge

#600UT3084S

Technical Data

Length	78 Inches
Width	24 Inches
Adjustable Height	Adjustable
Compatible Table Size	30" x 84"
Gauge	18 Gauge
Material	Stainless Steel

Features

- Made of 18 gauge, type 430 stainless steel
- Adjustable
- Increases storage space
- Corrosion-resistant
- Works with Regency 30" x 84" stainless steel work tables

© 2024 Regency Tables & Sinks

Plan View

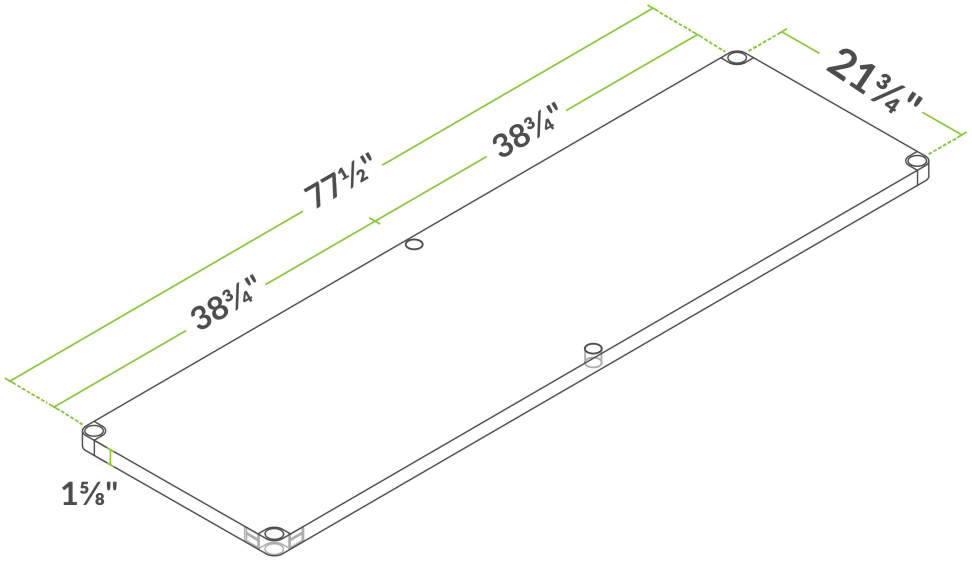

Notes & Details

Add valuable storage space to your Regency work table with this Regency adjustable stainless steel work table undershelf! This undershelf will work with 30" x 84" tables to provide an extra shelf for storing items like frequently used prep tools, cutting boards, bar towels, oven mitts, pans, trays, and more! Since this shelf is adjustable, you can move it higher or lower to accommodate larger items like some types of light equipment or large mixing bowls.

This work table undershelf is made of 18 gauge, type 430 stainless steel to ensure durability and corrosion resistance. Stainless steel is a great choice for food prep areas since it is easy to clean and sanitize, plus it provides a sleek, professional appearance that will fit right in to your commercial kitchen. Accessorize your work table with this undershelf to ensure a stable, sanitary storage area for commonly used items that you want to keep within arms' reach.

This undershelf is designed to fit 30" x 84" Regency work tables. Its actual dimensions are 6" shorter than the table in length and width because the table legs are set in under the table top.

⚠ **WARNING:** This product can expose you to chemicals including lead, which are known to the State of California to cause cancer, birth defects, or other reproductive harm. For more information, go to www.p65warnings.ca.gov.

© 2024 Regency Tables & Sinks

U0010

TRUE MANUFACTURING CO., INC.
U.S.A. FOODSERVICE DIVISION
2001 East Terra Lane • O'Fallon, Missouri 63366-4434 • (636)240-2400
Fax (636)272-2408 • Toll Free (800)325-6152 • Intl Fax# (001)636-272-7546
Parts Dept. (800)424-TRUE • Parts Dept. Fax# (636)272-9471 • www.truemfg.com

Project Name: _____ *AIA #*
Location: _____
Item #: _____ *Qty:* _____ *SIS #*
Model #: _____

Model:
TUC-48G-HC~FGD01

Undercounter:
Glass Door Refrigerator with Hydrocarbon Refrigerant~Framed Glass Door Version 01

TUC-48G-HC~FGD01

- True's undercounter units are designed with enduring quality that protects your long term investment.
- Designed using the highest quality materials and components to provide the user with colder product temperatures, lower utility costs, exceptional food safety and the best value in today's food service marketplace.
- Factory engineered, self-contained, capillary tube system using environmentally friendly R290 hydrocarbon refrigerant that has zero (0) ozone depletion potential (ODP), & three (3) global warming potential (GWP).
- High capacity, factory balanced refrigeration system that maintains cabinet temperatures of 33°F to 38°F (.5°C to 3.3°C) for the best in food preservation.
- All stainless steel front, top and ends. Corrosion resistant GalFan coated steel back.
- Interior - attractive, NSF approved, clear coated aluminum liner with stainless steel floor.
- Energy efficient, "Low-E", double pane thermal insulated glass doors.
- Heavy duty PVC coated wire shelves.
- Foamed-in-place using a high density, polyurethane insulation that has zero ozone depletion potential (ODP) and zero global warming potential (GWP).

ROUGH-IN DATA

Specifications subject to change without notice.
Chart dimensions rounded up to the nearest ⅛" (millimeters rounded up to next whole number).

Model	Doors	Shelves	Cabinet Dimensions (inches) (mm) W	D†	H*	HP	Voltage	Amps	NEMA Config.	Cord Length (total ft.) (total m)	Crated Weight (lbs.) (kg)
TUC-48G-HC~FGD01	2	4	48⅜ 1229	30⅛ 766	29¾ 756	⅕ N/A	115/60/1	3.0 N/A	5-15P	7 2.13	305 139

† Depth does not include 1" (26 mm) for rear bumpers and ½" (13 mm) for door handles.
* Height does not include 6¼" (159 mm) for castors or 6" (153 mm) for optional legs.

MADE WITH INNOVATION IN THE USA · 5 YEAR COMPRESSOR WARRANTY USA · UL · natural refrigerant

6/18-A Printed in U.S.A.

APPROVALS:

AVAILABLE AT:

Model:

TUC-48G-HC~FGD01

Undercounter:

Glass Door Refrigerator with Hydrocarbon Refrigerant~Framed Glass Door Version 01

STANDARD FEATURES

DESIGN

- True's commitment to using the highest quality materials and oversized refrigeration systems provides the user with colder product temperatures, lower utility costs, exceptional food safety and the best value in today's food service marketplace.

REFRIGERATION SYSTEM

- Factory engineered, self-contained, capillary tube system using environmentally friendly R290 hydrocarbon refrigerant that has zero (0) ozone depletion potential (ODP), & three (3) global warming potential (GWP).
- Oversized, factory balanced refrigeration system with guided airflow to provide uniform product temperatures.
- High capacity, factory balanced refrigeration system that maintains cabinet temperatures of 33°F to 38°F (.5°C to 3.3°C) for the best in food preservation.
- State of the art, electronically commutated evaporator and condenser fan motors. ECM motors operate at higher peak efficiencies and move a more consistent volume of air which produces less heat, reduces energy consumption and provides greater motor reliability.
- Condensing unit access in back of cabinet, slides out for easy maintenance.

CABINET CONSTRUCTION

- Exterior - stainless steel front, top and ends. Corrosion resistant GalFan coated steel back.
- Interior - attractive, NSF approved, clear coated aluminum liner. Stainless steel floor with coved corners.
- Insulation - entire cabinet structure is foamed-in-place using a high density, polyurethane insulation that has zero ozone depletion potential (ODP) and zero global warming potential (GWP).
- 5" (127 mm) diameter stem castors - locks provided on front set. 36" (915 mm) work surface height.

DOORS

- "Low-E", double pane thermal insulated glass door assembly with extruded aluminum frames.
- Each door fitted with 12" (305 mm) long extruded aluminum handle.
- Positive seal self-closing doors. Doors swing within cabinet dimensions.
- Magnetic door gaskets of one piece construction, removable without tools for ease of cleaning.

SHELVING

- Four (4) adjustable, heavy duty PVC coated wire shelves 21 9/16"L x 16"D (548 mm x 407 mm). Four (4) chrome plated shelf clips included per shelf.
- Shelf support pilasters made of same material as cabinet interior; shelves are adjustable on ½" (13 mm) increments.

LIGHTING

- LED interior lighting provides more even lighting throughout the cabinet. Safety shielded.

MODEL FEATURES

- Evaporator is epoxy coated to eliminate the potential of corrosion.
- NSF/ANSI Standard 7 compliant for open food product.

ELECTRICAL

- Unit completely pre-wired at factory and ready for final connection to a 115/60/1 phase, 15 amp dedicated outlet. Cord and plug set included.

115/60/1
NEMA-5-15R

OPTIONAL FEATURES/ACCESSORIES

Upcharge and lead times may apply.

- ❑ 230 - 240V / 50 Hz.
- ❑ 6" (153 mm) standard legs.
- ❑ 6" (153 mm) seismic/flanged legs.
- ❑ 2½" (64 mm) diameter castors.
- ❑ Barrel locks (factory installed). Requires one per door.
- ❑ Single overshelf.
- ❑ Double overshelf.
- ❑ TUC-27 Stacking collar.
- ❑ 30" (762 mm) deep, ½" (13 mm) thick, white polyethylene cutting board. Requires "L" brackets.
- ❑ 30" (762 mm) deep, ½" (13 mm) thick, composite cutting board. Requires "L" brackets.
- ❑ Heavy duty, 16 gauge tops.
- ❑ Exterior rectangular digital temperature display (factory installed).
- ❑ ADA compliant models with 34" (864 mm) work surface height.
- ❑ Low profile models with 31 7/8" (810 mm) work surface height.

PLAN VIEW

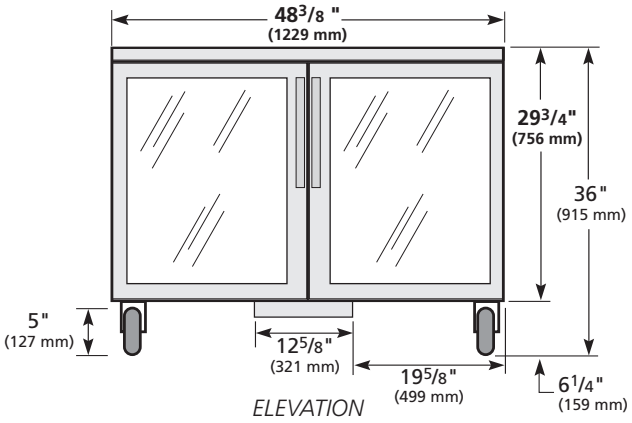

ELEVATION

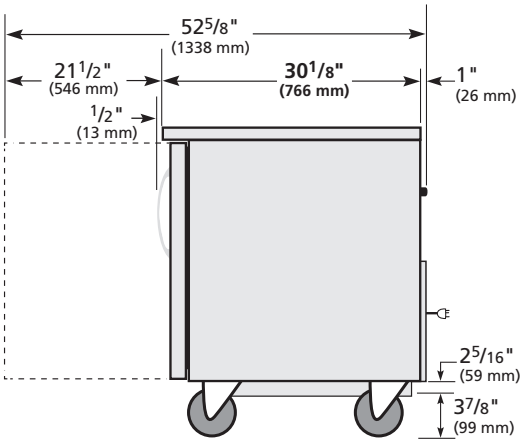

RIGHT VIEW

WARRANTY
Three year warranty on all parts and labor and an additional 2 year warranty on compressor. (U.S.A. only)

METRIC DIMENSIONS ROUNDED UP TO THE NEAREST WHOLE MILLIMETER

SPECIFICATIONS SUBJECT TO CHANGE WITHOUT NOTICE

Model	Elevation	Right	Plan	3D	Back
TUC-48G-HC~FGD01					

TRUE MANUFACTURING CO., INC.

2001 East Terra Lane • O'Fallon, Missouri 63366-4434 • (636)240-2400 • Fax (636)272-2408 • Toll Free (800)325-6152 • Intl. Fax# (001)636-272-7546 • www.truemfg.com

Project: _____ Date: _____ Approval: _____ Qty: ____ Item #: 600DOS1848

U0011

Regency Tables & Sinks

REGENCY
Tables and Sinks

Regency Stainless Steel Double Deck Overshelf - 18" x 48" x 32"

#600DOS1848

Technical Data

Length	48 Inches
Width	18 Inches
Height	32 Inches
Adjustable Height	Adjustable
Capacity	550 lb.
Features	NSF Listed
Gauge	18 Gauge
Material	Stainless Steel
Mounting Style	Side Mounted
Stainless Steel Type	Type 430

Features

- Made of 18 gauge, type 430 stainless steel
- Double shelf design for added capacity and organization
- Top shelf holds up to 550 lb. of weight and bottom shelf holds up to 280 lb.
- Adjustable lower shelf
- Adds valuable storage space to your kitchen

Certifications

NSF Listed

© 2024 Regency Tables & Sinks

Technical Data

Style	Double
Top Shelf Capacity	550 lb.
Type	Shelves
Undershelf Capacity	280 lb.

Plan View

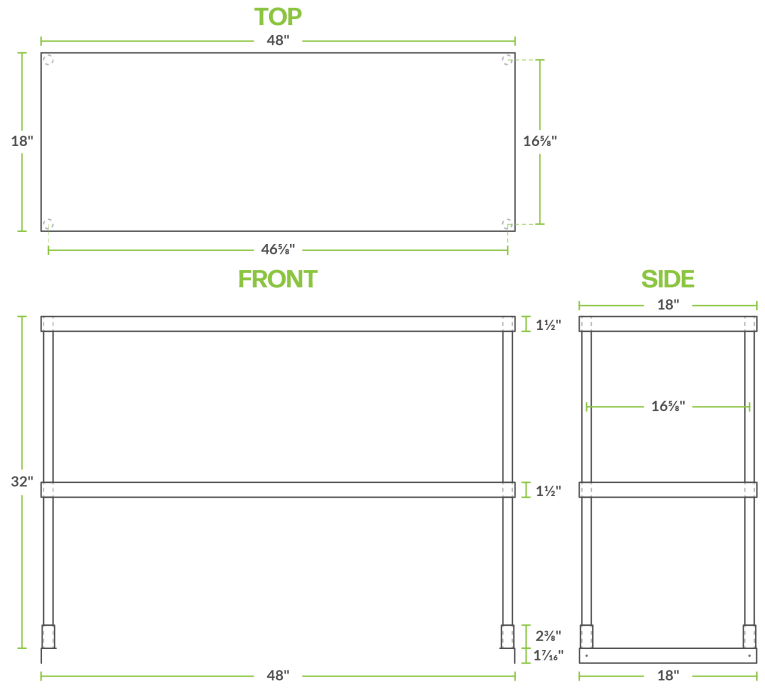

Notes & Details

Add extra storage space and organization to your kitchen with the Regency stainless steel double deck overshelf! This overshelf has two storage shelves to maximize the available space of your kitchen. Its stainless steel construction ensures long-lasting durability to stand up to repeated use, and the whole shelf easily mounts to the end of your table using the "L" brackets and 12 set screws provided. For added convenience, two additional set screws are included in this set.

The shelves are made of 18 gauge, type 430 stainless steel for excellent corrosion resistance and durability. The double shelf design adds more capacity than a single shelf and allows you to better organize your spices and seasoning, pans, cotton towels, oven mitts, and other frequently use cooking and preparation items. For great versatility, the top shelf holds up to 550 lb. of weight, and the bottom shelf holds up to 280 lb. This overshelf also ships knocked down and requires assembly.

⚠ **WARNING:** This product can expose you to chemicals including lead, which are known to the State of California to cause cancer, birth defects, or other reproductive harm. For more information, go to www.p65warnings.ca.gov.

© 2024 Regency Tables & Sinks

Item #: 177ID1800 Project: U0021

Qty: Date: Approval:

Avantco ID1800 Drop-In / Countertop Induction Range / Cooker - 120V, 1800W

Item #177ID1800

Technical Data

Width	12.203125 Inches
Depth	14 31/32 Inches
Height	2 9/16 Inches
Cutout Width	11.734375 Inches
Cutout Depth	14.109375 Inches
Cooking Surface Diameter	4 3/4 - 10 1/4 Inches
Recommended Pan Size (Bottom Diameter)	7 1/4 Inches
Hertz	60 Hertz
Phase	1 Phase
Voltage	120 Volts

Features

- Cooking surface diameter 4 3/4"-10 1/4"
- Easy-to-read LED display
- Electronic overheating protection
- Versatile design can be used as drop-in or countertop unit, making it a great choice for caterers
- No open flame makes this a safer alternative to conventional countertop ranges

Certifications

FCC Compliant **ETL, US & Canada**

Avantco Equipment

© 2024 Avantco Equipment

Avantco Equipment

Technical Data

Wattage	1800 Watts
Color	Black
Control Type	Digital Touchscreen
Features	Timer Touchscreen Controls
Installation Type	Countertop Drop In
Number of Burners	Burners Single
Number of Pieces	1
Number of Power Levels	7
Power Type	Electric
Suggested Weight Capacity	40 lb.
Temperature Range	140 - 460 Degrees F
Type	Heaters Induction Ranges
Usage	Front of House

Notes & Details

Efficiently cook a variety of your signature dishes with the Avantco ID1800 drop-in / countertop induction range / cooker! Induction ranges are perfect for creating omelet, stir fry, and pasta stations at your hotel breakfast bar, buffet, or catered event. Great for front-of-the-house display cooking, this induction range eliminates the need for open flames and helps reduce the amount of heat in the room for a safer, more comfortable cooking environment. Plus, this range boasts a sleek, drop-in design for a professional look that will impress your guests.

This induction range features 1800W of heating power in a compact and convenient footprint that sits flush with your countertop for easy use. The integrated touch controls make the unit simple to operate, and the large LED display clearly shows important information while you cook.

Made with a durable plastic frame and a hard glass top, this range ensures long-lasting durability while providing a sleek and modern appearance. The digital temperature controls let you modify temperature in 20 degree increments from 140 to 460 degrees Fahrenheit, and a convenient timer lets you set a countdown between 1 and 180 minutes. And because its top is made of single-piece glass, it can be cleaned by simply wiping it down at the end of a long and busy day. This unit requires a 120V electrical connection.

⚠ **WARNING:** This product can expose you to chemicals including lead, which are known to the State of California to cause cancer, birth defects, or other reproductive harm. For more information, go to www.p65warnings.ca.gov.

© 2024 Avantco Equipment

Job: _____ Item# U0022

BES/27

CONVECTION OVEN
B-SERIES
ELECTRIC, DOUBLE DECK

BES/27SC shown with optional casters

❑ BES/27SC

Standard Features

- Energy Star Compliant
- 7.5 kW high efficiency heating elements per oven cavity
- Available standard depth
- Double deck convection oven is 64.8” in height
- Patented “plug-in, plug-out” control panel - easy to service
- Slide out control panel for full view servicing
- Stainless Steel front, top and sides
- Dependent glass doors (Full 180° opening)
- Energy saving high efficiency glass windows
- Heat keeping dual door seal system
- Coved, fastener-free, porcelain interior
- Stay cool heavy duty door handle
- Soft Air, two speed, 1/2 hp, fan motor
- 11-position rack guides and 5 plated oven racks
- Solid state temperature controls
- Forced cool down fan mode
- Oven “heat” light cycles with burners
- Interior oven lights
- (1) year limited parts and labor warranty (reference http://www.southbendnc.com/service.html for limited warranty details)

Available Controls

SC-Standard Controls

- 140°F to 500°F solid state thermostat and 60 minute mechanical cook timer.

OPTIONS & ACCESSORIES AT ADDITIONAL COST

❑ List the voltage, frequency, and amps (see utility information). ___VAC, ___Phase, ___Hz

❑ Stainless steel rear jacket

❑ Casters 4” or 6”

❑ Swivel Caster - front with locks

❑ Stainless steel doors

STANDARD CONSTRUCTION SPECIFICATIONS

Exterior Finish: Stainless steel front, top and sides.

Doors: Dependent doors with windows. Low emission glass, stainless steel construction, heavy-duty welded steel frame and 5/8” diameter full-length hinge pin.

Oven Interior: Porcelain enamel finish, coved, fastener free.

Rack and Rack Guides: Heavy-duty removable wire rack guides spaced on 1-5/8” centers offer 11 different rack positions. 5 wire racks provided with each oven.

Blower Fan and Motor: 1/2hp, 2-speed motor, 1710/1120

Oven Heating: Oven heating is regulated by an adjustable solid state thermostat control. Blower fan circulates air within the cavity “scrubbing” heat to the oven interior for even heat distribution within the cavity. Manual reset high limit temperature control protects the oven from overheat condition.

Control Panel: Located on front, at right side of oven, away from heat zone. Slide out panel extends over 17” for easy servicing.

Interior Lights: Two 40 watt high temperature recessed lamps located within the oven cavity.

Legs: 6” stainless steel legs standard.

Electrical System: Terminal connections are accessible from the rear of the oven. These sheath type electrical heating elements located at the rear of the oven function as a single heating unit with a combined rating of 7.5 kW per deck. Available voltages include 208. 240, 380, and 480 VAC single or three phase, 50/60 Hz. Ovens equipped with 480VAC single or three phase heating elements use 240V controls and motors and do not require separate electrical lead wires.

Approval Notes: _____

1100 Old Honeycutt Road, Fuquay-Varina, NC 27526
(919) 762-1000 www.southbendnc.com
Printed in USA Date:_____

Dimensions shown in inches and (millimeters)

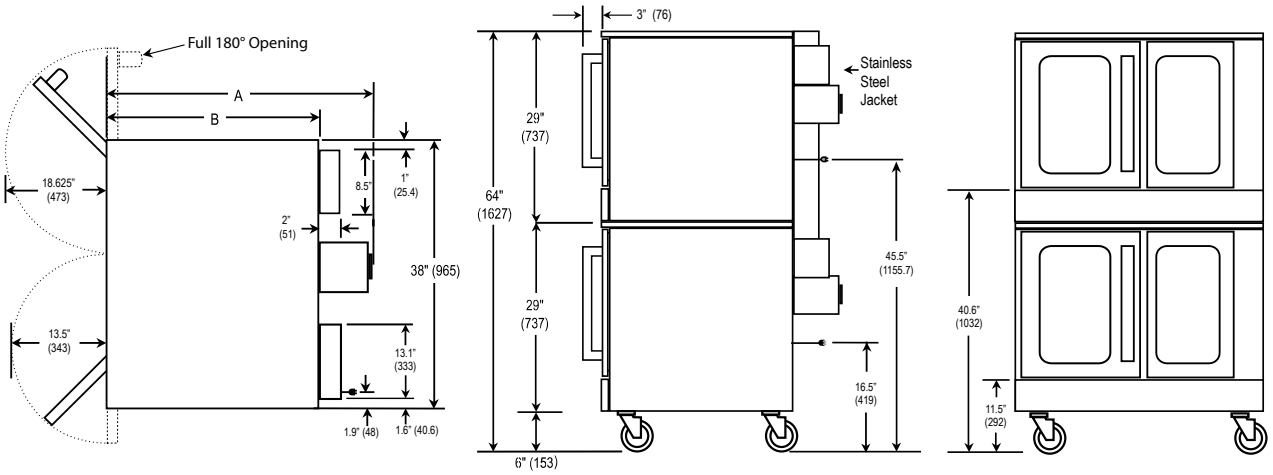

DIMENSIONS

MODEL	Depth		Oven Interior			Rack Clearance		Shipping Crate				
	A	B	Width	Depth	Height	Width	Depth	Width	Depth	Height	Volume	Weight
BES/27	37.25" (946)	30.25" (768)	29" (737)	21.50" (546)	20" (508)	28.25" (718)	21" (533)	57.50" (1461)	45.5" (1156)	81.5" (2070)	123.4 cu. ft. (3.49 cu. m.)	1040 lbs (471.7 kg.)

Dimensions shown in inches and (millimeters)

UTILITY INFORMATION

Standard: 1/2 horsepower, 2 speed motor, 1710/1120 r. p. m.

Electrical Data		Amps per Line				
Each Oven	Voltage	1 Phase	3 Phase			
			X	Y	Z	Neut.
8.5 kW Heating Elements and Controls (7.5 kW for Heating Elements, 1 kW for Controls)	208 VAC, 60Hz	41	25	21	25	0
	220/240 VAC, 50Hz	33	21	17	21	0
	240 VAC, 60Hz	36	22	18	22	0
	380/220 VAC, 50Hz	23	12	12	16	4
	415/240 VAC, 50Hz	36	11	11	15	4
	480 VAC, 60Hz	18	12	9	12	0

** Electric units available for single or three phase operation and must be specified upon ordering.*

MISCELLANEOUS

- Clearances from combustibles: Top, bottom, right, left side -0".
- Recommended - install under vented hood.
- Check local codes for fire and sanitary regulations.

NOTICE:

Southbend has a policy of continuous product research and improvement. We reserve the right to change specifications and product design without notice. Such revisions do not entitle the buyer to corresponding changes, improvements, additions or replacements for previously purchased equipment.

INTENDED FOR COMMERCIAL USE ONLY.
NOT FOR HOUSEHOLD USE.

1100 Old Honeycutt Road, Fuquay-Varina, NC 27526
(919) 762-1000 www.southbendnc.com

U0023

Job_____ Item No._____

Over 90 Years Of Quality Foodservice Products And Service

Universal Ventless Hood

MODEL ❑ WVU-96

Model WVU-96 (equipment sold separately)

DESCRIPTION

Wells Universal hoods are Certified Type-1 compliant, UL710B approved recirculation hood systems and feature completely self-contained air filtration and fire-suppression systems. They do not require venting outside making it possible to cook in non-traditional locations or when traditional Type-1 hoods and duct-work are impractical, restricted or too expensive. Operators can mix and match various electric cooking equipment under the hood such as fryers, ovens, griddles, steamers and more - providing greater flexibility and through-put.

SPECIFICATIONS

Fire Protection – Completely self contained ANSUL® R-102 system includes ANSUL® tank, nitrogen cartridge, ANSUL® sopanifier, piping, heat sensors, ANSUL® drops, nozzles, and movable manual pull station. Manual pull can be relocated to the egress position or an additional station can be added by an authorized ANSUL® representative. Front access for easy fire system maintenance. Fire protection system meets NFPA 96 Chapter 13. Fire protection system must be charged and certified by ANSUL® Authorized distributor after installation and before first use (operator's responsibility).

Filtration – Completely self-contained filtration process reduces emissions below that allowed in NFPA 96 and ANSI UL710B using the EPA 202 test method and includes stainless steel grease baffle filter with grease cup, fiberglass pre-filters, HEPA (High-Efficiency Particulate Air) filter/ carbon-charcoal filter pack. All filters are easily removable with out tools. Air flow sensors continually monitor air flow optimizing performance and grease removal while an interlock system will not allow cooking appliances to function if filters are missing, clogged or in the event of a fire.

Cooking Appliances – Only electrically heated appliances are acceptable for installation. Cooking equipment is optional from Wells or other manufacturers. Appliances must be installed as per manufacturers instructions and controlled thru the hood equipment shut-off interface through a customer supplied contractor which will disable cooking equipment in the event of fire or hood malfunction. For size, temperature and KW limits see back page or manual.

Exhaust and Air Flow – Exhaust air may be horizontal or vertical. Hoods are shipped for horizontal discharge and are field convertible for vertical discharge. Typical airflow is 3,000 CFM. A minimum of 1,600 cubic feet of fresh air per minute is recommended both in and out of the cooking area to ensure the dilution of cooking aromas.

STANDARD FEATURES

❑ Completely self-contained, 4-stage filtration system
❑ Completely self-contained fire protection system
❑ Interlock system will disable cooking appliances if filters are missing, clogged or in the event of a fire
❑ Airflow sensors continually monitor airflow for optimizing performance and grease removal
❑ Illuminated early-warning system to monitor filter replacement
❑ Completely self-contained filtration process reduces emissions below that allowed in NFPA 96 and ANSI UL710B using the EPA 202 test method
❑ Six LED lights producing 495 lumens each for improved visibility - light color temperature (cool white): 6000K
❑ Stainless steel construction for strength, durability and ease of cleaning
❑ Fits through a 36" wide door opening
❑ 6" to 8" adjustable legs (adjustable by 2" for leveling)
❑ Universal systems are movable making them ideal for leased properties
❑ Available in 208/240V, 1Ø
❑ **Limited one-year parts and one year labor warranty**

❑ Pre-filters
❑ HEPA / carbon-charcoal filter packs

NSF/ANSI 2

UL710B

UL710B CATEGORY YZCT
RECIRCULATING SYSTEM
FILE NO. MH48408

Wells Manufacturing
265 Hobson Street, Smithville, Tennessee 37166 | U.S.A. Phone : (800) 264-7827 | wells-mfg.com | Printed in the U.S.A.

NOTE: Specifications are subject to change without notice and are not intended for installation purposes. See installation instructions prior to installing the unit.

GENERAL LAYOUT DATA
SANITATION

MODEL WVU –96 UNIVERSAL VENTLESS HOOD SYSTEM

VOLTAGE AC 60 HZ	AMPS 1 PH.	HORSE POWER	TYPICAL AIRFLOW	MAX. GREASE EMMISSIONS	CLEARANCES TO COMBUSTIBLES
208/240	8.0	1.5	3000 CFM	.0024 LB/HR/FT	SEE DRAWING

UNDER HOOD LED LIGHTING
3000 LUMENS

NSF/ANSI 2 UL710B

UL CAT. YZCT RECIRCULATING SYSTEM FILE NO. MH48408

SPECIAL ENVIRONMENTAL NOTICE: THE HOOD SYSTEM IS DESIGNED TO REDUCE EMISSIONS BUT WILL NOT COMPLETELY ELIMINATE COOKING AROMAS. AIR EXCHANGE AT THE INSTALLATION SITE MUST COMPLY WITH REQUIREMENTS OF THE LOCAL JURISDICTIONAL AUTHORITY. A MINIMUM OF 1600 CUBIC FEET OF FRESH AIR PER MINUTE INTO THE AREA IS RECOMMENDED TO ENSURE ADEQUATE DILUTION.

HOOD SYSTEM INSTALLATION – STAND MOUNT – REGARDLESS OF EQUIPMENT UNDER HOOD.

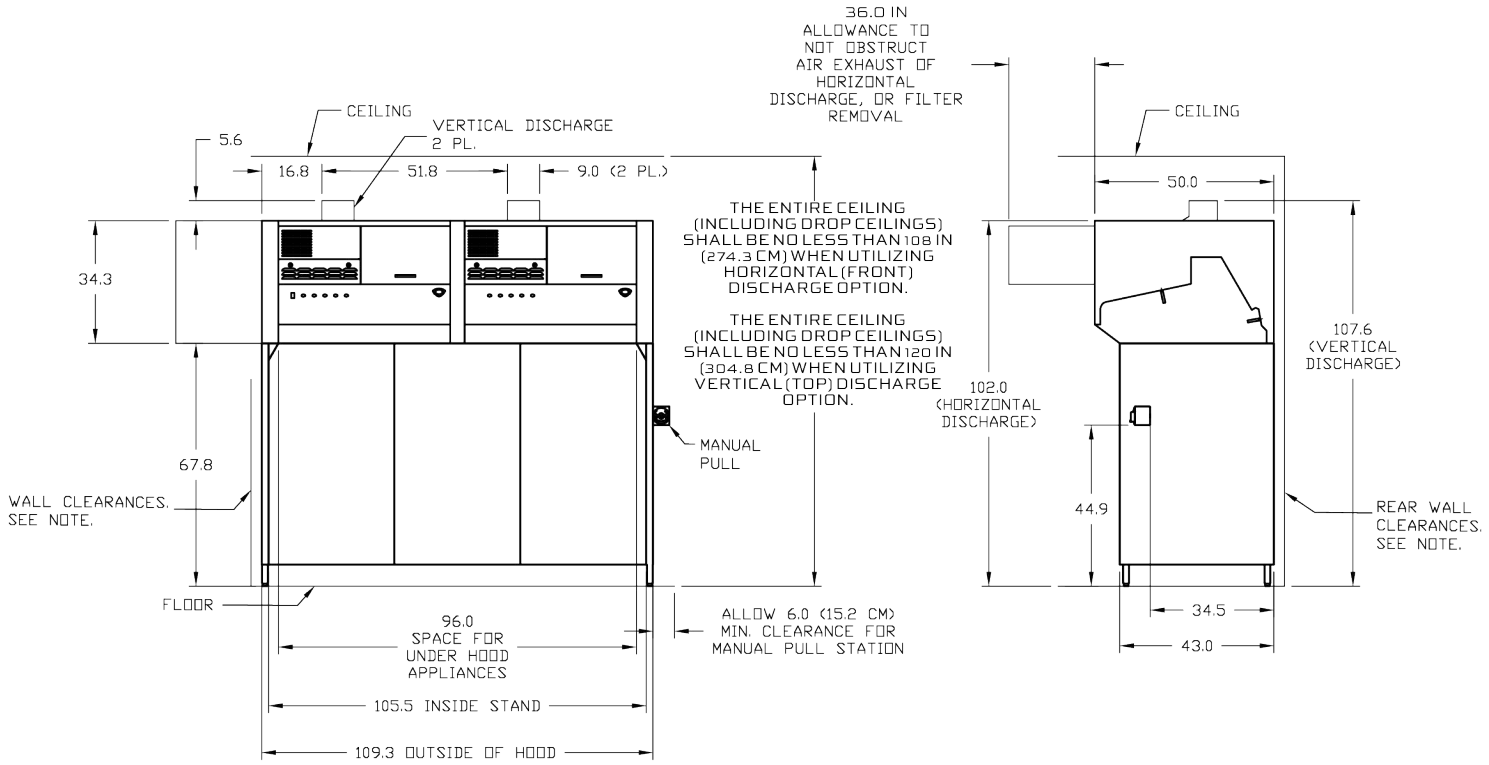

NOTE(S).

1. WALL CLEARANCES. REFERENCE NFPA 96, CLAUSE 4.2.1. AT LEAST 18 IN. (457 MM) TO COMBUSTIBLE MATERIALS, 3 IN. (76 MM) TO LIMITED-COMBUSTIBLE MATERIALS, AND 0 IN. (0MM) TO NONCOMBUSTIBLE MATERIAL.

SK2965 REV A (08-22)

Table: Weights and Shipping Information

Weights				Carton Dimensions						Crate Size	
Shipping Weight		Installed Weight		Width		Depth		Height			
Pounds	kg	Pounds	kg	Inches	mm	Inches	mm	Inches	mm	Cubic Feet	Cubic Meters
2004	911	1366	531	120	3048	60	1524	73.5	1869	306	8.65

THE HOOD AND ALL UNDER HOOD APPLIANCES MUST BE INSTALLED IN ACCORDANCE WITH THE STANDARD FOR VENTILATION CONTROL AND FIRE PROTECTION OF COMMERCIAL COOKING OPERATIONS NFPA 96, THE NATIONAL ELECTRIC CODE NFPA 70 AND ALL LOCAL CODES WHERE APPLICABLE. ALL UNDER HOOD APPLIANCES MUST BE INSTALLED AS PER MANUFACTURER INSTRUCTIONS AND CONTROLLED BY THE HOOD EQUIPMENT SHUTOFF INTERFACE THROUGH A CUSTOMER SUPPLIED CONTACTOR. SEE THE INSTRUCTION MANUAL FOR INTERFACE CONNECTION OPTIONS. APPLIANCES MUST MEET EQUIPMENT PARAMETERS DESCRIBED ABOVE. ONLY ELECTRICALLY HEATED APPLIANCES ARE ACCEPTABLE FOR INSTALLATION. PRIOR TO OPERATION THE FIRE SUPPRESSION SYSTEM MUST BE CHARGED AND CERTIFIED BY AN ANSUL® AUTHORIZED DISTRIBUTOR. ADEQUATE SIDE CLEARANCE MUST BE PROVIDED FOR SUPPLY CONNECTION AND SUPPRESSION MANUAL PULL ACCESS. EXHAUST IS SHIPPED FOR HORIZONTAL DISCHARGE AND FIELD CONVERTIBLE FOR VERTICAL DISCHARGE.

WELLS MANUFACTURING
265 HOBSON STREET
SMITHVILLE, TN 37166, USA

NOTE: SPECIFICATIONS SUBJECT TO CHANGE WITHOUT NOTICE.

GENERAL LAYOUT DATA
SANITATION

MODEL WVU –96 UNIVERSAL VENTLESS HOOD SYSTEM

VOLTAGE AC 60 HZ	AMPS 1 PH.	HORSE POWER	TYPICAL AIRFLOW	MAX. GREASE EMMISSIONS	CLEARANCES TO COMBUSTIBLES
208/240	8.0	1.5	3000 CFM	.0024 LB/HR/FT	SEE DRAWING

UNDER HOOD LED LIGHTING
3000 LUMENS

NSF/ANSI 2 UL710B

UL CAT. YZCT RECIRCULATING SYSTEM FILE NO. MH48408

SPECIAL ENVIRONMENTAL NOTICE: THE HOOD SYSTEM IS DESIGNED TO REDUCE EMISSIONS BUT WILL NOT COMPLETELY ELIMINATE COOKING AROMAS. AIR EXCHANGE AT THE INSTALLATION SITE MUST COMPLY WITH REQUIREMENTS OF THE LOCAL JURISDICTIONAL AUTHORITY. A MINIMUM OF 1600 CUBIC FEET OF FRESH AIR PER MINUTE INTO THE AREA IS RECOMMENDED TO ENSURE ADEQUATE DILUTION.

HOOD SYSTEM INSTALLATION – EQUIPMENT PLACEMENT REQUIREMENTS

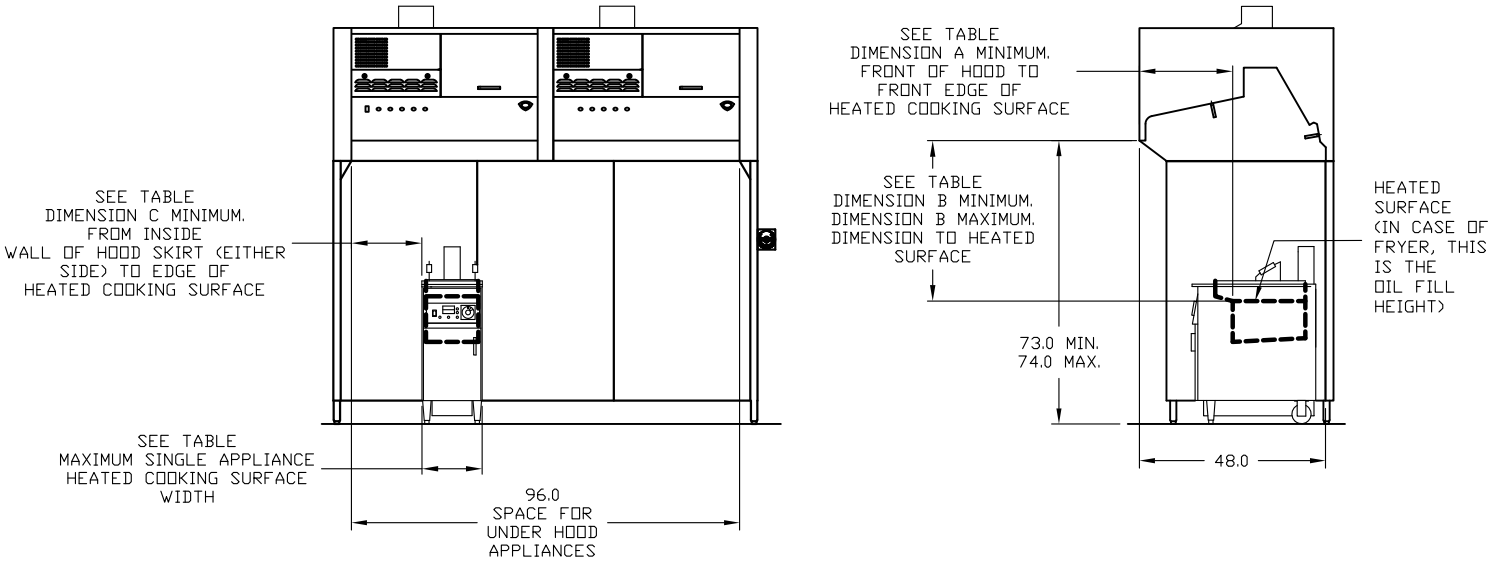

TABLE: APPLIANCE PLACEMENT REQUIREMENTS							
APPLIANCE TYPE	MAXIMUM KW/FT	MAXIMUM COOKING TEMPERATURE (°F)	MAXIMUM SINGLE APPLIANCE HEATED COOKING SURFACE LENGTH (IN.)	DIMENSION A (IN.) MINIMUM	DIMENSION B (IN.) MINIMUM	DIMENSION B (IN.) MAXIMUM	DIMENSION C (IN.) MINIMUM
FRYER	16.9	400	18	24 (EDGE OF OIL)	37	42	0
GRIDDLE	5.5	450	36	21 (EDGE OF HEATED PLATE)	30	37	1
RANGE (2) / HOTPLATE	5.5	NA	48	18 (EDGE OF HEATED PLATEN)	37	42	1
WOK	7.0	NA	48	21 (EDGE OF HEATED SURFACE)	37	42	0
VERTICAL BROILER	7.0	NA	25	20 (EDGE OF HEATED SURFACE)	10	NA	0
OVEN	NA	575	48	6 (EDGE OF FRONT DOOR)	8	NA	0
BRAISING PAN / SKILLET (1)	4.5	550	48	14 (EDGE OF HEATED SURFACE)	37	42	0
CONVECTION OVEN	NA	575	48	6 (FRONT EDGE OF DOOR)	8	NA	0
STEAMER / COMBI OVEN	NA	575	48	6 (TOP EDGE OF DOOR)	20	NA	0
STEAM JACKETED KETTLE	16.9	450	48	14 (EDGE OF HEATED SURFACE)	30	42	0
SANDWICH GRILL (1)	4.5	550	36	18 (EDGE OF HEATED PLATEN)	30	42	0
CONVEYOR OVEN	4.5	NA	23	6 (EDGE OF HEATED SURFACE)	20	42	0

(1) LID OF THE APPLIANCE MUST NOT INTERFERE WITH SUPPRESSION NOZZLE DISCHARGE PATTERN.
(2) PLUS OVEN KW IF AVAILABLE
Special Instruction: Any Oven or Combi with a vertical exhaust will need to have a diverter or diffuser to redirect away from thermal detectors.
* Charbroilers and Smokers are not allowed under Wells ventless

THE HOOD AND ALL UNDER HOOD APPLIANCES MUST BE INSTALLED IN ACCORDANCE WITH THE STANDARD FOR VENTILATION CONTROL AND FIRE PROTECTION OF COMMERCIAL COOKING OPERATIONS NFPA 96, THE NATIONAL ELECTRIC CODE NFPA 70 AND ALL LOCAL CODES WHERE APPLICABLE. ALL UNDER HOOD APPLIANCES MUST BE INSTALLED AS PER MANUFACTURER INSTRUCTIONS AND CONTROLLED BY THE HOOD EQUIPMENT SHUTOFF INTERFACE THROUGH A CUSTOMER SUPPLIED CONTACTOR. SEE THE INSTRUCTION MANUAL FOR INTERFACE CONNECTION OPTIONS. APPLIANCES MUST MEET EQUIPMENT PARAMETERS DESCRIBED ABOVE. ONLY ELECTRICALLY HEATED APPLIANCES ARE ACCEPTABLE FOR INSTALLATION. PRIOR TO OPERATION THE FIRE SUPPRESSION SYSTEM MUST BE CHARGED AND CERTIFIED BY AN ANSUL® AUTHORIZED DISTRIBUTOR. ADEQUATE SIDE CLEARANCE MUST BE PROVIDED FOR SUPPLY CONNECTION AND SUPPRESSION MANUAL PULL ACCESS. EXHAUST IS SHIPPED FOR HORIZONTAL DISCHARGE AND FIELD CONVERTIBLE FOR VERTICAL DISCHARGE.

WELLS MANUFACTURING
265 HOBSON STREET
SMITHVILLE, TN 37166 USA

NOTE: SPECIFICATIONS SUBJECT TO CHANGE WITHOUT NOTICE.