PREPARE SITE FOR CHOICE DINING

ROBERT J. DOLE VAMC WICHITA BUILDING 2

5500 E KELLOGG AVE
WICHITA, KS 67218

VA Project #589A7-23-305
Alesia Architecture Project #167218001

EQUIPMENT CUTSHEETS LIST

EQPM CODE	DESCRIPTION	MANUFACTURER
R0002	Prep Table, Stainless Steel	Regency
R0003	Combi Oven SCC - Double Stacked	Southbend
R0006	Griddle - Gas Countertop with Manual Controls and 2 Drawer Refrigerated Chef Base	VULCAN
R0007	Combi Oven	CONVOTHERM
R0008	Combi Oven	Alto-Shaam
R0009	3-DOOR FRIDGE	TRAULSEN
R0010	Freezer - Glass Door Reach-In	Beverage-Air
R0012	Single Compartment Stainless Steel Sink	-
R0014	Blender	Avamix
R0015	12" Manual Gravity Feed Meat Slicer	HOBART
R0017	Super Adjustable Chrome 4 Tier Mobile Shelving Unit with Rubber Casters - 24" x 48" x 69"	Metro
R0018	20 Pan End Load Nesting Bun/Sheet Pan Rack	Regency
R0021	Legacy Tabletop mixer with a 12 quart capacity stainless steel bowl.	HOBART
R0022	Smart Therm Induction Charger	DINEX
R0024	Work Table	Elkay SSP, LLC
R0025	3424-88 Three Shelf Utility Cart	Rubbermaid Commercial Products
R0026	Work Table	Elkay SSP, LLC
R0027	Dispenser, Paper Towel, Sensor, Hands Free	BRADLEY CORPORATION
R0029	NG-300 Coffee System	Folgers
R0030	High Speed Oven	MERRYCHEF
R0031	Prep Table, Stainless Steel	Regency
R0032	Prep Table, Stainless Steel	Regency
R0033	Prep Table, Stainless Steel	Regency
R0034	Equipment Stand, stainless steel	Regency
U0001	THREE PAN OPEN WELL ELECTRIC STEAM TABLE	Eagle Group
U0002	Prep Table, Stainless Steel	Regency
U0002A	Double Deck Overshelf 18" x 72" - SS	Regency
U0003	Sandwich Prep Table	Atosa
U0004	Stainless Steel Wall Mounted Hand Sink with Foot Pedal Faucet	Eagle Group
U0005	Commercial Gas Range and 2 Standard Ovens	Southbend
U0006	18 Gauge Stainless Steel 12" x 48" Solid Wall Shelf	REGENCY
U0007	Strip Warmer with Toggle Controls	HATCO
U0009	Prep Table, Stainless Steel	Regency
U0010	Refrigerator with Worktop	True
U0011	Double Deck Overshelf 18" x 48"	Regency
42		

ALESIA ARCHITECTURE
Alesia Architecture P.C.
3705 North 200th Street
Elkhorn, Nebraska 68022
Phone: (402) 291-6941

Bakers Mixer/Slicer/Blender table
L 60" X W 30" X H 28"
North Wall

R0034

FSW Table w/Coffee Maker
L 72" X W 24" X H 35"
West Wall

R0002

R0032

Cooks Table with Drawer
L 36" X W 30" X H 35"
East wall Between ovens under the hood

Merrychef

R0031

Cooks Can opener table
L 41" X W 36" X H 35"
East wall between ovens under the hood

Double Stack
Southbend Oven

R0003

PARTS MANUAL

G, SL & B-Series

GAS CONVECTION OVENS

G-Series Models

GS/15SC
GS/15CCH
GS/25SC
GS/25CCH
GB/15SC
GB/15CCH
GB/25SC
GB/25CCH

SL-Series Models

SLGS/12SC
SLGS/12CCH
SLGS/22SC
SLGS/22CCH
SLGB/12SC
SLGB/12CCH
SLGB/22SC
SLGB/22CCH
SLGS/19SC
SLGS/19CCH
SLGS/29SC
SLGS/29CCH
SLGB/19SC
SLGB/19CCH
SLGB/29SC
SLGB/29CCH

B-Series Models

BGS/12SC
BGS/22SC

Model GS/15SC

GB/25SC

Model SLGS/12SC

1100 Old Honeycutt Road, Fuquay-Varina, NC 27526
www.southbendnc.com

Copyright © 2014 by Southbend. All rights reserved. Published in the United States of America.

MANUAL 1198300 REV 4 (10/14)
ECN – 14-150

FULL SIZE
GAS CONVECTION OVENS

Replacement parts may be ordered either through a Southbend Authorized Parts Distributor or a Southbend Authorized Service Agency. It is recommended to verify part numbers with a Southbend Authorized Parts Supplier or the Southbend Parts/Service Dept. prior to ordering parts.

When ordering parts, you will need to supply the Model Number, Serial Number, Part Number, Description, Finish, and Electrical Characteristics as applicable to the unit.

The serial plate is located on the interior side of the lower front panel, as shown below.

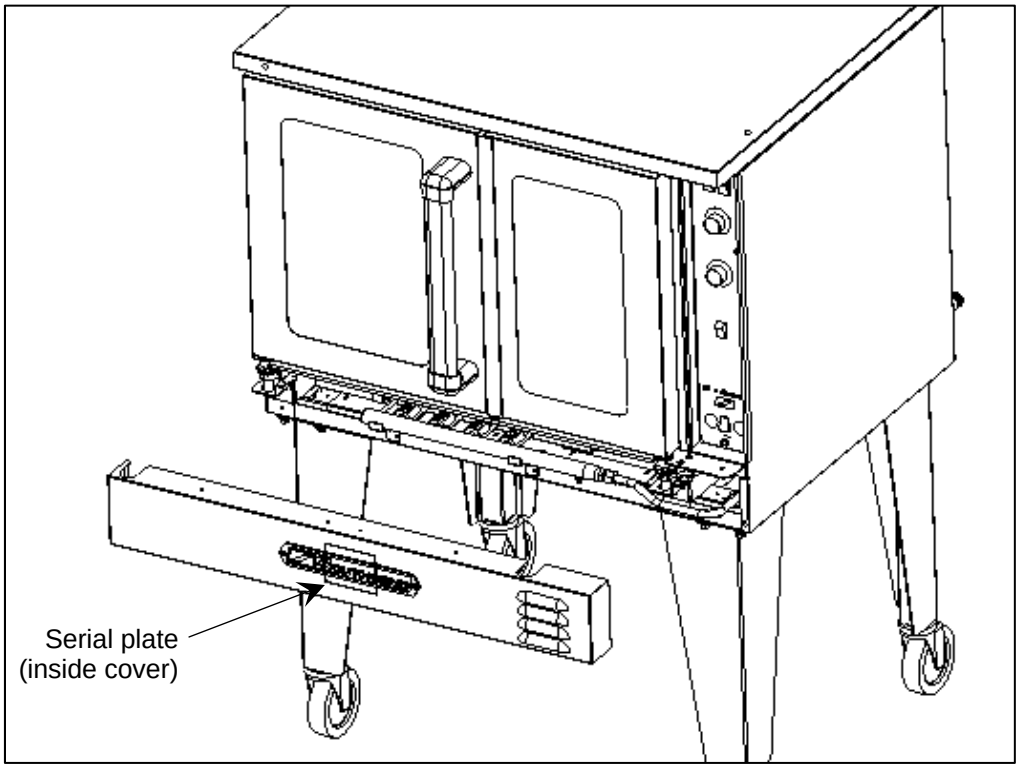

ELECTRICITY SUPPLY

Convection ovens require connection to a supply of electricity. The appliance, when serviced, must be electrically grounded in accordance with local codes, or in the absence of local codes, with the *National Electrical Code, ANSI/NFPA 70,* or the *Canadian Electrical Code, CSA C22.2,* as applicable. An electrical diagram is located on the side of the control panel assembly in each unit. (see drawing on page 5).

Power Option	Power Type	# of Ovens	Maximum Amps
120/60/1	120 Volts, 60 Hz, Single Phase	Single-Deck	7.9
		Double-Deck	15.8
208/60/1or3	190-219 Volts, 60 Hz, Single or Three Phase	Single-Deck	4.3
		Double-Deck	8.6
240/60/1or3	220-240 Volts, 60 Hz, Single or Three Phase	Single-Deck	3.8
		Double-Deck	7.5
240/50/1or3	208-240 Volts, 50 Hz, Single or Three Phase	Single-Deck	6.0
		Double-Deck	12.0

Ovens ordered with the 120V power option are equipped with one or two power cords with a standard 120V single-phase plug with a ground prong. Single-deck ovens will have one power cord; double-deck ovens will have two.

Ovens with other power options have a terminal block on the rear of the oven that must be wired to the power supply. Depending on how the power supply is connected to the terminal block, the oven can operate on either single-phase of three-phase power.

GAS SUPPLY

The serial plate is located inside the lower front panel. It indicates the type of gas the unit is equipped to burn. All Southbend equipment is adjusted at the factory. Check type of gas on serial plate.

These models are design-certified for operation on natural or propane gases. For natural gas, the regulator is set to deliver a 4.0" W.C. pressure to the manifold. For propane gas, it is set to deliver 11" W.C.

If applicable, the vent line from the gas appliance pressure regulator shall be installed to the outdoors in accordance with local codes, or in the absence of local codes, with the *National Fuel Gas Code, ANSI Z223.1, Natural Gas Installation Code, CAN/CGA-B149.1,* or the *Propane Installation Code CAN/CGA-B149.2,* as applicable.

This appliance should be connected ONLY to the type of gas for which it is equipped.

A 3/4" NPT line is provided at the rear for the gas connection. An adequate gas supply is imperative. Undersized or low pressure lines will restrict the volume of gas required for satisfactory performance. Fluctuations of more than 25% on natural gas or 10% on propane gas will create problems and affect burner operating characteristics.

An adequate gas supply line to the unit should be no smaller than the inside diameter of the pipe from the unit to which it is connected.

Purge the supply line to clean out dust, dirt, or other foreign matter before connecting the line to the unit.

All pipe joints and connections must be tested thoroughly for gas leaks. Use only soapy water for testing on all gases. NEVER use an open flame to check for gas leaks. All connections must be checked for leaks after the unit has been put into operation. Test pressure should not exceed 1/4" W.C.

Reference chart for unit specific gas type properties:

Model Number	# of Ovens	Total BTU	Type of Gas	Orifice Size
BGS/12…	Single-Deck	54,000	Propane	56
			Natural Gas	47
BGS/22…	Double-Deck	108,000	Propane	56
			Natural Gas	47
SLGS/12… SLGB/12…	Single-Deck	72,000	Propane	56
			Natural Gas	47
SLGS/22… SLGB/22…	Double-Deck	144,000	Propane	56
			Natural Gas	47
GS/15… GB/15…	Single-Deck	90,000	Propane	56
			Natural Gas	47
GS/25… GB/25…	Double-Deck	180,000	Propane	56
			Natural Gas	47

CONTROL PANEL ACCESS AND SHUT-OFF SWITCH

To access the control panel components, remove the two thumbs screws at the top and bottom of the control panel and slide the control panel out (see 1ST picture). A wiring diagram for the oven is located on the side of the control panel assembly. **When the control panel is slid out, all power to the control panel is cut off by a shut down switch that is located directly inside the opening and below the control panel** (see 2ND picture). To re-energize the controls for troubleshooting, pull the plunger on the shut down switch up.

To fully remove Control Panel, disconnect temp probe wires and harness connectors prior to pulling up on slide release levers and removing.

Accessing Control Panel Components

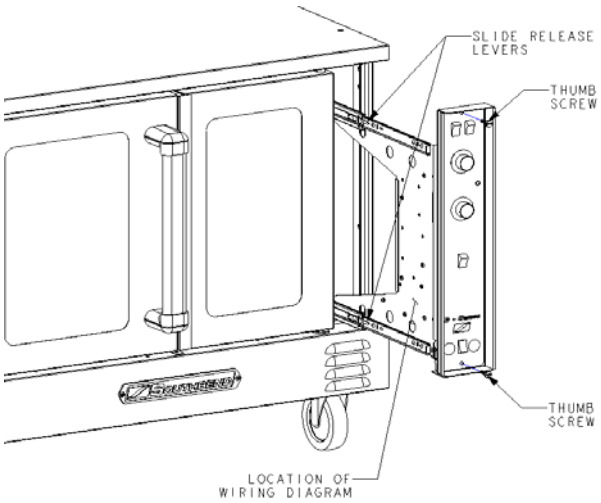

Accessing Control Panel Components

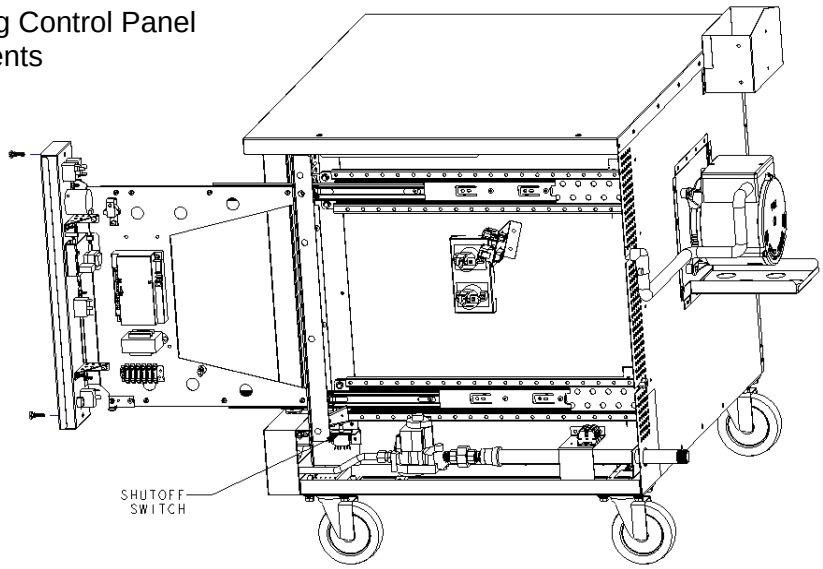

PARTS

NOTICE

INSTALLATION OF OTHER THAN GENUINE SOUTHBEND PARTS WILL VOID THE WARRANTY ON THIS EQUIPMENT.

The serial plate with voltage, model, and serial information is located inside the lower front panel of the oven.

Replacement parts may be ordered either through a Southbend Authorized Parts Distributor or a Southbend Authorized Service Agency. It is recommended to verify part numbers with a Southbend Authorized Parts Supplier or the Southbend Parts/Service Dept. prior to ordering parts.

When ordering parts, you will need to supply the Model Number, Serial Number, Part Number, Description, Finish, and Electrical Characteristics as applicable to the unit.

For parts not listed, contact a Southbend Authorized Parts Distributor or Southbend Authorized Service Agency. You can find an Authorized Parts Distributor or Service Agency in your area by going to www.southbendnc.com/service.html. If this information is not available, contact the Parts/Service Dept. at Southbend to obtain specific part availability and information.

Index of Parts Diagrams

Page Number	Description
7	Front Panel and Flue Parts
8	Door Parts
9	Door Chain Mechanism Parts
10	Control Panel Parts for Models with Standard Controls
12	Control Panel Parts for Models with Cycle/Cook and Hold Controls
14	Internal Gas Supply and Slide Mount Parts
15	Burner Compartment Parts
16	Oven Interior ,Lights and Fan Motor Parts
17	Leg Parts for Single-Deck Models
18	Storage Rack Parts
19	Double-Deck Oven Stacking Parts
20	Leg Parts for Double-Deck Ovens

Front Panel and Flue Parts

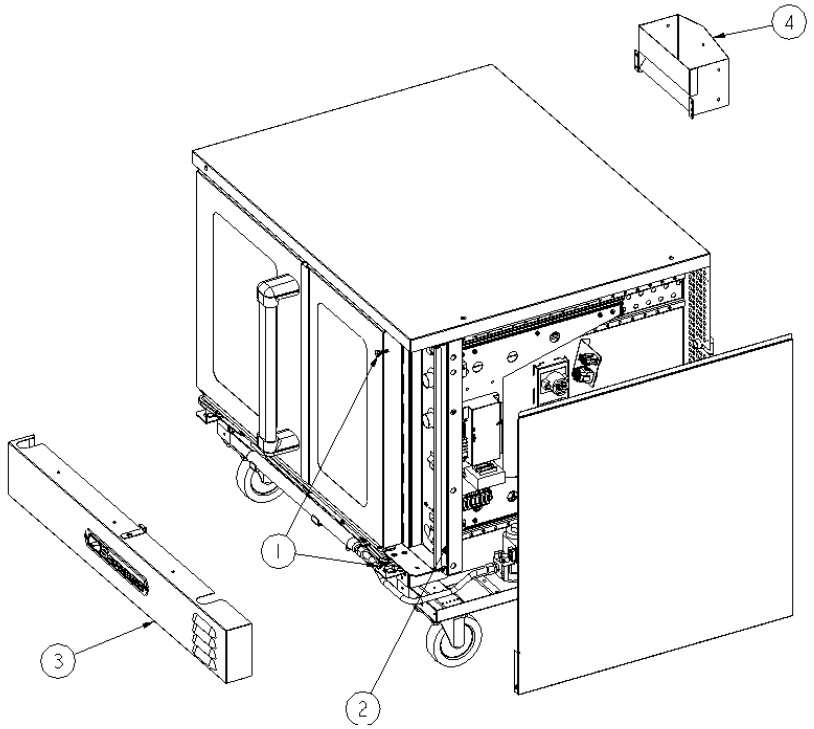

Key	Part Number	Qty	Description
1	1179703	2	Thumbscrew for control panel
2	1197799	1	Control Panel Sealing Plate Assembly
3	1177867	1	Panel, front louver, co
4	1181838	1	Flue box, w/a, co
*	4440502	1	Down draft diverter kit

* not shown on drawing.

Door Parts

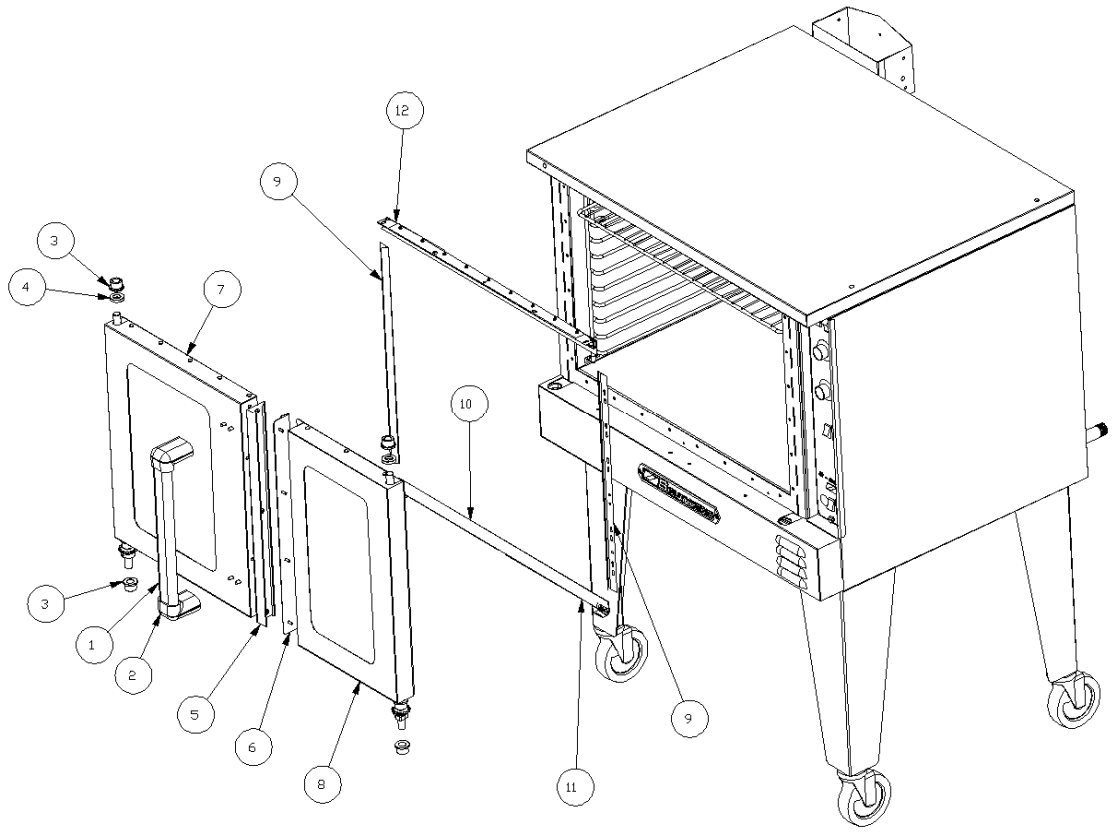

Key	Part Number	Qty	Description
1	1197269	1	Handle (part of left door assembly)
2	1197282	2	End Cap (part of left door assembly)
3	1164527	4	Bushing, bronze
4	1164547	2	Spacer, Door shaft
5	1197537	1	Center door seal, left door
6	1197526	1	Center strike plate, right door
	1197538	1	Center door seal, right door
7	1198056	1	Door assembly, left, window, CO
	1197732	1	Door assembly, left, solid, CO
8	1198057	1	Door assembly, right, window, CO
	1197736	1	Door assembly, right, solid, CO
9	1191438	2	Door seal, left & right, CO
10	1191444	1	Door seal, bottom, metal, CO
11	1197506	1	Door seal assembly, bottom, CO
12	1197502	1	Door seal assembly, top, CO

Door Chain Mechanism Parts

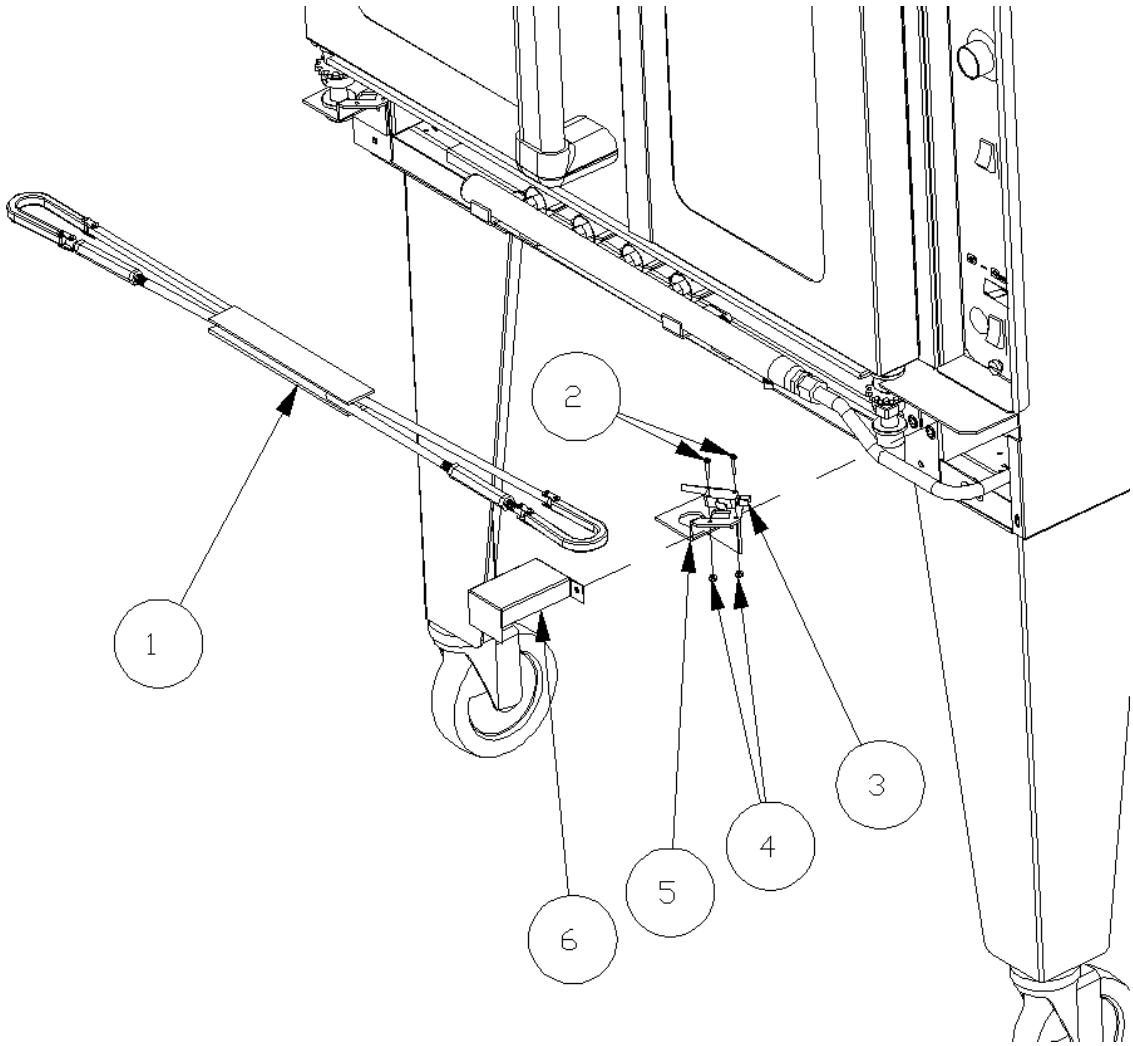

Key	Part Number	Qty	Description
1	1195493	1	Door Chain assembly
2	1172326	2	Screw, #4-40 x 3/4, zinc plated
3	1177567	1	Switch, door, spdt, 15 amp
4	1172327	2	Nut #4-40, zinc plated, hex
5	1199749	2	Bracket, door switch
6	1197886	1	Shield, Switch Cover

Control Panel Parts for Models with Standard Controls (SC Models)

See drawing on following page.

Key	Part Number	Qty	Description
-	1198016	1	Control panel assembly, SC, 60Hz, G-Series, 120V (assembled, w/o wiring harness)
-	1198030	1	Control panel assembly, SC, 60Hz, G-Series, 208/240V (assembled, w/o wiring harness)
-	1198017	1	Control panel assembly, SC, 60Hz, SL-Series, 120V, w/lights (assembled, w/o wiring harness)
-	1198018	1	Control panel assembly, SC, 60Hz, SL-Series, 120V, w/o lights (assembled, w/o wiring harness)
-	1198031	1	Control panel assembly, SC, 60Hz, SL-Series, 208/240V, w/lights (assembled, w/o wiring harness)
-	1198032	1	Control panel assembly, SC, 60Hz, SL-Series, 208/240V, w/o lights (assembled, w/o wiring harness)
-	1198008	1	Control panel assembly, SC, 60Hz, B-Series, 120V, w/lights (assembled, w/o wiring harness)
-	1198009	1	Control panel assembly, SC, 60Hz, B-Series, 120V, w/o lights (assembled, w/o wiring harness)
-	1198019	1	Control panel assembly, SC, 50Hz, SL-Series, 208/240V, w/lights (assembled, w/o wiring harness)
-	1198033	1	Control panel assembly, SC, 50Hz, SL-Series, 208/240V, w/o lights (assembled, w/o wiring harness)
*	1179591	1	Wiring harness, SC, 120V (includes terminal block 1170335)
*	1179592	1	Wiring harness, SC, 208/240V (includes terminal block 1170335)
1	1197782	1	Frame Assembly, Std., Slide
2	1197577	1	Polypanel, G-Series
	1197801	1	Polypanel, SL-Series
	1197802	1	Polypanel, B-Series
3	1177541	1	Power rocker switch-DPST- (on-off)
4	1177540	2	Fan rocker switch-SPDT (on-on)
5	1177565	1	Light, (amber) 24V
	1170350	1	Light, (amber) 240V
6	6600334	2	Screw, 6-32, 3/8, Self-tapping
7	1175670	1	Timer, motorized, 120V, 60Hz
	1176416	1	Timer, motorized, 240V, 60Hz
	1176436	1	Timer, motorized, 240V, 50Hz
8	1175707	1	Buzzer, adjustable, 120VAC
	1175708	1	Buzzer, adjustable, 240VAC
9	1146397	7	Screw 8-32 x 5/8 s/steel pan head
10	2001347	8	Locknut 8-32
11	1181998	1	Temperature control board/analog potentiometer
12	1170337	2	Knob for temperature control bd. and timer
13	1198084	1	Push Mount Wire Tie
14	1146319	2	Screw 6-32 x 1/2 Round hd
15	1175723	1	Ignition Control Module
16	1172277	1	Transformer, 120/208/240-24
17	1170335	1	Terminal block (supplied w/harness)
18	1170336	1	Marker strip
19	1177789	1	Rocker switch-SPST momentary (for models with the oven light option)
	1177642	1	Plug, square (for models without the oven light option)
20	1177564	2	Plug, round (120V models)
	1170424	2	Fuse holder (208/240V models)
21	1170425	2	Fuse, 12 amp #LP-CC-12 low peak (208/240V models only)
*	1181996	1	Temperature probe

* not shown on drawing.

Control Panel Parts for Models with Standard Controls (SC Models)

See parts list on previous page.

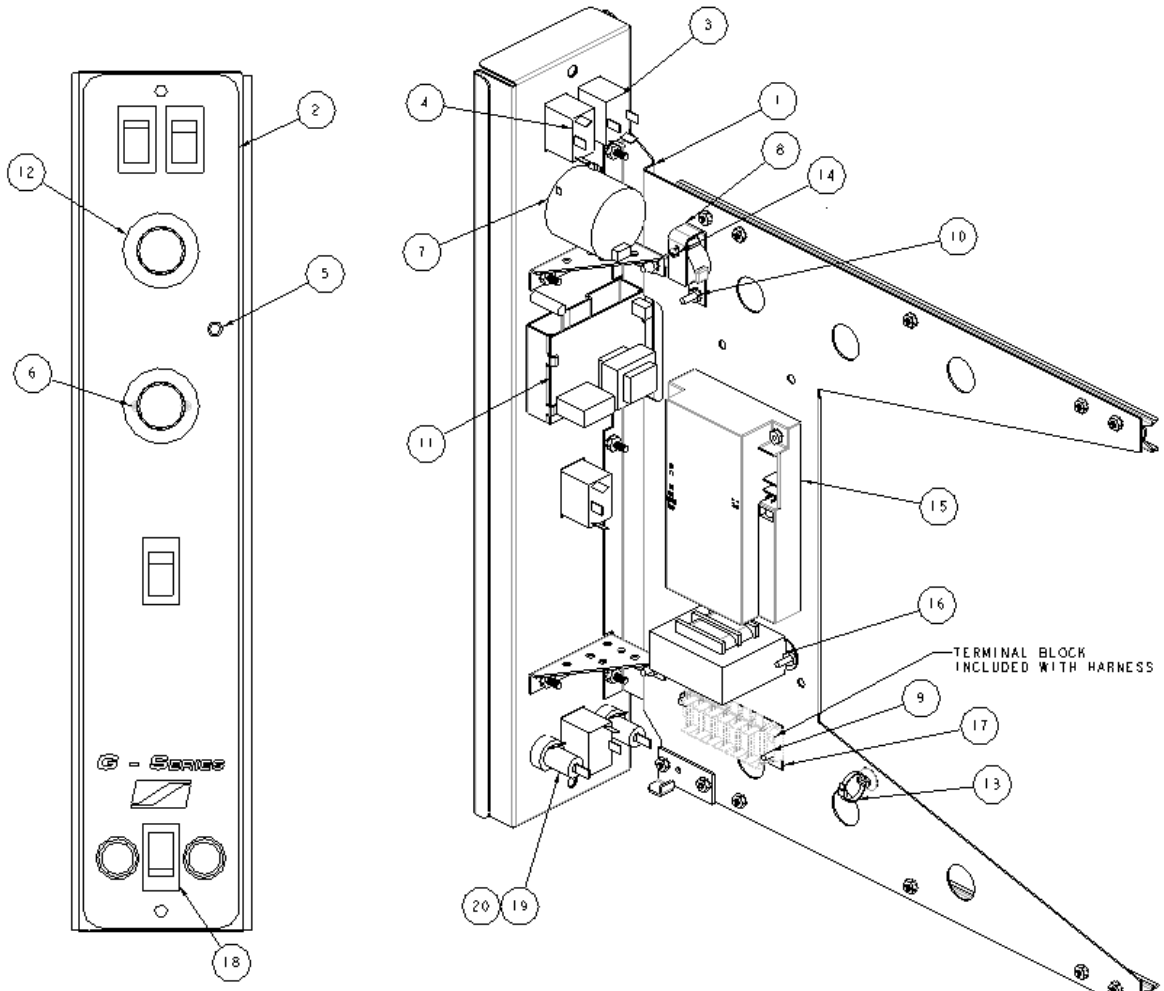

Control Panel Parts for Cycle/Cook and Hold Models (CCH Models)

(G & SL-Series ONLY)

See drawing on following page.

Key	Part Number	Qty	Description
-	1197792	1	Control panel assembly, CCH, 60Hz, G-Series, 120V (assembled, w/o wiring harness)
-	1197795	1	Control panel assembly, CCH, 60Hz, G-Series, 208/240V (assembled, w/o wiring harness)
-	1197793	1	Control panel assembly, CCH, 60Hz, SL-Series, 120V, w/lights (assembled, w/o wiring harness)
-	1197794	1	Control panel assembly, CCH, 60Hz, SL-Series, 120V, w/o lights (assembled, w/o wiring harness)
-	1197796	1	Control panel assembly, CCH, 60Hz, SL-Series, 208/240V, w/lights (assembled, w/o wiring harness)
-	1197797	1	Control panel assembly, CCH, 60Hz, SL-Series, 208/240V, w/o lights (assembled, w/o wiring harness)
*	1180482?	1	Wiring harness, CCH, 120V (includes terminal block 1170335)
*	1180483?	1	Wiring harness, CCH, 208/240V (includes terminal block 1170335)
1	1197783	1	Frame Assy, Slide, CCH
2	1197803	1	Polypanel, CCH, G-Series
	1187804	1	Polypanel, CCH, SL-Series
3	1177541	1	Power rocker switch-DPST- (on-off)
4	1177540	2	Fan rocker switch-SPDT (on-on)
5	1180402	1	Relay, 120V
	1180499	1	Relay, 208/240V
6	2001347	8	Locknut, #8-32
7	1146397	8	Screw, #8-32x5/8 pan head
8	1180404	4	Spacer, control
9	1146400	4	Nut, #6-32 hex
10	1180407	1	Control, CCH
11	1175723	1	Ignition Control Module
12	1172277	1	Transformer, 120/208/240-24V
*	1170335	1	Terminal block
13	1198084	1	Wire Tie, Push mount
14	1170336	1	Marker strip
15	1177789	1	Rocker switch-SPST momentary (for models with the oven light option)
	1177642	1	Plug, square (for models without the oven light option)
16	1177564	2	Plug, round (120V models)
	1170424	2	Fuse holder (208/240V models)
17	1170425	2	Fuse, 12 amp #LP-CC-12 low peak (208/240V models only)
*	1181996	1	Temperature probe

* not shown on drawing.

Control Panel Parts for Cycle/Cook and Hold Models (CCH Models)

See parts list on previous page.

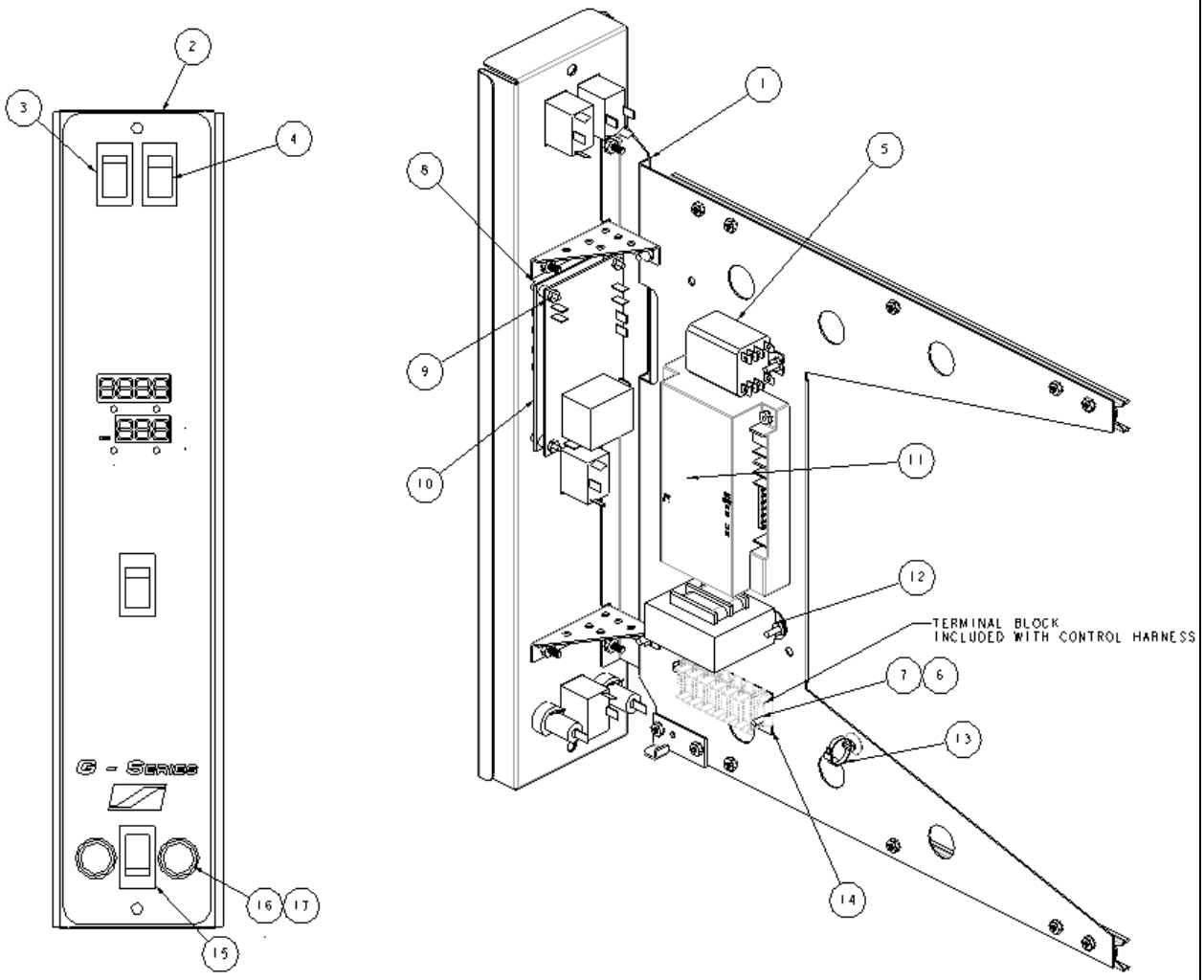

Internal Gas Supply and Slide Mount Parts

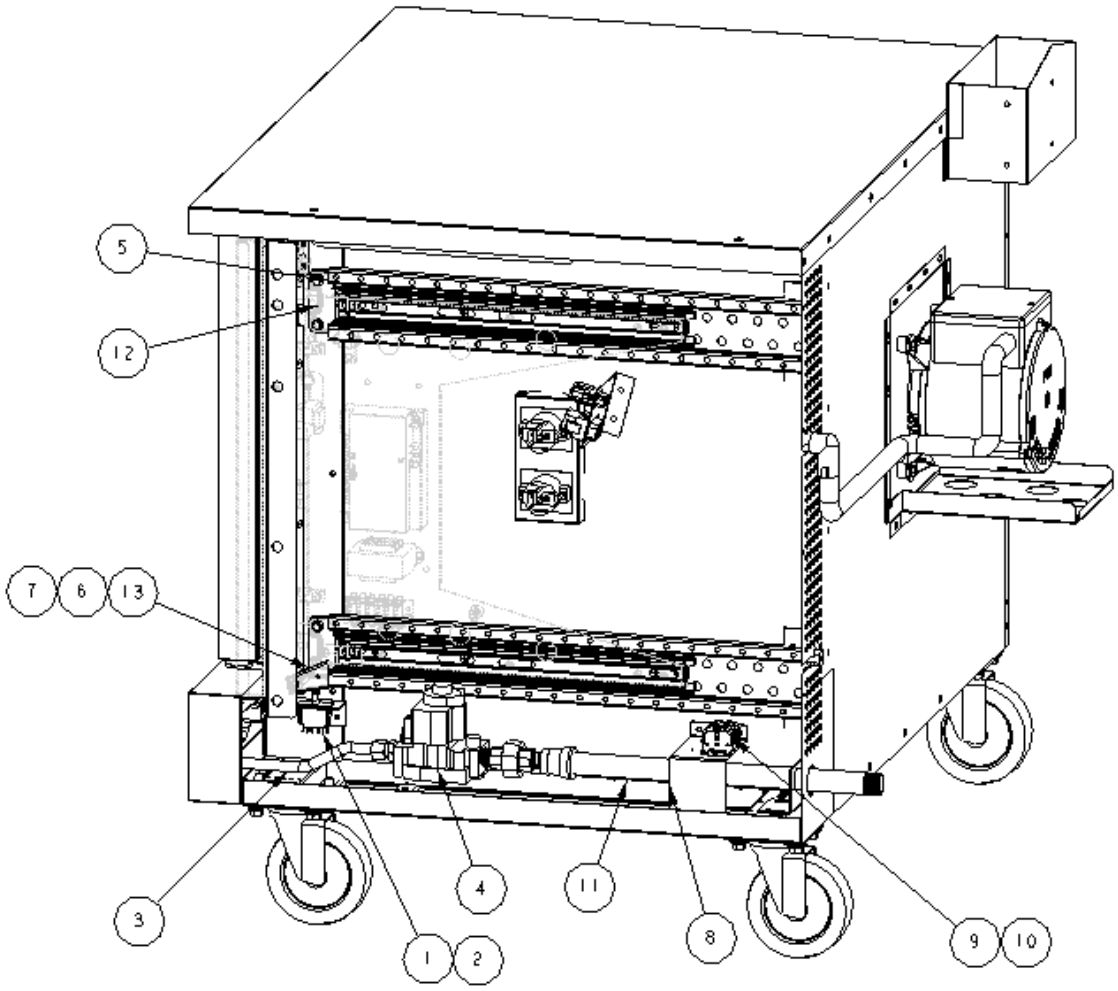

Key	Part Number	Qty	Description
1	1177566	1	Switch, shutdown, SPDT, 15 amp
2	1197586	1	Bracket, shutdown switch mtg.
3	1181934	1	Tube, gas supply, gas, co
4	1175016	1	Valve, nat gas, g-co
	1175375	1	Valve, propane gas, g-co
5	1197805	2	Slide mounting assembly (std depth)
	1197806	2	Slide mounting assembly (bakery depth)
*	1197808	2 PR	Drawer Slide (supplied with Slide mntg. assy)
6	1198006	1	Spacer, Pivot
7	1198004	1	Shoulder Bolt, 5/16 shaft, 1/4-20 thread
8	1197451	1	Plate, Term block mounting
9	PE-023	2	Term block end
10	PE-024	1	Term block end
11	1191871	1	Pipe W/A, gas
12	1197777	2	Shim, Slide Support
13	1197756	1	Closure bracket, S/O Switch

Burner Compartment Parts

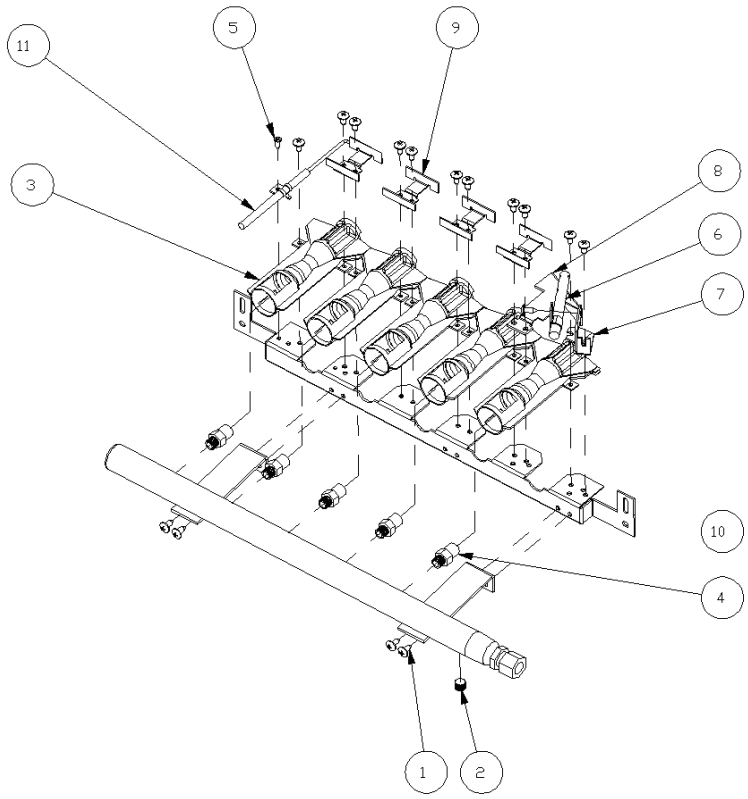

Key	Part Number	Qty	Description
1	1146304	16	Screw, #10x1/2 Phil Truss Head
2	1147014	1	Plug, Pipe, Flush, 1/8”
3	1175143	*	Inshot burner, 2 3/4 center
4	1176032	*	Hood, fitting, orifice, #47, nat
	1195077	*	Hood, fitting, orifice, #56, prop
5	1176839	1	Screw, #8-15 ½ Mod Rd Phil
6	1183200	1	Igniter, Hot Surface
7	1189057	1	Clip, Ignition Alignment
8	1194600	1	Bracket, burner, carry over
9	1194601	**	Deflector, air
10	1194680	1	Burner Assembly, G-Series
	1194604	1	Burner Assembly, SL-Series
	1194681	1	Burner Assembly, B-Series
11	1195448	1	Flame sensor
***	1181934	1	Tube, gas supply. gas, co

* One for each burner:

- **Model GS/15 has 5.**
- **Model GB/15 has 5.**
- **Model SLGS/19 has 5.**
- **Model SLGB/19 has 5.**
- **Model SLGS/12 has 4.**
- **Model SLGB/12 has 4.**
- **Models BGS/12SC has 3.**

** One less than the number of burners.
*** Not Depicted

Oven Interior, Lights and Fan Motor Parts

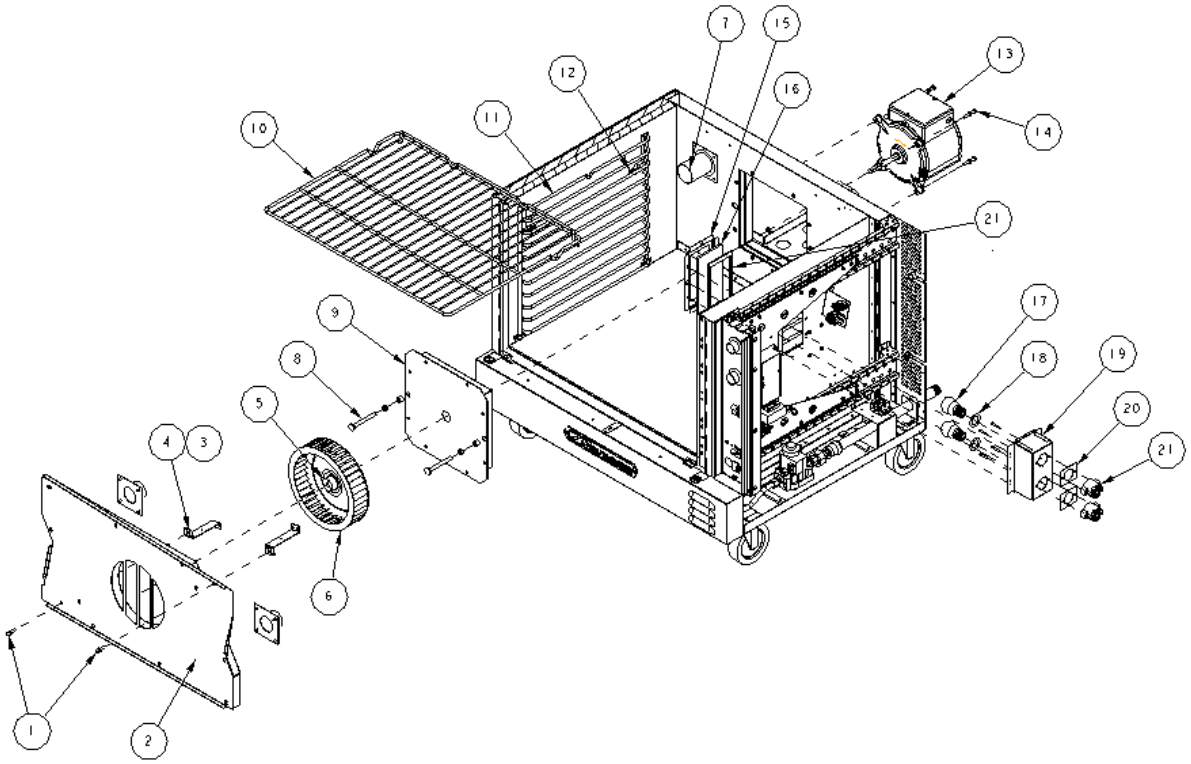

Key	Part Number	Qty	Description
1	1160289	2	Thumb screw 1/4-20 x 3/4
2	1199705	1	Baffle, air. s/a, enamel (Shallow depth)
	1199707	1	Baffle, air. s/a, enamel (Bakery depth)
3	1166819	2	Nut, 1/4 x 20, speed
4	1175572	2	Bracket, baffle, ctg, G-series
5	1179100	1	Puller disk
6	1175196	1	Blower wheel single with puller disk
7	1199542	2	Tube asm. outer combustion
8	1175146	2	Bolt, carriage, 3/8 x 3.5", ss
9	1175695	1	Pocket weld asm. blower motor
10	1189821	5	Rack, oven, shallow, mg
	1189860	5	Rack, oven, bakery. mg
11	1189820	2	Rack guide, 11 pos, shallow
	1189822	2	Rack guide, 11 pos, bakery
12	6660	8	Clip, side rack support
13	1194780	1	Motor, 2sp, 120V, 50/60 cycle
	1194781	1	Motor, 2sp, 240V, 50/60 cycle
14	1146264	4	Bolt, 1/4-20 x 2
15	1197728	1	Retainer, glass, co
16	1181807	1	Glass, bulb cover, co
17	1160009	2	Bulb, oven light, 40 watt, clear
18	P6497	2	Gasket, Teflon, white
19	1181805	1	Light box, CO
20	1160032	2	Gasket, light socket, .062 ga
21	1197730	1	Seal, Light Box

Leg Parts for Single-Deck Models

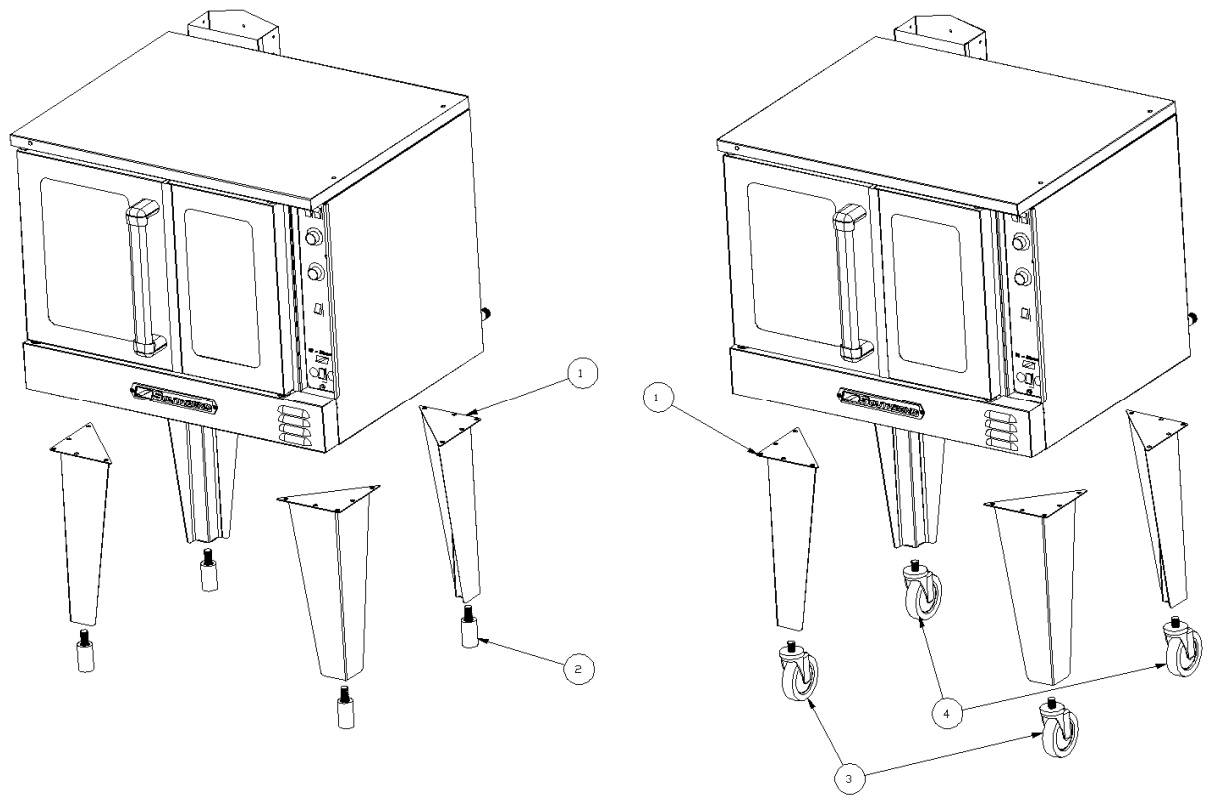

Key	Part Number	Qty	Description
1	1184005	4	Single deck leg (for legs with feet or casters)
2	1174266	4	Adjustable foot for leg
*	1173584	4	Flanged foot (optional replacement for adjustable foot 1174266)
3	1174264	2	Caster with brake
4	1174263	2	Caster without brake
*	1174265	1	Set of four casters (two with brake, two without brake)
*	1146213	20	3/8 x 16 x 1 hex head bolt
*	1146513	20	3/8 lock washer
*	1146522	20	3/8 flat washer

* not shown on drawing.

Storage Rack Parts

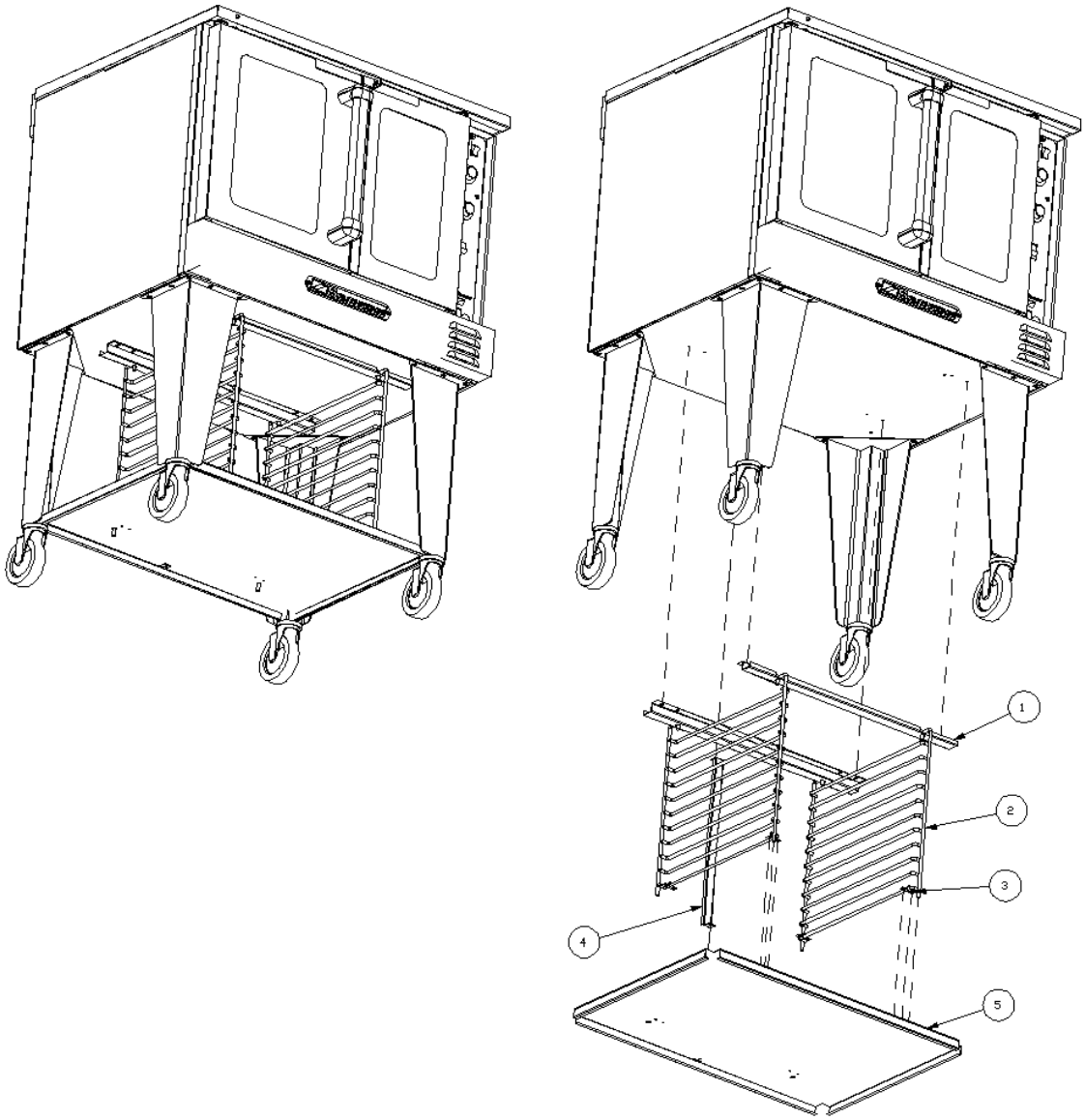

Key	Part Number	Qty	Description
-	1184044	1	Cooling pan kit, with shelf, bakery depth
-	1184046	1	Cooling pan kit, with shelf, shallow depth
1	1184022	2	Rack hanger, G/E ser co
2	1175438	2	Rack guide, 11 pos. shallow
	1175439	2	Rack guide, 11 pos. bakery
3	6660	8	Clip, side rack support
4	1184025	1	Stop channel
5	1184019	1	Shelf, open rack, shallow
	1184023	1	Shelf, open rack, bakery
*	1146304	18	10 x 1/2 Phillips screw

* not shown on drawing.

Double-Deck Oven Stacking Parts

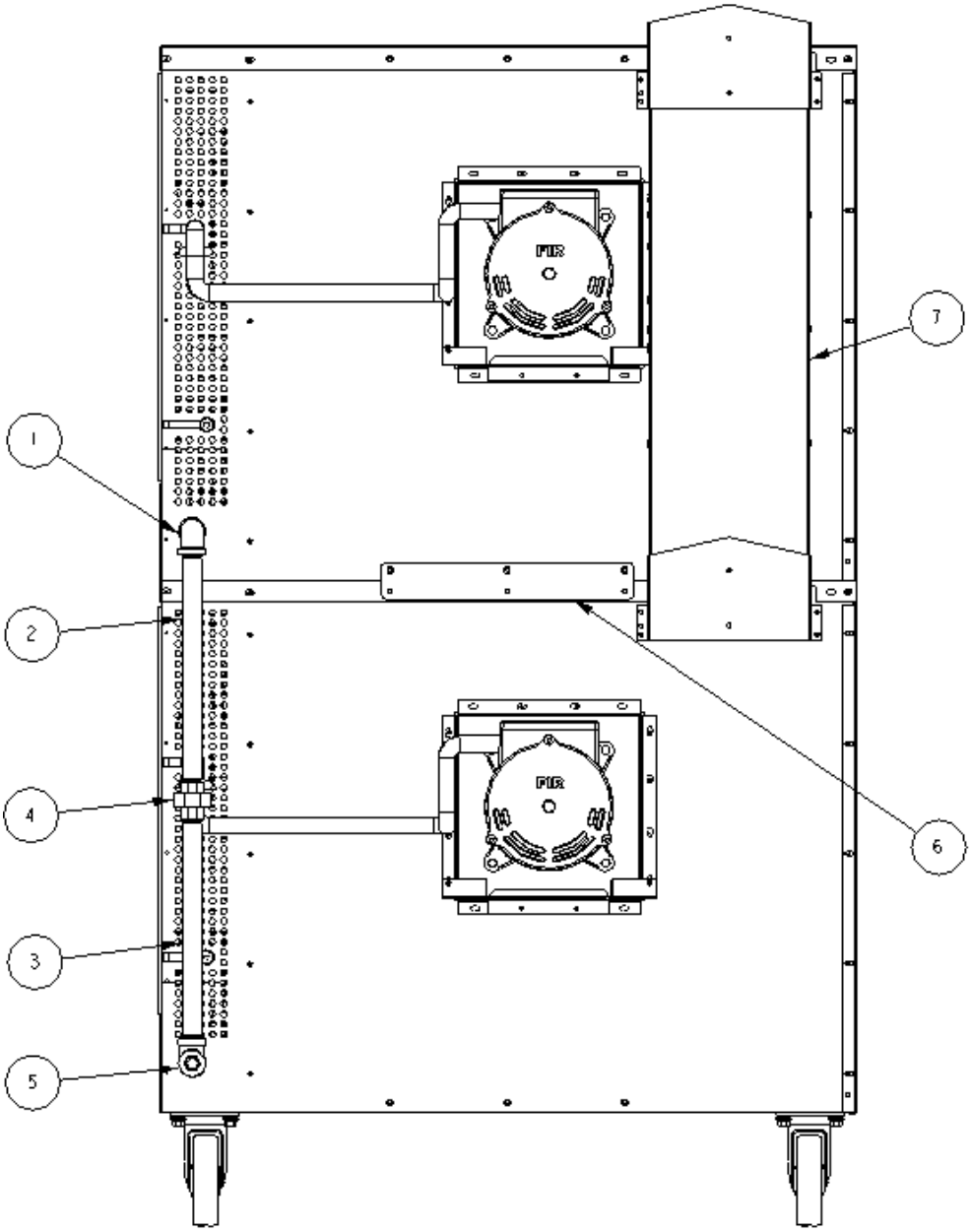

Key	Part Number	Qty	Description
1	1146904	1	3/4" elbow
2	1175149	2	3/4" x 13-1/8" pipe
3	9839	2	3/4" x 13-5/8" pipe
4	P-5239-5	1	3/4" union
5	1147304	1	3/4" tee pipe
6	1175085	1	Tie bracket
7	1181840	1	Flue box
*	1146213	2	Bolts

* not shown on drawing.

Leg Parts for Double-Deck Ovens

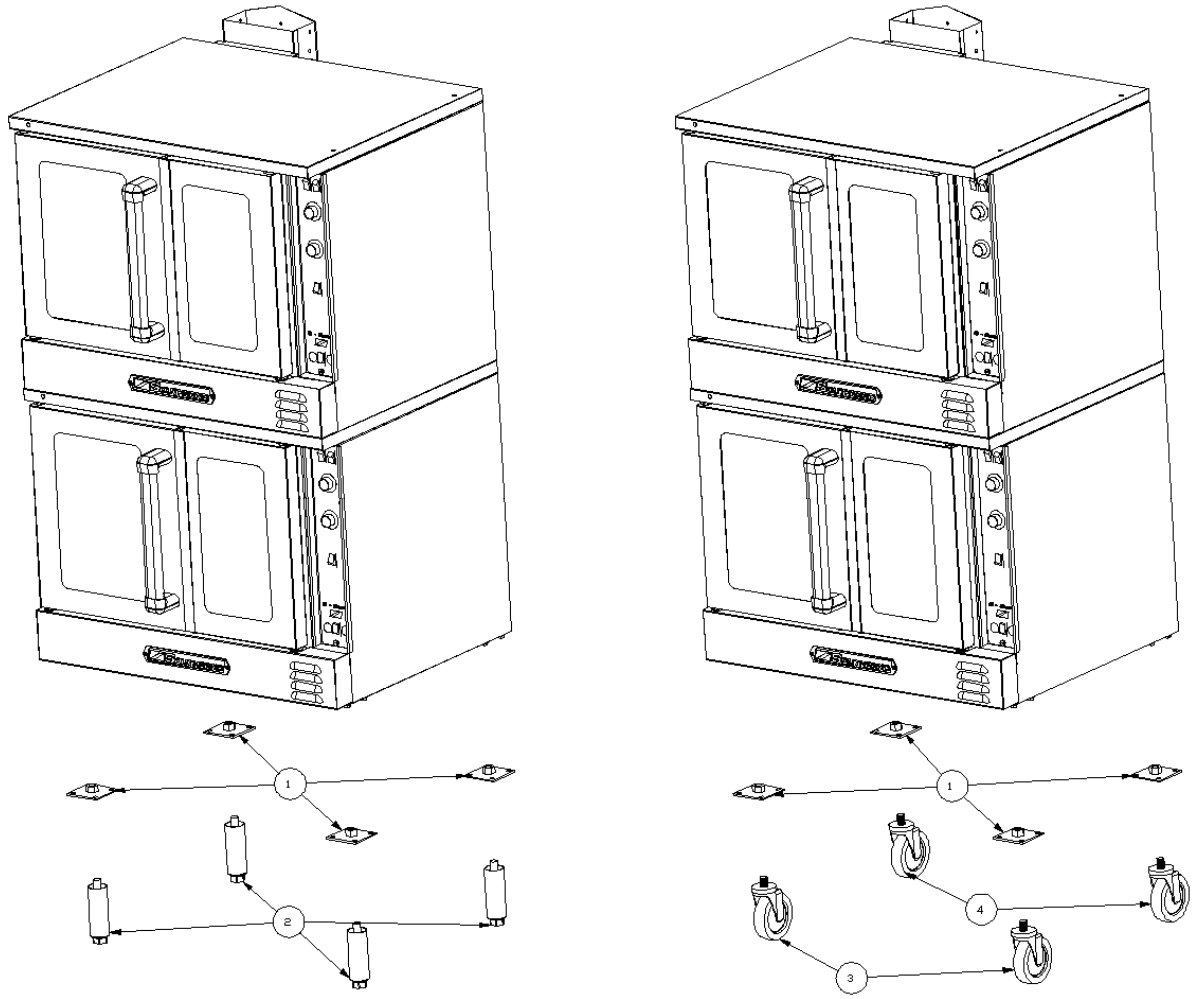

Key	Part Number	Qty	Description
1	1172788	4	Leg pad
2	1174259	4	SS leg, 3/4" stud
*	1174260	1	Stainless leg package (set of four legs only)
	1178205	1	Black leg package (set of four legs only)
	1174262	1	Earthquake legs (set of four legs only)
3	1174264	2	Caster with brake
4	1174263	2	Caster without brake
*	1174265	1	Set of four casters (two with brake, two without brake)
*	1146213	16	3/8 x 16 x 1 hex head bolt
*	1146513	16	3/8 lock washer
*	1146522	16	3/8 flat washer

* not shown on drawing.

User & Maintenance Notes:

PARTS MANUAL

G, SL & B-SERIES
GAS CONVECTION OVENS

Commercial Food Equipment Service Association

Genuine Parts
Protect *YOU* All-Ways !

A product with the Southbend name incorporates the best in durability and low maintenance. We all recognize, however, that replacement parts and occasional professional service may be necessary to extend the useful life of this unit. When service is needed, contact a Southbend Authorized Service Agency, or your dealer. To avoid confusion, always refer to the model number, serial number, and type of your unit.

Southbend
1100 Old Honeycutt Road, Fuquay-Varina, NC 27526
www.southbendnc.com

VULCAN

SERVICE MANUAL

R0006

948RX

Heavy Duty Gas Griddles

924RX
936RX
948RX
960RX
972RX
MSA24
MSA36
MSA48
MSA60
MSA72
ASA24
ASA36
ASA48
ASA60
ASA72

- NOTICE -

This Manual is prepared for the use of trained Vulcan Service Technicians and should not be used by those not properly qualified.

This manual is not intended to be all encompassing. If you have not attended a Vulcan Service School for this product, you should read, in its entirety, the repair procedure you wish to perform to determine if you have the necessary tools, instruments and skills required to perform the procedure. Procedures for which you do not have the necessary tools, instruments and skills should be performed by a trained Vulcan Service Technician.

The reproduction, transfer, sale or other use of this Manual, without the express written consent of Vulcan, is prohibited.

This manual has been provided to you by ITW Food Equipment Group LLC ("ITW FEG") without charge and remains the property of ITW FEG, and by accepting this manual you agree that you will return it to ITW FEG promptly upon its request for such return at any time in the future.

A product of Vulcan-Hart

3600 North Point Blvd Baltimore, MD 21222

F25383 (0219)

TABLE OF CONTENTS

SERVICES UPDATES 3
SERVICE UPDATES 3
TIS DOCUMENT LIST - 900RX SERIES 3

GENERAL 4
INTRODUCTION 4
INSTALLATION 4
OPERATION 4
CLEANING 4
SPECIFICATIONS 4
TOOLS 5
COMPONENT LOCATION 5

REMOVAL AND REPLACEMENT OF PARTS 6
COVERS AND PANELS 6
MOMENTARY POWER SWITCH (900RX) 6
ELECTRIC IGNITER (900RX) 7
BASO SAFETY VALVE 7
THERMOSTAT VALVE ASSEMBLY 7
BURNER 9
PILOT, THERMOCOUPLE ASSEMBLY 9

SERVICE PROCEDURES AND ADJUSTMENTS 11
CALIBRATION 11
PILOT ADJUSTMENT 12
GAS PRESSURE MEASUREMENT 12
GAS PRESSURE REGULATOR ADJUSTMENT 13
BURNER ADJUSTMENT 14
THERMOCOUPLE TEST 14

ELECTRICAL OPERATION 16
ELECTRICAL DIAGRAM 16

TROUBLESHOOTING 18
TROUBLESHOOTING 18

© VULCAN 2019

SERVICES UPDATES

SERVICE UPDATES

November, 2018
- Added TIS Document List.

February 2019
- Updated PILOT, THERMOCOUPLE ASSEMBLY.

TIS DOCUMENT LIST - 900RX SERIES

SERVICE TAB	
Document Title	**Document Type**
900RX Series Heavy Duty Gas Griddles Service Manual	Service Manual

SERVICE TAB (Multimedia)	
Document Title	**Document Type**
Repairing Flood-Damaged Food Equipment	Misc
900RX Series Heavy Duty Gas Operation & Installation Manual	Operator
AGE, AGM, 900RE, 900RX, and ASA Series Gas Griddle Grease Chute P/N 498234-A Installation Instructions	Service Instructions
Fundamentals of Gas	Service Instructions
Rating Plate Locations on Current Vulcan-Hart/Wolf Range Equipment	Technical Service Bulletin (TSB)
TSB 0842 4 Position/3 Heat Switch - Ranges, Ovens, Broilers	Technical Service Bulletin (TSB)
TSB 1037A Hobart to Vulcan "Common" Model Cross Reference List	Technical Service Bulletin (TSB)
TSB 1301 Onwatch Quicklook 72 for Gas Cooking Equipment	Technical Service Bulletin (TSB)
TSB 682 Griddle Lead Wire Upgrading	Technical Service Bulletin (TSB)
RobertShaw FS Flame Switch Recall Vulcan & Wolf Equipment Effected - PN 713933	Temporary Service Instructions (TSI)

PARTS TAB	
Document Title	**Document Type**
900RX and MSA Heavy Duty Gas Griddles Parts Catalog	Parts Catalog

GENERAL

⚠ WARNING

The griddle and its parts are hot. Use care when operating, cleaning or servicing the griddle.

INTRODUCTION

This Service Manual covers specific service information related to the models listed on the front cover and built after March 2010.

Procedures in this manual will apply to all 900RX models unless specified. No procedure in this manual will require the removal or raising of the griddle plate. Pictures and illustrations can be of any model unless the picture or illustration needs to be model specific.

MSA griddles have a standing pilot that must be lit manually. One pilot services two burners via a flame tube between the burners. The 900RX utilizes a spark ignition system that has a 'momentarily on' switch - that means the switch must be held down for sparking to take place, and it ceases sparking when released.

The MSA and 900RX have BASO® pilot safety valves that must be pressed to allow gas to feed the pilot burner. For the 900RX, the pilot buttons must be pressed at the same time the power switch is pressed in order to light the pilot.

INSTALLATION

Generally, installations are made by the dealer or contracted by the dealer or owner. Detailed installation instructions are included in the Installation and Operation Manual that is sent with each unit. However, it should be noted that an improperly installed unit, especially an unlevel unit can lead to premature electrical component failures. A unit that is higher in the front will cause the flue gases to vent improperly and gather in the front near the electrical components. All models must be installed with an externally mounted regulator.

OPERATION

Detailed operation instructions are included in the Installation & Operation Manual sent with each unit and are also available at WWW.VULCANHART.COM.

The 900RX models feature an electric ignition system that is controlled by a momentary power switch. The power switch turns the electric ignition system off and on only and will only supply power to the igniters when held down in the ON position. The burners and pilots will continue to work with the power switch in the OFF position until the gas supply to the unit is cut off or the griddle gas shut-off valve is turned to the OFF position. The pilots are monitored by thermocouples and pilot safety valves. If the pilot goes out, the safety valve will shut-off the gas supply to the pilot and main burners. In the event of a failure of the electronic ignition system, it is possible to ignite the pilots with an outside source (such as a lit taper). You will have to reach under the front of the unit and through the pilot cutout to ignite the pilots while again depressing the corresponding red button.

CLEANING

Detailed cleaning procedures are included in the Installation & Operation manual sent with each unit.

SPECIFICATIONS

Stainless steel front, sides and front top ledge. Fully welded stainless and aluminized steel body frame. 11" low profile cooking height on 4" legs. 1" thick polished steel griddle plate with 12 gage, 4" stainless steel back and tapered side splashes. Grease chute is fully welded to stop grease migration.

One 27,000 BTU/hr. “U” shaped aluminized steel burner and mechanical snap action thermostat for each 12" of griddle width. Chrome thermostat knob guards. Temperature adjusts from 200° to 550° F. One pilot safety for every two burners. Manual shut-off valve. 3½" wide stainless steel grease trough. 120V 50/60Hz 1 Amp single phase electric ignition circuit. Plug type is NEMA 5-15 USA. ¾" rear gas connection and gas pressure regulator.

A gas pressure regulator supplied with the unit must be installed.

Check and set the gas pressure after the regulator is installed.

Manifold pressure should be:

Natural Gas 4.0" W.C.

Propane Gas 10.0" W.C.

Incoming pressure should be 5-9" W.C. for Natural Gas and 11.0" W.C. for Propane Gas.

Incoming pressure should not exceed 14.0" W.C.

TOOLS

- Standard set of hand tools.
- VOM with A/C current tester (any quality VOM with a sensitivity of at least 20,000 ohms per volt can be used).
- Temperature tester (thermocouple type).
- U-Tube or Digital Manometer.
- Thread sealant suitable for use with natural or propane gas.
- Aluminum Foil Tape - McMaster Carr Part No. 7631421 or equivalent.
- Adapter to test thermocouple, Johnstone Supply Part No. H23-226 or equivalent.

Fig. 1

COMPONENT LOCATION

Front View 924RX

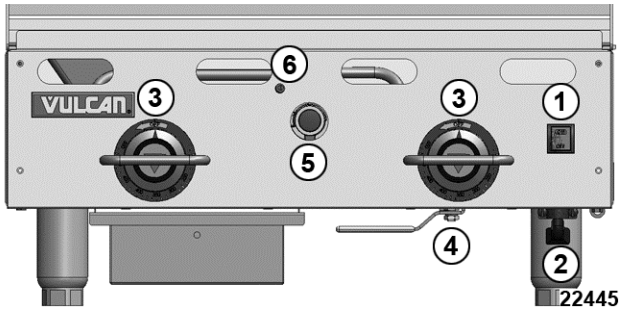

Fig. 2

1. Pilot electric ignition system control switch (RX only)
2. Power cord (RX only)
3. Thermostat
4. Gas shut off valve (RX only)
5. BASO® pilot safety valve
6. Pilot flame adjustment

Top View 924RX

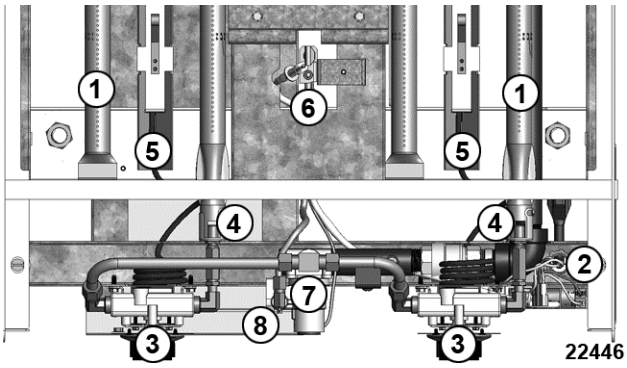

Fig. 3

1. Burner assembly
2. Electric igniter (RX only)
3. Thermostat
4. Orifice
5. Thermostat capillary tube
6. Pilot, igniter (RX only) and thermocouple
7. BASO® pilot safety valve
8. Pilot adjustment valve

REMOVAL AND REPLACEMENT OF PARTS

COVERS AND PANELS

⚠ WARNING

Disconnect the electrical power to the machine and follow lockout / tagout procedures.

FRONT PANEL

1. Turn all thermostats to off position, loosen set screw securing thermostat knobs and pull off knobs.

NOT IN OFF POSITION FOR VIEW

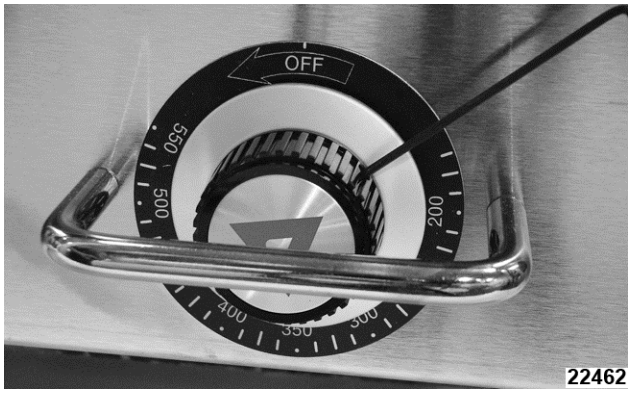

Fig. 4

2. Remove screws securing front panel to griddle.
3. Pull front panel forward and lay aside. If servicing a 900RX lay front panel face down in front of unit.
4. Install in reverse order.

NOTE: Before installing front panel, check that lineof-sight through the front panel to see both pilot burners and griddle burners. Move any flexible gas tubing, or capillary tubing that may obstruct the sight holes.

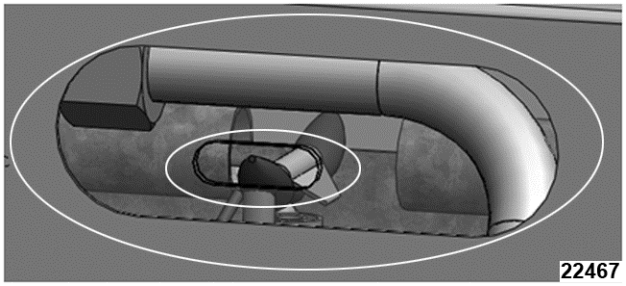

Fig. 5

BACK PANEL

⚠ WARNING

Shut off the gas before servicing the unit and follow lockout / tagout procedures.

⚠ WARNING

All gas joints disturbed during servicing must be checked for leaks. Check with a soap and water solution (bubbles). Do not use an open flame.

NOTE: It will be necessary to remove the back panel when changing a burner or to remove excessive grease build up from flue area.

1. Disconnect gas supply at griddle.

   Remove screws securing back panel to griddle.

   Install in reverse order.

MOMENTARY POWER SWITCH (900RX)

⚠ WARNING

Disconnect the electrical power to the machine and follow lockout / tagout procedures.

1. Remove FRONT PANEL.
2. Label and disconnect wires from power switch.
3. Squeeze switch retainers and slide switch out through front of panel.

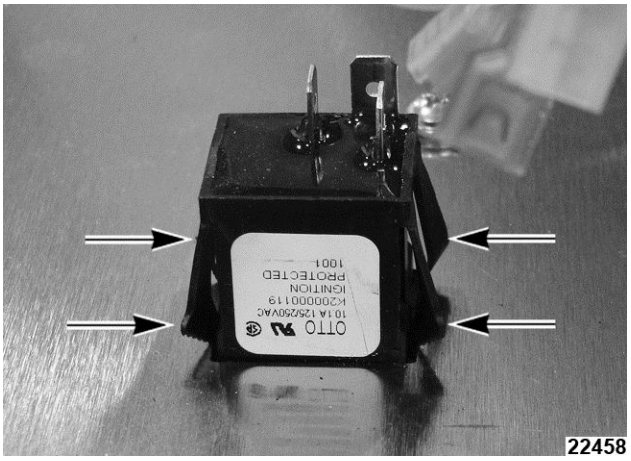

Fig. 6

4. Install in reverse order.

ELECTRIC IGNITER (900RX)

⚠ WARNING

Disconnect the electrical power to the machine and follow lockout / tagout procedures.

1. Remove FRONT PANEL.
2. Push tab to release igniter from frame and pull out of unit.

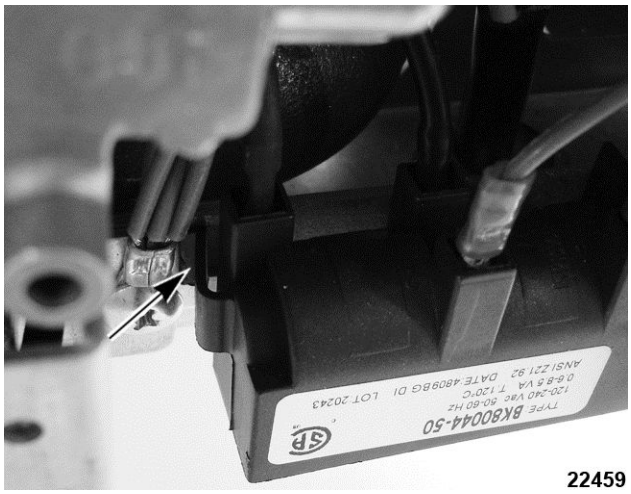

Fig. 7

3. Label and disconnect wires from electric igniter.
4. Install in reverse order.

BASO SAFETY VALVE

⚠ WARNING

Disconnect the electrical power to the machine and follow lockout / tagout procedures.

⚠ WARNING

Shut off the gas before servicing the unit and follow lockout / tagout procedures.

⚠ WARNING

All gas joints disturbed during servicing must be checked for leaks. Check with a soap and water solution (bubbles). Do not use an open flame.

1. Remove FRONT PANEL.
2. Measure distance between manifold pipe and valve for reassembly later.

NOTE: Ignition wires must be routed in front of valves as shown to prevent them from touching hot heat shield.

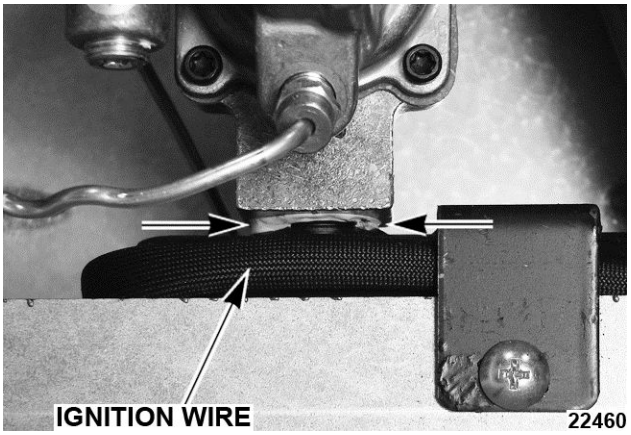

Fig. 8

3. Disconnect all gas lines and thermocouple from valve.
4. Remove valve from unit.
5. Transfer fittings from old valve to new valve. Use thread sealant on assembly.
6. Install new valve to same measurement as in Step 2.
7. Continue to install in reverse order.

THERMOSTAT VALVE ASSEMBLY

⚠ WARNING

Disconnect the electrical power to the machine and follow lockout / tagout procedures.

⚠ WARNING

Shut off the gas before servicing the unit and follow lockout / tagout procedures.

⚠ WARNING

All gas joints disturbed during servicing must be checked for leaks. Check with a soap and water solution (bubbles). Do not use an open flame.

1. Remove FRONT PANEL.
2. Disconnect gas line.

3. Remove screws securing thermostat mounting bracket to frame.

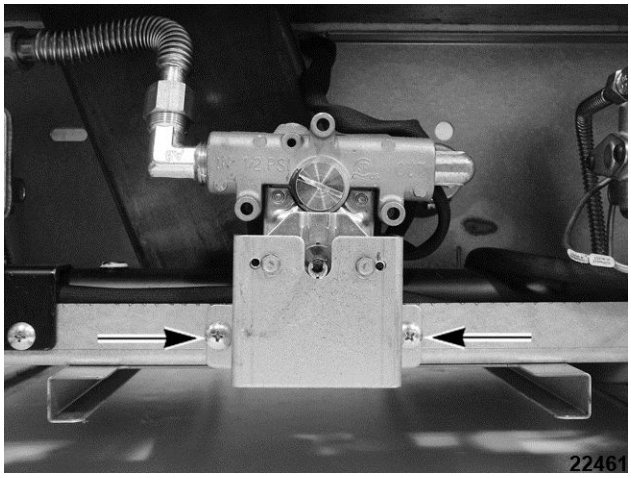

Fig. 9

4. Pull capillary tube out from underneath griddle plate.
5. Transfer fittings from old thermostat to new thermostat. Use thread sealant.
6. Transfer thermostat mounting bracket to new thermostat.
7. Remove insulator sleeve from old capillary tube and install on new thermostat.
8. Secure end of insulator sleeve to thick end of capillary tube with metal tape as shown.

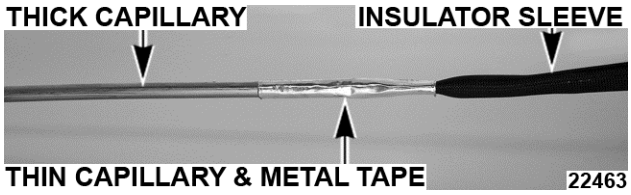

Fig. 10

9. Slide capillary tube all the way into slot underneath griddle plate until it is fully seated.
10. Carefully insert orifice into burner and secure thermostat mounting bracket to frame.

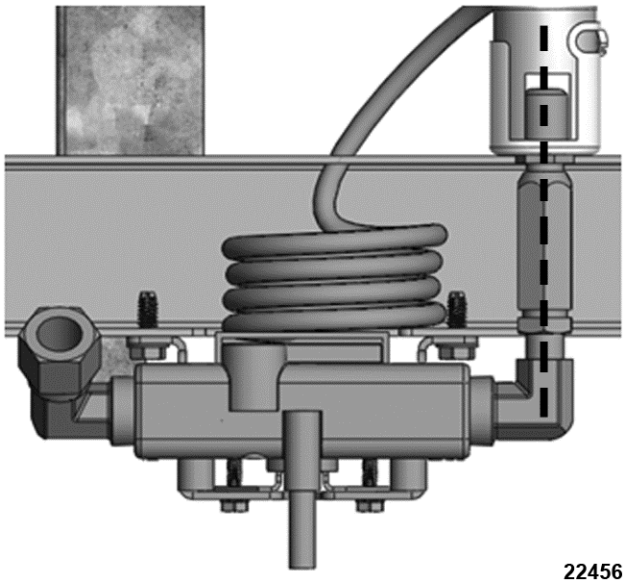

Fig. 11

11. Inlet to burner must be straight. Adjust thread on orifice and/or extension to close gap between orifice and burner to 1/16".

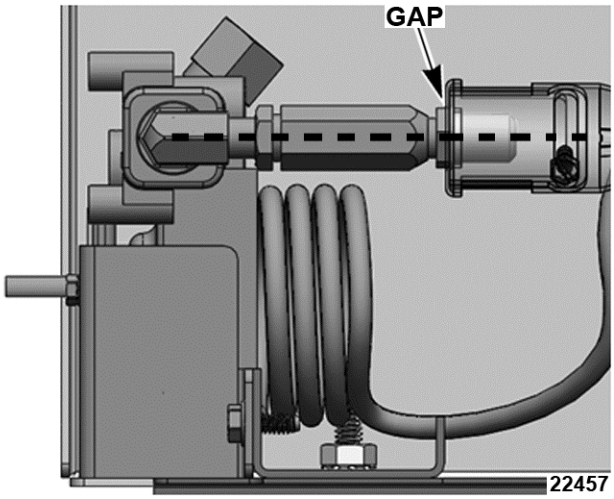

Fig. 12

12. Continue to install in reverse order.

BURNER

⚠ WARNING

Disconnect the electrical power to the machine and follow lockout / tagout procedures.

⚠ WARNING

Shut off the gas before servicing the unit and follow lockout / tagout procedures.

⚠ WARNING

All gas joints disturbed during servicing must be checked for leaks. Check with a soap and water solution (bubbles). Do not use an open flame.

1. Remove FRONT PANEL and BACK PANEL.
2. Disconnect gas supply at griddle.
3. Remove screw securing burner to wall.

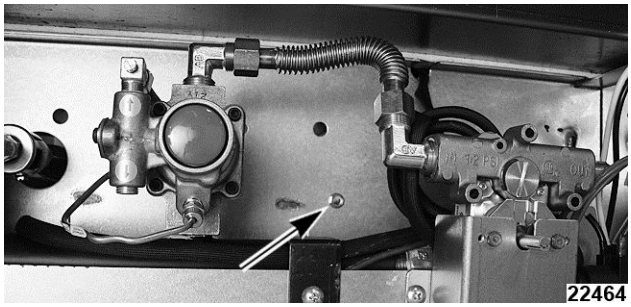

Fig. 13

4. At rear of unit, pull burner enough to disengage burner pin from frame and pull burner out.

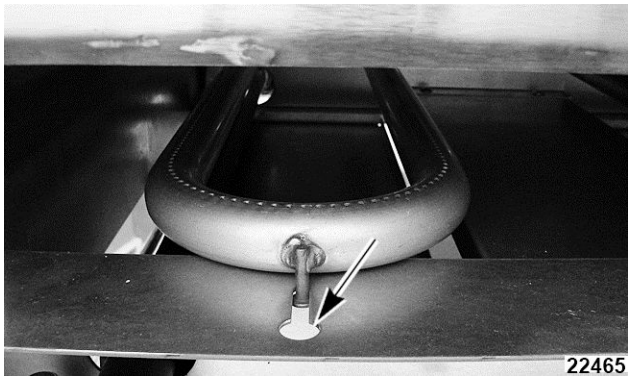

Fig. 14

5. Install in reverse order.
6. Adjust as outlined in BURNER ADJUSTMENT.

PILOT, THERMOCOUPLE ASSEMBLY

⚠ WARNING

Disconnect the electrical power to the machine and follow lockout / tagout procedures.

⚠ WARNING

Shut off the gas before servicing the unit and follow lockout / tagout procedures.

1. Remove FRONT PANEL.
2. From underneath the front of the griddle, remove screw securing pilot assembly bracket.

   VIEW FROM REAR OF UNIT TO SEE PARTS

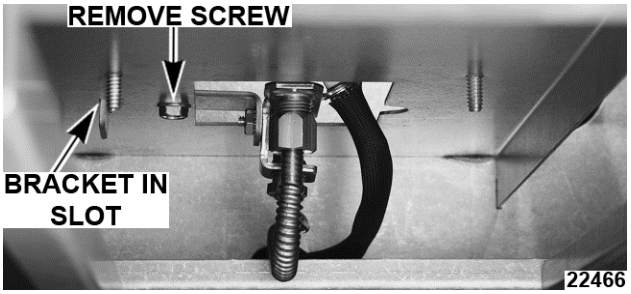

Fig. 15

3. Carefully lift to disengage bracket from slot and work assembly down to access parts.
4. With pilot (1, Fig. 16) centered in flash tube opening, center align ignition ports with both sides of flash tube (2, Fig. 16). Verify 1/8” gap between the end of flash tube and burner on both sides.

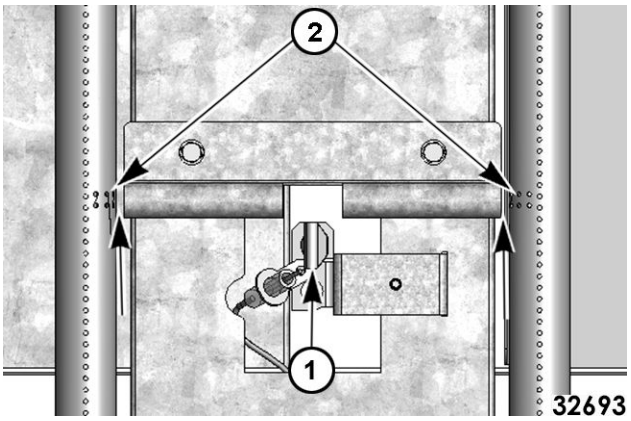

Fig. 16

5. Service assembly as required and assemble in reverse order being sure bracket is seated in slot for alignment.

SERVICE PROCEDURES AND ADJUSTMENTS

CALIBRATION

LEVEL

The griddle must be level (side-to-side and front-to-back) during operation to ensure proper performance. Improper leveling can result in uneven temperature distribution, cold spots, and possibly damage electrical components.

1. Place a level on the griddle.
2. Adjust legs by turning the bullet feet at the bottom of each leg. Using pliers or a crescent wrench, turn the feet counter-clockwise to increase height, and clockwise to decrease height until leveling is achieved. Do not extend the legs more than 1-¾”.

CALIBRATE

1. Each thermostat controls a 12” zone of the griddle. Using a Surface Probe temperature measurement device, observe the temperatures at the center points of the cooking zones. These points are located by starting 6” from the side splash (left or right) and every 12” across the width of the griddle, with all points located 12” back from the front edge of the griddle plate.

NOTE: Use of infrared thermometers is not recommended. These devices are highly sensitive to surface color (clean or dirty), angle of reading and distance from the unit.

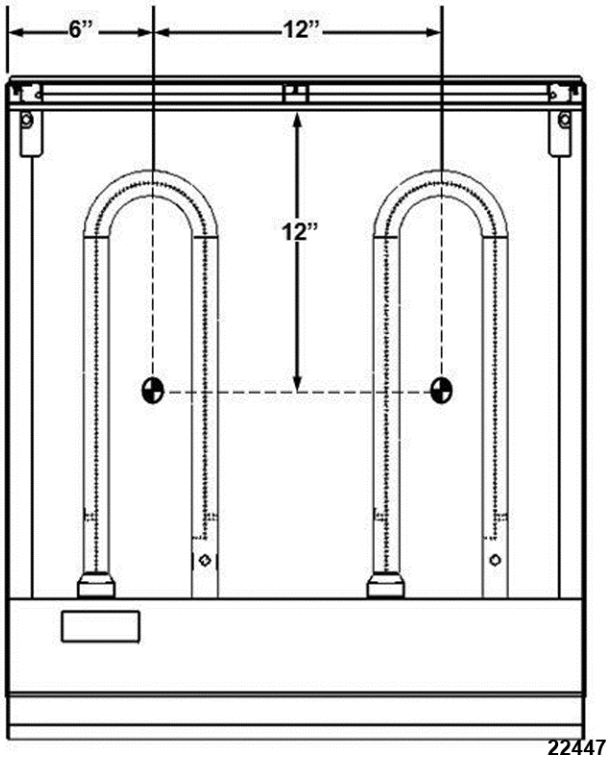

Fig. 17

2. Set thermostats to 350°F and allow to stabilize.
3. Record the temperature tester readouts for each zone for *3 cycles*.

Temperature Tester turn-*off* deg F	**Temperature Tester turn-*on* deg F**	**Turn-Off + Turn-On divide by 2 = average**
		Total averages
		divide by 3 ____ deg F

4. Calculate total average temperature for that zone.
5. The temperature should be 350°F ±15°F. If not, continue to next step.

6. Carefully loosen the knob set screw. DO NOT allow the knob to turn. Carefully remove the knob from the thermostat shaft, exposing the temperature dial.

Fig. 21

7. Loosen screws on the temperature dial and adjust it so that the temperature indicated by the knob arrow matches the griddle plate temperature reading. Knob will have to be carefully placed back on the shaft to verify adjustment.

Fig. 22

NOTICE

Never adjust the screw in the center of the thermostat shaft. This will ruin the factory calibration; the thermostat will no longer operate properly and will need to be replaced.

8. Once calibration is achieved, tighten the temperature dial screws and knob set screws.

Fig. 23

9. Repeat Steps 3 thru 8 for each zone.

PILOT ADJUSTMENT

Using a flathead screwdriver, turn the slotted pilot adjustment screw clockwise to decrease the flame, and counterclockwise to increase the flame.

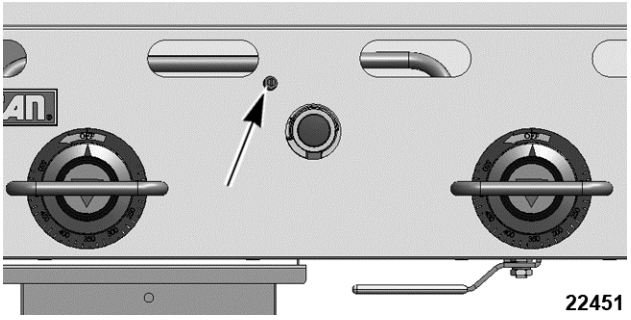

Fig. 24

GAS PRESSURE MEASUREMENT

⚠ WARNING

All gas joints disturbed during servicing must be checked for leaks. Check with a soap and water solution (bubbles). Do not use an open flame.

1. Turn the gas supply off at a manual shutoff valve.
2. Remove the control panel.
3. Remove the pressure tap plug and attach manometer.
4. Turn gas back on.
5. Light pilot(s).
6. Turn all thermostats on to the maximum setting so that all burners are on.
7. Turn all the equipment on the same supply line on.

8. Check gas pressure.
9. Gas pressure should read 4” W.C. for natural and 10” W.C. for propane gas. If not correct, refer to GAS PRESSURE REGULATOR ADJUSTMENT.
10. Turn gas supply off, disconnect manometer and reinstall pressure tap plug.

924RX SHOWN

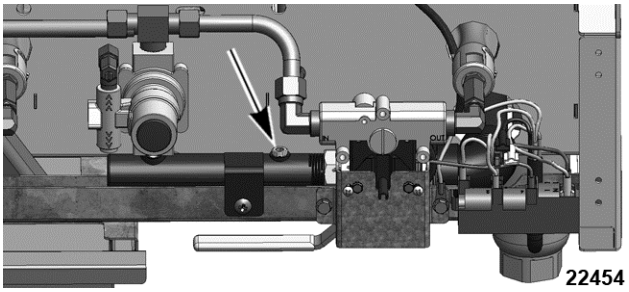

Fig. 25

GAS PRESSURE REGULATOR ADJUSTMENT

A gas pressure regulator is supplied with the griddle and must be installed as close to the griddle on the gas supply line as possible. Make sure that the arrow on the underside of the regulator is oriented in the direction of gas flow to the griddle and the regulator is positioned with the vent plug and adjustment screw upright. Check that vent plug is not clogged by grease and debris.

Check and set the gas pressure after the regulator is installed. The pressure should be set for 4” water column (W.C.) for natural gas and 10” W.C. for propane gas while all burners are on.

The supply pressure (upstream of the regulator) should be 7-9” W.C. for natural gas and 11-12” W.C. for propane gas. At no time should the griddle be connected to supply pressure greater than ½ psig (3.45 kPa) or 14” W.C.

Graphic shows pressure plug location.

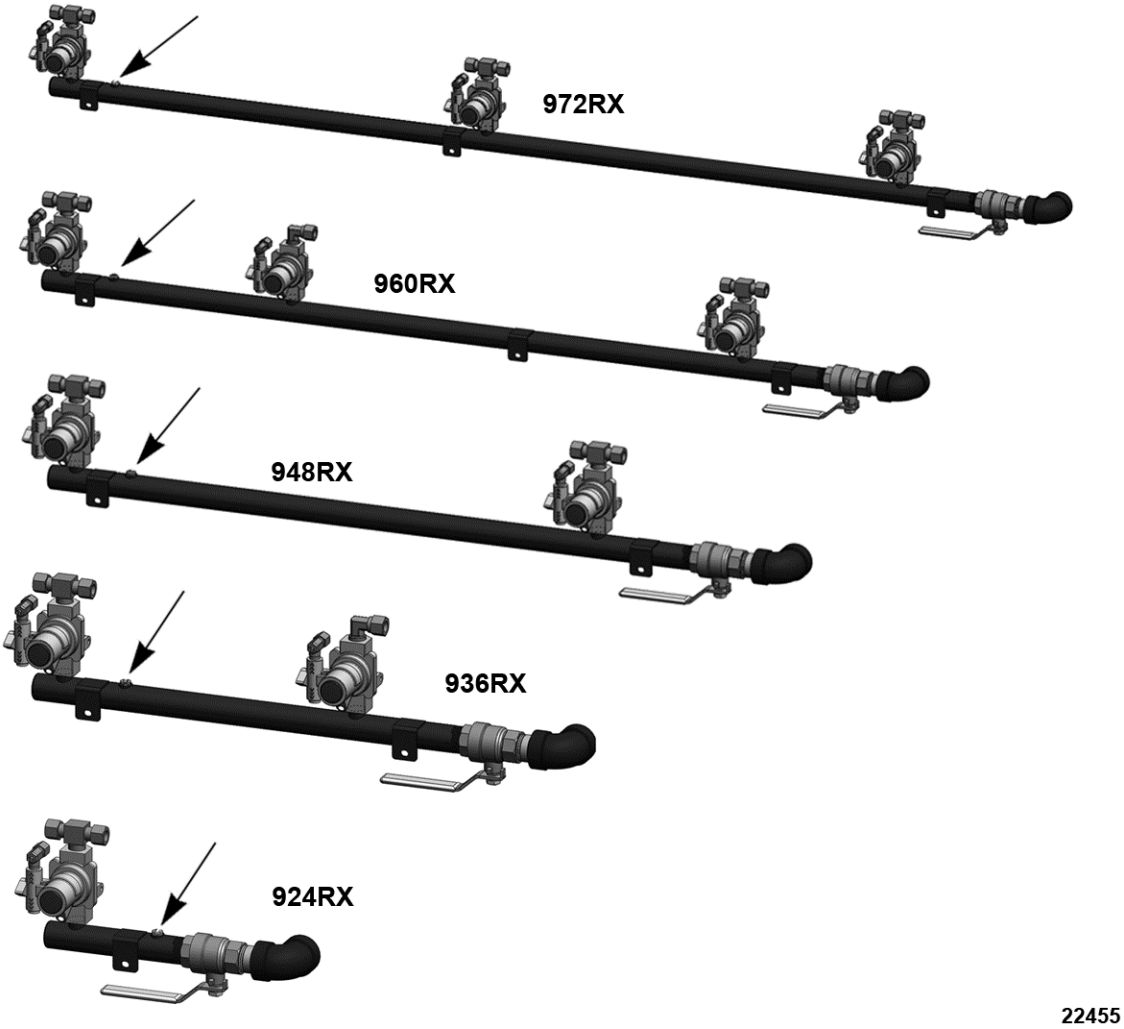

Fig. 26

NOTE: MSA models are in same locations. There are no shut off valves.

BURNER ADJUSTMENT

For efficient burner operation, it is important that a proper balance of gas volume and primary air supply is maintained to give complete combustion. Insufficient air supply results in a yellow streaming flame. Primary air supply is controlled by the air shutter on the front of the burner venturi. Loosen the screw on the venturi and adjust the air shutter to just eliminate yellow tips on the burner flames. Lock the air shutter in place in place by tightening the screw. Repeat this procedure as necessary with all burners.

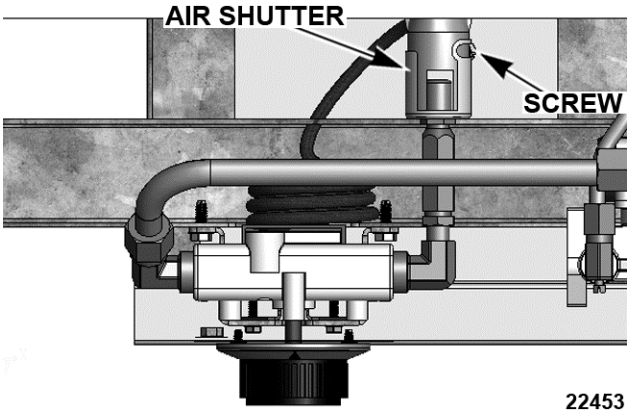

Fig. 27

THERMOCOUPLE TEST

1. Unscrew thermocouple fitting from safety valve.

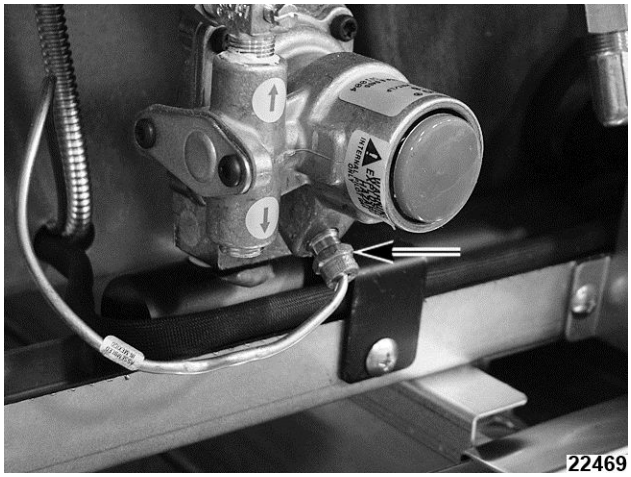

Fig. 28

2. Install thermocouple test adapter finger tight plus a quarter turn.
3. Install thermocouple into test adapter finger tight plus a quarter turn.

NOTE: Over tightening can cause thermocouple tip to short out.

4. Set VOM to DC millivolt scale and connect (+) meter lead to pin on thermocouple adapter and (-) meter lead to thermocouple.

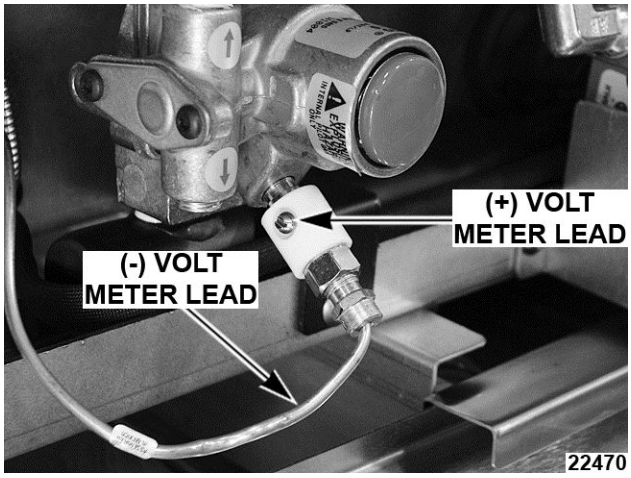

Fig. 29

5. Light pilot flame.
6. Verify that thermocouple is sufficiently immersed in flame. Adjust pilot valve to allow more gas flow if necessary.
7. With thermostat off, allow pilot to burn for 3-4 minutes to stabilize voltage output from thermocouple.
8. Verify thermocouple output voltage.
   A. If 25 - 35 millivolts is measured, the thermocouple is functioning properly.
   B. If less than 17 millivolts is measured, install a replacement thermocouple.
9. Remove test adapter.

ELECTRICAL OPERATION

ELECTRICAL DIAGRAM

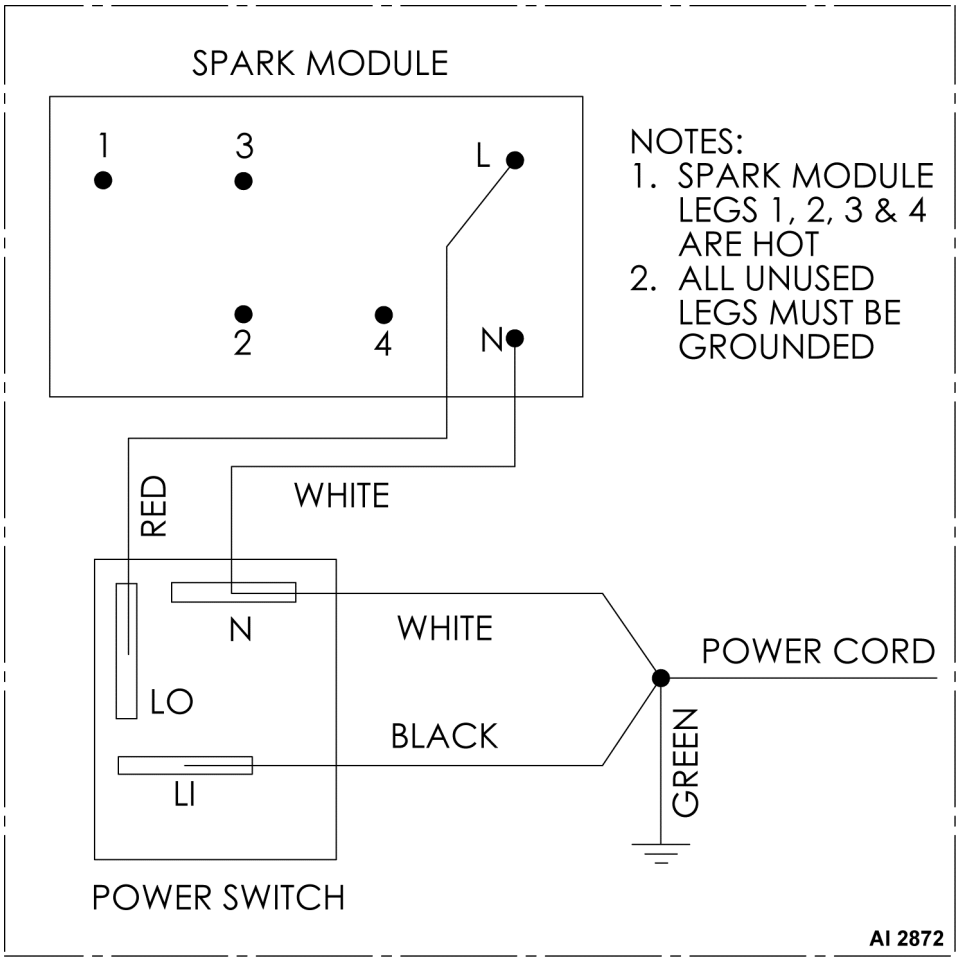

Fig. 30

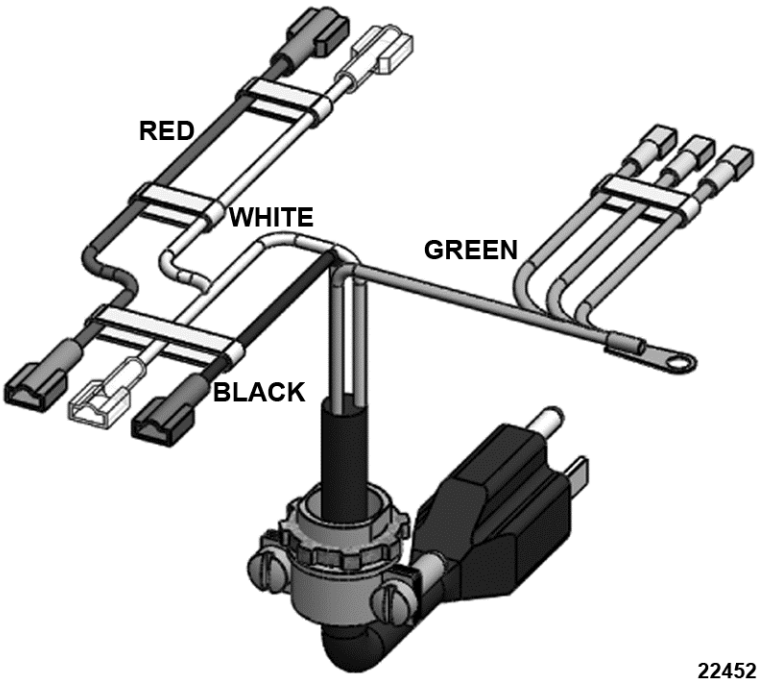

Fig. 31

TROUBLESHOOTING

TROUBLESHOOTING

SYMPTOMS	POSSIBLE CAUSES
No spark to ignite pilot gas.	1. Power cord unplugged. 2. Igniter switch malfunction. 3. Shorted electrode on ignitor. 4. Ignitor cable malfunction. 5. Interconnecting wiring malfunction. 6. Electric Igniter Module malfunction.
Sparks but gas does not ignite.	1. Service gas valve closed. 2. Gas supply not purged of air. Depress pilot safety button until air is purged. 3. Gas supply off or insufficient gas pressure. 4. Adjust pilot valve to allow more gas flow. 5. Safety valve malfunction.
Gas pilot ignites but will not maintain flame.	1. Air blowing pilot out. Prevent air flow from affecting unit. 2. Gas supply not purged of air. Depress pilot safety button until air is purged. 3. Adjust pilot valve to allow more gas flow. 4. Thermocouple not sufficiently immersed in flame. Adjust accordingly. 5. Thermocouple malfunction. Refer to THERMOCOUPLE TEST. 6. Obstructed pilot orifice. 7. Insufficient gas pressure. 8. Safety valve malfunction.
Gas burners ignite but will not maintain flame.	1. Gas pressure incorrect or fluctuating. 2. Obstructed flue. 3. Gas orifice obstructed, improperly aligned / spaced, or incorrect. 4. Burner malfunction.
One or more burners have lower flame level than the others.	1. Check gas pressure. 2. External air flow or vent hood problems may agitate affected burners. 3. Gas orifice obstructed, improperly aligned / spaced, or incorrect. 4. Adjust burner air shutter.

SYMPTOMS	POSSIBLE CAUSES
One burner has a delayed ignition; a several second lapse when the burner actually lights.	1. Check gas pressure. 2. Check that burner is properly seated. 3. Check that burner ignition ports, pilot flash tube and pilot burner are all aligned. 4. Gas orifice obstructed, improperly aligned / spaced, or incorrect. 5. Check burner shutter adjustment. 6. Check pilot flame adjustment.
Excessive or low heat.	1. Gas shut off valve not completely open. 2. Thermostats need calibrated. See CALIBRATION section. 3. Thermostat malfunction. 4. Gas pressure incorrect. 5. Unit's gas regulator not installed or malfunctioning. 6. Incorrect gas type. 7. Gas orifice obstructed or incorrect.
Heat does not come on when the thermostat is turned on.	1. Pilot burner not lit. 2. Griddle shut-off valve not in ON position. 3. Low gas pressure. 4. Thermostat malfunction.

R0006

HOSHIZAKI

Instruction Manual

Steelheart Series
Refrigerated Kitchen Equipment

Models
Refrigerated Equipment Stand

hoshizakiamerica.com

Issued: 8-18-2021
Revised: 11-17-2021

⚠ WARNING

Only qualified service technicians should install and service the appliance. To obtain the name and phone number of your local Hoshizaki Certified Service Representative, visit www.hoshizaki.com. No installation or service should be undertaken until the technician has thoroughly read this Instruction Manual. Likewise, the owner/manager should not proceed to operate the appliance until the installer has instructed them on its proper operation. Failure to install, operate, and maintain the appliance in accordance with this manual may adversely affect safety, performance, component life, and warranty coverage. Proper installation is the responsibility of the installer. Product failure or property damage due to improper installation is not covered under warranty.

Hoshizaki provides this manual primarily to assist qualified service technicians in the installation, maintenance, and service of the appliance.

Should the reader have any questions or concerns which have not been satisfactorily addressed, please call, send an e-mail message, or write to the Hoshizaki Technical Support Department for assistance.

Phone: 1-800-233-1940; (770) 487-2331
Fax: 1-800-843-1056; (770) 487-3360

E-mail: techsupport@hoshizaki.com

HOSHIZAKI AMERICA, INC.
618 Highway 74 South
Peachtree City, GA 30269
Attn: Hoshizaki Technical Support Department

Web Site: www.hoshizaki.com

NOTE: To expedite assistance, all correspondence/communication MUST include the following information:

- Model Number _____
- Serial Number _____
- Complete and detailed explanation of the problem.

IMPORTANT
This manual should be read carefully before the appliance is installed and operated. Read the warnings and guidelines contained in this manual carefully as they provide essential information for the continued safe use and maintenance of the appliance. Retain this manual for any further reference that may be necessary.

CONTENTS

Important Safety Information 4
I. Installation Instructions 8
A. Location 8
B. Checks Before Installation 9
C. Setup 9
D. Electrical Connection 10
E. Final Checklist 11
II. Operating Instructions 12
A. Important Notes About Usage 12
B. Startup 15
C. Controls and Adjustments 15
1. Temperature Display 15
2. Adjusting the Temperature Setpoint 15
3. Changing the Temperature Display Scale (°F or °C) 16
D. Control Module Icons 17
E. Defrost 18
F. Alarm Safeties 19
G. Food Storage 20
H. Safety Devices 20
I. Cooling Performance 21
J. Cabinet Condensation 21
III. Cleaning and Maintenance Instructions 22
A. Cleaning 22
B. Maintenance 24
IV. Preparing the Appliance for Periods of Non-Use 25
V. Disposal 26

Important Safety Information

Throughout this manual, notices appear to bring your attention to situations which could result in death, serious injury, damage to the appliance, or damage to property.

⚠ DANGER	**Indicates a hazardous situation that, if not avoided, will result in death or serious injury.**
⚠ DANGER	**Indique un risque imminent qui causera la mort ou de graves blessures, s'il n'est pas évité.**
⚠ WARNING	**Indicates a hazardous situation that, if not avoided, could result in death or serious injury.**
NOTICE	**Indicates a situation that, if not avoided, could result in damage to the appliance or property.**
IMPORTANT	**Indicates important information about the use and care of the appliance.**

⚠ DANGER

Risk of Fire or Explosion

Flammable Refrigerant Used

- Follow handling instructions carefully in compliance with U.S. government regulations.
- Do not use mechanical devices to defrost.
- Do not puncture refrigerant tubing. Risk of fire or explosion due to puncture of refrigerant tubing; follow handling instructions carefully.
- Component parts shall be replaced with like components.
- Servicing shall be done by factory authorized service personnel to minimize the risk of possible ignition due to incorrect parts or improper service.
- Consult instruction manual/service manual before attempting to install or service this product. All safety precautions must be followed.
- Dispose of properly in accordance with federal or local regulations.
- Do not place any potential ignition sources in or near the appliance.

Risque De Feu Ou D'Explosion

Le Frigorigène Est Inflammable

- Suivre attentivement les instructions de manipulation conformément à la réglementation gouvernementale.
- Ne pas utiliser d'appareils mécaniques pour dégivrer le réfrigérateur.
- Ne pas perforer la tubulure contenant le frigorigène. Risque de feu ou d'explosion si la tubulure contenant le frigorigène est perforée; suivre les instructions de manutention avec soin.
- Les pièces des composants doivent être remplacées par des pièces et accessoires équivalents.
- L'entretien doit être effectué par le personnel de service autorisé par le fabricant afin de minimiser les risques d'inflammation attribuables à l'installation d'une pièce inadéquate ou à la mauvaise exécution du service.
- Consulter le manuel du propriétaire/ guide de réparation avant de tenter une réparation. Toutes les mesures de sécurité doivent être respectées.
- Éliminer conformément aux règlements fédéraux ou locaux.
- Ne placez aucune source d'inflammation potentielle dans ou près de l'appareil.

⚠ WARNING

The appliance should be destined only to the use for which it has been expressly conceived. Any other use should be considered improper and therefore dangerous. The manufacturer cannot be held responsible for injury or damage resulting from improper, incorrect, and unreasonable use. Failure to install, operate, and maintain the appliance in accordance with this manual will adversely affect safety, performance, component life, and warranty coverage.

To reduce the risk of death, electric shock, serious injury, or fire, follow basic precautions including the following:

- Only qualified service technicians should install and service the appliance.
- Wear appropriate personal protective equipment (PPE) when servicing the appliance.
- The appliance must be installed in accordance with applicable national, state, and local codes and regulations.
- Appliance is heavy. Use care when lifting or positioning. Work in pairs when needed to prevent injury or damage. Do not lift using the top section or the drawers.
- The appliance requires an independent power supply of proper capacity. See the nameplate for electrical specifications. Failure to use an independent power supply of proper capacity can result in a tripped breaker, blown fuse, damage to existing wiring, or component failure. This could lead to heat generation or fire.
- To reduce the risk of electric shock, do not touch the plug with damp hands.
- Unplug the appliance before servicing.
- Risk of electric shock. Appliance in the off position does not de-energize all loads. Use extreme caution and exercise safe electrical practices.
- **THE APPLIANCE MUST BE GROUNDED.** The appliance is equipped with a NEMA 5-15 three-prong grounding plug to reduce the risk of potential shock hazards. It must be plugged into a properly grounded, independent 3-prong wall outlet. If the outlet is a 2-prong outlet, it is your personal responsibility to have a qualified electrician replace it with a properly grounded, independent 3-prong wall outlet. Do not remove the ground prong from the power cord and do not use an adapter plug. Failure to follow these instructions may result in death, electric shock, or fire.
- Do not use an extension cord.
- Do not use an appliance with a damaged power cord. The power cord should not be altered, jerked, bundled, weighed down, pinched, or tangled. Such actions could result in electric shock or fire. To unplug the appliance, be sure to pull the plug, not the cord, and do not jerk the cord.
- The GREEN ground wire in the factory-installed power cord is connected to the appliance. If it becomes necessary to remove or replace the power cord, be sure to connect the power cord's ground wire.
- Do not splash, pour, or spray water directly onto or into the appliance. This might cause short circuit, electric shock, corrosion, or failure.
- Do not make any alterations to the appliance. Alterations could result in electric shock, injury, fire, or damage to the appliance.
- Do not use combustible spray or place volatile or flammable substances in or near the appliance. They might catch fire.
- Be careful not to pinch fingers when opening and closing the drawers or when handling food pans. Be careful when opening and closing the drawers when children are in the area.

⚠ WARNING, continued

- Children should be properly supervised around the appliance.
- Do not climb, stand, or hang on the appliance or drawers or allow children or animals to do so. Do not climb into the appliance or allow children or animals to do so. Death or serious injury could occur or the appliance could be damaged.
- Open and close the drawers with care. Opening the drawers too quickly or forcefully may cause injury or damage to the appliance or surrounding equipment.
- The appliance is not intended for use by persons (including children) with reduced physical, sensory, or mental capabilities, or lack of experience and knowledge, unless they have been given supervision or instruction concerning use of the appliance by a person responsible for their safety.
- Keep the area around the appliance clean. Dirt, dust, or insects in the appliance could cause harm to individuals or damage to the equipment.
- The appliance is designed only for temporary storage of food. Employ sanitary methods. Use for any other purposes (for example, storage of chemicals or medical supplies such as vaccine and serum) could cause deterioration of stored items.
- A minimum of 4" (11 cm) clearance is required between the bottom of the cooking equipment heating element and the appliance top. When setting up cooking equipment, follow the cooking equipment manufacturer's setup procedure. Temperature at the appliance top must not exceed 180°F (82°C). For optimum performance, installation of a heat shield (supplied by others) is recommended.
- For cooking equipment on the cabinet, do not exceed the total maximum weight listed for your model.

Total Maximum Weight for Cooking Equipment on the Cabinet	
CR36A **CR49A** **CR60A**	700 lb. (318 kg)
CR72A **CR78A** **CR85A**	1,200 lb. (544 kg)
CR98A **CR110A**	1,500 lb. (680 kg)

- Do not load any single drawer with more than 75 lb. (34 kg) of product. Depending on the weight of product in the drawers, secure the unit as necessary to prevent it from overturning. Do not open more than one drawer at a time.
- Do not block air inlets or outlets, otherwise cooling performance may be reduced.
- Do not tightly pack the cabinet. Allow some space between items to ensure good air flow. Also allow space between items and interior surfaces.
- Food storage and handling must comply with applicable codes and regulations.
- Do not put warm or hot foods in the cabinet. Let them cool first, or they will raise the cabinet temperature and could deteriorate other foods in the cabinet or overload the appliance.
- All foods should be wrapped in plastic film or stored in sealed containers. Otherwise foods may dry up, pass their smells onto other foods, cause frost to develop, result in poor appliance performance, or increase the likelihood of cross-contamination. Certain dressings and food ingredients, if not stored in sealed containers, may accelerate corrosion of the evaporator, resulting in failure.

⚠ WARNING, continued

- Do not store items near air outlets. Otherwise, items may freeze up and crack or break causing a risk of injury or contamination of other food.
- All casters on the appliance are lockable. After positioning the appliance in its final location, lock all casters.

NOTICE

- Protect the floor when moving the appliance to prevent damage to the floor.
- Keep ventilation openings, in the appliance enclosure or in the built-in structure, clear of obstruction. The factory-installed rear bumpers must be in place to ensure proper rear clearance. Blockage of airflow could negatively affect performance and damage the appliance.
- To prevent deformation or cracks, do not spray insecticide onto the plastic parts or let them come into contact with oil.
- To avoid damage to the gasket, use only the drawer handle when opening and closing.
- To avoid damage to the top seal, do not lift the appliance by the top panel or remove the top panel.
- Do not leave the drawers open.

I. Installation Instructions

⚠ WARNING

- The appliance must be installed in accordance with applicable national, state, and local regulations.
- Appliance is heavy. Use care when lifting or positioning. Work in pairs when needed to prevent injury or damage. Do not lift using the top section or the drawers.
- Do not tilt the appliance more than 45°.

A. Location

⚠ WARNING

- The appliance is not intended for outdoor use.
- Normal operating ambient temperature: 45°F to 100°F (7°C to 38°C)
  Operation of the appliance, for extended periods, outside of this normal temperature range may affect appliance performance.

- The appliance must not be located next to ovens, grills, or other high heat producing equipment.
- The location must provide a firm and level foundation for the appliance.
- The appliance must not be located in a corrosive environment.
- Minimum Clearance

Top	Side	Rear
WARNING! A minimum of 4" (11 cm) clearance is required between the bottom of the cooking equipment heating element and the appliance top. When setting up cooking equipment, follow the cooking equipment manufacturer's setup procedure.	1" (25 mm)	The factory-installed rear bumpers must be in place to ensure proper rear clearance.

- **WARNING! Temperature at the appliance top must not exceed 180°F (82°C). For optimum performance, installation of a heat shield (supplied by others) is recommended.**
- **WARNING! For cooking equipment on the cabinet, do not exceed the total maximum weight listed for your model.**

Total Maximum Weight for Cooking Equipment on the Cabinet		
CR36A, CR49A, CR60A	**CR72A, CR78A, CR85A**	**CR98A, CR110A**
700 lb. (318 kg)	1,200 lb. (544 kg)	1,500 lb. (680 kg)

B. Checks Before Installation

⚠ WARNING

The rating label and nameplate provide electrical and refrigerant data. The rating label can be seen by removing the front panel. The nameplate is located on the rear panel. For certification marks, see the nameplate. For electrical connection details, see "I.D. Electrical Connection." We reserve the right to make specification and design changes without prior notice.

- Visually inspect the exterior of the shipping package and immediately report any damage to the carrier. Upon opening the package, any concealed damage should also be immediately reported to the carrier.
- Remove the shipping carton, tape, and packing material. Also remove the protective plastic film from both the exterior panels and the interior drawer panel. If the appliance is exposed to the sun or to heat, remove the film after the appliance cools.
- Remove all accessory containers before discarding the packing materials. Dispose of all packing materials in a proper and environmentally responsible manner.
- Check for missing or damaged accessories.

C. Setup

1. Remove the Appliance from the Pallet

1) Move as close to the final location as possible.
2) Remove the pallet end board. See Fig. 1.
3) Remove the bolts securing the appliance to the pallet.
4) Secure the drawers so that they will not open during removal from the pallet.
5) While supporting the appliance to keep it from tipping, slide the appliance off of the pallet and lower the casters to the floor. ***NOTICE!*** **Do not allow the drawers to bear the weight of the appliance.**

Fig. 1

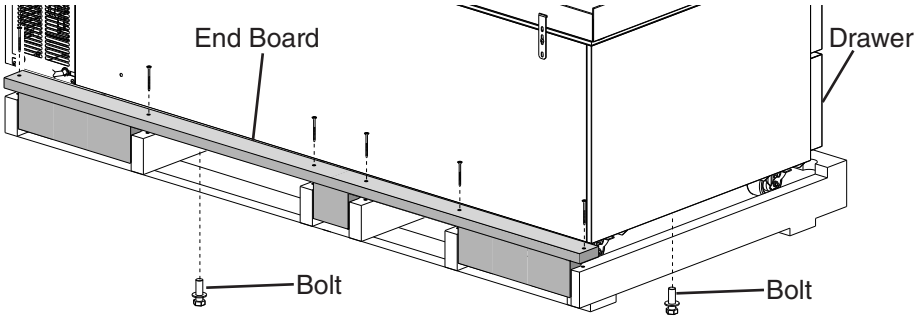

2. Check the Refrigeration Circuit

- Visually check that the refrigerant lines do not rub or touch other lines or surfaces and that the condenser fan blade turns freely.
- Check that the compressor is snug on all mounting pads.

3. Position the Appliance and Lock All Casters

All casters on the appliance are lockable. After positioning the appliance in its final location, lock all casters.

D. Electrical Connection

⚠ WARNING

- Electrical connection must meet national, state, and local electrical code requirements. Failure to meet these code requirements could result in death, electric shock, serious injury, fire, or severe damage to equipment.
- The appliance requires an independent power supply of proper capacity. See the nameplate for electrical specifications. Failure to use an independent power supply of proper capacity can result in a tripped breaker, blown fuse, damage to existing wiring, or component failure. This could lead to heat generation or fire.
- **THE APPLIANCE MUST BE GROUNDED.** The appliance is equipped with a NEMA 5-15 three-prong grounding plug to reduce the risk of potential shock hazards. It must be plugged into a properly grounded, independent 3-prong wall outlet. If the outlet is a 2-prong outlet, it is your personal responsibility to have a qualified electrician replace it with a properly grounded, independent 3-prong wall outlet. Do not remove the ground prong from the power cord and do not use an adapter plug. Failure to follow these instructions may result in death, electric shock, or fire.
- To reduce the risk of electric shock, press and hold the "U" button for 1 sec. to turn the appliance off before unplugging.
- To reduce the risk of electric shock, do not touch the plug with damp hands.
- Do not use an extension cord.
- Do not use an appliance with a damaged power cord. The power cord should not be altered, jerked, bundled, weighed down, pinched, or tangled. Such actions could result in electric shock or fire. To unplug the appliance, be sure to pull the plug, not the cord, and do not jerk the cord.
- The GREEN ground wire in the factory-installed power cord is connected to the appliance. If it becomes necessary to remove or replace the power cord, be sure to connect the power cord's ground wire.

- Usually an electrical permit and services of a licensed electrician are required.
- The maximum allowable voltage variation is ±10 percent of the nameplate rating.

E. Final Checklist

1) Have the appliance and accessories been checked for shipping damage?
2) Is the appliance level? Have all casters been locked?
3) Is the appliance in a site where the ambient temperature is within 45°F to 100°F (7°C to 38°C) all year around?
4) Have the shipping carton, tape, and packing material been removed from the appliance? Has the protective plastic film been removed from both the exterior panels and the interior drawer panel?
5) Is there at least 4" (11 cm) clearance between the bottom of the cooking equipment heating element and the appliance top? Has the cooking equipment been set up per the cooking equipment manufacturer's setup procedure? Is there at least 1" (25 mm) clearance at sides? Are the factory-installed rear bumpers in place to ensure proper rear clearance?
6) Is the temperature at the appliance top 180°F (82°C) or less? Has a heat shield (supplied by others) been installed?
7) For cooking equipment on the cabinet, is the total weight equal to or less than the total maximum weight listed for your model?

Total Maximum Weight for Cooking Equipment on the Cabinet		
CR36A, CR49A, CR60A	**CR72A, CR78A, CR85A**	**CR98A, CR110A**
700 lb. (318 kg)	1,200 lb. (544 kg)	1,500 lb. (680 kg)

8) Has the power supply voltage been checked or tested against the nameplate rating? Is the power supply a properly grounded, independent wall outlet? Does the electrical connection meet all national, state, and local code and regulation requirements?
9) Is the compressor snug on all mounting pads? Have the refrigerant lines been checked to make sure they do not rub or touch other lines or surfaces? Has the condenser fan blade been checked to make sure it turns freely?
10) Are all components and fasteners securely in place?
11) Has the end user been given the instruction manual, and instructed on how to operate the appliance and the importance of the recommended periodic maintenance?
12) Has the end user been given the name and telephone number of an authorized service agent?
13) Has the warranty card been filled out and forwarded to the factory for warranty registration?

II. Operating Instructions

A. Important Notes About Usage

⚠ DANGER

Risk of Fire or Explosion

Flammable Refrigerant Used

- Do not use mechanical devices to defrost.
- Do not puncture refrigerant tubing. Risk of fire or explosion due to puncture of refrigerant tubing; follow handling instructions carefully.
- Do not place any potential ignition sources in or near the appliance.

Risque De Feu Ou D'Explosion

Le Frigorigène Est Inflammable

- Ne pas utiliser d'appareils mécaniques pour dégivrer le réfrigérateur.
- Ne pas perforer la tubulure contenant le frigorigène. Risque de feu ou d'explosion si la tubulure contenant le frigorigène est perforée; suivre les instructions de manutention avec soin.
- Ne placez aucune source d'inflammation potentielle dans ou près de l'appareil.

⚠ WARNING

- Only qualified service technicians should install and service the appliance.
- Wear appropriate personal protective equipment (PPE) when servicing the appliance.
- Failure to install, operate, and maintain the appliance in accordance with this manual may adversely affect safety, performance, component life, and warranty coverage.
- To reduce the risk of electric shock, do not touch the plug with damp hands.
- Do not splash, pour, or spray water directly onto or into the appliance. This might cause short circuit, electric shock, corrosion, or failure.
- A minimum of 4" (11 cm) clearance is required between the bottom of the cooking equipment heating element and the appliance top. When setting up cooking equipment, follow the cooking equipment manufacturer's setup procedure. Temperature at the appliance top must not exceed 180°F (82°C). For optimum performance, installation of a heat shield (supplied by others) is recommended.
- For cooking equipment on the cabinet, do not exceed the total maximum weight listed for your model.

Total Maximum Weight for Cooking Equipment on the Cabinet		
CR36A, CR49A, CR60A	**CR72A, CR78A, CR85A**	**CR98A, CR110A**
700 lb. (318 kg)	1,200 lb. (544 kg)	1,500 lb. (680 kg)

- Do not load any single drawer with more than 75 lb. (34 kg) of product. Depending on the weight of product in the drawers, secure the unit as necessary to prevent it from overturning. Do not open more than one drawer at a time.

- The appliance is not intended for use by persons (including children) with reduced physical, sensory, or mental capabilities, or lack of experience and knowledge, unless they have been given supervision or instruction concerning use of the appliance by a person responsible for their safety.
- Children should be properly supervised around the appliance.
- Do not climb, stand, or hang on the appliance or drawers or allow children or animals to do so. Do not climb into the appliance or allow children or animals to do so. Death or serious injury could occur or the appliance could be damaged.
- Be careful not to pinch fingers when opening and closing the drawers or when handling food pans. Be careful when opening and closing the drawers when children are in the area.
- Open and close the drawers with care. Opening the drawers cover too quickly or forcefully may cause injury or damage to the appliance or surrounding equipment.
- Do not use combustible spray or place volatile or flammable substances in or near the appliance. They might catch fire.
- Keep the area around the appliance clean. Dirt, dust, or insects in the appliance could cause harm to individuals or damage to the equipment.
- The appliance is designed only for storage of food. Employ sanitary methods. Use for any other purposes (for example, storage of chemicals or medical supplies such as vaccine and serum) could cause deterioration of stored items.
- Do not block air inlets or outlets, otherwise cooling performance may be reduced.
- Do not tightly pack the cabinet. Allow some space between items to ensure good air flow. Also allow space between items and interior surfaces.
- Do not put warm or hot foods in the cabinet. Let them cool first, or they will raise the cabinet temperature and could deteriorate other foods in the cabinet or overload the appliance.
- All foods should be wrapped in plastic film or stored in sealed containers. Otherwise foods may dry up, pass their smells onto other foods, cause frost to develop, result in poor appliance performance, or increase the likelihood of cross-contamination. Certain dressings and food ingredients, if not stored in sealed containers, may accelerate corrosion of the evaporator, resulting in failure.
- Do not store items near air outlets. Otherwise, items may freeze up and crack or break causing a risk of injury or contamination of other food.
- All casters on the appliance are lockable. After positioning the appliance in its final location, lock all casters.

NOTICE
• Protect the floor when moving the appliance to prevent damage to the floor. • Keep ventilation openings, in the appliance enclosure or in the built-in structure, clear of obstruction. Blockage of airflow could negatively affect performance and damage the appliance. • To prevent deformation or cracks, do not spray insecticide onto the plastic parts or let them come into contact with oil. • To avoid damage to the gasket, use only the drawer handle when opening and closing. • To avoid damage to the top seal, do not lift the appliance by the top panel or remove the top panel. • Do not leave the drawers open.

B. Startup

⚠ WARNING
All parts are factory-adjusted. Improper adjustments may adversely affect safety, performance, component life, and warranty coverage.

Allow the appliance to cool down prior to loading it with food products.

1) Plug the appliance into the electrical outlet. At startup, there is a slight delay before the compressor starts. If the temperature is not displayed, press the "U" button for 1 sec. **WARNING! To reduce the risk of electric shock, do not touch the plug with damp hands.**

C. Controls and Adjustments

1. Temperature Display

The cabinet temperature is displayed on the control module. See Fig. 2.
The display is in °F. To convert from °F to °C, see "II.C.3. Changing the Temperature Display Scale (°F or °C)."

Control Module

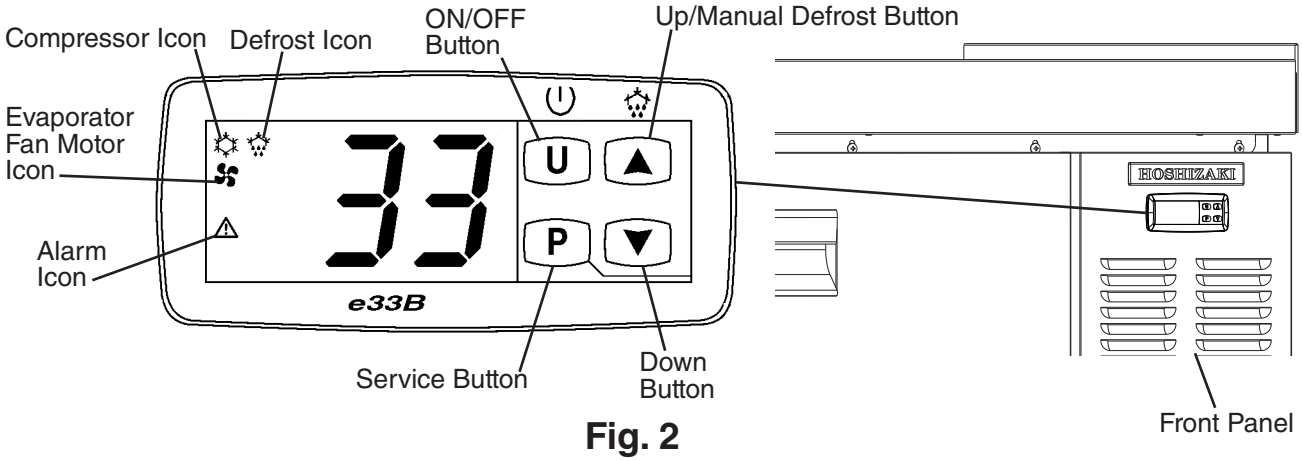

Fig. 2

2. Adjusting the Temperature Setpoint

The temperature setpoint is the value for the cabinet temperature. The temperature differential for the compressor to turn on is ±1.8°F (±1°C) of the temperature setpoint. The compressor turns off at 1.8°F below setpoint. For example, for a refrigerator temperature setpoint of 33°F (0.5°C), the compressor comes on at 34.8°F (1.5°C) and the compressor goes off at 31.2°F (-0.5°C). If necessary, adjust the temperature setpoint temperature as follows:

1) To change the temperature setpoint, press the down button briefly and then release. SP1 flashes for a few seconds, then the current temperature setpoint appears. Press the up or down button until the desired value is displayed. After 10 seconds or the "P" button is pressed, the display returns to the current cabinet temperature and the temperature setpoint is saved. ***NOTICE!*** **Do not adjust the temperature setpoint more than 2°F (1°C) at a time. Allow the temperature to stabilize for a minimum of 8 hours before making further temperature setpoint adjustments.**

Temperature Setpoint Range	Factory Default Temperature Setting
28°F to 45°F (-2°C to 7°C).	33°F (0.5°C)

3. Changing the Temperature Display Scale (°F or °C)

There are 4 temperature display settings from which to choose.
The factory temperature display default is F0 for °F whole number.
For a whole number temperature display scale value, select F0 or C0.
For a temperature display scale value to one decimal point, select F1 or C1.

Display Setting	Temperature Display Example
F0 - Factory Default	33°F
C0	1°C
F1	33.0°F
C1	1.0°C

To change the temperature display setting, follow the steps below.

1) Press the "U" and "P" buttons together for 5 seconds. ı.uP is displayed.
2) Press the "P" button. The current display setting (F0, F1, C0, or C1) and ı.uP start flashing.
3) Press the up or down button until the desired temperature display setting appears.
4) Press the "P" button to save the selection. ı.uP is displayed. To return to normal display mode, press and hold the "U" button for 5 sec. Display returns to normal display mode. If no other button is pressed after pressing the "P" button, 25 sec. later, display returns to normal display mode.
   Note: If no selection is saved within 30 seconds, the display returns to normal mode and the temperature display setting remains unchanged.

D. Control Module Icons

Control module icons inform you of energized components and if the appliance is in alarm. Note: Icons flash when component is called for during a timed lockout. Once the timer terminates, the icon goes solid and component energizes.

Control Module Icons	
Icon	**Meaning**
	Compressor Flashing: Compressor waiting for 1-min. compressor delay timer to terminate. Solid: Compressor energized.
	Defrost Flashing: Drip Time (compressor delay) Solid: Appliance is in defrost cycle. See "II.E. Defrost" for details.
	Evaporator Fan Motor Flashing: Evaporator fan motor waiting for 2-min. evaporator fan motor delay timer to terminate. Solid: Evaporator fan motor energized.
	Alarm Appliance is in alarm. See "II.F. Alarm Safeties" for details.

E. Defrost

⚠ DANGER

Risk of Fire or Explosion Flammable Refrigerant Used

- Do not use mechanical devices to defrost.
- Do not puncture refrigerant tubing. Risk of fire or explosion due to puncture of refrigerant tubing; follow handling instructions carefully.

Risque De Feu Ou D'Explosion Le Frigorigène Est Inflammable

- Ne pas utiliser d'appareils mécaniques pour dégivrer le réfrigérateur.
- Ne pas perforer la tubulure contenant le frigorigène. Risque de feu ou d'explosion si la tubulure contenant le frigorigène est perforée; suivre les instructions de manutention avec soin.

1. Automatic Defrost

Defrost is a time-initiated, temperature terminated heated defrost.

- Defrost Initiation: When the appliance is plugged in, the 6 hr. defrost timer starts. Once the 6 hr. defrost timer terminates, defrost initiates if the defrost thermistor is at or below 50°F (10°C). If the defrost thermistor is not at or below 50°F (10°C), the control module continues in cooling mode until the termination of the next 6 hr. defrost timer.
  The maximum defrost time is 1 hr.
- Defrost Termination: Once the defrost thermistor reaches 41°F (5°C), defrost terminates. If 41°F (5°C) is not achieved, defrost continues until the 1-hr. maximum timer terminates. The 6 hr. defrost timer resets once defrost terminates.
- The compressor energizes 1-min. after the defrost heater de-energizes (drip time) and the evaporator fan motor(s) energize 1 min. after the compressor energizes.
- During defrost dEF is displayed. Once defrost terminates, Pdf is displayed and the defrost icon flashes. Pdf is displayed until cabinet temperature achieves 1.8°F (1°C) above temperature setpoint. Once 1.8°F (1°C) above temperature setpoint is achieved, cabinet temperature returns to display.

2. Manual Defrost

To initiate a manual defrost, press and hold the up button for 5 seconds.
To terminate a defrost, press and hold the up button for 5 seconds.
Note: Manual defrost only initiates when evaporator temperature (defrost thermistor) is at or below 50°F (10°C).

F. Alarm Safeties

Alarm signals are designed to protect the appliance and food product. These alarms give information or warnings in the event the appliance is operating out of acceptable parameters. Should one of the alarms occur, follow the instructions in the table below to address the alarm. The alarm code and alarm icon flash with audible alarm.

Alarm Signals		
Alarm Code	**Problem**	**Corrective Action/Reset Details**
(-)E1	Cabinet Thermistor Malfunction Alarm Cabinet thermistor has failed.	Call a qualified service technician. Steady tone. To silence the alarm, press and release any button. Appliance cycles 5 min. on, 5 min. off. -E1 - Cabinet thermistor out of place or open. E1 - Cabinet thermistor shorted.
(-)E2	Defrost Thermistor Malfunction Alarm Defrost thermistor has failed.	Call a qualified service technician. Steady tone. To silence the alarm, press and release any button. Appliance cycles 5 min. on, 5 min. off. -E2 - Defrost thermistor out of place or open. E2 - Defrost thermistor shorted.
Hi	High Temperature Alarm Cabinet temperature has remained above 57°F (13.9°C) for more than 1 hour.	If obvious corrections such as closing drawers and cleaning the air filter and/or condenser do not bring temperature back in range, call a qualified service technician. Steady tone. To silence the alarm and clear "Hi" from the display, press and release any button. The alarm icon stays on. Automatically resets when temperature returns to normal.
Lo	Low Temperature Alarm Cabinet temperature has remained below 20°F (-6.6°C) for more than 1 hour.	If obvious corrections do not bring the temperature back in range, call a qualified service technician. Steady tone. To silence the alarm and clear "Lo" from the display, press and release any button. The alarm icon stays on. Automatically resets when temperature returns to normal.
UHi	High Voltage Alarm (140VAC±5% or more)	Call a qualified service technician. The compressor de-energizes if voltage protection operates. The voltage safeties automatically reset when voltage is corrected.
ULo	Low Voltage Alarm (100VAC±5% or less)	

G. Food Storage

⚠ WARNING

- The appliance is designed only for storage of food. Employ sanitary methods. Use for any other purposes (for example, storage of chemicals or medical supplies such as vaccine and serum) could cause deterioration of stored items.
- Do not block air inlets or outlets, otherwise cooling performance may be reduced.
- Do not tightly pack the cabinet. Allow some space between items to ensure good air flow. Also allow space between items and interior surfaces.
- Do not put warm or hot foods in the cabinet. Let them cool first, or they will raise the cabinet temperature and could deteriorate other foods in the cabinet or overload the appliance.
- All foods should be wrapped in plastic film or stored in sealed containers. Otherwise foods may dry up, pass their smells onto other foods, cause frost to develop, result in poor appliance performance, or increase the likelihood of cross-contamination. Certain dressings and food ingredients, if not stored in sealed containers, may accelerate corrosion of the evaporator, resulting in failure.
- Do not store items near air outlets. Otherwise, items may freeze up and crack or break causing a risk of injury or contamination of other food.

H. Safety Devices

1. Compressor External or Internal Overload

If combined temperature/amperage value is above the limit specified by the compressor manufacturer, the compressor overload operates independently to turn off the compressor. The compressor overload de-energizes the compressor until the temperature/amperage value returns to an acceptable level.

2. Short-Cycle Protection

There is a 2-minute minimum off-time and on-time for the compressor.

Note: Time may vary with compressor overload or high-pressure switch activation.

3. High-Pressure Switch

If high-side refrigeration pressure exceeds Hoshizaki specifications, the high-pressure switch activates and de-energizes the compressor circuit until the refrigeration pressure returns to an acceptable level.

I. Cooling Performance

Be sure the appliance is properly installed and located for optimum cooling performance. If cooling performance is not at its optimum level, check the following items:

- Drawers opened too often.
- Drawers left open. Close.
- Cabinet too tightly packed or air inlets/outlets blocked. Allow some space between items to ensure good air flow.
- Warm or hot foods inside. Take them out until they cool down more.
- Ambient temperature too high. Avoid installation near high heat producing equipment or exposure to direct sunlight.
- Not enough clearance. Ensure a minimum of 4" (11 cm) clearance between the bottom of the cooking equipment heating element and the appliance top. Ensure cooking equipment is set up per the cooking equipment manufacturer's setup procedure. Ensure a minimum of 1" (25 mm) clearance at sides.
- Temperature at the appliance top too high. Ensure the temperature at the appliance top does not exceed 180°F (82°C). For optimum performance, installation of a heat shield (supplied by others) is recommended.
- Temperature setpoint not cold enough. Adjust to a colder setting. See "II.C.2. Adjusting the Temperature Setpoint" for details.
- Appliance in defrost cycle. The cabinet temperature may rise temporarily during the defrost cycle, but this will not affect the food inside.

J. Cabinet Condensation

In the event condensation develops on the cabinet exterior, check the following items:

- Drawers left open. Close.
- Ambient humidity too high. In high humidity areas it may be necessary to wipe off the cabinet frame occasionally.

III. Cleaning and Maintenance Instructions

A. Cleaning

⚠ WARNING

- Press and hold the "U" button for 1 sec. to turn the appliance off. Unplug the appliance before cleaning to prevent electric shock by unexpected entrance of water into the appliance or injury by moving parts. To reduce the risk of electric shock, do not touch the plug with damp hands.
- Risk of electric shock. Appliance in the off position does not de-energize all loads. Use extreme caution and exercise safe electrical practices.
- Before cleaning the appliance, move all foods into another clean refrigerator.
- Before cleaning the appliance, disconnect any cooking equipment on the appliance top and allow to cool.
- Do not splash, pour, or spray water directly onto or into the appliance. This might cause short circuit, electric shock, corrosion, or failure.
- Carefully follow instructions provided with cleaning and sanitizing products.

NOTICE

- To prevent damage to the plastic surfaces, do not use the following: hot water, thinner, benzine, alcohol, petroleum, soap powder, polishing powder, alkaline cleaner, acid, scouring pad and especially those strong cleaners for use on a ventilating fan or a cooking range.
- To prevent corrosion and damage to stainless steel surfaces, use only products formulated for use on stainless steel appliances. Do not use steel wool, abrasive products, or products containing sodium hypochlorite (chlorine bleach).
- Use a clean cloth for cleaning.

1. Exterior

Wipe the exterior occasionally with a clean, soft cloth. Use a damp cloth containing a neutral cleaner to wipe off oil or dirt buildup. Clean any rust colored spots using a non-abrasive cleanser.

2. Cabinet Interior

Spills should be wiped up promptly to avoid unpleasant odors. The cabinet interior should be cleaned periodically with a mild soap or detergent and warm water.

3. Drawer Gaskets

Drawer gaskets should be cleaned regularly with mild soap and warm water to remove dirt and grease.

4. Drawers

Drawers and drawer slides are removable.

- **To remove a drawer:** Remove all items from the drawer. Pull the drawer out to its fully extended position. Open the safety clips (one on each side) by sliding them forward. See Fig. 3. Lift up on the handle slightly, then pull to disengage the drawer. Be sure to support the rear and front of the drawer while removing it. **WARNING! Be sure to close the safety clips when reinstalling the drawer.**
- **To remove a drawer slide (center slide containing rollers):** Open the stop levers (one on each side) by sliding them to the rear. See Fig. 4. Lift up on the drawer slide slightly, then pull to disengage the drawer slide. **WARNING! Be sure to close the stop levers when reinstalling the drawer.** Drawer slides do not require lubrication, but drawer slides should be kept clean and free of food.

Note: Drawer slides are dishwasher safe.

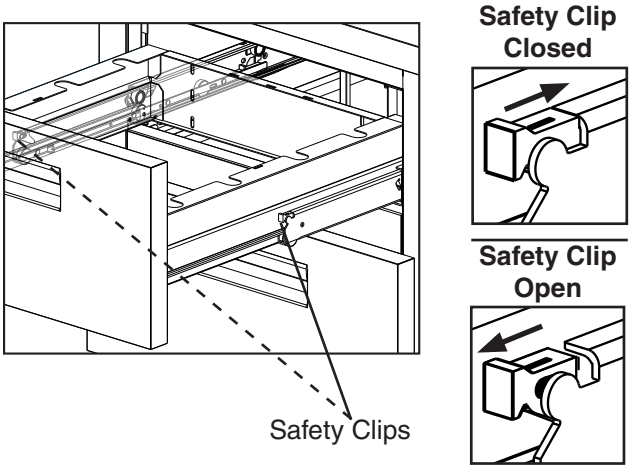

Fig. 3

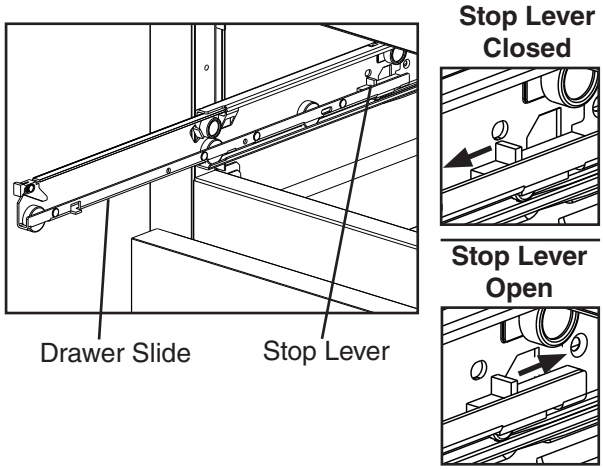

Fig. 4

B. Maintenance

⚠ WARNING

- Press and hold the "U" button for 1 sec. to turn the appliance off. Unplug the appliance before performing maintenance to prevent electric shock or injury by moving parts. To reduce the risk of electric shock, do not touch the plug with damp hands.
- Risk of electric shock. Appliance in the off position does not de-energize all loads. Use extreme caution and exercise safe electrical practices.
- Before performing maintenance, move all foods into another clean refrigerator.
- Before performing maintenance, disconnect any cooking equipment on the appliance top and allow to cool.

1. Condenser

Check the condenser twice a year and use a brush or vacuum cleaner to clean the condenser as required.

2. Power Supply Connection

If the plug or power cord is damaged, contact your local Hoshizaki service representative or local Hoshizaki distributor immediately and ask for repairs.

All other maintenance or service on the appliance should be performed in accordance with the Hoshizaki Service Manual by a qualified service technician.

IV. Preparing the Appliance for Periods of Non-Use

When shutting down the appliance for more than one week, follow the instructions below.

⚠ WARNING

- When preparing the appliance for long storage, prevent the drawers from closing to reduce the risk of children getting trapped.
- Risk of electric shock. Appliance in the off position does not de-energize all loads. Use extreme caution and exercise safe electrical practices.
- To reduce the risk of electric shock, do not touch the plug with damp hands.

NOTICE

When preparing the appliance for long storage, clean the appliance. See "III.A. Cleaning" for details.

1) Before shutting down the appliance, move all foods into another clean refrigerator.
2) Press and hold the "U" button for 1 sec. to turn the appliance off. Unplug the appliance.

V. Disposal

⚠ DANGER

Risk of Fire or Explosion Flammable Refrigerant Used

- Follow handling instructions carefully in compliance with U.S. government regulations.
- Do not puncture refrigerant tubing. Risk of fire or explosion due to puncture of refrigerant tubing; follow handling instructions carefully.
- Dispose of properly in accordance with federal or local regulations.

Risque De Feu Ou D'Explosion Le Frigorigène Est Inflammable

- Suivre attentivement les instructions de manipulation conformément à la réglementation gouvernementale.
- Ne pas perforer la tubulure contenant le frigorigène. Risque de feu ou d'explosion si la tubulure contenant le frigorigène est perforée; suivre les instructions de manutention avec soin.
- Éliminer conformément aux règlements fédéraux ou locaux.

⚠ WARNING

When preparing the appliance for disposal, remove the drawers to reduce the risk of children getting trapped.

The appliance contains refrigerant and must be disposed of in accordance with applicable national, state, and local codes and regulations. Refrigerant must be recovered by properly certified service personnel.

HOSHIZAKI AMERICA, INC.

618 Hwy. 74 South, Peachtree City, GA 30269 USA (P) 770.487.2331 (F) 770.487.3360 hoshizakiamerica.com 1A6672-010

R0007

CONVOTHERM®
A Welbilt Brand

Convotherm maxx pro
high definition

Combi Oven

Convotherm maxx pro

C4 table-top models

Installation Manual UL, USA - Original, ENG

Advancing Your Ambitions

FOR THE INSTALLER, OPERATOR, RESPONSIBLE OWNER

FOR YOUR SAFETY
Do not store or use gasoline or other flammable vapors or liquids in the vicinity of this or any other unit.

	WARNING
	Improper installation, adjustment, alteration, service or maintenance can cause property damage, injury and death. Read the installation, operating and maintenance instructions thoroughly before installing or servicing this equipment.

	WARNING
	Disconnect power at the main external power switch before servicing or repairing a combi oven.

	WARNING
	To reduce the risk of electric shock, do not remove or open cover. No user serviceable parts inside. Refer servicing to qualified personnel. Disconnect power supply before servicing.
	AVERTISSEMENT
	Afin de réduire le risque d'électrocution, ne pas retirer ou ouvrir le capot. Aucune pièce réparable ne se trouve à l'intérieur. Confier le dépannage à du personnel qualifié. Débrancher l'alimentation électrique avant réparation.

IMPORTANT

IT IS COMPULSORY TO POST INSTRUCTIONS WHICH ARE TO BE FOLLOWED IN THE EVENT THE USER SMELLS GAS. THESE INSTRUCTIONS MUST BE LOCATED IN A PROMINENT LOCATION, AND BE FULLY UNDERSTOOD BY ALL USERS OF THIS EQUIPMENT. THIS INFORMATION NEED TO BE OBTAINED FROM YOUR LOCAL GAS SUPPLIER.

ALL SERVICE MUST BE PERFORMED BY A QUALIFIED CONVOTHERM-BRAND AUTHORIZED TECHNICIAN.

KEEP AREA FREE AND CLEAR OF COMBUSTIBLES.

Installation

- Installation of this unit must be done by a licensed professional when installed in the Commonwealth of Massachusetts.
- The wiring diagram is located on the inner part of the side panel.

Customer documentation

- The customer documentation is part of the combi oven.
- Keep the customer documentation manuals handy at all times so that you can look up any required information.
- Keep the customer documentation manuals for the entire life of the unit.
- Carefully read the installation manual, the operating manual, and the operating instructions before using, handling, and working on this unit.
- If you transfer the combi oven to a new owner, make sure to give the new owner the customer documentation manuals as well.

Table of Contents

1 General 7

1.1 Environmental Protection 7
1.2 Identifying Your Combi Oven 8
1.3 Customer Documentation Structure 10
1.4 About This Installation Manual 10
1.5 Safety Information That Must Be Read without Exception 11

2 Configuration and Functions 12

2.1 The Combi Oven's Configuration and Functions 12
2.2 Operating Panel Layout and Functions 15

3 For Your Safety 16

3.1 Basic Safety Instructions 16
3.2 Your Combi Oven's Intended Use 18
3.3 Warning Labels on the Combi Oven 20
3.4 Hazards posed by the unit 22
3.5 Safety Devices 25
3.6 Staff and Work Area Requirements 27
3.7 Personal protective equipment 29

4 Transportation 30

4.1 Transporting the unit to the installation location 30
4.2 Preparing for Unpacking 30
4.3 Included equipment and parts 31

5 Setup 32

5.1 Adjacent Systems 32
5.2 Installation location requirements 33
5.3 Removing the unit from the pallet 38
5.4 Setting up the unit on a work table 39
5.5 Setting Up the Unit on a Stand 41
5.6 Setting Up Units in a Stacking Kit 42

6 Installation 43

6.1 Electrical installation 43
6.1.1 Planning the Electrical Installation 43
6.1.2 Performing the Electrical Installation 45
6.1.3 Connecting an Energy Optimization System (for Electrical Units Only) 46
6.1.4 Connecting the Signal Tower 48
6.1.5 Connecting the Water Treatment Filter Monitoring System 50
6.2 Gas Installation 52
6.2.1 Planning the Gas Installation 52
6.2.2 Forced Air Burner and Gas Main Valve Locations 54
6.2.3 Performing the Gas Installation 55
6.2.4 Measuring the Supply Flow Pressure 56
6.2.5 Measuring the Exhaust Gas Values 57
6.3 Network Connection 58
6.3.1 Planning the Network Connection 58
6.3.2 Making the Network Connection 59
6.4 Water connections 60

6.4.1 Water supply 60
6.4.2 Checking the water quality 63
6.4.3 Drain Connection 64
6.5 Installing the fully automatic oven cleaning system 65
6.5.1 Components of Fully Automatic Oven Cleaning System 65
6.5.2 Connecting the Fully Automatic Cleaning System 67
6.6 Installing the Grease Collection Canister 69
6.6.1 Connecting the Grease Collection Canister 69

7 Placing into operation 70

7.1 Working Safely When Putting the Unit Into Operation 70
7.2 Procedure for Placing the Unit into Operation 71
7.3 Measuring unit gaps 74

8 Removing from Service and Disposal 75

8.1 Removing from Service and Disposal 75

9 Technical data 76

9.1 Dimensions and weights 76
9.2 Maximum permissible loading weight 78
9.3 EB/ES Electrical Supply 79
9.4 GB/GS Electrical Supply 83
9.5 Gas Characteristic Values for Natural Gas (USA), Propane (USA) 84
9.6 Heat loss 85
9.7 Water connections 85
9.8 Water quality 86
9.9 Boiler 87
9.10 Water consumption during cooking 87
9.11 Water consumption during cooking and cleaning 88

10 Connection drawings 89

10.1 Convotherm 4 6.10 Electrical units 89
10.2 Convotherm 4 6.10 Gas Unit with Boiler 91
10.3 Convotherm 4 6.10 Gas Unit with Sprayer 93
10.4 Convotherm 4 6.20 Electrical units 95
10.5 Convotherm 4 6.20 Gas Unit with Boiler 97
10.6 Convotherm 4 6.20 Gas Unit with Sprayer 99
10.7 Convotherm 4 10.10 Electrical units 101
10.8 Convotherm 4 10.10 Gas Unit with Boiler 103
10.9 Convotherm 4 10.10 Gas Unit with Sprayer 105
10.10 Convotherm 4 10.20 Electrical units 107
10.11 Convotherm 4 10.20 Gas Unit with Boiler 109
10.12 Convotherm 4 10.20 Gas Unit with Sprayer 111

1 General

1.1 Environmental Protection

Policy statement

Our customers' expectations, the legal regulations and standards we have to follow, and our company's reputation are what drives the quality and service behind all our products.

Our environmental management policy is not only designed to ensure that we are always in full compliance with all environmental laws and regulations, but also reflects our commitment to the environment and to continuously improving our performance in this field.

In order to ensure that we meet all of our environmental goals while maintaining the high quality of our products, and that things stay this way, we have developed a quality and environmental management system.

This system meets the requirements set forth in ISO 9001:2015 and ISO 14001:2015.

Environmental protection measures

The following measures apply to this product:

- Uses fully compostable packing products
- Uses RoHS-compliant products
- Complies with the REACH regulation
- Recommends and uses biodegradable cleaning agents
- E-waste recycling
- Environmentally friendly disposal of old units through the manufacturer

Join us in our commitment to protecting the environment!

1.2 Identifying Your Combi Oven

Nameplate location

The nameplate is found on the left side of the combi oven.

Nameplate layout and structure for electrical units

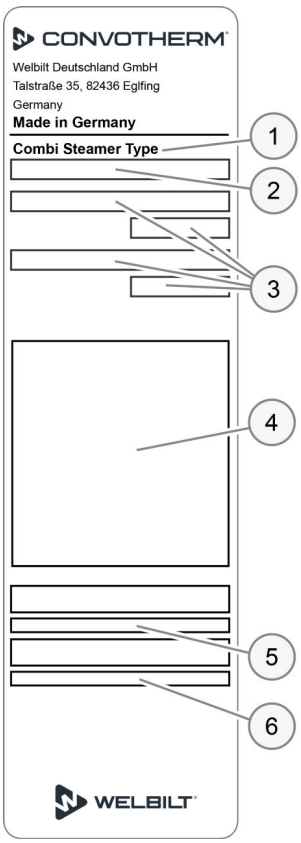

No.	Designation	
1	**Unit name** Combi Steamer	
2	**Trade name**	
	Letters	Meaning
	C4	Convotherm maxx pro line of units
	eT	easyTouch controls
	eD	easyDial controls
	xx.yy numbers	Unit size
	EB	Electrical units with boiler
	ES	Electrical units with water injection
	-N	On units with NSF certification
3	**Electrical specifications**	
4	**Marks**	
5	**Serial number**	
	Letters	Meaning
	Heating method	Electrical unit (V)
	Steam generation method	▪ Sprayer (S) ▪ Boiler (B)
	Unit size	▪ 6.10 (1) ▪ 6.20 (2) ▪ 10.10 (3) ▪ 10.20 (4)
	Year of manufacture	▪ 2021 (21) ▪ 2022 (22) ▪ ...
	Month of manufacture	▪ January (01) ▪ February (02) ▪ March (03) ▪ ...
	Consecutive number	4-digit
6	**Item number**	

Nameplate layout and structure for gas units

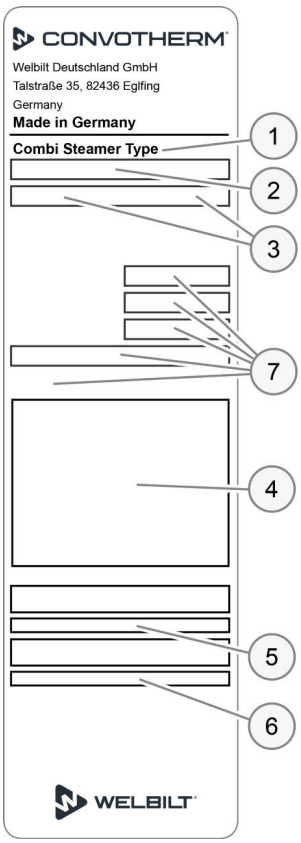

No.	Designation	
1	**Unit name** Combi Steamer	
2	**Trade name**	
	Letters	Meaning
	C4	Convotherm maxx pro line of units
	eT	easyTouch controls
	eD	easyDial controls
	xx.yy numbers	Unit size
	GB	Gas unit with boiler
	GS	Gas unit with water injection
	-N	On units with NSF certification
3	**Electrical specifications**	
4	**Marks**	
5	**Serial number**	
	Letters	Meaning
	Heating method	Gas unit (W)
	Steam generation method	▪ Sprayer (S) ▪ Boiler (B)
	Unit size	▪ 6.10 (1) ▪ 6.20 (2) ▪ 10.10 (3) ▪ 10.20 (4)
	Year of manufacture	▪ 2021 (21) ▪ 2022 (22) ▪ ...
	Month of manufacture	▪ January (01) ▪ February (02) ▪ March (03) ▪ ...
	Consecutive number	4-digit
6	**Item number**	
7	**Gas specifications**	

1.3 Customer Documentation Structure

Unit documentation parts

Document type	Contents
Installation manual	▪ Describes how to transport, set up, install, and put the unit into operation ▪ Goes over all the hazards involved in the various installation activities and how to prevent and/or counter them ▪ Contains technical specifications
Operating manual	▪ Describes the work sequences and operating steps when cooking and cleaning ▪ Includes the maintenance schedule and troubleshooting information ▪ Goes over all the hazards involved when operating the unit and how to prevent and/or counter them
Operating instructions	▪ Describes the unit's user interface ▪ Includes the instructions for using the software

Documentation for accessories

For information on how to install accessories (e.g., recoil hand shower, hood, stand on casters, stacking kit), please refer to the corresponding instructions for accessories.

1.4 About This Installation Manual

Target groups

Name of target group	Tasks
Person placing the unit into operation (service technician)	▪ Responsible overall for placing the combi oven into operation ▪ Briefing the user
Store manager Person authorized to give orders in the kitchen area	▪ Briefed on all of the combi oven's safety-relevant functions, mechanisms, and devices by the person placing the unit into operation ▪ Shown how the unit is operated by the person placing the unit into operation ▪ If necessary, helping out as directed with transportation within the facilities and with setting up the unit
Mover	Transporting the unit within the facilities
Service technician	▪ Setting up the unit ▪ Installing the fully automatic oven cleaning system ▪ Placing the unit into operation and removing it from service
Electrician	▪ Connecting the unit to the electrical connection at the facilities ▪ Uninstalling electrical connections
Water and wastewater installer	▪ Connecting the unit to the water connection at the facilities ▪ Uninstalling water connections ▪ Connecting the unit to the drain connection at the facilities ▪ Uninstalling the drain connection
Gas technician	Installing and uninstalling gas connections

Decimal mark used

In order to ensure that all numbers can be properly understood internationally, a decimal point is always used.

1.5 Safety Information That Must Be Read without Exception

Safety information found in the documentation for the customer

Only the installation manual and operating manual provide safety information for the combi oven.

The installation manual provides safety information for the transportation, setup, installation, placing-into-operation, and removal-from-service tasks it describes.

The operating manual provides safety information for the cooking, cleaning, and maintenance tasks it describes.

When using the operating instructions, the operating manual or installation manual should always be consulted in order to obtain the relevant safety information. When performing activities that go beyond simply using the software, the safety information in the operating manual and installation manual must always be observed.

Parts of this document that must be read without exception

Failure to take the information in this document into account may result in death, injury, or property damage.

In order to ensure their safety and the safety of others, everyone working with/on the combi oven must read and understand the following parts of this document before starting any work:

- The 'For Your Safety' on page 16 section
- The sections describing the work that will be carried out

Danger symbol

Danger symbol	Meaning
⚠	Used to warn of potential injury. Observe all the precautionary statements following this symbol in order to avoid injury or death.

Precautionary statements

The precautionary statements in this manual are categorized using the following hazard levels:

Hazard level	Consequences	Likelihood
⚠DANGER	Death / severe injury (irreversible)	Imminent
⚠WARNING	Death / severe injury (irreversible)	Potential
⚠CAUTION	Minor injury (reversible)	Potential
NOTICE	Property damage	Potential

2 Configuration and Functions

2.1 The Combi Oven's Configuration and Functions

Parts and functions (electrical units)

The figure below shows a size 6.10 combi oven used as an example representing all electrical models:

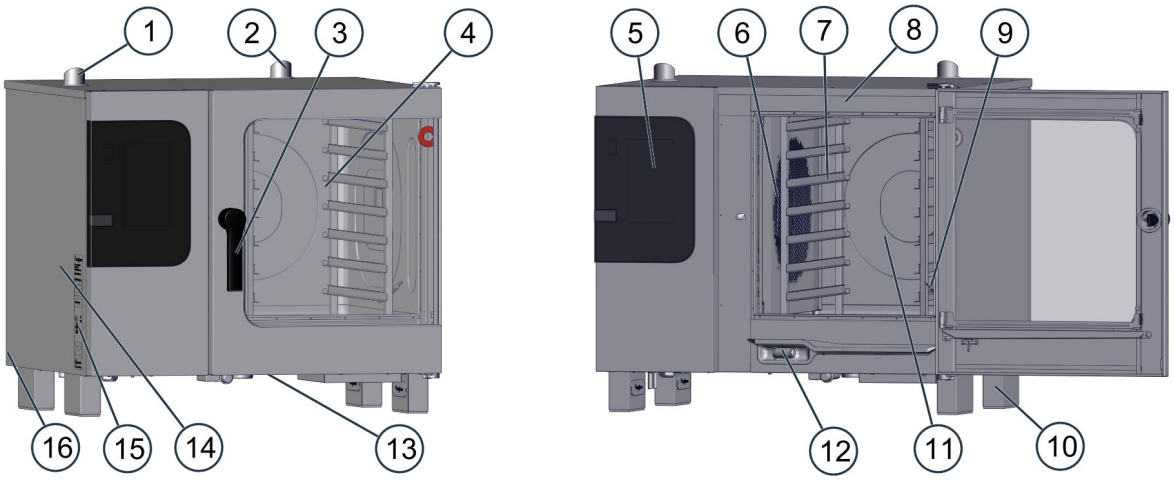

No.	Designation	Function
1	Ventilation port	▪ Draws in ambient air in order to remove moisture from the oven cavity ▪ Compensates for pressure fluctuations inside the oven cavity
2	Air vent	Lets hot steam escape
3	Door handle	▪ Used to open and close the unit door ▪ Cracked-open position for safely opening the unit ("safety lock") ▪ Closing-shut function ▪ Antibacterial material with silver ions ("HygieniCare")
4	Unit door	▪ Seals the oven cavity ▪ When opened, it can be slid backwards along the unit's side in order to save space ("disappearing door") (optional)
5	Control panel	▪ Used to operate the unit ▪ Antibacterial ("HygieniCare")
6	Suction panel	▪ Used to distribute heat uniformly within the oven cavity ▪ Separates the fan compartment from the oven cavity
7	Rack	Used to hold standard-size bakeware
8	Camera (not shown)	Recognizes the food to be cooked together with the ConvoSense assistance system (optional)
9	Core temperature probe, sous vide probe (optional)	▪ Used to measure the food's internal temperature ▪ Available as an internal version that is permanently connected inside the oven and/or as an external version that can be temporarily connected
10	Unit feet	Are height-adjustable so as to make it possible to level the unit
11	Oven cavity	Is where food is placed while it is being cooked
12	Recoil hand shower (not included in certain units)	▪ Meant exclusively for rinsing the oven cavity with water ▪ Is retracted automatically into its holder after being used ▪ Antibacterial ("HygieniCare")
13	Vents at the bottom of the unit	▪ Used to ventilate the unit ▪ Must not be blocked

No.	Designation	Function
14	Side panel	Covers the unit's wiring compartment
15	Nameplate	Used to identify the unit
16	Network connection	Used to connect to a network or the cloud.

Parts and functions (gas units)

The figure below shows a size 6.10 combi oven used as an example representing all gas models:

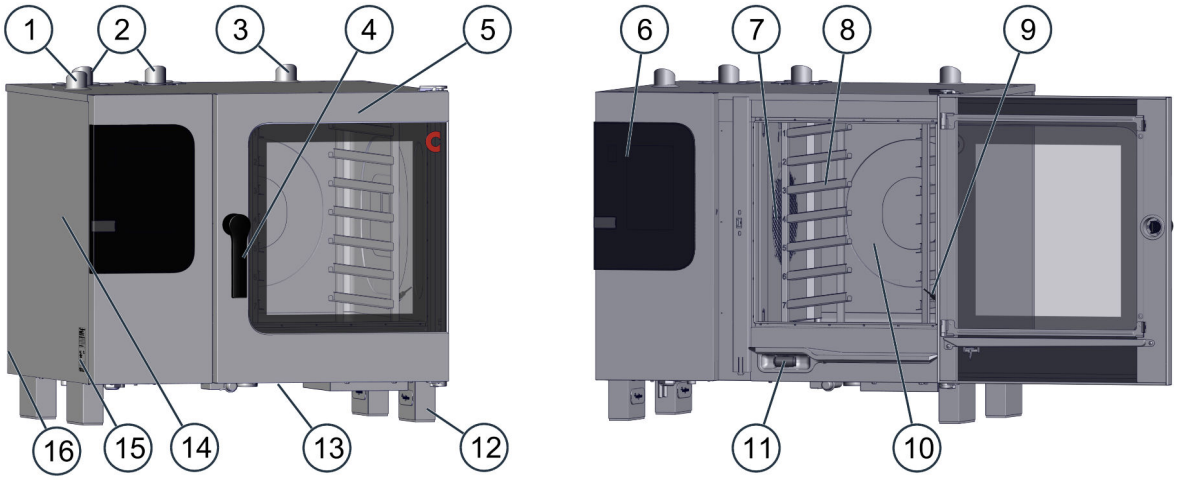

No.	Designation	Function
1	Ventilation port	▪ Draws in ambient air in order to remove moisture from the oven cavity ▪ Compensates for pressure fluctuations inside the oven cavity
2	Exhaust outlet	Discharges hot exhaust gases
3	Air vent	Lets hot steam escape
4	Door handle	▪ Used to open and close the unit door ▪ Cracked-open position for safely opening the unit ("safety lock") ▪ Closing-shut function ▪ Antibacterial material with silver ions ("HygieniCare")
5	Unit door	▪ Seals the oven cavity ▪ When opened, it can be slid backwards along the unit's side in order to save space ("disappearing door") (optional)
6	Control panel	▪ Used to operate the unit ▪ Antibacterial ("HygieniCare")
7	Suction panel	▪ Used to distribute heat uniformly within the oven cavity ▪ Separates the fan compartment from the oven cavity
8	Rack	Used to hold standard-size bakeware
9	Core temperature probe, sous vide probe (optional)	▪ Used to measure the food's internal temperature ▪ Available as an internal version that is permanently connected inside the oven and/or as an external version that can be temporarily connected
10	Oven cavity	Is where food is placed while it is being cooked
11	Recoil hand shower (not included in certain units)	▪ Meant exclusively for rinsing the oven cavity with water ▪ Is retracted automatically into its holder after being used ▪ Antibacterial ("HygieniCare")
12	Unit feet	Are height-adjustable so as to make it possible to level the unit
13	Vents at the bottom of the unit	▪ Used to ventilate the unit ▪ Must not be blocked

No.	Designation	Function
14	Side panel	Covers the unit's wiring compartment
15	Nameplate	Used to identify the unit
16	Network connection	Used to connect to a network or the cloud.

Parts and functions for special locking feature (security model only)

The figure below shows a special locking feature for enhanced security on a size 6.10 combi oven used as an example representing all unit sizes:

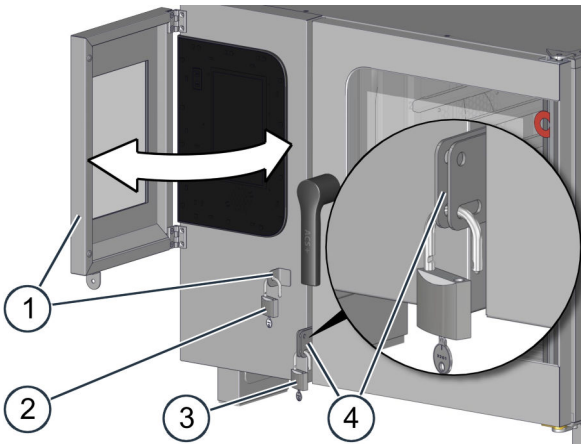

No.	Designation	Function
1	Lockable operating panel cover	The cover can be swung in and secured onto the unit case so that it covers the operating panel, preventing unauthorized users from operating the combi oven.
2	Padlock	▪ Used to secure the operating panel cover onto the unit case ▪ Not included
3	Padlock	▪ Used to secure the unit door onto the unit case ▪ Not included
4	Unit door hasp	Features two different slots that can be used to lock the unit door in order to prevent unauthorized users from opening and closing it Unit door action: ▪ If the unit door is locked using the upper slot, the door will always be fully closed. ▪ If the unit door is locked using the lower slot, it will be possible to open the door all the way to the cracked-open position

Material

The unit's inner and outer parts are made of stainless steel.

2.2 Operating Panel Layout and Functions

Control panel layout and parts in easyTouch

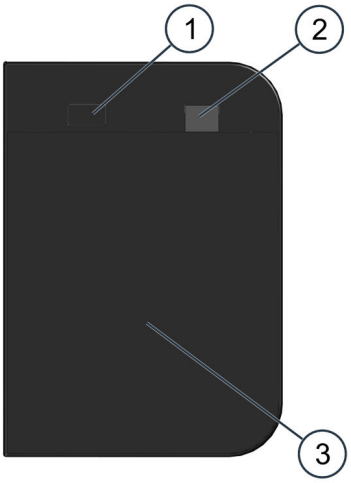

No.	Designation	Function
1	Unit ON/OFF switch	Used to turn the combi oven on and off
2	USB port	Used to plug in a USB stick
3	Full-touch display	The unit's central control interface ▪ Used by touching the icons on the full-touch display ▪ Status indicators

Operating panel layout and parts in easyDial

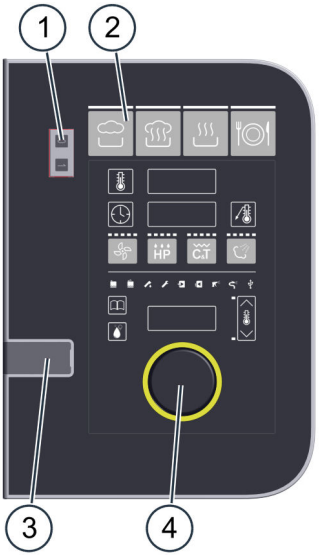

No.	Designation	Function
1	Unit ON/OFF switch	Used to turn the combi oven on and off
2	Control panel	The unit's central control interface ▪ Buttons used to enter cooking programs ▪ Displays used to indicate configured values ▪ Prompt indicators for the operator
3	USB port	Used to plug in a USB stick
4	C-Dial	Used to set cooking parameters by turning and pressing the encoder.

9 Technical data

9.1 Dimensions and weights

C4 EB/ES dimensions

		6.10	6.20	10.10	10.20
Unit **with** packaging					
Width	[in]	44.1	53.7	44.1	53.7
Height	[in]	41.3	41.3	52.0	52.0
Depth	[in]	37.8	45.7	37.8	45.7
Unit **without** packaging					
Width of units featuring a right-hinged door	[in]	34.45	44.09	34.45	44.09
Width of units with a disappearing door, incl. guide bracket	[in]	38.03	47.67	38.03	47.67
Height	[in]	30.94	41.65	30.94	41.65
Depth when the unit door is closed	[in]	31.18	39.06	31.18	39.06
Safety clearances					
Rear	[in]	2	2	2	2
Right-hand side (units featuring a right-hinged door)	[in]	2	2	2	2
Right-hand side (units featuring a disappearing door)	[in]	2	2	2	2
Left-hand side (larger gap recommended for servicing)	[in]	2	2	2	2
Above (for ventilation)	[in]	20	20	20	20

C4 GB/GS dimensions

		6.10	6.20	10.10	10.20
Unit **with** packaging					
Width	[in]	44.1	53.7	44.1	53.7
Height	[in]	41.3	41.3	52.0	52.0
Depth	[in]	37.8	45.7	37.8	45.7
Unit **without** packaging					
Width of units featuring a right-hinged door	[in]	34.45	44.09	34.45	44.09
Width of units with a disappearing door, incl. guide bracket	[in]	38.03	47.67	38.03	47.67
Height	[in]	30.94	30.94	41.65	41.65
Depth when the unit door is closed	[in]	31.18	39.06	31.18	39.06
Safety clearances					
Rear	[in]	2	2	2	2
Right-hand side (units featuring a right-hinged door)	[in]	2	2	2	2
Right-hand side (units featuring a disappearing door)	[in]	2	2	2	2
Left-hand side (larger gap recommended for servicing)	[in]	2	2	2	2
Above (for ventilation)	[in]	39	39	39	39

C4 EB weights

		6.10	6.20	10.10	10.20
Weight without packaging					
without ConvoClean / ConvoClean+					
- Right-hinged door	[lbs]	262	322	282	423
- Disappearing door	[lbs]	280	340	304	445
with ConvoClean / ConvoClean+					
- Right-hinged door	[lbs]	276	335	295	437
- Disappearing door	[lbs]	293	353	317	459
Packaging weight					
Packaging weight	[lbs]	55	77	62	84

C4 ES weights

		6.10	6.20	10.10	10.20
Weight without packaging					
Without ConvoClean / ConvoClean+, without ConvoSmoker					
- Right-hinged door	[lbs]	240	295	256	390
- Disappearing door	[lbs]	258	313	273	412
With ConvoClean / ConvoClean+, without ConvoSmoker					
- Right-hinged door	[lbs]	254	309	269	403
- Disappearing door	[lbs]	271	326	291	425
With ConvoClean / ConvoClean+, with ConvoSmoker					
- Right-hinged door	[lbs]	265	320	280	414
- Disappearing door	[lbs]	282	337	302	437
Packaging weight					
Packaging weight	[lbs]	55	77	62	84

C4 GB weights

		6.10	6.20	10.10	10.20
Weight without packaging					
Without ConvoClean / ConvoClean+, without ConvoSmoker					
- Right-hinged door	[lbs]	284	346	295	448
- Disappearing door	[lbs]	302	364	317	470
With ConvoClean / ConvoClean+, without ConvoSmoker					
- Right-hinged door	[lbs]	298	359	309	461
- Disappearing door	[lbs]	315	377	331	483
With ConvoClean / ConvoClean+, with ConvoSmoker					
- Right-hinged door	[lbs]	309	370	320	472
- Disappearing door	[lbs]	326	388	342	494
Packaging weight					
Packaging weight	[lbs]	55	77	62	84

C4 GS weights

		6.10	6.20	10.10	10.20
Weight without packaging					
Without ConvoClean / ConvoClean+, without ConvoSmoker					
- Right-hinged door	[lbs]	254	313	265	414
- Disappearing door	[lbs]	271	331	311	437
With ConvoClean / ConvoClean+, without ConvoSmoker					
- Right-hinged door	[lbs]	267	326	278	428
- Disappearing door	[lbs]	284	344	300	450
With ConvoClean / ConvoClean+, with ConvoSmoker					
- Right-hinged door	[lbs]	278	337	289	439
- Disappearing door	[lbs]	295	355	287	461
Packaging weight					
Packaging weight	[lbs]	55	77	62	84

9.2 Maximum permissible loading weight

C4 EB/ES/GB/GS

The total weight placed on the rack levels must not exceed the combi oven's maximum permissible loading weight:

		6.10	6.20	10.10	10.20
Maximum load weight					
Per combi oven	[lbs]	66	132	110	220
Per shelf	[lbs]	33	33	33	33

9.3 EB/ES Electrical Supply

C4 EB

		6.10	6.20	10.10	10.20
3~ 208/240V 60Hz (3/PE)					
Rated power consumption	[kW]	9.0 / 11.8	15.9 / 21.0	15.9 / 21.0	27.4 / 36.3
Hot air output	[kW]	8.6 / 11.4	15.5 / 20.6	15.5 / 20.6	27.0 / 35.9
Steam output	[kW]	7.4 / 9.8	14.7 / 19.6	14.7 / 19.6	22.1 / 29.4
Motor output	[kW]	0.35	0.35	0.35	0.35
Rated current	[A]	25.0 / 28.5	44.1 / 50.6	44.1 / 50.6	76.1 / 87.5
Residual current	[mA]	-	5.8	-	-
Protective conductor current	[mA]	-	3.4	-	-
Recommended supply connection					
Field wire gauge	AWG	8	6	6	3/2
Ground wire gauge	AWG	10	8	8	6
Conductor insulation rating		194 °F	194 °F	194 °F	194 °F

C4 ES

		6.10	6.20	10.10	10.20
3~ 208/240V 60Hz (3/PE)					
Rated power consumption	[kW]	9.0 / 11.8	15.9 / 21.0	15.9 / 21.0	27.4 / 36.3
Hot air output	[kW]	8.6 / 11.4	15.5 / 20.6	15.5 / 20.6	27.0 / 35.9
Motor output	[kW]	0.35	0.35	0.35	0.35
Rated current	[A]	25.0 / 28.5	44.1 / 50.6	44.1 / 50.6	76.1 / 87.5
Residual current	[mA]	5.2	-	-	-
Protective conductor current	[mA]	3.8	-	-	-
Recommended supply connection					
Field wire gauge	AWG	8	6	6	3/2
Ground wire gauge	AWG	10	8	8	6
Conductor insulation rating		194 °F	194 °F	194 °F	194 °F

C4 EB

		6.10	6.20	10.10	10.20
3~ 440/480V 60 Hz					
Rated power consumption	[kW]	9.2 / 10.9	16.3 / 19.3	16.3 / 19.3	28.2 / 33.4
Hot air output	[kW]	8.8 / 10.5	15.9 / 18.9	15.9 / 18.9	27.8 / 33.0
Steam output	[kW]	7.6 / 9.0	15.1 / 18.0	15.1 / 18.0	22.7 / 27.0
Motor output	[kW]	0.35	0.35	0.35	0.35
Rated current	[A]	12.1 / 13.1	21.4 / 23.3	21.4 / 23.3	37.0 / 40.3
Residual current	[mA]	5.9	-	6.7	-
Protective conductor current	[mA]	5.9	-	6.4	-
Recommended supply connection					
Field wire gauge	AWG	12	8	8	8/6
Ground wire gauge	AWG	12	10	10	10/8
Conductor insulation rating		194 °F	194 °F	194 °F	194 °F

C4 ES

		6.10	6.20	10.10	10.20
3~ 440/480V 60 Hz					
Rated power consumption	[kW]	9.2 / 10.9	16.3 / 19.3	16.3 / 19.3	28.2 / 33.4
Hot air output	[kW]	8.8 / 10.5	15.9 / 18.9	15.9 / 18.9	27.8 / 33.0
Motor output	[kW]	0.35	0.35	0.35	0.35
Rated current	[A]	12.1 / 13.1	21.4 / 23.3	21.4 / 23.3	37.0 / 40.3
Residual current	[mA]	-	-	-	6.3
Protective conductor current	[mA]	-	-	-	5.6
Recommended supply connection					
Field wire gauge	AWG	12	8	8	8/6
Ground wire gauge	AWG	12	10	10	10/8
Conductor insulation rating		194 °F	194 °F	194 °F	194 °F

C4 EB

		6.10	6.20	10.10	10.20
3~ 208V 60Hz (3/PE)					
Rated power consumption	[kW]	9.0	15.9	15.9	27.4
Hot air output	[kW]	8.6	15.5	15.5	27.0
Steam output	[kW]	7.4	14.7	14.7	22.1
Motor output	[kW]	0.35	0.35	0.35	0.35
Rated current	[A]	25.0	44.1	44.1	76.1
Residual current	[mA]	-	3.1	-	-
Protective conductor current	[mA]	-	3.0	-	-
Recommended supply connection					
Field wire gauge	AWG	8	6	6	3
Ground wire gauge	AWG	10	8	8	6
Conductor insulation rating		194 °F	194 °F	194 °F	194 °F

C4 ES

		6.10	6.20	10.10	10.20
3~ 208V 60Hz (3/PE)					
Rated power consumption	[kW]	9.0	15.9	15.9	27.4
Hot air output	[kW]	8.6	15.5	15.5	27.0
Motor output	[kW]	0.35	0.35	0.35	0.35
Rated current	[A]	25.0	44.1	44.1	76.1
Recommended supply connection					
Field wire gauge	AWG	8	6	6	3
Ground wire gauge	AWG	10	8	8	6
Conductor insulation rating		194 °F	194 °F	194 °F	194 °F

C4 EB

		6.10	6.20	10.10	10.20
3~ 240V 60Hz (3/PE)					
Rated power consumption	[kW]	11.8	21.0	21.0	36.3
Hot air output	[kW]	11.4	20.6	20.6	35.9
Steam output	[kW]	9.8	19.6	19.6	29.4
Motor output	[kW]	0.35	0.35	0.35	0.35
Rated current	[A]	28.5	50.6	50.6	87.5
Recommended supply connection					
Field wire gauge	AWG	8	6	6	2
Ground wire gauge	AWG	10	8	8	6
Conductor insulation rating		194 °F	194 °F	194 °F	194 °F

C4 ES

		6.10	6.20	10.10	10.20
3~ 240V 60Hz (3/PE)					
Rated power consumption	[kW]	11.8	21.0	21.0	36.3
Hot air output	[kW]	11.4	20.6	20.6	35.9
Motor output	[kW]	0.35	0.35	0.35	0.35
Rated current	[A]	28.5	50.6	50.6	87.5
Recommended supply connection					
Field wire gauge	AWG	8	6	6	2
Ground wire gauge	AWG	10	8	8	6
Conductor insulation rating		194 °F	194 °F	194 °F	194 °F

9.4 GB/GS Electrical Supply

C4 GB

		6.10	6.20	10.10	10.20
1N~ 120V 60 Hz					
Rated power consumption	[kW]	0.6	0.6	0.6	0.6
Hot air output	[kW]	0.1	0.1	0.1	0.1
Steam output	[kW]	0.1	0.1	0.1	0.1
Motor output	[kW]	0.35	0.35	0.35	0.35
Rated current	[A]	7.5	7.5	7.5	7.5
Residual current	[mA]	-	5.8	-	5.8
Protective conductor current	[mA]	-	-	-	-
Recommended supply connection					
Field wire gauge	AWG	14	14	14	14
Ground wire gauge	AWG	14	14	14	14
Conductor insulation rating		194 °F	194 °F	194 °F	194 °F

C4 GS

		6.10	6.20	10.10	10.20
1N~ 120V 60 Hz					
Rated power consumption	[kW]	0.6	0.6	0.6	0.6
Hot air output	[kW]	0.1	0.1	0.1	0.1
Motor output	[kW]	0.35	0.35	0.35	0.35
Rated current	[A]	7.5	7.5	7.5	7.5
Residual current	[mA]	-	6.6	6.1	1.0
Protective conductor current	[mA]	-	6.0	-	8.0
Recommended supply connection					
Field wire gauge	AWG	14	14	14	14
Ground wire gauge	AWG	14	14	14	14
Conductor insulation rating		194 °F	194 °F	194 °F	194 °F

9.5 Gas Characteristic Values for Natural Gas (USA), Propane (USA)

C4 GB/GS

Gas type		Natural Gas (USA)	Propane (USA)
Operating materials			
Natural gas, propane		x	x
Gas supply parameters			
Gas line connection for unit sizes 6.10, 6.20, and 10.10		1/2" NPT	1/2" NPT
Gas line connection for unit sizes 10.20		3/4" NPT	3/4" NPT
Supply flow pressure	[inch WC]	7	11
Exhaust extraction system			
Air ventilation system with safety shutdown function		Mandatory	Mandatory
Exhaust gas parameters			
Exhaust gas reading CO_2	[%]	9.4 - 11.1	10.5 - 12.5
Exhaust gas reading CO	[ppm]	< 500	< 500

9.6 Heat loss

C4 EB/ES

		6.10	6.20	10.10	10.20
When the unit door is closed					
Latent	[BTU/h]	2000	3100	2700	4400
Sensible	[BTU/h]	2800	4000	3400	4800

C4 GB/GS

		6.10	6.20	10.10	10.20
When the unit door is closed					
Latent	[BTU/h]	2000	3100	2700	4400
Sensible	[BTU/h]	3300	4800	4100	5800

9.7 Water connections

C4 EB/ES/GB/GS

Water supply (cold only)		
Shut-off device		Adequate backflow preventer
Water supply		Two 3/4" inner diameter GHT-M (garden hose adapter). The unit is designed for a permanent hookup to the water supply that uses a connecting hose with a minimum diameter of 1/2"
Flow pressure	[psi] / [bar]	22 - 87 psi / 1.5 - 6 bar
Pressure gauge in water supply	[psi] / [bar]	14.50 psi / 1 bar
Water drain		
Version		Naturally ventilated pipe to open pan or drain/channel
Type	DN	50（2" inside diameter）
Drain temperature	[°F] / [°C]	max. 140°F / 60°C
Slope for drain pipe		min. 3.5% (2°)
Safety overflow	[inch]	3.2" x 1"

9.8 Water quality

C4 EB/GB

Water connection (A) for boiler; water connection (B) for cleaning, recoil hand shower		
General water quality		Drinking water
Hardness	[ppm]	70 - 360 ppm (4 - 21 gpg)
TDS (total dissolved solids)	[ppm]	70 - 360
Total alkalinity	[ppm]	50 - 100
Water connections (A) and (B)		
Temperature	[°F]	max. 104
pH value		6.5 - 8.5
Cl^- (chloride)	[ppm]	max. 60
Cl_2 (free chlorine)	[ppm]	max. 0.2
SO_4^{2-} (sulfate)	[ppm]	max. 150
Fe (iron)	[ppm]	max. 0.1
SiO_2 (silicate)	[ppm]	max. 13
NH_2Cl (monochloramine)	[ppm]	max. 0.2

C4 ES/GS

Water connection (A) for water injection		
General water quality		Drinking water
Hardness	[ppm]	70 - 125 ppm (4 - 7 gpg)
TDS (total dissolved solids)	[ppm]	70 - 125
Total alkalinity	[ppm]	50 - 100
Water connection (B) for cleaning, recoil hand shower		
General water quality		Drinking water
Hardness	[ppm]	70 - 360 ppm (4 - 21 gpg)
TDS (total dissolved solids)	[ppm]	70 - 360
Total alkalinity	[ppm]	50 - 100
Water connections (A) and (B)		
Temperature	[°F]	max. 104
pH value		6.5 - 8.5
Cl^- (chloride)	[ppm]	max. 60
Cl_2 (free chlorine)	[ppm]	max. 0.2
SO_4^{2-} (sulfate)	[ppm]	max. 150
Fe (iron)	[ppm]	max. 0.1
SiO_2 (silicate)	[ppm]	max. 13
NH_2Cl (monochloramine)	[ppm]	max. 0.2

9.10 Water consumption during cooking

C4 EB/GB

		6.10	6.20	10.10	10.20
Hard and soft water					
Average consumption without cleaning	[gph]	0.8	1.9	1.6	2.3
Maximum possible water flow rate	[gpm]	4.0	4.0	4.0	4.0

C4 ES/GS

		6.10	6.20	10.10	10.20
Hard and soft water					
Average consumption without cleaning	[gph]	0.9	2.0	1.7	2.9
Maximum possible water flow rate	[gpm]	4.0	4.0	4.0	4.0
Soft water (water treatment system sizing)					
Average consumption without cleaning	[gph]	0.6	1.4	1.1	2.0
Maximum possible water flow rate	[gpm]	0.2	0.2	0.2	0.2

9.11 Water consumption during cooking and cleaning

C4 EB/GB

		6.10	6.20	10.10	10.20
Hard and soft water					
Average water consumption with cleaning	[gph]	1.8	2.9	2.6	3.3

C4 ES/GS

		6.10	6.20	10.10	10.20
Hard and soft water					
Average water consumption with cleaning	[gph]	1.9	3.0	2.7	3.9

ALTO-SHAAM CT PROformance™

ITEM NO. _____ R0008

COMBITHERM®

CTP10-20E

ELECTRIC BOILER-FREE

CAPACITY

- Ten (10) full-size sheet pans; ten (10) GN 2/1 pans; twenty (20) full-size hotel or GN 1/1 pans; two rows deep
- Two (2) side racks with ten (10) non-tilt support rails; 13" (330mm) horizontal width between rails, 2-3/4" (70mm) vertical spacing between rails

CONSTRUCTION

- Stainless steel exterior, bright annealed interior
- Seamless welded interior stainless steel cavity
- CoolTouch3™ triple pane window door with hinged inner glass prevents additional heat loss and increases cooking efficiency
- Door is hinged right with a 130° swing
- High efficiency LED lighting integrated in the door
- Door mounted self-draining drip tray
- Hands free positive catch door handle with lighted visual alerts [PATENT PENDING]
- PROrinse™ ergonomic retractable hand shower includes a safety shutoff interlock that shuts off water to the hose [PATENT PENDING] and a built-in backflow preventer in the hand shower handle
- SafeVent™ provides automatic steam venting at the end of the cooking cycle [PATENT #7,282,674]
- Zero Clearance design maximizes floor space utilization with features that carefully protect temperature sensitive components and controls [PATENT PENDING]
- Adjustable stainless steel legs provide stability

CT PROFORMANCE™ STANDARD FEATURES

- Oven with state-of-the-art innovative solutions that meld together perfectly to deliver the highest performance standards, consistent food quality, and production efficiency.
- PROtouch™ control provides a simple and intuitive touch screen interface, large screen display and icons that are easy to use and identify.
- Software operation in English, French, German, Korean, Mandarin, Russian, or Spanish.
- Four cooking modes:
  Steam - 85°F to 250°F (30°C to 120°C)
  Convection - 85°F to 575°F (30°C to 300°C)
  Combination - 85°F to 575°F (30°C to 301°C)
  Retherm - 245°F to 320°F (120°C to 160°C)
- Cook time is displayed in hours : minutes : seconds for greater precision.
- Access an unlimited number of programmed titled recipes that you've customized, marked as favorites, or placed into category folders.
- Removable, single-point, quick-connect, core temperature product probe.
- Two power levels: reduced power to manage kitchen power peaks, and eco power for optimal oven efficiency.
- Absolute Humidity Control™ (AHC) provides 0 - 100% humidity levels allowing more control over the ideal cooking environment and product finish [PATENT PENDING].
- Auto-reversing fan with five different fan speeds expands cooking capabilities - from braising, roasting, to flow sensitive products such as soufflés and meringues, or any product affected by a high velocity of air movement.
- Moisture injection feature provides perfect sheen and crust on breads and pastry items.
- Auto-detect USB for HACCP data access, Recipe Management, and software updates.
- Multi-shelf timers can be labeled by product name and programmed in hours, minutes and seconds giving greater control for delicate items.
- Sleep mode can be used to save valuable time by eliminating the need to power down and restart.
- Low temperature Delta-T feature for lower temperature cooking or longer term roasting.
- Programmable cool down feature provides the operator with the ability to lower the temperature of the oven compartment at an accelerated pace.
- Dehydration auxiliary function.
- CombiClean PLUS™ fully automated cleaning with 5 cleaning levels.
- Odometer tracking and audit trail provides extensive diagnostic and troubleshooting features.

SHORT FORM SPEC

Provide Alto-Shaam Combitherm® CT PROformance™ counter-top model CTP10-20E boiler-free electric CombiOven designed with EcoSmart® technology for reduced energy and water consumption. Includes operational modes for steam, convection, a combination of steam and convection heat, and retherm. Oven is to be constructed of 18 gauge stainless steel interior cavity. Oven includes an attached retractable hand shower spray hose with safety shutoff interlock system and a backflow preventer. PROtouch™ control features includes a cool-down function, automatic cleaning function, recipe programming, two power levels, 0 - 100% humidity levels, auto-reversing fan with five (5) fan speeds, multi-shelf timers, and sleep mode. Oven includes USB port, HACCP data access, and four (4) adjustable stainless steel legs. Each oven is to accommodate up to ten (10) full-size sheet pans or twenty (20) full-size hotel pans (GN 1/1), include standard right-hand door hinging, ten (10) non-tilt support rails, and five (5) stainless steel shelves.

FACTORY INSTALLED OPTIONS

☐ Boiler Version

☐ PROpower™ - An accelerated turbo power for an instant boost of heat or quick heat recovery [PATENT PENDING]

Electrical Choices
- ☐ 208-240V 3ph ☐ 380-415V 3ph
- ☐ 440-480V 3ph

Door Swing
- ☐ Right-hand Door Hinging, standard
- ☐ Recessed Door, optional: increases oven width by 4" (102mm)

☐ Automatic Grease Collection System [PATENT PENDING], includes four (4) 6-piece, self-trussing poultry racks #5014438, interior drip collection pan, and grease collection container with shut off valve (not available on units with smoking feature)

☐ Extended One-year Warranty

Cleaning system choices
- ☐ Automatic tablet-based cleaning system, standard
- ☐ Automatic liquid cleaning system, optional
  Pumps through the system for a deep cleaning, hands free process, includes one (1) removable support tray for liquid cleaner container

☐ CombiHood PLUS™ ventless hood (not available on stacked combinations or units with smoking feature)

☐ CombiLatch™ door interlock with adjustable timer safeguards operators from heat and steam in the oven cavity when opening the door during a cooking cycle

☐ Installation Start-Up Check - AVAILABLE THROUGH AN ALTO-SHAAM AUTHORIZED SERVICE AGENCY

☐ Smoking Feature - including one-step cold smoking (NOT AVAILABLE ON UNITS WITH SECURITY DEVICES)

Probe Choices
- ☐ Removable, single-point, quick-connect core temperature probe, standard
- ☐ Removable, single-point, quick-connect sous vide temperature probe, optional
- ☐ Hard-wired, multi-point core temperature probe, optional

Security Devices for correctional facility use
- ☐ Optional base package: includes tamper-proof screw package, excludes temperature probe
- ☐ Anti entrapment device, optional
- ☐ Control panel security cover, optional
- ☐ Hasp door lock (padlock not included), optional
- ☐ Removable, single-point, quick-connect core temperature probe, optional
- ☐ Seismic feet package, optional

ALTO-SHAAM®

W164 N9221 Water Street • P.O. Box 450 • Menomonee Falls, Wisconsin 53052-0450 • U.S.A.

PHONE: 262.251.3800 800.558.8744 U.S.A./CANADA FAX: 262.251.7067 800.329.8744 U.S.A. ONLY

www.alto-shaam.com

ALTO-SHAAM® CT PROformance™

COMBITHERM®

CTP10-20E

ELECTRIC BOILER-FREE

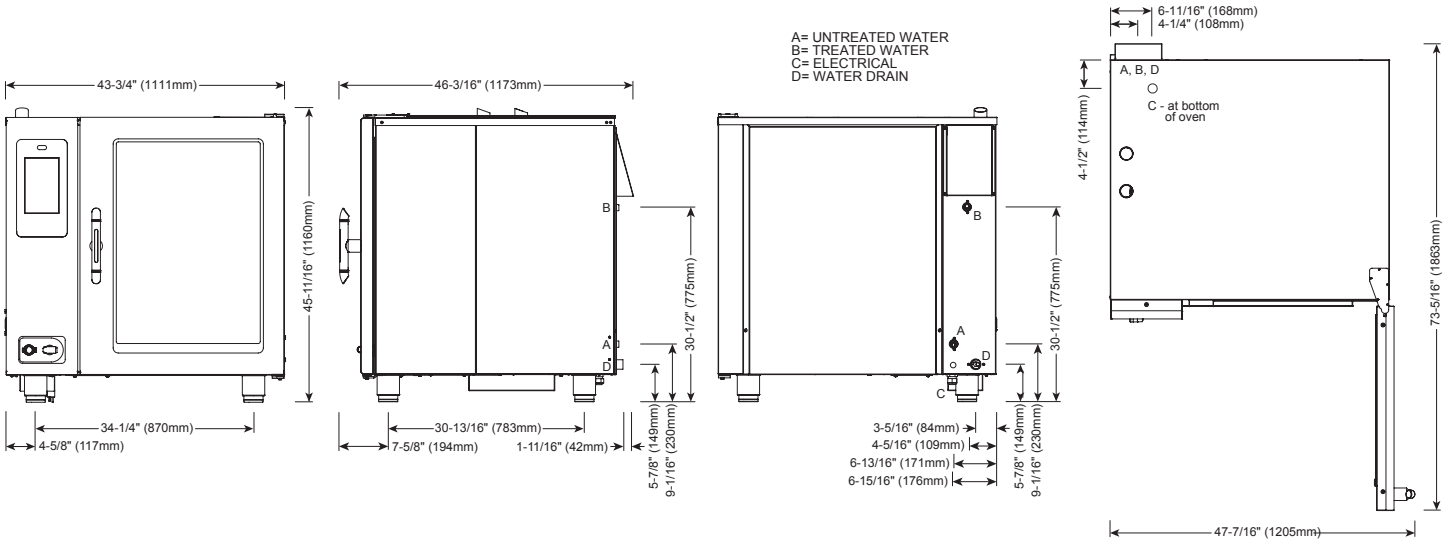

IP X5

DIMENSIONS: H x W x D
EXTERIOR: 45-11/16" x 43-3/4" x 46-3/16" (1160mm x 1111mm x 1173mm)
EXTERIOR WITH RECESSED DOOR: 45-11/16" x 47-3/4" x 46-3/16" (1160mm x 1213mm x 1173mm)
INTERIOR: 31-1/2" x 24-1/4" x 32-3/4" (800mm x 616mm x 832mm)

WATER REQUIREMENTS

TWO (2) COLD WATER INLETS - DRINKING QUALITY

ONE (1) TREATED WATER INLET: 3/4" NPT*
ONE (1) UNTREATED WATER INLET: 3/4" NPT*
* Can manifold off of one 3/4" line.
LINE PRESSURE: 30 to 90 psi 2.1 to 6.3 bar
WATER DRAIN: 1-1/2" (40mm) CONNECTION WITH A 2" (51mm) MINIMUM AIR GAP INSTALLED AS CLOSE TO THE OVEN AS POSSIBLE. MATERIALS MUST WITHSTAND TEMPERATURES UP TO 200°F (93°C).

CLEARANCE REQUIREMENTS

LEFT:	0" (0mm)	18" (457mm) FOR SERVICE ACCESS
RIGHT:	0" (0mm) NON-COMBUSTIBLE SURFACES	2" (51mm) DOOR SWING OR COMBUSTIBLE SURFACES
TOP:	20" (508mm) FOR AIR MOVEMENT	
BACK:	4" (102mm)	**BOTTOM:** 5-1/8" (130mm) FOR LEGS, AIR INTAKE

INSTALLATION REQUIREMENTS

- Oven must be installed level.
- Hood installation is required.
- Water supply shut-off valve and back-flow preventer when required by local code.

WATER QUALITY STANDARDS

It is the sole responsibility of the owner/operator/purchaser of this equipment to verify that the incoming water supply is comprehensively tested and if required, a means of "water treatment" provided that would meet compliance requirements with the published water quality standards published below. Non-compliance with these minimum standards will potentially damage this equipment and/or components and void the original equipment manufacturer's warranty. Alto-Shaam recommends using OptiPure® [www.optipurewater.com] products to properly treat your water.

Contaminant	Inlet Water Requirements
Free Chlorine	Less than 0.1 ppm (mg/L)
Hardness	30-70 ppm
Chloride	Less than 30 ppm (mg/L)
pH	7.0 to 8.5
Silica	Less than 12 ppm (mg/L)
Total Dissolved Solids (tds)	50-125 ppm

ELECTRICAL - CTP10-20E (NO CORD, NO PLUG, DEDICATED CIRCUIT REQUIRED) DO NOT CONNECT TO A G.F.I. OUTLET

					ECO STANDARD			**PROpower™ OPTION			WITH COMBISMOKER® OPTION: ECO STANDARD			**PROpower™ OPTION		
VOLTAGE	PH	HZ	AWG	CONNECTION	AMPS	kW	BREAKER	AMPS	kW	BREAKER	AMPS	kW	BREAKER	AMPS	kW	BREAKER
208 – 240	3	50/60	2 – 1	L1, L2, L3, G	68.8 – 79.4	24.8 – 33	70 – 80	88.7 – 102.3	28.9 – 38.5	90 – 110	71.3 – 82.3	25.3 – 33.7	80 – 90	91.2 – 105.2	29.4 – 39.2	100 – 110
380 – 415	3	50	4 – 3	L1, L2, L3, N, G	42.1 – 45.8	28.2 – 33	63	63.2 – 68.8	32.3 – 38.5	63 – 80	44.8 – 48.7	28.8 – 33.7	63	65.8 – 71.6	32.9 – 39.2	100
440 – 480	3*	60	6 – 4	L1, L2, L3, G	36.4 – 39.7	28.3 – 33	40	46.9 – 51.2	32.4 – 38.5	50 – 60	37.7 – 41.1	28.8 – 33.7	40 – 50	48.2 – 52.6	33 – 39.2	50 – 60

*ELECTRICAL SERVICE CHARGE APPLIES **NO-COST OPTION ON ELECTRIC MODELS

WEIGHT

NET	760 lbs est	345 kg
SHIP	800 lbs*	363 kg*

*DOMESTIC GROUND SHIPPING INFORMATION. CONTACT FACTORY FOR EXPORT WEIGHT AND DIMENSIONS.

SHIP DIMENSIONS

(L x W x H) 56" x 48" x 65"*
(1422 x 1219 x 1651mm)*

PAN CAPACITY

	FULL–SIZE:	20" x 12" x 2-1/2"	Twenty (20)
*ON WIRE SHELVES ONLY	GN 1/1:	530 x 325 x 65mm	Twenty (20)
	GN 2/1:	650 x 530 x 65mm	Ten (10)
	*FULL-SIZE SHEET:	18" x 26" x 1"	Ten (10)

PRODUCT MAXIMUM: 240 lb (109 kg)
VOLUME MAXIMUM: 150 quarts (190 liters)
*ADDITIONAL WIRE SHELVES REQUIRED FOR MAXIMUM CAPACITY

DUE TO ONGOING PRODUCT IMPROVEMENT, SPECIFICATIONS ARE SUBJECT TO CHANGE WITHOUT NOTICE.

R0009

Project _____

AIA # _____ SIS # _____

Item # _____ Quantity _____ C.S.I. Section 114000

G-SERIES

3-Section Refrigerator Reach-In Self-Contained Solid Door(s)

Many models are ENERGY STAR® listed. Please refer to www.energystar.gov to view the most up-to-date product listing and performance data.

Intertek 4004142 Conforms to UL STD. 471 Cert. to CAN/CSA STD. C22.2 NO.120

CERTIFIED TO ANSI/NSF 7

3-YEAR PARTS & LABOR WARRANTY

This unit is listed to the applicable UL, CSA and NSF Standards by an approved NRTL. Consult the factory or unit's data plate for approval information.

AVAILABLE CONFIGURATIONS

Half-Height Door Models	Hinging
G30000	Left/Right/Right
G30001	Left/Left/Right
G30002	Right/Right/Right
G30003	Left/Left/Left

Full-Height Door Models	Hinging
G30010	Left/Right/Right
G30011	Left/Left/Right
G30012	Right/Right/Right
G30013	Left/Left/Left

STANDARD PRODUCT FEATURES

- High Performance, Energy Efficient Refrigeration System
- Reliable Microprocessor Control With LED Temperature Display
- Evaporator Coil Outside Food Zone Provides More Usable Space
- Load-Sure Guard Prevents Problems From Improper Loading
- Durable All Metal Construction
- Stainless Steel Front & Doors, Anodized Aluminum Sides & Interior
- Full or Half Height Door Models with a Variety of Hinging Configurations
- Long Life EZ Clean Door Gaskets
- Three (3) Epoxy Coated Shelves Per Section (factory installed)
- Easy to Maintain Front Facing Condenser Coil
- 6" High Locking Casters
- Guaranteed for Life Door Handles & Hinges
- 3-Year Parts & Labor Warranty
- 2-Years Additional Compressor Parts Warranty

ACCESSORIES & OPTIONS (*field installed)

- Tray Slides for 18" x 26" Sheet Pans*
- Tray Slides for 12" x 20" Food Pans*
- Tray Slides for 14" x 18" Sheet Pans*
- Tray Slides for 18" x 26, 12" x 20" & 14" x 18" Pans*
- Additional Shelves*
- 6" High Legs*
- Lower Height Casters*
- Optional Remote Applications

*Please refer to form number TR35872 for precise kit details. See back page for tray slide versatility chart.

Approved by_____ Date_____ Approved by_____ Date_____

MODELS

Half Height Door Models: G30000, G30001, G30002, G30003

CLICK
TRANSFER
For KCL CADalog Website

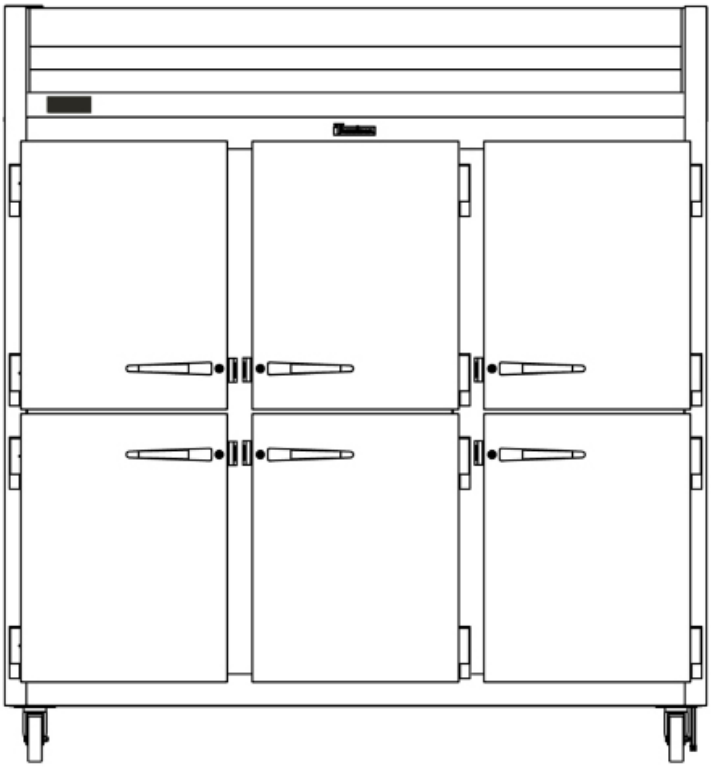

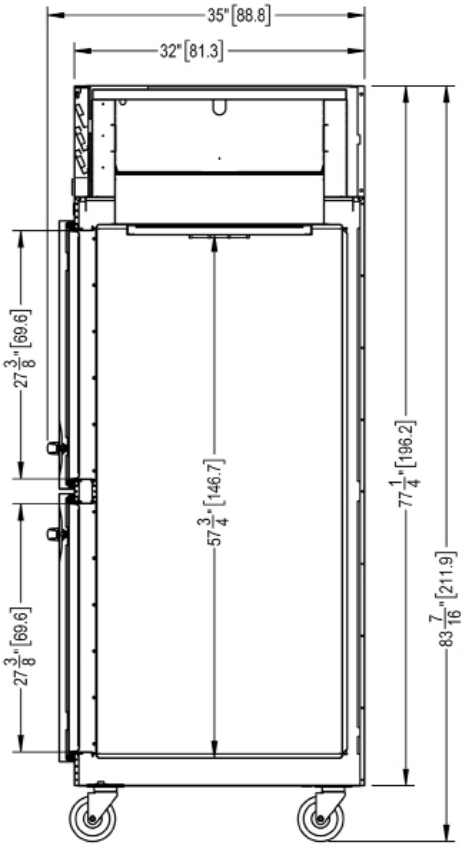

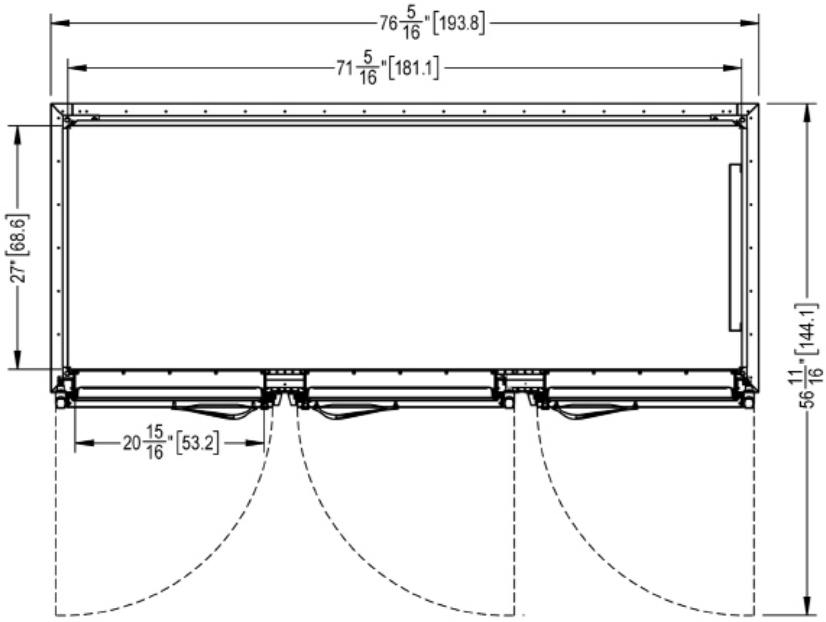

MODELS

Full Height Door Models: G30010, G30011, G30012, G30013

CLICK
TRANSFER
For KCL CADalog Website

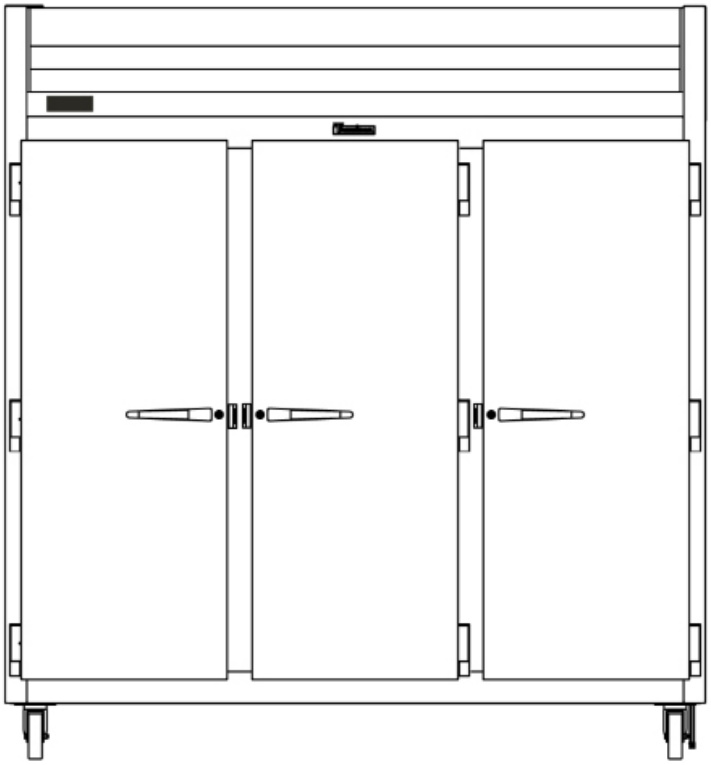

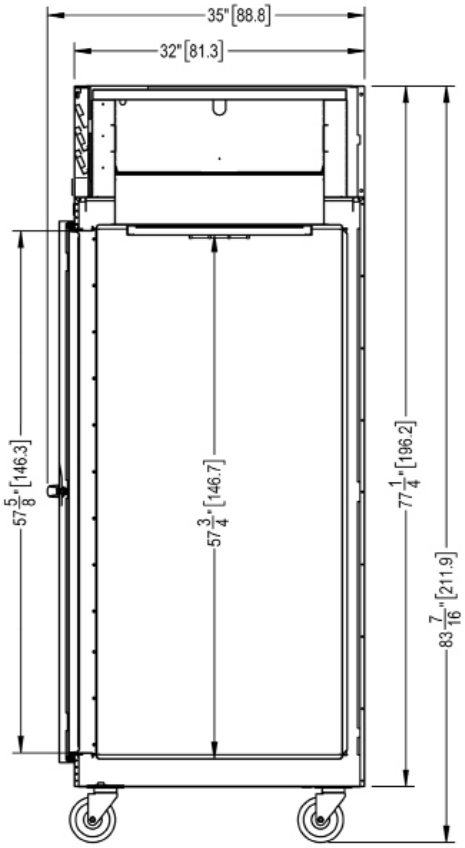

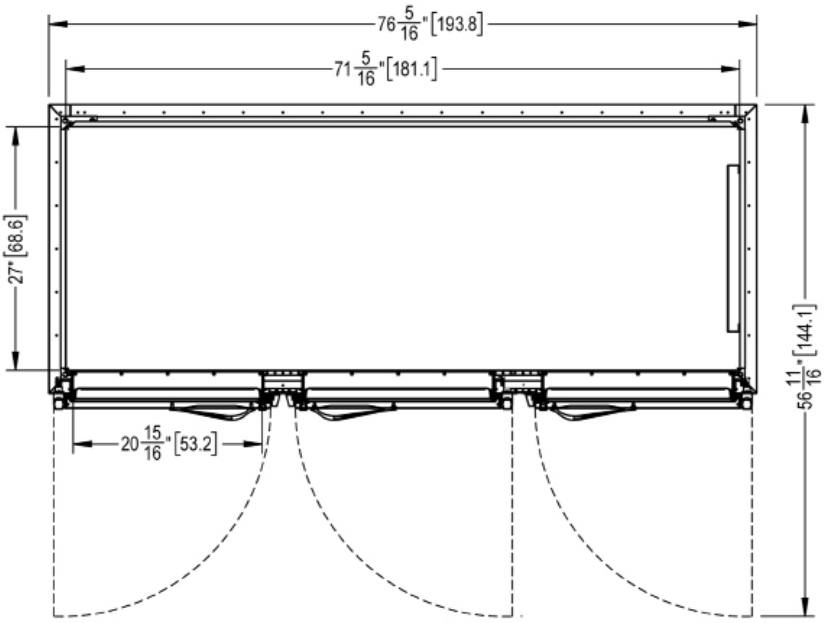

G-SERIES

3-Section Refrigerator Reach-In
Self-Contained Solid Door(s)

MODELS

Half Height Door Models: G30000, G30001, G30002, G30003
Full Height Door Models: G30010, G30011, G30012, G30013

MODELS	G300_ _
DIMENSIONAL DATA	
Net Capacity cu. ft.[1]	69.15 (1958 l) | 69.35 (1964 l)
L x D x H - Overall in.[2]	76 5/16 (193.8 cm) x 35 (88.8 cm) x 83 7/16 (211.9 cm)
Depth - over body in.	32 (81.3 cm)
Depth - door open 90° in.	57 5/8 (146.3 cm)
Clear half-door W x H in.	21 1/8 (53.6 cm) x 27 1/2 (69.9 cm)
Clear full-door W X H in.	21 1/8 (53.6 cm) x 57 5/8 (146.3 cm)
No. Standard Shelves	9
Shelf Area sq. ft.[3]	51.9 (4.82 sq m)
ELECTRICAL DATA	
Voltage | Plug	115/60/1 | NEMA 5-15P (attached)
Feed wires with ground	3
Full Load Amperes | MDEC[4]	8.4 | 3.38 KWH/Day
REFRIGERATION DATA	
Refrigerant	R-450A
Refrigerant Charge Amount	24 oz
BTU/HR | H.P.[5]	4610 | 1/2 HP
Required Clearance	12" Above
SHIPPING DATA	
L x D x H Crated in.	91(231 cm) x 42 (107 cm) x 85 (216 cm)
Volume Crated cu. ft.	188 (5324 l)
Uncrated | Crated Weight lbs.	610 (277 kg) | 630 (286 kg)

NOTES:
1. Net Capacity cu. ft. = Half Height Door | Full Height Door models.
2. Height shown when mounted on standard 6" high casters.
3. Figure shown reflects the area of standard shelf compliment.
4. MDEC = Maximum Daily Energy Consumption
5. Based on a 90°F ambient and 20°F evaporator. For remote data please refer to spec sheet TR35837.

EQUIPMENT SPECIFICATIONS

CONSTRUCTION, HARDWARE, INSULATION
Cabinet exterior front, louver assembly and door(s) are constructed of 20 gauge stainless steel. Cabinet sides (including returns), interior and door liners are constructed of anodized aluminum. The exterior cabinet top, back and bottom are constructed of heavy gauge galvanized steel. A set of four (4) 6" high locking casters are included. Doors are equipped with a gasket protecting, raised metal door pan, cylinder locks, and guaranteed for life self-closing cam-lift hinges with a stay open feature at 120°F. Hinges include a concealed switch to automatically activate the interior LED lighting. Guaranteed for life, metal work flow door handles are mounted horizontally over recess in door which limits protrusion into aisle ways. Gasket profile and durable long life material simplify cleaning and increase overall gasket life. Anti-condensate heaters are located behind each door opening. Both the cabinet and door(s) are insulated with an average of 2" thick high density, non-CFC, 100% foamed in place polyurethane.

SELF-CONTAINED REFRIGERATION SYSTEM
A top mounted, self-contained, balanced refrigeration system using environmentally friendly, non-flammable R-450A refrigerant is conveniently located behind the one piece louver assembly. It features an easy to clean front facing condenser, thermostatic expansion valve metering device, air-cooled hermetic compressor, large, high humidity evaporator coil located outside the food zone and a top mounted non-electric condensate evaporator. A 9' cord and plug is provided. Standard operating temperature is 34 to 38°F.

CONTROL
The easy to use water resistant microprocessor control is supplied standard. It includes a 3-Digit LED Display, and a Fahrenheit or Celsius Temperature Scale Display Capability.

INTERIOR ARRANGEMENTS
Standard interior arrangements include three (3) epoxy coated steel wire shelves per section, mounted on shelf pins, installed at the factory. Shelves are full-width, and do not have any large gaps between them requiring the use of "bridge" or "junior shelves." Recommended load limit per shelf should not exceed 225 lbs.

DOMESTIC WARRANTY
Both a three year parts and labor warranty and an additional two year compressor parts warranty (for a total of five on self-contained models) are provided standard.

OPTIONAL ACCESSORY TRAY SLIDE VERSATILITY CHART

TRAY SLIDE DRAWINGS	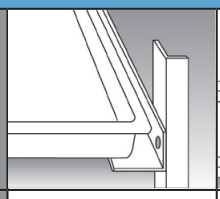	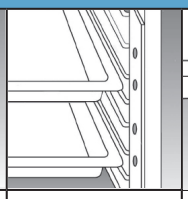	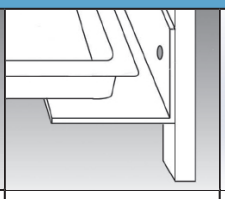	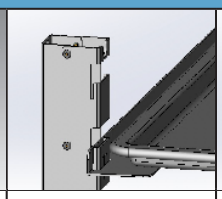	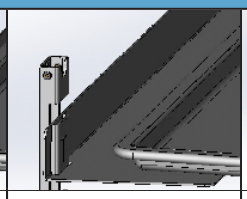	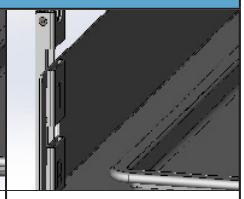
TRAY SLIDE OFFERING	#1 (1) 18"x26" or (2) 14"x18"	#4 (Rod Type) (1) 18"x26"	Universal (1) 18"x26" or (2) 14"x18" or (2) 12"x20"	#1 EZ-Change (1) 18"x26" or (2) 14"x18"	Universal EZ-Change (1) 18"x26" or (2) 14"x18" or (2) 12"x20"	HD Universal EZ-Change (1) 18"x26" or (2) 14"x18" or (2) 12"x20"
SPACING CAPACITY DOOR SIZE	2" 28 Pairs Full Door & 13 Half 3" 19 Pairs Full Door & 09 Half 4" 14 Pairs Full Door & 07 Half 5" 11 Pairs Full Door & 05 Half	1 1/2" 38 Pairs Full Door (2 Pair) 1 1/2" 18 Pairs Half Door (1 Pair)	4" 14 Pairs Full Door & 06 Half[1] 4" 14 Pairs Full Door & 07 Half[2] 5" 11 Pairs Full Door & 05 Half 6" 09 Pairs Full Door & 04 Half	2" 26 Pairs Full Door & 12 Half 4" 13 Pairs Full Door & 06 Half	2 1/4" 22 Pairs Full Door & 11 Half 4 1/2" 11 Pairs Full Door & 05 Half	4 1/2" 11 Pairs Full Door & 05 Half 9" 05 Pairs Full Door & 02 Half

- Upper Half Height Door[1]
- Lower Half Height Door[2]

CONTINUED PRODUCT DEVELOPMENT MAY NECESSITATE SPECIFICATION CHANGES WITHOUT NOTICE.

R0010

PROJECT: _____

ITEM # _____ QTY: _____

MODEL # _____

AIA # _____ SIS # _____

EXTRA WIDE DUAL TEMP SOLID DOOR REACH-IN PASS-THRU REFRIGERATOR/FREEZER

RFSA-2D-S1-EW-PT-HC

POWERED BY V-CORE

EXCLUSIVE WARRANTY

- 6 Year Parts & Labor Warranty
- 7 Year Compressor Warranty
- Exclusive 2 Year Warranty On Magnetic Door Gaskets
- Lifetime Warranty On Handles & Hinges (parts only)

CABINET CONSTRUCTION

- Stainless Steel Exterior
- Aluminum Interior
- Refrigerator Is On The Left And Freezer Is On The Right
- Stay-Open Door Feature For Easy Product Loading
- 20 Gauge Stainless Steel Door
- Magnetic Door Switch Automatically Activates Interior LED Light
- Heavy-Duty Cylinder Locks
- Stainless Steel Interior Door Liner
- Insulated Partition Wall Separates Compartments
- One Piece, Snap-In Magnetic Door Gaskets
- Low Profile Vertical Door Handles
- Hinged Front Shroud
- Energy Saving Thermal Breaker
- Stainless Steel Breaker Caps
- 6 Silver Freeze Wire Shelves
- 6" High Adjustable Stainless Steel Legs
- 8' Cord And Plug (see electrical data for details)

FEATURES

- Full Electronic Control With Touchpoint Interface
- Expansion Valve Technology
- Manager's Lockout Feature
- Anti-Condensate Perimeter Heater
- Variable Speed Compressor Technology

REFRIGERATION

- Refrigeration System Uses R-290 Refrigerant To Comply With All Environmental Concerns
- Hot Gas Condensate Evaporator
- Adaptive Defrost For Reduced Energy Consumption And More Consistent Product Temperatures
- Epoxy Coated Evaporator Coil, Located Out Of The Food Zone
- Refrigerator Capable Of Maintaining Product Temperature 36°F To 38°F
- Freezer Capable Of Maintaining Product Temperature -10°F

ENERGY STAR

Please Verify Qualifying Units By Visiting:
www.energystar.gov/cfs

PROUDLY MADE IN THE USA

OPTIONS & ACCESSORIES

- Secure-Temp™ Technology
- Stainless Steel Case Back
- Exterior Door Laminate
- Glass Door Models
- Stainless Steel Kick Plate
- Additional Shelves
- Heat Shield (left, right)
- 6" Casters Or 6" Seismic Legs
- Tray Slides
- Freezer FlexTemp Models Maintain Between 0°F And 20°F
- Refrigerator FlexTemp Models Maintain Between 28°F And 38°F
- Door Swing Orientation (at time of order)
- Correctional Package
- Remote Model* (6" legs only) (refrigerant must be specified at time of order, see note)

3779 Champion Blvd, Winston-Salem, NC 27105

ph: (888) 845-9800 | fax: (800) 253-5168

Sales@VictoryRefrigeration.com | VictoryRefrigeration.com

Rev. 9/1/23 Printed in U.S.A.

APPROVAL: _____ DATE: _____

EXTRA WIDE DUAL TEMP SOLID DOOR REACH-IN PASS-THRU REFRIGERATOR/FREEZER

VICTORY ULTRASPEC

EXTRA WIDE DUAL TEMP SOLID DOOR REACH-IN PASS-THRU REFIGERATOR/FREEZER

RFSA-2D-S1-EW-PT-HC

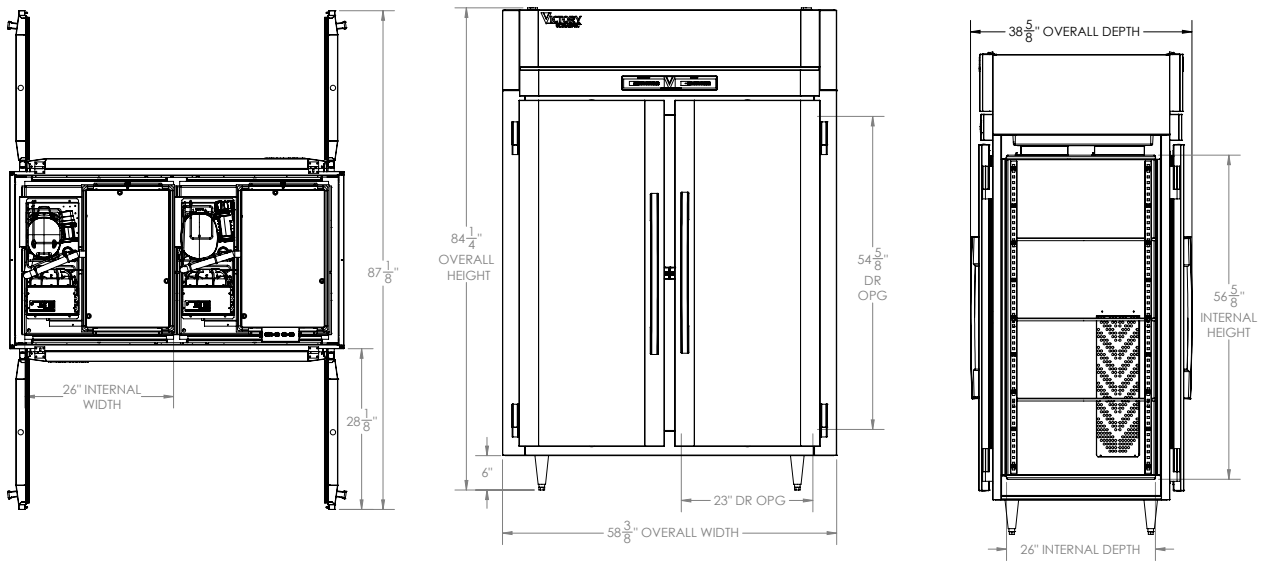

We reserve the right to change specifications and product design without notice. Such revisions do not entitle the buyer to corresponding changes, improvements, additions or replacements for previously purchased equipment. Dimensional tolerances +/- 1⁄4". Metric dimensions (MM)

12" Top and 3" rear clearance is required

CHARACTERISTICS		ELECTRICAL DATA		SHIPPING DETAILS	
Net Capacity (cubic ft.)	R 26.06 - F 26.06	Cabinet Voltage**	115/60/1	Height	88"
Width, Overall (in.)	58 3/8"	Total Amperes	R 6.5 - F 9.1	Width	66"
Depth, Overall (with handle)	38 5/8"	NEMA Plug (8' cord)	(2) 5-15P	Depth	41"
Height Overall (6" legs)	84 1/4"	**REFRIGERATION DATA**		Crated Weight	720 lbs
Depth, Door Open 90°	87 1/8"	Condensing Unit Size, HP	R 1/3 - F 3/4	*NOTE: Remote units are field wired and come with 6" legs. Refrigerant must be specified at time of order.	
Door Opening (in.)	23" x 54 5/8"	Refrigerant	R-290		
No. Of Doors/Shelves	4/6	Capacity (BTU/HR) (100°F/-20°F)	R 2800 - F 2450		
		Heat Rejection (BTU/HR)	7875		
		Charge (lbs/grams)	R .3307/150 F 0.2866/130		

** NOTE: This unit utilizes variable speed compressor technology. The compressor can experience nuisance tripping on Class A GFCI outlets which have a trip limit of 4 mA to 6 mA. To avoid this issue in a location that requires GFCI circuit protection, Victory recommends using a HUBBELL Model Number GFRST83W 20A Heavy Duty Hospital Grade Self-Test GFCI Receptacle.

3779 Champion Blvd, Winston-Salem, NC 27105 | ph: (888) 845-9800 | fax: (800) 253-5168

Sales@VictoryRefrigeration.com | VictoryRefrigeration.com

Rev. 9/1/23 Printed in U.S.A.

an Ali Group Company

GROUP

The Spirit of Excellence

R0014

CB15

Heavy-Duty, One Gallon Food Blender

BLEND

*Made in USA with US and foreign parts.

MAIN FEATURES

- Ultra-heavy-duty, 3.75 HP commercial motor — perfect for large loads and long blending times
- 3-speed selection and MAX PULSE to chop and mix
- Easy-to-clean and easy-to-use electronic membrane keypad
- 1 gallon stainless steel container with two handles for carrying and pouring, and lid clamps for security
- Easy-off, rubberized lid with removable clear cap for adding ingredients and for pressure reduction during hot food blending
- Durable, high-performance stainless steel blade
- Metal-on-metal, stainless steel coupling system for durability and reliability
- Durable, full die-cast motor housing with rugged rubber feet to reduce vibration
- Dishwasher-safe, one-piece jar pad for easy cleaning
- Recommended for 100+ drinks or servings per day
- Limited Three-Year Motor Warranty

ELECTRICAL

Voltage: 120
Frequency: 50/60Hz
Watts: 1800
Amps: 15
Plug Type: A
Cord Length: 6.6 feet

SALES FEATURES

The Waring® CB15 has your back when it comes to ultra-heavy-duty blenders, making 100+ drinks per day. Chop, mix and shred large loads that need long blending times with a powerful 3.75 HP motor and electronic keypad controls. The durable, 1 gallon stainless steel container means business with two handles for carrying and pouring, and lid clamps for security.

©2018 Waring Commercial
314 Ella T. Grasso Avenue, Torrington, CT 06790
Tel. 800-492-7464 • Fax 860-496-9008

@waringcommercial

waringcommercialproducts.com

Heavy-Duty, One Gallon Food Blender
CB15

Heavy-Duty, One Gallon Food Blender
CB15

INCLUDED ACCESSORIES

CB15BU Base Unit

CAC77 Vinyl Lid for 1 Gallon Blender Jar

CBL10 Hot Blending Lid for 1 Gallon Blenders

CAC72 Two-Handle, 1 Gallon Stainless Steel Container with Blade Assembly and Lid

OPTIONAL ACCESSORIES

CAC125 Two-Handle, 1 Gallon Stainless Steel Container with Spigot, Blade Assembly and Lid

CAC170 1 Gallon, Stackable, 128 oz., BPA-Free Copolyester Container with Blade Assembly and Lid

CAC32 40 oz. Glass Container Complete with Blade Assembly and Lid (requires AD1)

AD1 1 Quart Adapter for 1 Gallon Blenders

CAC19 48 oz., BPA-Free Copolyester Container Complete with Blade Assembly and Lid (requires AD1)

CAC33 32 oz. Stainless Steel Container Complete with Blade Assembly and Lid (requires AD1)

CAC02 Outer Lid ONLY for 48 oz., BPA-Free Copolyester or 64 oz. Stainless Steel Container

CAC04 Outer Lid ONLY for 32 oz. Stainless Steel Container

CAC05 Center Lid ONLY for CAC01, CAC02, and CAC04

DIMENSIONS

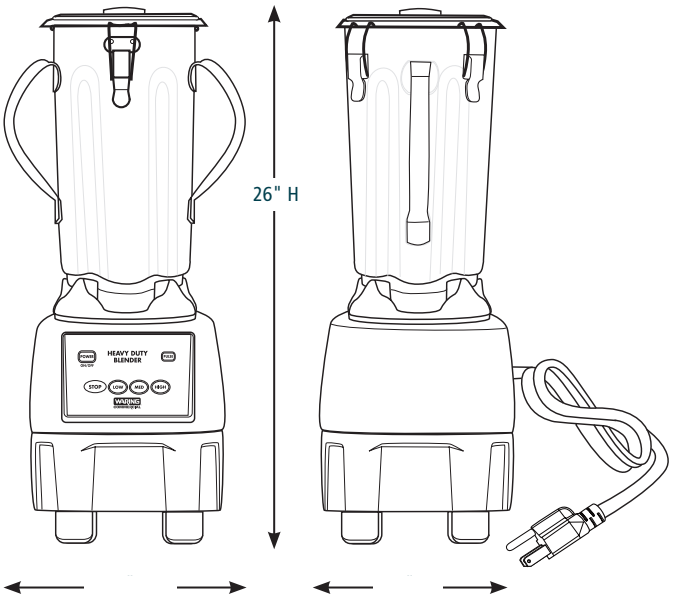

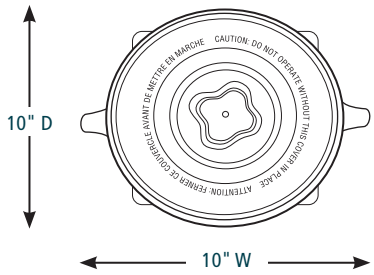

Out of Box Weight: 32.4 lb.

ORDERING INFORMATION	#STD. PKG.	GIFTBOX WEIGHT	CUBIC FEET	BOX DIMENSIONS L x W x H	UPC	CASE PKG.	MC WEIGHT	MC DIMENSIONS L x W x H	MBC
CB15 – One Gallon, 3-Speed Food Blender	1	38	2.1	22.0" x 14.3" x 14.8"	040072000836	1	40	22.5" x 15.3" x 16"	10040072000833

@waringcommercial

©2019 Waring Commercial
314 Ella T. Grasso Avenue, Torrington, CT 06790
Tel. 800-492-7464 • Fax 860-496-9008

waringcommercialproducts.com

19WC058218 / REV 09/19

Item # _____
Quantity _____
R0015
C.S.I. Section 11400

HOBART

701 S Ridge Avenue, Troy, OH 45374
1-888-4HOBART • www.hobartcorp.com

2812 SLICER

STANDARD FEATURES

- Home Position Start
- Close To Stop
- Gauge Plate Interlock
- Carriage System Interlock
- No Volt Release
- Exclusive Tilting, Removable Carriage System
- CleanCut™ Knife
- Top Mounted Borazon Stone Sharpener
- Hobart Poly V-Belt Drive System
- Sanitary Anodized Aluminum Base
- Double-Action Indexing Cam
- Permanently Mounted Ring Guard
- Heavy Gauge Stainless Steel Knife Cover
- Cleaning Leg
- Removable Rear Deflector
- ½ H.P. Knife Drive Motor
- Nylon Carriage Roller
- Electroless Nickel Plated Single Slide Rod with Reservoir Wick
- Stainless Steel Carriage
- Ergonomic Style Handle

MODEL

❑ 2812 – Smart Features Manual Slicer

ACCESSORIES

❑ Low Fence
❑ High Fence
❑ Food Chute
❑ Heavy Meat Grip
❑ 4" Legs
❑ Product Tray

Specifications, Details and Dimensions on Inside and Back.

HOBART

2812 SLICER

HOBART
701 S Ridge Avenue, Troy, OH 45374
1-888-4HOBART • www.hobartcorp.com

SOLUTIONS / BENEFITS

Home Start Position
Maximizes yield
- Carriage must be in "home position" before the slicer will start, ensuring full loaf slices

Close To Stop
Convenience, labor savings, energy savings, protection
- Closing of gauge plate turns off the slicer
- Protects knife edge

Gauge Plate Interlock
Ease of cleaning, protection
- Gauge plate must be closed to remove or tilt away carriage for cleaning and cannot be opened when carriage is tilted back or removed
- Protects knife edge during cleaning procedures

Carriage System Interlock
Protection
- Will not tilt away or remove if gauge plate indicator is not closed

No Volt Release
Protection
- Protects against unintentional starting of slicer
- Slicer must be restarted if power fails or slicer is unplugged

Exclusive Tilting, Removable Carriage System
Reduces labor, improves sanitation
- Tilt design allows for ease of midday cleaning
- Removable for complete cleaning and sanitation procedures

CleanCut™ Knife
Reduced cost of ownership, improved yield
- Thin edge design improves yield
- Super alloy edge lasts longer

Top Mounted Borazon Stone Sharpener
Ease of use, improved sanitation, reduced costs
- Single action sharpens and hones in just five seconds
- Removable and submersible for easy cleaning and sanitation
- Lifetime guaranteed Borazon sharpening stones provide maximum performance with reduced maintenance costs

Poly V-Belt Drive System
Performance, durability, reduced maintenance
- Patented design extends belt life while producing optimal slicing results
- Quieter operating slicer

Sanitary Anodized Aluminum Base
Improved sanitation, labor savings
- One piece base protects against possible growth of bacteria
- No cracks/crevices or bolt holes where product can lodge and bacteria may grow
- Easy cleanup and durable finish

Double-Action Indexing Cam
Increases reliability, easier to use, increased yield
- The first full revolution of the indexing knob provides precise control for shaving, chipping and thin slicing
- The second revolution opens the gauge plate quickly for thicker slicing
- Gauge plate holds position for consistent, precision slicing

Permanently Mounted Ring Guard
Protection
- Protects knife during operation and cleaning

Heavy Gauge Stainless Steel Knife Cover
Durability, ease of use, sanitation
- Twelve-gauge stainless steel maintains shape to ensure consistent fit
- Spring loaded knob for quick removal and easy cleanup
- One piece design for simplistic usage

Cleaning Leg
Improved sanitation, ease of use
- Props machine for easy cleaning underneath slicer

Removable Rear Deflector
Improved sanitation, ease of use
- Allows access for thorough cleaning
- No tools required means easy removal during cleaning

½ H.P. Knife Drive Motor
Durability, performance
- Reserve power runs at 400 rpm for optimum results

Nylon Carriage Roller
Performance
- Easy movement for manual operation

Electroless Nickel Plated Single Slide Rod with Reservoir Wick
Performance, durability, lower maintenance
- Smooth operation with continuous lubrication of carriage rod
- Resistant to rust

Stainless Steel Carriage
Improved sanitation, durability
- Maximum sanitation with minimum cleanup time
- Corrosion resistant, impact resistant

Ergonomic Style Handle
Operator satisfaction
- Comfortable manual operation

Meat Grip Options
Multiple choices for improved yield and consistency
- Front meat grip standard
- Heavy front meat grip available

SPECIFICATIONS

HOME POSITION START: Home-start ensures carriage is in a convenient position before starting the slicer.

CLOSE TO STOP: After slicing, a quick turn of the index knob to the closed position turns off the slicer.

GAUGE PLATE INTERLOCK: Gauge plate interlock protects knife edge when indicator is closed.

CARRIAGE SYSTEM INTERLOCK: Carriage will not tilt away or remove if gauge plate not closed.

NO VOLT RELEASE: In the event of power loss, slicer must be restarted before operation can continue.

TILTING REMOVABLE CARRIAGE SYSTEM: Positive angle carriage design enables operator to slice without manual feed. The stainless steel carriage system tilts back easily for midday cleaning and is removable for thorough cleaning and sanitation procedures. The carriage has 12½" manual travel.

CLEANCUT™ KNIFE: Another Hobart exclusive, the knife is constructed of 304L stainless steel and high performance super alloy. Knife is protected by a permanently mounted ring guard with integrated product deflector. The stainless steel knife cover provides easy access for cleaning. Gauge plate protects knife edge when indicator is closed. Knife cover is quickly removed with a quarter turn of the spring loaded locking knob.

TOP MOUNTED BORAZON STONE SHARPENER: One lever operation utilizing two Borazon stones to sharpen and hone in five seconds. Removable and top mounted. When sharpener is removed for cleaning, knife edge is shielded. Borazon stones have lifetime guarantee.

HOBART POLY V-BELT DRIVE SYSTEM: Knife is driven by a Hobart Poly V belt and runs at 400 rpm for optimal performance.

SANITARY ANODIZED ALUMINUM BASE: One-piece base protects against possible growth of bacteria. All surfaces are durable and smooth, presenting no holes or crevices in which food can lodge. Easy clean-up and durable finish to withstand harsh cleaning products.

DOUBLE-ACTION INDEXING CAM: First revolution of index cam for precision slicing; second revolution for thicker slicing selection. Indexing cam holds true to setting during slicing operation.

PERMANENTLY MOUNTED RING GUARD: Permanently mounted ring guard with integrated product deflector protects knife during operation and cleaning.

HEAVY GAUGE STAINLESS STEEL KNIFE COVER: One piece design made of 12 gauge stainless steel, durable to maintain shape and ensure consistent fit. Spring loaded knob for quick removal and replacement.

CLEANING LEG: Cleaning leg supports the slicer in tilted position for cleaning beneath the machine.

REMOVABLE REAR DEFLECTOR: No tools are required for removal of the deflector for thorough cleaning of the slicer.

KNIFE MOTOR: ½ H.P., permanently lubricated ball bearings. Single phase capacitor-start, induction run.

ELECTROLESS NICKEL PLATED SINGLE SLIDE ROD WITH RESERVOIR WICK: Transport slide rod is E-Nickel electroless plated. Slide rod bearings feature an oil reservoir/oil wick.

FINISH: Stainless steel carriage, gauge plate and knife cover. Anodized aluminum base.

ERGONOMIC STYLE HANDLE: Specially designed for ease of use during manual operation.

MEAT GRIP: Front mounted grip is high strength thermoplastic. Swings out of way when not in use.

ELECTRICAL SPECIFICATIONS: 120/60/1 – U L Listed. Also available in 100/50/60/1 and 230/50/1 (2.5 amps) – not submitted for U L Listing.

SWITCH: Moisture protected toggle type, operated by a push-pull rod.

CORD & PLUG: 6-foot, three-wire power supply cord and plug. Plug not furnished on export models.

CAPACITY: The carriage will take food up to 12" in width or 7½" in diameter.

GAUGE PLATE: Gauge plate is a heavy aluminum casting with ribbed laminated stainless steel face for smooth feeding. Adjustable to cut any thickness of slice up to 1".

WARRANTY: All parts and service coverage for one year including knife. Lifetime guarantee on Borazon stones in the sharpening system.

WEIGHTS FOR THE FOLLOWING ITEMS: Tubular Chute 9.1 lbs.; Swing Arm .61 lbs.; Heavy Front Meat Grip 2.76 lbs.; Heavy Handle 2.7 lbs.; Standard Meat Grip 2.34 lbs.

WEIGHT: Shipping 135 lbs., Net 96 lbs.

HOBART
701 S Ridge Avenue, Troy, OH 45374
1-888-4HOBART • www.hobartcorp.com

DETAILS AND DIMENSIONS

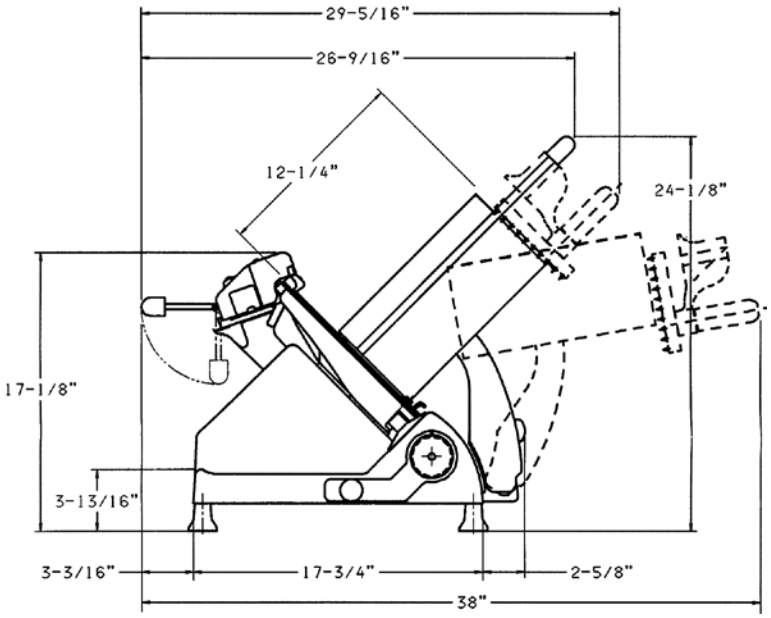

WARNING

ELECTRICAL AND GROUNDING CONNECTIONS MUST COMPLY WITH THE APPLICABLE PORTIONS OF THE NATIONAL ELECTRICAL CODE AND/OR OTHER LOCAL ELECTRICAL CODES.

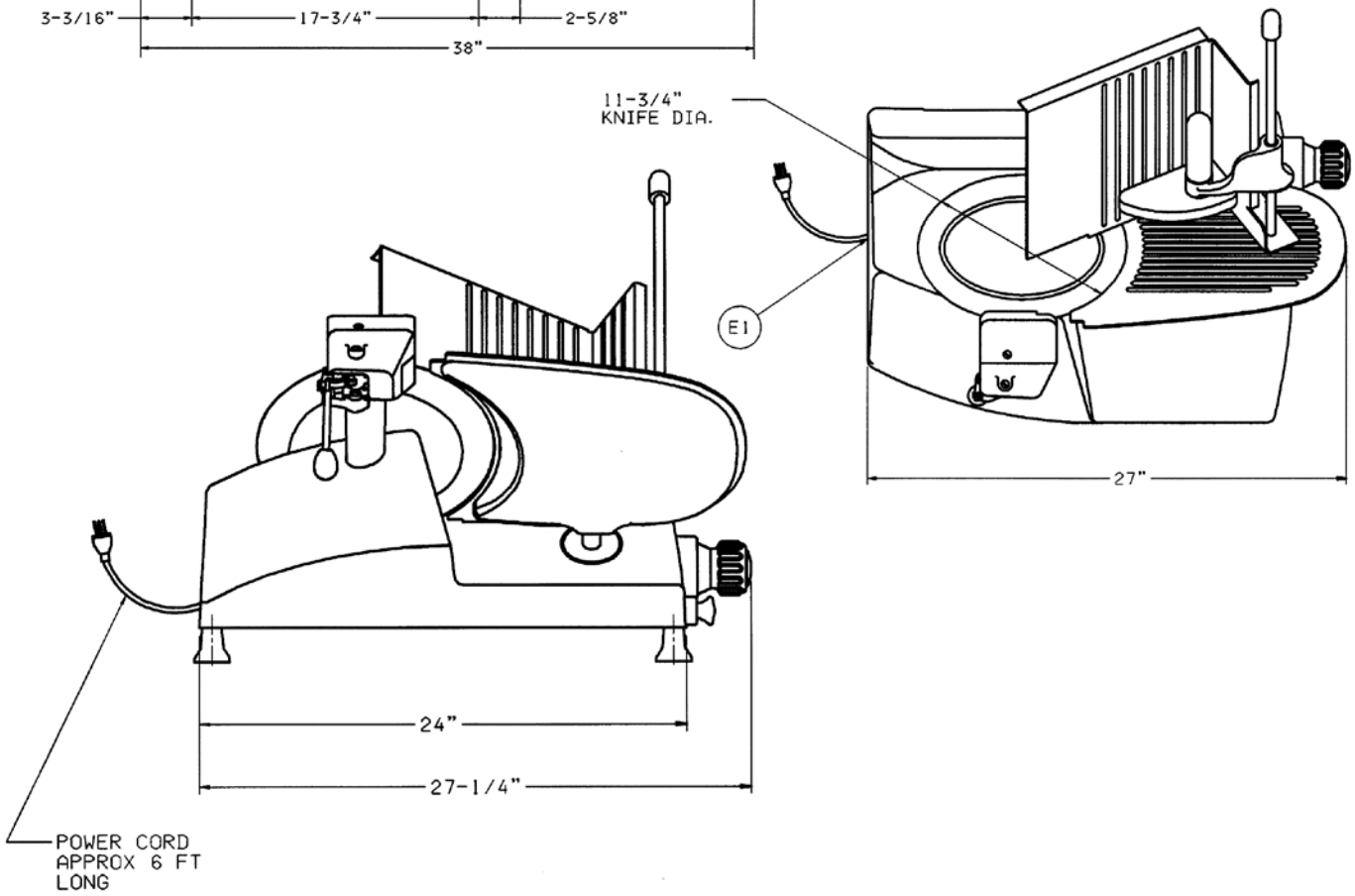

As continued product improvement is a policy of Hobart, specifications are subject to change without notice.

LITHO IN U.S.A. (H-01) Printed On Recycled Paper

R0017

Item # _____

Job _____

SUPER ADJUSTABLE SUPER ERECTA™

STEM CASTER CARTS – WIRE SHELVES

- **Stem Caster Carts** combine Super Adjustable Super Erecta™ wire shelving features with the mobility of stem casters to provide a high-quality, strong and versatile material handling cart.
- **Unique Design:** Open wire surfaces minimize dust accumulation and allow a free circulation of air and greater visibility.
- **Easily Assembled:** The Corner Release System and SiteSelect Posts, combined with the original "bottom up" assembly process, creates a complete shelving system in minutes, without tools! SiteSelect Posts with the double-groove visual guide feature, have circular grooves at 1" (25mm) intervals and are numbered at 2" (50mm) intervals. Shelves simply seat into place using the Corner Release.
- **Unique Post Design:** New SiteSelect post design provides a visual guide for positioning and adjusting shelves, saving considerable time during assembly and adjustment. An easy-to-identify triple groove, every 8 inches (203mm), offers a quick way to align all shelves. Bolt leveler on post bottom compensates for uneven surfaces.
- **Easily Adjustable:** Unique Corner Release and SiteSelect Posts create a total system that offers "Tool-Free", fast adjustment at 1" (25mm) intervals along the entire height of the posts.
- **Versatile Construction:** Super Adjustable Super Erecta™ wire shelving can change as quickly as your needs change. By using various accessories, hundreds of shelving combinations become possible.
- **Variety of Casters Available:** Select the caster that allows the right combination of rollability and maneuverability to suit your requirements. Casters are available in swivel, rigid or brake types. All Metro casters are non-marking and come complete with a 3½" (89mm) donut bumper. Refer to sheet #11.20 for additional caster information.

InterMetro Industries Corporation
North Washington Street
Wilkes-Barre, PA 18705
www.metro.com

Copyright © 2000 InterMetro Industries Corp.

Job _____

SUPER ADJUSTABLE SUPER ERECTA™

STEM CASTER CARTS – WIRE SHELVES

STANDARD UNITS

Consist of four shelves, posts, plastic split sleeves*, donut bumpers and designated casters.**

Shelf Width (in.)	Shelf Length (in.)	Catalog Number with Casters: Four Swivel Resilient Rubber Casters	Two Swivel Two Brake Resilient Rubber Casters	Four Swivel Polyuerthane Casters	Two Swivel Two Brake Polyuerthane Casters
With Super Erecta Brite™ Shelves & Plated Posts 63"(1600mm) Posts – Overall Height 69" (1753mm)					
18 (455)	36 (910)	A336ABR	A336BBR	A336DBR	A336EBR
18 (455)	48 (1220)	A356ABR	A356BBR	A356DBR	A356EBR
18 (455)	60 (1520)	A366ABR	A366BBR	A366DBR	A366EBR
21 (530)	36 (910)	A436ABR	A436BBR	A436DBR	A436EBR
21 (530)	48 (1220)	A456ABR	A456BBR	A456DBR	A456EBR
21 (530)	60 (1520)	A466ABR	A466BBR	A466DBR	A466EBR
24 (610)	36 (910)	A536ABR	A536BBR	A536DBR	A536EBR
24 (610)	48 (1220)	A556ABR	A556BBR	A556DBR	A556EBR
24 (610)	60 (1520)	A566ABR	A566BBR	A566DBR	A566EBR
With Chrome Shelves & Plated Posts 63" (1600mm) Posts – Overall Height 69" (1753mm)					
18 (455)	36 (910)	A336AC	A336BC	A336DC	A336EC
18 (455)	48 (1220)	A356AC	A356BC	A356DC	A356EC
18 (455)	60 (1520)	A366AC	A366BC	A366DC	A366EC
21 (530)	36 (910)	A436AC	A436BC	A436DC	A436EC
21 (530)	48 (1220)	A456AC	A456BC	A456DC	A456EC
21 (530)	60 (1520)	A466AC	A466BC	A466DC	A466EC
24 (610)	36 (910)	A536AC	A536BC	A536DC	A536EC
24 (610)	48 (1220)	A556AC	A556BC	A556DC	A556EC
24 (610)	60 (1520)	A566AC	A566BC	A566DC	A566EC

TO ORDER BY COMPONENTS

1. Order shelves from sheet 10.01A or price list. (Will be packed with plastic split sleeves*.)
2. Order stem casters from sheet 11.20 or price list. Donut bumper comes with caster.

* Aluminum split sleeves are recommended when unit will be towed, transported over the road or otherwise subjected to vibration or jolting. To order, see sheet #11.06 or price list.

LOAD RATING: not to exceed 3 times the caster load rating, or 800 lbs.(363kg).

NOTE: Traditional SuperErecta style stem caster units are available. Drop 'A' prefix in part number to specify.

Important: When ordering by components remember that stability decreases as the ratio of height to width increases. Units should be kept as wide and low as possible.

Manufactured by:

InterMetro Industries Corporation
North Washington Street, Wilkes-Barre, PA 18705
Phone: 570-825-2741 • Fax: 570-825-2852
For Product Information Call: 1-800-433-2232
Visit Our Web Site: www.metro.com

L02-035
Rev. 9/00
Printed in U.S.A.

Information and specifications are subject to change without notice. Please confirm at time of order.

Project: _____ Date: _____ Approval: _____ Qty: ____ Item #: 600PR1820Z

R0018

Regency Space Solutions

REGENCY
Space Solutions

Regency 20 Pan End Load Nesting Bun / Sheet Pan Rack - Unassembled

#600PR1820Z

Technical Data

Length	26 Inches
Width	20 Inches
Height	69 Inches
Assembled	Assembly Required
Capacity	160 lb.
Casters	With Casters
Color	Silver
Features	Freezer Safe NSF Listed
Individual Shelf Capacity	55 lb.

Features

- Holds up to 20 full size or 40 half size sheet pans; 160 lb. evenly distributed load capacity
- Nesting design for easy storage
- Ships unassembled to save money on freight
- 3'' of space between ledges; 2'' of space between pans
- Rail-type ledges support pans during transportation; (4) 5" casters provide easy mobility

Certifications

NSF Listed Freezer Safe

© 2024 Regency Space Solutions