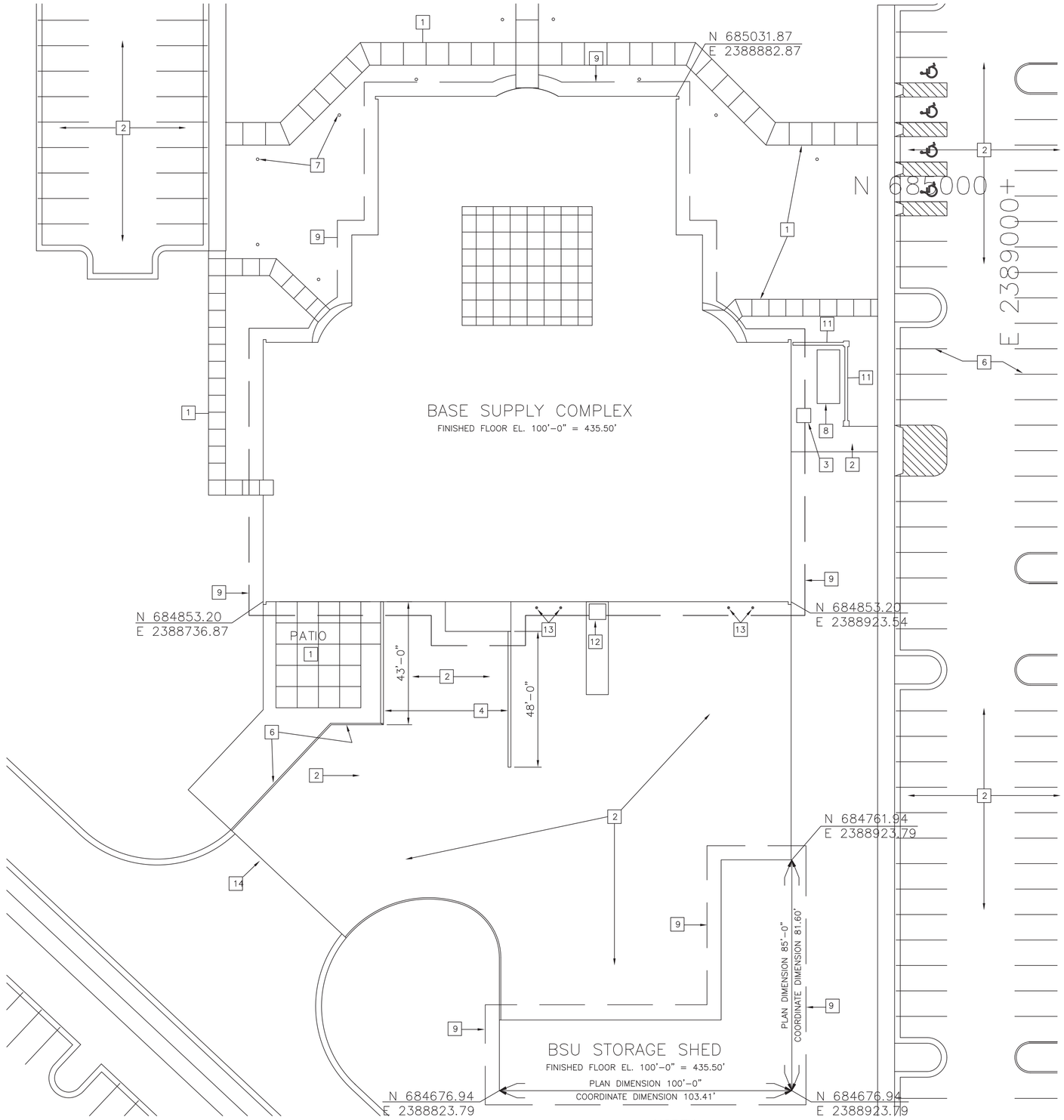

SITE PLAN
SCALE: 1/16"= 1'- 0"

GENERAL NOTES:

1. THE LIMITS OF CONSTRUCTION ARE SET AT FIVE FEET OUT SIDE OF THE BUILDING FACE.
2. THE FINAL GRADING AND LANDSCAPING WILL OCCURE WITHIN THE FIVE FOOT BOUNDARY, BUT WILL BE DONE UNDER SEPARATE CONTRACT.
3. THE PAVING AREA WITHIN THE SOUTH SIDE SERVICE COURT WILL BE DONE WITHIN THE SCOPE OF THE SITE CIVIL PAVING WORK AND IS NOT WITHIN THIS CONTRACT FOR CONSTRUCTION.
4. THE CONSTRUCTION OF THE CHILLER AND OTHER MECHANICAL PADS ARE WITHIN THE SCOPE OF THIS CONTRACT, UNLESS NOTED OTHERWISE. SEE DTL. 10/SHT. S0-2
5. THE PROTECTION BOLLARDS SHOWN ARE WITHIN THE SCOPE OF THIS CONTRACT.
6. THE MASONARY SCREEN WALL LOCATED ADJACENT TO THE CHILLER IS WITHIN THE SCOPE OF THIS CONTRACT. SEE DETAIL 1/A1.1 BELOW.
7. THE SITE/ CIVIL CONTRACTS WALKWAYS SHOWN WILL EXTEND UP TO THE FACE OF BUILDING.
8. CONCRETE PADS FOR TRANSFORMER AND DUMPSTER ARE N.I.C.
9. BUILDING COORDINATES ARE LOCATED AT EXTERIOR FACE OF FOUNDATION WALL.

KEYED NOTES:

1. CONCRETE PAVING- N.I.C.
2. 5" ASPHALTIC CONCRETE PAVING- R.F.P. #82
3. TRANSFORMER - N.I.C.
4. RETAINING WALL, SEE STRUCTURAL DWGS .
5. CONC. LOADING DOCK .
6. PARKING LINE MARKINGS - N.I.C..
7. BOLLARDS LIGHTS - N.I.C.
8. CHILLER AND CONC. PAD.
9. LIMITS OF CONSTRUCTION, 5'-0" FROM BUILDING FACE.
10. CONCRETE DUMPSTER PAD - N.I.C.
11. MASONRY SCREEN WALL.
12. DUMPSTER.
13. PIPE BOLLARDS.
14. FENCE & GATE. - N.I.C.

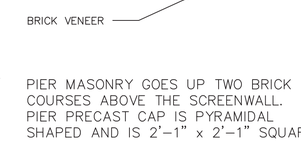

PIER MASONRY GOES UP TWO BRICK COURSES ABOVE THE SCREENWALL. PIER PRECAST CAP IS PYRAMIDAL SHAPED AND IS 2'-1" x 2'-1" SQUARE.

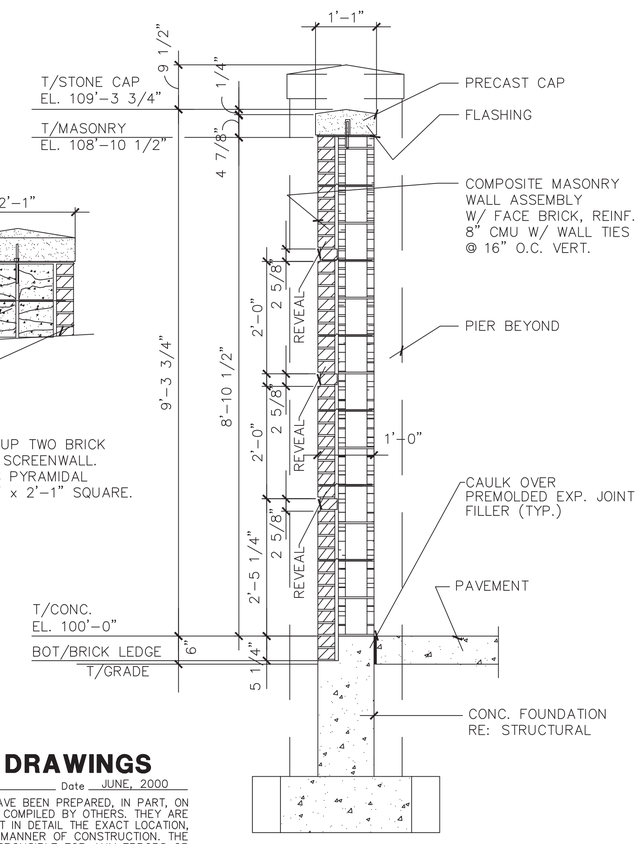

1 A1.1 SECTION AT SCREEN WALL
SCALE: 3/4"=1'-0"

RECORD DRAWINGS

Revisions Drawn by MAG Date JUNE, 2000

THESE RECORD DRAWINGS HAVE BEEN PREPARED, IN PART, ON THE BASIS OF INFORMATION COMPILED BY OTHERS. THEY ARE NOT INTENDED TO REPRESENT IN DETAIL THE EXACT LOCATION, TYPE OF COMPONENT NOR MANNER OF CONSTRUCTION. THE ENGINEER WILL NOT BE RESPONSIBLE FOR ANY ERRORS OR OMISSIONS WHICH HAVE BEEN INCORPORATED INTO THE RECORD DRAWINGS.

Symbol	Description	Date	Appr.
	RECORD DRAWING	6/00	MAG

Designed by: CAD/TEAM Date: 7/14/98
Dwn. by: ST/TEAM Design File No.: BSUA1.1
Reviewed by: TK Drawing Code:
Submitted by: DLS File Name: BSUA1-1
Chief, Plot Date:
Plot Scale: 1 TO 1

126th Air Refueling Wing
Illinois Air National Guard
Scott Air Force Base
Belleville, Illinois

The Benham Group
3668 South Geyer Road
St. Louis, Missouri 63127-1243
(314)821-7017 FAX(314)821-8499
Architects/Engineers/Planners

BASE SUPPLY COMPLEX

ARCHITECTURAL SITE PLAN

Sheet Reference Number:
A1.1
Sheet 5 of 93

Bar is 1" on original 22x34 sheet

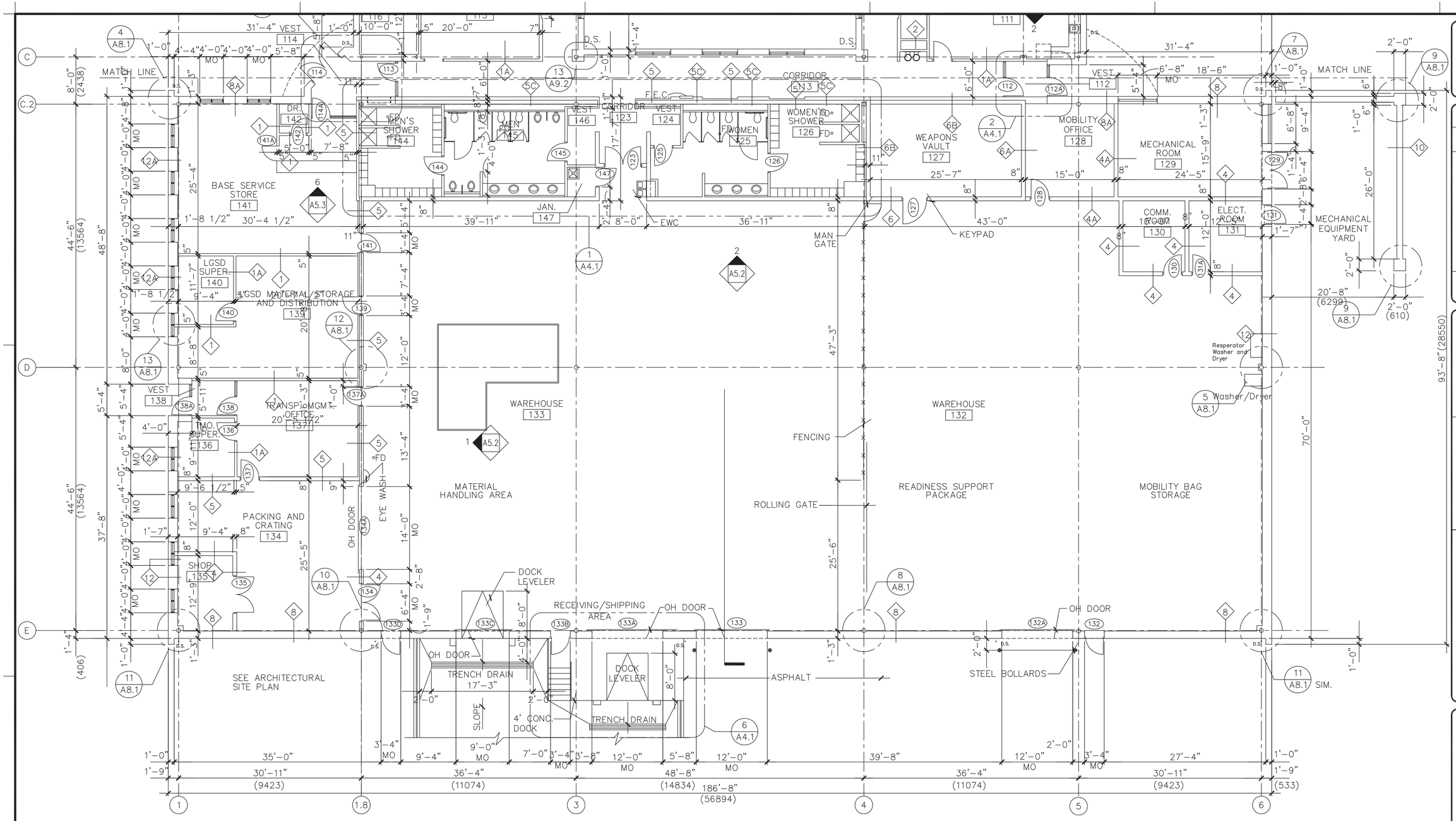

PARTIAL PLAN
SCALE: 1/8"=1'-0"

NORTH

RECORD DRAWINGS

Revisions Drawn by MAG Date JUNE, 2000

THESE RECORD DRAWINGS HAVE BEEN PREPARED, IN PART, ON THE BASIS OF INFORMATION COMPILED BY OTHERS. THEY ARE NOT INTENDED TO REPRESENT IN DETAIL THE EXACT LOCATION, TYPE OF COMPONENT NOR MANNER OF CONSTRUCTION. THE ENGINEER WILL NOT BE RESPONSIBLE FOR ANY ERRORS OR OMISSIONS WHICH HAVE BEEN INCORPORATED INTO THE RECORD DRAWINGS.

Bar is 1" on original 22x34 sheet

Symbol	Description	Date	Appr.
	RECORD DRAWING	6/00	MAG

126th AIR REFUELING WING

Designed by: CAD/TEAM
Dwn. by: SL/TEAM
Reviewed by: TK
Submitted by: DLS
Chief,
Date: 7/14/98
Design File No.:
Drawing Code:
File Name:
Plot Date:
Plot Scale: 1 TO 1

126th Air Refueling Wing
Illinois Air National Guard
Scott Air Force Base
Belleville, Illinois

The Benham Group
3668 South Geyer Road
St. Louis, Missouri 63127-1243
(314)821-7017 FAX(314)821-8499
Architects/Engineers/Planners

BASE SUPPLY COMPLEX

PARTIAL FLOOR PLAN – SOUTH

Sheet Reference Number:

A2.3

Sheet 8 of 93

Drawing: O:\126ARW\CAD\BSU\A\BSUA2-3 Saved: 06/17/1998 13:50 By: CS1 DimScale: 0.00 (TM=0) XRefs: BSUTSHT GEN\BSUPLNA1

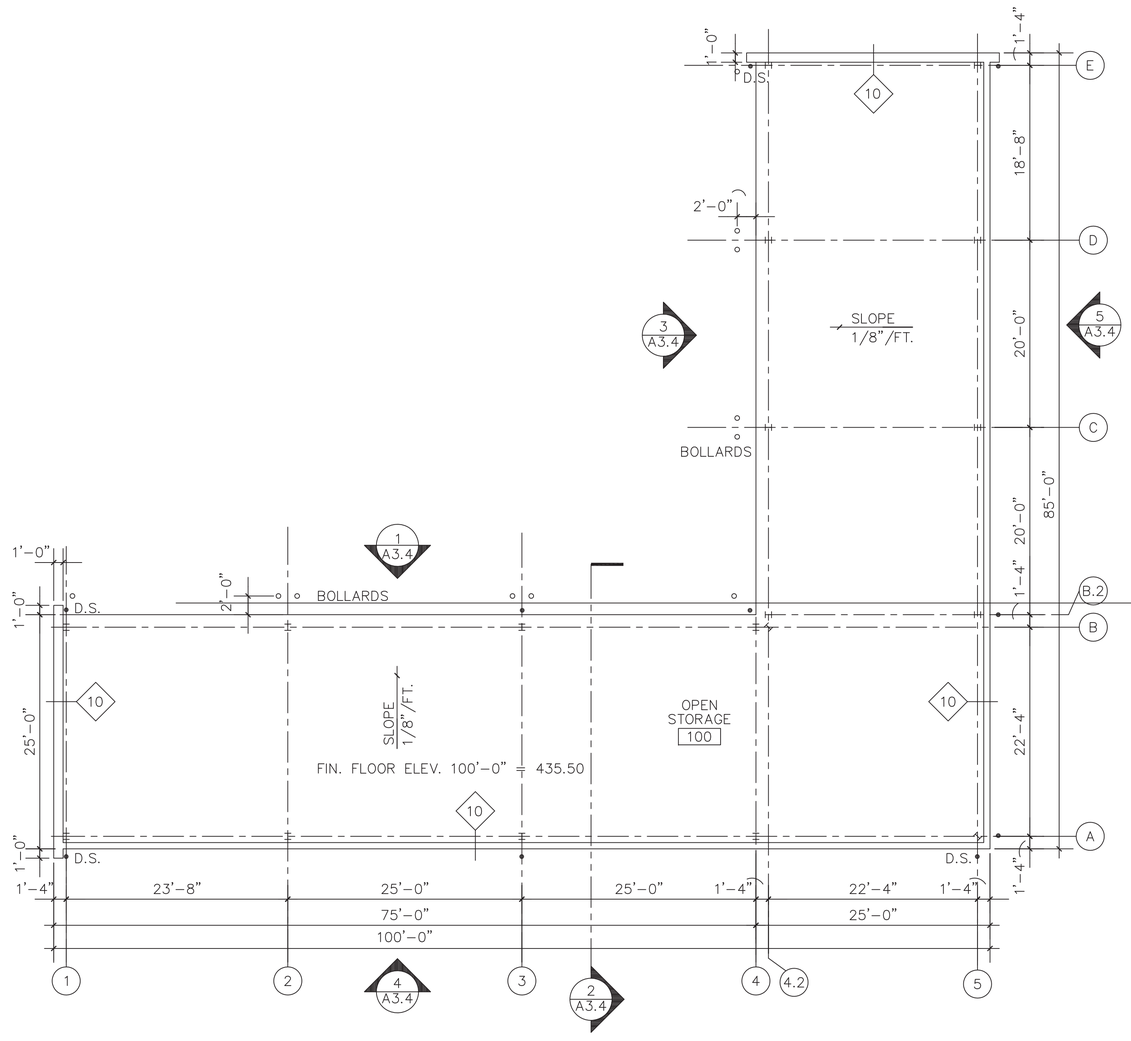

FLOOR PLAN
SCALE: 1/8"=1'-0"

NORTH

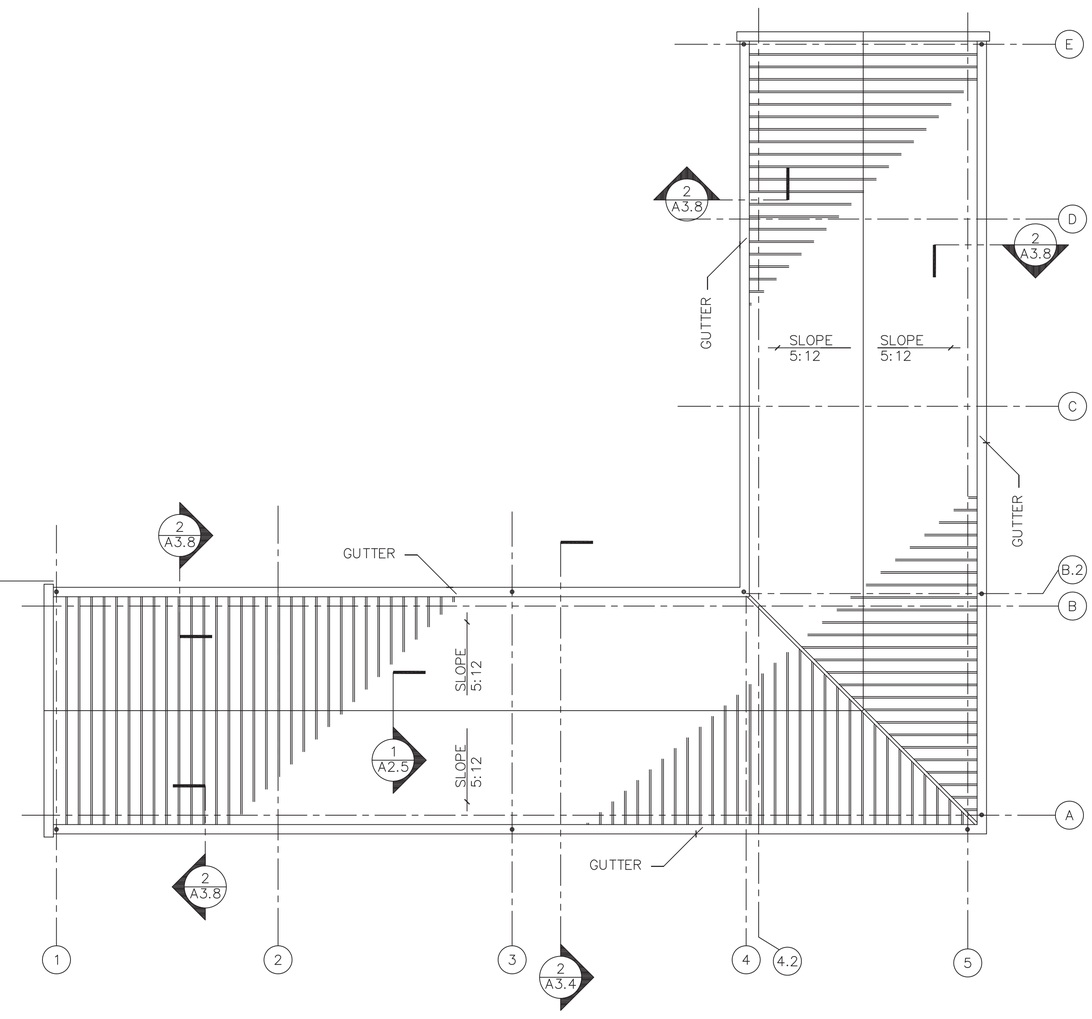

ROOF PLAN
SCALE: 1/8"=1'-0"

NORTH

RECORD DRAWINGS

Revisions Drawn by MAG Date JUNE, 2000

THESE RECORD DRAWINGS HAVE BEEN PREPARED, IN PART, ON THE BASIS OF INFORMATION COMPILED BY OTHERS. THEY ARE NOT INTENDED TO REPRESENT IN DETAIL THE EXACT LOCATION, TYPE OF COMPONENT NOR MANNER OF CONSTRUCTION. THE ENGINEER WILL NOT BE RESPONSIBLE FOR ANY ERRORS OR OMISSIONS WHICH HAVE BEEN INCORPORATED INTO THE RECORD DRAWINGS.

Symbol	Description	Date	Appr.
	RECORD DRAWING	6/00	MAG

Designed by: CAD/TEAM Date: 7/14/98
Dwn. by: SL/TEAM Design File No.:
Reviewed by: TK Drawing Code:
Submitted by: DLS File Name:
Chief, Plot Date:
Plot Scale: 1 TO 1

126th Air Refueling Wing
Illinois Air National Guard
Scott Air Force Base
Belleville, Illinois

The Benham Group
3668 South Geyer Road
St. Louis, Missouri 63127-1243
(314)821-7017 FAX(314)821-8499
Architects/Engineers/Planners

BASE SUPPLY COMPLEX

STORAGE SHED
FLOOR AND ROOF PLAN

Sheet Reference Number:
A2.4
Sheet 9 of 93

Bar is 1" on original 22x34 sheet

Drawing: O:\126ARW\CAD\BSU\A\BSUA2-4 Saved: 06/17/1998 13:51 By: CS1 DimScale: 0.00 (TM=0) XRefs: BSUTSHT BSSBROOF BSSBPLAN

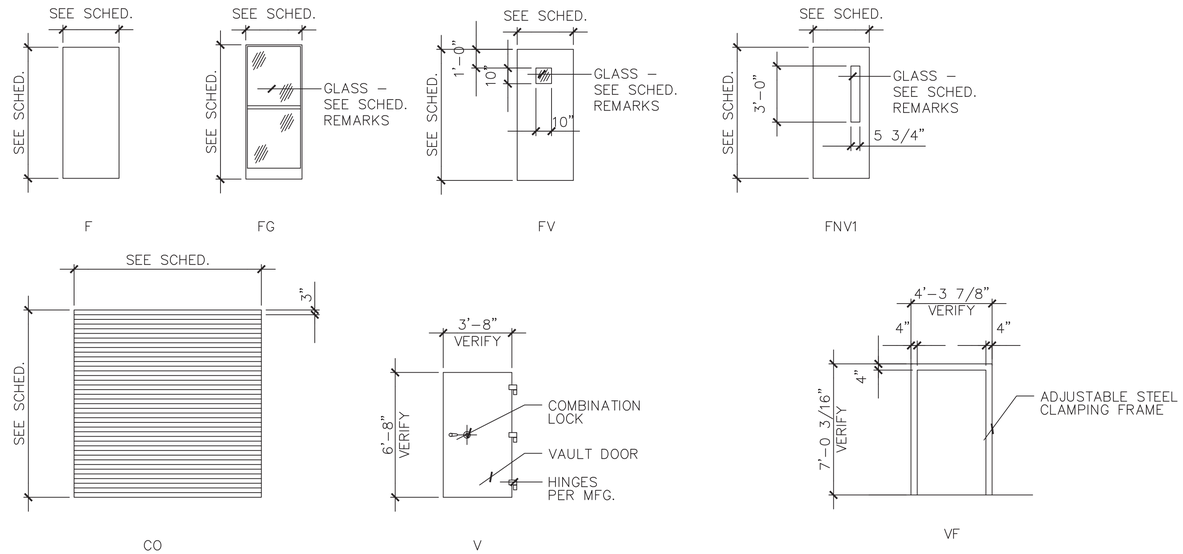

DOOR TYPES

STEEL VAULT DOOR FRAME

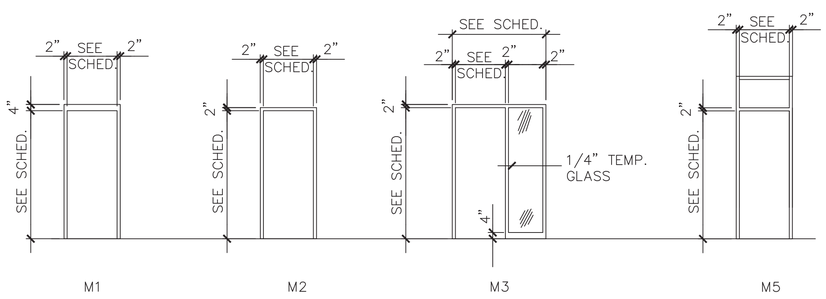

HOLLOW METAL FRAME TYPES

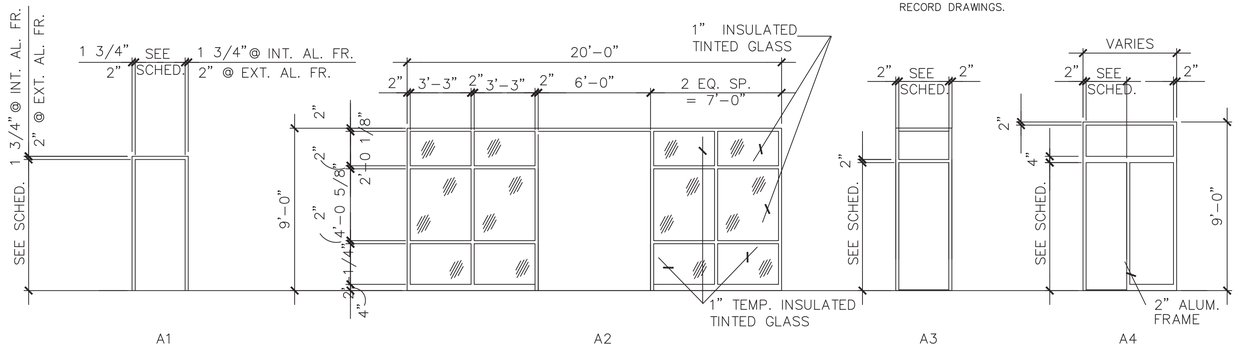

STOREFRONT FRAME TYPES

RECORD DRAWINGS

Revisions Drawn by MAG Date JUNE, 2000

THESE RECORD DRAWINGS HAVE BEEN PREPARED, IN PART, ON THE BASIS OF INFORMATION COMPILED BY OTHERS. THEY ARE NOT INTENDED TO REPRESENT IN DETAIL THE EXACT LOCATION, TYPE OF COMPONENT NOR MANNER OF CONSTRUCTION. THE ENGINEER WILL NOT BE RESPONSIBLE FOR ANY ERRORS OR OMISSIONS WHICH HAVE BEEN INCORPORATED INTO THE RECORD DRAWINGS.

DOOR SCHEDULE

DOORS					FRAMES					FIRE RATING LABEL	HDW. SET	REMARKS	NO.
NO.	SIZE	MTL.	TYPE	LOUVER	MTL.	TYPE	HEAD	JAMB	SILL				
100	PR3'–0"X 9'–0"X1 3/4"	AL	FG	–	AL	A2	2/A2.8	6/A2.8	11A2.8	–	1	8	100
101	PR3'–0"X 7'–0"X1 3/4"	AL	FG	–	AL	A3	6/A2.8	6A/2.8	–	–	2	1, 9	101
102	3'–0" X 7'–0" X 1 3/4"	WD	F	–	HM	M2	SIM. 3/A2.9	3/A2.9	–	–	16		102
103	3'–0" X 7'–0" X 1 3/4"	WD	F	–	HM	M2	SIM. 3/A2.9	3/A2.9	–	–	16		103
104	3'–0" X 7'–0" X 1 3/4"	WD	F	–	HM	M2	SIM. 3/A2.9	3/A2.9	–	–	16		104
105	3'–0" X 7'–0" X 1 3/4"	WD	FNV1	–	HM	M2	SIM. 3/A2.9	3/A2.9	–	–	16	9	105
106*	–	–	–	–	–	–	–	–	–	–	–	*NOT USED	
107	3'–0" X 7'–0" X 1 3/4"	WD	FNV1	–	HM	M2	13/A2.9	13/A2.9	–	–	16	9	107
108	PR3'–0"X 7'–0"X 1 3/4"	AL	FG	–	AL	A1	12/A2.9	11/A2.9	10/A2.8	–	6		108
109	3'–0" X 7'–0" X 1 3/4"	WD	FNV1	–	HM	M2	13/A2.9	13/A2.9	–	–	16	9	109
110	3'–0" X 7'–0" X 1 3/4"	WD	F	–	HM	M2	SIM. 3/A2.9	3/A2.9	–	–	16		110
111	3'–0" X 7'–0" X 1 3/4"	WD	FNV1	–	HM	M2	SIM. 3/A2.9	3/A2.9	–	–	16	9	111
112	3'–0" X 7'–0" X 1 3/4	AL	FG	–	AL	A4	6/A2.8	6/A2.8	–	–	4	1, 9	112
112A	3'–0" X 9'–0" X 1 3/4"	AL	FG	–	AL	A1	A2/2.8	6/A2.8	10/A2.8	–	3	8	112A
113	3'–0" X 7'–0" X 1 3/4"	AL	FG	–	AL	A4	6/A2.8	6/A2.8	–	–	4	1, 9	113
114	PR3'–0"X 9'–0"X 1 3/4"	AL	FG	–	AL	A1	2/A2.8	12/A8.4	10/A2.8	–	1	1, 8	114
114A	3'–0"X 7'–0"X1 3/4"	AL	FG	–	AL	A4	6/A2.8	6/A2.8	–	–	5	1, 9	114A
115	3'–0"X 7'–0" X 1 3/4"	WD	FNV1	–	HM	M2	SIM. 3/A2.9	3/A2.9	–	–	16	9	115
116	3'–0"X 7'–0"X1 3/4"	WD	F	–	HM	M2	SIM. 3/A2.9	3/A2.9	–	–	16		116
117	PR3'–0"X 7'–0"X 1 3/4"	AL	FG	–	AL	A1	12/A2.9	11/A2.9	10/A2.8	–	6	1	117
118	3'–0" X 7'–0" X 1 3/4"	WD	FNV1	–	HM	M2	13/A2.9	13/A2.9	–	–	17	9	118
118A	3'–0" X 7'–0" X 1 3/4"	WD	F	–	HM	M3	3/A2.8	14/A2.9	–	–	17	9	118A
119	3'–0" X 7'–0" X 1 3/4"	WD	FNV1	–	HM	M2	SIM. 3/A2.9	3/A2.9	–	–	16	9	119
120	3'–0" X 7'–0" X 1 3/4"	WD	F	–	HM	M2	SIM. 3/A2.9	3/A2.9	–	–	16		120
121	3'–0" X 7'–0" X 1 3/4"	WD	F	–	HM	M2	SIM. 3/A2.9	3/A2.9	–	–	16		121
122	3'–0" X 7'–0" X 1 3/4"	WD	F	–	HM	M2	SIM. 3/A2.9	3/A2.9	–	–	16		122
123	PR3'–0"X 7'–0"X1 3/4"	HM	FV	–	HM	M1	7/A2.9	12/A2.9	–	–	20	9	123
124*	–	–	–	–	–	–	–	–	–	–	–	*NOT USED	
125	3'–0" X 7'–0" X 1 3/4"	HM	F	–	HM	M2	SIM. 4/A2.9	4/A2.9	7/A2.8	–	19		125
126	3'–0" X 7'–0" X 1 3/4"	HM	FV	–	HM	M2	4/A2.9	4/A2.9	–	–	19	7, 9	126
127	3'–8" X 6'–8" X 1 3/4"	STL	V	–	STL	VF	5/A2.9	10/A2.9	9/A2.9	–	26	3	127
128	3'–0" X 7'–0" X 1 3/4"	HM	F	–	HM	M1	7/A2.9	12/A2.8	–	–	16		128
129	PR3'–0" X7'–0" X1 3/4"	HM	F	–	HM	M5	8/A2.8	5/A2.8	10/A2.8	–	7	7	129
130	3'–0" X 7'–0" X 1 3/4"	HM	F	–	HM	M1	7/A2.9	12/A2.8	3/A2.8	–	23		130
131	3'–0" X 7'–0" X 1 3/4"	HM	F	–	HM	M5	13/A2.8	5/A2.8	10/A2.8	–	8	4, 7	131
131A	3'–0" X 7'–0" X 1 3/4"	HM	F	–	HM	M1	7/A2.9	12/A2.8	–	–	23		131A
132	3'–0" X 7'–0" X 1 3/4"	HM	FV	–	HM	M5	2/A2.9	5/A2.8	10/A2.8	–	9	7, 9	132
132B*	–	–	–	–	–	–	–	–	–	–	–	*NOT USED	
132A	12'–0" X 12'–0"	STL	CO	–	STL	–	4/A2.8	9/A2.8	14/A2.8	–	–	2	132A
133	12'–0" X 10'–0"	STL	CO	–	STL	–	4/A2.8	9/A2.8	14/A2.8	–	–	2	133
133A	12'–0" X 10'–0"	STL	CO	–	STL	–	4/A2.8	9/A2.8	14/A2.8	–	–	2	133A
133B	3'–0" X 7'–0" X 1 3/4"	HM	FV	–	HM	M5	2/A2.9	5/A2.8	10/A2.8	–	9	4, 7, 9	133B
133C	9'–0" X 9'–0"	STL	CO	–	STL	–	4/A2.8	9/A2.8	14/A2.8	–	–	2	133C
133D	3'–0" X 7'–0" X 1 3/4"	HM	FV	–	HM	M5	2/A2.9	5/A2.8	10/A2.8	–	9	7, 9	133D
134	PR3'–0" X7'–0" X1 3/4"	HM	FV	–	HM	M1	7/A2.9	12/A2.8	–	–	20	9	134
134A	14'–0" X 10'–0"	STL	CO	–	STL	–	1/A2.9	6/A2.9	– SIM.	–	–	2	134A
135	PR3'–0" X7'–0" X1 3/4"	HM	F	–	HM	M1	7/A2.9	12/A2.8	–	–	25		135
136	3'–0" X 7'–0" X 1 3/4"	WD	F	–	HM	M2	SIM. 3/A2.9	3/A2.9	–	–	24		136
137	3'–0" X 7'–0" X 1 3/4"	WD	F	–	HM	M1	SIM. 7/A2.9	12/A2.8	3/A2.8	–	16		137
137A	3'–0" X 7'–0" X 1 3/4"	HM	F	–	HM	M1	8/A2.9	8/A2.9	–	–	23		137A
138	3'–0" X 7'–0" X 1 3/4"	AL	FG	–	AL	A4	SIM. 6/A2.8	6/A2.8	–	–	4	1	138
138A	3'–0" X 7'–0" X 1 3/4"	AL	FG	–	AL	A4	SIM. 6/A2.8	6/A2.8	–	–	3	1	138A
139	3'–0" X 7'–0" X 1 3/4"	HM	F	–	HM	M1	SIM. 8/A2.9	8/A2.9	3/A2.8	–	23		139
140	3'–0" X 7'–0" X 1 3/4"	WD	F	–	HM	M2	SIM. 3/A2.9	3/A2.9	–	–	16		140
141	3'–0" X 7'–0" X 1 3/4"	HM	FV	–	HM	M1	SIM. 8/A2.9	8/A2.9	3/A2.8	–	23	9	141
141A	3'–0" X 2'–10" X 1 3/4"	WD(Clad)	F	–	–	–	–	–	–	–	27	5	141A
142	3'–0" X 7'–0" X 1 3/4"	WD	F	–	HM	M2	SIM. 3/A2.9	3/A2.9	–	–	22		142
143*	–	–	–	–	–	–	–	–	–	–	–	*NOT USED	
144	3'–0" X 7'–0" X 1 3/4"	HM	FV	–	HM	M2	SIM. 4/A2.9	4/A2.9	–	–	19		144
145	3'–0" X 7'–0" X 1 3/4"	HM	F	–	HM	M2	SIM. 4/A2.9	4/A2.9	7/A2.8	–	19		145
146*	–	–	–	–	–	–	–	–	–	–	–	*NOT USED	
147	3'–0" X 7'–0" X 1 3/4"	HM	F	–	HM	M1	7/A2.9	12/A2.8	–	–	21		147

NOTE
1. With Glass Transom.
2. Overhead Coiling Door.
3. Class 5 Vault Door. Coordinate Rough Opening Size with Door Manf.
4. Insulated Hollow Metal Transom Panel.
5. Plastic Laminate Gate
6. Insulated Hollow Metal Door.
7. Galvanized Metal Door & Frame.
8. 1" Tempered Insulated Glass
9. 1/4" Tempered Glass

126th AIR REFUELING WING

Symbol	Description	Date	Appr.
	RECORD DRAWING	6/00	MAG

Designed by: CAD/CAD
Dwn. by: SL/TEAM
Reviewed by: TK
Submitted by: DLS
Chief,
Date: 7/14/98
Design File No.: BSUA2_7
Drawing Code:
File Name:
Plot Date:
Plot Scale: 1 TO 1

126th Air Refueling Wing
Illinois Air National Guard
Scott Air Force Base
Belleville, Illinois

The Benham Group
3668 South Geyer Road
St. Louis, Missouri 63127-1243
(314)821-7017 FAX(314)821-8499
Architects/Engineers/Planners

BASE SUPPLY COMPLEX

DOOR SCHEDULE & DETAILS

Sheet Reference Number:
A2.7
Sheet 12 of 93

Bar is 1" on original 22x34 sheet

Drawing: O:\126ARW\CAD\BSU\A\BSUA2-7 Saved: 06/29/1998 13:28 By: AD1 DimScale: 0.00 (TM=0) XRefs: BSUTSHT BSUSCHD BSU-DOOR

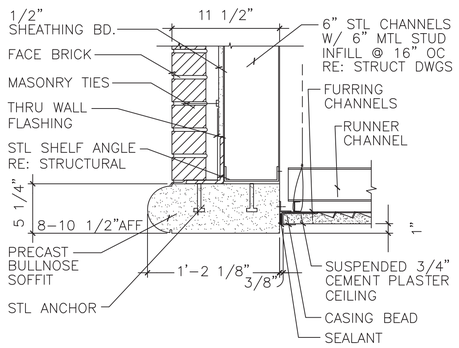

SOFFIT DETAIL @ ENTRY (1 / A2.8)
SCALE: 1 1/2" = 1'-0" B203023D

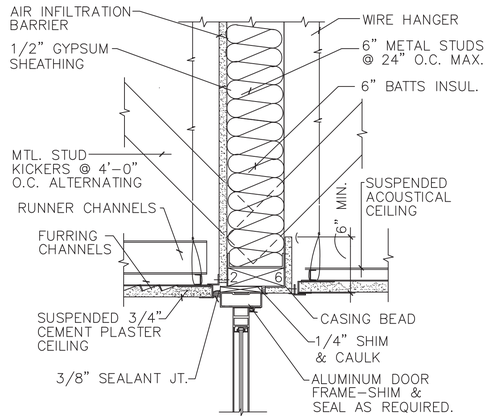

HEAD DETAIL @ ENTRY (2 / A2.8)
SCALE: 1 1/2" = 1'-0" C303004B

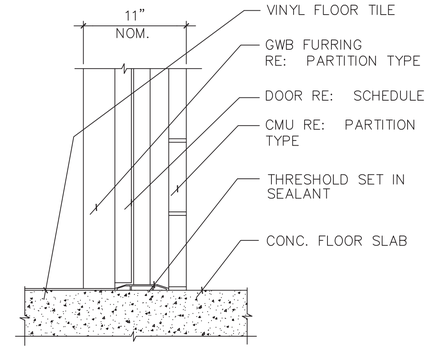

DOOR SILL DETAIL (3 / A2.8)
SCALE: 1 1/2" = 1'-0" T1000

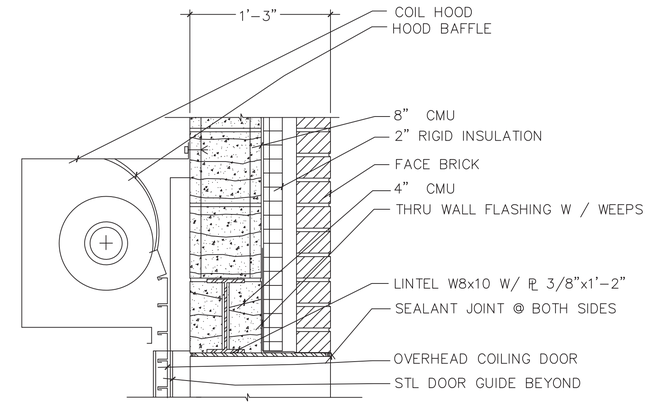

HEAD DETAIL (4 / A2.8)
SCALE: 1 1/2" = 1'-0" B203224A

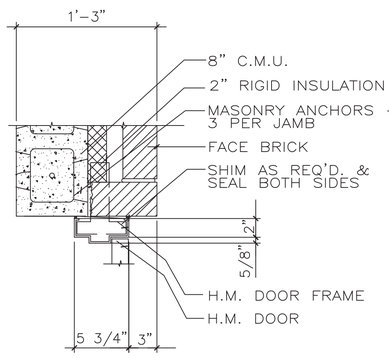

JAMB DETAIL (5 / A2.8)
SCALE: 1 1/2" = 1'-0" B203024D

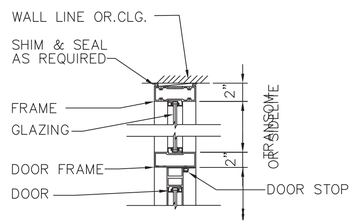

JAMB DETAIL (6 / A2.8)
SCALE: 1 1/2" = 1'-0" C101073A

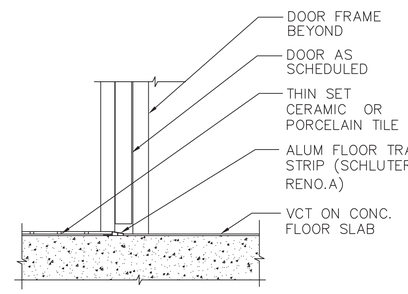

SILL DETAIL (7 / A2.8)
SCALE: 1 1/2" = 1'-0" C102025B

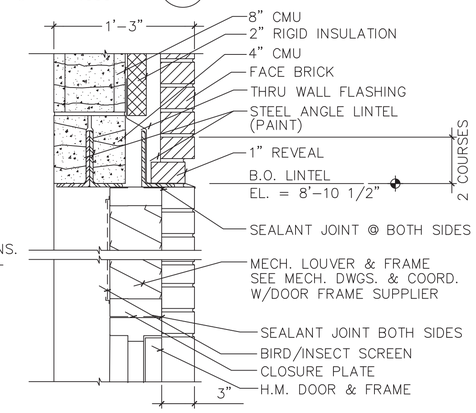

HEAD DETAIL (8 / A2.8)
SCALE: 1 1/2" = 1'-0" B203026L

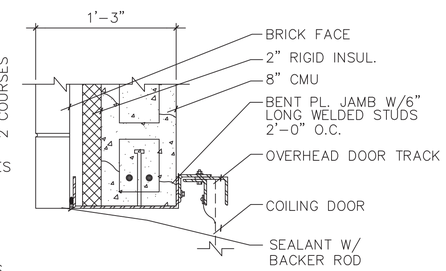

JAMB DETAIL (9 / A2.8)
SCALE: 1 1/2" = 1'-0" B203229B

NOTE:
INSTALL A BOX HEADER OF 6" METAL STUD MATERIAL OVER EACH WINDOW AND DOOR OPENING.

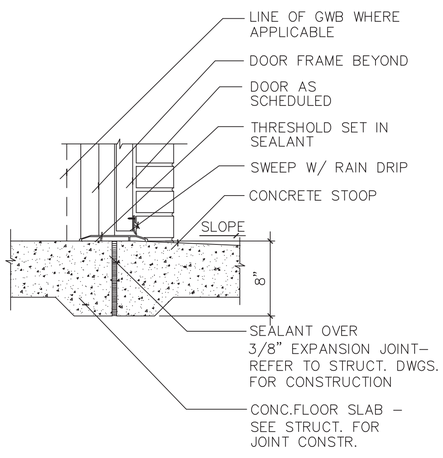

SILL DETAIL (10 / A2.8)
SCALE: 1 1/2" = 1'-0" B203045B

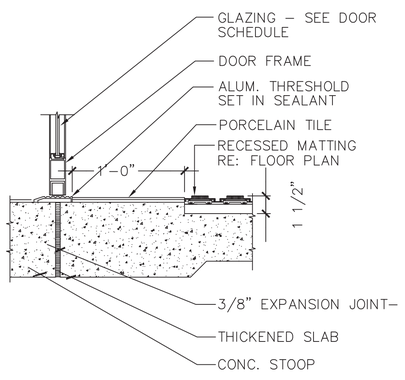

SILL DETAIL @ ENTRY (11 / A2.8)
SCALE: 1 1/2" = 1'-0" B203056B

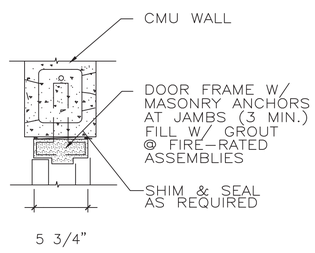

JAMB DETAIL (12 / A2.8)
SCALE: 1 1/2" = 1'-0" B203031A

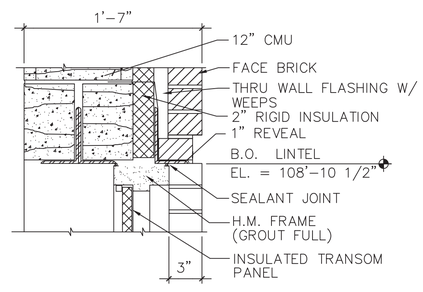

HEAD DETAIL (13 / A2.8)
SCALE: 1 1/2" = 1'-0" B203026G

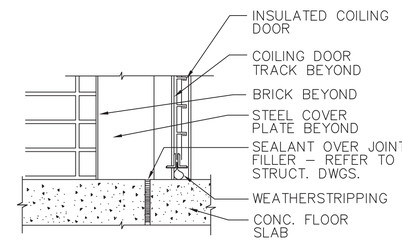

SILL DETAIL (14 / A2.8)
SCALE: 1 1/2" = 1'-0" B203225A

RECORD DRAWINGS

Revisions Drawn by MAG Date JUNE, 2000

THESE RECORD DRAWINGS HAVE BEEN PREPARED, IN PART, ON THE BASIS OF INFORMATION COMPILED BY OTHERS. THEY ARE NOT INTENDED TO REPRESENT IN DETAIL THE EXACT LOCATION, TYPE OF COMPONENT NOR MANNER OF CONSTRUCTION. THE ENGINEER WILL NOT BE RESPONSIBLE FOR ANY ERRORS OR OMISSIONS WHICH HAVE BEEN INCORPORATED INTO THE RECORD DRAWINGS.

Symbol	Description	Date	Appr.
	RECORD DRAWING	6/00	MAG

Designed by: CAD/TEAM Date: 7/14/98
Dwn. by: SL/TEAM Design File No.:
Reviewed by: TK Drawing Code:
Submitted by: DLS File Name: Plot Date:
Chief: Plot Scale: 1 TO 1

126th Air Refueling Wing
Illinois Air National Guard
Scott Air Force Base
Belleville, Illinois

The Benham Group
3668 South Geyer Road
St. Louis, Missouri 63127-1243
(314)821-7017 FAX(314)821-8499
Architects/Engineers/Planners

BASE SUPPLY COMPLEX

DOOR DETAILS

Sheet Reference Number:
A2.8
Sheet 13 of 93

Bar is 1" on original 22x34 sheet

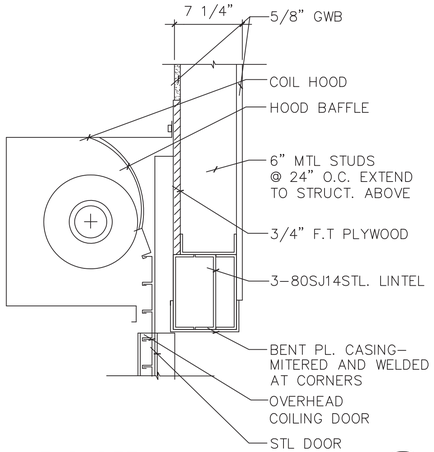

HEAD DETAIL (1 / A2.9)
SCALE: 1 1/2" = 1'-0" B203224B

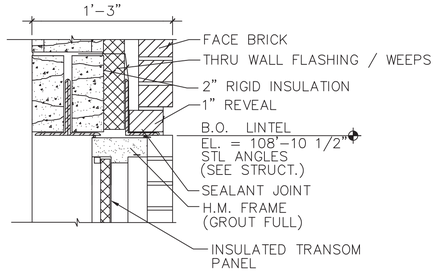

HEAD DETAIL (2 / A2.9)
SCALE: 1 1/2" = 1'-0" B203026F

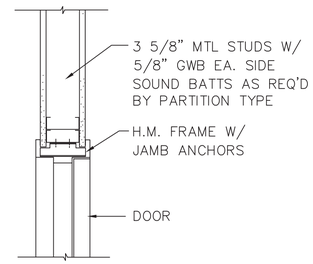

JAMB DETAIL (3 / A2.9)
SCALE: 1 1/2" = 1'-0" C102009A

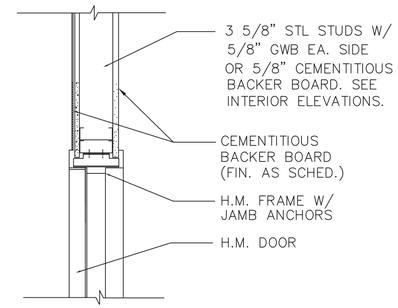

JAMB DETAIL (4 / A2.9)
SCALE: 1 1/2" = 1'-0" C102010A

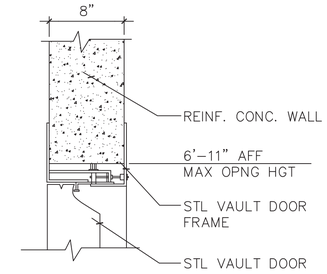

VAULT HEAD (5 / A2.9)
SCALE: 1 1/2" = 1'-0" V1001

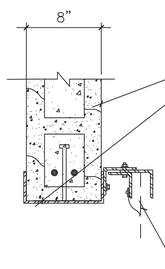

JAMB DETAIL (6 / A2.9)
SCALE: 1 1/2" = 1'-0" B203229C

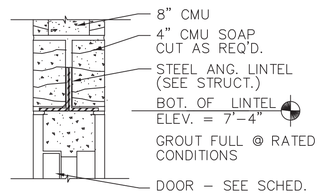

HEAD DETAIL (7 / A2.9)
SCALE: 1 1/2" = 1'-0" B203017A

NOTE: GWB & FURRING ON ONE OR BOTH SIDES SEE WALL PARTITION TYPE

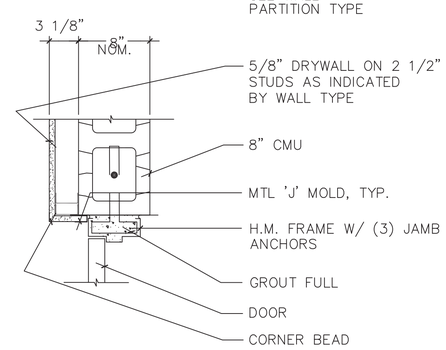

JAMB DETAIL (8 / A2.9)
SCALE: 1 1/2" = 1'-0" C102003C

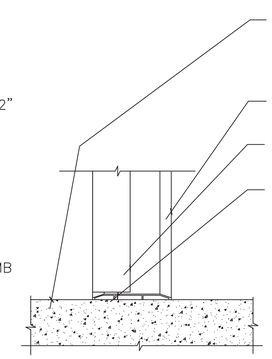

VAULT SILL (9 / A2.9)
SCALE: 1 1/2" = 1'-0" V1000

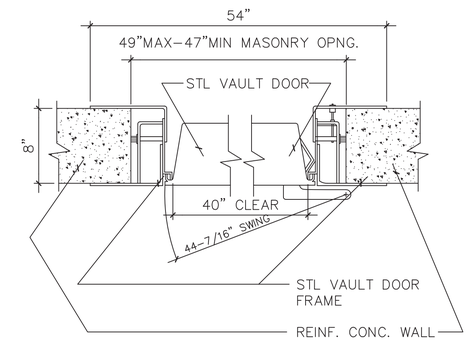

VAULT JAMB DETAIL (10 / A2.9)
SCALE: 1 1/2" = 1'-0" V1002

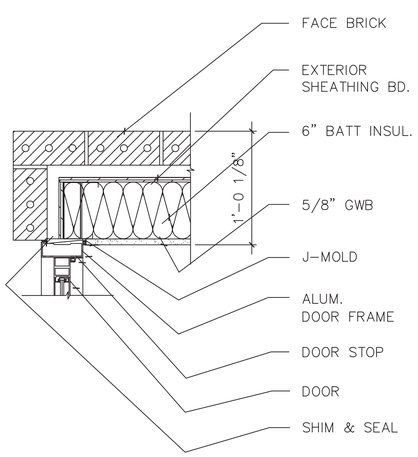

JAMB DETAIL (11 / A2.9)
SCALE: 1 1/2" = 1'-0" B203005B

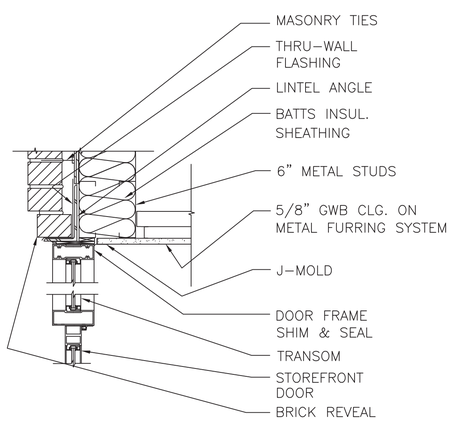

HEAD DETAIL (12 / A2.9)
SCALE: 1 1/2" = 1'-0" B203023I

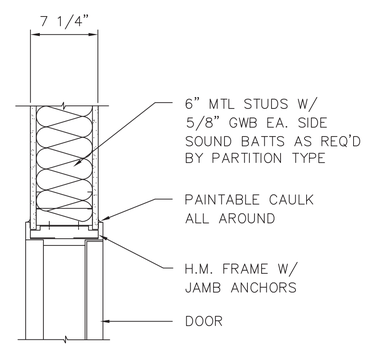

JAMB DETAIL (13 / A2.9)
SCALE: 1 1/2" = 1'-0" C102009D

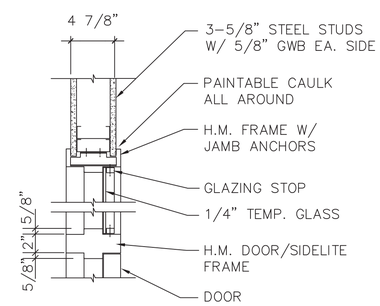

JAMB DETAIL (14 / A2.9)
SCALE: 1 1/2" = 1'-0" C101072C

RECORD DRAWINGS

Revisions Drawn by MAG Date JUNE, 2000

THESE RECORD DRAWINGS HAVE BEEN PREPARED, IN PART, ON THE BASIS OF INFORMATION COMPILED BY OTHERS. THEY ARE NOT INTENDED TO REPRESENT IN DETAIL THE EXACT LOCATION, TYPE OF COMPONENT NOR MANNER OF CONSTRUCTION. THE ENGINEER WILL NOT BE RESPONSIBLE FOR ANY ERRORS OR OMISSIONS WHICH HAVE BEEN INCORPORATED INTO THE RECORD DRAWINGS.

Bar is 1" on original 22x34 sheet

Symbol	Description	Date	Appr.
	RECORD DRAWING	6/00	MAG

126th AIR REFUELING WING

Designed by: CAD/TEAM Date: 7/14/98
Dwn. by: SL/TEAM Design File No.:
Reviewed by: TK Drawing Code:
Submitted by: DLS File Name:
Chief, Plot Date:
Plot Scale: 1 TO 1

126th Air Refueling Wing
Illinois Air National Guard
Scott Air Force Base
Belleville, Illinois

The Benham Group
3688 South Geyer Road
St. Louis, Missouri 63127-1243
(314)821-7017 FAX(314)821-8499
Architects/Engineers/Planners

BASE SUPPLY COMPLEX

DOOR DETAILS

Sheet Reference Number:
A2.9
Sheet 14 of 93

Drawing: O:\126ARW\CAD\BSU\A\BSUA2-9 Saved: 06/17/1998 14:01 By: CS1 DimScale: 0.00 (TM=0) XRefs: BSUTSHT B203026F C102010A C102003C C102009A B203229C B203017A V1001
V1001 B203224B V1000 V1002 B203005B B203023I C102009D C101072C

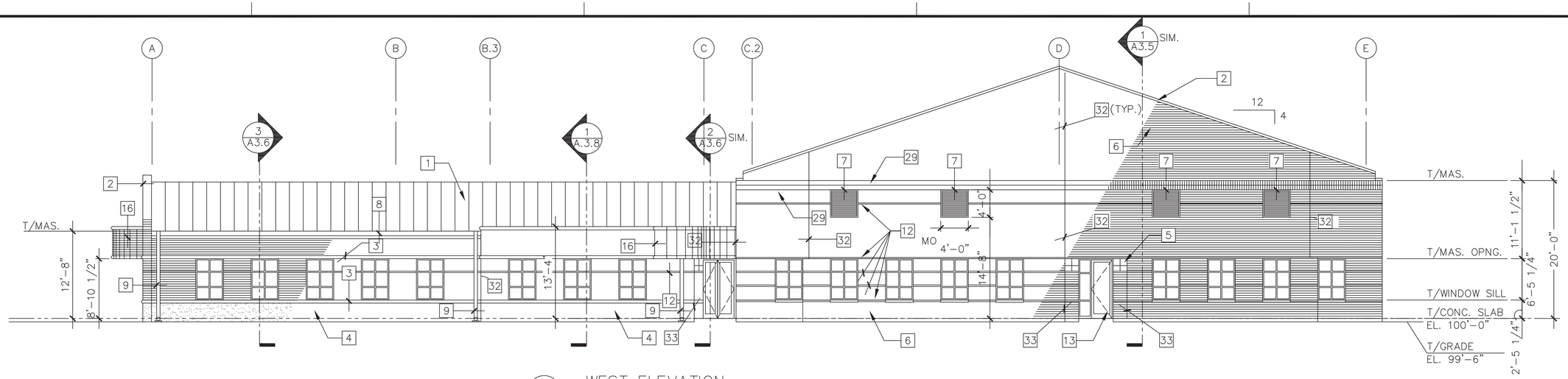

1 A3.2 WEST ELEVATION
SCALE: 1/8" = 1'-0"

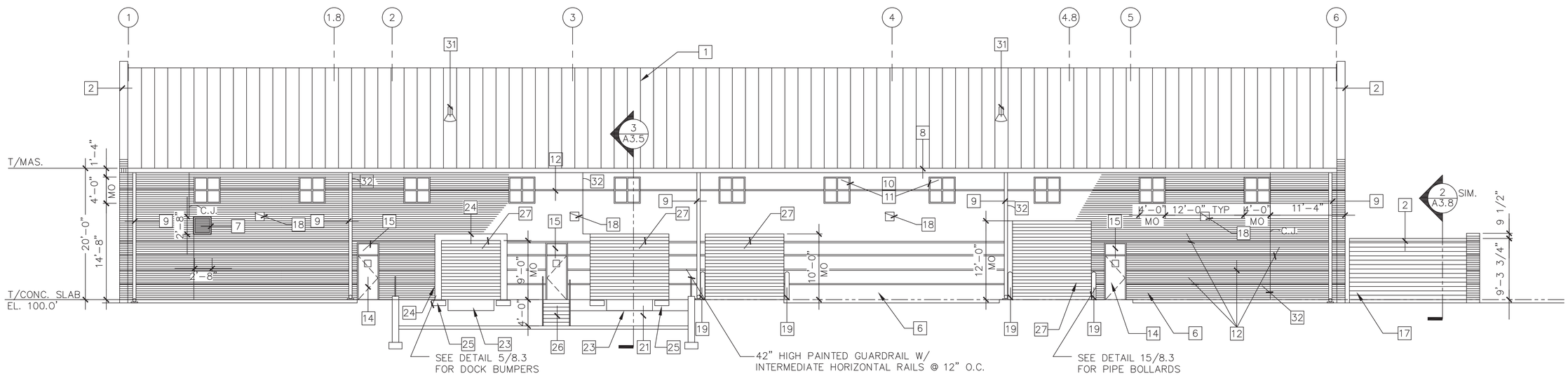

2 A3.2 SOUTH ELEVATION
SCALE: 1/8" = 1'-0"

KEYED NOTES (NOT ALL NOTES WILL APPLY TO EACH ELEVATION)

1. METAL BATTEN ROOF SYSTEM
2. PRECAST CAP
3. PRECAST BANDING
4. PRECAST BASE
5. PRECAST MEDALLIONS
6. FACE BRICK
7. LOUVER
8. GUTTER
9. DOWNSPOUT W/ SPLASH BLOCK
10. INSULATED GLASS
11. ALUM. WINDOW FRAME
12. BRICK REVEAL
13. ALUM. STOREFRONT
14. HOLLOW METAL DOOR & FRAME
15. NOT USED
16. NOT USED
17. SCREEN WALL (PAINT CMU)
18. LIGHT FIXTURE
19. PAINTED STEEL BOLLARDS
20. NOT USED
21. NOT USED
22. NOT USED
23. NOT USED
24. NOT USED
25. NOT USED
26. NOT USED
27. COILING OVERHEAD DOOR
28. NOT USED
29. BRICK SOLDIER COURSE
30. CONTROL JOINT

RECORD DRAWINGS

Revisions Drawn by: MAG Date JUNE, 2000

THESE RECORD DRAWINGS HAVE BEEN PREPARED, IN PART, ON THE BASIS OF INFORMATION COMPILED BY OTHERS. THEY ARE NOT INTENDED TO REPRESENT IN DETAIL THE EXACT LOCATION, TYPE OF COMPONENT NOR MANNER OF CONSTRUCTION. THE ENGINEER WILL NOT BE RESPONSIBLE FOR ANY ERRORS OR OMISSIONS WHICH HAVE BEEN INCORPORATED INTO THE RECORD DRAWINGS.

126th AIR REFUELING WING

Symbol	Description	Date	Appr.
	RECORD DRAWING	6/00	MAG

Designed by: CAD/TEAM Date: 7/14/98
Dwn. by: SL/TEAM Design File No.:
Reviewed by: TK Drawing Code:
Submitted by: DLS File Name:
Chief, Plot Date:
Plot Scale: 1 TO 1

126th Air Refueling Wing
Illinois Air National Guard
Scott Air Force Base
Belleville, Illinois

The Benham Group
3668 South Geyer Road
St. Louis, Missouri 63127-1243
(314)821-7017 FAX(314)821-8499
Architects/Engineers/Planners

BASE SUPPLY COMPLEX

EXTERIOR
BUILDING ELVATIONS

Sheet Reference Number:
A3.2
Sheet 16 of 93

Bar is 1" on original 22x34 sheet

Drawing: O:\126ARW\CAD\BSU\A\BSUA3-2 Saved: 06/23/1998 11:11 By: SL DimScale: 0.00 (TM=0) XRefs: BSUTSHT BSUELE01 GEN\KEYNOTE

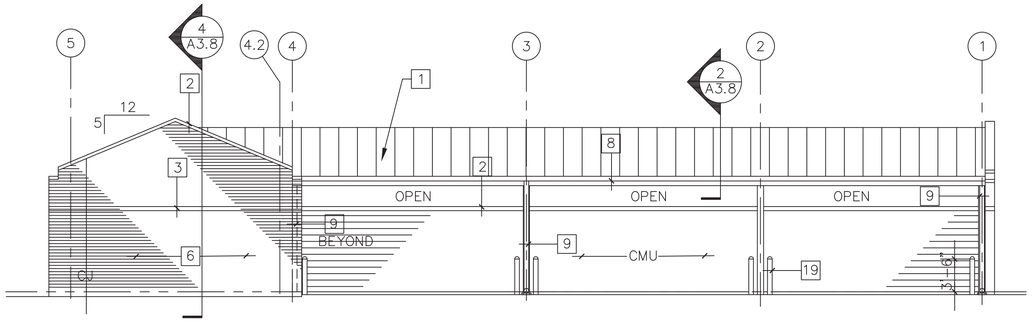

1 A3.4 NORTH ELEVATION
SCALE: 1/8"=1'-0"

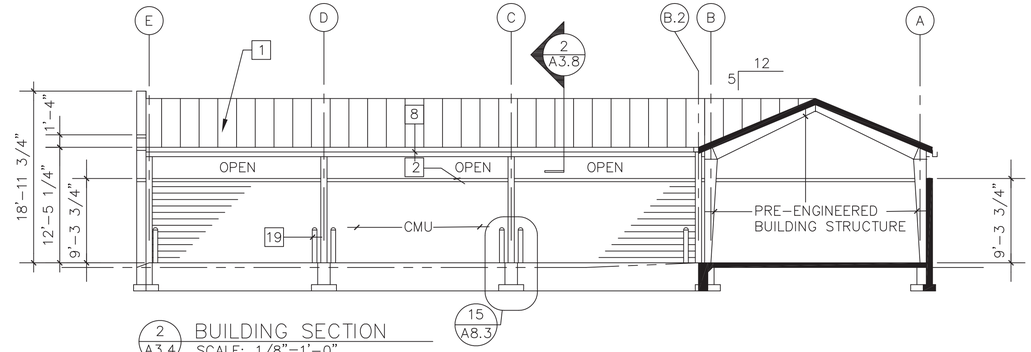

2 A3.4 BUILDING SECTION
SCALE: 1/8"=1'-0"

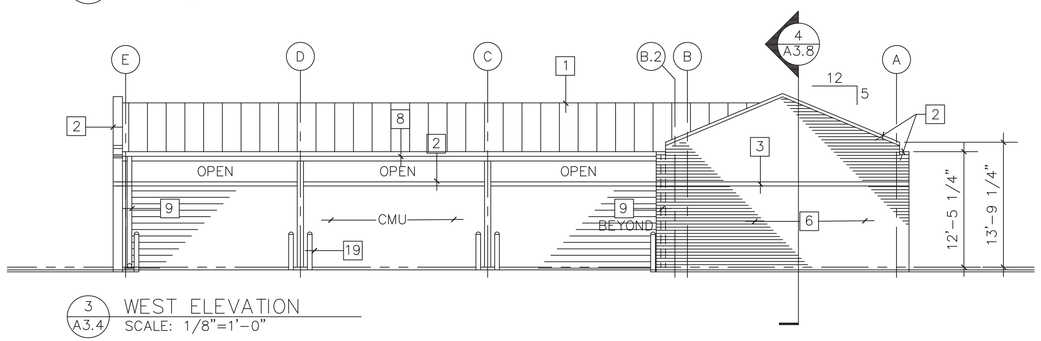

3 A3.4 WEST ELEVATION
SCALE: 1/8"=1'-0"

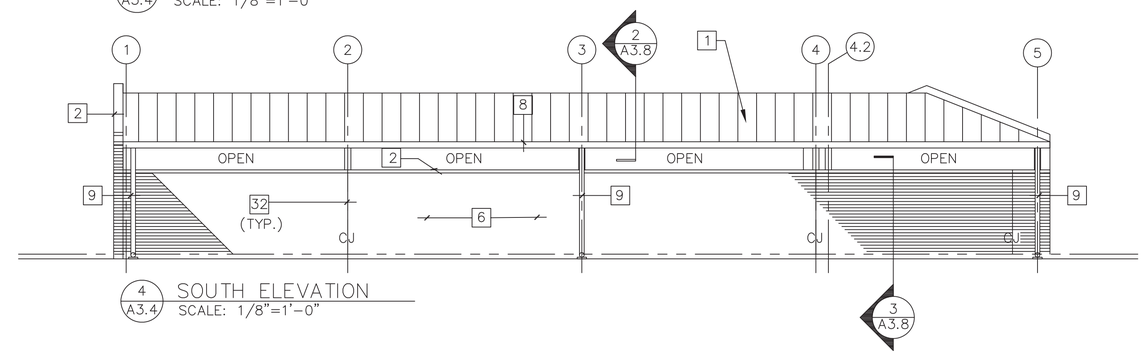

4 A3.4 SOUTH ELEVATION
SCALE: 1/8"=1'-0"

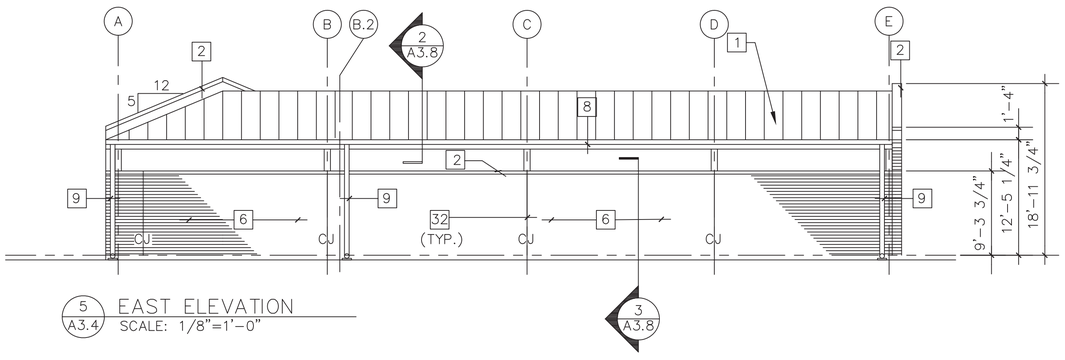

5 A3.4 EAST ELEVATION
SCALE: 1/8"=1'-0"

KEYED NOTES (NOT ALL NOTES WILL APPLY TO EACH ELEVATION)

1. METAL BATTEN ROOF SYSTEM
2. PRECAST CAP
3. PRECAST BANDING
4. PRECAST BASE
5. PRECAST MEDALLIONS
6. FACE BRICK
7. LOUVER
8. GUTTER
9. DOWNSPOUT W/ SPLASH BLOCK
10. INSULATED GLASS
11. ALUM. WINDOW FRAME
12. BRICK REVEAL
13. ALUM. STOREFRONT
14. HOLLOW METAL DOOR & FRAME
15. NOT USED
16. NOT USED
17. SCREEN WALL
18. LIGHT FIXTURE
19. PAINTED STEEL BOLLARDS
20. NOT USED
21. NOT USED
22. NOT USED
23. NOT USED
24. NOT USED
25. NOT USED
26. NOT USED
27. COILING OVERHEAD DOOR
28. NOT USED
29. BRICK SOLDIER COURSE
30. CONTROL JOINT

RECORD DRAWINGS

Revisions Drawn by MAG Date JUNE, 2000

THESE RECORD DRAWINGS HAVE BEEN PREPARED, IN PART, ON THE BASIS OF INFORMATION COMPILED BY OTHERS. THEY ARE NOT INTENDED TO REPRESENT IN DETAIL THE EXACT LOCATION, TYPE OF COMPONENT NOR MANNER OF CONSTRUCTION. THE ENGINEER WILL NOT BE RESPONSIBLE FOR ANY ERRORS OR OMISSIONS WHICH HAVE BEEN INCORPORATED INTO THE RECORD DRAWINGS.

Symbol	Description	Date	Appr
	RECORD DRAWING	6/00	MAG

Designed by: CAD/TEAM Date: 7/14/98
Dwn. by: SL/TEAM Design File No.:
Reviewed by: TK Drawing Code:
Submitted by: DLS File Name:
Chief, Plot Date:
Plot Scale: 1 TO 1

126th Air Refueling Wing
Illinois Air National Guard
Scott Air Force Base
Belleville, Illinois

The Benham Group
3668 South Geyer Road
St. Louis, Missouri 63127-1243
(314)821-7017 FAX(314)821-8499
Architects/Engineers/Planners

BASE SUPPLY COMPLEX

STORAGE SHED
ELEVATIONS &
SECTION

Sheet Reference Number:
A3.4
Sheet 18 of 93

Bar is 1" on original 22x34 sheet

Drawing: O:\126ARW\CAD\BSU\A\BSUA3-4 Saved: 06/17/1998 14:06 By: CS1 DimScale: 96.00 (TM=0) XRefs: BSUTSHT BSSBEL GENVKEYNOTE

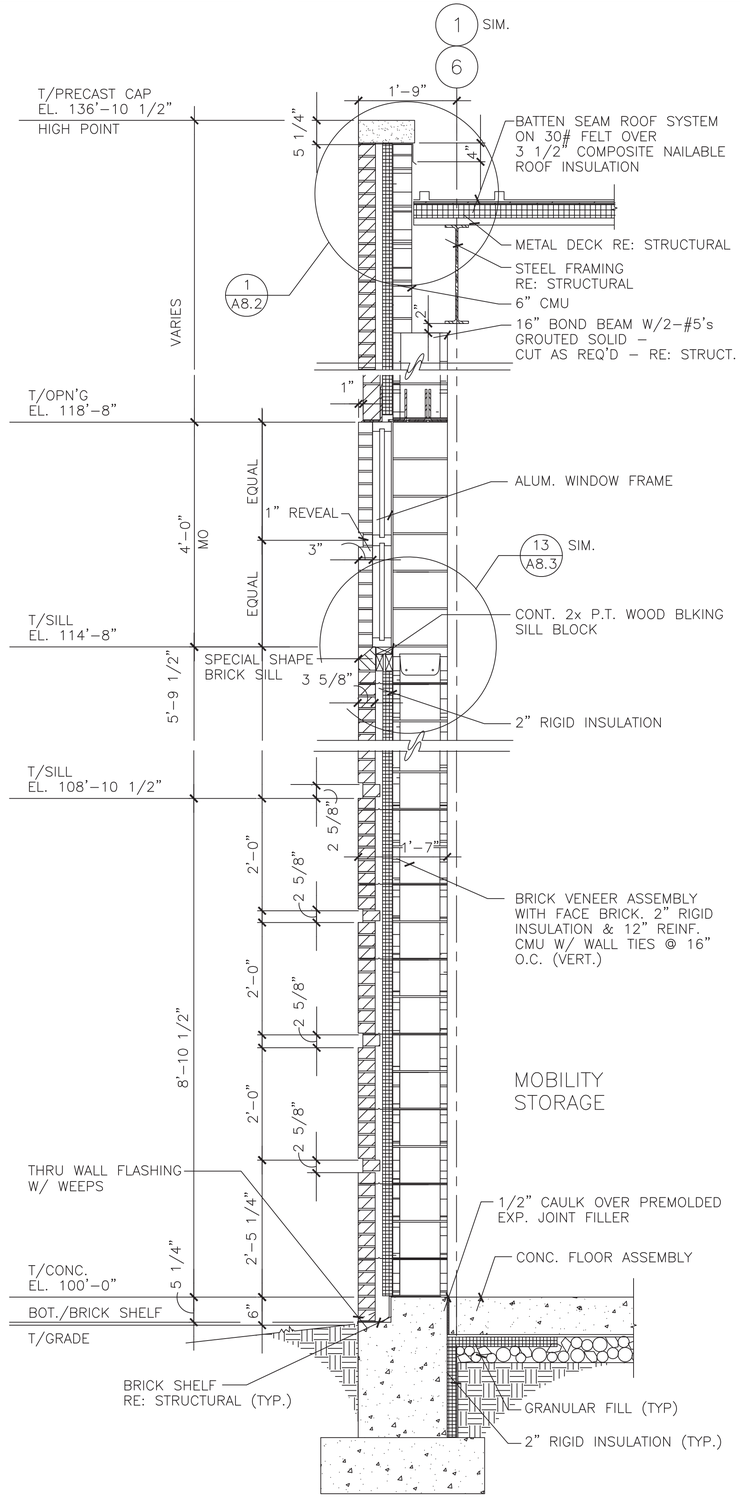

1 A3.5 SECTION
SCALE: 3/4"=1'-0"

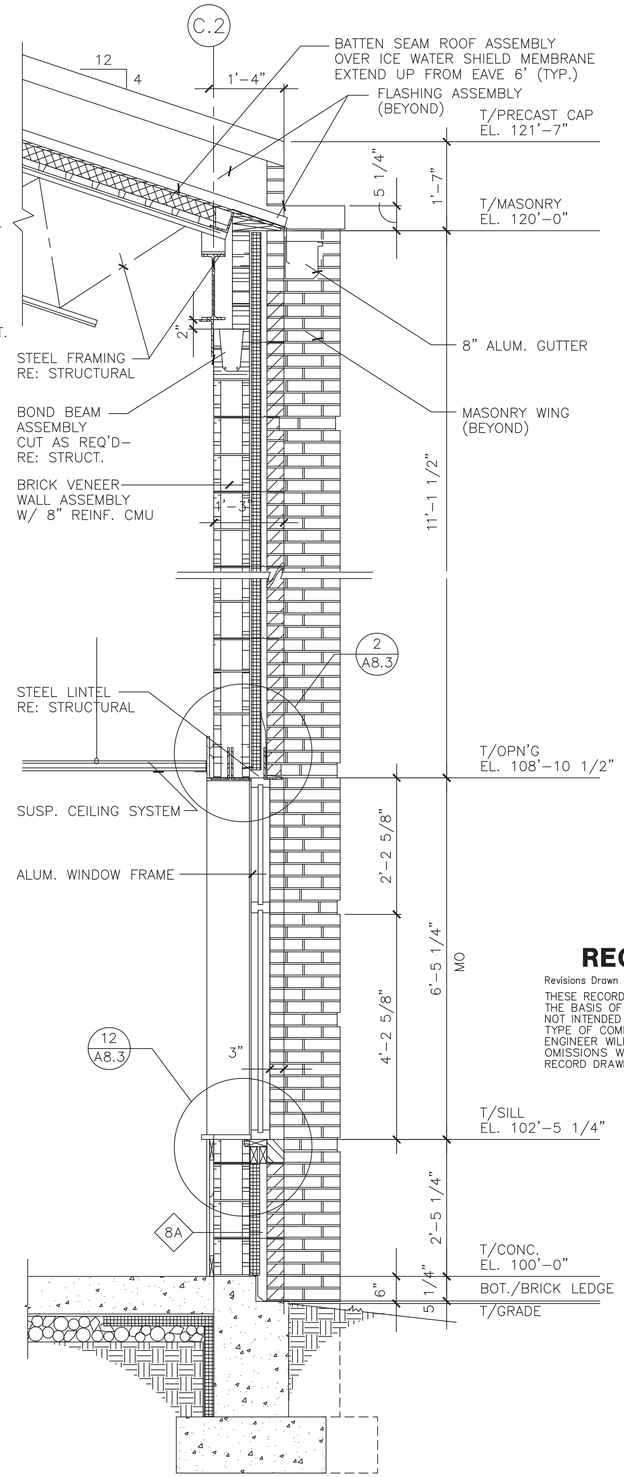

2 A3.5 SECTION
SCALE: 3/4"=1'-0"

RECORD DRAWINGS

Revisions Drawn by MAG Date JUNE, 2000

THESE RECORD DRAWINGS HAVE BEEN PREPARED, IN PART, ON THE BASIS OF INFORMATION COMPILED BY OTHERS. THEY ARE NOT INTENDED TO REPRESENT IN DETAIL THE EXACT LOCATION, TYPE OF COMPONENT NOR MANNER OF CONSTRUCTION. THE ENGINEER WILL NOT BE RESPONSIBLE FOR ANY ERRORS OR OMISSIONS WHICH HAVE BEEN INCORPORATED INTO THE RECORD DRAWINGS.

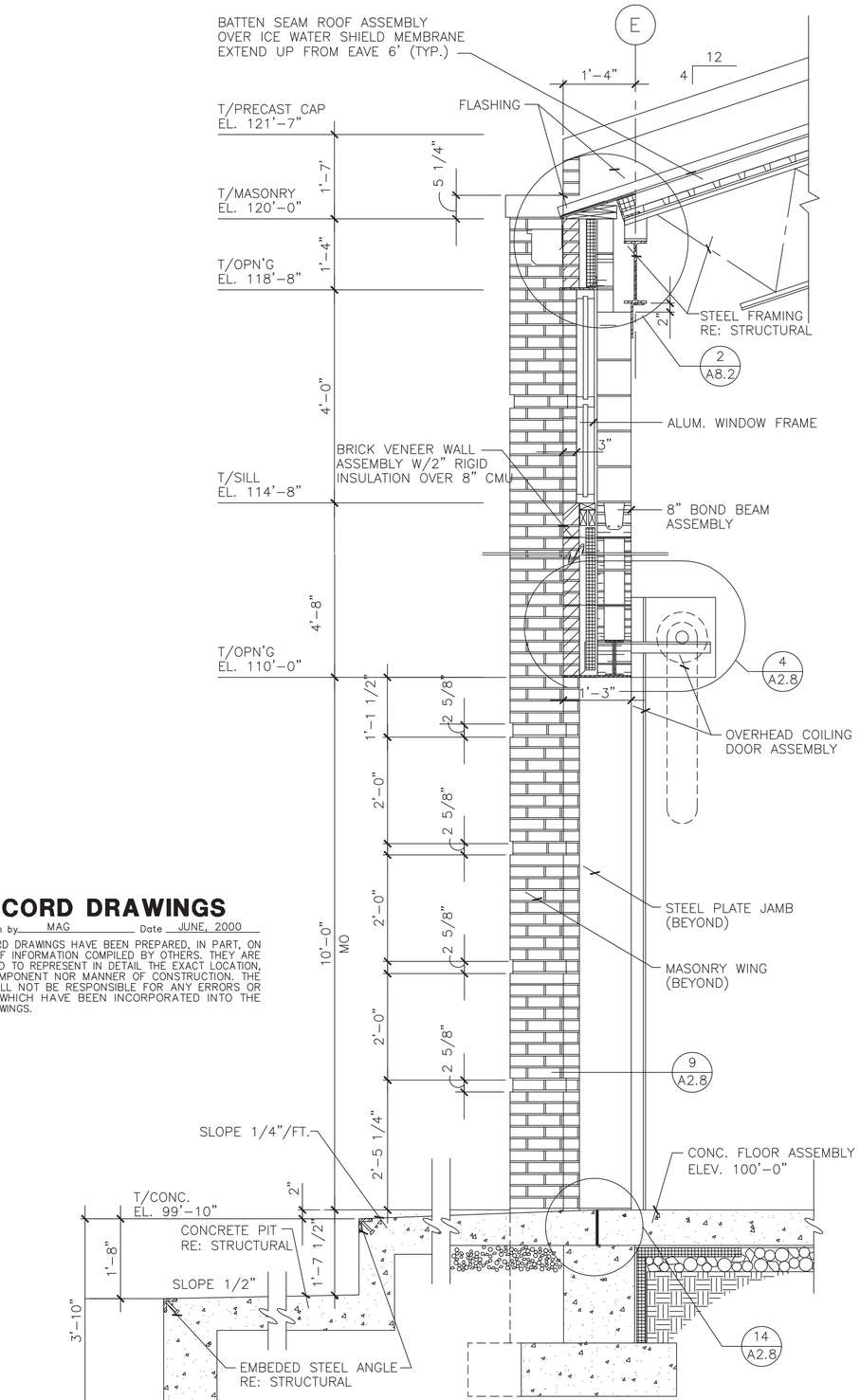

3 A3.5 SECTION
SCALE: 3/4"=1'-0"

Bar is 1" on original 22x34 sheet

126th AIR REFUELING WING

Symbol	RECORD DRAWING Description	Date	Appr.
		6/00	MAG

Designed by: CAD/TEAM Date: 7/14/98
Dwn. by: SL/TEAM Design File No.:
Reviewed by: TK Drawing Code:
Submitted by: D.L.S. File Name: BSUA3_5
Chief, Plot Date:
Plot Scale: 1 TO 1

126th Air Refueling Wing
Illinois Air National Guard
Scott Air Force Base
Belleville, Illinois

The Benham Group
3668 South Geyer Road
St. Louis, Missouri 63127-1243
(314)821-7017 FAX(314)821-8499
Architects/Engineers/Planners

BASE SUPPLY COMPLEX

WALL SECTIONS

Sheet Reference Number:
A3.5

Drawing: O:\126ARW\CAD\BSU\A\BSUA3-5 Saved: 07/01/1998 11:20 By: SL DimScale: 0.00 (TM=0) XRefs: BSUTSHT BSUSECT