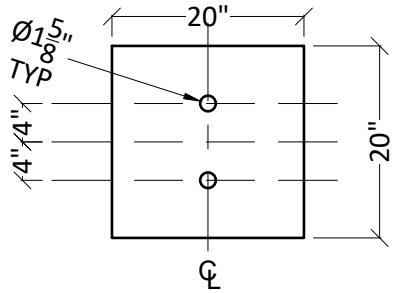

1:20 (1 / S-01) Column Base Plates
PL0.75x20x20 (N=2)

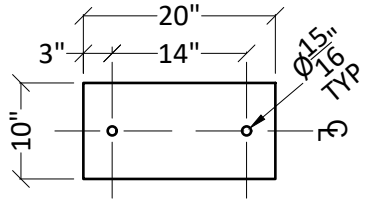

1:20 (4 / S-01) Column Brace Plates
PL0.75x10x20 (N=8)

Materials					
	Item	Quantity	Size (in)	Length (in)	Weight (lb/item)
1	Column Base Plates	2	PL$\frac{3}{4}$x20	20	85
2	Beam Plates	2	PL$\frac{3}{4}$x14.1	44	132
3	Floor Brace Plates	10	PL$\frac{3}{4}$x10	20	43
4	Column Brace Plates	8	PL$\frac{3}{4}$x10	20	43
5	Column Side Plates	2	PL$\frac{3}{4}$x14.7	18	56
6	Stiffeners	4	PL$\frac{3}{4}$x6.5	25.375	35
7	Columns	2	W14x132	240	2640
8	Short Braces	4	HSS4x4x$\frac{1}{4}$	130	132
9	Long Braces	4	HSS4x4x$\frac{1}{4}$	197.875	200
10	Side Brace	2	HSS4x4x$\frac{1}{4}$	120.063	121
11	Beam	1	W27x178	79.75	1183

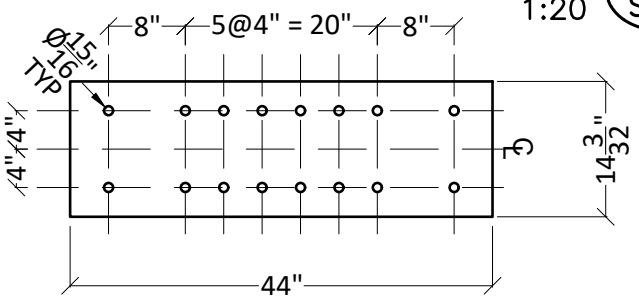

1:20 (2 / S-01) Beam Plates
PL0.75x14.1x27.8 (N=2)

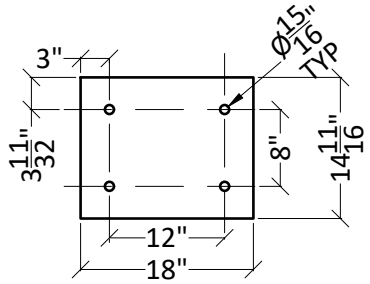

1:20 (5 / S-01) Column Side Plates
PL0.75x14.69x16 (N=2)

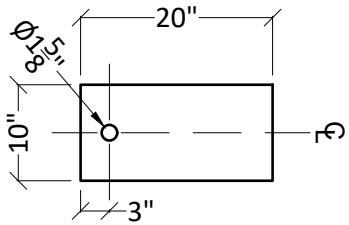

1:20 (3 / S-01) Floor Brace Plates
PL0.75x10x20 (N=10)

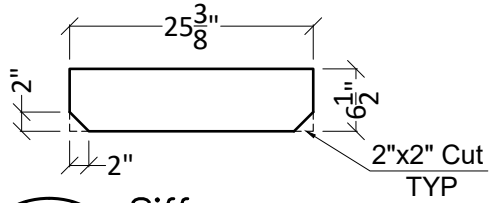

1:20 (6 / S-01) Siffener
PL0.75x6.5x25.375 (N=4)

Notes
1. All steel plates are A572-Gr. 50
2. All Dimensions are from CL
3. All holes are standard, drilled
4. Spacing of holes is C-C
5. Stiffener spacing is C-C of plates
6. Stiffeners shall be welded on both sides the top, bottom, and sides
7. Tolerance is $\frac{1}{32}$"

Department of Civil & Environmental Engr.

United States Military Academy
West Point, NY

Project: CEAC Load Frame			
Title: Materials List & Plates			
Drawn by: Dr. Kevin McMullen		App. by: LTC Chris Graves	
Scale: As Shown	Sheet No: S-01	Date: March 11, 2026	

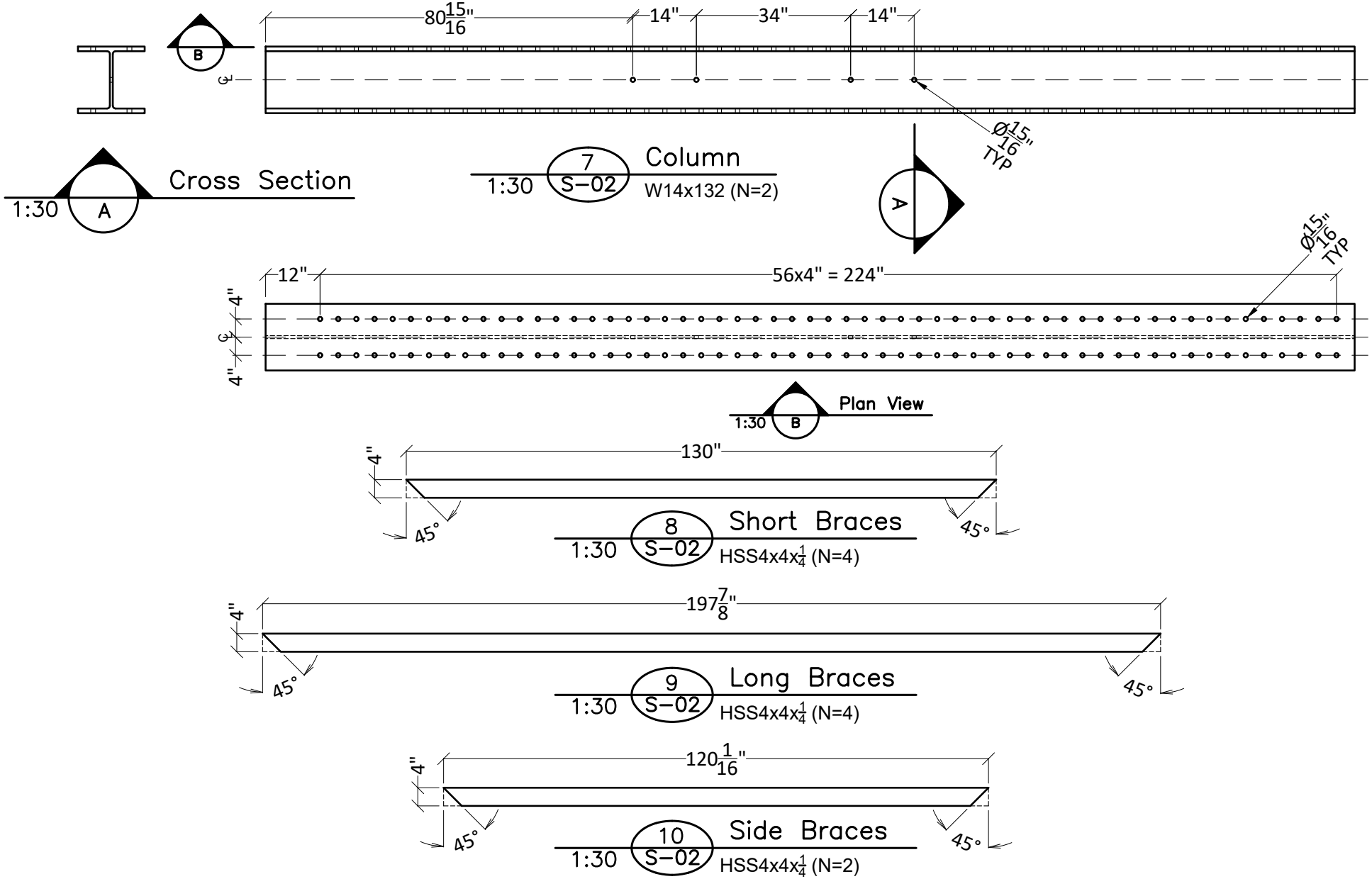

Department of Civil & Environmental Engr.	United States Military Academy West Point, NY	Project: CEAC Load Frame	
		Title: Columns & Braces	
		Drawn by: Dr. Kevin McMullen	App. by: LTC Chris Graves
		Scale: As Shown	Sheet No: S-02 / Date: March 11, 2026

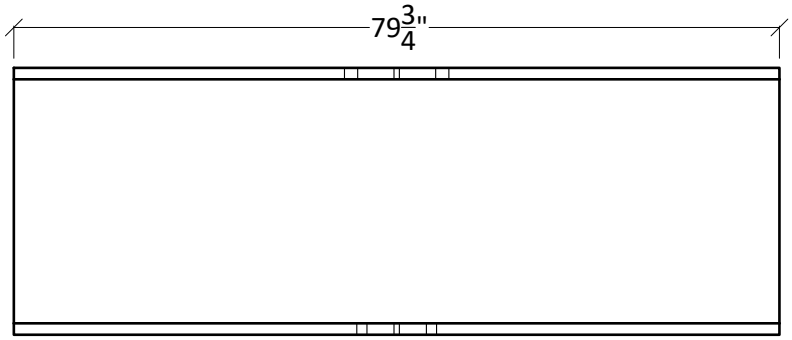

1:20 (11 / S-03) Beam
W27x178 (N=1)

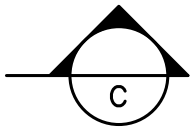

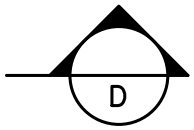

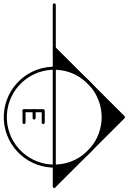

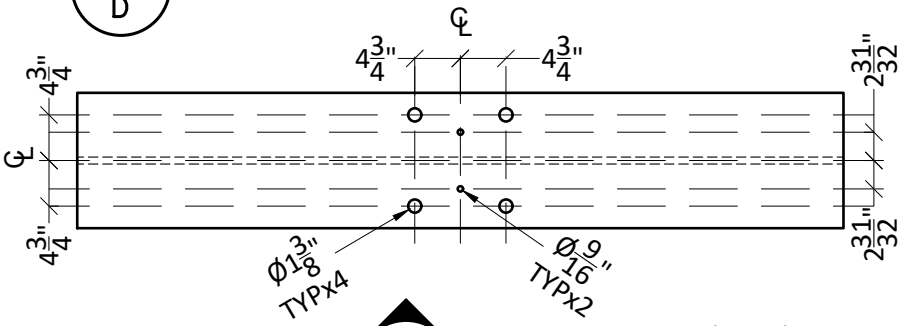

1:20 (C) Plan View (Top)

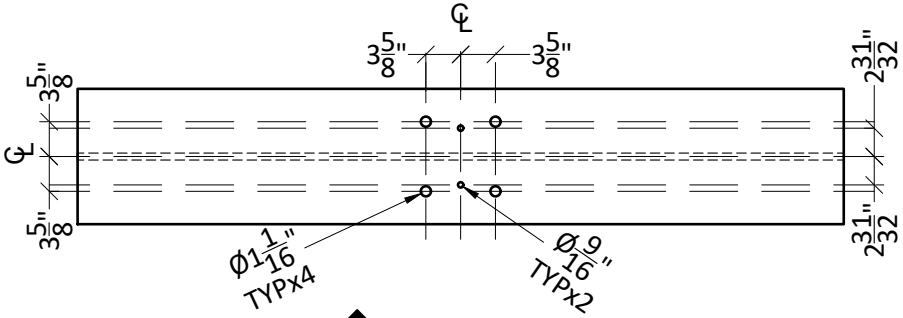

1:20 (D) Plan View (Bottom)

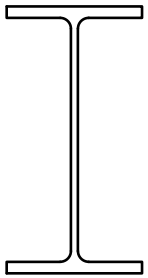

1:20 (E) Cross-Section

Department of Civil & Environmental Engr.	United States Military Academy West Point, NY	Project: CEAC Load Frame	
		Title: Beam	
		Drawn by: Dr. Kevin McMullen	App. by: LTC Chris Graves
		Scale: As Shown	Sheet No: S-03 / Date: March 11, 2026

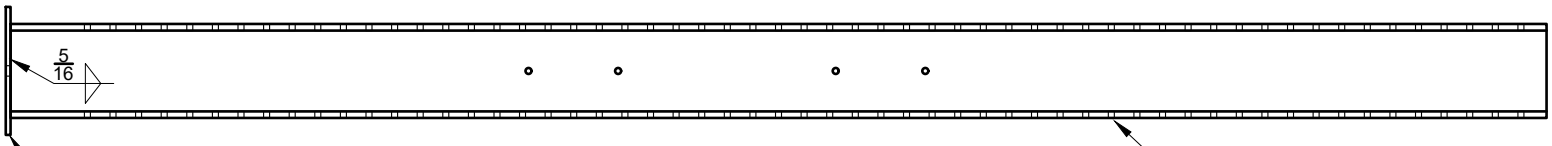

12 S-04 Column Welding
1:30

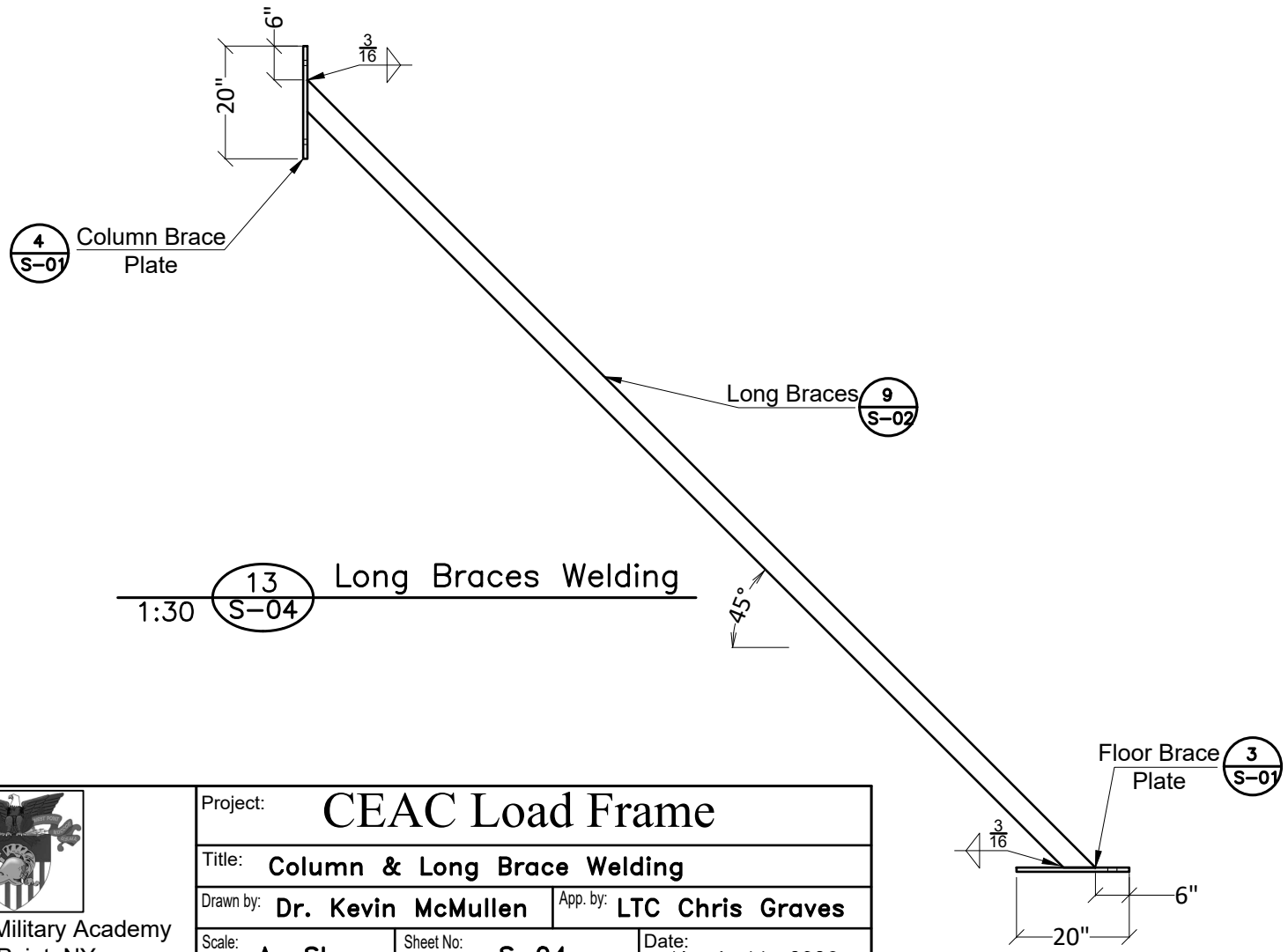

13 S-04 Long Braces Welding
1:30

Department of Civil & Environmental Engr.	United States Military Academy West Point, NY	Project: CEAC Load Frame	
		Title: Column & Long Brace Welding	
		Drawn by: Dr. Kevin McMullen	App. by: LTC Chris Graves
		Scale: As Shown	Sheet No: S-04 / Date: March 11, 2026

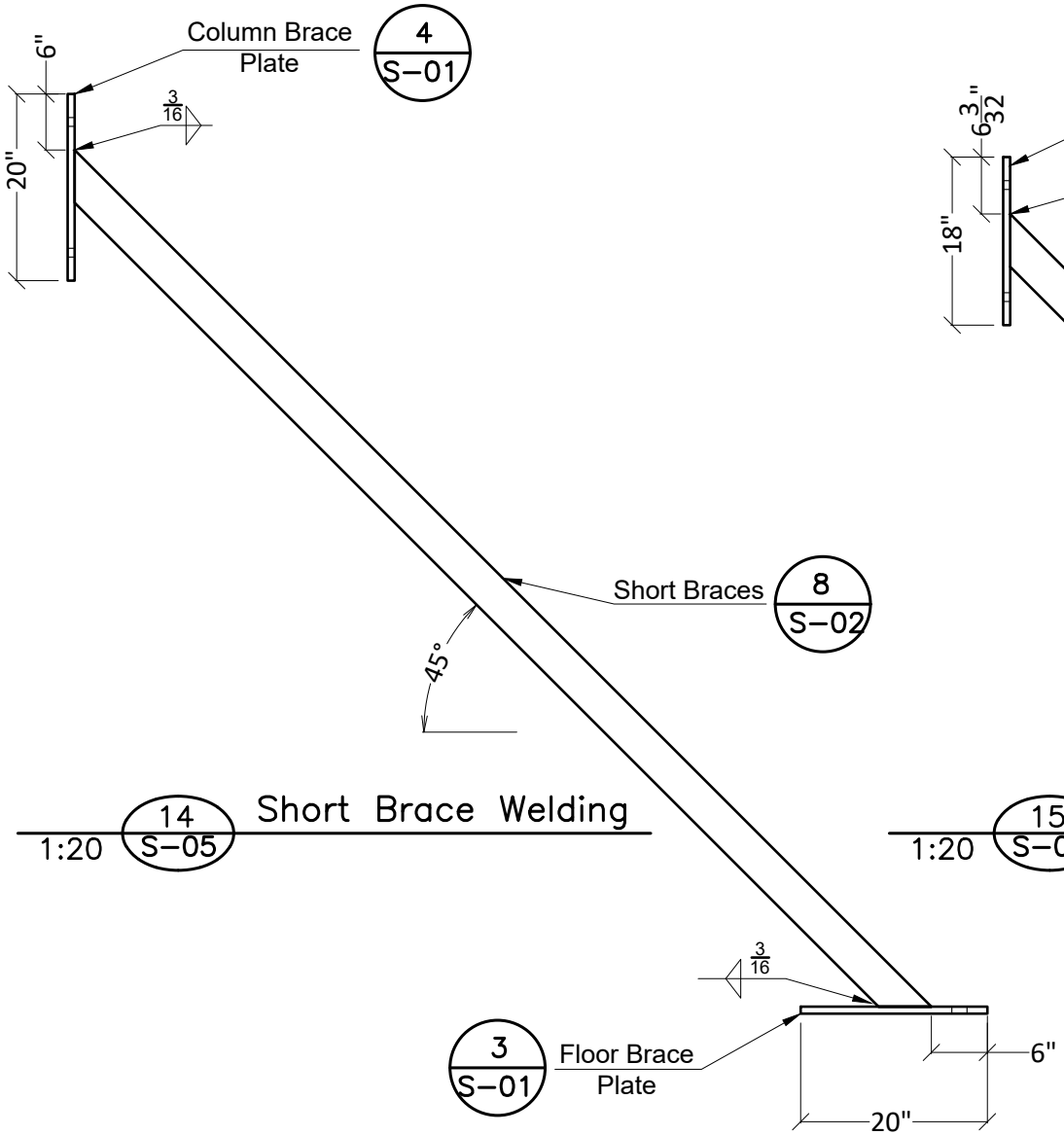

14 S-05 Short Brace Welding
1:20

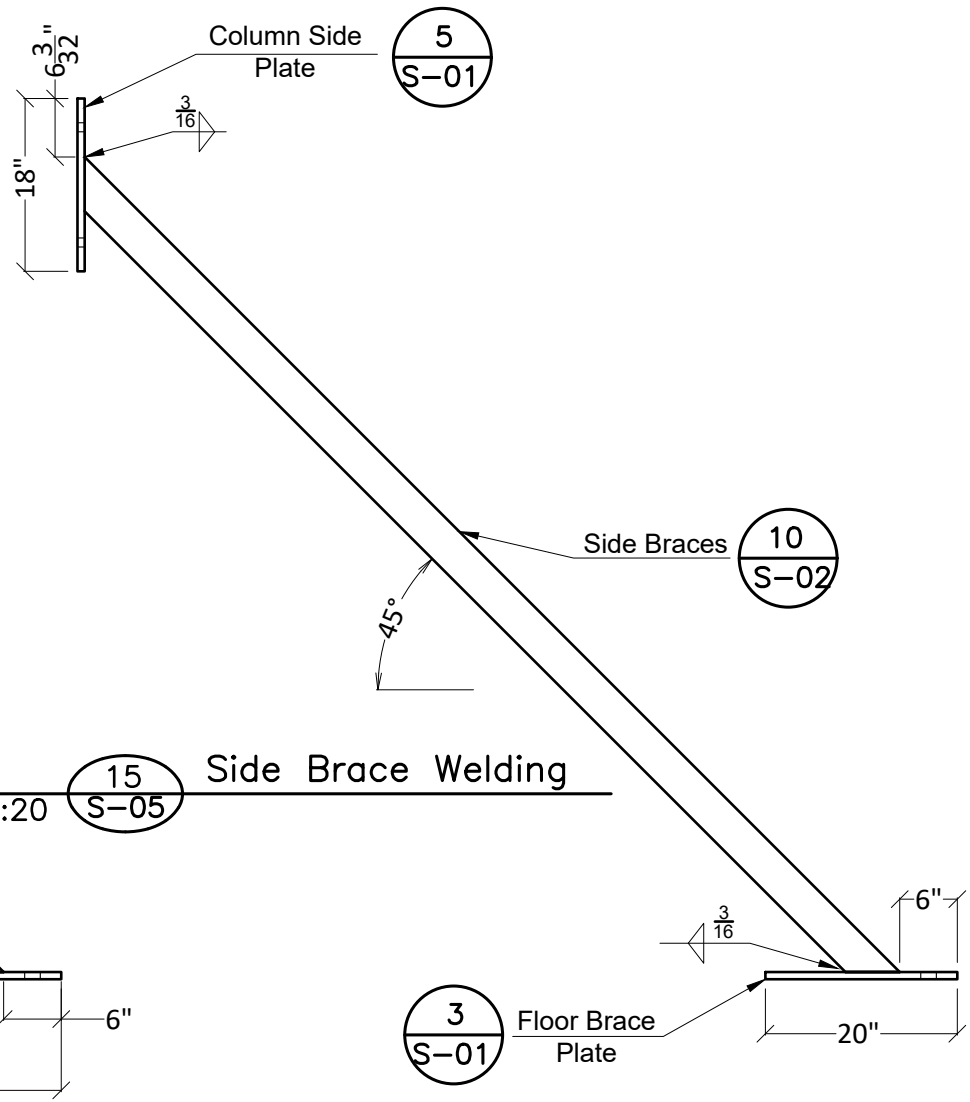

15 S-05 Side Brace Welding
1:20

Department of Civil & Environmental Engr.	United States Military Academy West Point, NY	Project: CEAC Load Frame	
		Title: Short Brace Welding	
		Drawn by: Dr. Kevin McMullen	App. by: LTC Chris Graves
		Scale: As Shown	Sheet No: S-05 / Date: March 11, 2026

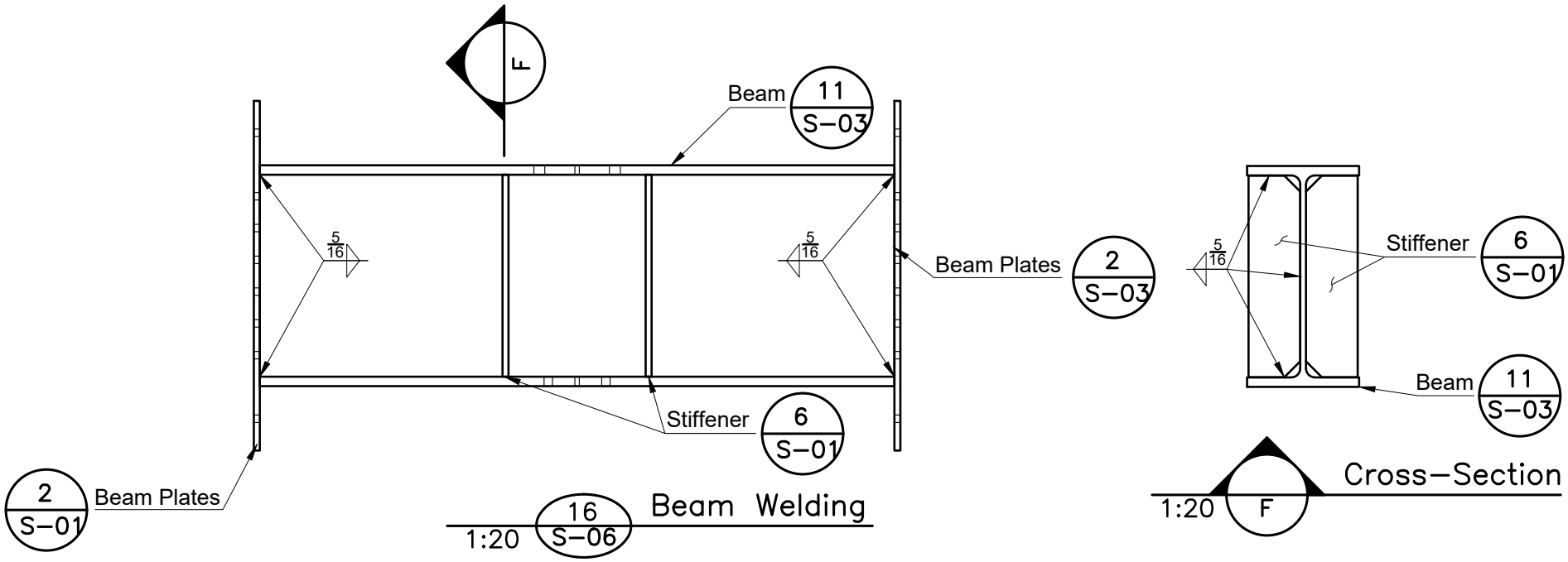

Department of Civil & Environmental Engr.	United States Military Academy West Point, NY	Project: CEAC Load Frame
		Title: Beam Welding
		Drawn by: Dr. Kevin McMullen — App. by: LTC Chris Graves
		Scale: As Shown — Sheet No: S-06 — Date: March 11, 2026

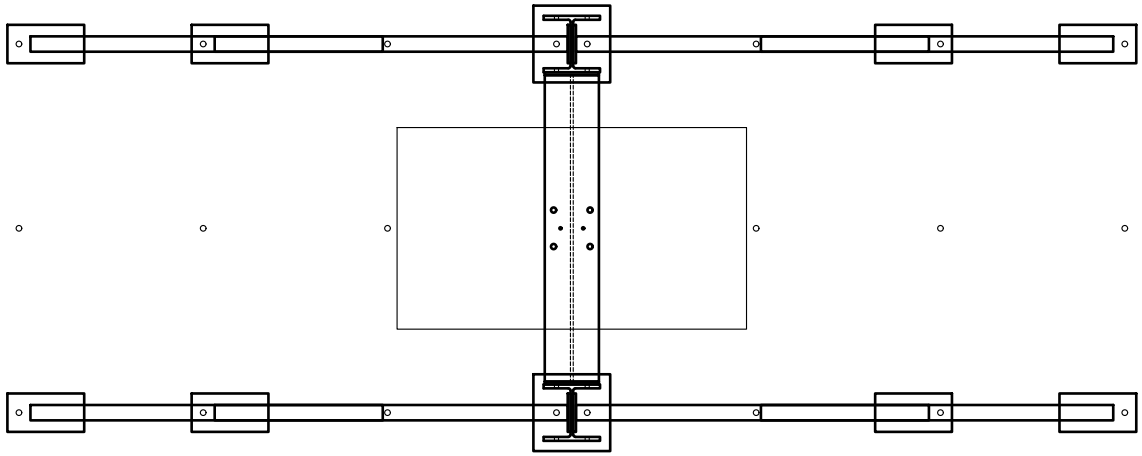

Department of Civil & Environmental Engr.	United States Military Academy West Point, NY	Project: CEAC Load Frame		
		Title: Plan View		
		Drawn by: Dr. Kevin McMullen	App. by: LTC Chris Graves	
		Scale: 1:50	Sheet No: A-01	Date: March 11, 2026

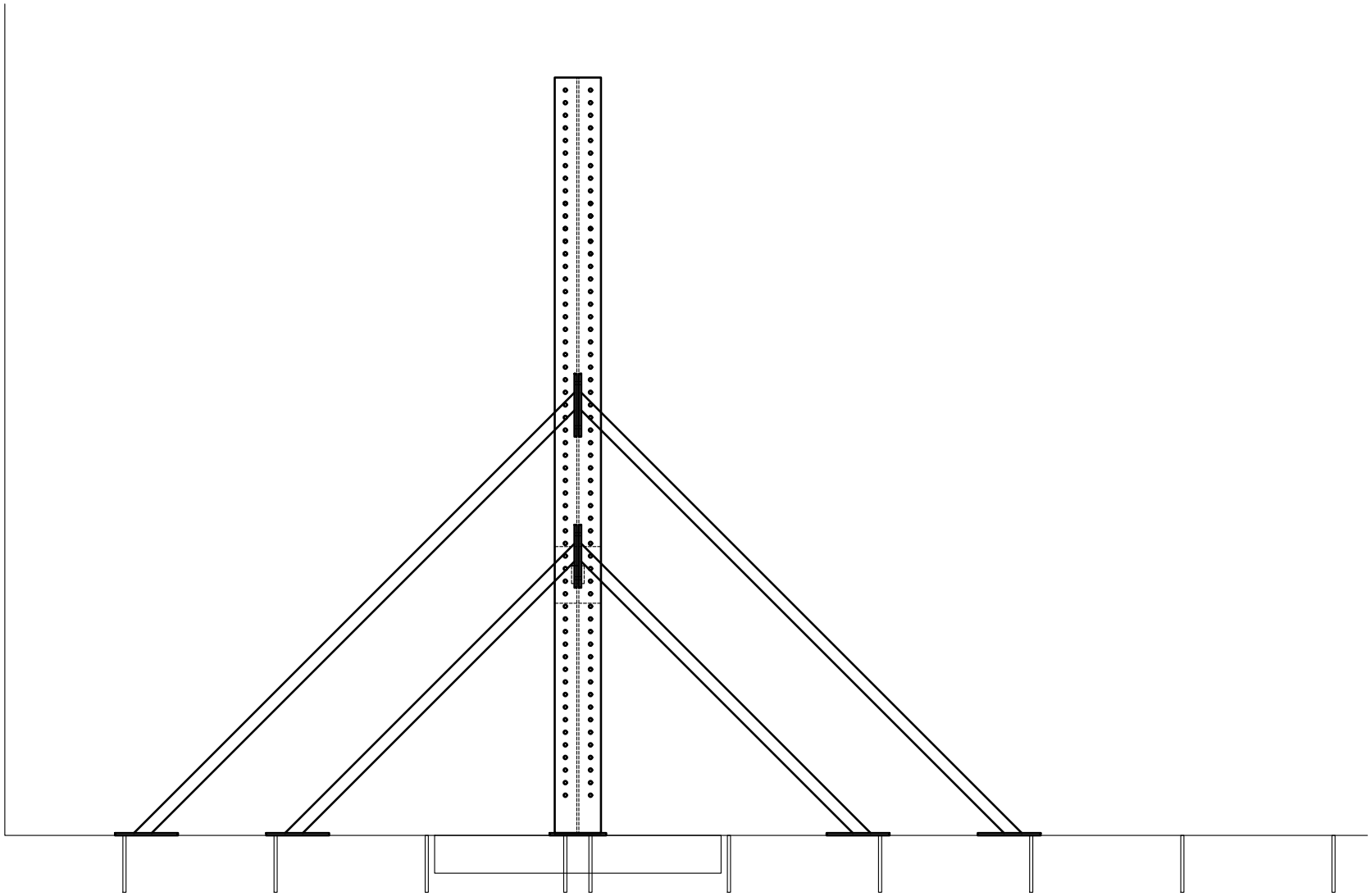

Department of Civil & Environmental Engr.	United States Military Academy West Point, NY	Project: CEAC Load Frame		
		Title: Elevation		
		Drawn by: Dr. Kevin McMullen	App. by: LTC Chris Graves	
		Scale: 1:50	Sheet No: A-02	Date: March 11, 2026

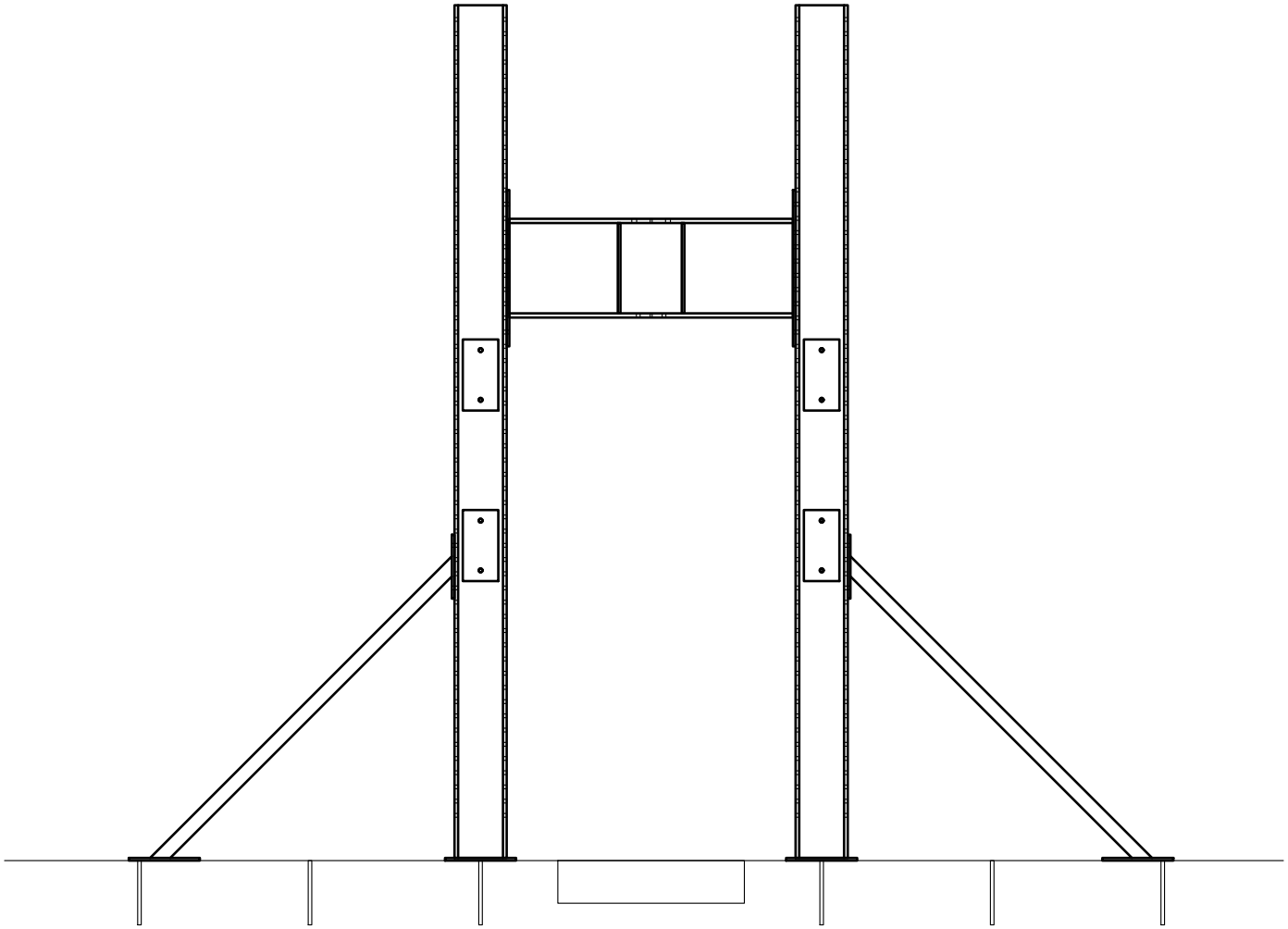

Department of Civil & Environmental Engr.	United States Military Academy West Point, NY	Project: CEAC Load Frame		
		Title: Cross Section		
		Drawn by: Dr. Kevin McMullen	App. by: LTC Chris Graves	
		Scale: 1:50	Sheet No: A-03	Date: March 11, 2026