United States Department of Agriculture
Forest Service

UTAH
BEAVER COUNTY
R4 INTERMOUNTAIN REGION
FISHLAKE NATIONAL FOREST
BEAVER RANGER DISTRICT

# GAOA KENT'S LAKE CAMPGROUND RECONSTRUCTION PROJECT

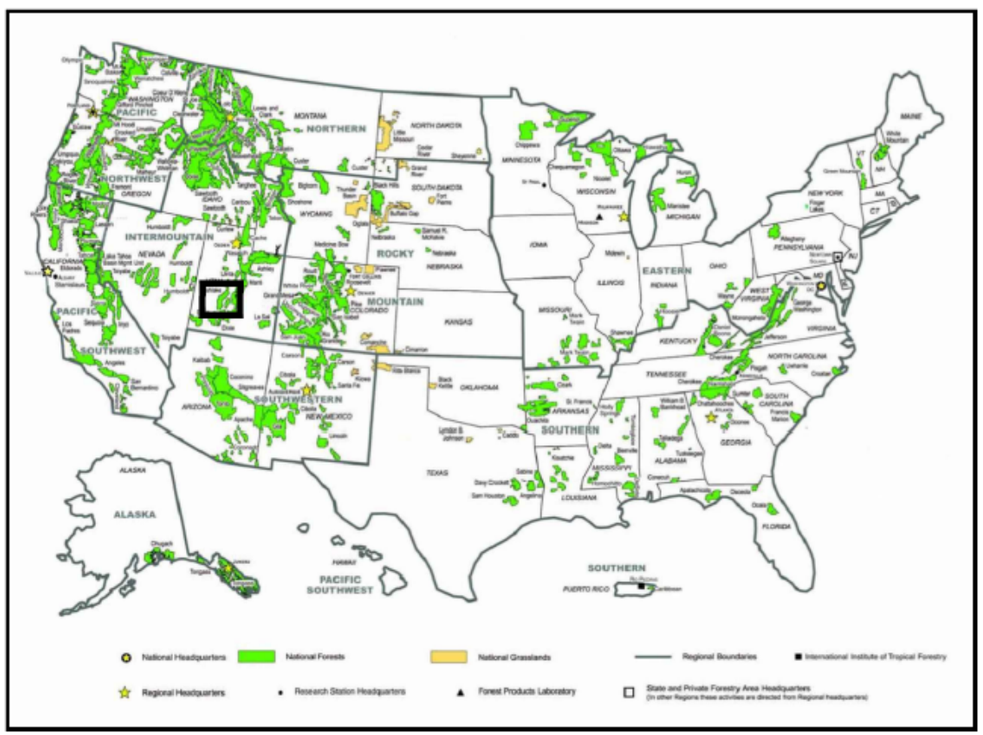


FOREST LOCATION

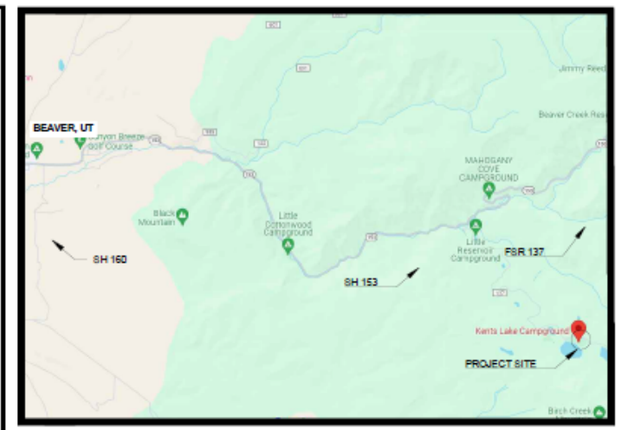


VICINITY MAP

## PROJECT LOCATION

THE PROJECT IS LOCATED ON THE BEAVER RANGER DISTRICT OF THE FISHLAKE NATIONAL FOREST, BEAVER COUNTY, UTAH. GPS COORDINATES: 38.237153° N, -112.460103° W. IT IS LOCATED APPROXIMATELY 15 MILES SOUTHEAST OF BEAVER, UTAH. FROM INTERSTATE 15, THE PROJECT MAY BE ACCESSED VIA STATE HIGHWAYS 160 THEN 153. FROM THERE, FOLLOW FOREST SERVICE ROAD (FSR) 30137 TO FSR 30572. THE CAMPGROUND IS LOCATED ON THE SOUTH SIDE OF FSR 30572.

GOVERNMENT SOURCES AND PITS:

- ALL BORROW, CRUSHED AGGREGATE, AND BARRIER/ROCKERY ROCK WILL BE COMMERCIAL SOURCE.

**RECOMMENDED:**

STEVEN RODRIGUEZ — Digitally signed by STEVEN RODRIGUEZ Date: 2026.05.06 10:28:27 -06'00'
FOREST ENGINEER — DATE

MICHAEL ELSON — Digitally signed by MICHAEL ELSON Date: 2026.05.07 09:06:42 -06'00'
FOREST SUPERVISOR — DATE

JEREMY KEYS — Digitally signed by JEREMY KEYS Date: 2026.05.07 08:55:57 -06'00'
DISTRICT RANGER — DATE

**APPROVED:**

KEVIN BOURNE — Digitally signed by KEVIN BOURNE Date: 2026.05.07 15:58:53 -06'00'
REGIONAL ENGINEER — DATE

# INDEX OF SHEETS

| INDEX OF SHEETS | | |
|---|---|---|
| **SHEET** | **DWG** | **SHEET TITLE** |
| 1 | G1 | COVER SHEET WITH VICINITY MAP |
| 2 | G2 | INDEX OF SHEETS |
| 3 | G3 | PROJECT DESCRIPTION |
| 4 | DE1 | DEMOLITION PLAN - OVERVIEW |
| 5 | DE2 | DEMOLITION PLAN - WEST |
| 6 | DE3 | DEMOLITION PLAN - EAST |
| 7 | S1 | SITE PLAN - OVERVIEW |
| 8 | S2 | SITE PLAN - WEST |
| 9 | S3 | SITE PLAN - EAST |
| 10 | D1 | FAMILY UNITS AND AGGREGATE PAD LAYOUT DETAILS |
| 11 | D2 | 8-FOOT EXPANDED METAL PICNIC TABLE (AGGREGATE PAD) |
| 12 | D3 | UTILITY TABLE (EMBEDDED POST) AND PATH DETAILS |
| 13 | D4 | METAL FIRE RING DETAILS (AGGREGATE PAD FAMILY UNIT) |
| 14 | D5 | UNIT MARKER DETAILS |
| 15 | D6 | TENT PAD DETAILS |
| 16 | D7 | BARRIER ROCK AND CURB STOP INSTALLATION DETAILS |
| 17 | D8 | ROCKERY RETAINING WALL DETAILS |
| 18 | D9 | FAMILY UNITS AND CONCRETE PAD LAYOUT DETAILS |
| 19 | D10 | DAY USE PICNIC AREA - 4 PICNIC TABLE LAYOUT (W/ SHADE STRUCTURE) |
| 20 | D11 | 8-FOOT EXPANDED METAL PICNIC TABLE (CONCRETE PAD) |
| 21 | D12 | UTILITY TABLE DETAILS (SURFACE MOUNT) |
| 22 | D13 | METAL FIRE RING DETAILS (CONCRETE PAD) |
| 23 | D14 | HOST UNIT UTILITY LAYOUT |
| 24 | D15 | SIGN LIST AND INSTALLATION DETAILS |
| 25 | D16 | MINOR SITE IDENTIFICATION SIGN DETAILS (RSE) |
| 26 | D17 | POST & POLE FENCE AND STOCK GATE - REINSTALLATION DETAIL |

| INDEX OF SHEETS | | |
|---|---|---|
| **SHEET** | **DWG** | **SHEET TITLE** |
| 27 | R1 | ROAD OVERVIEW |
| 28 | R2 | CAMPGROUND LOOP ROAD PROFILE - 0+00 TO 4+50 |
| 29 | R3 | CAMPGROUND LOOP ROAD PROFILE - 4+50 TO 9+50 |
| 30 | R4 | CAMPGROUND LOOP ROAD PROFILE - 9+50 TO 14+50 |
| 31 | R5 | CAMPGROUND LOOP ROAD PROFILE - 14+50 TO 19+50 |
| 32 | R6 | CAMPGROUND LOOP ROAD PROFILE - 19+50 TO 24+50 |
| 33 | R7 | CAMPGROUND LOOP ROAD PROFILE - 24+50 TO 29+50 |
| 34 | R8 | CAMPGROUND LOOP ROAD PROFILE - 29+50 TO 34+41.78 (34+42) |
| 35 | R9 | DAY USE AREA ROAD PROFILE - 0+00 TO 3+57 (24' SECTION), 0+00 TO 1+50 (14' SECTION) |
| 36 | R10 | DAY USE AREA ROAD PROFILE - 1+50 TO 6+64.6 (6+65, 14' SECTION) |
| 37 | R11 | ROAD OVERVIEW - DRAINAGE LAYOUT |
| 38 | R12 | GATE FABRICATION DETAILS |
| 39 | R13 | GATE FABRICATION DETAILS (CONT'D) |
| 40 | R14 | GATE INSTALLATION DETAILS |
| 41 | R15 | TYPICAL SPUR SECTION AND DETAILS |
| 42 | R16 | TYPICAL SPUR SECTION AND DETAILS (CONT'D) |
| 43 | R17 | TYPICAL ROAD AND PARKING CROSS SECTIONS |
| 44 | R18 | CULVERT DETAILS |
| 45 | R19 | ACCESSIBLE AND TYPICAL PARKING STALL LAYOUT DETAILS |
| 46 | W1 | WATER SYSTEM OVERVIEW |
| 47 | W2 | HYDRANT DETAIL |
| 48 | W3 | VALVE, VALVE BOX AND TRENCH DETAIL |
| 49 | W4 | TRAILER SEWER SERVICE HOOKUP, SEWER CLEANOUT AND TANK MANWAY DETAILS |

United States Department of Agriculture
Forest Service

R4
INTERMOUNTAIN REGION

STAMPS, LOGOS, AND SEALS

| NO. | REVISION / ISSUE | DATE |
|---|---|---|
| 4 | | |
| 3 | | |
| 2 | | |
| 1 | | |

PROJECT NAME

**GAOA KENTS LAKE CAMPGROUND RECONSTRUCTION PROJECT**

**FISHLAKE NATIONAL FOREST**

**BEAVER RANGER DISTRICT**

DRAWING TITLE

**INDEX OF SHEETS**

| | |
|---|---|
| DATE 02/20/2024 | ARCHIVE NO. |
| DESIGNER JR/RB | DRAWING SHEET NO. G2 |
| DRAWN JR/RB | |
| CHECKED R. ANDERSON | |
| PROJECT NO. | SHEET 2 OF 49 |

2/4/26 09:11 NATHANROBINSON C:\USERS\NATHANROBINSON\BOXENGDESIGN\FISHLAKE\KENTS.LAKE.CAMPGROUND.2023\DWG\02-03_G2-3_KENTS.LAKE.SHEET.INDEX.VICINITYMAP.DWG;

# PROJECT DESCRIPTION/SCHEDULE OF ITEMS

## BASE BID ITEMS

| | | | | |
|---|---|---|---|---|
| 010250-1 | Construction Staking | LSQ | LS | 1 |
| 011900-1 | Mobilization | LSQ | LS | 1 |
| 024102 | Removal and Disposal of Existing Structures | LSQ | LS | 1 |
| 033540-1 | Concrete Sidewalk - 6-Inch thick | AQ | CY | 18 |
| 033540-2 | Concrete Stairs | AQ | EA | 32 |
| 033540-3 | Concrete Pad (4' x 4') in Host Site | AQ | CY | 1 |
| 055210 | Pipe and Guard Rail Railings | AQ | LF | 500 |
| 101400 | Signs - Regulatory & Directional (Aluminum) | AQ | EA | 15 |
| 101415 | Minor Site I.D. Sign (HDPE) | AQ | EA | 1 |
| 129400-1 | Family Unit - Single (4" Aggregate Surface Pad, Picnic Table, Utility Table, & Fire Ring ) | AQ | EA | 23 |
| 129400-2 | Family Unit - Single (4" Concrete Surface Pad, Picnic Table, Utility Table & Fire Ring) | AQ | EA | 6 |
| 129400-3 | Family Unit - Double (4" Aggregate Surface Pad, Picnic Table, Utility Table & Fire Ring) | AQ | EA | 2 |
| 129400-4 | Unit Markers (Reinstall existing) | AQ | EA | 30 |
| 221102 | Curb Valves and Boxes (Relocate designated valves within proposed roadway) | LSQ | LS | 1 |
| 221105-1 | Water Hydrants (New at non-Host Sites) | AQ | EA | 4 |
| 221105-2 | Water Hydrants (New at Host Site) | AQ | EA | 1 |
| 221310-1 | 1,000 Gallon Concrete Septic Holding Tank | AQ | EA | 1 |
| 221310-2 | Sewerline, Gravity 4" PVC, SDR 35 (including trench) | AQ | LF | 30 |
| 311000-1 | Clearing and Grubbing (*Group A, B, and C Sites, See Below) | LSQ | LS | 1 |
| 311000-2 | Clearing and Grubbing (*Group D, See Below) | LSQ | LS | 1 |
| 312010-1 | Select Borrow (Commerical Grade, *Group A Sites, See below) | AQ | CY | 200 |
| 312010-2 | Select Borrow (Commerical Grade, *Group B Sites, See Below) | AQ | CY | 150 |
| 312010-3 | Select Borrow (Commerical Grade, *Group C Sites, See Below) | AQ | CY | 300 |
| 312010-4 | Select Borrow (Commerical Grade, *Group D Sites, See Below) | AQ | CY | 500 |
| 312100-1 | Project Site Preparation and Grading (*Group A, B, and D Sites, See Below) | LSQ | LS | 1 |
| 312100-2 | Project Site Preparation and Grading (*Group C Sites, See Below) | LSQ | LS | 1 |
| 312225-1 | Excavation and Embankment (Roadside Ditches, Ditch Line Armoring) | AQ | LF | 4,500 |
| 321204-1 | Crushed Aggregate Surfacing - Grading G (*Group A and B Sites, See below) | DQ | CY | 1,000 |
| 321204-2 | Crushed Aggregate Surfacing - Grading G (Commercial Grade, *Group C Sites, See Below) | DQ | CY | 250 |
| 321204-3 | Crushed Aggregate Surfacing - Grading G (Commercial Grade, *Group D Sites, See Below) | DQ | CY | 1,800 |
| 321204-4 | Crushed Aggregate Base - Grading G (Commercial Grade, Walking Paths) | DQ | CY | 100 |
| 321210-1 | Rockery Retaining Walls | DQ | SF | 3,400 |
| 322100-1 | Tent Pad - Single (Size 16' by 16') | AQ | EA | 29 |
| 322100-2 | Tent Pad - Double (Size 16' by 24') | AQ | EA | 4 |
| 322205-1 | Barrier Rocks - Gov't Furnished (Salvaged on Site) | AQ | EA | 90 |
| 322205-2 | Barrier Rocks - Commerical Source | AQ | EA | 80 |
| 322622-1 | Concrete Curbstops 6-Foot (Campground) | AQ | EA | 9 |
| 322622-2 | Concrete Curbstops 6-foot (Day Use Parking Area) | AQ | EA | 14 |
| 322622-3 | Concrete Curbstops 8-foot (Campground) | AQ | EA | 23 |
| 323110 | Cattle Guard (Relocate Existing) | LSQ | LS | 1 |
| 323116 | Road Closure Gate - 28 Foot (Double 14' Gate) | AQ | EA | 1 |
| 323120 | Stock Gate (Reinstalling Existing) | LSQ | LS | 1 |
| 323150 | Stock Wood Fence (Reinstall Existing) | LSQ | LS | 1 |
| 329206 | Seeding | LSQ | LS | Lump Sum |
| 332228-1 | Culvert - 12-inch Galv. Steel Corrugated Metal Pipe (16 Gage, 2 2/3"x1/2" Corrugations) | AQ | LF | 20 |
| 332228-2 | Culvert - 18-inch Galv. Steel Corrugated Metal Pipe (16 Gage, 2 2/3"x1/2" Corrugations) | AQ | LF | 530 |
| 332228-3 | Culvert - 24-inch Galv. Steel Corrugated Metal Pipe (16 Gage, 2 2/3"x1/2" Corrugations) | AQ | LF | 520 |

## OPTIONAL BID ITEMS

| | | | | |
|---|---|---|---|---|
| 010250-2 | Construction Staking | LSQ | LS | 1 |
| 011900-2 | Mobilization | LSQ | LS | 1 |
| 033540-4 | Concrete Sidewalk - 6-Inch thick (Day Use Area, 2 Paths) | AQ | CY | 27 |
| 129400-5 | Day Use Picnic Area (Includes 6" Concrete Pad with Fiber Mesh Reinforcement, 6" Crushed Aggregate Base, four (4) Expanded Metal Picnic Tables) | AQ | EA | 1 |
| 136000-1 | Shade Structure (24' by 24', Furnished and Installed, Day Use Picnic Area) | AQ | EA | 1 |
| 221105-3 | Water Hydrants (New near Site 7D) | AQ | EA | 1 |
| 311000-3 | Clearing and Grubbing (Day Use Picnic Area Only) | LSQ | LS | 1 |
| 312100-3 | Project Site Preparation and Grading (Day Use Picnic Area Only) | LSQ | LS | 1 |
| 321204-5 | Crushed Aggregate Base - Grading G (Commercial Grade, Walking Paths for Day Use Picnic Area Only) | DQ | CY | 50 |
| 321210-2 | Rockery Retaining Walls | DQ | SF | 150 |
| 321513 | 4 Foot Wide Trail (Native Surfacing) | AQ | LF | 300 |

| | | |
|---|---|---|
| **Group A Sites (1,3,4D, 6, 7D,8-10, 12, 14-19, 24, 26, 30)* | *18* | *SITES* |
| **Group B Sites (2, 5, 11, 22, 28, 31)* | *6* | *SITES* |
| **Group C Sites (13, 20, 21, 23, 25, 27, 29)* | *7* | *SITES* |
| **Group D Sites (Main CG Loop with 2 pullouts, day use road with parking stalls and turnaround, 3 new parking stalls in the main campground loop. This will also include the expansion work necessary for the existing restroom near Site 16)* | | |

## PROJECT DESCRIPTION

THE KENT'S LAKE CAMPGROUND RECONSTRUCTION PROJECT IS PART OF THE ONGOING GREAT AMERICAN OUTDOORS ACT (GAOA) PROGRAM. AS PART OF THE PROGRAM, THIS PROJECT WILL FOCUS ON RESTORING THE NATURAL CHARACTERISTICS OF THE CAMPGROUND WHILE ACCOMMODATING CAPACITY REQUIREMENTS WITH ONGOING INCREASES TO RECREATIONAL USE WITHIN THE FOREST AND SIZING REQUIREMENTS FOR VEHICLE USE WHILE STAYING IN APPROVED FOREST SERVICE CAMPGROUNDS.

THIS PROJECT WILL CONSIST OF RECONSTRUCTION/REHABILITATION OF THE EXISTING KENT'S LAKE CAMPGROUND LOCATED 15 MILES SOUTHEAST OF BEAVER, UTAH. THE PROJECT WILL CONSIST OF (BUT NOT LIMITED TO THESE BASE BID ITEMS); RECONSTRUCTION OF THE MAIN CAMPGROUND LOOP ROAD WITH ADJACENT PULLOUTS, RECONSTRUCTION OF THE DAY USE AREA ROADWAY WITH ADDING DEDICATED PARKING, REHABILITATION OF 30 REHABILITATED INDIVIDUAL FAMILY SITES WITH IMPROVED ACCESS, REHABILITATION OF 1 FAMILY GROUP SITE, IMPROVEMENTS TO THE EXISTING CAMPGROUND HOST SITE, ADDITION OF DEDICATED RESTROOM PARKING FOR RECENTLY ADDED VAULT RESTROOMS, REPLACEMENT OF EXISTING ROADWAY INFORMATION SIGNS, REPLACEMENT OF 9 WATER HYDRANTS, AND IMPROVED DRAINAGE THROUGHOUT THE CAMPGROUND. SEVERAL OF THE EXISTING INDIVIDUAL FAMILY SITES WILL REQUIRE THE ADDITION OF ROCKERY RETAINING WALLS, PLEASE VERIFY RETAINING WALL PLACEMENT PER THE PROJECT DRAWINGS.

REINSTALLATION OF AN EXISTING POLE TO POLE WOOD FENCE AND STANDARD STOCK GATE WILL BE REQUIRED AS PART OF THE ROADWAY REALIGNMENT.

THE FOLLOWING ITEMS WILL BE CONSIDERED OPTIONAL BID ITEMS AND WILL CONSIST OF (BUT NOT LIMITED TO); ADDITION OF A DAY USE PICNIC AREA (25' X 25' 6" THICK CONCRETE PAD WITH REINFORCEMENT), 4 NEW PICNIC TABLES, AND ONE (24' X 24') STEEL SHADE STRUCTURE. TWO SEPARATE CONCRETE SIDEWALKS (6" DEPTH), ONE NEW WATER HYDRANT, AND ALL NECESSARY PREPARATORY WORK FOR THIS DESIGNATED AREA.

PLEASE SEE THE SCHEDULE OF ITEMS FOR ALL WORK ASSOCIATED WITH THIS PROJECT.

United States Department of Agriculture
Forest Service

R4
INTERMOUNTAIN REGION

STAMPS, LOGOS, AND SEALS

| NO. | REVISION / ISSUE | DATE |
|---|---|---|
| 4 | | |
| 3 | | |
| 2 | | |
| 1 | | |

PROJECT NAME

**GAOA KENTS LAKE CAMPGROUND RECONSTRUCTION PROJECT**

**FISHLAKE NATIONAL FOREST**

**BEAVER RANGER DISTRICT**

DRAWING TITLE

**PROJECT DESCRIPTION/SCHEDULE OF ITEMS**

| | |
|---|---|
| DATE 02/20/2024 | ARCHIVE NO. |
| DESIGNER JR/RB | DRAWING SHEET NO. G3 |
| DRAWN JR/RB | |
| CHECKED R. ANDERSON | |
| PROJECT NO. | SHEET 3 OF 49 |

4/30/26 15:39 NATHANROBINSON C:\USERS\NATHANROBINSON\BOX\ENGDESIGN\FISHLAKE\KENTS.LAKE.CAMPGROUND.2023\DWG\02-03_G2-3_KENTS.LAKE.SHEET.INDEX.VICINITY\MAP.DWG;

LEGEND:

- EXISTING WATER HYDRANTS (ONLY REMOVE WHERE DESIGNATED)
- EXISTING FIRE RINGS TO BE REMOVED.
- EXISTING STRUCTURES *DO NOT REMOVE
- EXISTING WATER LINE (FOR REFERENCE)
- EXISTING PICNIC TABLES TO BE REMOVED.
- EXISTING CONCRETE VAULT FOUNDATION TO BE REMOVED.
- WV EXISTING WATER VALVES (FOR REFERENCE)
- EXISTING SPURS TO BE DECOMISSIONED
- EXISTING FENCE

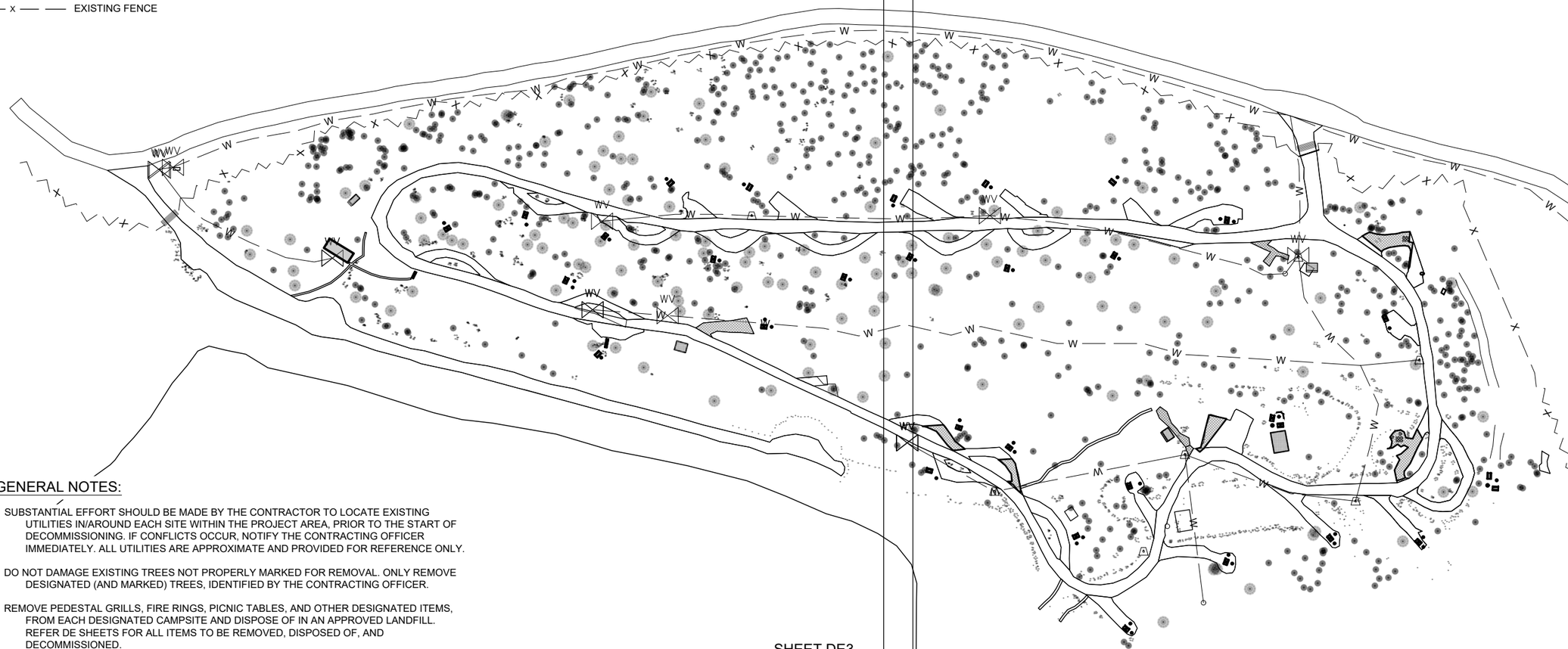


GENERAL NOTES:

SUBSTANTIAL EFFORT SHOULD BE MADE BY THE CONTRACTOR TO LOCATE EXISTING UTILITIES IN/AROUND EACH SITE WITHIN THE PROJECT AREA, PRIOR TO THE START OF DECOMMISSIONING. IF CONFLICTS OCCUR, NOTIFY THE CONTRACTING OFFICER IMMEDIATELY. ALL UTILITIES ARE APPROXIMATE AND PROVIDED FOR REFERENCE ONLY.

DO NOT DAMAGE EXISTING TREES NOT PROPERLY MARKED FOR REMOVAL. ONLY REMOVE DESIGNATED (AND MARKED) TREES, IDENTIFIED BY THE CONTRACTING OFFICER.

REMOVE PEDESTAL GRILLS, FIRE RINGS, PICNIC TABLES, AND OTHER DESIGNATED ITEMS, FROM EACH DESIGNATED CAMPSITE AND DISPOSE OF IN AN APPROVED LANDFILL. REFER DE SHEETS FOR ALL ITEMS TO BE REMOVED, DISPOSED OF, AND DECOMMISSIONED.

CONTRACTOR SHALL REMOVE ALL EXISTING FURNITURE AND STOCKPILE SALVAGABLE FURNITURE. ALL SALVAGABLE FURNITURE WILL BE PROPERLY MARKED AND STORED ON SITE. ALL OTHER FURNITURE NOT PROPERLY MARKED WILL BE REMOVED AND DISPOSED OF IN AN APPROVED LANDFILL.

EXISTING ROADWAYS WILL BE RECONSTRUCTED (R SHEETS) AND RESURFACED WITH 6" OF CRUSHED AGGREGATE.

EXISTING SPURS WILL BE RECONSTRUCTED (R SHEETS) AND RESURFACED WITH 6" OF CRUSHED AGGREGATE.

REMOVAL OF THE EXISTING RESTROOM VAULT (AND FOUNDATION ON THE WEST END OF CAMPGROUND LOOP) WILL BE COMPLETELY REMOVED. ALL CONTOURING/RESHAPING WILL REQUIRE STANDARD COMPACTION REQUIREMENTS FOR FUTURE CONSTRUCTION USE.

REMOVE ALL TREES WITHIN NEW CONSTRUCTION ZONES

United States Department of Agriculture
Forest Service

R4
INTERMOUNTAIN REGION

STAMPS, LOGOS, AND SEALS

| NO. | REVISION / ISSUE | DATE |
|---|---|---|
| 4 | | |
| 3 | | |
| 2 | | |
| 1 | | |

PROJECT NAME

# GAOA KENTS LAKE CAMPGROUND RECONSTRUCTION PROJECT

FISHLAKE NATIONAL FOREST

BEAVER RANGER DISTRICT

DRAWING TITLE

## DEMOLITION PLAN - OVERVIEW

| | |
|---|---|
| DATE 02/08/2024 | ARCHIVE NO. |
| DESIGNER JR/RB | DRAWING SHEET NO. DE1 |
| DRAWN JR/RB | |
| CHECKED R. ANDERSON | |
| PROJECT NO. | SHEET 4 OF 49 |

4/30/26 14:56 NATHANROBINSON C:\USERS\NATHANROBINSON\BOXENC\DESIGN\FISHLAKE\KENTS_LAKE_CAMPGROUND.2023\DWG\04 DE1-06 DE3_KENTSLAKE.DEMOPLAN.DWG;

GENERAL NOTES:

SEE SHEET DE1 FOR DECOMMISSIONING NOTES

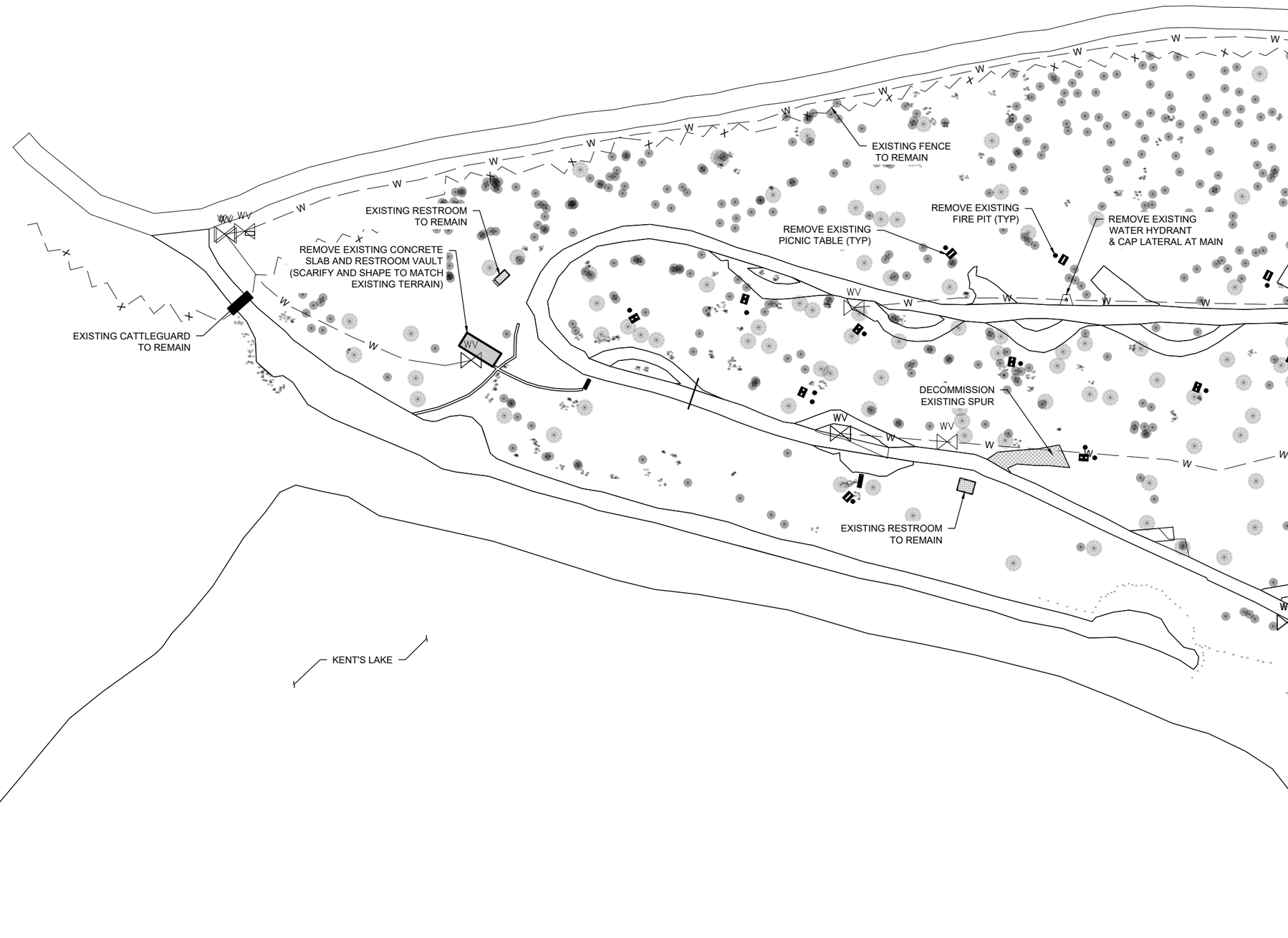


United States Department of Agriculture
Forest Service

R4
INTERMOUNTAIN REGION

STAMPS, LOGOS, AND SEALS

| NO. | REVISION / ISSUE | DATE |
|---|---|---|
| 4 | | |
| 3 | | |
| 2 | | |
| 1 | | |

PROJECT NAME

# GAOA KENTS LAKE CAMPGROUND RECONSTRUCTION PROJECT

FISHLAKE NATIONAL FOREST

BEAVER RANGER DISTRICT

DRAWING TITLE

## DEMOLITION PLAN - WEST

| | |
|---|---|
| DATE 02/08/2024 | ARCHIVE NO. |
| DESIGNER JR/RB | DRAWING SHEET NO. DE2 |
| DRAWN JR/RB | |
| CHECKED R. ANDERSON | |
| PROJECT NO. | SHEET 5 OF 49 |

4/30/26 14:56 NATHANROBINSON C:\USERS\NATHANROBINSON\BOXENG\DESIGN\FISHLAKE\KENTS_LAKE_CAMPGROUND_2023\DWG\04 DE1-06 DE3_KENTSLAKE_DEMOPLAN.DWG;

GENERAL NOTES:

SEE SHEET DE1 FOR DECOMMISSIONING NOTES

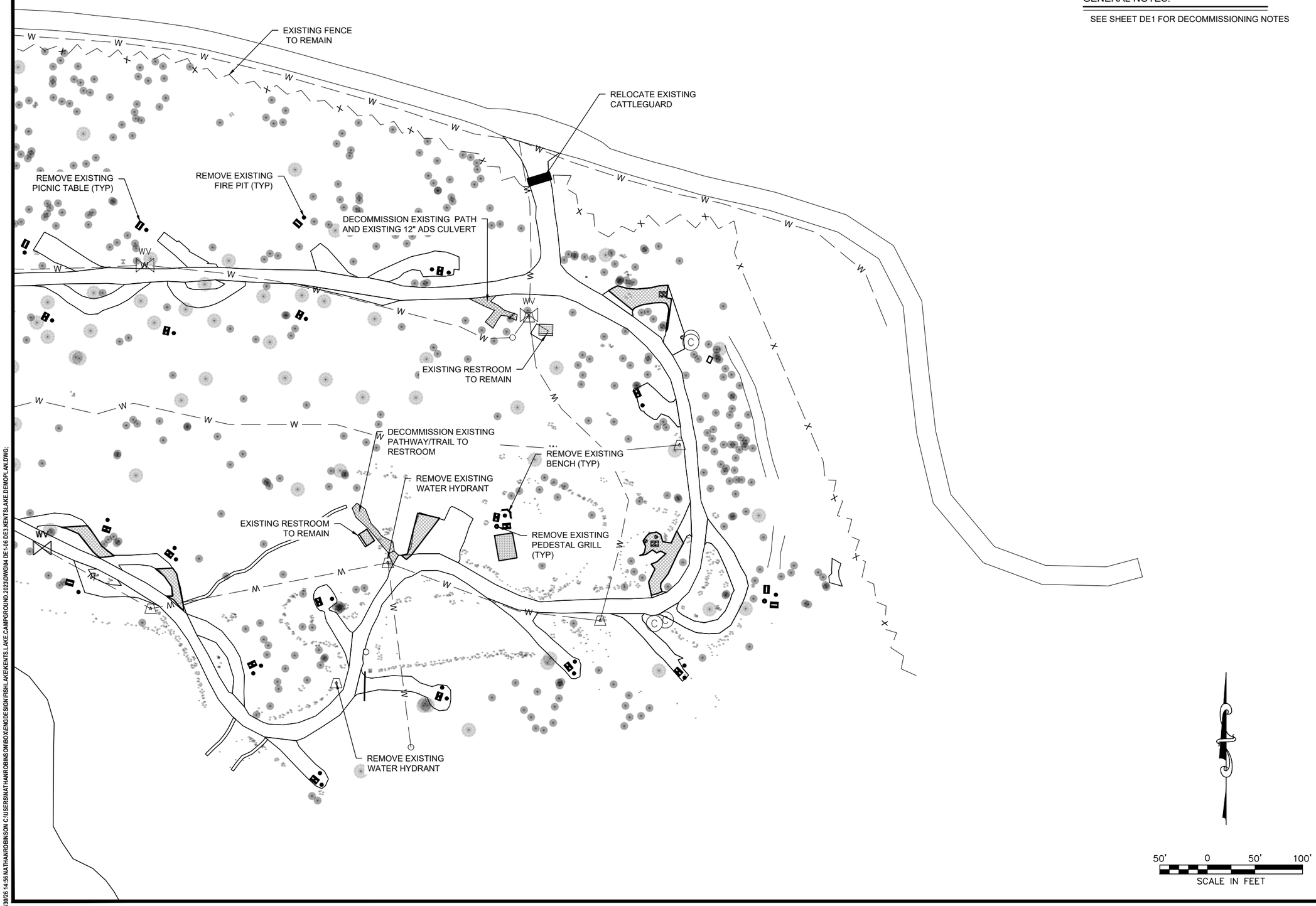


United States Department of Agriculture
Forest Service

R4
INTERMOUNTAIN REGION

STAMPS, LOGOS, AND SEALS

| NO. | REVISION / ISSUE | DATE |
|---|---|---|
| 4 | | |
| 3 | | |
| 2 | | |
| 1 | | |

PROJECT NAME

# GAOA KENTS LAKE CAMPGROUND RECONSTRUCTION PROJECT

FISHLAKE NATIONAL FOREST

BEAVER RANGER DISTRICT

DRAWING TITLE

## DEMOLITION PLAN - EAST

| | |
|---|---|
| DATE 02/08/2024 | ARCHIVE NO. |
| DESIGNER JR/RB | DRAWING SHEET NO. DE3 |
| DRAWN JR/RB | |
| CHECKED R. ANDERSON | |
| PROJECT NO. | SHEET 6 OF 49 |

4/30/26 14:56 NATHANROBINSON C:\USERS\NATHANROBINSON\BOXENG\DESIGN\FISHLAKE\KENTS.LAKE.CAMPGROUND.2023\DWG\04 DE-1-06 DE3.KENTSLAKE.DEMOPLAN.DWG;

## POINT TABLE

| POINT # | NORTHING | EASTING | ELEVATION | DESCRIPTION |
|---|---|---|---|---|
| 100 | 10415914.30 | 1365059.38 | 8876.07 | SAC GPS-100 |
| 101 | 10415385.71 | 1365002.95 | 8826.31 | SAC GPS-101 |
| 102 | 10415863.86 | 1363869.45 | 8819.85 | SAC GPS-102 |
| 200 | 10415742.63 | 1365226.70 | 8865.70 | SNL CP-200 |
| 201 | 10415522.78 | 1365225.96 | 8855.30 | SNL CP-201 |
| 202 | 10415569.42 | 1365024.91 | 8839.85 | SNL CP-202 |
| 203 | 10415566.34 | 1364663.79 | 8811.29 | SNL CP-203 |
| 204 | 10415758.16 | 1364305.85 | 8820.91 | SNL CP-204 |
| 205 | 10415994.48 | 1364096.75 | 8846.45 | SNL CP-205 |
| 206 | 10415917.99 | 1364445.82 | 8853.15 | SNL CP-206 |
| 207 | 10415915.15 | 1364894.42 | 8871.96 | SNL CP-207 |
| 208 | 10415891.86 | 1364695.61 | 8864.36 | SNL CP-208 |
| 209 | 10416050.58 | 1364261.37 | 8862.70 | SNL CP-209 |
| 210 | 10415984.66 | 1363796.54 | 8826.62 | SNL CP-210 |
| 211 | 10415786.78 | 1364103.39 | 8820.59 | SNL CP-211 |
| 212 | 10415656.50 | 1364491.46 | 8811.57 | SNL CP-212 |
| 213 | 10415908.84 | 1364200.17 | 8841.74 | SNL CP-213 |
| 214 | 10415649.74 | 1365153.57 | 8852.13 | SNL CP-214 |
| 215 | 10415851.84 | 1363599.95 | 8808.55 | SNL CP-215 |
| 216 | 10415934.52 | 1365248.97 | 8879.89 | SNL CP-216 |
| 217 | 10415731.04 | 1364980.68 | 8846.41 | SNL CP-217 |
| 218 | 10415423.23 | 1364839.35 | 8816.34 | SNL CP-218 |
| 219 | 10415631.73 | 1364581.96 | 8811.09 | TEMP SNL CP-219 |

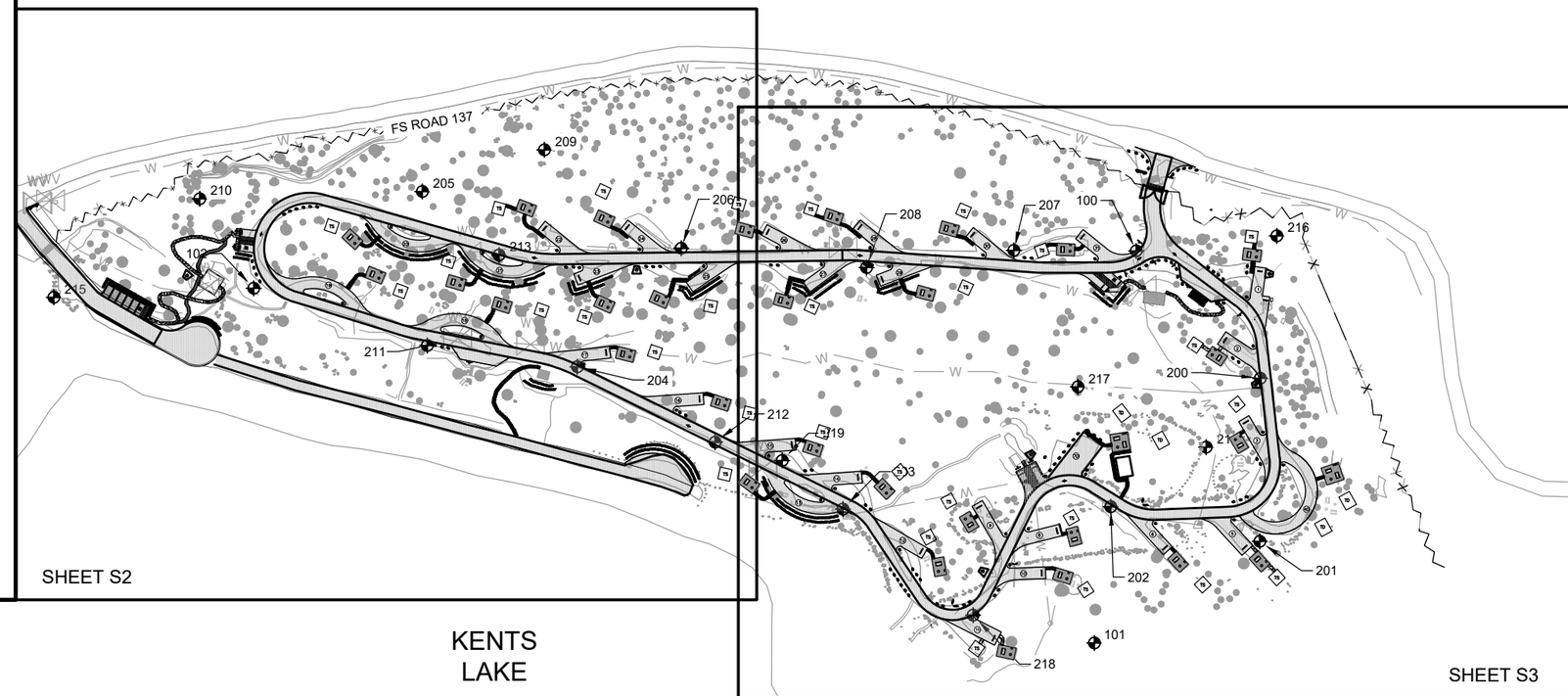


## LEGEND

*LEGEND SCALE: 1"=50'

- SINGLE FAMILY UNIT SITE
- DOUBLE UNIT FAMILY UNIT SITE
- TS — TENT PAD, SINGLE (16' BY 16')
- TD — TENT PAD, DOUBLE (16' BY 20')
- DOUBLE-UNIT VAULT COMFORT STATION BUILDING
- GATE (SEE SITE PLAN)
- AGGREGATE PATH
- CONCRETE PATH
- EXISTING HYDRANT
- REGULATORY SIGN
- BARRIER ROCK
- ROCKERY RETAINING WALL
- EXISTING VEGETATION
- X — EXISTING FENCE
- CONTROL POINT

## SITE INFO:

SINGLE FAMILY UNIT
29 UNITS X 5 PAOT = 145
INCLUDES 1 HOST SITE

DOUBLE FAMILY UNIT
2 UNITS X 10 PAOT = 20

TOTAL PAOT = 165

## SPUR INFO

| | |
|---|---|
| ACCESSIBLE SITES | 2, 5, 11, 22, 28, 31 |
| DOUBLE SITES | 4, 7 |
| ROCKERY RETAINING WALL | 13, 20, 21, 23, 25, 27, 29 |

NOTES:

1. NOTES AND LEGEND ON SHEET S1 APPLY.
2. REMOVE AND DISPOSE OF ALL EXISTING PICNIC TABLES, FIRE RINGS, UNIT MARKERS AND ALL SITE FURNISHINGS AND INSTALL NEW SINGLE AND DOUBLE FAMILY UNITS WHICH CONSIST OF NEW PICNIC TABLE(S), FIRE RING AND UTILITY TABLE(S).
3. INSTALL BARRIER ROCKS AS SHOWN ON THIS SHEET FOR VEHICLE CONTROL AS IDENTIFIED AND AS SHOWN ON THIS SHEET.
4. REINSTALL EXISTING UNIT MARKER POSTS FOR ALL CAMPSITES AS SHOWN ON THE S SHEETS.
5. OBLITERATE, SCARIFY AND INSTALL NATIVE SEED IN ALL AREAS TO BE RECLAIMED AND THAT ARE DISTURBED.
6. ACCESSIBLE SITES WILL HAVE 20-FOOT WIDE SPURS, CONCRETE FAMILY UNITS, AND CONCRETE PATHS.
7. REGULATORY SIGN LIST IS ON SHEET D15.
8. ROCKERY WALL SITES WILL INCLUDE THE CONSTRUCTION OF NEW CONCRETE STAIRS. SEE SHEET S2 AND S3 FOR CONCRETE STAIR LOCATIONS.

100' 0 100' 200'
SCALE IN FEET

United States Department of Agriculture
Forest Service

R4
INTERMOUNTAIN REGION

STAMPS, LOGOS, AND SEALS

| NO. | REVISION / ISSUE | DATE |
|---|---|---|
| 4 | | |
| 3 | | |
| 2 | | |
| 1 | REFLECTS CHANGES TO S2/S3 | 05/29/2025 |

PROJECT NAME

# GAOA KENTS LAKE CAMPGROUND RECONSTRUCTION PROJECT

FISHLAKE NATIONAL FOREST

BEAVER RANGER DISTRICT

DRAWING TITLE

## SITE PLAN - OVERVIEW

DATE 02/20/2024
ARCHIVE NO.
DESIGNER R. BUDGE
DRAWN JR/RB
CHECKED R. ANDERSON
PROJECT NO.
DRAWING SHEET NO. S1
SHEET 7 OF 49

4/30/26 15:37 NATHANROBINSON C:\USERS\NATHANROBINSON\BOX\ENGDESIGN\FISHLAKE\KENTS LAKE CAMPGROUND.2023\DWG\07 S1-10 S3.KENTSLAKE.SITEPLAN_WITH TREES.DWG;

NOTES:
1. NOTES AND LEGEND ON SHEET S1 APPLY.

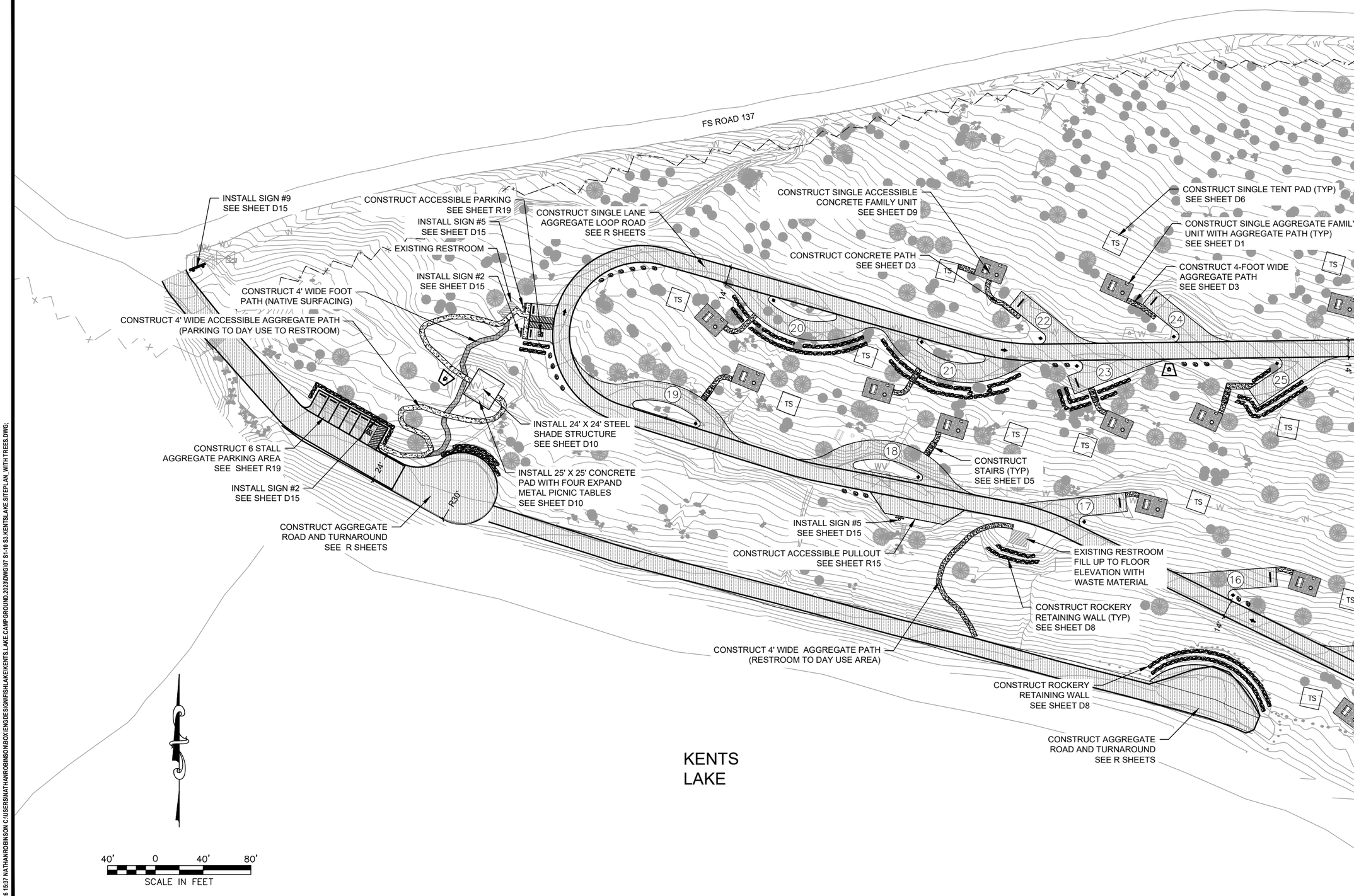


United States Department of Agriculture
Forest Service

R4
INTERMOUNTAIN REGION

STAMPS, LOGOS, AND SEALS

| NO. | REVISION / ISSUE | DATE |
|---|---|---|
| 4 | | |
| 3 | | |
| 2 | | |
| 1 | UPDATED LEADERS | 05/29/2025 |

PROJECT NAME

# GAOA KENTS LAKE CAMPGROUND RECONSTRUCTION PROJECT

FISHLAKE NATIONAL FOREST

BEAVER RANGER DISTRICT

DRAWING TITLE

## SITE PLAN - WEST AND DAY USE PARKING AREA

| | |
|---|---|
| DATE 02/20/2024 | ARCHIVE NO. |
| DESIGNER R. BUDGE | DRAWING SHEET NO. S2 |
| DRAWN JR/RB | |
| CHECKED R. ANDERSON | |
| PROJECT NO. | SHEET 8 OF 49 |

4/30/26 15:37 NATHANROBINSON C:\USERS\NATHANROBINSON\BOX\ENGDESIGN\FISHLAKE\KENTS LAKE CAMPGROUND 2023\DWG\07 S1-10 S3.KENTSLAKE.SITEPLAN_WITH TREES.DWG;

NOTES:
1. NOTES AND LEGEND ON SHEET S1 APPLY.

INSTALL BARRIER ROCK
SEE SHEET D7

INSTALL MINOR SITE I.D. SIGN
SEE SHEET D16

RE-INSTALL EXISTING CATTLE GUARD

INSTALL ROAD CLOSURE GATE
SEE SHEET R12-14

INSTALL SIGN #1
SEE SHEET D15

REINSTALL WOOD FENCE & STOCK GATE
SEE SHEET D17

CONSTRUCT SINGLE
TENT PAD (TYP)
SEE SHEET D6

CONSTRUCT SINGLE
ACCESSIBLE CONCRETE
FAMILY UNIT
SEE SHEET D9

INSTALL SIGN #1
SEE SHEET D15

INSTALL SIGN #4
SEE SHEET D15

CONSTRUCT SINGLE
AGGREGATE FAMILY UNIT
WITH AGGREGATE PATH (TYP)
SEE SHEET D1

INSTALL SIGN #3
SEE SHEET D15

REINSTALL EXISTING FEE TUBE
SEE SHEETS D15

FS ROAD 137

CONSTRUCT SINGLE
AGGREGATE FAMILY UNIT
WITH AGGREGATE PATH
SEE SHEET D1

INSTALL SIGN #6
SEE SHEET D15

CONSTRUCT
SINGLE TENT PAD
SEE SHEET D6

CONSTRUCT NEW HOST SITE
SEE SHEETS D16-D17

LOCATE EXISTING SEPTIC TANK AND REPLACE
SEE SHEET D14

CONSTRUCT ACCESSIBLE PARKING
SEE SHEET R19

INSTALL SIGN #5
SEE SHEET D15

INSTALL HOST SIGN #7
SEE SHEET D15

CONSTRUCT CONCRETE
STAIRS (TYP)
SEE SHEET D5

INSTALL SIGN #2
SEE SHEET D15

EXISTING
RESTROOM

CONSTRUCT CONCRETE PATH
SEE SHEET D3

CONSTRUCT ROCKERY
RETAINING WALL (TYP)
SEE SHEET D8

INSTALL SIGN #5
SEE SHEET D15

CONSTRUCT SINGLE
ACCESSIBLE CONCRETE
FAMILY UNIT
SEE SHEET D9

EXISTING FENCE
TO REMAIN

CONSTRUCT ACCESSIBLE PULLOUT
SEE SHEET R15

CONSTRUCT DOUBLE
FAMILY UNIT, TENT PADS
SEE SHEET D6

CONSTRUCT DOUBLE FAMILY UNIT
AGGREGATE PAD WITH AGGREGATE PATH
SEE SHEET D1

CONSTRUCT DOUBLE FAMILY UNIT
WITH AGGREGATE PATH
SEE SHEET D1

INSTALL SIGN #5
SEE SHEET D15

INSTALL BARRIER ROCK
SEE SHEET D7

INSTALL SIGN #2
SEE SHEET D15

CONSTRUCT AGGREGATE PATH
SEE SHEET D3

CONSTRUCT DOUBLE TENT PAD
SEE SHEET D6

CONSTRUCT SINGLE ACCESSIBLE
CONCRETE FAMILY UNIT
SEE SHEET D9

CONSTRUCT SINGLE TENT PAD
SEE SHEET D6

KENTS
LAKE

CONSTRUCT CONCRETE PATH
SEE SHEET D3

CONSTRUCT CONCRETE PATH
SEE SHEET D3

CONSTRUCT SINGLE
ACCESSIBLE CONCRETE
FAMILY UNIT
SEE SHEET D9

40' 0 40' 80'
SCALE IN FEET

USDA FOREST SERVICE

United States Department of Agriculture
Forest Service

R4
INTERMOUNTAIN REGION

STAMPS, LOGOS, AND SEALS

| NO. | REVISION / ISSUE | DATE |
|---|---|---|
| 4 | | |
| 3 | | |
| 2 | | |
| 1 | UPDATED LEADERS ONLY | 05/29/2025 |

PROJECT NAME

# GAOA KENTS LAKE CAMPGROUND RECONSTRUCTION PROJECT

FISHLAKE
NATIONAL FOREST

BEAVER RANGER DISTRICT

DRAWING TITLE

SITE
PLAN - EAST

| | |
|---|---|
| DATE 02/20/2024 | ARCHIVE NO. |
| DESIGNER R. BUDGE | DRAWING SHEET NO. S3 |
| DRAWN JR/RB | |
| CHECKED R. ANDERSON | |
| PROJECT NO. | SHEET 9 OF 49 |

4/30/26 15:37 NATHANROBINSON C:\USERS\NATHANROBINSON\BOXENG\DESIGN\FISHLAKE\KENTSLAKE.CAMPGROUND.2023\DWG\07 S1-10 S3.KENTSLAKE.SITEPLAN_WITH TREES.DWG;

NOTE:
1. ALL SITE FURNISHINGS SHALL BE FURNISHED AND INSTALLED BY THE CONTRACTOR.
2. ALL AGGREGATE FOR FAMILY UNITS AND PATHS SHALL BE FURNISHED AND INSTALLED BY THE CONTRACTOR.
3. FAMILY UNITS THAT ARE NOT LOCATED DIRECTLY ADJACENT TO SPURS SHOULD BE STAKED TO SELF BALANCE (CUTS AND FILLS EARTHWORK) NO ADDITIONAL BORROW MATERIAL WILL BE IMPORTED.

FAMILY UNITS AT SITES 2, 5, 11, 22, 27, AND 31 SHALL BE CONCRETE PADS AND PATHS. (SEE SHEET D9)

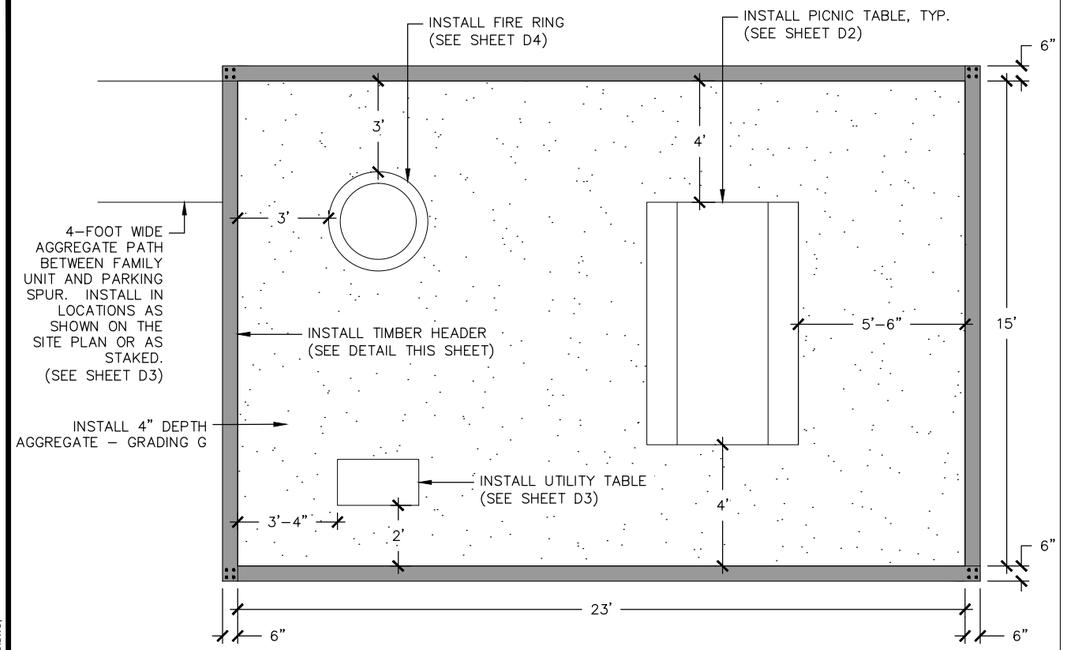


## SINGLE FAMILY UNIT (NO SCALE)

(PLAN VIEW)

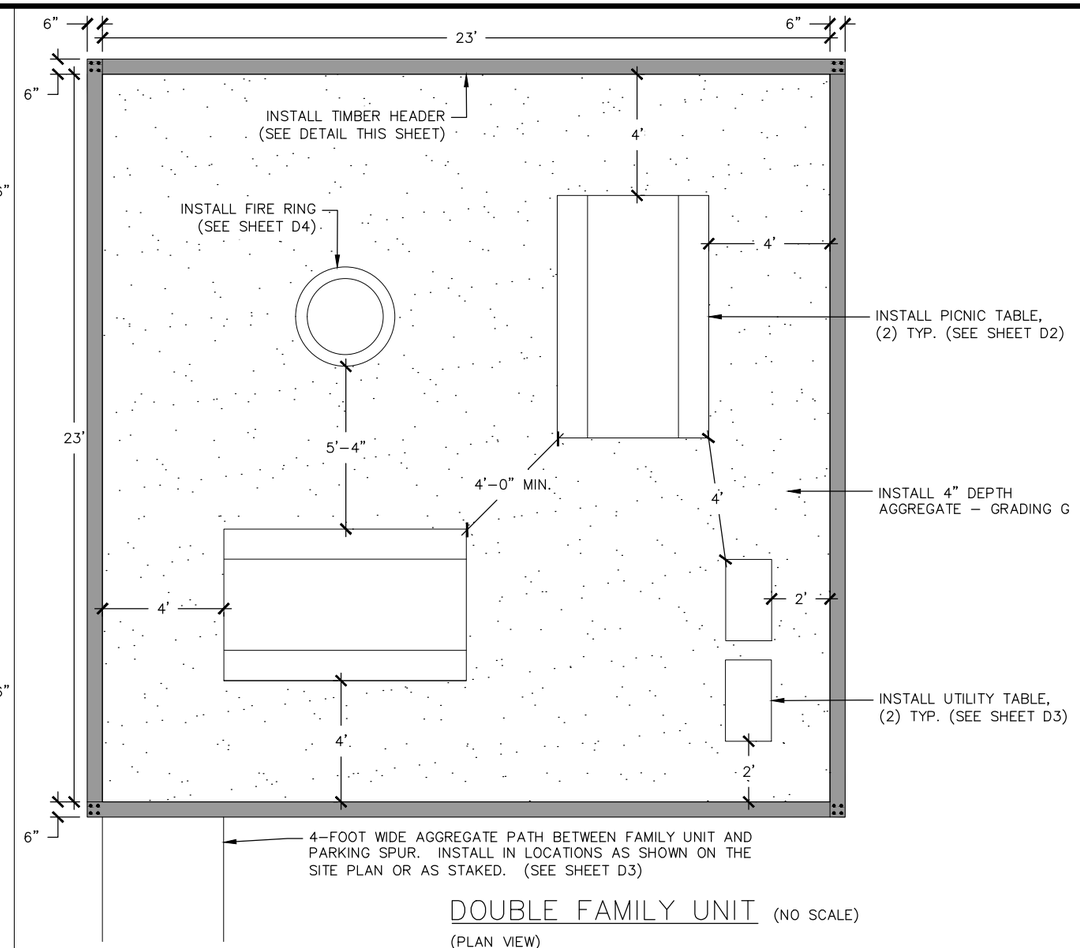


## DOUBLE FAMILY UNIT (NO SCALE)

(PLAN VIEW)

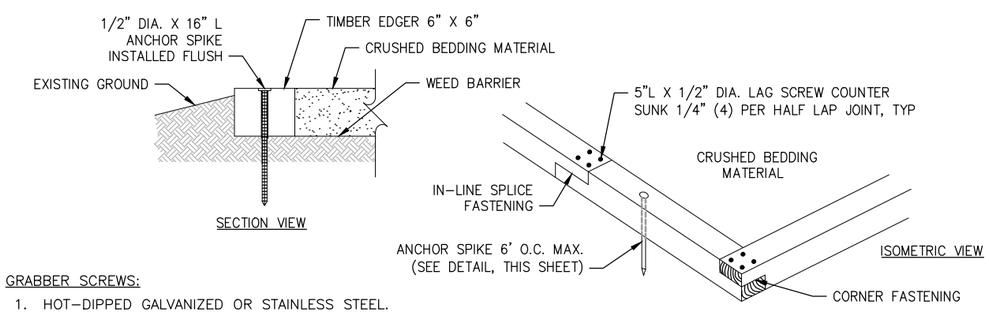


GRABBER SCREWS:
1. HOT–DIPPED GALVANIZED OR STAINLESS STEEL.
2. EXTEND INTO THE ATTACHED PIECE 1" MINIMUM WHEN PULLING ACROSS THE GRAIN AND 2" WHEN PULLING ALONG THE GRAIN.
3. INSTALLED IN PRE–DRILLED HOLES, 1" FROM EDGES, FLUSH WITH SURFACE.

TIMBER:
1. SINGLE TIMBER SHALL BE INSTALLED WITHOUT SPLICES ON SIDES UP TO 16' LONG.
2. ONE SPLICE IS ALLOWED PER EDGE. SHORT BOARDS USED IN SPLICES SHALL BE A MINIMUM OF 6' LONG.
3. PRE–DRILL 7/16" HOLE THROUGH TIMBERS WHERE ANCHOR SPIKES WILL BE INSTALLED.
4. TREAT ALL CUT TIMBER ENDS.

## TIMBER HEADER HALF LAP JOINT AND ANCHOR SPIKE DETAILS

(NO SCALE)

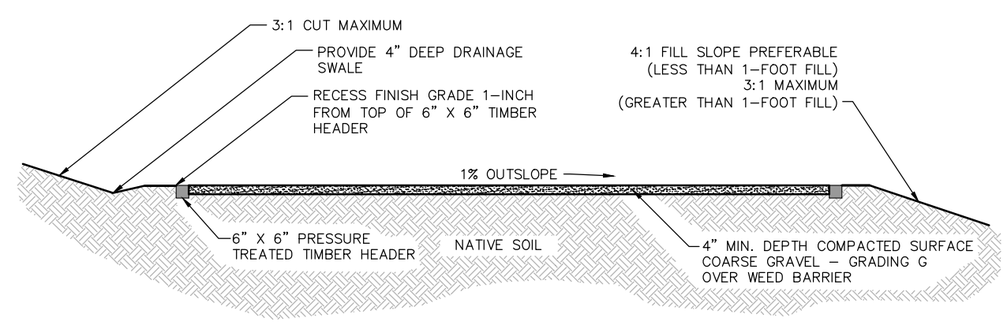


## TYPICAL AGGREAGEATE SURFACE FAMILY UNIT CUT AND FILL (NO SCALE)

(SECTION VIEW)

United States Department of Agriculture
Forest Service

R4
INTERMOUNTAIN REGION

STAMPS, LOGOS, AND SEALS

| NO. | REVISION / ISSUE | DATE |
|---|---|---|
| 4 | | |
| 3 | | |
| 2 | | |
| 1 | UPDATED DIMENSIONS ON PAD | 05/29/2025 |

PROJECT NAME

**GAOA KENTS LAKE CAMPGROUND RECONSTRUCTION PROJECT**

**FISHLAKE NATIONAL FOREST**

**BEAVER RANGER DISTRICT**

DRAWING TITLE

**FAMILY UNITS AND AGGREGATE PAD LAYOUT DETAILS**

| | |
|---|---|
| DATE 12/15/2024 | ARCHIVE NO. |
| DESIGNER R.BUDGE | DRAWING SHEET NO. D1 |
| DRAWN R.BUDGE | |
| CHECKED R. ANDERSON | |
| PROJECT NO. | SHEET 10 OF 49 |

2/10/26 10:15 NATHANROBINSON C:\USERS\NATHANROBINSON\BOXENGDESIGN\FISHLAKE\KENTS LAKE CAMPGROUND 2023\DWG\10 D01_KENTS LAKE FAMILY UNITS AGG PAD.DWG;

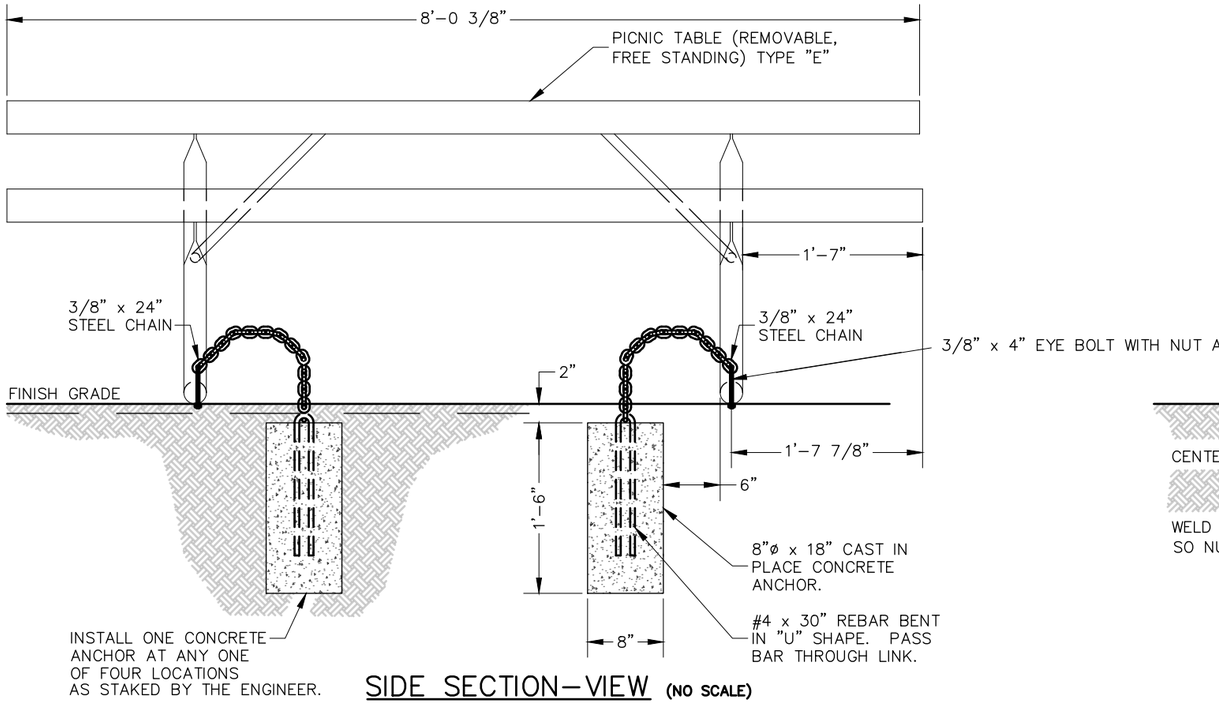


SIDE SECTION–VIEW (NO SCALE)

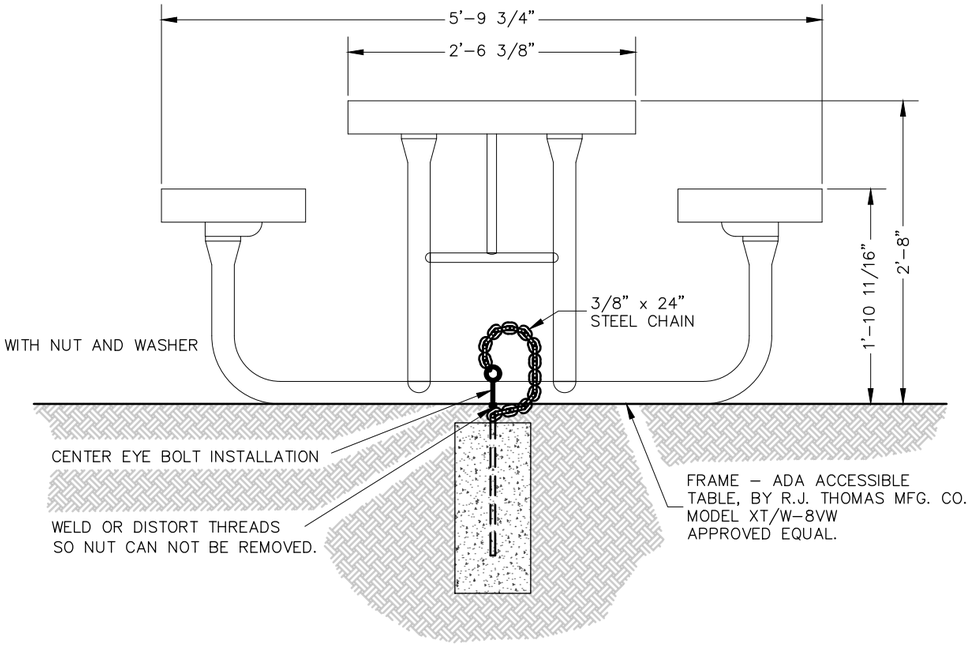


END SECTION–VIEW (NO SCALE)

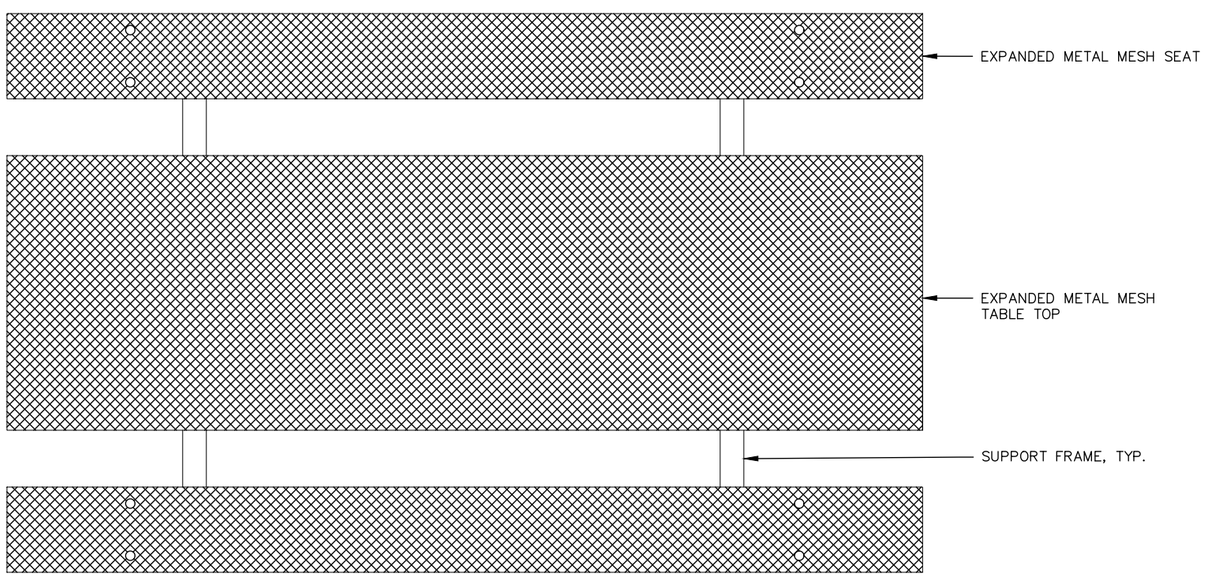


PLAN VIEW (NO SCALE)

NOTES:

1. UNLESS OTHERWISE SPECIFIED, ALL DIMENSIONS ARE PER ANSI Y14.5M–1982.
2. UNLESS OTHERWISE SPECIFIED, ALL DIMENSIONS ARE IN INCHES.
3. DO NOT SCALE DRAWING.
4. THE CHAIN SHALL BE INSTALLED SO IT LAYS WITH FINISH GRADE.
5. TABLE MODEL XT/CW–8VW IS A SPECIAL TABLE MANUFACTURED FOR THE FOREST SERVICE. THE CONTRACTOR SHALL BE RESPONSIBLE TO CONTACT THE SPECIFIED MANUFACTURER TO HAVE THE TABLE MANUFACTURED IN ACCORDANCE WITH R.J. THOMAS MFG. CO.

United States Department of Agriculture
Forest Service

R4
INTERMOUNTAIN REGION

STAMPS, LOGOS, AND SEALS

| NO. | REVISION / ISSUE | DATE |
|---|---|---|
| 4 | | |
| 3 | | |
| 2 | | |
| 1 | | |

PROJECT NAME

**GAOA KENTS LAKE CAMPGROUND RECONSTRUCTION PROJECT**

**FISHLAKE NATIONAL FOREST**

**BEAVER RANGER DISTRICT**

DRAWING TITLE

**8-FOOT EXPANDED METAL PICNIC TABLE (AGGREGATE PAD)**

| | |
|---|---|
| DATE 02/15/2024 | ARCHIVE NO. |
| DESIGNER R.BUDGE | DRAWING SHEET NO. D2 |
| DRAWN R.BUDGE | |
| CHECKED R. ANDERSON | |
| PROJECT NO. | SHEET 11 OF 49 |

2/10/26 10:08 NATHANROBINSON C:\USERS\NATHANROBINSON\BOXENC\DESIGN\FISHLAKE\KENTS.LAKE.CAMPGROUND.2023\DWG\11 D02 KENTS.LAKE.EXPANDED.METAL.MESH.MOVABLE.TABLE.AGGREGATE.PAD.DWG;

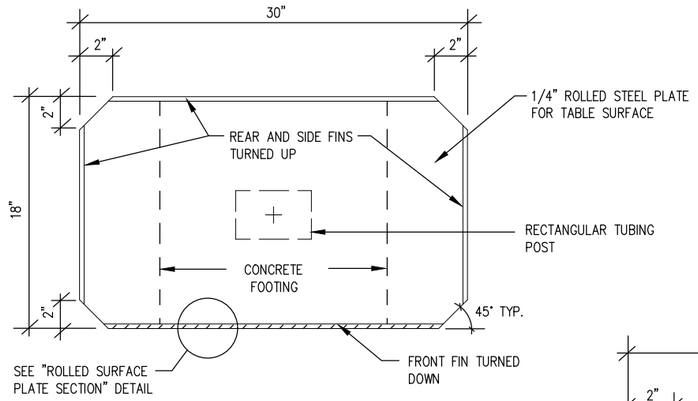


PLAN VIEW
NO SCALE

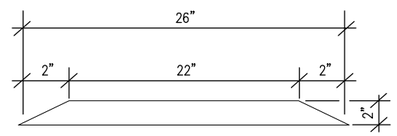


TOP SIDE FIN
NO SCALE

NOTE:
TURN DOWN FRONT FIN AND TURN UP BACK & SIDE FINS @ 90 DEGREES FROM TABLE SURFACE.

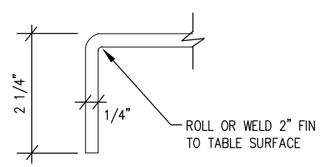


ROLLED SURFACE PLATE SECTION
NO SCALE

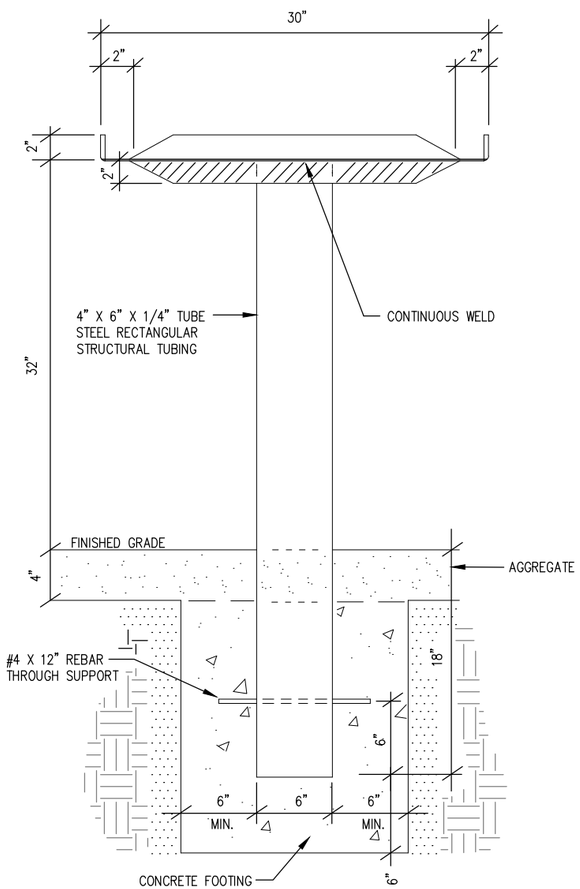


SIDE VIEW AND BASE INSTALLATION
NO SCALE

NOTES:

1. SPURS AND SHARP EDGES SHALL BE GROUND SMOOTH.
2. ALL SURFACES SHALL BE POWDER COATED WITH HEAT RESISTANT STOVE BLACK.
3. UTILITY TABLE SHALL BE PILOT ROCK MODEL #ULT/B-1 OR APPROVED EQUAL.

UTILITY TABLE INSTALLATION
NO SCALE

NOTES:

1. PATHS SHOULD BE 5% SLOPE OR LESS; HOWEVER, THE CONTRACTING OFFICERS REPRESENTATIVE MAY APPROVE PATHS THAT SLOPE 8.33% FOR UP TO 50 FEET, OR 10% FOR UP TO 30 FEET. CROSS SLOPES SHOULD NOT EXCEED 2% BUT MAY BE UP TO 3% TO ENSURE PROPER DRAINAGE.
2. PATHS SHALL BE STAKED TO SIT ON EXISTING GROUND (WHERE POSSIBLE) AS SHOWN ON THESE DRAWINGS.
3. CONCRETE CONTROL JOINTS SHALL BE PLACED IN CONCRETE PATHS AT A MAXIMUM SPACING OF 5 FEET. EXPANSION JOINTS SHALL BE SPACED TO A MAXIMUM OF 40 FEET AND AT INTERSECTIONS WITH FAMILY UNITS AND BUILDINGS.
4. SEE CONCRETE FINISH DETALS ON SHEET D12.
5. SEE SHEET D5 FOR CONCRETE STAIRS DETAIL.
6. SEE SPECIFICATION 033000.

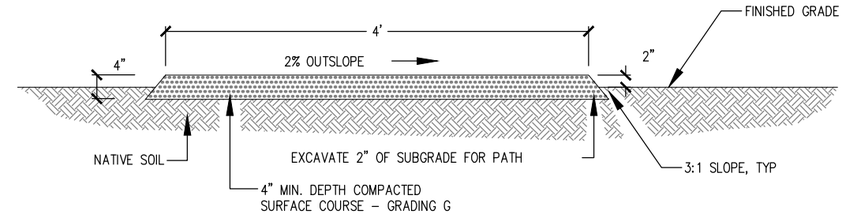


(ON-GRADE – SECTION VIEW)

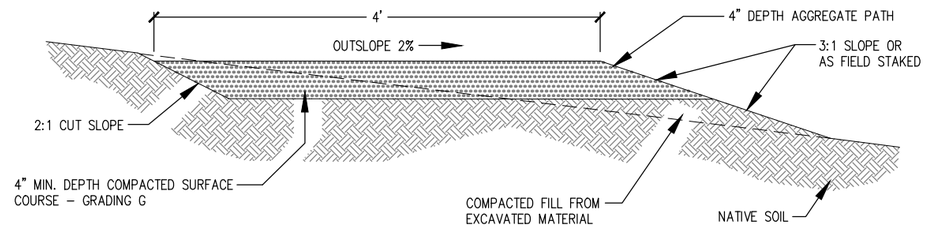


(CUT AND FILL – SECTION VIEW)

AGGREGATE PATH DETAILS (NO SCALE)

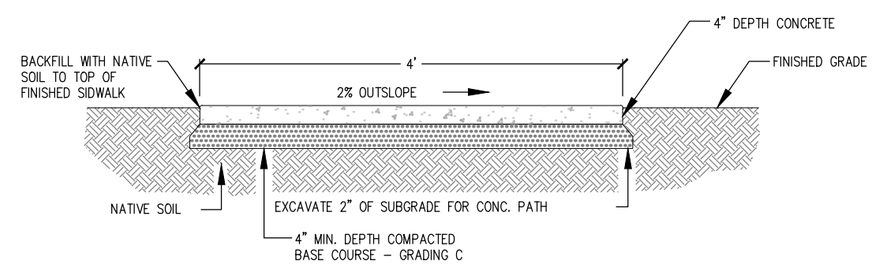


(ON-GRADE – SECTION VIEW)

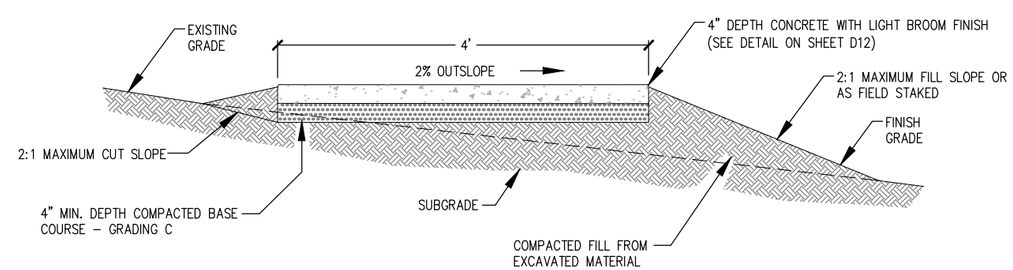


(CUT AND FILL – SECTION VIEW)

CONCRETE PATH DETAILS (NO SCALE)

United States Department of Agriculture
Forest Service

R4
INTERMOUNTAIN REGION

STAMPS, LOGOS, AND SEALS

| NO. | REVISION / ISSUE | DATE |
|---|---|---|
| 4 | | |
| 3 | | |
| 2 | | |
| 1 | | |

PROJECT NAME

**GAOA KENTS LAKE CAMPGROUND RECONSTRUCTION PROJECT**

**FISHLAKE NATIONAL FOREST**

**BEAVER RANGER DISTRICT**

DRAWING TITLE

**UTILITY TABLE (EMBEDDED POST) AND PATH DETAILS**

| | |
|---|---|
| DATE 02/15/2024 | ARCHIVE NO. |
| DESIGNER R.BUDGE | DRAWING SHEET NO. D3 |
| DRAWN R.BUDGE | |
| CHECKED R. ANDERSON | |
| PROJECT NO. | SHEET 12 OF 49 |

2/10/25 10:15 NATHANROBINSON C:\USERS\NATHANROBINSON\BOXENG\DESIGN\FISHLAKE\KENTS LAKE CAMPGROUND 2023\DWG\12 D03_KENTS LAKE UTILITY_TABLE_AGG_PATHS.DWG;

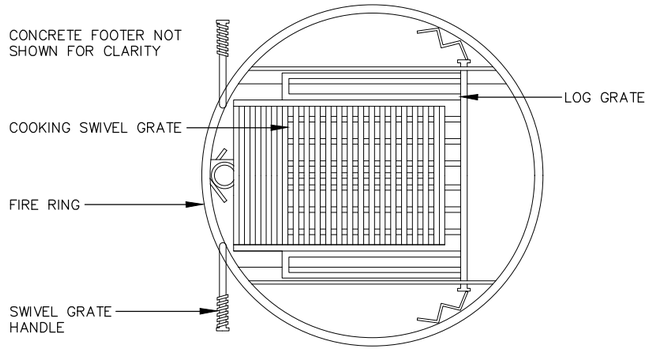


PLAN VIEW

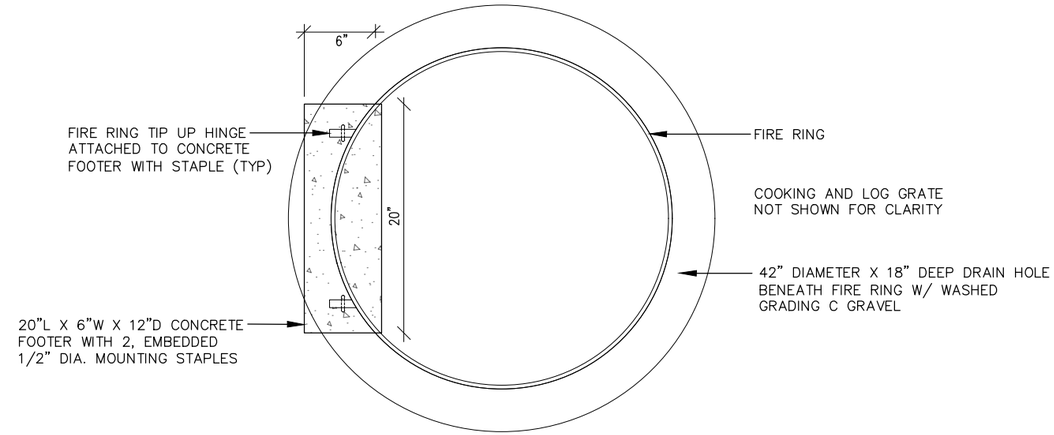


PLAN VIEW

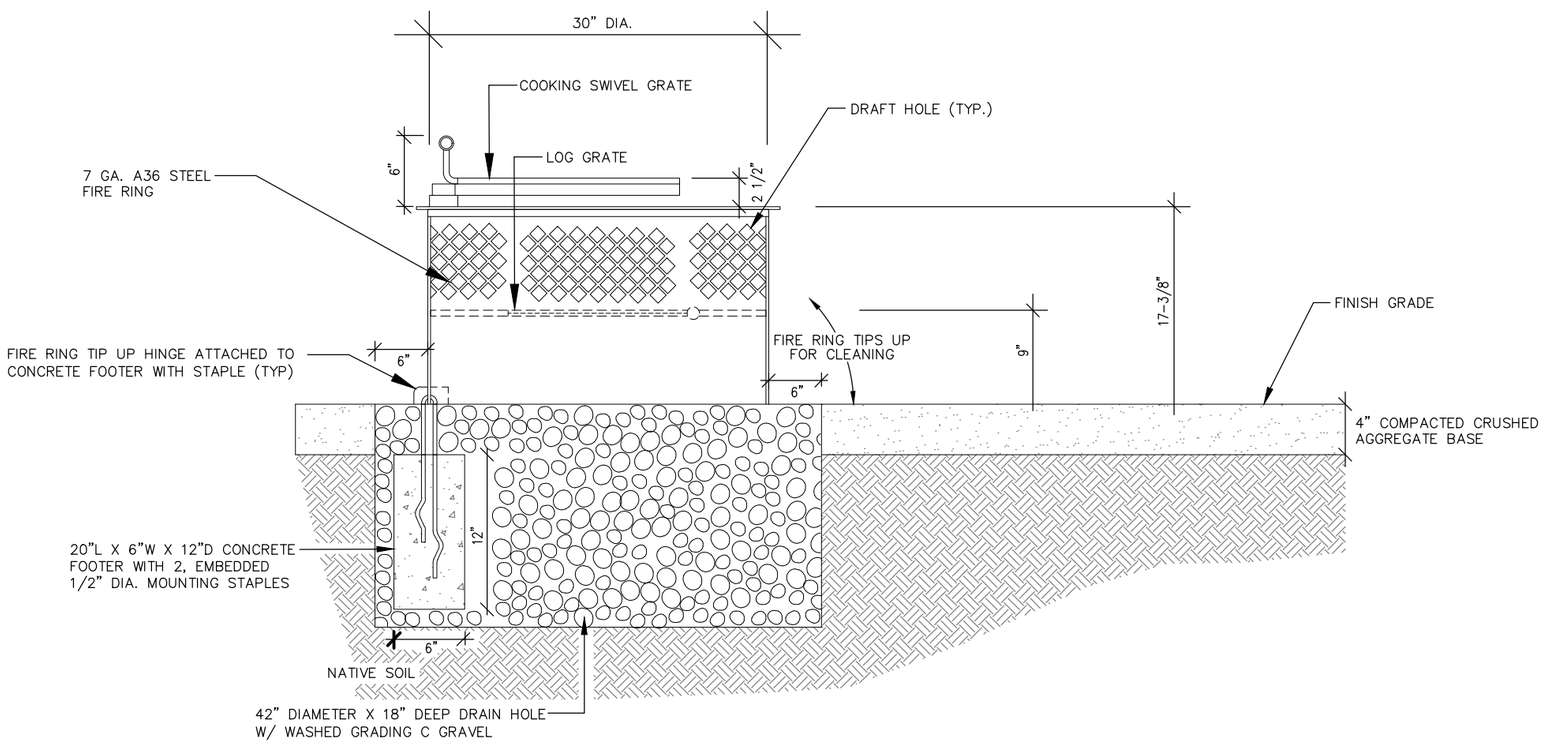


SECTION VIEW

NOTES:

1. FIRE RING SHALL BE FURNISHED AND INSTALLED BY THE CONTRACTOR.
2. FIRE RING SHALL BE MODEL: JAMESTOWN 30 INCH FIREVIEW RING WITH 290 SQUARE INCH SWIVEL COOKING GRATE TOP AND LOG GRATE, BLACK POWDER COAT FINISH, 17 3/8 INCHES HIGH WITH MOUNTING STAPLES. SKU# 14364 AS MANUFACTURED BY JAMESTOWN ADVANCED PRODUCTS. PHONE (800) 452-0639 OR AN APPROVED EQUAL.

United States Department of Agriculture
Forest Service

R4
INTERMOUNTAIN REGION

STAMPS, LOGOS, AND SEALS

| NO. | REVISION / ISSUE | DATE |
|---|---|---|
| 4 | | |
| 3 | | |
| 2 | | |
| 1 | | |

PROJECT NAME

**GAOA KENTS LAKE CAMPGROUND RECONSTRUCTION PROJECT**

**FISHLAKE NATIONAL FOREST**

**BEAVER RANGER DISTRICT**

DRAWING TITLE

**METAL FIRE RING DETAILS (AGGREGATE PAD FAMILY UNITS)**

| | |
|---|---|
| DATE 02/15/2024 | ARCHIVE NO. |
| DESIGNER R.BUDGE | DRAWING SHEET NO. D4 |
| DRAWN R.BUDGE | |
| CHECKED R. ANDERSON | |
| PROJECT NO. | SHEET 13 OF 49 |

2/10/26 10:15 NATHANROBINSON C:\USERS\NATHANROBINSON\BOXENG\DESIGN\FISHLAKE\KENTSLAKE.CAMPGROUND.2023\DWG\13\D04_KENTSLAKE.METAL_FIRE_RING_FOR_FAMILY_UNITS_AGG_PAD.DWG;

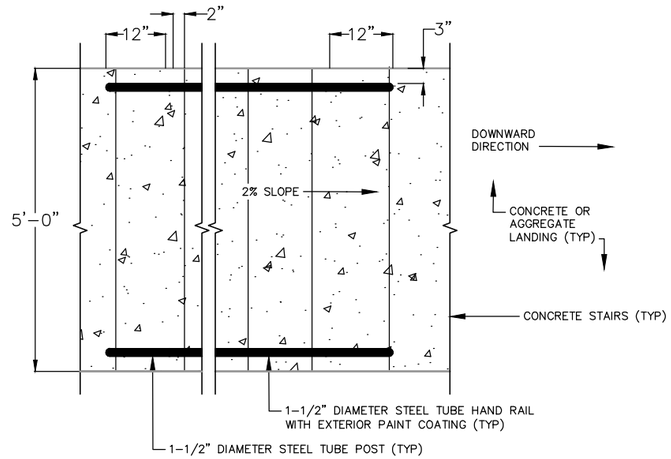


(PLAN VIEW)

NOTE:
INSTALL RAILINGS WHEN 4 OR MORE STAIRS ARE REQUIRED.

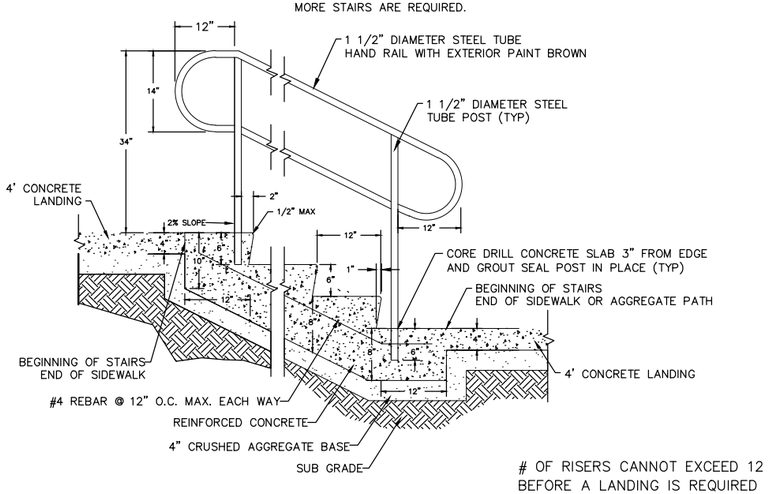


# OF RISERS CANNOT EXCEED 12 BEFORE A LANDING IS REQUIRED

(SECTION-ELEVATION)

## STAIRS DETAIL (NO SCALE)

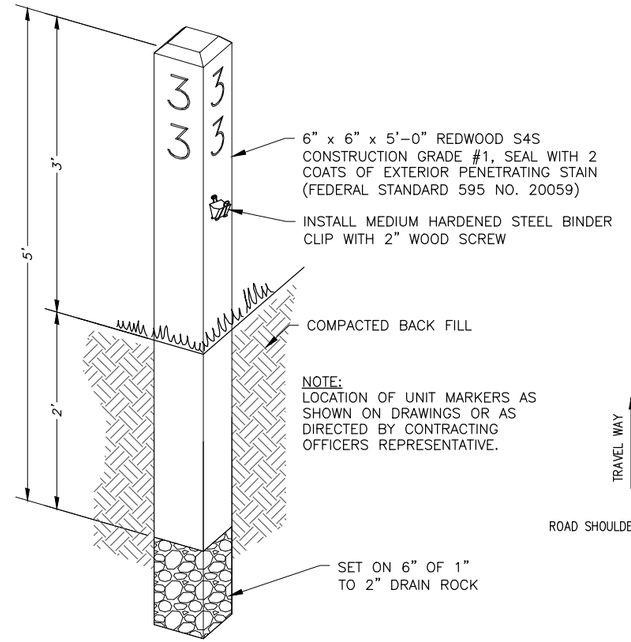


NOTE:
LOCATION OF UNIT MARKERS AS SHOWN ON DRAWINGS OR AS DIRECTED BY CONTRACTING OFFICERS REPRESENTATIVE.

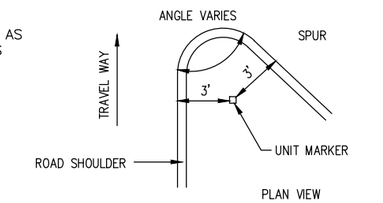


UNIT MARKER LOCATION

## UNIT MARKER - DETAIL (NO SCALE)

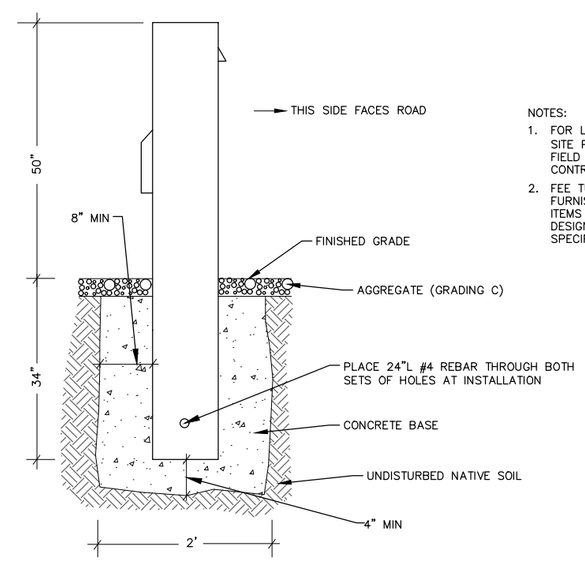


ELEVATION VIEW

NOTES:
1. FOR LOCATION OF FEE TUBE SEE SITE PLAN SHEETS AND/OR AS FIELD STAKED BY THE CONTRACTING OFFICER.
2. FEE TUBE SHALL BE GOV'T FURNISHED. THIS WILL AN EXISTING ITEMS TO BE REINSTALLED IN A DESIGNATED LOCATION. SEE SPECIFICATION 129700.

United States Department of Agriculture
Forest Service

R4
INTERMOUNTAIN REGION

STAMPS, LOGOS, AND SEALS

| NO. | REVISION / ISSUE | DATE |
|---|---|---|
| 4 | | |
| 3 | | |
| 2 | | |
| 1 | | |

PROJECT NAME

**GAOA KENTS LAKE CAMPGROUND RECONSTRUCTION PROJECT**

**FISHLAKE NATIONAL FOREST**

**BEAVER RANGER DISTRICT**

DRAWING TITLE

**STAIRS, UNIT MARKER, AND FEE TUBE DETAILS**

| | |
|---|---|
| DATE 02/15/2024 | ARCHIVE NO. |
| DESIGNER R.BUDGE | DRAWING SHEET NO. D5 |
| DRAWN R.BUDGE | |
| CHECKED R. ANDERSON | |
| PROJECT NO. | SHEET 14 OF 49 |

2/10/25 10:18 NATHANROBINSON C:\USERS\NATHANROBINSON\BOXENG\DESIGN\FISHLAKE\KENTS LAKE CAMPGROUND 2023\DWG\14 D05_KENTS LAKE UNIT_MRKR_STAIRS.DWG;

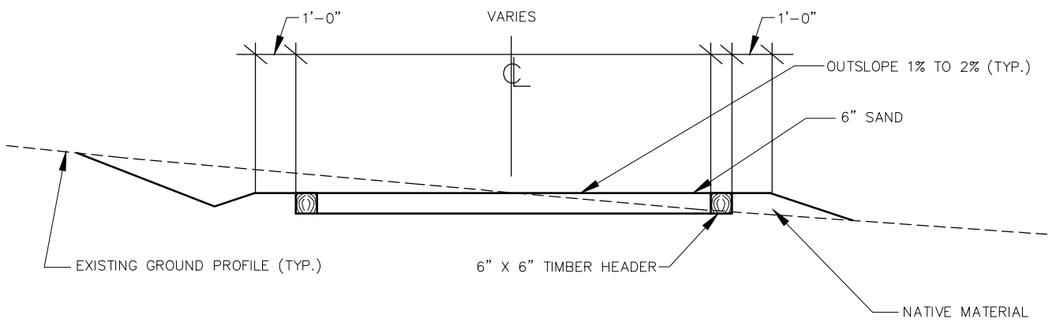


TYPICAL TENT PAD SECTION
(NO SCALE)

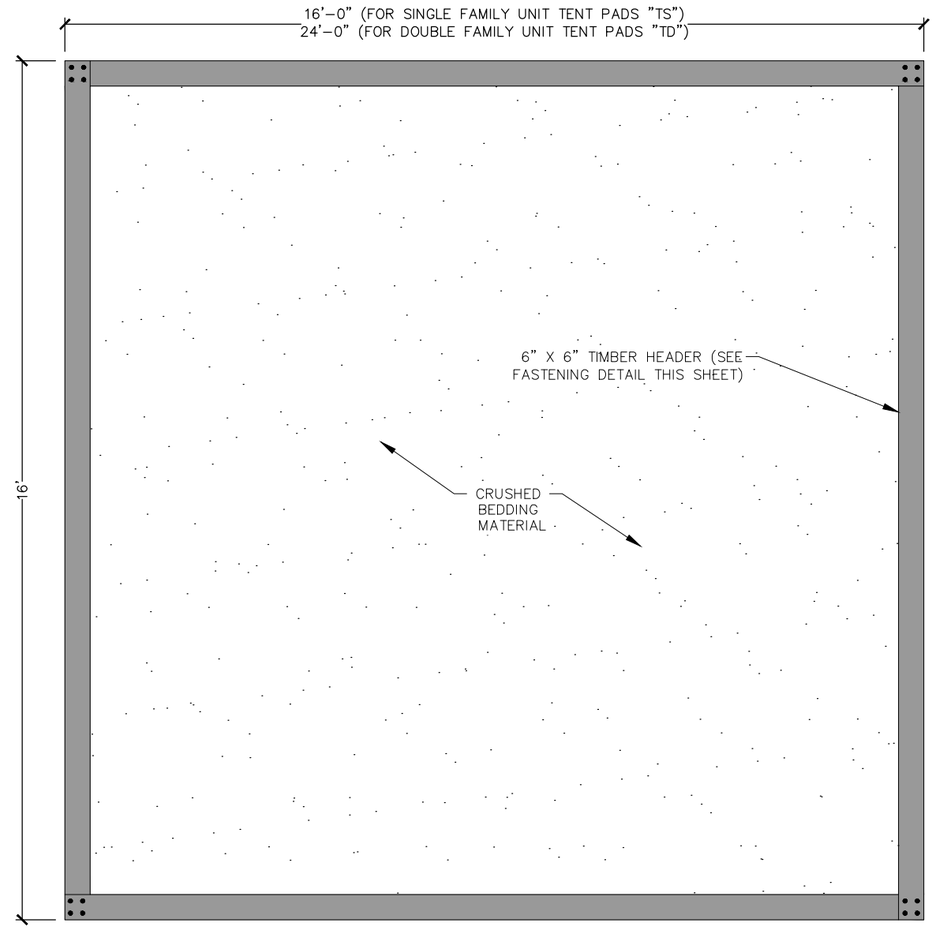


PLAN VIEW
(NO SCALE)

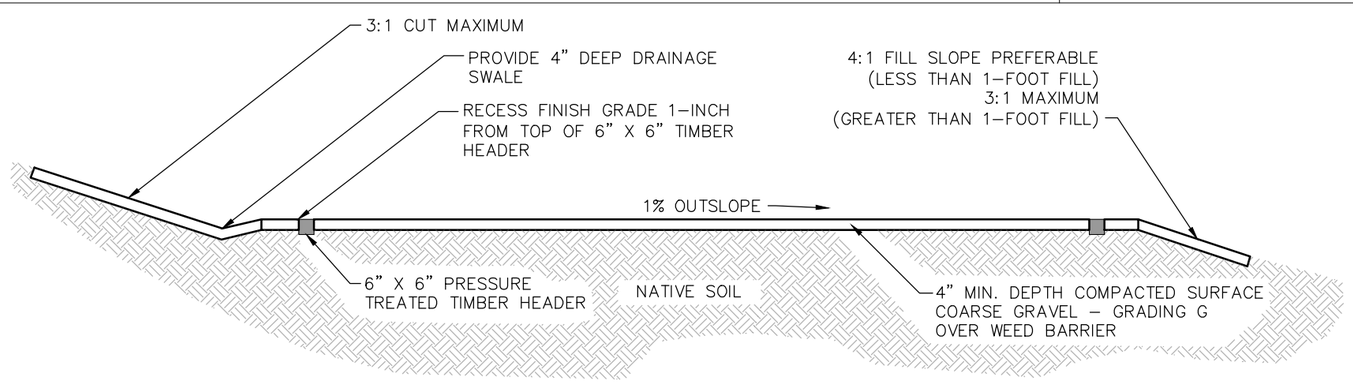


CROSS SECTION
(NO SCALE)

NOTE:

1. AT A MINIMUM 20% OF ALL TENT PAD SITES SHALL BE ACCESSIBLE (AS SHOWN ON THE DRAWINGS OR TO BE DETERMINED IN THE FIELD BY THE CONTRACTING OFFICER).
2. TENT PADS SHOULD BE STAKED TO SELF BALANCE (CUTS AND FILLS).

United States Department of Agriculture
Forest Service

R4
INTERMOUNTAIN REGION

STAMPS, LOGOS, AND SEALS

| NO. | REVISION / ISSUE | DATE |
|---|---|---|
| 4 | | |
| 3 | | |
| 2 | | |
| 1 | | |

PROJECT NAME

**GAOA KENTS LAKE CAMPGROUND RECONSTRUCTION PROJECT**

**FISHLAKE NATIONAL FOREST**

**BEAVER RANGER DISTRICT**

DRAWING TITLE

**TENT PAD DETAILS**

| | |
|---|---|
| DATE 02/15/2024 | ARCHIVE NO. |
| DESIGNER R.BUDGE | DRAWING SHEET NO. D6 |
| DRAWN R.BUDGE | |
| CHECKED R. ANDERSON | |
| PROJECT NO. | SHEET 15 OF 49 |

2/10/25 10:29 NATHANROBINSON C:\USERS\NATHANROBINSON\BOXENG\DESIGN\FISHLAKE\KENTS LAKE CAMPGROUND 2023\DWG\15 D06_KENTS LAKE TENT_PADS.DWG;

## NOTES

1. SET FRACTURED OR SOILED SIDE OF ROCK INTO EARTH. WEATHERED SIDE SHOULD FACE UP.
2. PLACE BARRIER ROCKS SO THEY APPEAR AS NATURAL AVOID PLACING IN LONG ROWS WITH EQUAL SPACING.
3. ROCKS WITHIN CONSTRUCTION AREA FOR SALVAGE AND USE SHALL BE APPROVED BY THE CONTRACTING OFFIER.
4. SEE SPECIFICATION 322205 FOR BARRIER ROCK SIZE.

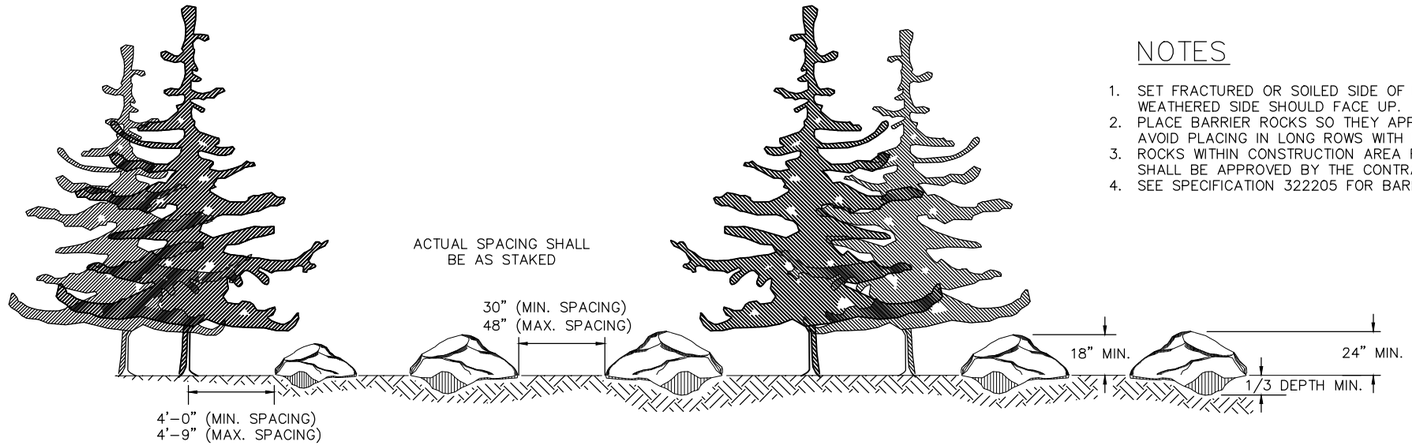


ELEVATION VIEW

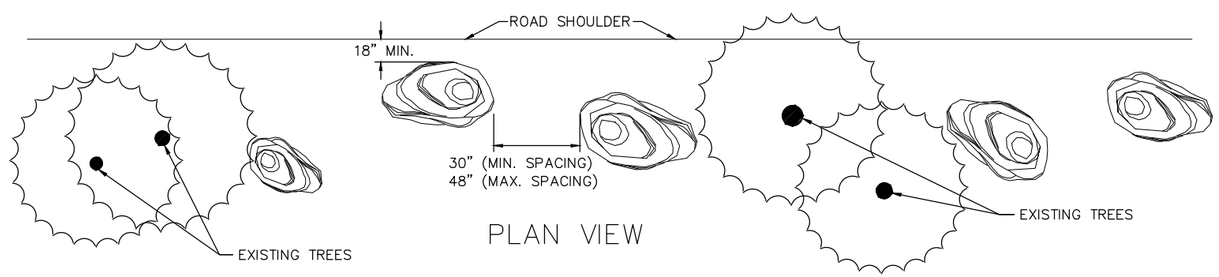


PLAN VIEW

## ROCK BARRIER – DETAIL

(NO SCALE)

NOTES:
1. SEE SPECIFICATION 322622 FOR WHEEL STOP STYLE AND SIZE.
2. INSTALL PER MANUFACTURERS SPECIFICATIONS.

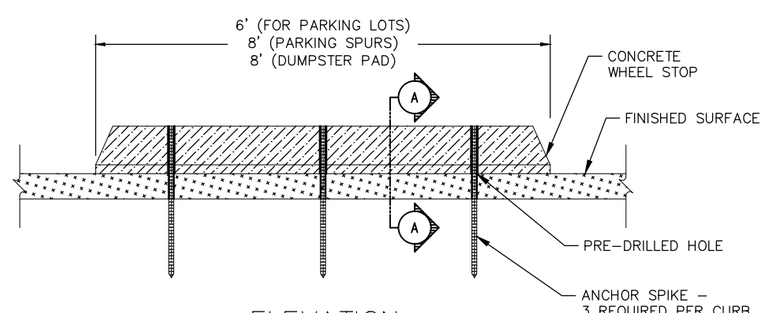


ELEVATION

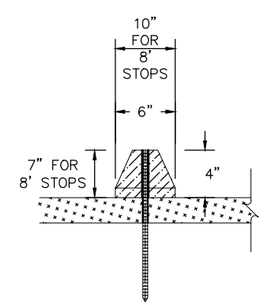


SECTION A–A

## CONCRETE CURB STOP

(NO SCALE)

United States Department of Agriculture
Forest Service

R4
INTERMOUNTAIN REGION

STAMPS, LOGOS, AND SEALS

| NO. | REVISION / ISSUE | DATE |
|---|---|---|
| 4 | | |
| 3 | | |
| 2 | | |
| 1 | | |

PROJECT NAME

**GAOA KENTS LAKE CAMPGROUND RECONSTRUCTION PROJECT**

**FISHLAKE NATIONAL FOREST**

**BEAVER RANGER DISTRICT**

DRAWING TITLE

**BARRIER ROCK AND CURB STOP INSTALLATION DETAILS**

| | |
|---|---|
| DATE 02/15/2024 | ARCHIVE NO. |
| DESIGNER R.BUDGE | DRAWING SHEET NO. D7 |
| DRAWN R.BUDGE | |
| CHECKED R. ANDERSON | |
| PROJECT NO. | SHEET 16 OF 49 |

2/10/26 10:20 NATHANROBINSON C:\USERS\NATHANROBINSON\BOX\ENGDESIGN\FISHLAKE\KENTS.LAKE.CAMPGROUND.2023\DWG\15 D07_KENTS.LAKE.BARRIER_ROCKS_WHEEL_STOP.DWG;

NOTES:
1. STONE WALLS SHALL NOT EXCEED 3 FEET HIGH. CONSTRUCT ADDITIONAL WALLS IN TERRACES WITH A 3 FOOT WIDE TERRACE BETWEEN WALLS IF SLOPE TO BE RETAINED EXCEEDS 3 FEET IN HEIGHT.
2. STONE WALLS SHALL HAVE A MINIMUM 1:3 BATTER TO OFFSET SURCHARGE OF SLOPE.
3. ALL WALL BASE STONES SHALL BE KEYED INTO SOIL 1/3 DEPTH.
4. STONE SHALL BE PURCHASED FROM A COMMERCIAL SOURCE AND SHALL BE BASALT, 2 FOOT MIN. IN THEIR SMALLEST DIMENSION OR AS APPROVED BY THE CONTRACTING OFFICER.
5. CONSTRUCT SWALES AT TOP OF STONE WALLS TO DIVERT RUNOFF AROUND STONE STRUCTURE.

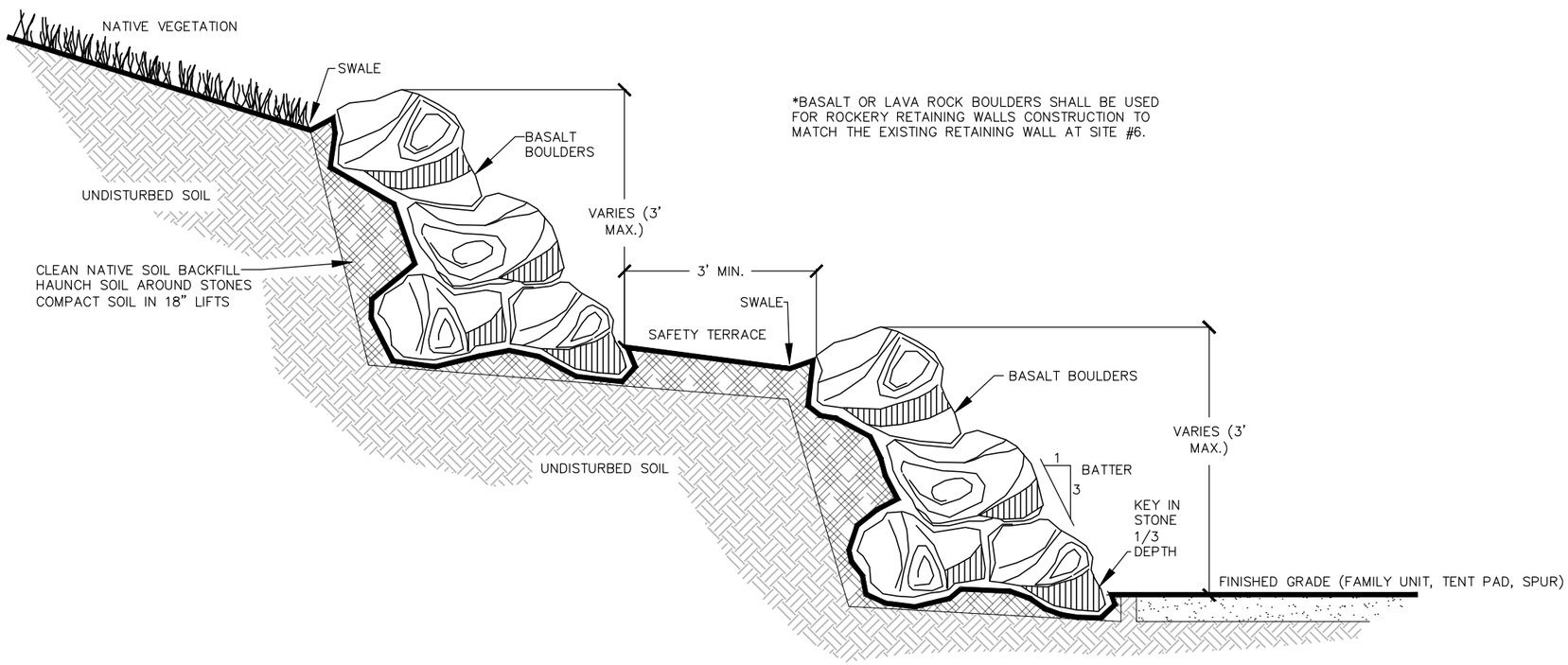


*BASALT OR LAVA ROCK BOULDERS SHALL BE USED FOR ROCKERY RETAINING WALLS CONSTRUCTION TO MATCH THE EXISTING RETAINING WALL AT SITE #6.

ROCKERY RETAINING WALL (SECTION VIEW)
(NO TO SCALE)

United States Department of Agriculture
Forest Service

R4
INTERMOUNTAIN REGION

STAMPS, LOGOS, AND SEALS

| NO. | REVISION / ISSUE | DATE |
|---|---|---|
| 4 | | |
| 3 | | |
| 2 | | |
| 1 | | |

PROJECT NAME
GAOA KENTS LAKE CAMPGROUND RECONSTRUCTION PROJECT

FISHLAKE NATIONAL FOREST

BEAVER RANGER DISTRICT

DRAWING TITLE
ROCKERY RETAINING WALL DETAILS

DATE 02/20/2024
ARCHIVE NO.
DESIGNER R.BUDGE
DRAWN R.BUDGE
CHECKED R. ANDERSON
PROJECT NO.
DRAWING SHEET NO. D8
SHEET 17 OF 49

2/10/26 10:29 NATHANROBINSON C:\USERS\NATHANROBINSONBOXI\ENGDESIGN\FISHLAKE\KENTS LAKE CAMPGROUND 2023\DWG\17 D8_KENTS LAKE ROCKERY RETAINING WALL UPDATED NUMBERING.DWG;

NOTES:
1. ALL SITE FURNISHINGS SHALL BE FURNISHED AND INSTALLED BY THE CONTRACTOR.
2. ALL AGGREGATE BASE AND CONCRETE FOR FAMILY UNITS AND PATHS SHALL BE FURNISHED AND INSTALLED BY THE CONTRACTOR (SEE SPECIFICATION 033000).
3. FAMILY UNITS THAT ARE NOT LOCATED WITHIN 5' OF SPURS SHOULD BE STAKED TO SELF BALANCE (CUTS AND FILLS).

*FAMILY UNITS AT SITES 2, 5, 11, 22, 27, AND 31 SHALL BE CONCRETE PADS WITH TOOLED EDGE HEADER (CONTRACTOR SHALL PROPOSE SCORELINE AND EXPANSION JOINT LAYOUT PLAN FOR APPROVAL).

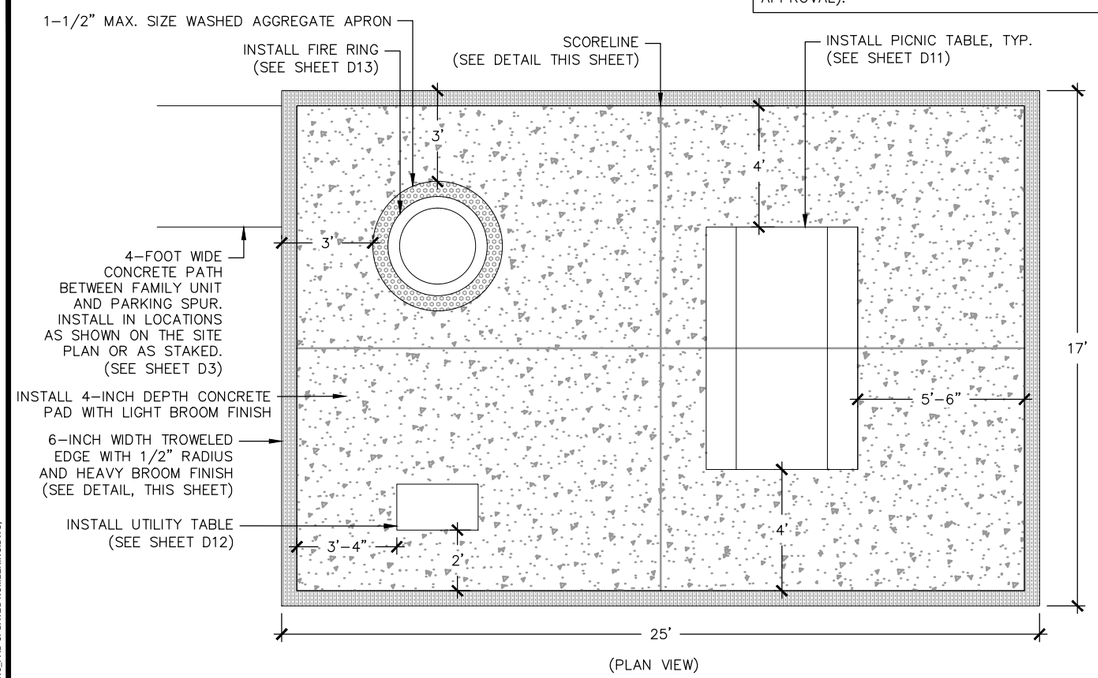


(PLAN VIEW)

## SINGLE FAMILY UNIT – CONCRETE PAD

(NO SCALE)

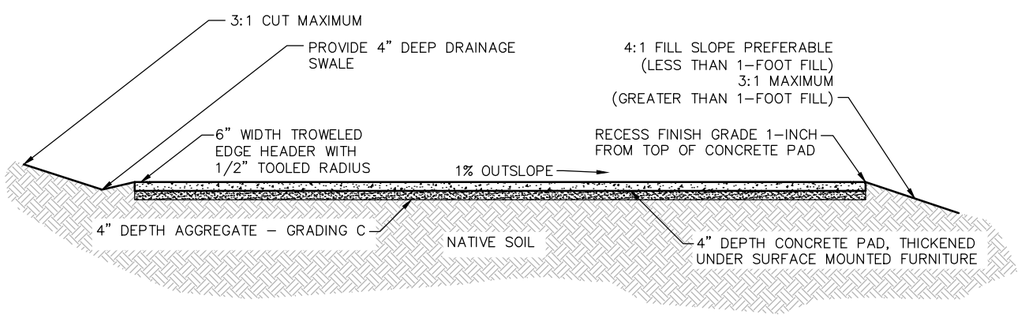


## TYPICAL CONCRETE SURFACE FAMILY UNIT CUT AND FILL (NO SCALE)

(SECTION VIEW)

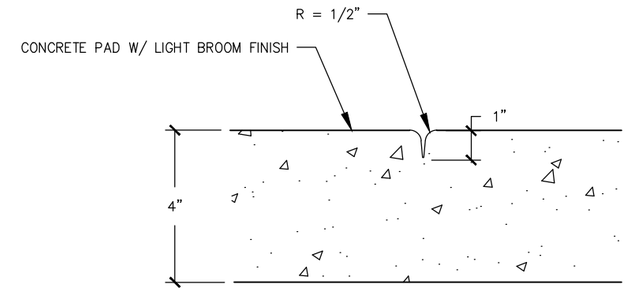


(HAND TOOLED SCORELINE AND CONTRACTION JOINTS – SECTION VIEW)

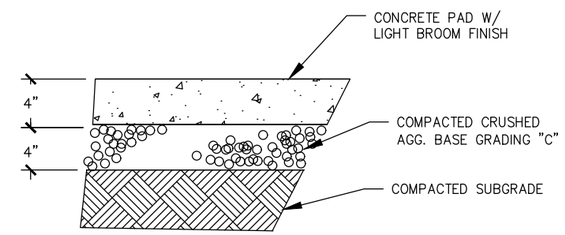


(TYPICAL PAD AND SIDEWALK – SECTION VIEW)

## CONCRETE DETAILS (NO SCALE)

GENERAL NOTES:

1. INSTALL 1/2" COMPRESSED FELT EXPANSION JOINT WHEN POURING OPERATIONS ARE SUSPENDED FOR ONE HOUR OR MORE.
2. THE CONTRACTOR SHALL SUBMIT AN EXPANSION AND CONTRACTION CONCRETE JOINT PLAN TO THE CONTRACTING OFFICER FOR APPROVAL.
3. SEE SPECIFICATION 033000.

United States Department of Agriculture
Forest Service

R4
INTERMOUNTAIN REGION

STAMPS, LOGOS, AND SEALS

| NO. | REVISION / ISSUE | DATE |
|---|---|---|
| 4 | | |
| 3 | | |
| 2 | | |
| 1 | | |

PROJECT NAME

**GAOA KENTS LAKE CAMPGROUND RECONSTRUCTION PROJECT**

**FISHLAKE NATIONAL FOREST**

**BEAVER RANGER DISTRICT**

DRAWING TITLE

**FAMILY UNITS AND CONCRETE PAD LAYOUT DETAILS**

| | |
|---|---|
| DATE 02/03/2024 | ARCHIVE NO. |
| DESIGNER R.BUDGE | DRAWING SHEET NO. D9 |
| DRAWN R.BUDGE | |
| CHECKED R. ANDERSON | |
| PROJECT NO. | SHEET 18 OF 49 |

2/10/26 10:29 NATHANROBINSON C:\USERS\NATHANROBINSON\BOXENG\DESIGN\FISHLAKE\KENTS LAKE CAMPGROUND 2023\DWG\18 D9_KENTS LAKE FAMILY UNITS_CONC PAD UPDATED NUMBERING.DWG;

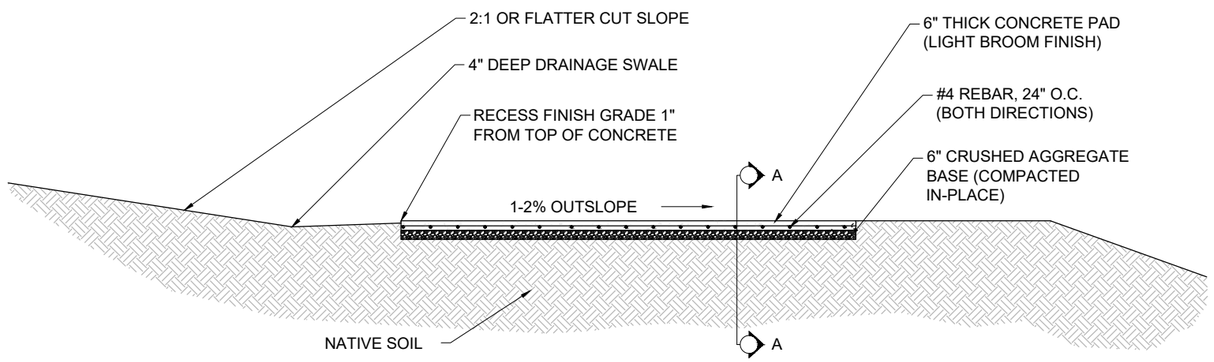


## CONCRETE PAD SECTION WITH CUT AND FILL (TYP)

NOT TO SCALE

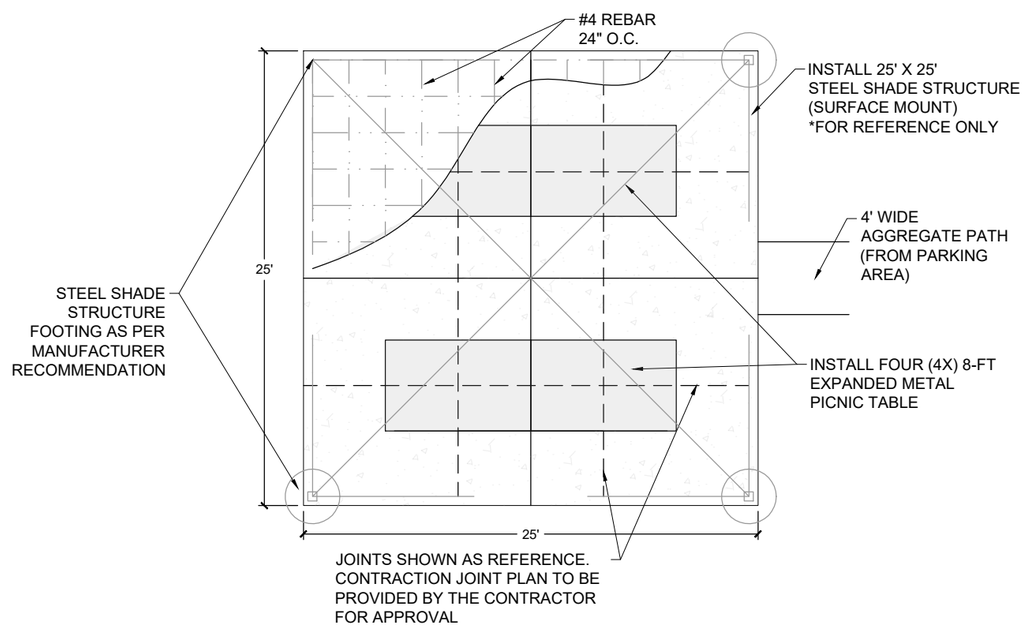


## CONCRETE SLAB LAYOUT

NOT TO SCALE

## NOTES

1. INSTALL $\frac{1}{2}$" COMPRESSED FELT EXPANSION JOINT WHEN POURING OPERATIONS ARE SUSPENDED FOR ONE HOUR OR MORE.
2. CONCRETE PADS SHALL BE SLOPED AT 1% IN ONE DIRECTION TO DRAIN.
3. CONCRETE PAD SHALL BE 6" THICK.
4. TABLE ANCHORS SHALL BE NO CLOSER THAN 12" FROM CONTRACTION JOINT.
5. JOINT SPACING PLAN SHALL BE PROVIDED BY THE CONTRACTOR AND APPROVED BY THE CONTRACTING OFFICER REPRESENTATIVE'.
6. ALL JOINTS ARE TO BE TOOLED, NOT SAWCUT.
7. REBAR NOT SHOWN IN HAND TOOLED DETAIL

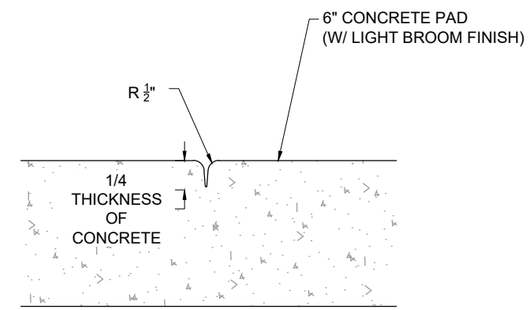


## HAND TOOLED CONTRACTION JOINT

NOT TO SCALE

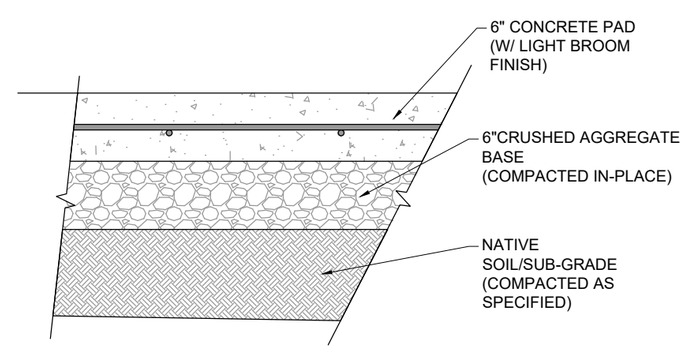


## SECTION A-A

NOT TO SCALE

United States Department of Agriculture
Forest Service

**REGION 04**
INTERMOUNTAIN REGION

STAMPS, LOGOS, AND SEALS

| NO. | REVISION / ISSUE | DATE |
|---|---|---|
| 4 | | |
| 3 | | |
| 2 | | |
| 1 | | |

PROJECT NAME

**GAOA KENTS LAKE CAMPGROUND RECONSTRUCTION PROJECT**

**FISHLAKE NATIONAL FOREST**

**BEAVER RANGER DISTRICT**

DRAWING TITLE

**DAY USE AREA - PICNIC AREA LAYOUT**

| | |
|---|---|
| DATE 12/13/2024 | ARCHIVE NO. |
| DESIGNER J. REDHOUSE | DRAWING SHEET NO. D10 |
| DRAWN J. REDHOUSE | |
| CHECKED S. RODRIGUEZ | |
| PROJECT NO. | SHEET 19 OF 49 |

4/30/26 15:37 NATHANROBINSON C:\USERS\NATHANROBINSON\BOXENGDESIGN\FISHLAKE\KENTS.LAKE.CAMPGROUND.2023\DWG\19 D10_KENTSLAKE DAY USE PICNIC AREA.DWG;

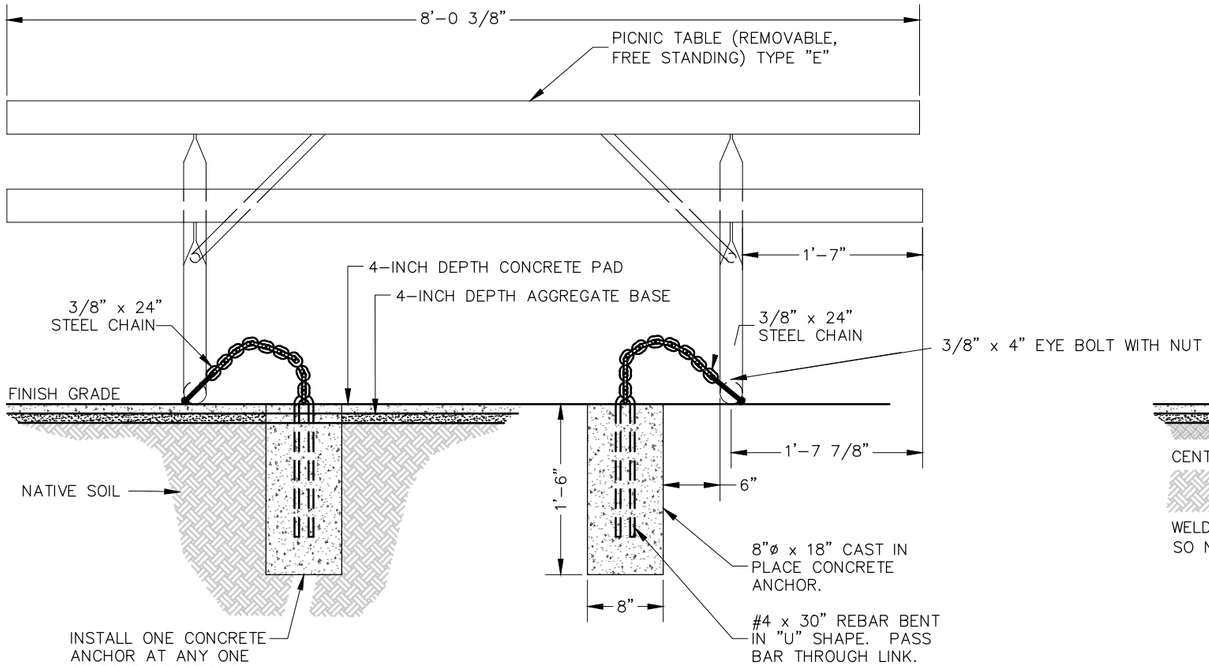


SIDE SECTION-VIEW (NO SCALE)

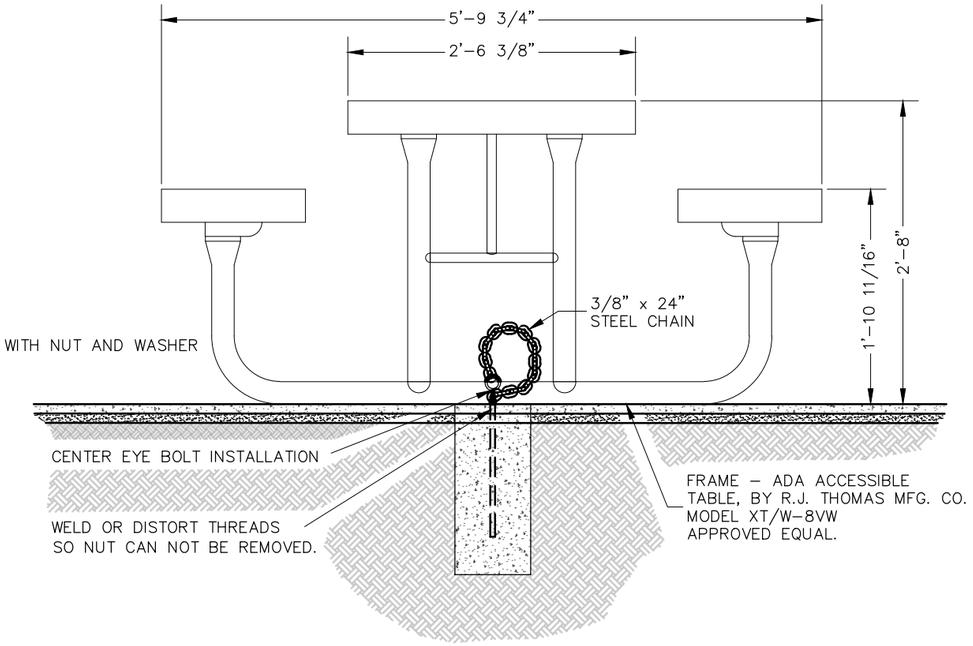


END SECTION-VIEW (NO SCALE)

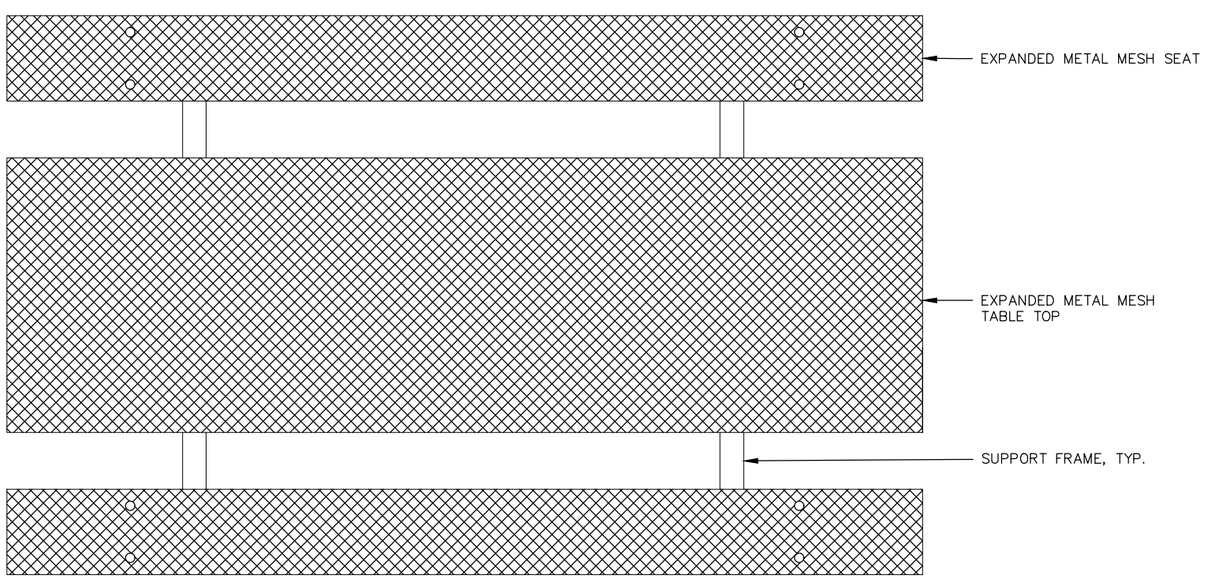


PLAN VIEW (NO SCALE)

NOTES:

1. UNLESS OTHERWISE SPECIFIED, ALL DIMENSIONS ARE PER ANSI Y14.5M-1982.
2. UNLESS OTHERWISE SPECIFIED, ALL DIMENSIONS ARE IN INCHES.
3. DO NOT SCALE DRAWING.
4. THE CHAIN SHALL BE INSTALLED SO IT LAYS WITH FINISH GRADE.
5. TABLE MODEL XT/CW-8VW IS A SPECIAL TABLE MANUFACTURED FOR THE FOREST SERVICE. THE CONTRACTOR SHALL BE RESPONSIBLE TO CONTACT THE SPECIFIED MANUFACTURER TO HAVE THE TABLE MANUFACTURED IN ACCORDANCE WITH R.J. THOMAS MFG. CO.

United States Department of Agriculture
Forest Service

R4
INTERMOUNTAIN REGION

STAMPS, LOGOS, AND SEALS

| NO. | REVISION / ISSUE | DATE |
|---|---|---|
| 4 | | |
| 3 | | |
| 2 | | |
| 1 | | |

PROJECT NAME

**GAOA KENTS LAKE CAMPGROUND RECONSTRUCTION PROJECT**

**FISHLAKE NATIONAL FOREST**

**BEAVER RANGER DISTRICT**

DRAWING TITLE

**8-FOOT EXPANDED METAL PICNIC TABLE (CONCRETE PAD)**

| | |
|---|---|
| DATE 02/03/2024 | ARCHIVE NO. |
| DESIGNER R.BUDGE | DRAWING SHEET NO. D11 |
| DRAWN R.BUDGE | |
| CHECKED R. ANDERSON | |
| PROJECT NO. | SHEET 20 OF 49 |

2/10/26 10:29 NATHANROBINSON C:\USERS\NATHANROBINSON\BOXENG\DESIGN\FISHLAKE\KENTS LAKE CAMPGROUND 2023\DWG\20 D11_KENTS LAKE EXPANDED METAL MESH MOVABLE TABLE CONCRETE PAD UPDATED NUMBERING.DWG;

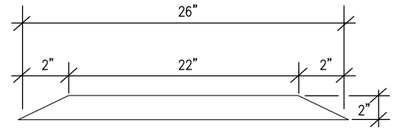


TABLE TOP SIDE FIN

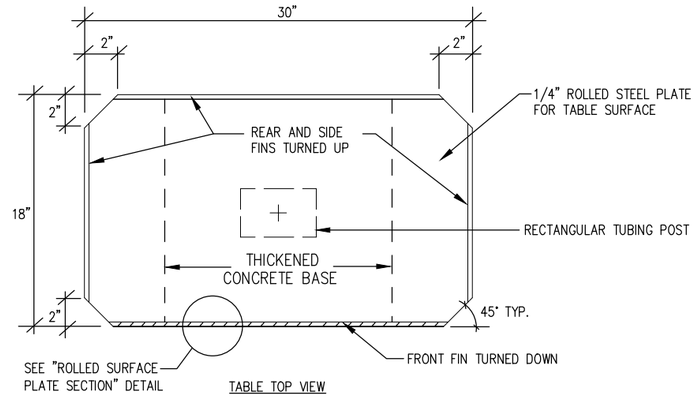


TABLE TOP VIEW

NOTE:

TURN DOWN FRONT FIN AND TURN UP BACK & SIDE FINS @ 90 DEGREED FROM TABLE SURFACE

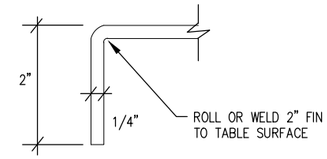


TABLE ROLLED SURFACE PLATE SECTION

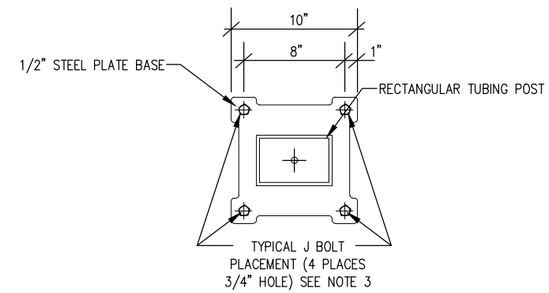


TABLE BASE PLATE

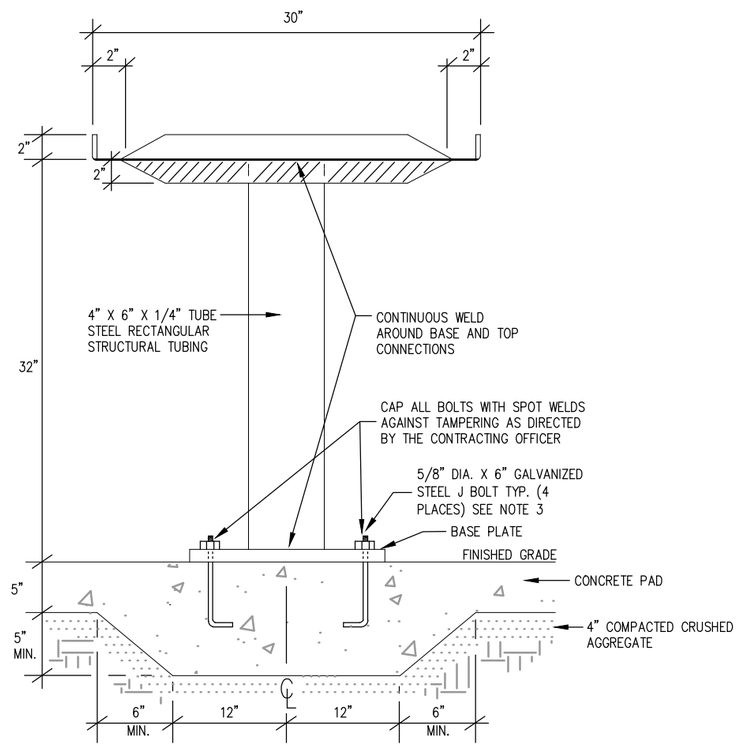


TABLE SIDE VIEW & BASE INSTALLATION
(SECTION VIEW)

NOTES:

1. SPURS AND SHARP EDGES SHALL BE GROUND SMOOTH
2. ALL SURFACES SHALL BE POWDER COATED WITH HEAT RESISTANT STOVE BLACK PAINT
3. 5/8" DIA. J BOLT MAY BE SUBSTITUTED FOR A 5/8" X 6" STAINLESS STEEL TAPER BOLT OR STUD ANCHORS
4. BASE PLATE DIMENSIONS SHALL BE VERIFIED WITH THE MANUFACTURER PRIOR TO BOLT PLACEMENT
5. UTILITY TABLES SHALL BE PILOT ROCK MODELS: UTL/P/B-1 (18" X 30") AS MANUFACTURED BY THE R.J. THOMAS MFG. CO. INC., CHEROKEE, IOWA

   PHONE: 1-800-762-5002,
   WEBSITE: WWW.PILOTROCK.COM
6. UTILITY TABLES SHALL BE GOVERNMENT FURNISHED AND INSTALLED BY THE CONTRACTOR. THE CONTRACTOR SHALL PROVIDE ALL BOLTS AND ANCHORING MECHANISMS NECESSARY TO COMPLETE THE INSTALLATION. INSTALL IN LOCATION AS SHOWN ON SHEET D1.

# FAMILY UNIT UTILITY TABLE

(NO SCALE)

United States Department of Agriculture
Forest Service

R4
INTERMOUNTAIN REGION

STAMPS, LOGOS, AND SEALS

| NO. | REVISION / ISSUE | DATE |
|---|---|---|
| 4 | | |
| 3 | | |
| 2 | | |
| 1 | | |

PROJECT NAME

**GAOA KENTS LAKE CAMPGROUND RECONSTRUCTION PROJECT**

**FISHLAKE NATIONAL FOREST**

**BEAVER RANGER DISTRICT**

DRAWING TITLE

**UTILITY TABLE DETAILS (SURFACE MOUNT)**

| | |
|---|---|
| DATE 02/20/2024 | ARCHIVE NO. |
| DESIGNER R.BUDGE | DRAWING SHEET NO. D12 |
| DRAWN R.BUDGE | |
| CHECKED R. ANDERSON | |
| PROJECT NO. | SHEET 21 OF 49 |

2/10/26 10:29 NATHANROBINSON C:\USERS\NATHANROBINSON\BOXE\ENGDESIGN\FISHLAKE\KENTS LAKE CAMPGROUND 2023\DWG\21D12_KENTS LAKE UTILITY TABLE SURFACE MOUNT CONCRETE PAD UPDATED NUMBERING.DWG;

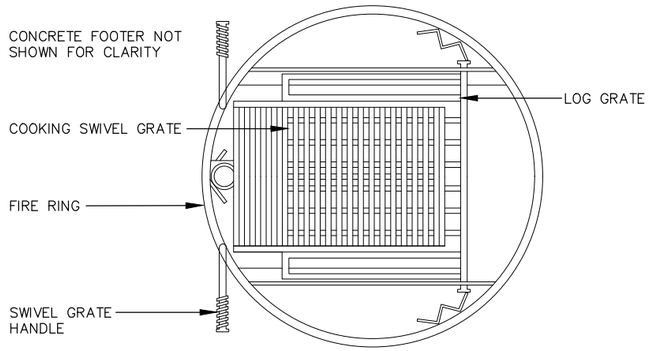


PLAN VIEW

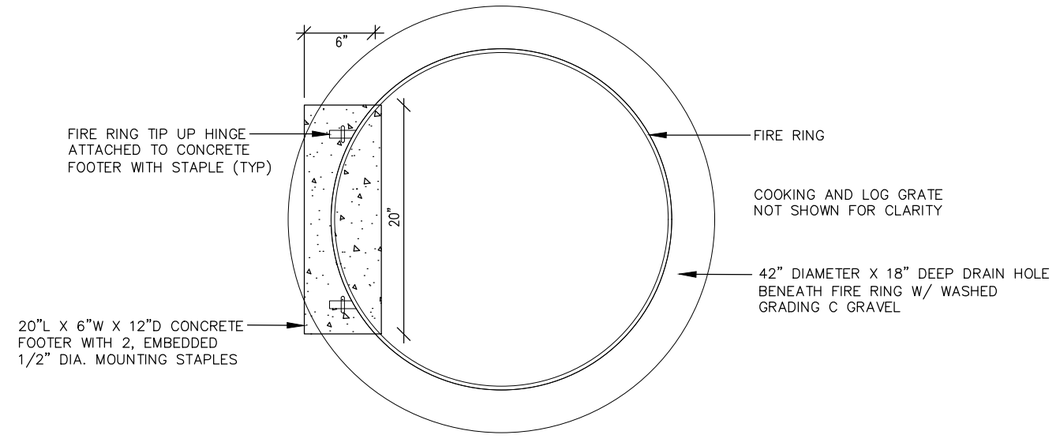


PLAN VIEW

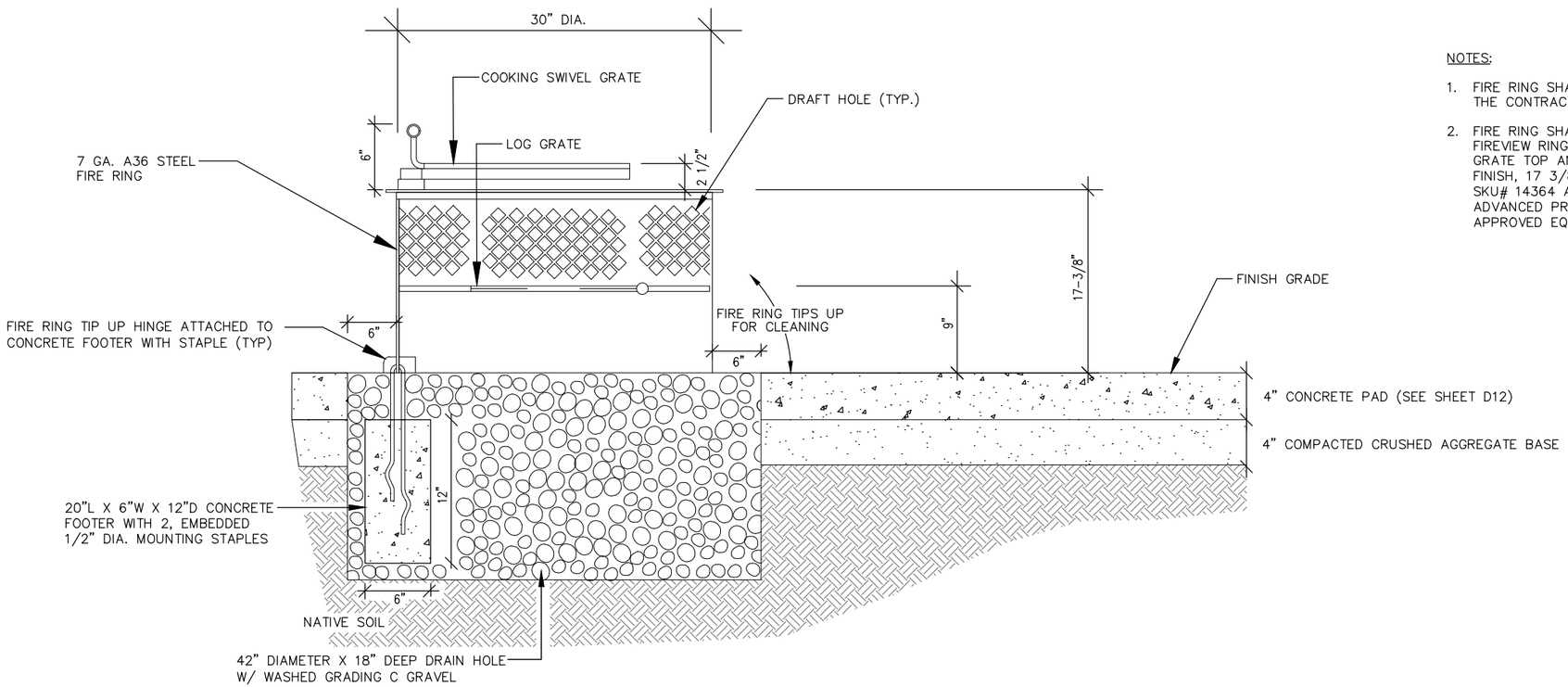


SECTION VIEW

NOTES:

1. FIRE RING SHALL BE FURNISHED AND INSTALLED BY THE CONTRACTOR.
2. FIRE RING SHALL BE MODEL: JAMESTOWN 30 INCH FIREVIEW RING WITH 290 SQUARE INCH SWIVEL COOKING GRATE TOP AND LOG GRATE, BLACK POWDER COAT FINISH, 17 3/8 INCHES HIGH WITH MOUNTING STAPLES. SKU# 14364 AS MANUFACTURED BY JAMESTOWN ADVANCED PRODUCTS. PHONE (800) 452-0639 OR AN APPROVED EQUAL.

United States Department of Agriculture
Forest Service

R4
INTERMOUNTAIN REGION

STAMPS, LOGOS, AND SEALS

| NO. | REVISION / ISSUE | DATE |
|---|---|---|
| 4 | | |
| 3 | | |
| 2 | | |
| 1 | | |

PROJECT NAME

**GAOA KENTS LAKE CAMPGROUND RECONSTRUCTION PROJECT**

**FISHLAKE NATIONAL FOREST**

**BEAVER RANGER DISTRICT**

DRAWING TITLE

**METAL FIRE RING DETAILS (CONCRETE PAD)**

| | |
|---|---|
| DATE 02/20/2024 | ARCHIVE NO. |
| DESIGNER R.BUDGE | DRAWING SHEET NO. D13 |
| DRAWN R.BUDGE | |
| CHECKED R. ANDERSON | |
| PROJECT NO. | SHEET 22 OF 49 |

2/10/26 10:25 NATHANROBINSON C:\USERS\NATHANROBINSON\BOXENGDESIGN\FISHLAKE\KENTS LAKE CAMPGROUND 2023\DWG\22 D13_KENTS LAKE METAL_FIRE_RING_FOR_FAMILY_UNITS_CONC_PAD.DWG;

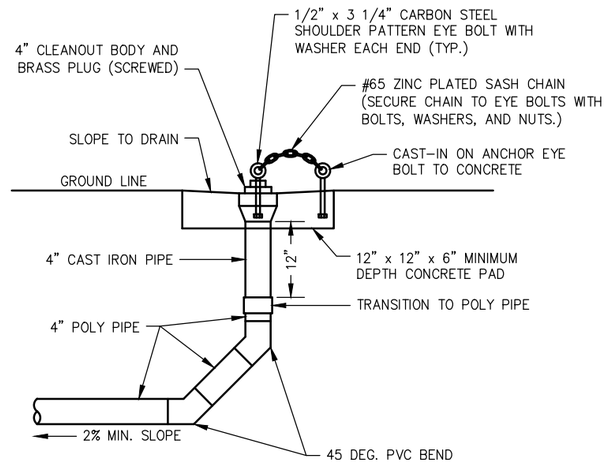


## TRAILER SEWER SERVICE HOOKUP

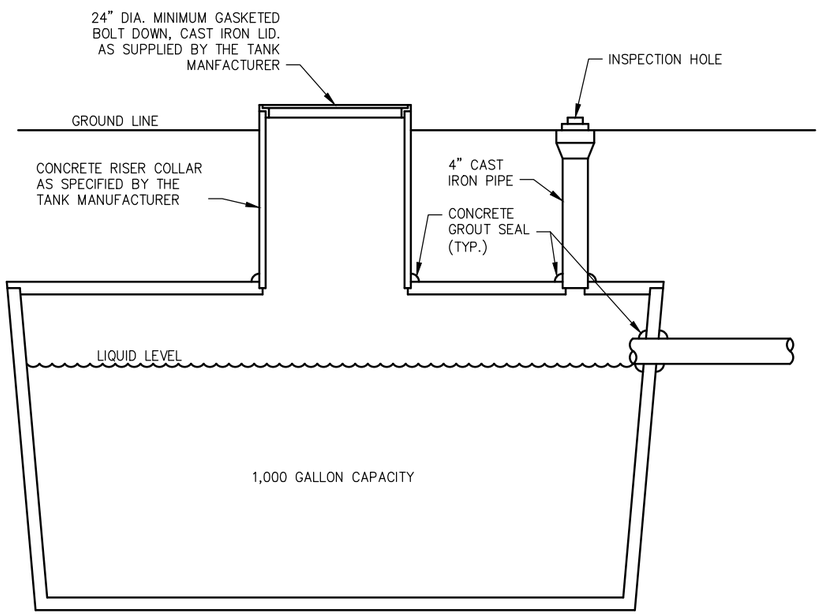


### SEWAGE HOLDING TANK NOTES:

1. TANK MUST BE AT LEAST 50 FEET FROM ALL WATER BODIES. TANK AND SEWERLINE MUST BE AT LEAST 10 FEET FROM ALL POTABLE WATERLINES.
2. THE HOLDING TANK SHALL BE 1000 GALLON MINIMUM SIZE CONFORMING TO THE U.S. PUBLIC HEALTH SERVICE STANDARDS AS STATED IN PUBLIC HEALTH SERVICE PUBLICATION NO. 526, MANUAL OF SEPTIC TANK PRACTICE; AND TO STATE HEALTH AND SAFETY REQUIRMENTS.
3. TANK SHALL BE WATERTIGHT SO AS TO SERVE AS A SEWAGE HOLDING VAULT FOR THE HOST UNIT.
4. FURNISH AND INSTALL A GAS-TIGHT ADAPTER FOR CONNECTING THE TRAILER DRAIN PIPE TO CLEANOUT BODY.
5. SEWERLINE SHALL BE SLOPED A MINIMUM 2% TO DRAIN TOWARDS TANK. INSTALL SEWERLINE AT A CONSTANT GRADE.
6. BURY SEWERLINE A MINIMUM OF 18 INCHES (MIN. 30 INCHES REQUIRED UNDER ROADWAYS).

## SEWAGE HOLDING TANK (NOT TO SCALE)

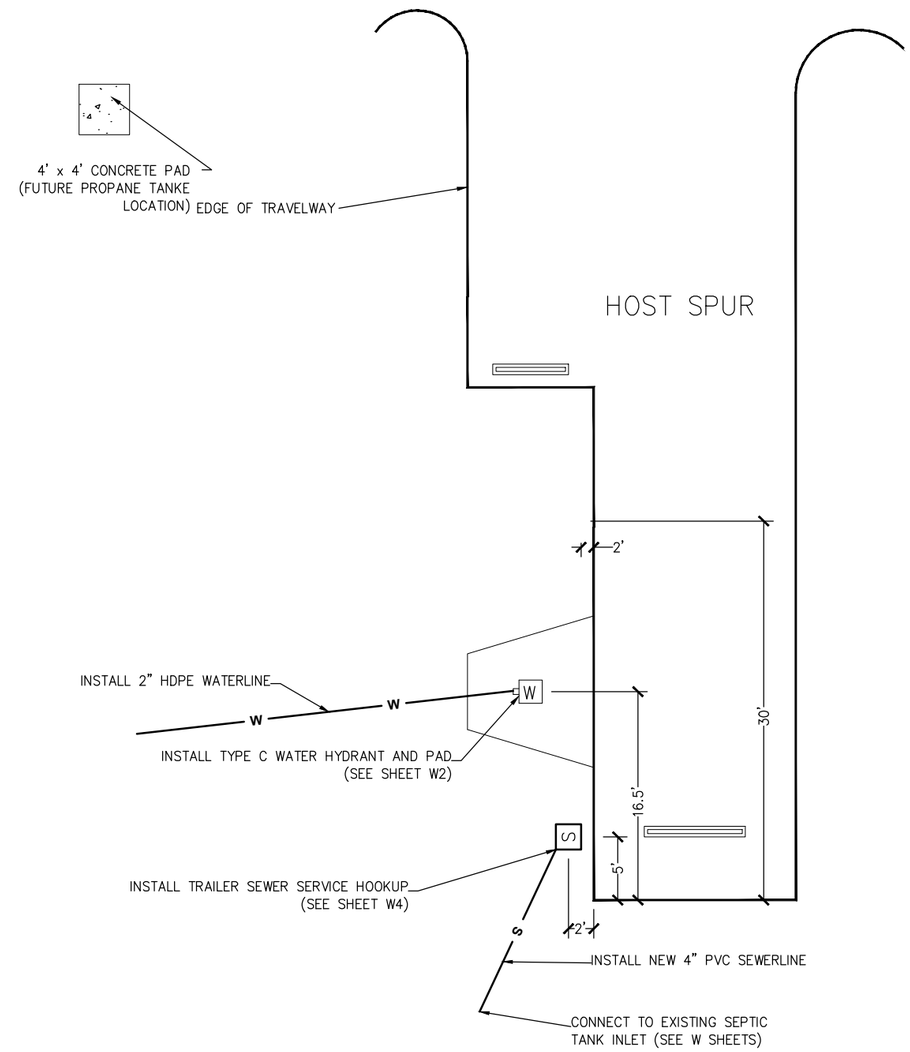


NOTE:

1. EXACT LOCATION OF UTILITY CONNECTIONS SHALL BE AS SHOWN ON THE SITE PLAN AND AS STAKED BY THE CONTRACTOR AND APPROVED BY THE CONTRACTING OFFICER.

## HOST UNIT UTILITY PLAN

(NOT TO SCALE)

United States Department of Agriculture
Forest Service

R4
INTERMOUNTAIN REGION

STAMPS, LOGOS, AND SEALS

| NO. | REVISION / ISSUE | DATE |
|---|---|---|
| 4 | | |
| 3 | | |
| 2 | | |
| 1 | | |

PROJECT NAME

**GAOA KENTS LAKE CAMPGROUND RECONSTRUCTION PROJECT**

**FISHLAKE NATIONAL FOREST**

**BEAVER RANGER DISTRICT**

DRAWING TITLE

**HOST UNIT UTILITY LAYOUT**

| | |
|---|---|
| DATE 02/20/2024 | ARCHIVE NO. |
| DESIGNER R.BUDGE | DRAWING SHEET NO. D14 |
| DRAWN R.BUDGE | |
| CHECKED R. ANDERSON | |
| PROJECT NO. | SHEET 23 OF 49 |

2/10/26 10:29 NATHANROBINSON C:\USERS\NATHANROBINSON\BOX\ENGDESIGN\FISHLAKE\KENTS.LAKE.CAMPGROUND.2023\DWG\23 D14_KENTS.LAKE.HOSTUNITUTILITYLAYOUT.DWG;

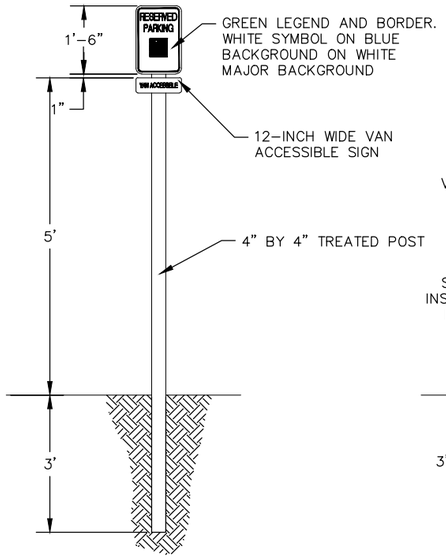


ACCESSIBLE PARKING SIGNS

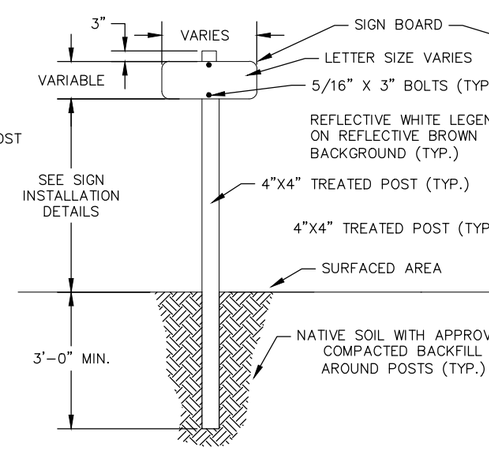


SINGLE POST SIGNS

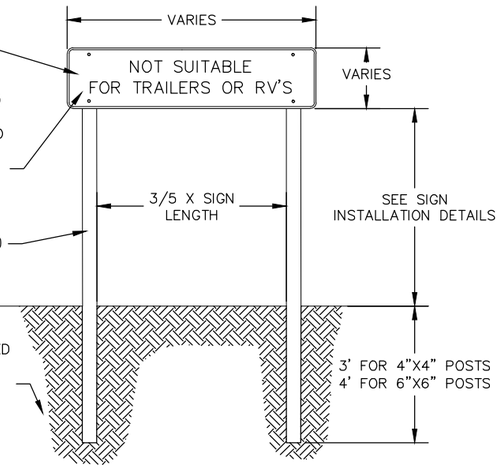


DOUBLE POST SIGNS

## SIGN LIST

SINGLE POST SIGNS (4"X4" POSTS)

| | DESCRIPTION | SIGN # (SIZE) | QUANTITY | SIGN MATERIAL | COLOR | LETTER SIZE (IN) |
|---|---|---|---|---|---|---|
| SIGN #1 | STOP SIGN | R–1–24 | 2 | ALUMINUM | WHITE ON RED | |
| SIGN #2 | ACCESSIBLE PARKING W/ PLAQUE | R7–8 (12X18) R7–8A (6X12) | 4 | ALUMINUM | GREEN/BLUE ON WHITE | |
| SIGN #3 | DO NOT ENTER | R5–1–24 | 1 | ALUMINUM | WHITE ON RED | |
| SIGN #4 | ONE WAY ⇦ | R6–2 (18X24) | 1 | ALUMINUM | BLACK ON WHITE | |
| SIGN #5 | 15 MINUTE PARKING | FRD–2–4 | 5 | ALUMINUM | WHITE ON BROWN | 4 |
| SIGN #6 | ⇦ EXIT | FRD–1–4 | 1 | ALUMINUM | WHITE ON BROWN | 4 |
| SIGN #7 | CAMPGROUND HOST | FRD–2–4 | 1 | ALUMINUM | RED ON WHITE | 4 |
| SIGN #8 | NOT SUITABLE FOR TRAILERS, RV'S OR BUSES | FRD–3–4 | 1 | ALUMINUM | WHITE ON BROWN | 4 |

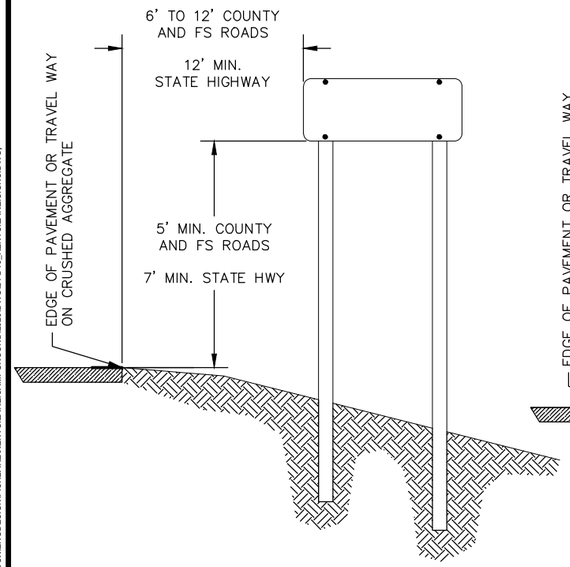


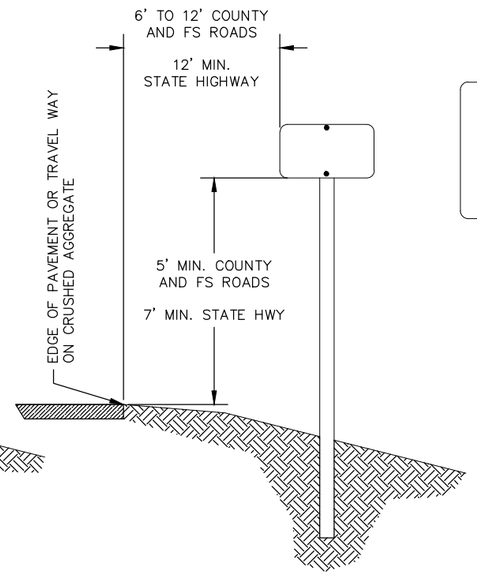


SIGN INSTALLATION DETAILS

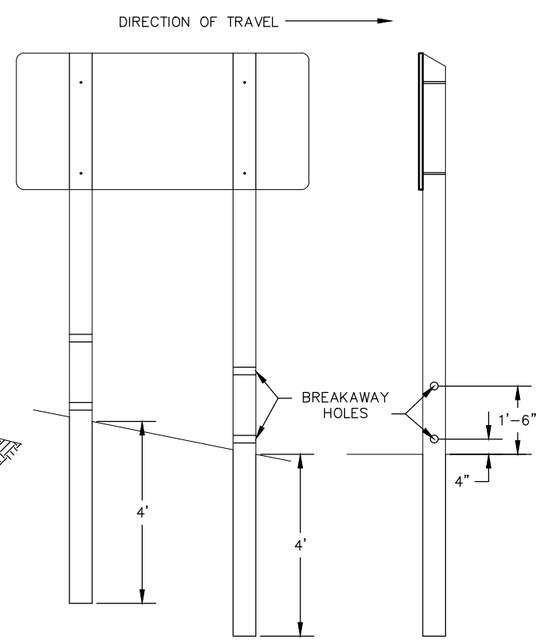


*FIELD DRILL HOLES AND TREAT WITH PRESERVATIVES.
**WOOD POSTS LARGER THAN 4"X4" OR A CROSS SECTIONAL AREA OF 24 SQUARE INCHES OR GREATER REQUIRE BREAKAWAY POSTS.

WOOD BREAKAWAY POST DETAILS

NOTES:

1. SEE EM 7100–15 MANUAL FOR FRD SIGN LAYOUT REQUIREMENTS.
2. ALL SIGN BOARDS INSTALLED ON SINGLE POSTS SHALL BE CENTERED.
3. DIMENSIONS FOR SIGN INSTALLATION ARE SCHEMATIC.
4. SEE SPECIFICATION 101400 FOR SIGN POST AND MATERIALS.
5. ALL SIGNS SHALL BE INSTALLED USING VANDAL RESISTANT BOLTS AND NUTS.
6. INSTALLATION DATE AND VANDAL WARNING LABELS SHALL BE INSTALLED ON ALL SIGNS IN ACCORDANCE WITH FS MANUAL EM 7100–15.
7. ALL SIGNS SHALL MEET MUTCD AND FOREST SERVICE STANDARDS.
8. CLEAR VEGETATION AS NEEDED TO MAINTAIN VISIBILITY OF SIGNS. CLEARING SHALL BE HANDLED IN ACCORDANCE WITH SPECIFICATION 311000.
9. ALL SIGNS SHALL BE INSTALLED ON A WOOD POST UNLESS OTHERWISE NOTED.
10. THE BACK OF ALL SIGNS SHALL BE PAINTED OR POWDER COAT BROWN.
11. ALL SIGNS SHALL BE ALUMINUM.

United States Department of Agriculture
Forest Service

R4
INTERMOUNTAIN REGION

STAMPS, LOGOS, AND SEALS

| NO. | REVISION / ISSUE | DATE |
|---|---|---|
| 4 | | |
| 3 | | |
| 2 | | |
| 1 | | |

PROJECT NAME

**GAOA KENTS LAKE CAMPGROUND RECONSTRUCTION PROJECT**

**FISHLAKE NATIONAL FOREST**

**BEAVER RANGER DISTRICT**

DRAWING TITLE

**SIGN LIST AND INSTALLATION DETAILS**

| | |
|---|---|
| DATE 02/20/2024 | ARCHIVE NO. |
| DESIGNER R.BUDGE | DRAWING SHEET NO. D15 |
| DRAWN R.BUDGE | |
| CHECKED R. ANDERSON | |
| PROJECT NO. | SHEET 24 OF 49 |

2/10/26 10:29 NATHANROBINSON C:\USERS\NATHANROBINSON\BOXENGDESIGN\FISHLAKE\KENTS.LAKE.CAMPGROUND.2023\DWG\24 D15_KENTS.LAKE.SIGNS.DWG;

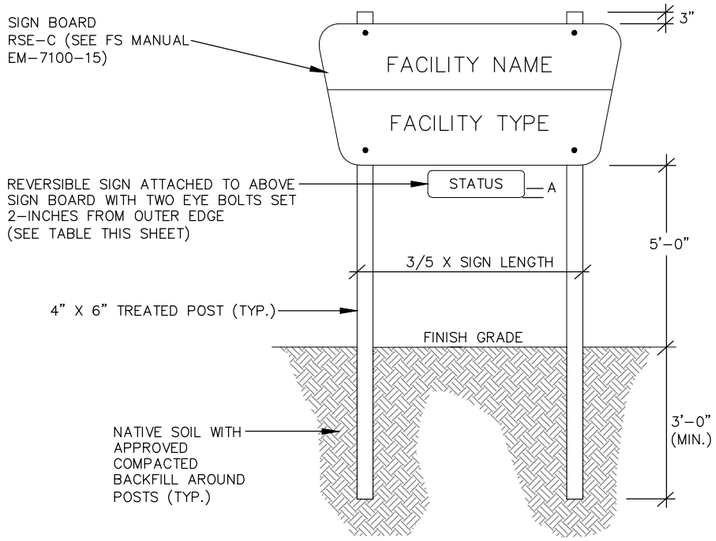


## MINOR SITE ID SIGN

(REQUIRES DOUBLE 4" X 6" POST BASE)

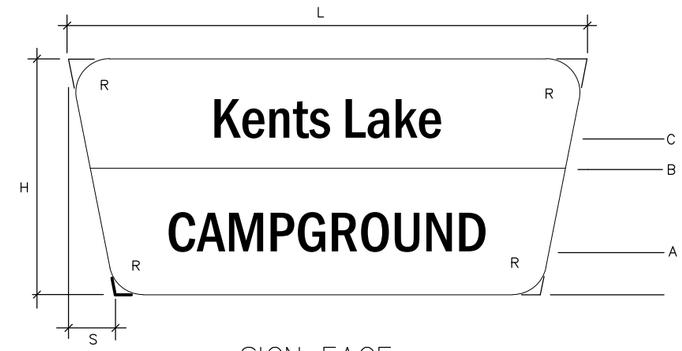


## SIGN FACE

HDPE SIGN

TOP LEGEND
BROWN LETTERS (#20059)
ON YELLOW–CREAM
(#23695) BACKGROUND

BOTTOM LEGEND
YELLOW–CREAM LETTERS
(#23695) ON BROWN
(#20059) BACKGROUND

NOTES:

1. DIMENSIONS FOR SIGN INSTALLATION ARE SCHEMATIC.
2. SIGNS WILL BE LOCATED BY THE CONTRACTING OFFICER.
3. SEE SPECIFICATION 101415 FOR SIGN SUBSTRATE AND 101400 FOR SIGN POST MATERIALS.
4. ALL SIGNS SHALL BE INSTALLED USING VANDAL RESISTANT BOLTS AND NUTS.
5. ALL SIGNS SHALL BE IN ACCORDANCE WITH FS MANUAL EM 7100–15 CHAPTER 7B.

MINOR SITE ID SIGN RSE–C TABLE

| SHEET | SIGN PANEL TEXT | | | | PANEL DIMENSIONS (INCHES) | | | | LAYOUT DIMENSIONS MEASURED FROM BOTTOM OF PANEL (INCHES) | | | | | LETTER SIZE (INCHES) | | | MATERIAL |
|---|---|---|---|---|---|---|---|---|---|---|---|---|---|---|---|---|---|
| | STATUS (REVERSIBLE) | | FACILITY NAME (UPPER PANEL) | FACILITY TYPE (LOWER PANEL) | H | L | R | S | A | B | C | D | E | FACILITY NAME ASA SERIES D (INITIAL CAPS LOWER CASE) | FACILITY TYPE ASA SERIES D (UPPER CASE) | FACILITY STATUS (UPPER CASE) | |
| S3 | FRONT OPEN | BACK FULL | KENTS LAKE | CAMPGROUND | 24 | 60 | 4 | 4¾ | 5 | 13 | 16¼ | N/A | N/A | 5 | 5 | N/A | HDPE |

## SITE IDENTIFICATION SIGN LAYOUT

USDA
United States Department of Agriculture
Forest Service

R4
INTERMOUNTAIN REGION

STAMPS, LOGOS, AND SEALS

| NO. | REVISION / ISSUE | DATE |
|---|---|---|
| 4 | | |
| 3 | | |
| 2 | | |
| 1 | | |

PROJECT NAME

**GAOA KENTS LAKE CAMPGROUND RECONSTRUCTION PROJECT**

**FISHLAKE NATIONAL FOREST**

**BEAVER RANGER DISTRICT**

DRAWING TITLE

**MINOR SITE IDENTIFICATION SIGN DETAILS (RSE)**

DATE 02/03/2024
ARCHIVE NO.
DESIGNER R.BUDGE
DRAWN R.BUDGE
CHECKED R. ANDERSON
PROJECT NO.
DRAWING SHEET NO. D16
SHEET 25 OF 49

2/10/26 10:30 NATHANROBINSON C:\USERS\NATHANROBINSON\BOXEN\GDESIGN\FISHLAKE\KENTS LAKE CAMPGROUND.2023\DWG\25 D16_KENTS LAKE SITE_IDENTIFICATION_MINOR_RSE.DWG;

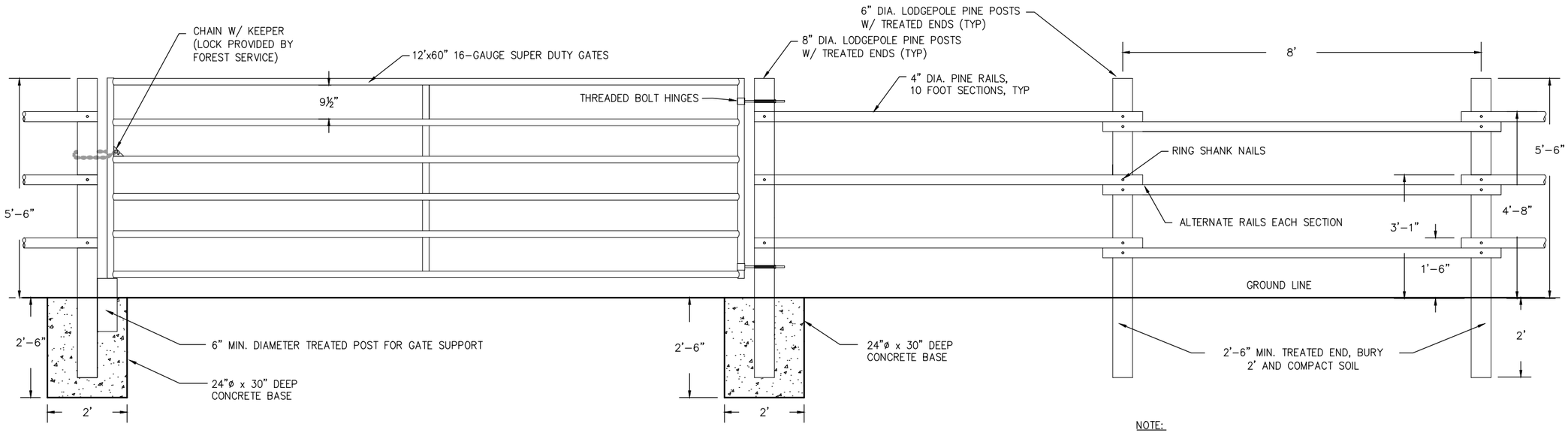


## POST AND RAIL FENCE AND STOCK GATE

NOT TO SCALE

NOTE:

1. RAILS WILL NEED TO BE PRE-DRILLED TO ACCEPT RING SHANK NAILS.

United States Department of Agriculture
Forest Service

**R4**

**INTERMOUNTAIN REGION**

STAMPS, LOGOS, AND SEALS

| NO. | REVISION / ISSUE | DATE |
|---|---|---|
| 4 | | |
| 3 | | |
| 2 | | |
| 1 | | |

PROJECT NAME

**GAOA KENTS LAKE CAMPGROUND RECONSTRUCTION PROJECT**

**FISHLAKE NATIONAL FOREST**

**BEAVER RANGER DISTRICT**

DRAWING TITLE

**POST & POLE FENCE AND STOCK FENCE - REINSTALLATION DETAIL**

| | |
|---|---|
| DATE 03/21/2025 | ARCHIVE NO. |
| DESIGNER J. REDHOUSE | DRAWING SHEET NO. D17 |
| DRAWN J. REDHOUSE | |
| CHECKED R. ANDERSON | |
| PROJECT NO. | SHEET 26 OF 47 |

4/30/26 15:37 NATHANROBINSON C:\USERS\NATHANROBINSON\BOX\ENGDESIGN\FISHLAKE\KENTS LAKE CAMPGROUND 2023\DWG\26 D17_POST AND POLE FENCE.DWG;

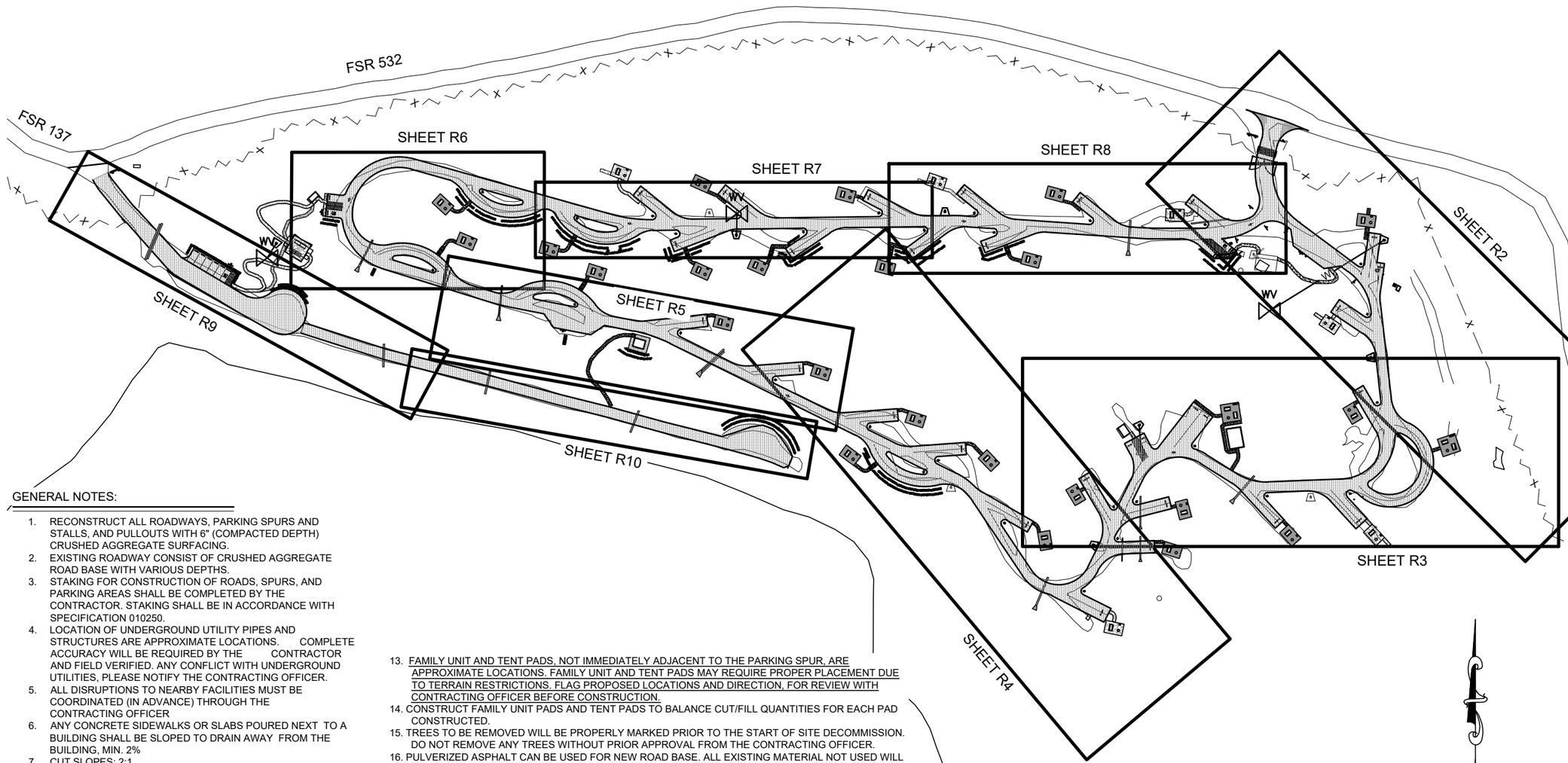


GENERAL NOTES:

1. RECONSTRUCT ALL ROADWAYS, PARKING SPURS AND STALLS, AND PULLOUTS WITH 6" (COMPACTED DEPTH) CRUSHED AGGREGATE SURFACING.
2. EXISTING ROADWAY CONSIST OF CRUSHED AGGREGATE ROAD BASE WITH VARIOUS DEPTHS.
3. STAKING FOR CONSTRUCTION OF ROADS, SPURS, AND PARKING AREAS SHALL BE COMPLETED BY THE CONTRACTOR. STAKING SHALL BE IN ACCORDANCE WITH SPECIFICATION 010250.
4. LOCATION OF UNDERGROUND UTILITY PIPES AND STRUCTURES ARE APPROXIMATE LOCATIONS. COMPLETE ACCURACY WILL BE REQUIRED BY THE CONTRACTOR AND FIELD VERIFIED. ANY CONFLICT WITH UNDERGROUND UTILITIES, PLEASE NOTIFY THE CONTRACTING OFFICER.
5. ALL DISRUPTIONS TO NEARBY FACILITIES MUST BE COORDINATED (IN ADVANCE) THROUGH THE CONTRACTING OFFICER
6. ANY CONCRETE SIDEWALKS OR SLABS POURED NEXT TO A BUILDING SHALL BE SLOPED TO DRAIN AWAY FROM THE BUILDING, MIN. 2%
7. CUT SLOPES: 2:1
8. FILL SLOPES: 3:1 UNLESS OTHERWISE NOTED.
9. SEE "DE" SHEETS FOR DEMOLITION PLAN.
10. SEE "S" SHEETS FOR SITE PLAN.
11. SEE "W" FOR WATER SYSTEM PLANS.
12. CLEARING LIMITS ARE ESTABLISHED IN SPECIFICATION 311000 UNLESS ANNOTATED ON THAT SPECIFIC DRAWING.
13. FAMILY UNIT AND TENT PADS, NOT IMMEDIATELY ADJACENT TO THE PARKING SPUR, ARE APPROXIMATE LOCATIONS. FAMILY UNIT AND TENT PADS MAY REQUIRE PROPER PLACEMENT DUE TO TERRAIN RESTRICTIONS. FLAG PROPOSED LOCATIONS AND DIRECTION, FOR REVIEW WITH CONTRACTING OFFICER BEFORE CONSTRUCTION.
14. CONSTRUCT FAMILY UNIT PADS AND TENT PADS TO BALANCE CUT/FILL QUANTITIES FOR EACH PAD CONSTRUCTED.
15. TREES TO BE REMOVED WILL BE PROPERLY MARKED PRIOR TO THE START OF SITE DECOMMISSION. DO NOT REMOVE ANY TREES WITHOUT PRIOR APPROVAL FROM THE CONTRACTING OFFICER.
16. PULVERIZED ASPHALT CAN BE USED FOR NEW ROAD BASE. ALL EXISTING MATERIAL NOT USED WILL BE PROPERLY (AND FULLY) REMOVED FROM THE PROJECT SITE.
17. ADJUSTMENTS TO THE LOCATIONS OF PARKING SPURS, TENT PADS, AND FAMILY UNITS MAY BE ACCEPTED IN ORDER TO INCREASE SHADE/SCREENING, ABA SITE ACCESSIBILITY OR DECREASE THE FREQUENCY OF TREE REMOVAL WHILE INSTALLING EACH SITE FEATURE. WHEN CONFLICTS OCCUR, NOTIFY THE CONTRACTING OFFICER IMMEDIATELY.
18. 2 LANE ROADWAY TO BE SURFACED WITH 6" CRUSHED AGGREGATE SURFACING.
19. PARKING SPURS TO BE SURFACED WITH 6" CRUSHED AGGREGATE SURFACING.

United States Department of Agriculture
Forest Service

R4
INTERMOUNTAIN REGION

STAMPS, LOGOS, AND SEALS

| NO. | REVISION / ISSUE | DATE |
|---|---|---|
| 4 | | |
| 3 | | |
| 2 | | |
| 1 | | |

PROJECT NAME

**GAOA KENTS LAKE CAMPGROUND RECONSTRUCTION PROJECT**

**FISHLAKE NATIONAL FOREST**

**BEAVER RANGER DISTRICT**

DRAWING TITLE

**ROAD OVERVIEW**

| | |
|---|---|
| DATE 02/20/2024 | ARCHIVE NO. |
| DESIGNER J. REDHOUSE | DRAWING SHEET NO. R1 |
| DRAWN J. REDHOUSE | |
| CHECKED R. ANDERSON | |
| PROJECT NO. | SHEET 27 OF 49 |

4/30/26 15:36 NATHANROBINSON C:\USERS\NATHANROBINSON\BOXENG\DESIGN\FISHLAKE\KENTS LAKE CAMPGROUND 2023\DWG\27 R1-37 R11_KENTS LAKE ROADWAYS.DWG;

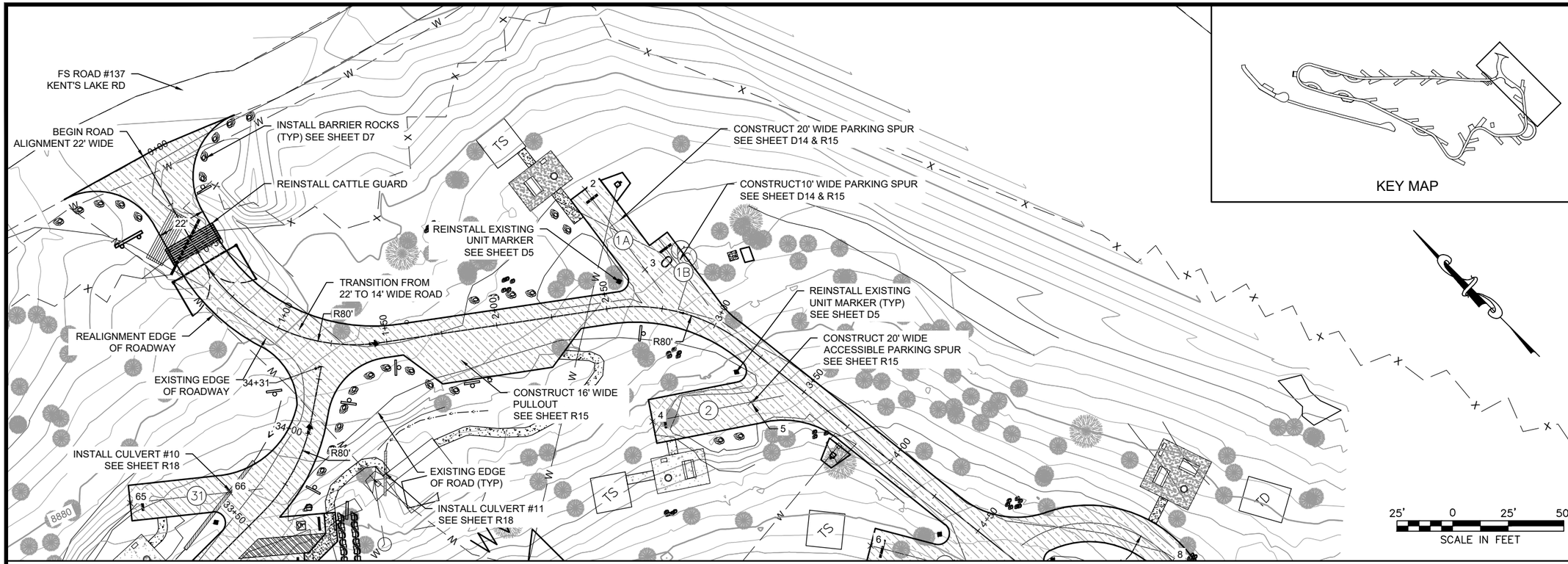





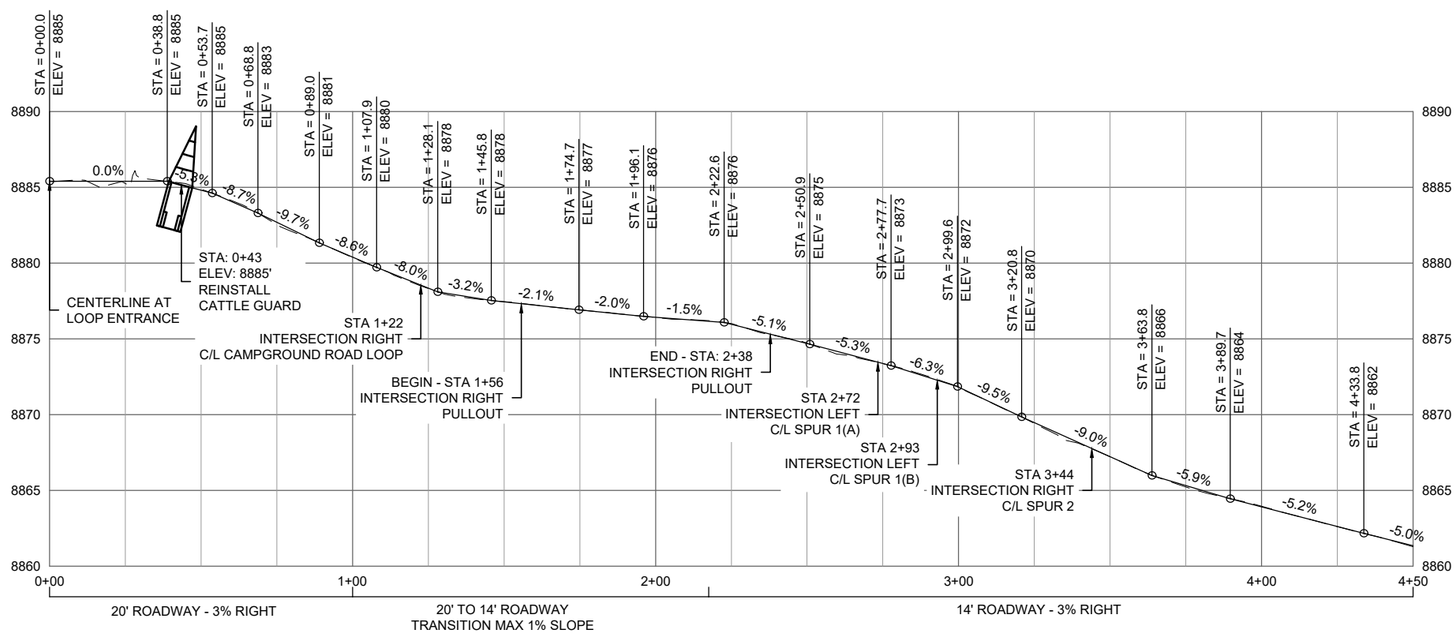


## CAMPGROUND LOOP ROAD PROFILE - 0+00 - 4+50

SCALE: 1:50 H, 1:5 V

USDA FOREST SERVICE

United States Department of Agriculture
Forest Service

**R4**
**INTERMOUNTAIN REGION**

STAMPS, LOGOS, AND SEALS

| NO. | REVISION / ISSUE | DATE |
|---|---|---|
| 4 | | |
| 3 | | |
| 2 | | |
| 1 | | |

PROJECT NAME

# GAOA KENTS LAKE CAMPGROUND RECONSTRUCTION PROJECT

**FISHLAKE NATIONAL FOREST**

**BEAVER RANGER DISTRICT**

DRAWING TITLE

**CAMPGROUND LOOP ROAD PROFILE - 0+00 TO 4+50**

| | |
|---|---|
| DATE 02/20/2024 | ARCHIVE NO. |
| DESIGNER J. REDHOUSE | DRAWING SHEET NO. R2 |
| DRAWN J. REDHOUSE | |
| CHECKED R. ANDERSON | |
| PROJECT NO. | SHEET 28 OF 49 |

4/30/26 15:36 NATHANROBINSON C:\USERS\NATHANROBINSON\BOXENG\DESIGN\FISHLAKE\KENTS LAKE CAMPGROUND 2023\DWG\R2-R3\R11_KENTSLAKE ROADWAYS.DWG;

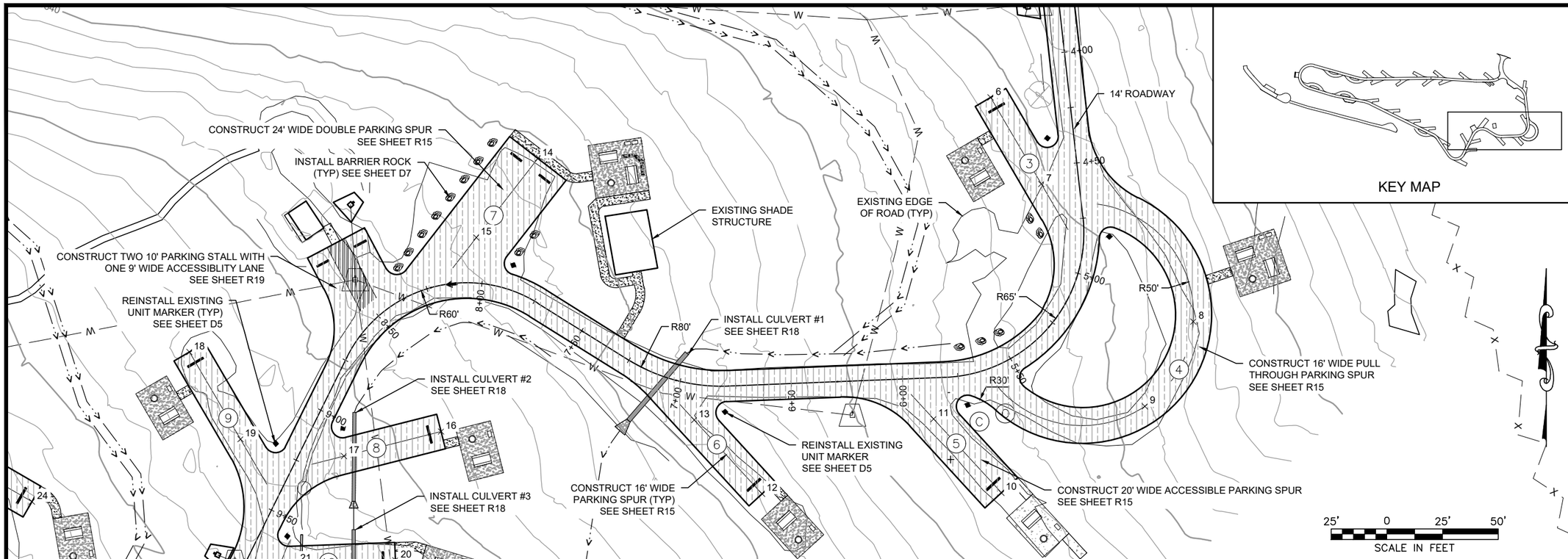


KEY MAP

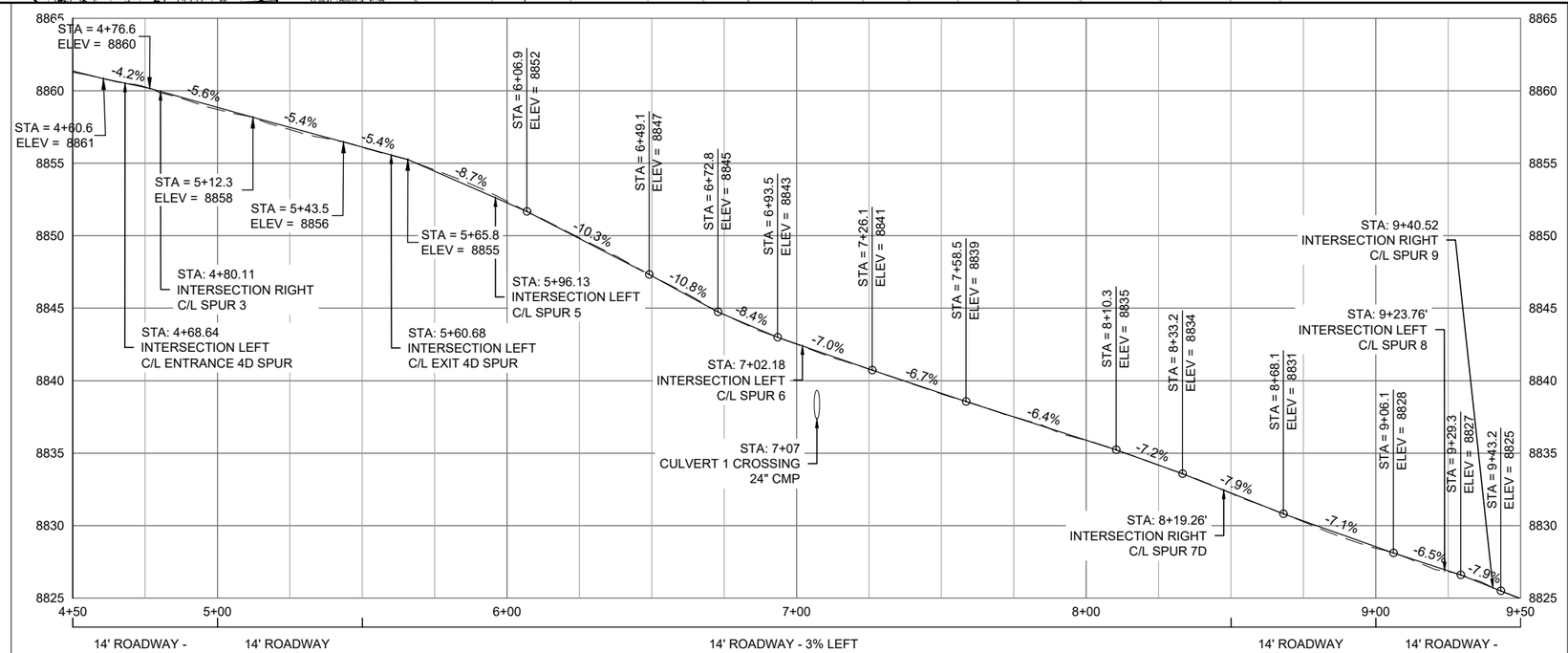


## CAMPGROUND LOOP ROAD PROFILE - 4+50 - 9+50

SCALE: 1:50 H, 1:5 V

USDA FOREST SERVICE

United States Department of Agriculture
Forest Service

**R4**
**INTERMOUNTAIN REGION**

STAMPS, LOGOS, AND SEALS

| NO. | REVISION / ISSUE | DATE |
|---|---|---|
| 4 | | |
| 3 | | |
| 2 | | |
| 1 | UPDATED HATCH IN 2-STALL | 05/29/2025 |

PROJECT NAME

# GAOA KENTS LAKE CAMPGROUND RECONSTRUCTION PROJECT

**FISHLAKE NATIONAL FOREST**

**BEAVER RANGER DISTRICT**

DRAWING TITLE

**CAMPGROUND LOOP ROAD PROFILE- 4+50 TO 9+50**

| | |
|---|---|
| DATE 02/20/2024 | ARCHIVE NO. |
| DESIGNER J. REDHOUSE | DRAWING SHEET NO. R3 |
| DRAWN J. REDHOUSE | |
| CHECKED R. ANDERSON | |
| PROJECT NO. | SHEET 29 OF 49 |

4/30/26 15:36 NATHANROBINSON C:\USERS\NATHANROBINSON\BOXENG\DESIGN\FISHLAKE\KENTS LAKE CAMPGROUND 2023\DWG\27 R1-37 R11_KENTSLAKE ROADWAYS.DWG;

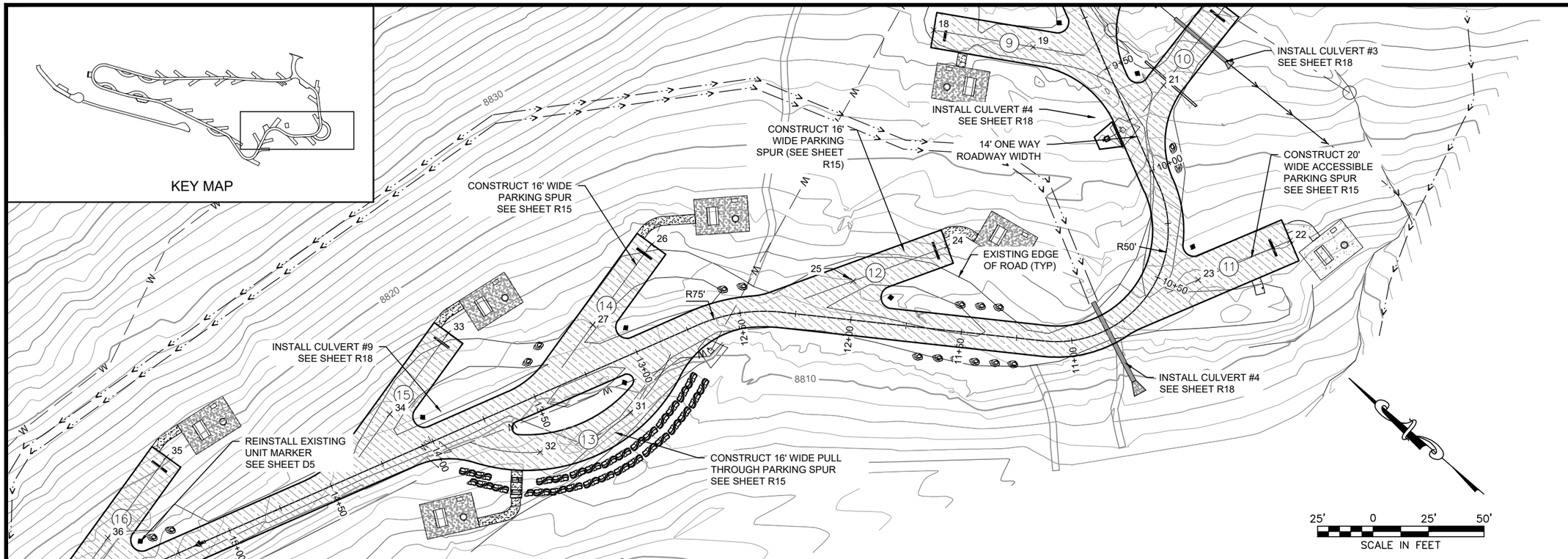


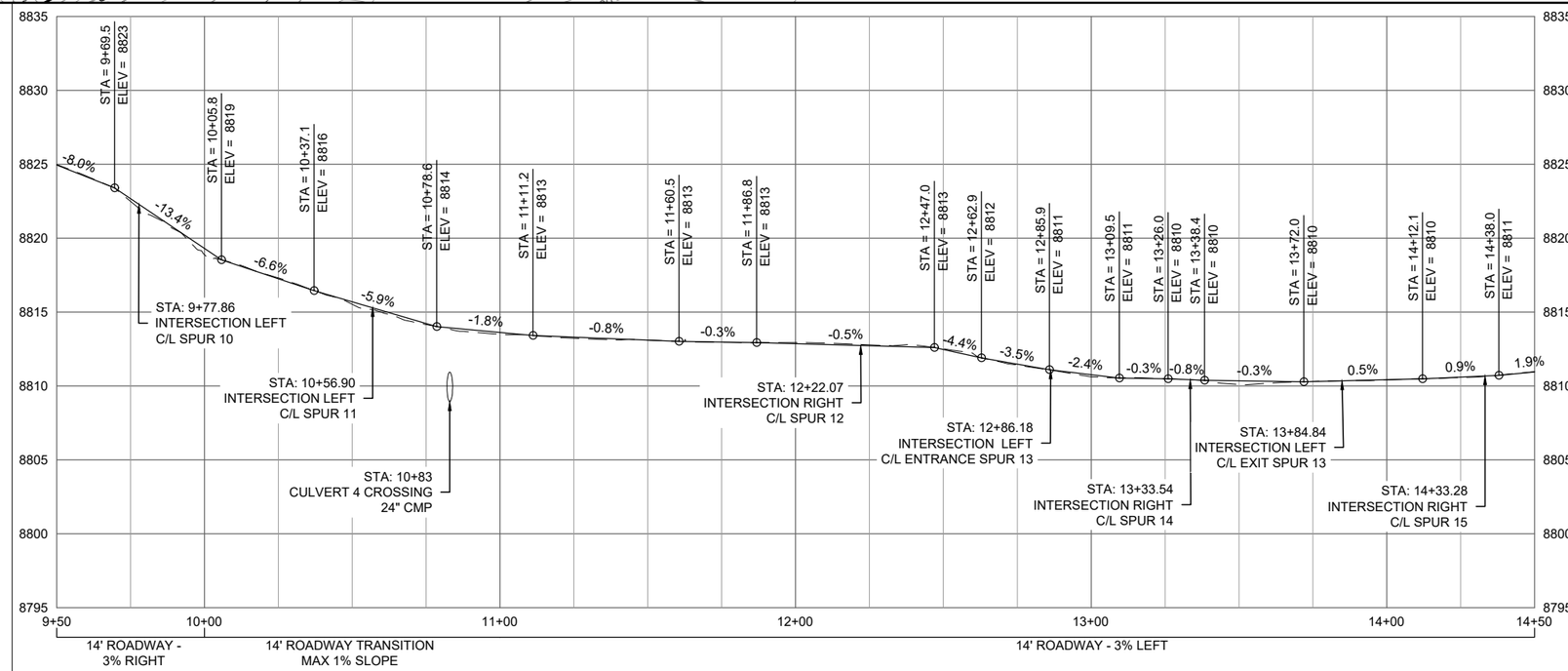


## CAMPGROUND LOOP ROAD PROFILE - 9+50 - 14+50

SCALE: 1:50 H, 1:5 V

USDA FOREST SERVICE

United States Department of Agriculture
Forest Service

**R4**
INTERMOUNTAIN REGION

STAMPS, LOGOS, AND SEALS

| NO. | REVISION / ISSUE | DATE |
|---|---|---|
| 4 | | |
| 3 | | |
| 2 | | |
| 1 | | |

PROJECT NAME

# GAOA KENTS LAKE CAMPGROUND RECONSTRUCTION PROJECT

**FISHLAKE NATIONAL FOREST**

**BEAVER RANGER DISTRICT**

DRAWING TITLE

**CAMPGROUND LOOP ROAD PROFILE- 9+50 to 14+50**

| | |
|---|---|
| DATE 02/20/2024 | ARCHIVE NO. |
| DESIGNER J. REDHOUSE | DRAWING SHEET NO. R4 |
| DRAWN J. REDHOUSE | |
| CHECKED R. ANDERSON | |
| PROJECT NO. | SHEET 30 OF 49 |

4/30/26 15:36 NATHANROBINSON C:\USERS\NATHANROBINSON\BOXENGDESIGN\FISHLAKE\KENTS LAKE CAMPGROUND\2023\DWG\27 R1-37 R11_KENTSLAKE ROADWAYS.DWG;

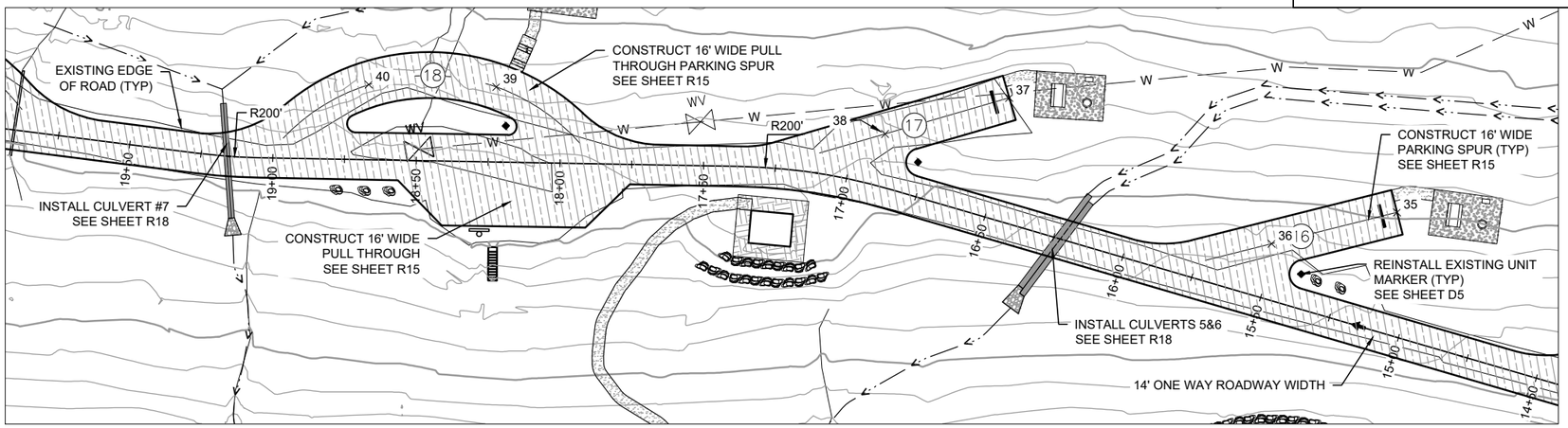


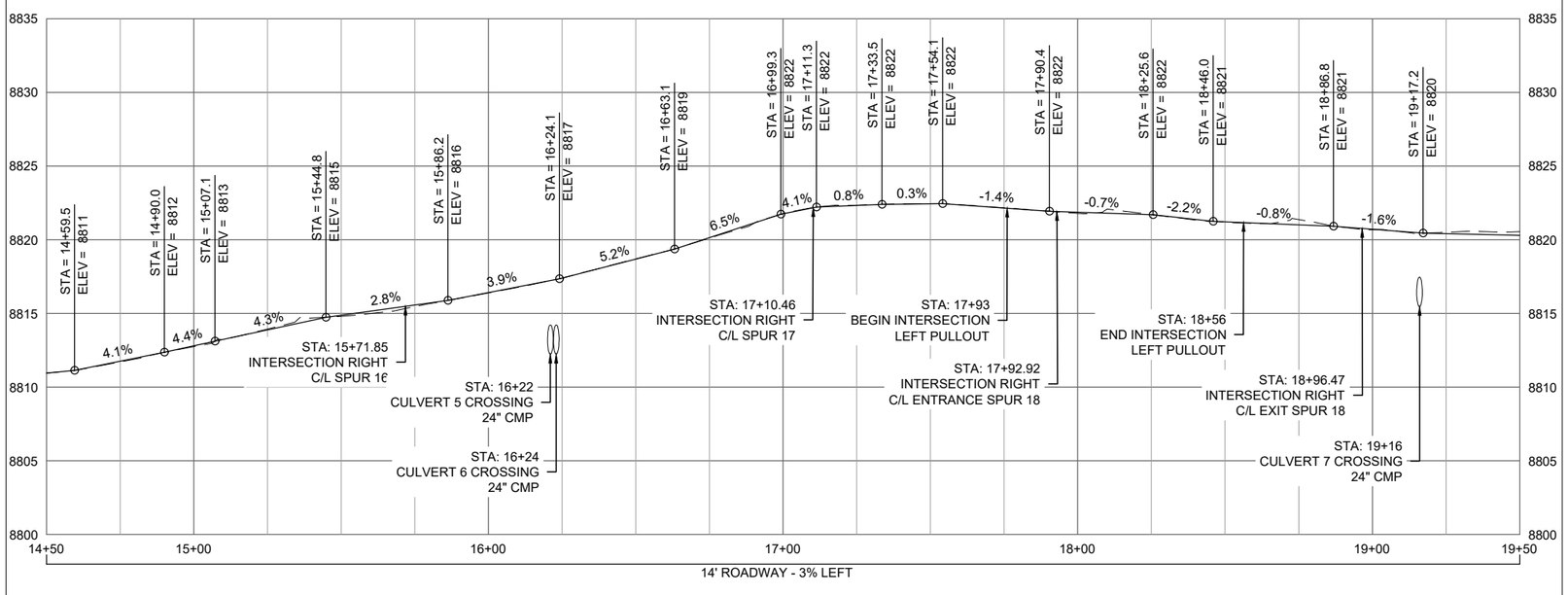


## CAMPGROUND LOOP ROAD PROFILE - 14+50 - 19+50

SCALE: 1:50 H, 1:5 V

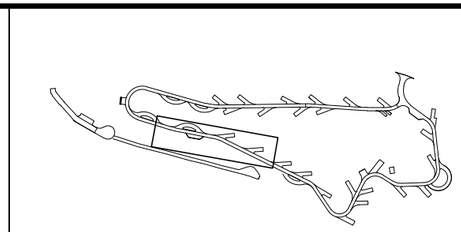

KEY MAP

United States Department of Agriculture
Forest Service

R4
INTERMOUNTAIN REGION

STAMPS, LOGOS, AND SEALS

| NO. | REVISION / ISSUE | DATE |
|---|---|---|
| 4 | | |
| 3 | | |
| 2 | | |
| 1 | | |

PROJECT NAME

**GAOA KENTS LAKE CAMPGROUND RECONSTRUCTION PROJECT**

**FISHLAKE NATIONAL FOREST**

**BEAVER RANGER DISTRICT**

DRAWING TITLE

**CAMPGROUND LOOP ROAD PROFILE- 14+50 TO 19+50**

| | |
|---|---|
| DATE 02/20/2024 | ARCHIVE NO. |
| DESIGNER J. REDHOUSE | DRAWING SHEET NO. R5 |
| DRAWN J. REDHOUSE | |
| CHECKED R. ANDERSON | |
| PROJECT NO. | SHEET 31 OF 49 |

4/30/25 15:36 NATHANROBINSON C:\USERS\NATHANROBINSON\BOXENG\DESIGN\FISHLAKE\KENTS LAKE CAMPGROUND 2023\DWG\27 R1-37 R11_KENTS LAKE ROADWAYS.DWG;

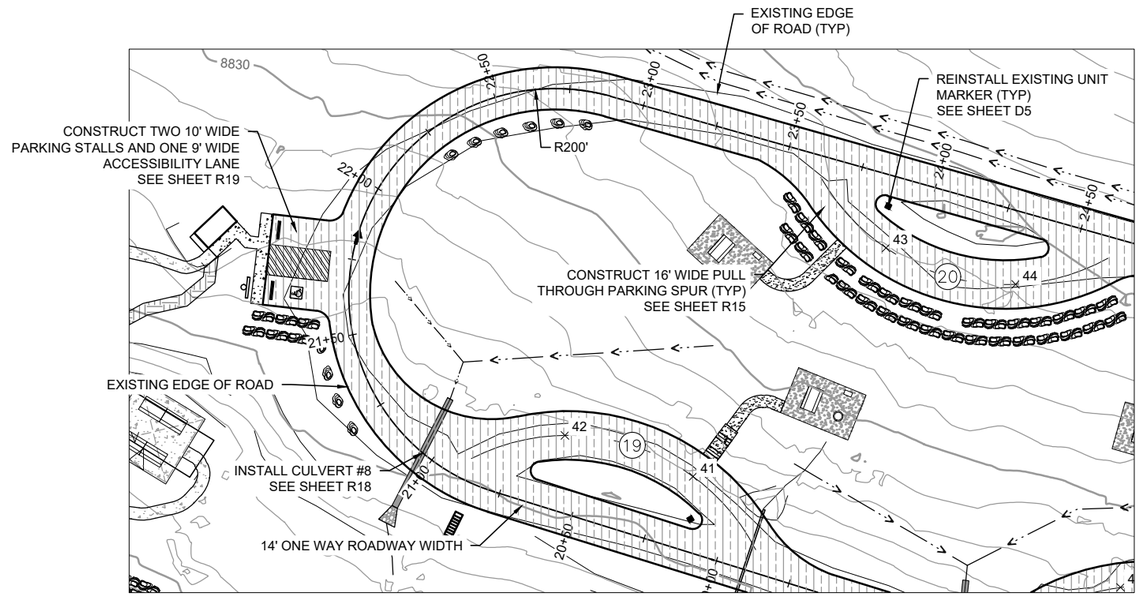


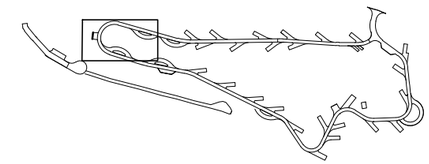

KEY MAP

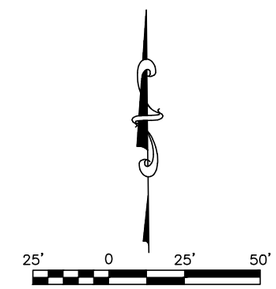


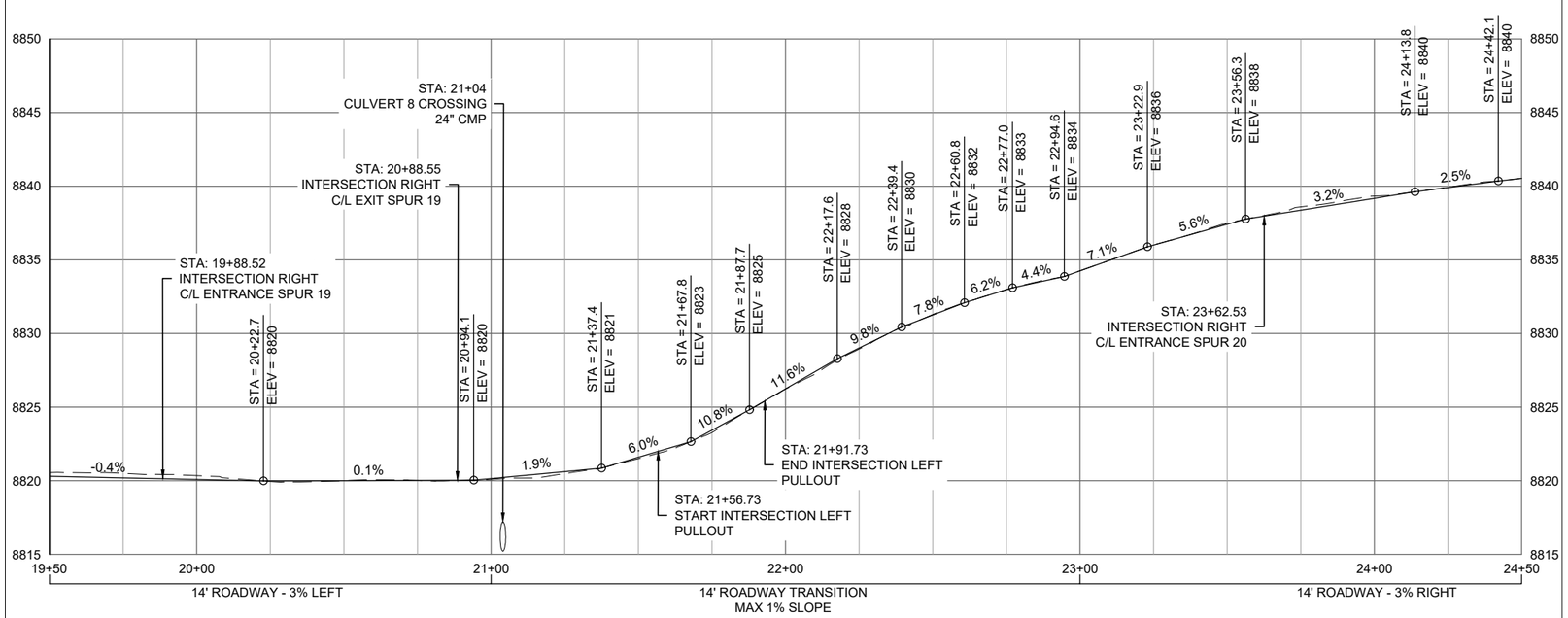


## CAMPGROUND LOOP ROAD PROFILE - 19+50 - 24+50

SCALE: 1:50 H, 1:5 V

USDA FOREST SERVICE

United States Department of Agriculture
Forest Service

**R4**
**INTERMOUNTAIN REGION**

STAMPS, LOGOS, AND SEALS

| NO. | REVISION / ISSUE | DATE |
|---|---|---|
| 4 | | |
| 3 | | |
| 2 | | |
| 1 | | |

PROJECT NAME

**GAOA KENTS LAKE CAMPGROUND RECONSTRUCTION PROJECT**

**FISHLAKE NATIONAL FOREST**

**BEAVER RANGER DISTRICT**

DRAWING TITLE

**CAMPGROUND LOOP ROAD PROFILE- 19+50 TO 24+50**

| | |
|---|---|
| DATE 02/20/2024 | ARCHIVE NO. |
| DESIGNER J. REDHOUSE | DRAWING SHEET NO. R6 |
| DRAWN J. REDHOUSE | |
| CHECKED R. ANDERSON | |
| PROJECT NO. | SHEET 32 OF 49 |

4/30/26 15:38 NATHANROBINSON C:\USERS\NATHANROBINSON\BOXENGDESIGN\FISHLAKE\KENTS LAKE CAMPGROUND 2023\DWG\27 R1-37 R11_KENTS LAKE ROADWAYS.DWG;

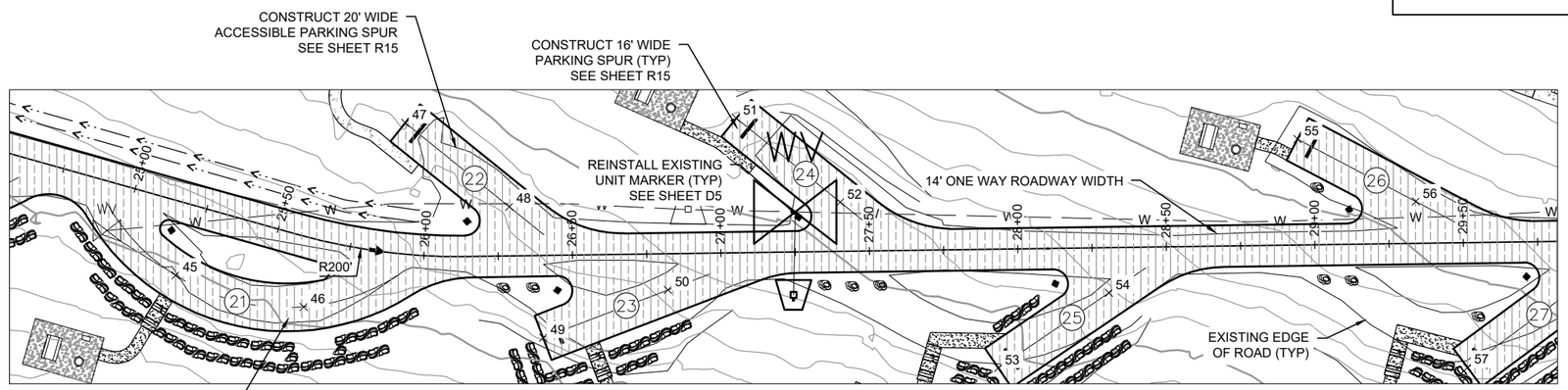


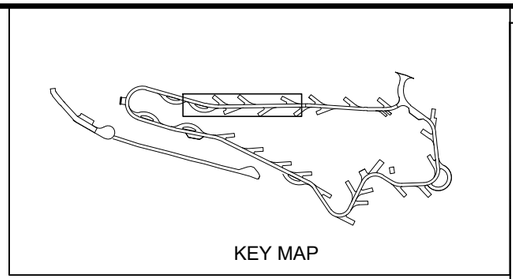


25' 0 25' 50'
SCALE IN FEET

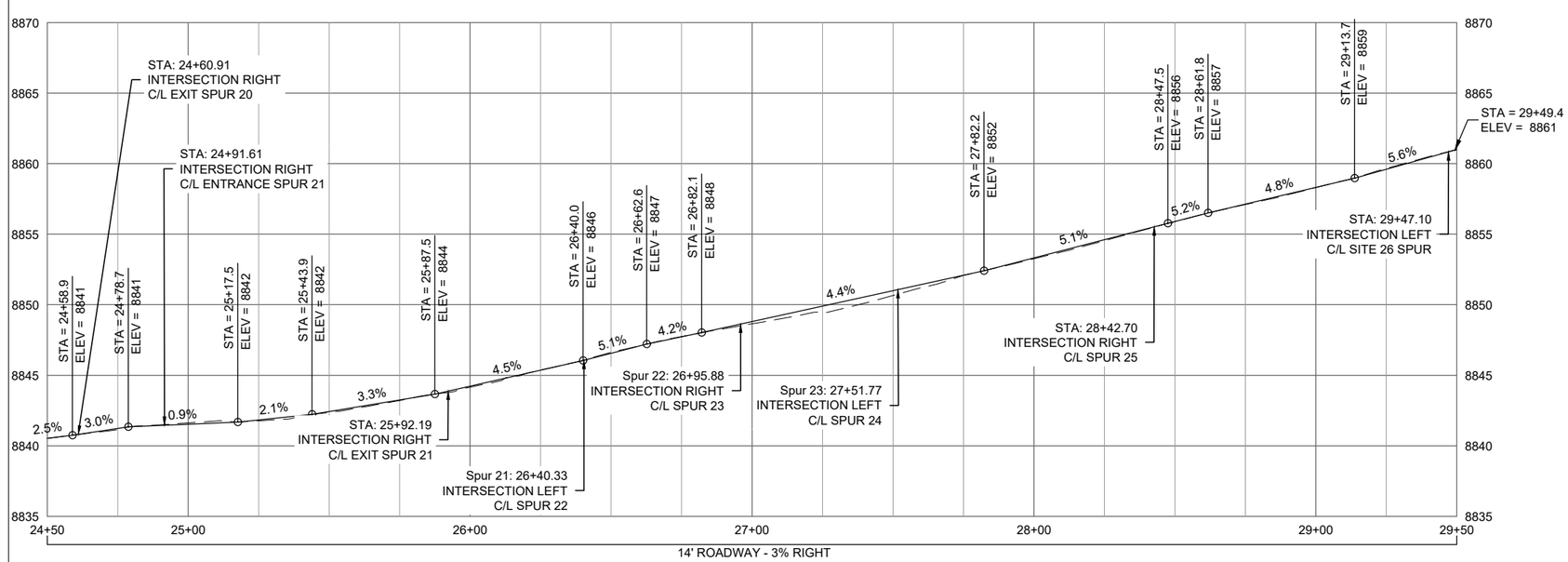


## CAMPGROUND LOOP ROAD PROFILE - 24+50 - 29+50

SCALE: 1:50 H, 1:5 V

United States Department of Agriculture
Forest Service

**R4**
**INTERMOUNTAIN REGION**

STAMPS, LOGOS, AND SEALS

| NO. | REVISION / ISSUE | DATE |
|---|---|---|
| 4 | | |
| 3 | | |
| 2 | | |
| 1 | | |

PROJECT NAME

**GAOA KENTS LAKE CAMPGROUND RECONSTRUCTION PROJECT**

**FISHLAKE NATIONAL FOREST**

**BEAVER RANGER DISTRICT**

DRAWING TITLE

**CAMPGROUND LOOP ROAD PROFILE 24+50 TO 29+50**

| | |
|---|---|
| DATE 02/20/2024 | ARCHIVE NO. |
| DESIGNER J. REDHOUSE | DRAWING SHEET NO. R7 |
| DRAWN J. REDHOUSE | |
| CHECKED R. ANDERSON | |
| PROJECT NO. | SHEET 33 OF 49 |

4/30/26 15:38 NATHANROBINSON C:\USERS\NATHANROBINSON\BOXENGDESIGN\FISHLAKE\KENTS LAKE CAMPGROUND 2023\DWG\27 R1-37 R11_KENTS LAKE ROADWAYS.DWG;

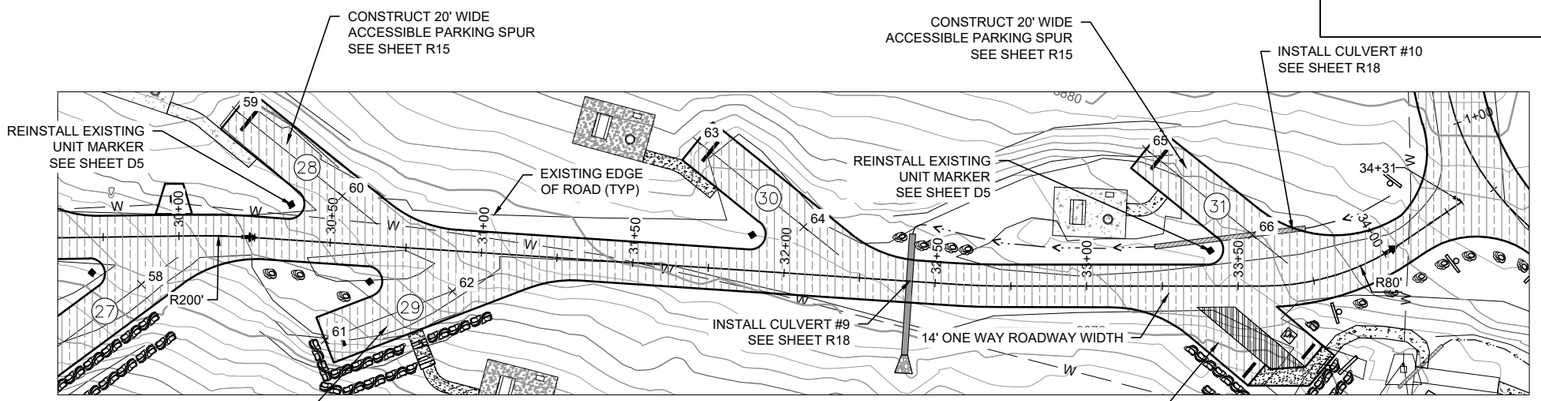


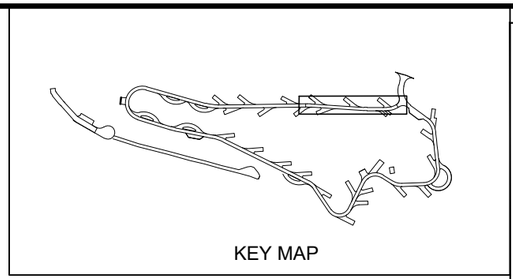


25' 0 25' 50'
SCALE IN FEET

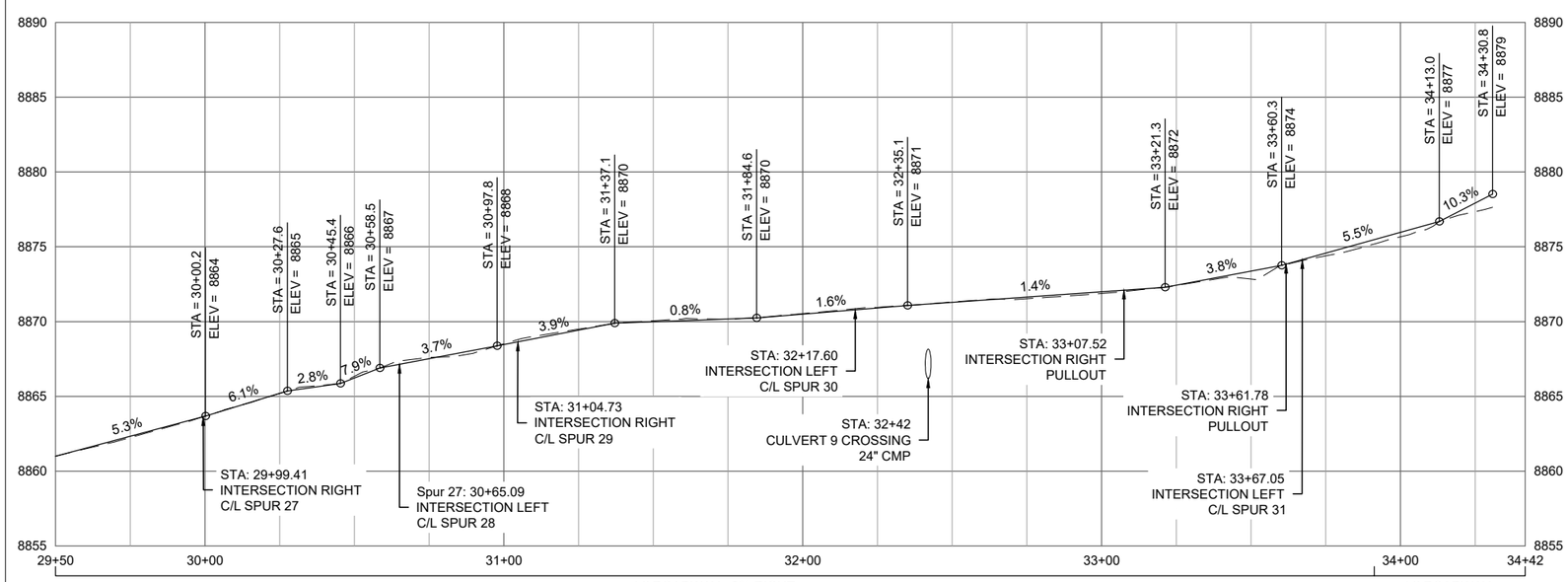


## CAMPGROUND LOOP ROAD PROFILE - 29+50 - 34+42

SCALE: 1:50 H, 1:5 V

United States Department of Agriculture
Forest Service

R4
INTERMOUNTAIN REGION

STAMPS, LOGOS, AND SEALS

| NO. | REVISION / ISSUE | DATE |
|---|---|---|
| 4 | | |
| 3 | | |
| 2 | | |
| 1 | | |

PROJECT NAME

**GAOA KENTS LAKE CAMPGROUND RECONSTRUCTION PROJECT**

**FISHLAKE NATIONAL FOREST**

**BEAVER RANGER DISTRICT**

DRAWING TITLE

**CAMPGROUND LOOP ROAD PROFILE 29+50 to 34+42**

| | |
|---|---|
| DATE 02/20/2024 | ARCHIVE NO. |
| DESIGNER J. REDHOUSE | DRAWING SHEET NO. R8 |
| DRAWN J. REDHOUSE | |
| CHECKED R. ANDERSON | |
| PROJECT NO. | SHEET 34 OF 49 |

4/30/26 15:38 NATHANROBINSON C:\USERS\NATHANROBINSON\BOXENGDESIGN\FISHLAKE\KENTS LAKE CAMPGROUND 2023\DWG\27 R1-37 R11_KENTS LAKE ROADWAYS.DWG;

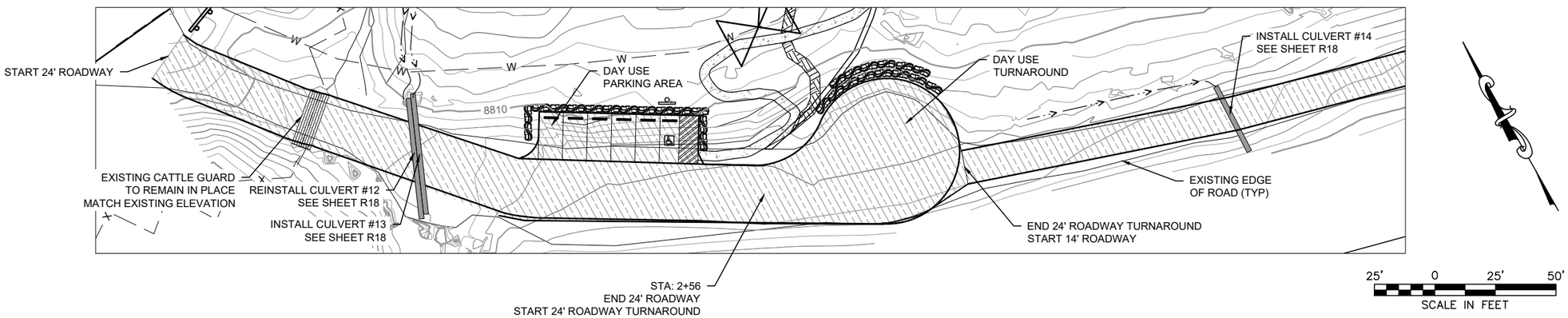


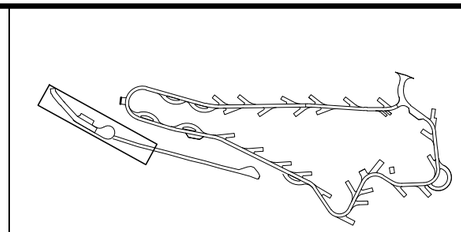

KEY MAP

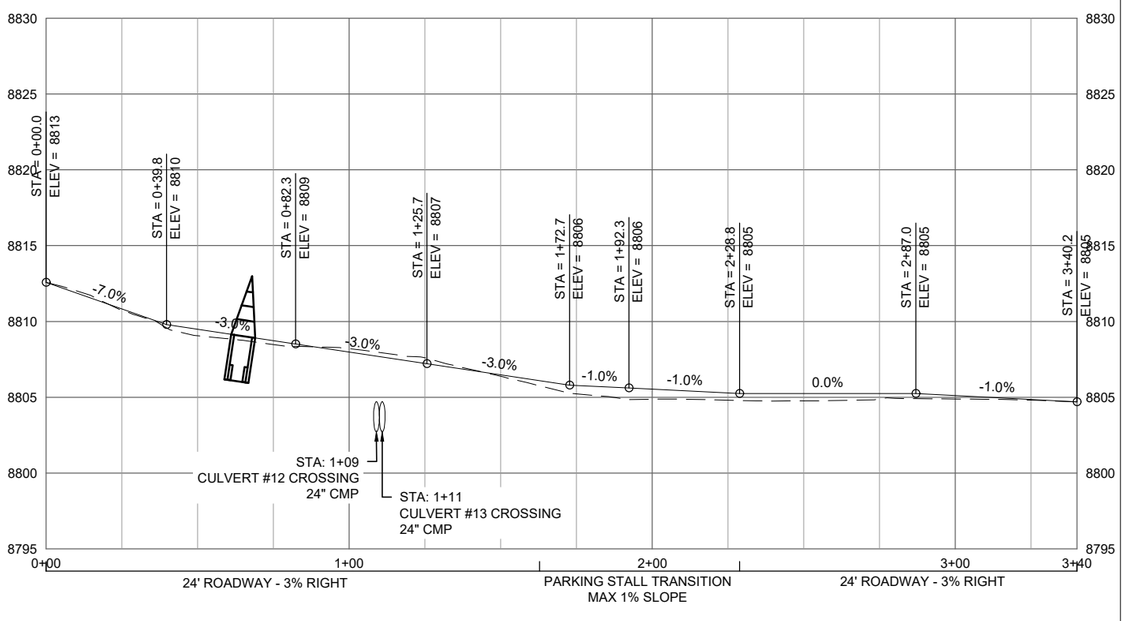


DAY USE AREA ROAD PROFILE - 24' SECTION - 0+00 - 3+57

SCALE: 1:50 H, 1:5 V

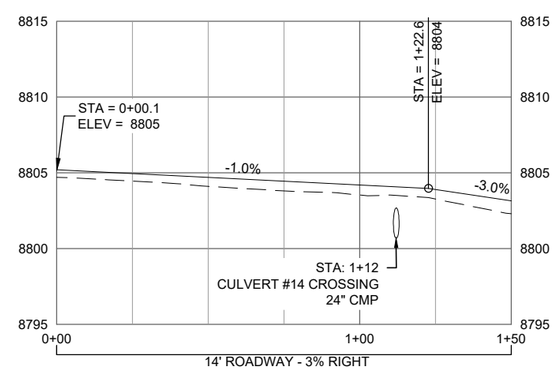


DAY USE AREA ROAD PROFILE - 14' SECTION - 0+00 - 1+50

SCALE: 1:50 H, 1:5 V

United States Department of Agriculture
Forest Service

R4
INTERMOUNTAIN REGION

STAMPS, LOGOS, AND SEALS

| NO. | REVISION / ISSUE | DATE |
|---|---|---|
| 4 | | |
| 3 | | |
| 2 | | |
| 1 | | |

PROJECT NAME

**GAOA KENTS LAKE CAMPGROUND RECONSTRUCTION PROJECT**

**FISHLAKE NATIONAL FOREST**

**BEAVER RANGER DISTRICT**

DRAWING TITLE

**DAY USE AREA ROAD PROFILE - 0+00 TO 3+57 (24' SECTION), 0+00 TO 1+50 (14' SECTION)**

| | |
|---|---|
| DATE 02/20/2024 | ARCHIVE NO. |
| DESIGNER J. REDHOUSE | DRAWING SHEET NO. R9 |
| DRAWN J. REDHOUSE | |
| CHECKED R. ANDERSON | |
| PROJECT NO. | SHEET 35 OF 49 |

4/30/25 15:36 NATHANROBINSON C:\USERS\NATHANROBINSON\OXENGDESIGN\FISHLAKE\KENTS LAKE CAMPGROUND 2023\DWG\27 R1-37 R11 - KENTS LAKE ROADWAY S.DWG;

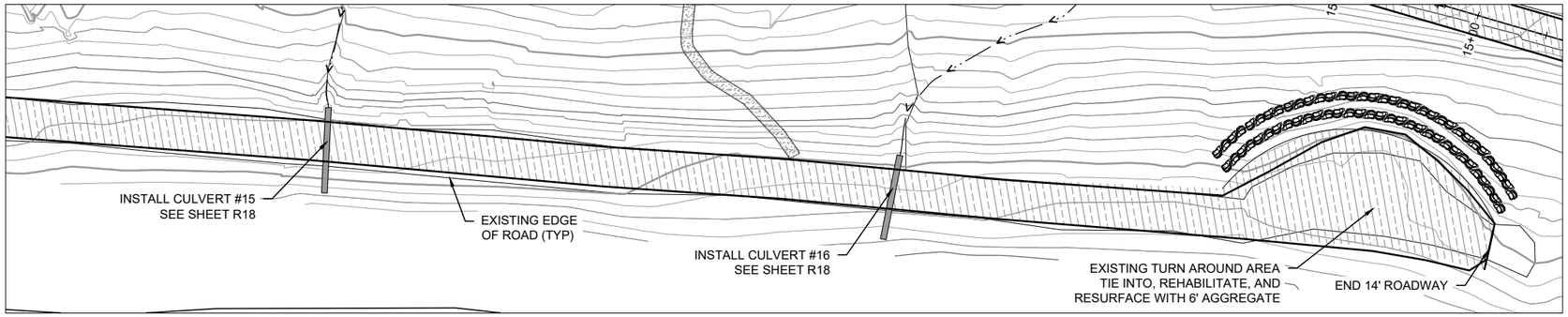


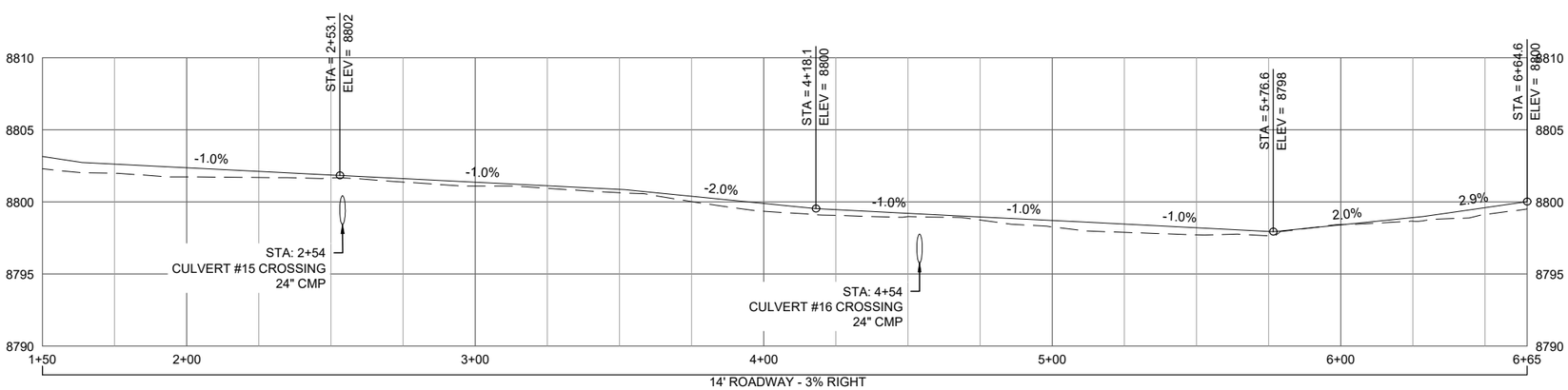


## DAY USE AREA ROAD PROFILE - 14' SECTION - 1+50 - 6+65

SCALE: 1:50 H, 1:5 V

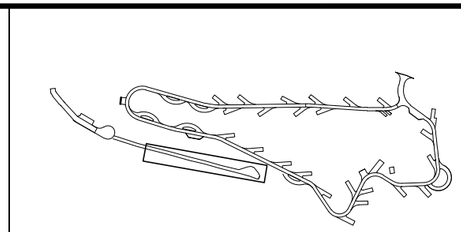

KEY MAP

United States Department of Agriculture
Forest Service

**R4**
INTERMOUNTAIN REGION

STAMPS, LOGOS, AND SEALS

| NO. | REVISION / ISSUE | DATE |
|---|---|---|
| 4 | | |
| 3 | | |
| 2 | | |
| 1 | | |

PROJECT NAME

**GAOA KENTS LAKE CAMPGROUND RECONSTRUCTION PROJECT**

**FISHLAKE NATIONAL FOREST**

**BEAVER RANGER DISTRICT**

DRAWING TITLE

**DAY USE AREA ROAD PROFILE - 1+50 TO 6+64.6 (6+42, 14' SECTION)**

| | |
|---|---|
| DATE 02/20/2024 | ARCHIVE NO. |
| DESIGNER J. REDHOUSE | DRAWING SHEET NO. R10 |
| DRAWN J. REDHOUSE | |
| CHECKED R. ANDERSON | |
| PROJECT NO. | SHEET 36 OF 49 |

4/30/26 15:38 NATHANROBINSON C:\USERS\NATHANROBINSON\BOXENGDESIGN\FISHLAKE\KENTS LAKE CAMPGROUND 2023\DWG\27 R1-37 R11_KENTS LAKE ROADWAYS.DWG;

LEGEND:

PROPOSED DRAINAGE DITCH

PROPOSED ROADSIDE DITCH

PROPOSED CMP OUTLET
*BASE BID ITEM

INDIVIDUAL BARRIER ROCK

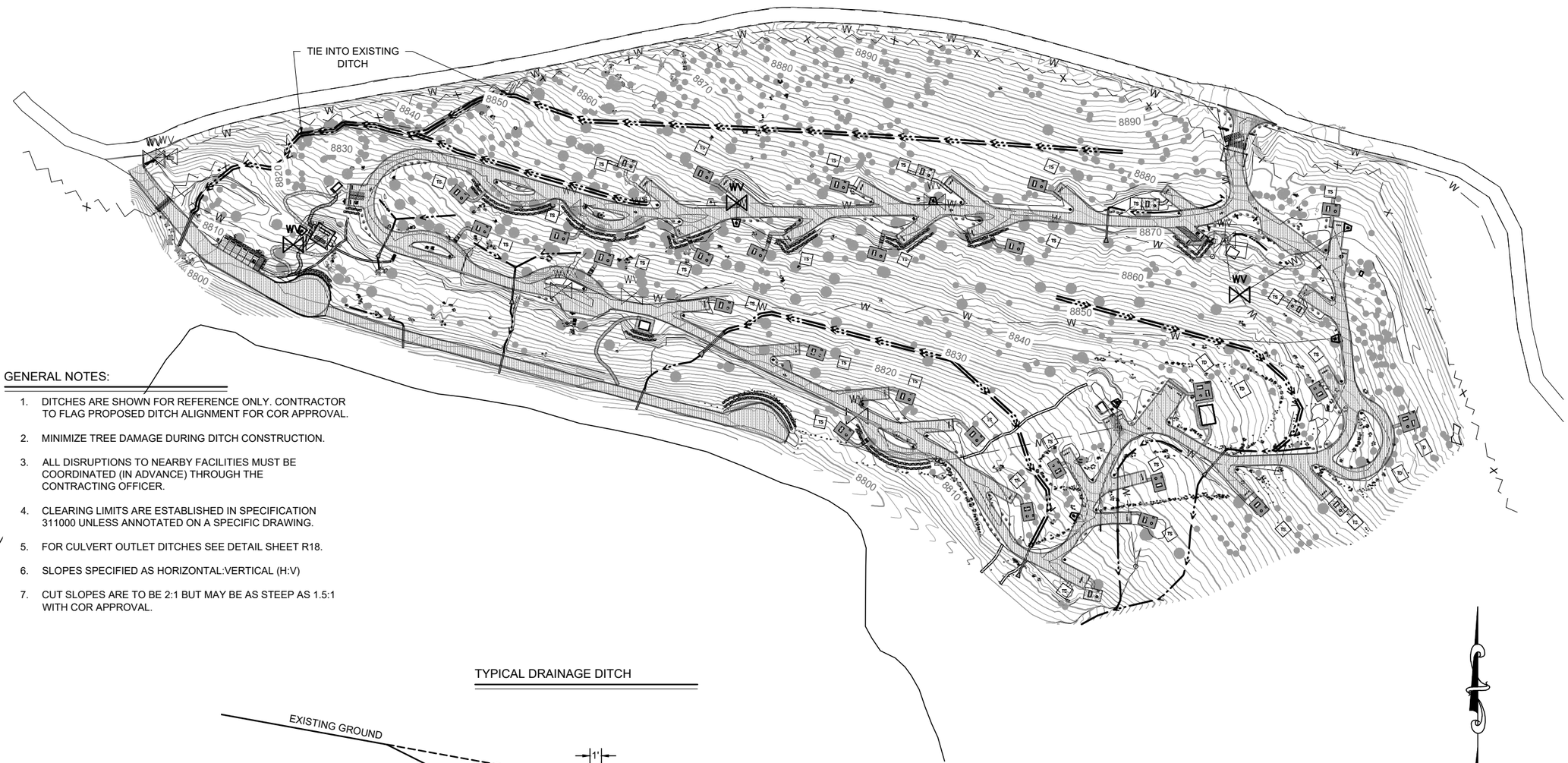


GENERAL NOTES:

1. DITCHES ARE SHOWN FOR REFERENCE ONLY. CONTRACTOR TO FLAG PROPOSED DITCH ALIGNMENT FOR COR APPROVAL.
2. MINIMIZE TREE DAMAGE DURING DITCH CONSTRUCTION.
3. ALL DISRUPTIONS TO NEARBY FACILITIES MUST BE COORDINATED (IN ADVANCE) THROUGH THE CONTRACTING OFFICER.
4. CLEARING LIMITS ARE ESTABLISHED IN SPECIFICATION 311000 UNLESS ANNOTATED ON A SPECIFIC DRAWING.
5. FOR CULVERT OUTLET DITCHES SEE DETAIL SHEET R18.
6. SLOPES SPECIFIED AS HORIZONTAL:VERTICAL (H:V)
7. CUT SLOPES ARE TO BE 2:1 BUT MAY BE AS STEEP AS 1.5:1 WITH COR APPROVAL.

TYPICAL DRAINAGE DITCH

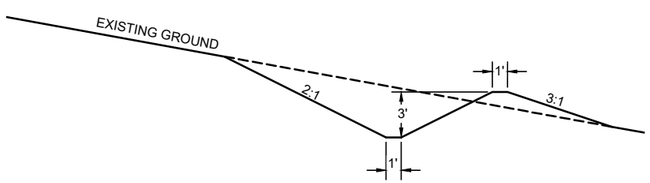


80' 0 80' 160'
SCALE IN FEET

USDA FOREST SERVICE

United States Department of Agriculture
Forest Service

R4
INTERMOUNTAIN REGION

STAMPS, LOGOS, AND SEALS

| NO. | REVISION / ISSUE | DATE |
|---|---|---|
| 4 | | |
| 3 | | |
| 2 | | |
| 1 | UPDATED NOTES | 05/29/2025 |

PROJECT NAME

# GAOA KENTS LAKE CAMPGROUND RECONSTRUCTION PROJECT

FISHLAKE NATIONAL FOREST

BEAVER RANGER DISTRICT

DRAWING TITLE

## ROAD OVERVIEW - DRAINAGE LAYOUT

| | |
|---|---|
| DATE 02/20/2024 | ARCHIVE NO. |
| DESIGNER J. REDHOUSE | DRAWING SHEET NO. R11 |
| DRAWN J. REDHOUSE | |
| CHECKED R. ANDERSON | |
| PROJECT NO. | SHEET 37 OF 49 |

4/30/26 15:36 NATHANROBINSON C:\USERS\NATHANROBINSON\BOX\ENG\DESIGN\FISHLAKE\KENTS.LAKE.CAMPGROUND.2023\DWG\27 R1-37 R11_KENTS.LAKE ROADWAYS.DWG;

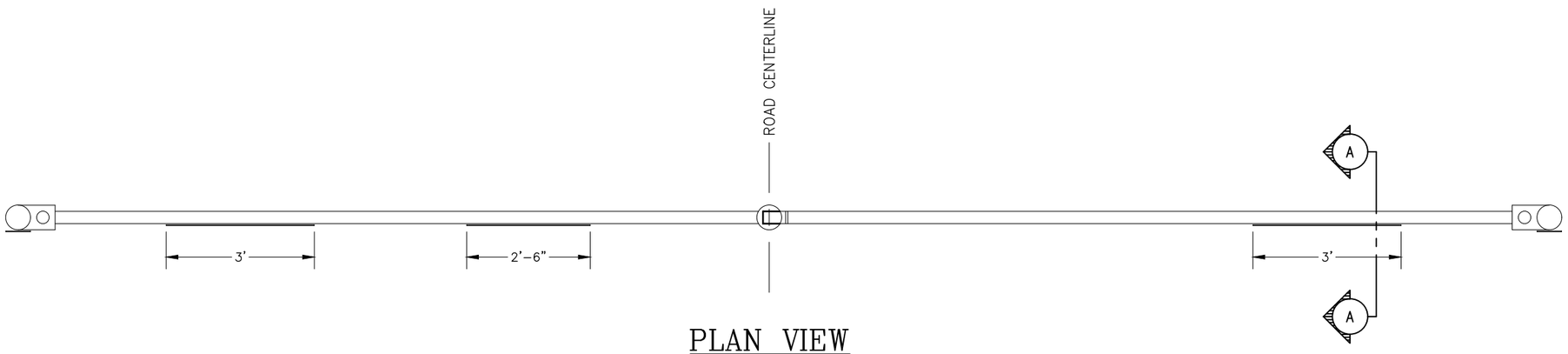


## PLAN VIEW

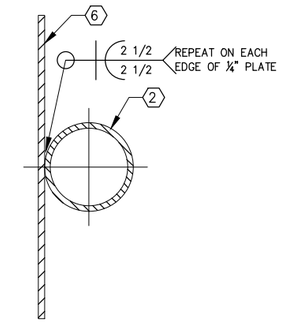


## SECTION A–A METAL SIGN PLATE MOUNTING DETAIL

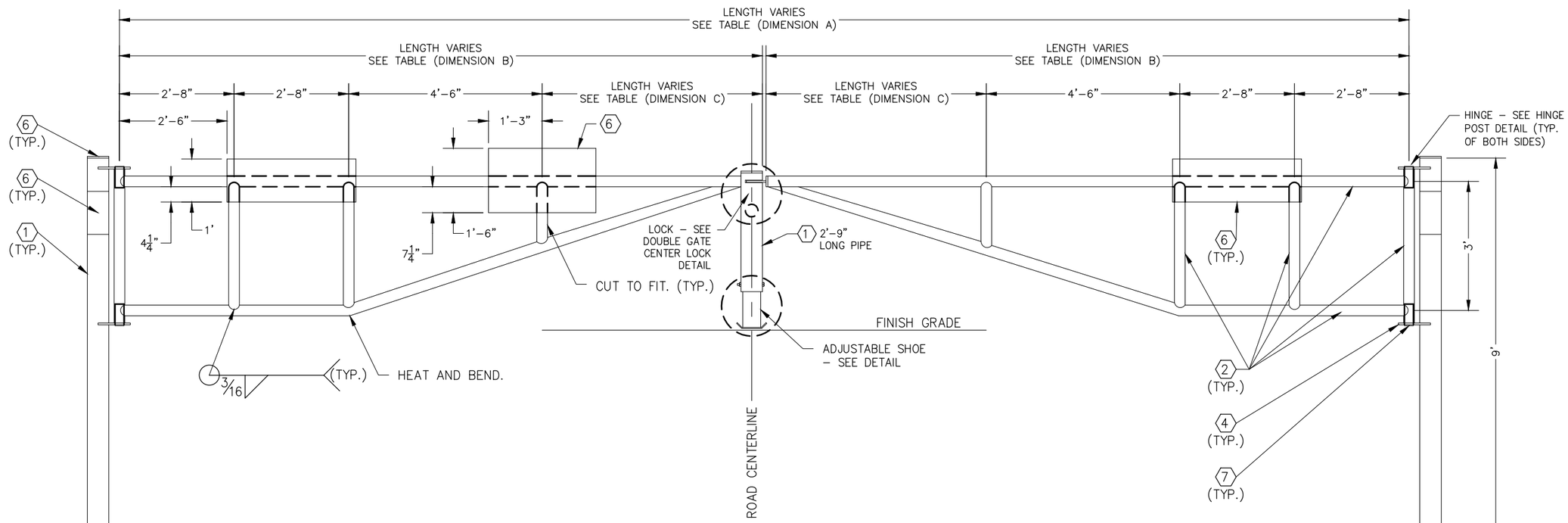


## ELEVATION VIEW

## MATERIALS:

| | | | |
|---|---|---|---|
| 1 | 6" DIAMETER PIPE | 6 | ¼" THICK PLATE |
| 2 | 3" DIAMETER PIPE | 7 | 2½" DIAMETER PIPE |
| 3 | 4" DIAMETER PIPE | 8 | 3" PIPE CAP WITH GREASE FITTING |
| 4 | ¾" THICK PLATE | 9 | 5" DIAMETER PIPE |
| 5 | ½" THICK PLATE | | |

NOTES:

1. PRIOR TO FABRICATING GATE, THE CONTRACTOR SHALL CHECK SLOPE OF ROADWAY WHERE GATE IS TO BE INSTALLED. THE GATE MUST OPEN TOWARD MINUS GRADE ON THE FINISHED ROAD SURFACE.
2. PAINT ALL EXPOSED METAL SURFACES WITH ONE COAT OF BENJAMIN MOORE RETARDO METAL PRIMER AND TWO COATS OF BENJAMIN MOORE BROWN IMPERVO NO. 20059 OR APPROVED EQUALS.

## DIMENSION TABLE

| DIMENSION | LENGTH (28' GATE) | LENGTH (30' GATE) |
|---|---|---|
| A | 28' | 30' |
| B | 13'–11½" | 14'–11½" |
| C | 4'–1½" | 5'–1½" |

United States Department of Agriculture
Forest Service

R4
INTERMOUNTAIN REGION

STAMPS, LOGOS, AND SEALS

| NO. | REVISION / ISSUE | DATE |
|---|---|---|
| 4 | | |
| 3 | | |
| 2 | | |
| 1 | | |

PROJECT NAME

**GAOA KENTS LAKE CAMPGROUND RECONSTRUCTION PROJECT**

**FISHLAKE NATIONAL FOREST**

**BEAVER RANGER DISTRICT**

DRAWING TITLE

**GATE FABRICATION DETAILS**

DATE 02/03/2024
ARCHIVE NO.
DESIGNER D. WEWER
DRAWN D. WEWER
CHECKED R. ANDERSON
PROJECT NO.
DRAWING SHEET NO. R12
SHEET 38 OF 49

2/4/26 11:17 NATHANROBINSON C:\USERS\NATHANROBINSON\BOXENC\DESIGN\FISHLAKE\KENTS.LAKE.CAMPGROUND.2023\DWG\38 R12- 40 R14_KENTS.LAKE.GATES.DWG;

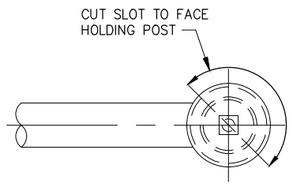


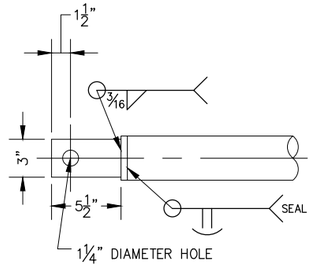


GATE LOCK PLAN

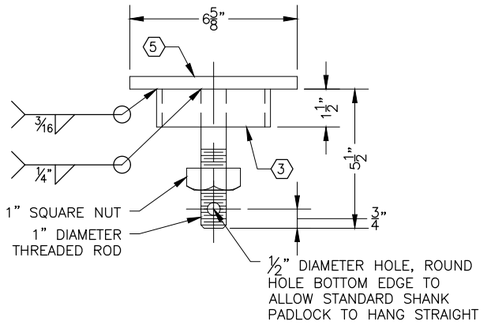


LOCK CAP ELEVATION

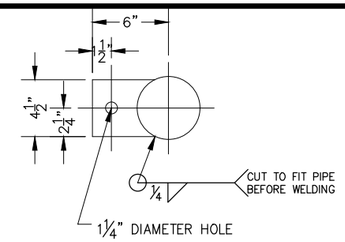


HOLDING POST PLAN

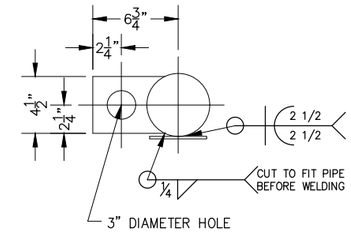


HINGE POST PLAN

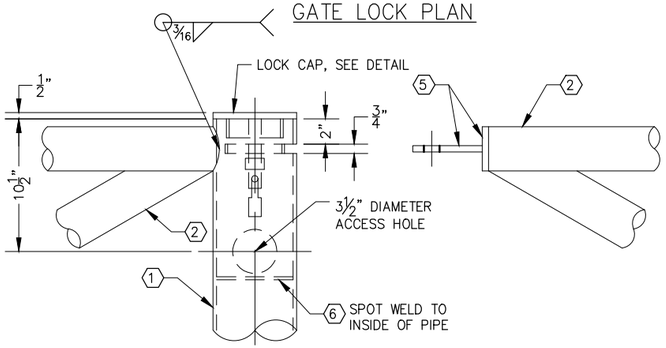


GATE LOCK ELEVATION

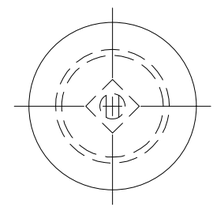

LOCK CAP PLAN

LOCK CAP DETAIL

DOUBLE GATE CENTER LOCK DETAIL

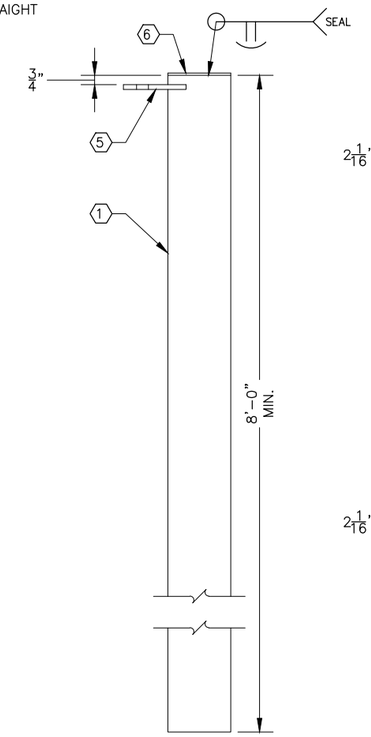


HOLDING POST ELEVATION

HOLDING POST "A" DETAIL

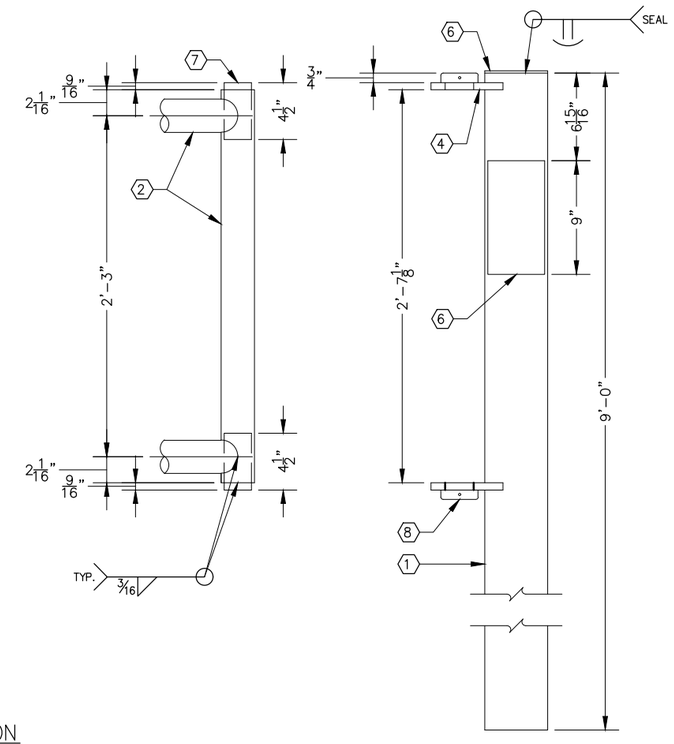


HINGE POST ELEVATIONS

HINGE POST DETAIL

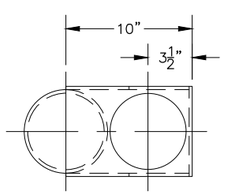


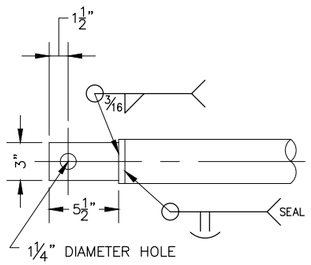


"B" GATE LOCK PLAN

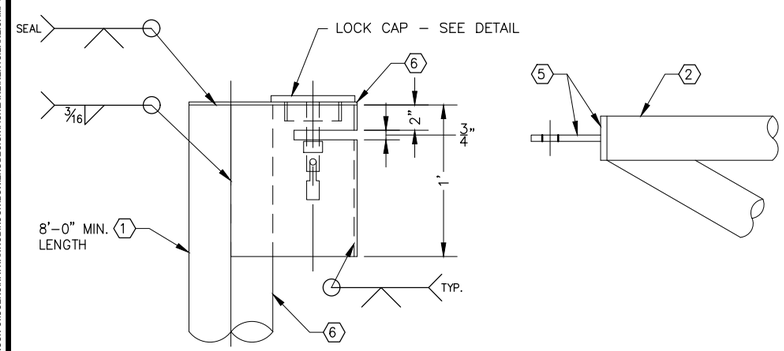


"B" GATE LOCK ELEVATION

HOLDING POST "B" GATE LOCK DETAIL

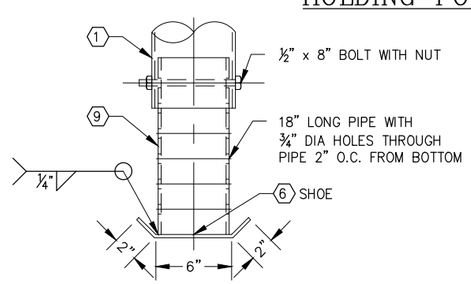


ADJUSTABLE SHOE DETAIL

NOTE:

MATERIALS LIST FOUND ON "GATE FABRICATION" SHEET.

USDA

United States Department of Agriculture
Forest Service

R4
INTERMOUNTAIN REGION

STAMPS, LOGOS, AND SEALS

| NO. | REVISION / ISSUE | DATE |
|---|---|---|
| 4 | | |
| 3 | | |
| 2 | | |
| 1 | | |

PROJECT NAME

**GAOA KENTS LAKE CAMPGROUND RECONSTRUCTION PROJECT**

**FISHLAKE NATIONAL FOREST**

**BEAVER RANGER DISTRICT**

DRAWING TITLE

**GATE FABRICATION DETAILS (CONT'D.)**

| | |
|---|---|
| DATE 02/20/2024 | ARCHIVE NO. |
| DESIGNER D. WEWER | DRAWING SHEET NO. R13 |
| DRAWN D. WEWER | |
| CHECKED R. ANDERSON | |
| PROJECT NO. | SHEET 39 OF 49 |

2/4/26 11:17 NATHANROBINSON C:\USERS\NATHANROBINSON\BOXENG\DESIGN\FISHLAKE\KENTS LAKE CAMPGROUND 2023\DWG\38 R12-40 R14_KENTS LAKE GATES.DWG;

NOTES:

1. FIELD LOCATE HOLDING POSTS TO SUPPORT GATE IN OPEN POSITION.
2. ALL SIGNS AND OBJECT MARKERS SHALL BE BOLTED TO STEEL BACKING PLATES.
3. IF HOLES FOR POSTS ARE OVER EXCAVATED, THE CONTRACTOR MUST FILL THE OVER EXCAVATED HOLES WITH CONCRETE AT NO EXTRA COST TO THE GOVERNMENT.
4. THE CONTRACTOR SHALL FURNISH AND INSTALL OBJECT MARKERS AND SIGNS. THESE SHALL CONFORM TO THE MANUAL OF UNIFORM TRAFFIC CONTROL DEVICES.

## SIGN SCHEDULE

| SIGN | QTY. | DESCRIPTION | SIZE | MATERIAL | REMARKS |
|---|---|---|---|---|---|
| 1A | SEE SITE PLAN | FRD-1-4 BLACK ON WHITE | AS REQ. | ALUMINUM | LOOP "X" CLOSED (SEE SITE PLAN) |
| 1B | SEE SITE PLAN | FRD-1-4 BLACK ON WHITE | AS REQ. | ALUMINUM | AREA CLOSED (SEE SITE PLAN) |
| 2 | 1 | BM-L | 36 x 12 | ALUMINUM | |
| 3 | 1 | BM-R | 36 x 12 | ALUMINUM | |
| 4 | 8 | OM2-2 | 6 x 12 | REFLECTORIZED DECAL | |

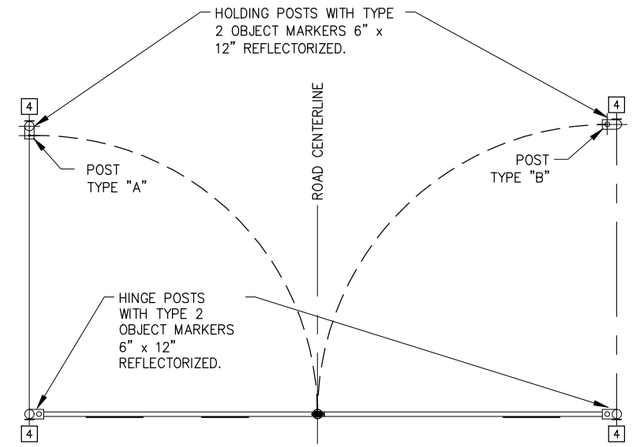


LAYOUT VIEW

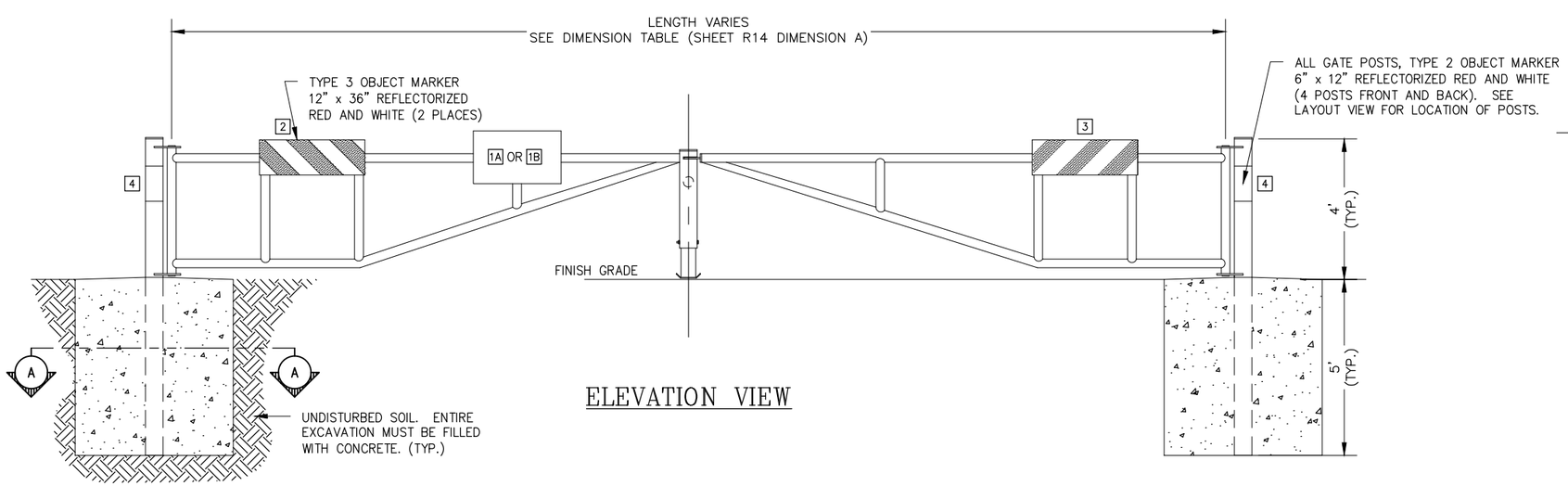


ELEVATION VIEW

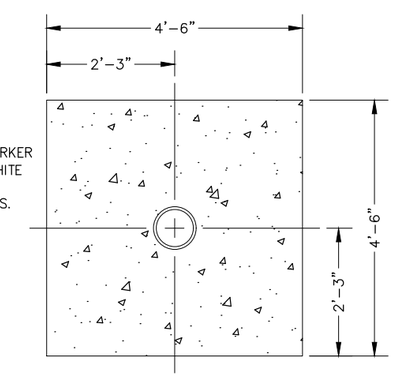


SECTION A-A

NOTES:

1. TYPICAL FOR HINGE POSTS ONLY.
2. CONCRETE BASES FOR HOLDING POSTS "A" AND "B" SHALL BE 24" SQUARE AND 48" DEEP.
3. EXPOSED TOP PORTION OF EACH CONCRETE BASE SHALL BE SLOPED A MINIMUM OF 2% TO DRAIN AWAY FROM POST.

United States Department of Agriculture
Forest Service

R4
INTERMOUNTAIN REGION

STAMPS, LOGOS, AND SEALS

| NO. | REVISION / ISSUE | DATE |
|---|---|---|
| 4 | | |
| 3 | | |
| 2 | | |
| 1 | | |

PROJECT NAME

GAOA KENTS LAKE CAMPGROUND RECONSTRUCTION PROJECT

FISHLAKE NATIONAL FOREST

BEAVER RANGER DISTRICT

DRAWING TITLE

GATE INSTALLATION DETAILS

| | |
|---|---|
| DATE 02/20/2024 | ARCHIVE NO. |
| DESIGNER D. WEWER | DRAWING SHEET NO. R14 |
| DRAWN D. WEWER | |
| CHECKED R. ANDERSON | |
| PROJECT NO. | SHEET 40 OF 49 |

2/4/26 11:17 NATHANROBINSON C:\USERS\NATHANROBINSON\BOXENG\DESIGN\FISHLAKE\KENTS LAKE CAMPGROUND.20231\DWG\38 R12-40 R14_KENTS LAKE GATES.DWG;

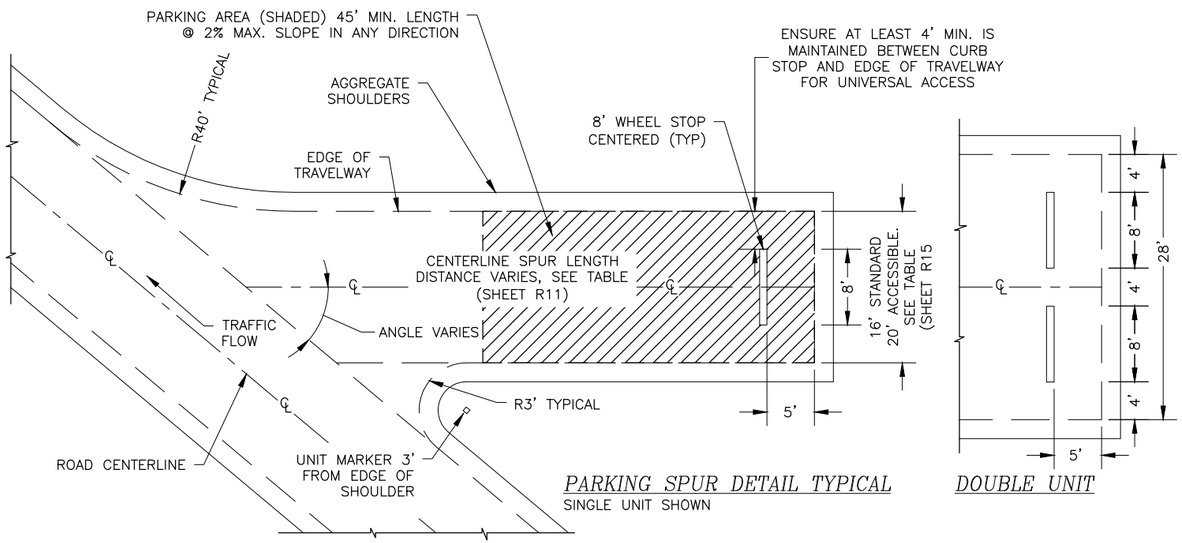


PARKING SPUR DETAIL TYPICAL
SINGLE UNIT SHOWN




DOUBLE UNIT

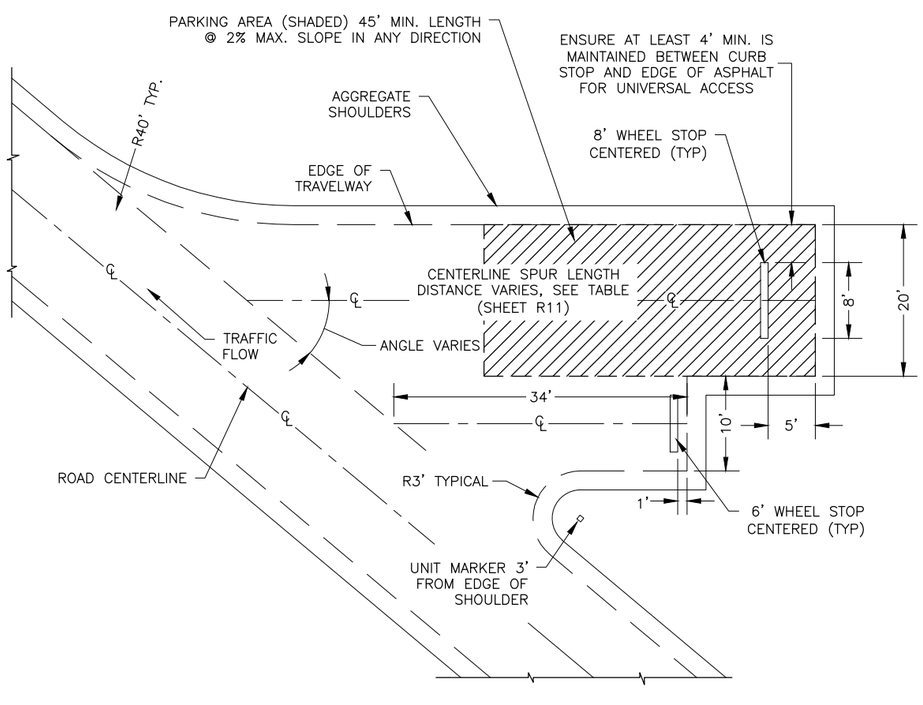


PARKING SPUR WITH PARKING DETAIL TYPICAL (HOST UNIT)
SINGLE UNIT SHOWN

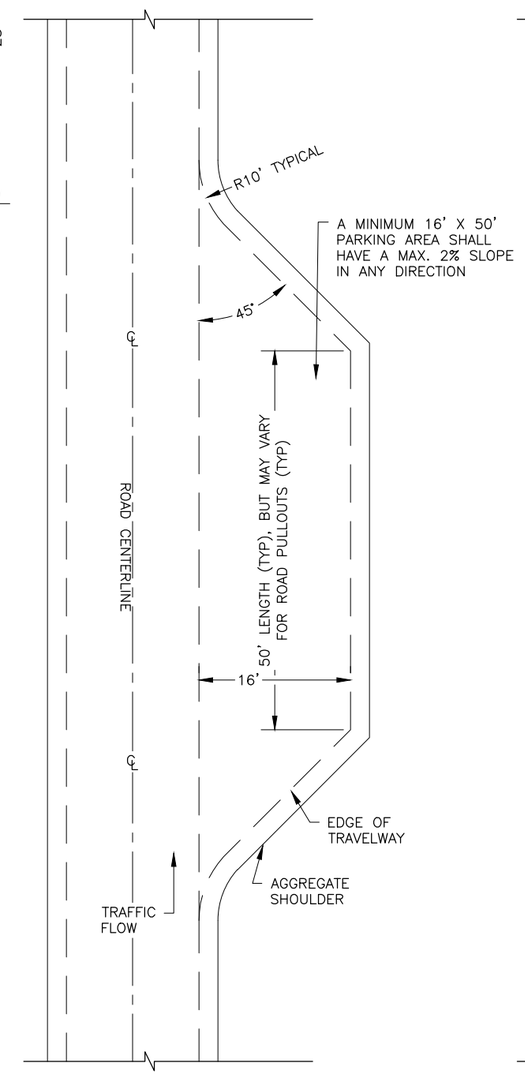


TURN OUTS AND PULL OUTS

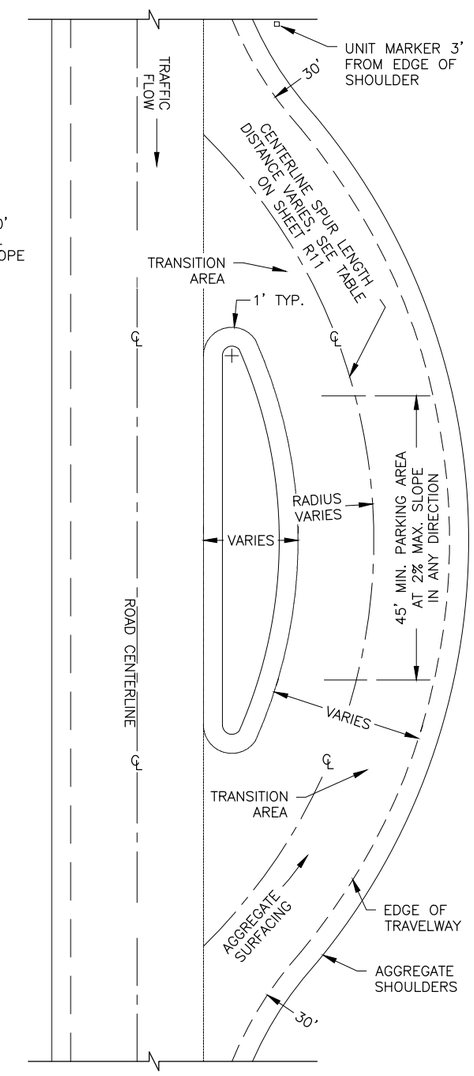


PULL THROUGH SPUR

United States Department of Agriculture
Forest Service

**R4**
**INTERMOUNTAIN REGION**

STAMPS, LOGOS, AND SEALS

| NO. | REVISION / ISSUE | DATE |
|---|---|---|
| 4 | | |
| 3 | | |
| 2 | | |
| 1 | | |

PROJECT NAME

**GAOA KENTS LAKE CAMPGROUND RECONSTRUCTION PROJECT**

**FISHLAKE NATIONAL FOREST**

**BEAVER RANGER DISTRICT**

DRAWING TITLE

**TYPICAL SPUR SECTION AND DETAILS**

| | |
|---|---|
| DATE 02/20/2024 | ARCHIVE NO. |
| DESIGNER J. REDHOUSE | DRAWING SHEET NO. R15 |
| DRAWN J. REDHOUSE | |
| CHECKED R. ANDERSON | |
| PROJECT NO. | SHEET 41 OF 49 |

2/4/26 12:56 NATHANROBINSON C:\USERS\NATHANROBINSONBOXIEN\DESIGN\FISHLAKE\KENTS.LAKE.CAMPGROUND.2023\DWG\41 R15 - 42 R16 .KENTS.LAKE.SPURS.DWG;

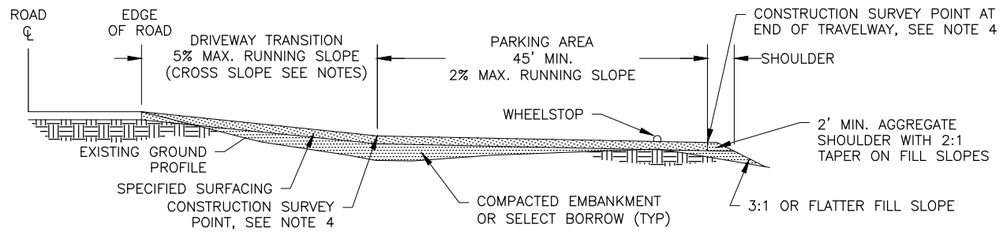


PARKING SPUR PROFILE IN FILL SECTION

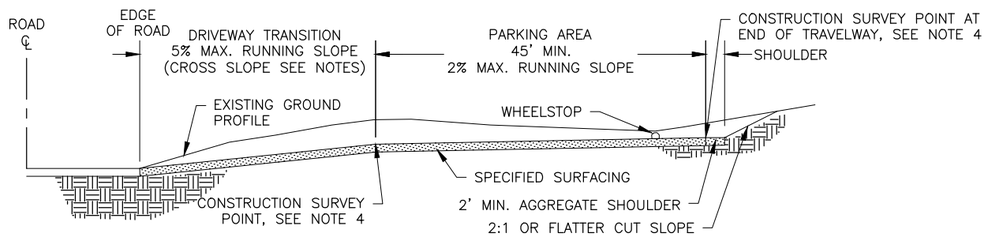


PARKING SPUR PROFILE IN CUT SECTION

*TYPICAL CAMPING UNIT SPUR GRADING PROFILE*

PULL THROUGHS SIMILAR – NO SCALE

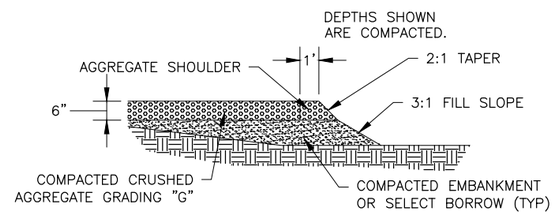


*SPUR SURFACING PROFILE*

NO SCALE

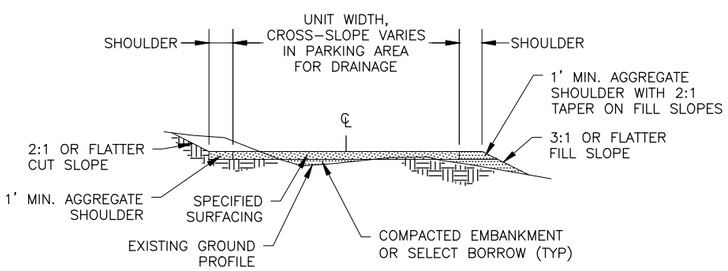


*TYPICAL PARKING SPUR CROSS SECTION*

NO SCALE

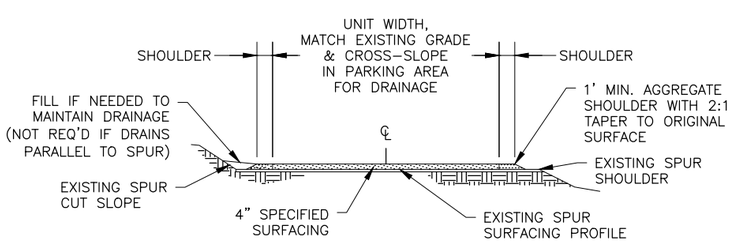


*TYPICAL SPUR RESURFACING CROSS SECTION*

NO SCALE

PARKING SPUR TABLE

| SPUR # | CENTERLINE LENGTH | TRAVELWAY WIDTH | CROSS SLOPE | ~BORROW CUT (CY) | ~BORROW FILL (CY) | ~CRUSHED AGG. FILL (CY) |
|---|---|---|---|---|---|---|
| 1A (HOST) | 58 | 20 | 2% R | 33.58 | 0 | 24.62 |
| 1B (HOST) | 38 | 10 | 2% R | 11.17 | 0 | 4.52 |
| 2 | 60 | 20 | 2% L | 14.48 | 5.45 | 25.33 |
| 3 | 69 | 16 | 2% L | 55.79 | 2.83 | 29.05 |
| 4 | 196 | 16 | 2% L | 794.61 | 55.02 | 80.74 |
| 5 | 60 | 20 | 2% R | 34 | 5.55 | 30.67 |
| 6 | 60 | 16 | 2% R | 25.39 | 0.55 | 25.33 |
| 7 | 56 | 32 | 2% L | 180.21 | 0 | 36 |
| 8 | 60 | 16 | 2% R | 140.01 | 0 | 25 |
| 9 | 69 | 16 | 2% L | 17.32 | 5.02 | 29.05 |
| 10 | 60 | 16 | 2% R | 105.58 | 0.86 | 25.33 |
| 11 | 60 | 20 | 2% R | 14.14 | 10.28 | 13.38 |
| 12 | 69 | 16 | 2% R | 57.22 | 0 | 29.05 |
| 13 | 110 | 16 | 2% L | 3.56 | 169.47* | 45.47 |
| 14 | 69 | 16 | 2% R | 97.62 | 0.86 | 29.05 |
| 15 | 69 | 16 | 2% R | 73.05 | 0.83 | 29.05 |
| 16 | 69 | 16 | 2% R | 129.47 | 3.03 | 29.05 |
| 17 | 69 | 16 | 2% R | 83.06 | 4.76 | 29.05 |
| 18 | 116 | 16 | 2% L | 452.51 | 1.38 | 48.28 |
| 19 | 110 | 16 | 2% L | 193.76 | 17.47 | 45.36 |
| 20 | 110 | 16 | 2% R | 15.66 | 63.24 | 45.58 |
| 21 | 114 | 16 | 2% R | 9.15 | 323.47* | 47.26 |
| 22 | 60 | 20 | 2% L | 7.88 | 25.13 | 25.33 |
| 23 | 60 | 16 | 2% L | 3.61 | 145.28* | 25.33 |
| 24 | 60 | 16 | 2% L | 15.46 | 21.19 | 25.33 |
| 25 | 60 | 16 | 2% L | 2.7 | 214.02* | 25.33 |
| 26 | 60 | 16 | 2% L | 17.92 | 1.84 | 25.33 |
| 27 | 60 | 16 | 2% L | 2.16 | 318.69 | 25.33 |
| 28 | 60 | 16 | 2% L | 11.83 | 6.00 | 25.33 |
| 29 | 60 | 16 | 2% L | 4.4 | 177.44* | 25.33 |
| 30 | 60 | 16 | 2% L | 14.65 | 2.74 | 25.33 |
| 31 | 60 | 20 | 2% L | 13.28 | 10.28 | 25.33 |
| PARKING NEAR 7 | 30 | 39 | 2% L | 31.1 | 0.56 | 20 |
| PARKING WEST | 20 | 30 | 2% L | 34.14 | 15.67 | 15.55 |
| PARKING NEAR ENTRANCE | 22.5 | 26 | 2% L | 0.67 | 3.77 | 2.61 |

SPUR NOTES:

1. THE DESIGN OF EACH SPUR IS INTENDED TO FIT THE SURROUNDING TOPOGRAPHY, MINIMIZE CUT/FILL AND MEET ACCESSIBILITY REQUIREMENTS. THE SPUR CENTERLINE ELEVATION MAY BE ADJUSTED IN THE FIELD TO BETTER MATCH THE SITE, IF APPROVED BY THE CONTRACTING OFFICER. GRADE MAXIMUMS FOR SPURS MAY BE MODIFIED WITH CONTRACTING OFFICER APPROVAL TO THE FOLLOWING:
   a. THE PARKING AREA FROM THE REAR OF THE SPUR TOWARDS THE CENTERLINE OF THE CAMPGROUND ROAD MAY BE INCREASED TO 2% MAXIMUM. IN ORDER TO MEET ACCESSIBILITY REQUIREMENTS, THE PARKING AREA MAY NOT EXCEED 2% IN ANY DIRECTION.
   b. THE DRIVEWAY TRANSITION OF EACH SPUR SHALL BE INSTALLED AT THE FLATTEST GRADE POSSIBLE. TYPICALLY THE DRIVEWAY WILL HAVE A RUNNING SLOPE OF 5% OR LESS. DRIVEWAY RUNNING SLOPES CAN BE INCREASED TO 8.33% FOR UP TO 50' OR UP TO 10% FOR 30 FEET.
2. CONSTRUCT SHOULDERS OF COMPACTED CRUSHED AGGREGATE MATERIAL (GRADING "G") ON SIDES AND BACK, SEE SPUR SURFACING DETAIL.
3. REFER TO "S" SHEETS AND SHEETS R2–R9 FOR SPUR NUMBERS LISTED IN THE CAMPGROUND SPUR TABLE.
4. CONSTRUCTION SURVEY POINTS FOR SPURS CONSIST OF TWO CENTERLINE POINTS:
   1. BEGINNING OF PARKING AREA (RECONSTRUCTED SPURS ONLY)
   2. AT INTERSECTION WITH EDGE OF ROADWAY (RESURFACED SPURS ONLY)
   3. END OF SPUR/END OF PARKING AREA.

   THE SURVEYOR/CONTRACTOR SHALL DETERMINE WHERE THE SPUR CONNECTS TO THE ROADWAY USING THESE TWO POINTS. DRAWING A STRAIGHT LINE BETWEEN THESE TWO POINTS WILL DEVELOP A BEARING THAT CONNECTS TO THE ROADWAY. ALL CONSTRUCTION SURVEY POINTS ARE FINISHED GRADE. ADDITIONAL POINTS WILL BE INDICATED FOR ANY REQUIRED GRADE BREAKS.
5. BORROW SHALL BE OBTAINED FROM EXCESS EXCAVATION FROM CONSTRUCTION OF ROADS AND SPURS. ADDITIONAL BORROW IF NEEDED MAY BE OBTAINED FROM AN APPROVED (COMMERCIAL–SOURCE) BORROW PIT.
6. WHERE POSSIBLE AND PRACTICAL, UTILIZE EXISTING AGGREGATE BASE WHEN THE EXISTING SPUR SURFACE IS BELOW NEW FINISH GRADE ROAD SURFACE AND ABOVE SUBGRADE ELEVATION. IN SUCH CASES, TOP EXISTING SURFACE WITH SUFFICIENT BASE TO MEET NEW FINISH GRADE. IN NO CASE SHALL FINAL BASE DEPTH BE LESS THAN 6 INCHES. SEE SHEET R9 FOR SECTION DETAIL.

United States Department of Agriculture
Forest Service

R4
INTERMOUNTAIN REGION

STAMPS, LOGOS, AND SEALS

| NO. | REVISION / ISSUE | DATE |
|---|---|---|
| 4 | | |
| 3 | | |
| 2 | | |
| 1 | | |

PROJECT NAME

**GAOA KENTS LAKE CAMPGROUND RECONSTRUCTION PROJECT**

**FISHLAKE NATIONAL FOREST**

**BEAVER RANGER DISTRICT**

DRAWING TITLE

**TYPICAL SPUR SECTION AND DETAILS CONT'D.**

| | |
|---|---|
| DATE 02/20/2024 | ARCHIVE NO. |
| DESIGNER J. REDHOUSE | DRAWING SHEET NO. R16 |
| DRAWN J. REDHOUSE | |
| CHECKED R. ANDERSON | |
| PROJECT NO. | SHEET 42 OF 49 |

2/4/26 12:56 NATHANROBINSON C:\USERS\NATHANROBINSON\BOXENG\DESIGN\FISHLAKE\KENTS LAKE CAMPGROUND 2023\DWG\41 R15-42 R16_KENTS LAKE-SPURS.DWG;

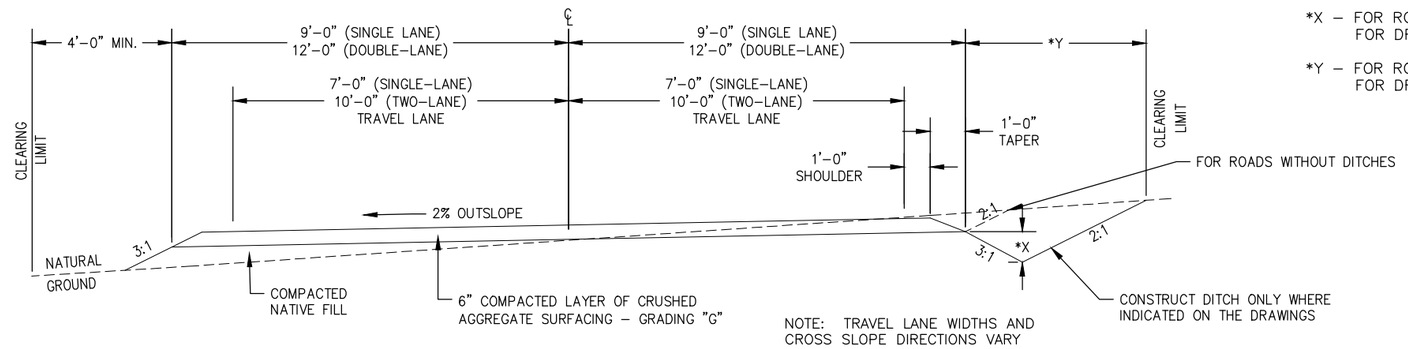


## TYPICAL ONE OR TWO-LANE AGGREGATE SURFACE ROAD SECTION

DITCH NOTES:

*X – FOR ROADSIDE DITCHES, DEPTH WILL BE 2FT DEEP
FOR DRAINAGE DITCHES, DEPTH WILL BE 3FT DEEP

*Y – FOR ROADSIDE DITCHES, WIDTH WILL BE 4FT WIDE
FOR DRAINAGE DITCHES, WIDTH WILL BE 12FT WIDE

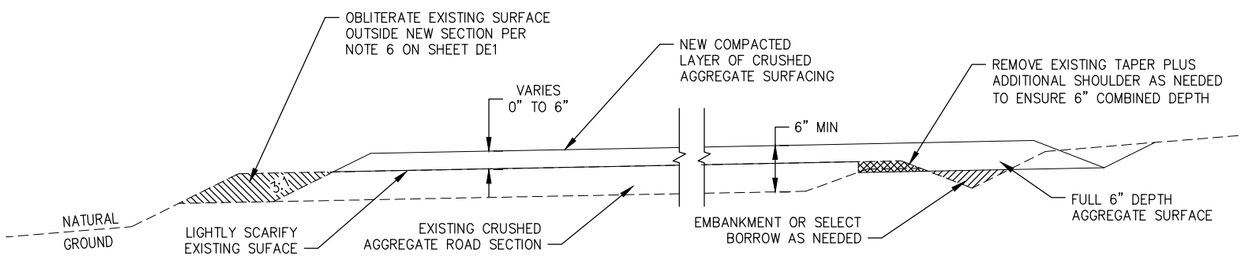


## TYPICAL ROAD SECTION UTILIZING EXISTING AGGREGATE SURFACE

NOTES:

1. TRANSITIONS BETWEEN CROSS SECTIONS SHALL BE GRADUAL. TRANSITIONS SHALL BE 50' IN LENGTH, 25' ON EACH SIDE OF TRANSITIONING ROADWAYS.
2. ALL EXCAVATED BOULDERS TO BE PLACED FOR EROSION CONTROL SHALL BE PLACED AS DESIGNATED BY THE CONTRACTING OFFICER. NEATLY PLACE ANY SURPLUS EXCAVATED ROCK TO ARMOR FILL SLOPES FROM EROSION AND FOOT TRAFFIC.
3. PLACE SALVAGED TOPSOIL (2" MINIMUM DEPTH) ON ALL 2:1 CUT SLOPES TO AID IN REVEGETATION.
4. SEE PROFILES ON ROAD SHEETS (R2 TO R8) FOR DITCH INFORMATION.
5. WHERE NO DITCH IS INDICATED ON THE PLAN AND PROFILE DRAWINGS, ENSURE THAT WATER WILL NOT POND ALONG THE EDGE OF THE ROAD. GRADE EDGE OF ROAD SO WATER WILL SHEET FLOW ACROSS THE ROAD.
6. WHERE POSSIBLE AND PRACTICAL, UTILIZE EXISTING AGGREGATE BASE WHEN THE EXISTING ROAD SURFACE IS BELOW NEW FINISH GRADE ROAD SURFACE AND ABOVE SUBGRADE ELEVATION. IN SUCH CASES, TOP EXISTING SURFACE WITH SUFFICIENT BASE TO MEET NEW FINISH GRADE. IN NO CASE SHALL FINAL BASE DEPTH BE LESS THAN 6 INCHES.
7. ALL AGGREGATE DEPTHS SHOWN ARE COMPACTED DEPTHS.
8. ROADWAY WIDTHS AND CROSS SLOPE VARY. SEE PROFILE SHEETS FOR ROADWAY WIDENING AND CROSS SLOPE DIRECTIONS.
9. UNLESS OTHERWISE NOTED: ALL CUT SLOPES SHALL BE 2:1 AND ALL FILL SLOPES SHALL BE 3:1.
10. CROSS-SECTIONS SHOWN ON THIS SHEET APPLY TO ALL ROADS, PARKING AREAS, PULLOUTS AND SPURS.

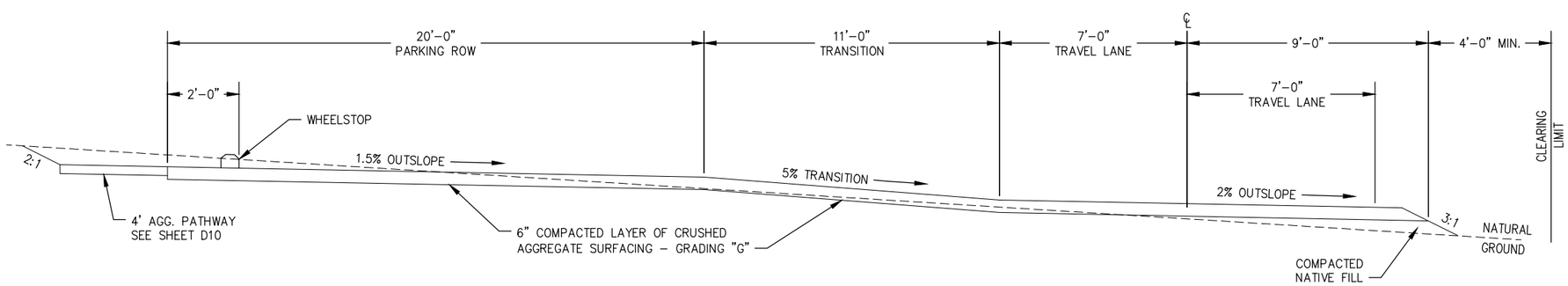


## ONE-LANE AGGREGATE SURFACE ROAD AND PARKING SECTION
## (TYPICAL OF GROUP SITES "B" AND "C")

United States Department of Agriculture
Forest Service

R4
INTERMOUNTAIN REGION

STAMPS, LOGOS, AND SEALS

| NO. | REVISION / ISSUE | DATE |
|---|---|---|
| 4 | | |
| 3 | | |
| 2 | | |
| 1 | UPDATED DITCH DIMENSIONS | 05/29/2025 |

PROJECT NAME

**GAOA KENTS LAKE CAMPGROUND RECONSTRUCTION PROJECT**

**FISHLAKE NATIONAL FOREST**

**BEAVER RANGER DISTRICT**

DRAWING TITLE

**TYPICAL ROAD AND PARKING CROSS SECTIONS**

DATE 02/20/2024
ARCHIVE NO.
DESIGNER J. REDHOUSE
DRAWN J. REDHOUSE
CHECKED R. ANDERSON
PROJECT NO.
DRAWING SHEET NO. R17
SHEET 43 OF 49

4/30/26 15:36 NATHANROBINSON C:\USERS\NATHANROBINSON\BOXENCDESIGN\FISHLAKE\KENTS.LAKE.CAMPGROUND.2023\DWG\43 R17_KENTS.LAKE.ROAD.& PARKING.SECTION.DWG;

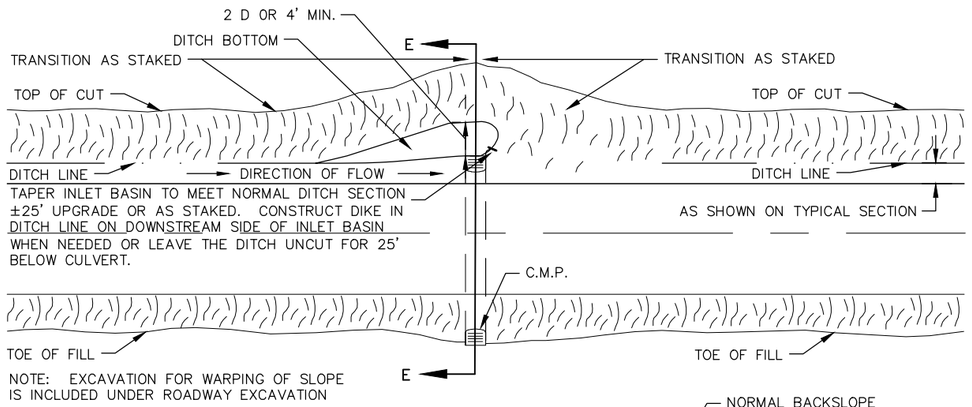


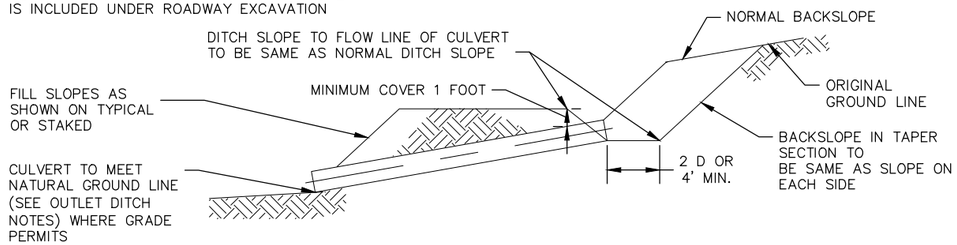


SECTION E–E
TYPICAL CULVERT INSTALLATION

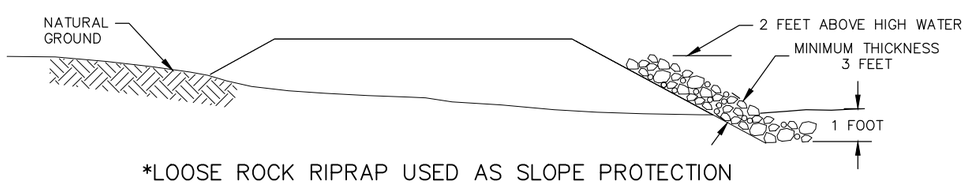


*LOOSE ROCK RIPRAP USED AS SLOPE PROTECTION

*ANY RIPRAP USED SHALL BE GATHERED FROM ONSITE AND SHOULD BE WITHIN 6 INCH TO 12INCH IN DIAMETER. NO RIRRAP SHALL BE PROVIDED AS A SEPARATE LINE ITEM WITHOUT APPROVAL FROM THE CONTRACTING OFFICER.

TYP. BEDDING DETAIL

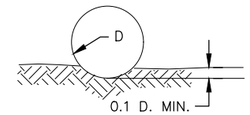


TRENCHING

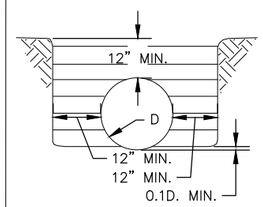


YIELDING FOUNDATION

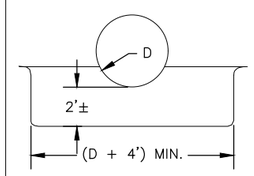


ROCK FOUNDATION

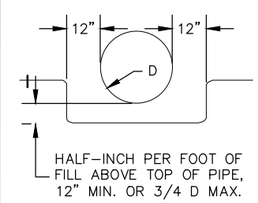


TYPICAL BACKFILL DETAIL

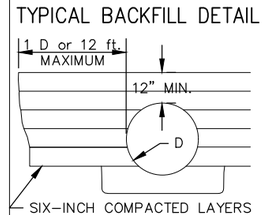


BEDDING SHALL BE SUITABLE MATERIAL, UNIFORMLY COMPACTED, AND SHAPED TO FIT THE BOTTOM OF THE PIPE.

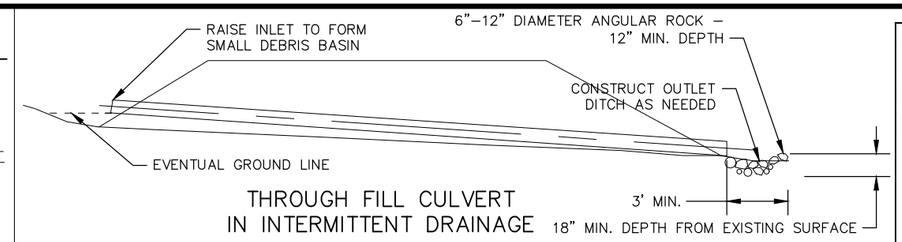


THROUGH FILL CULVERT
IN INTERMITTENT DRAINAGE

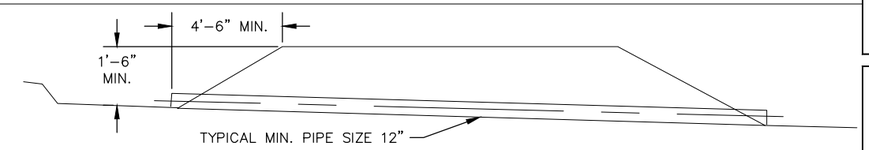


FLAT DITCH SECTION

DITCH NOTES

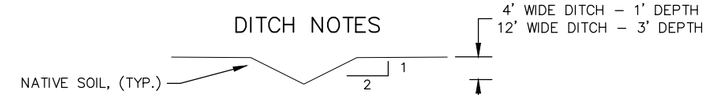


DRAINAGE DITCH WILL BE VEE BOTTOMED, WITH 2:1 SIDE SLOPES, TOPS OF SLOPES WILL BE ROUNDED TO BLEND WITH NATURAL GROUND.

(SECTION VIEW)

## GENERAL NOTES

CAMBER: PIPES SHALL BE CAMBERED AS NECESSARY TO COMPENSATE FOR ANY ANTICIPATED SETTLEMENT IN THE FOUNDATION OR BED. NORMALLY, CAMBER IS 1% OF THE PIPE LENGTH BUT NOT TO EXCEED 3/4 DIAMETER OF THE PIPE. CAMBER SHALL BE ON A PARABOLIC CURVE, WITH NO POINT ALONG THE INVERT BEING HIGHER THAN THE INVERT AT THE INLET.

FILL: A MINIMUM OF 1'0" OF COVER WILL BE REQUIRED OVER GALVANIZED STEEL PIPE. A MINIMUM FLOW GRADE OF 2% WILL BE USED IN ANY INSTALLATION, PREFERRED FLOW GRADE OF 8% WILL BE USED WHERE POSSIBLE.

TREATMENT OF DAMAGED SPELTER: THE DAMAGED OR CORRODED ENDS OF EXISTING METAL PIPE TO BE EXTENDED SHALL BE REMOVED. IF THE DAMAGED END IS FLAME CUT, THE BURNED SPELTER ON THE GALVANIZED PIPE SHALL BE WIRE BRUSHED TO CLEAN METAL, AND THE AREA SHALL BE PAINTED WITH TWO COATS OF PAINT, HIGH IN ZINC CONTENT, FOR REPAIR OF THE GALVANIZED SURFACES.

RIPRAP: RIPRAP USED ON CULVERT INLETS AND OUTLETS SHALL BE ACCORDING TO SECTION 321206, UNLESS OTHERWISE NOTED.

INVERT ELEVATIONS: SEE CONSTRUCTION POINTS ON SHEETS R2–R10.

MAIN CAMPGROUND LOOP ROAD – CULVERT INSTALLATION TABLE

| | LOCATION | STATION | DIA. | LF | INLET CATCH BASIN | OUTLET DITCH |
|---|---|---|---|---|---|---|
| 1 | MAIN LOOP | 7+07 | 24" | 40' | YES | YES |
| 2 | SPUR 8 | 0+20 | 18" | 40' | YES | YES |
| 3 | SPUR 10 | 0+41 | 18" | 30' | YES | YES |
| 4 | MAIN LOOP | 10+83 | 24 | 40' | YES | YES |
| 5 | MAIN LOOP | 16+22 | 24" | 40' | YES | YES |
| 6 | MAIN LOOP | 16+24 | 24" | 40' | YES | YES |
| 7 | MAIN LOOP | 19+16 | 24" | 40' | YES | YES |
| 8 | MAIN LOOP | 21+04 | 24" | 40' | YES | YES |
| 9 | MAIN LOOP | 32+42 | 24" | 40' | YES | YES |
| 10 | SPUR 31 | 0+15 | 18" | 50' | YES | YES |
| 11 | PATH TO RESTROOM | 0+39 | 12" | 20' | YES | YES |
| 12 | 24' SECTION | 1+09 | 24" | 50 | YES | YES |
| 13 | 24' SECTION | 1+11 | 24" | 50' | YES | YES |
| 14 | 14' SECTION | 1+12 | 24" | 30' | YES | YES |
| 15 | 14' SECTION | 2+54 | 24' | 30' | YES | YES |
| 16 | 14' SECTION | 4+54 | 24" | 30' | YES | YES |

United States Department of Agriculture
Forest Service

R4
INTERMOUNTAIN REGION

STAMPS, LOGOS, AND SEALS

| NO. | REVISION / ISSUE | DATE |
|---|---|---|
| 4 | | |
| 3 | | |
| 2 | | |
| 1 | UPDATED DIMENSIONS | 05/29/2025 |

PROJECT NAME
GAOA
KENTS LAKE
CAMPGROUND
RECONSTRUCTION
PROJECT

FISHLAKE NATIONAL FOREST

BEAVER RANGER DISTRICT

DRAWING TITLE
CULVERT DETAILS

DATE 02/03/2024
ARCHIVE NO.
DESIGNER J. REDHOUSE
DRAWN J. REDHOUSE
CHECKED R. ANDERSON
PROJECT NO.
DRAWING SHEET NO. R18
SHEET 44 OF 49

4/30/26 15:35 NATHANROBINSON C:\USERS\NATHANROBINSON\BOXENGDESIGN\FISHLAKE\KENTS.LAKE.CAMPGROUND.2023\DWG\44 R18_KENTS.LAKE.CULVERTS.DWG;

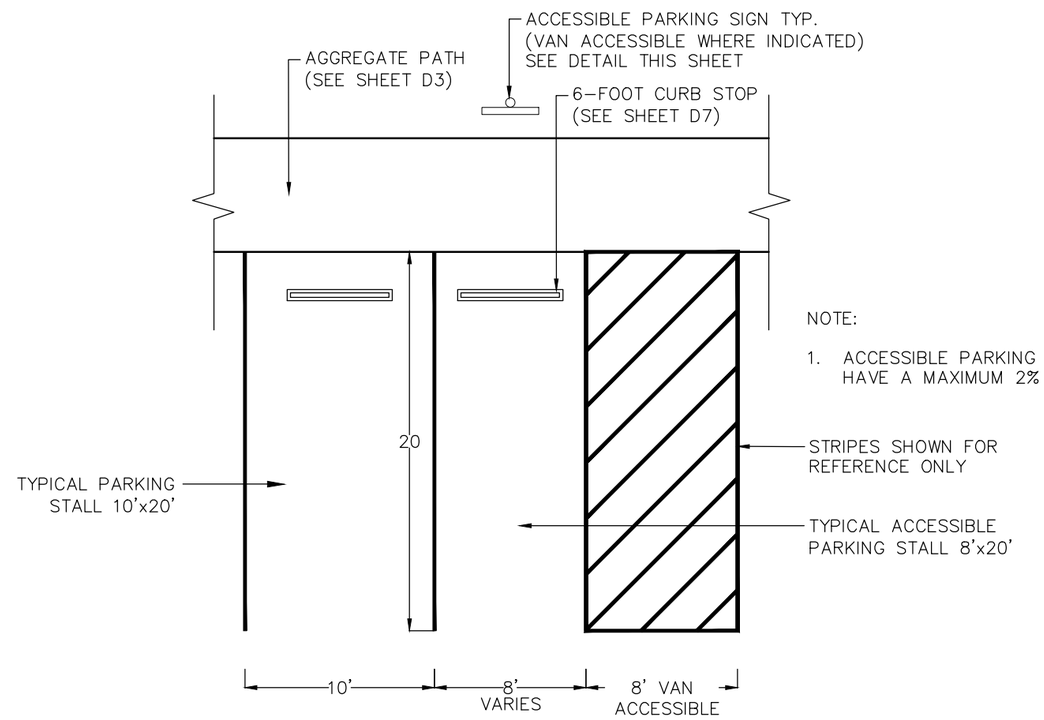


NOTE:

1. ACCESSIBLE PARKING STALLS SHALL HAVE A MAXIMUM 2% CROSS SLOPE.

## ACCESSIBLE PARKING STALL AND TYPICAL PARKING STALL LAYOUT

United States Department of Agriculture
Forest Service

R4
INTERMOUNTAIN REGION

STAMPS, LOGOS, AND SEALS

| NO. | REVISION / ISSUE | DATE |
|---|---|---|
| 4 | | |
| 3 | | |
| 2 | | |
| 1 | | |

PROJECT NAME

**GAOA KENTS LAKE CAMPGROUND RECONSTRUCTION PROJECT**

FISHLAKE NATIONAL FOREST

BEAVER RANGER DISTRICT

DRAWING TITLE

**ACCESSIBLE AND TYPICAL PARKING STALL LAYOUT DETAILS**

| | |
|---|---|
| DATE 02/20/2024 | ARCHIVE NO. |
| DESIGNER R.BUDGE | DRAWING SHEET NO. R19 |
| DRAWN R.BUDGE | |
| CHECKED R. ANDERSON | |
| PROJECT NO. | SHEET 45 OF 49 |

2/10/26 15:57 NATHANROBINSON C:\USERS\NATHANROBINSON\BOX\ENGDESIGN\FISHLAKE\KENTS LAKE CAMPGROUND 2023\DWG\45 R19_KENTS LAKE PARKING STALL LAYOUT.DWG;

LEGEND:

EXISTING WATER HYDRANT

NEW WATER HYDRANT

EXISTING WATER LINE

NEW WATER LINE

EXISTING WATER VALVE

NEW WATER VALVE

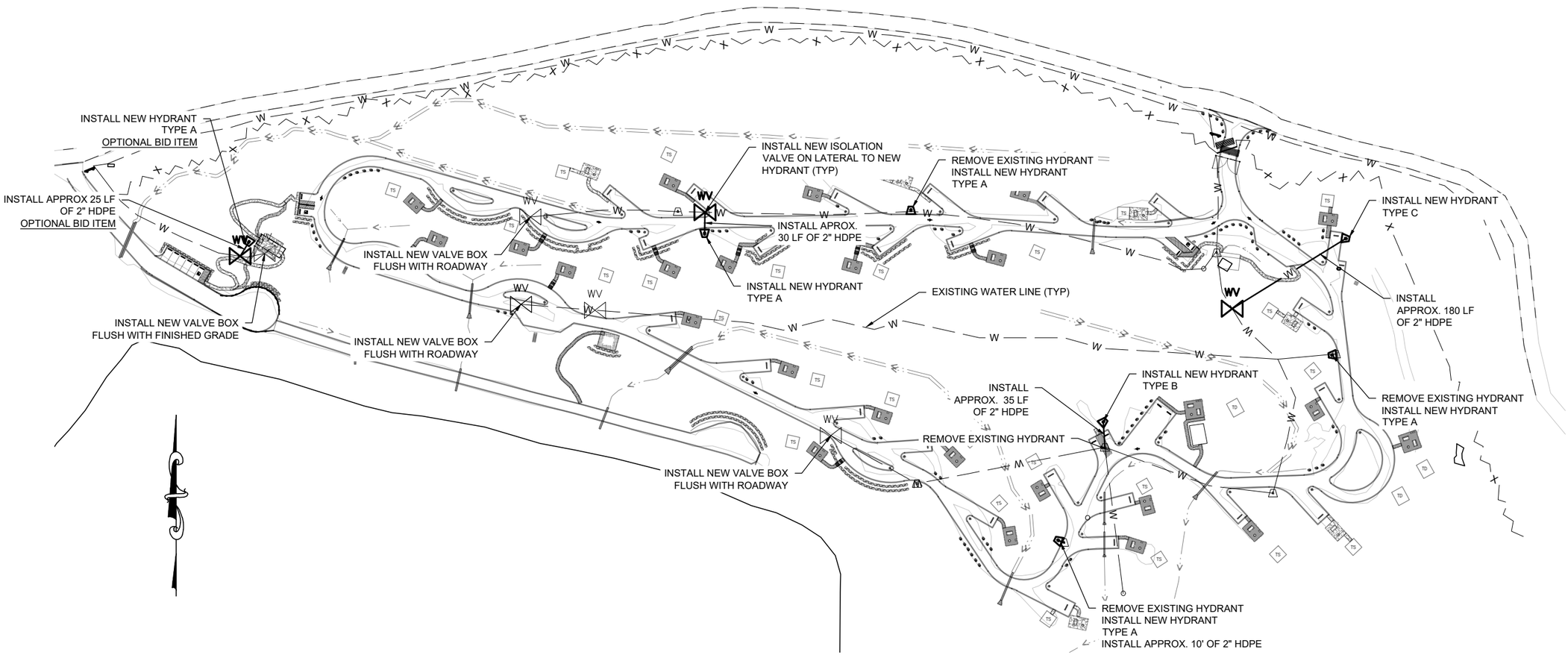


United States Department of Agriculture
Forest Service

R4
INTERMOUNTAIN REGION

STAMPS, LOGOS, AND SEALS

| NO. | REVISION / ISSUE | DATE |
|---|---|---|
| 4 | | |
| 3 | | |
| 2 | | |
| 1 | UPDATED NOTES | 05/29/2025 |

PROJECT NAME

**GAOA KENTS LAKE CAMPGROUND RECONSTRUCTION PROJECT**

**FISHLAKE NATIONAL FOREST**

**BEAVER RANGER DISTRICT**

DRAWING TITLE

**WATER SYSTEM OVERVIEW**

| | |
|---|---|
| DATE 03/21/2025 | ARCHIVE NO. |
| DESIGNER J. REDHOUSE | DRAWING SHEET NO. W1 |
| DRAWN J. REDHOUSE | |
| CHECKED R. ANDERSON | |
| PROJECT NO. | SHEET 46 OF 49 |

4/30/26 15:36 NATHANROBINSON C:\USERS\NATHANROBINSON\BOX\ENGDESIGN\FISHLAKE\KENTSLAKE.CAMPGROUND.2023\DWG\2' R1-37 R11_KENTSLAKE ROADWAYS.DWG;

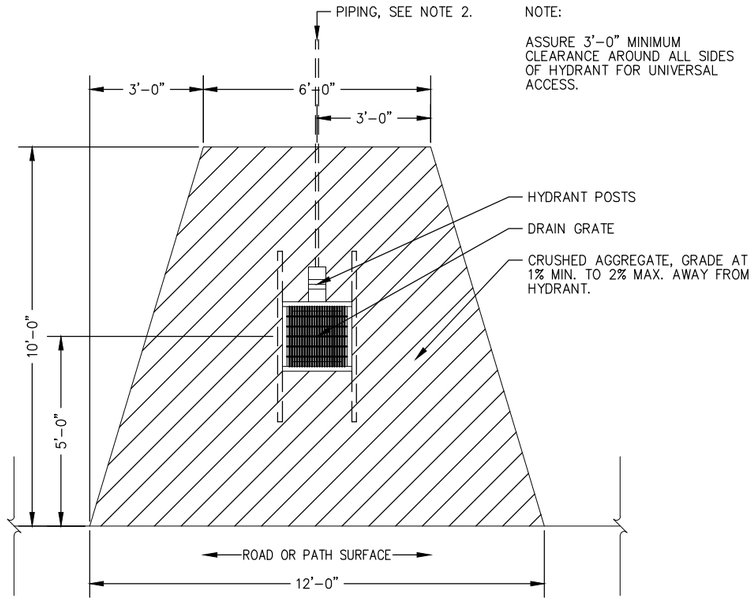


NOTE:

ASSURE 3'-0" MINIMUM CLEARANCE AROUND ALL SIDES OF HYDRANT FOR UNIVERSAL ACCESS.

## HYDRANT PAD DETAIL

NOTES:

1. HYDRANT TYPES INCLUDE:
   TYPE A – A SELF-CLOSING FAUCET.
   TYPE B – A SELF-CLOSING FAUCET AND HOSE BIBB WITH BACKFLOW PREVENTER.
   TYPE C – TWO HOSE BIBBS, UPPER BIBB WITH VACUUM BREAKER, LOWER BIBB WITH BACKFLOW PREVENTER.
2. ALIGN THE PIPING AT BOTTOM OF HYDRANT AS NECESSARY TO OBTAIN PROPER ORIENTATION OF HYDRANT AS SHOWN ON THE WATER SYSTEM DRAWINGS.
3. HYDRANT LOCATION SHALL BE AS STAKED IN THE FIELD OR AS SHOWN ON THE DRAWINGS. ALTER HYDRANT LOCATION OR PAD SIZE ONLY WITH APPROVAL FROM THE CONTRACTING OFFICER.
4. ELEVATION OF EDGE OF PAD OR GRAVEL SUMP SHALL BE THE SAME AS ADJACENT FINISHED SURFACE OF EDGE OF ROAD, SPUR, OR TRAIL.
5. HYDRANT PADS MAY BE IN CUT OR FILL ALONG SIDE OF ROADWAY. CUT AND FILL SLOPES SHALL MATCH ADJACENT ROADSIDE SLOPES.
6. CONSTRUCT TIMBER FRAME BOX USING ANODIZED GRABBER SCREWS (2 EACH CORNER). SECURE FRAME BOX TO HYDRANT POST WITH ANODIZED GRABBER SCREWS (2 PLACES).
7. HYDRANT POSTS AND ALL WOOD FRAMING SHALL BE CONTRUCTED OF TREATED HEM-FIR.
8. DRILLED HOLES THROUGH POSTS SHALL BE CHISELED OUT TO ACCOMMODATE RIDGES ON FITTINGS.
9. BUILD HYDRANT AS SHOWN OR AS ALTERED BY THE CONTRACTING OFFICER. SELF-CLOSING FAUCET HEIGHT ABOVE FINISH GRADE MUST BE 28" MINIMUM TO 36" MAXIMUM FOR UNIVERSAL ACCESS.

## MATERIAL SCHEDULE

| REF. NO. | HYDRANT TYPE | ITEM | DESCRIPTION |
|---|---|---|---|
| 1 | A & B | ½" SELF-CLOSING FAUCET | ½" HAWS MODEL 6252EHLF WITH SELF-CLOSING LEVER HANDLE |
| 2 | B & C | ½" HOSE BIBB WITH REMOVABLE KEY | ½" ARROWHEAD MODEL 253BFPLK (ROUGH BRASS FINISH) |
| 3 | A, B & C | ¾" STOP VALVE WITH REMOVABLE KEY | ¾" MUELLER H-10284 STOP AND DRAIN VALVE WITH LOOSE KEY |
| 4 | A, B & C | DRAIN GRATE | 8P2 1/2"x2" O.C. PRESS-LOCKED CLOSE MESH, ADA COMPLIANT, HOT DIPPED GALVANIZED STEEL, 23 3/4" SQUARE, & 1 1/2" DEPTH WITH WELDED LUGS |
| | C | VACUUM BREAKER | WATTS NO. 8A (WHEN HOSE END LOWER THAN FAUCET AT ALL TIMES) |
| | B & C | BACKFLOW PREVENTER | WATTS SERIES 7 (WHEN CONNECTED TO PRESSURE VESSEL OR TRAILER) |
| | A, B & C | WASHED ROCK SUMP | OPEN GRADED ¼" TO 1" RANGE |

* SEE HYDRANT TYPES ABOVE

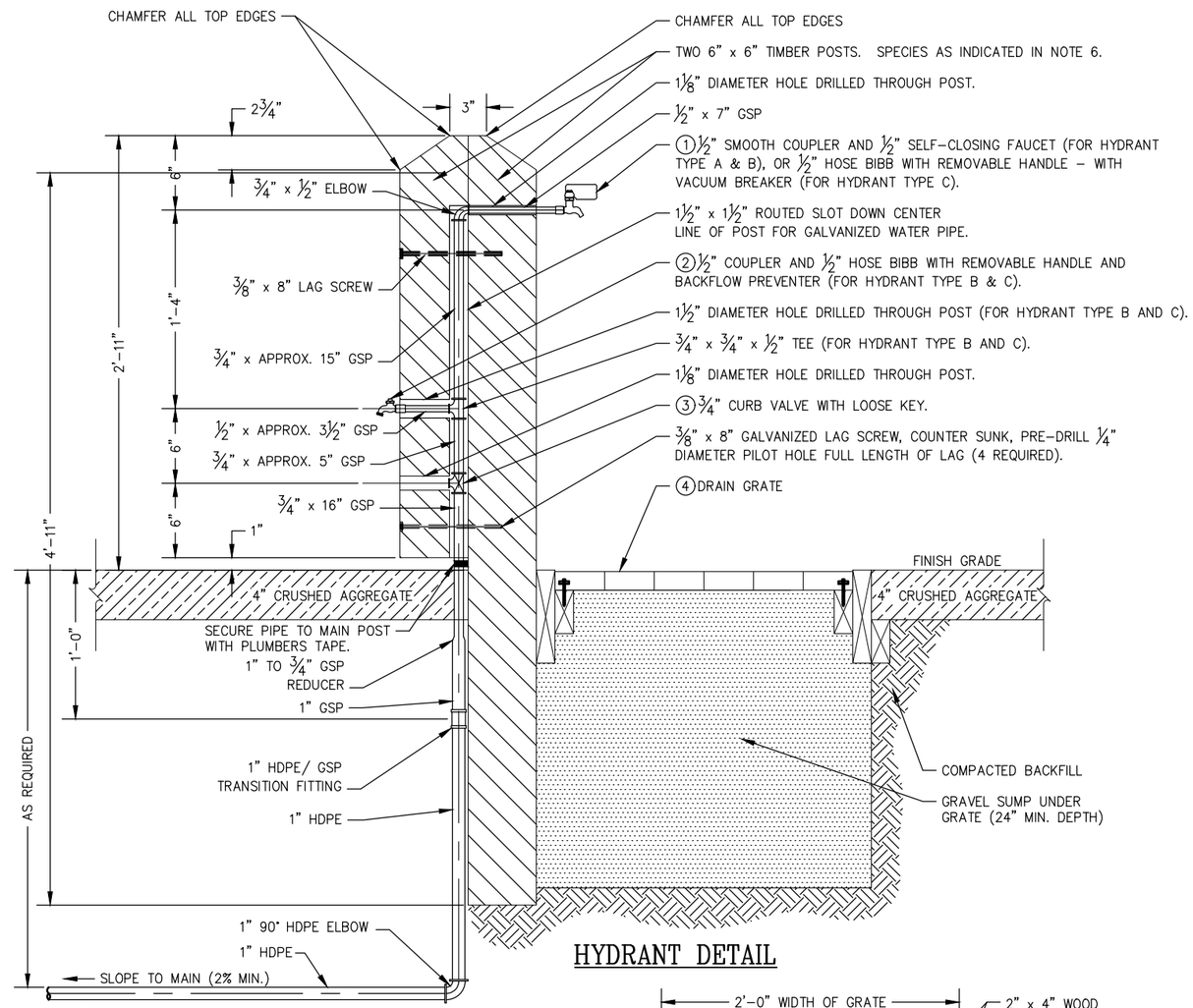


## HYDRANT DETAIL

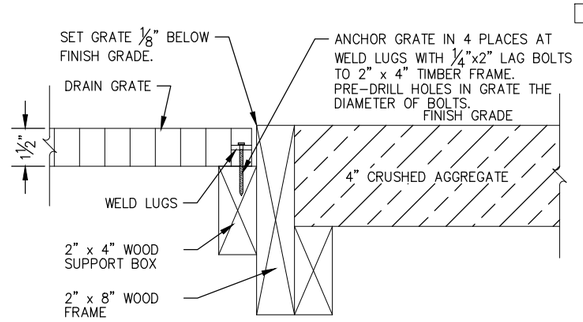


## SECTION A–A

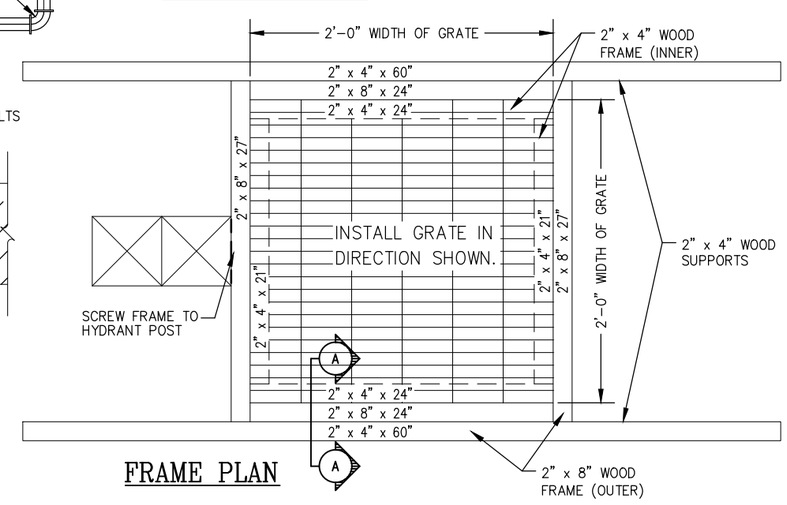


## FRAME PLAN

USDA

United States Department of Agriculture
Forest Service

R4
INTERMOUNTAIN REGION

STAMPS, LOGOS, AND SEALS

| NO. | REVISION / ISSUE | DATE |
|---|---|---|
| 4 | | |
| 3 | | |
| 2 | | |
| 1 | | |

PROJECT NAME

**GAOA KENTS LAKE CAMPGROUND RECONSTRUCTION PROJECT**

**FISHLAKE NATIONAL FOREST**

**BEAVER RANGER DISTRICT**

DRAWING TITLE

**HYDRANT DETAILS**

| | |
|---|---|
| DATE 02/20/2024 | ARCHIVE NO. |
| DESIGNER D. WEWER | DRAWING SHEET NO. W2 |
| DRAWN D. WEWER | |
| CHECKED R. ANDERSON | |
| PROJECT NO. | SHEET 47 OF 49 |

2/10/26 12:53 NATHANROBINSON C:\USERS\NATHANROBINSON\BOXE\ENGDESIGN\FISHLAKE\KENTS.LAKE.CAMPGROUND.2023\DWG\47 W2_KENTS.LAKE.HYDRANT.DWG;

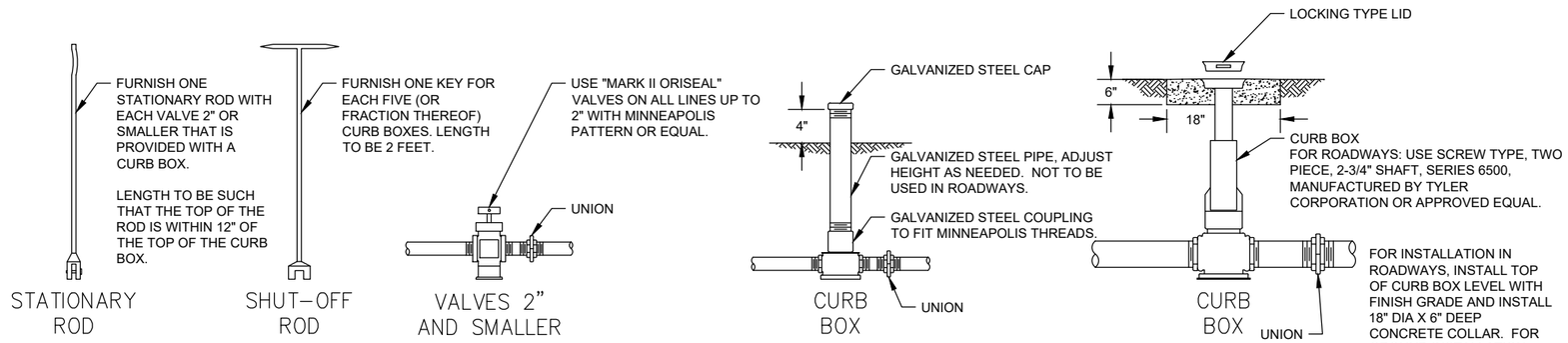


## VALVES AND CURB BOXES TWO INCHES AND SMALLER

## TRENCHING NOTES:

1. WALLS SHALL BE VERTICAL FOR TRENCHES LESS THAN 5'-0" DEEP AT CENTERLINE. FOR DEPTHS GREATER THAN 5'-0", THE WALLS SHALL BE LAID BACK TO MEET APPLICABLE SAFETY STANDARDS.
2. IF BOTTOM OF TRENCH IS UNSATISFACTORY BEDDING MATERIAL, A MINIMUM OF 6" OF PIPE-ZONE MATERIAL OR IMPORTED SPECIAL BEDDING SHALL BE USED DEPENDING ON MATERIAL ENCOUNTERED. IF SOIL IS OF A UNIFORM TEXTURE MEETING PIPE-ZONE MATERIAL SPECIFICATIONS, THIS NEED NOT BE EXCAVATED. IF FOR SEWERLINE, ROUND TRENCH SO BOTTOM HALF OF CIRCUMFERENCE OF THE PIPE WILL REST ON UNDISTURBED SOIL.
3. REQUIRED DEPTH OF BEDDING VARIES WITH TYPE OF PIPE. SEE SPECIFICATIONS TO DETERMINE IF OTHER THAN 12" IS REQUIRED OVER TOP OF PIPE.
4. IN AREAS WHERE TRENCH RESURFACING IS REQUIRED, THIS INDICATES MAXIMUM PAY WIDTH ALLOWED.
5. MAINTAIN 8" MINIMUM HORIZONTAL SEPARATION BETWEEN UTILITY LINES IN THE SAME TRENCH.
6. UTILITY LINES SHALL BE BURIED A MINIMUM OF 30 INCHES UNLESS OTHERWISE NOTED.
6. WRAP ALL BURIED, NON-METALLIC PIPE WITH TRACER WIRE. WHERE POSSIBLE, ATTACH TRACER WIRE TO OBJECTS OR STRUCTURES ABOVE GRADE (SEE SPECIFICATION SECTION 312000).
7. 24" MIN DEPTH OR DEPTH REQUIRED TO DRAIN BACK TO MAIN.

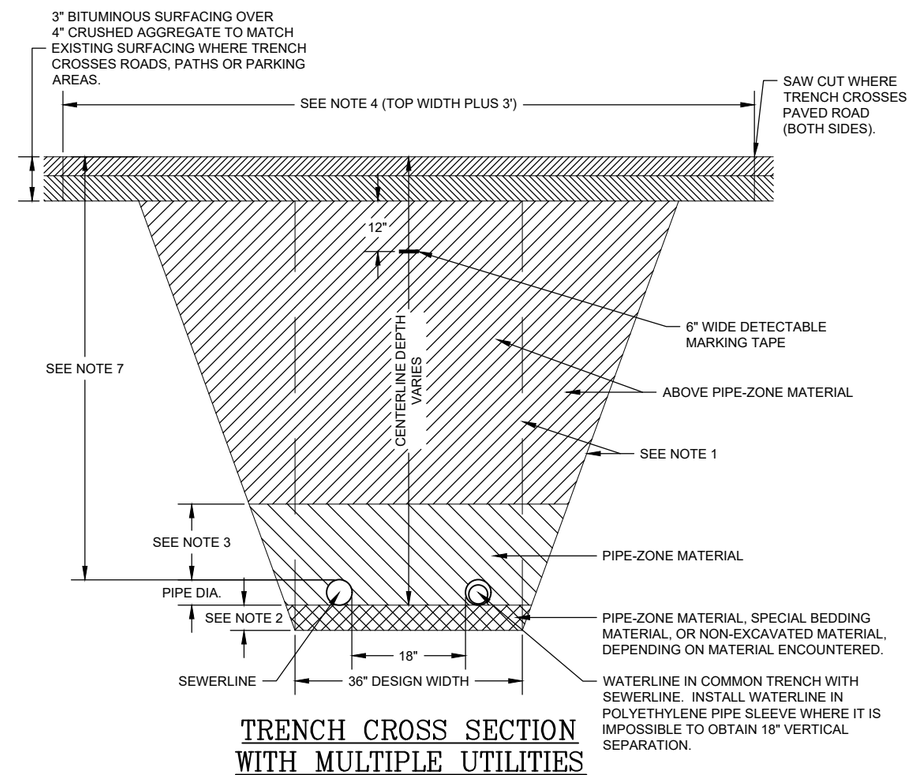


## TRENCH CROSS SECTION WITH MULTIPLE UTILITIES

NOT TO SCALE

United States Department of Agriculture
Forest Service

R4
INTERMOUNTAIN REGION

STAMPS, LOGOS, AND SEALS

APPROVED: _____ DATE: _____
DIRECTOR, ENGINEERING

| NO. | REVISION / ISSUE | DATE |
|---|---|---|
| 4 | | |
| 3 | | |
| 2 | | |
| 1 | | |

PROJECT NAME

**GAOA KENTS LAKE CAMPGROUND RECONSTRUCTION PROJECT**

**FISHLAKE NATIONAL FOREST**

**BEAVER RANGER DISTRICT**

DRAWING TITLE

**VALVE, VALVE BOX AND TRENCH DETAILS**

| | |
|---|---|
| DATE 03/21/2025 | ARCHIVE NO. |
| DESIGNER | DRAWING SHEET NO. W3 |
| DRAWN J. REDHOUSE | |
| CHECKED D.JEPPSEN | |
| PROJECT NO. | SHEET 48 OF 49 |

2/20/26 17:11 NATHANROBINSON C:\USERS\NATHANROBINSON\BOX\ENGDESIGN\FISHLAKE\KENTS.LAKE.CAMPGROUND.2023\DWG\48 W3 WATER_VALVE_BOX_TRENCH_FS_STB.DWG;

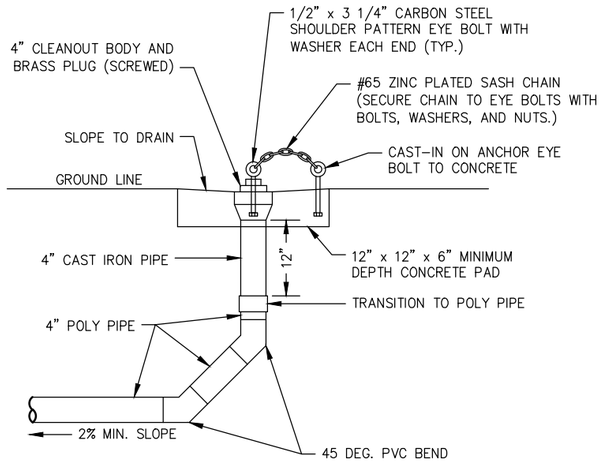


TRAILER SEWER SERVICE HOOKUP

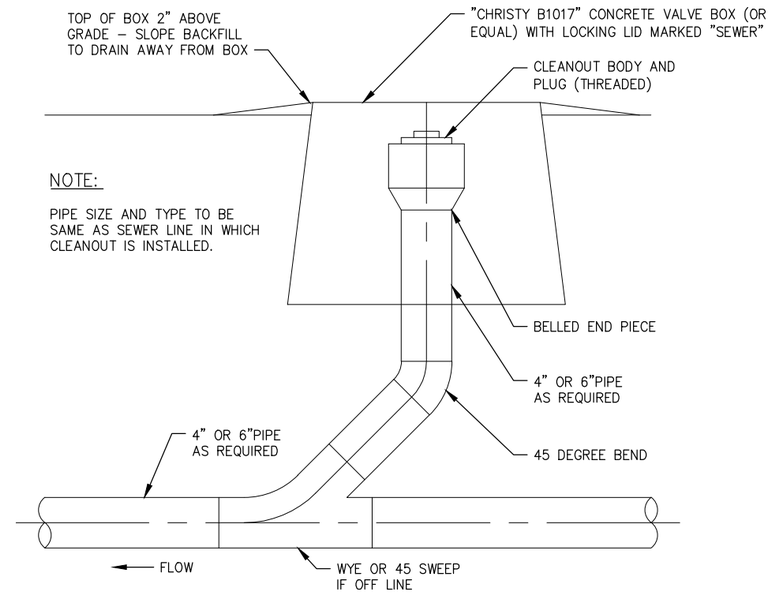


SEWER CLEANOUT FOR INSTALLATION IN NON-ROADWAY AREAS

United States Department of Agriculture
Forest Service

R4
INTERMOUNTAIN REGION

STAMPS, LOGOS, AND SEALS

| NO. | REVISION / ISSUE | DATE |
|---|---|---|
| 4 | | |
| 3 | | |
| 2 | | |
| 1 | | |

PROJECT NAME

**GAOA KENTS LAKE CAMPGROUND RECONSTRUCTION PROJECT**

**FISHLAKE NATIONAL FOREST**

**BEAVER RANGER DISTRICT**

DRAWING TITLE

**TRAILER SEWER SERVICE HOOKUP, SEWER CLEANOUT AND TANK MANWAY DETAILS**

DATE 02/20/2024
ARCHIVE NO.
DESIGNER D. WEWER
DRAWN D. WEWER
CHECKED R. ANDERSON
PROJECT NO.
DRAWING SHEET NO. **W4**
SHEET 49 OF 49

4/30/25 14:10 NATHANROBINSON C:\USERS\NATHANROBINSON\BOXEN\DESIGN\FISHLAKE\KENTS LAKE CAMPGROUND 2023\DWG\49 W4_KENTS LAKE HOSTSEWERCONNECTION.DWG;