Visual Inspections:
Ensure that any anomalies are documented with accompanying pictures and/or supporting documentation to facilitate the quality assurance and validation process.

Inspection Criteria	BLDG 466	NOTES
Power, data and communication lines are installed in a conduit and run underground at least 50 ft. before entering the facility? If the conduit is above grade before entry to the facility; the above grade portion of the conduit must be metallic and grounded. ● DOD 6055.09-M, V2.E3.6.2 ● DA PAM 385-64, 17-26.b ● AFMAN 91-201, 5.23.5 ● AFI 32-1065, 15.1 ● NAVSEA OP 5, 6-7.2	Yes	
Down conductors (if present on the inspected facility) must be secured every 3 feet or be provided with a positive means of support? ● *NFPA 780, 4.10* ● *DA PAM 385-64, 17-19.e*	Yes	
Down conductors must be protected from physical damage for a distance of 6 ft. above grade? ● *NFPA 780, 4.9.11* ● *AFI 32-1065, A4.1.8*	Yes	
Main conductor bends shall not form an angle of less than 90 degrees, and not have a radius of bend less than 8 in.? ● *NFPA 780, 4.9.5* ● *DA PAM 385-64, Table 17-4* ● *AFI 32-1065, A4.1.5*	Yes	
Above ground metallic utility lines are bonded to the structural steel or LPS before entering the facility? ● *DOD 6055.09-M, V2.E3.6* ● *DA PAM 385-64, 17-26.d* ● *AFMAN 91-201, 5.23.5* ● *AFI 32-1065, 15.2* ● *NAVSEA OP 5, 6-6.3.3*	Yes	
Nearest overhead (OH) powerline approximate distance is 50 feet or greater from structure? ● *DOD 6055.09-M, V2.E3.5* ● *DA PAM 385-64, 8.13*	Yes	

Inspection Criteria	BLDG 466	NOTES
Ground ring electrode installed around protected structure? ● *NFPA 780, 8.4.1* ● *DA PAM 385-64, 17-25* ● *AFI 32-1065, A4.1.15* ● *NAVSEA OP 5, 6-5.1*	Yes	
Ground ring electrode sized to Class II material requirements? ● *NFPA 780, 8.4.3* ● *DA PAM 382-64, 17-25* ● *AFI 32-1065, A4.1.15* ● *NAVSEA OP 5, 6-5.1*	Unknown	
Railroad tracks (if applicable) are bonded to the LPS system? ● *NFPA 780, 8.5.7* ● *DA PAM 385-64, 17-22.f* ● *NAVSEA OP 5, 6-6.3.1*	N/A	
Metallic access doors and doorframes are bonded to the ground ring electrode? ● *NFPA 780, 8.5.5.1* ● *NAVSEA OP 5, 6-6.3.4*	N/A	
Metallic fences are grounded if located within 6 ft. of protected structure or bonded to the grounding system of the structure? ● *NFPA 780, 8.8.1* ● *DA PAM 385-64, 17-22.e.* ● *NAVSEA OP 5, 6-6.3.2*	N/A	
Metallic masses within the sideflash distance are bonded to the LPS grounding? ● *NFPA 780, 8.5.2* ● *DA PAM 385-64, 17-22.b.(1)* ● *NAVSEA OP 5, 6-6*	Yes	
Facilities with perimeters larger than 300ft of structural steel not used for air terminals must use a mast or catenary type LPS? *AFI 32-1065, 14.5*	N/A	
Air terminals exceeding 24 in. in height shall require additional structural support? *NFPA 780, 4.6.2.2.2*	N/A	

Electrical Tests
Given the variability of structures and construction techniques across different locations, test techniques for evaluating lightning protection systems will be determined on a case-by-case basis. The head-end structure should be chosen to conduct some or all of the listed tests to assess the integrity of the existing lightning protection systems. Any deviations from the standard procedures should be documented accordingly.

Test Point Description (e.g. S.W. corner rod, BLDG 103)	Bond Testing (Recommended < 200mOhms)	Clamp-on Test (Recommended < 25 Ohms)	3-Point Fall Off Potential (Recommended < 25 Ohms)
C1		0.033 Ohms	
C2		0.026	
C3		0.017	
C4		Lo.01	
C5		Lo.01	
C6		0.021	
C7		0.017	
C8		Lo.01	
C9		Lo.01	
C10		Lo.01	
G3			10.62 Ohms
G2			7.62 Ohms
G1			100+ Ohms

General Recommendations.
Items identified by visual inspection and/or test that ought to be repaired:

Air terminal 9 is missing and should be replaced.
Ground 1 down lead need repair. Either the ground rod should be replaced or it needs to be re-terminated.
Overall the system passes inspection.

LPS - Legend

Numbers (1-14) correspond to air terminals.
Letters (G) correspond to ground leads.
Red markers correspond with errors in components.

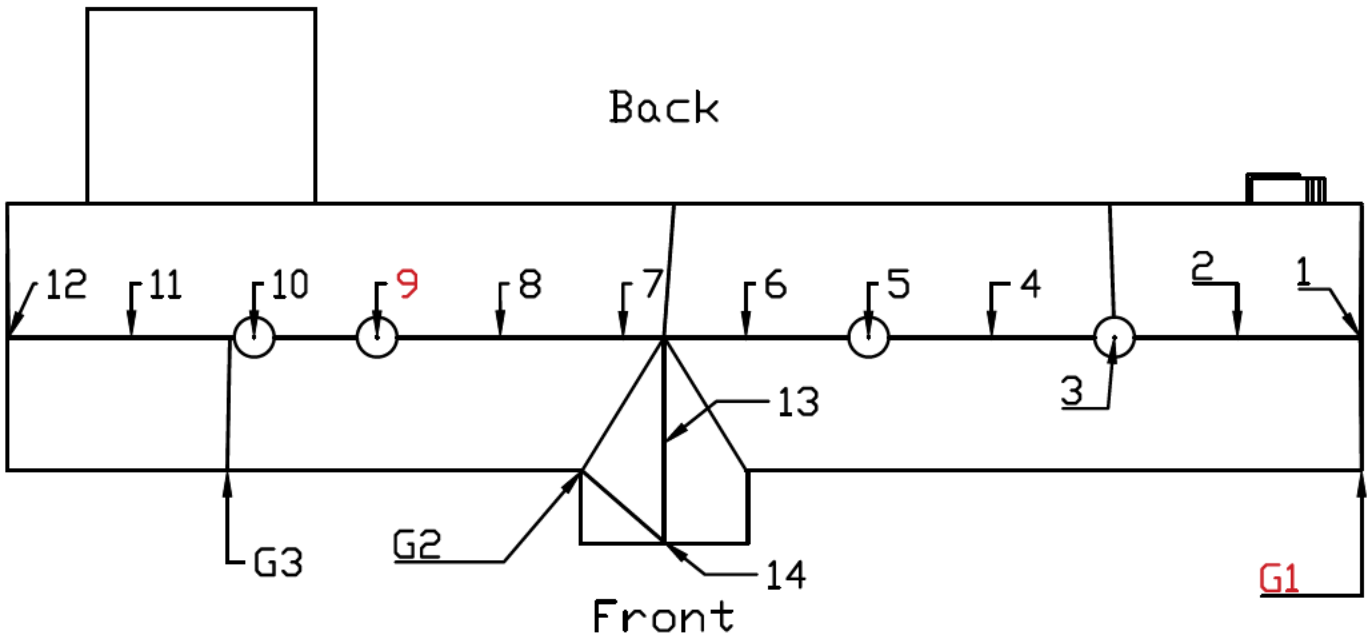

Top View With LPS Legend

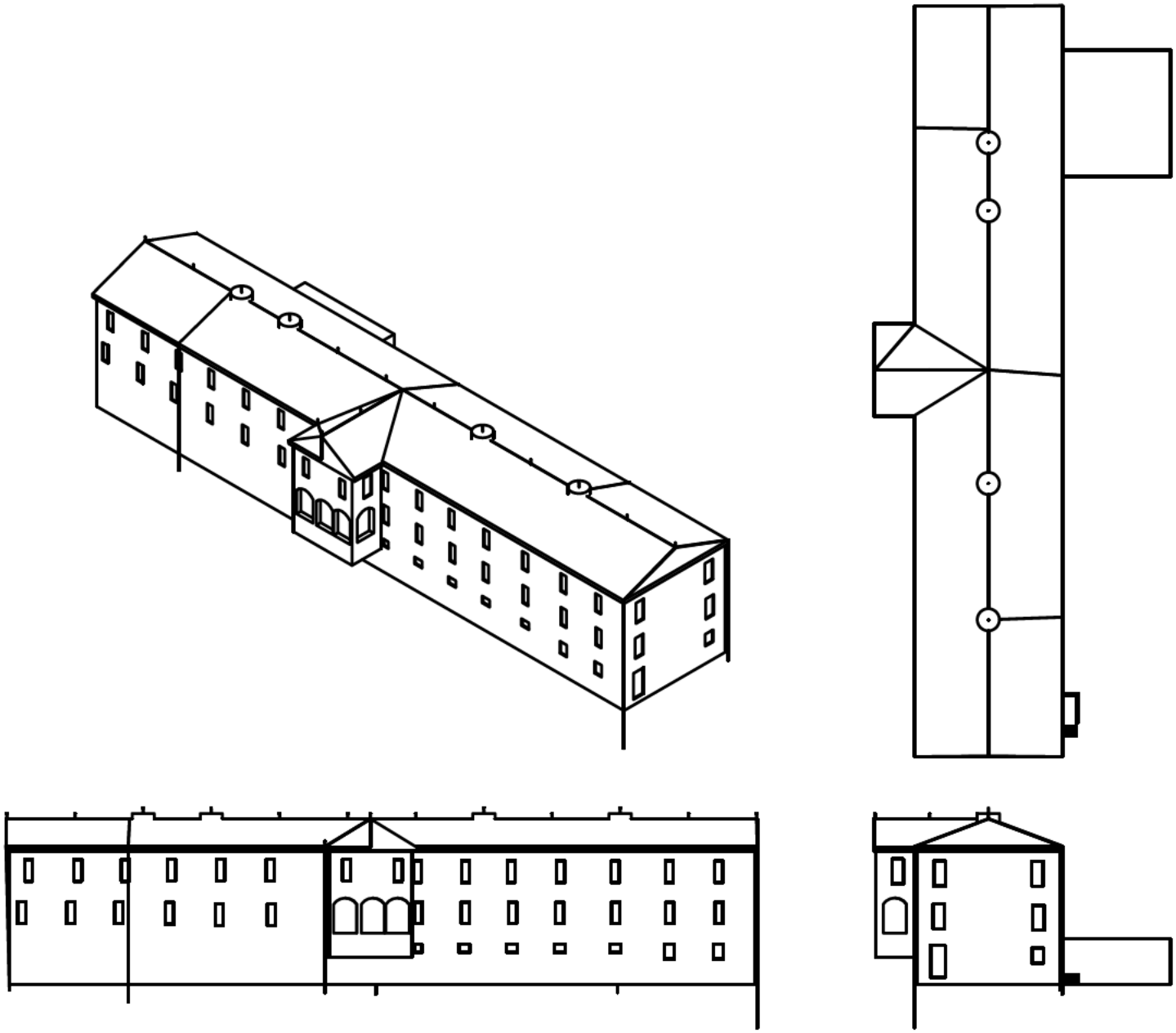

Isometric Diagram

Front View Building (Photo)

Visual Inspections:
Ensure that any anomalies are documented with accompanying pictures and/or supporting documentation to facilitate the quality assurance and validation process.

Inspection Criteria	BLDG 467	NOTES
Power, data and communication lines are installed in a conduit and run underground at least 50 ft. before entering the facility? If the conduit is above grade before entry to the facility; the above grade portion of the conduit must be metallic and grounded. ● DOD 6055.09-M, V2.E3.6.2 ● DA PAM 385-64, 17-26.b ● AFMAN 91-201, 5.23.5 ● AFI 32-1065, 15.1 ● NAVSEA OP 5, 6-7.2	Yes	
Down conductors (if present on the inspected facility) must be secured every 3 feet or be provided with a positive means of support? ● *NFPA 780, 4.10* ● *DA PAM 385-64, 17-19.e*	Yes	
Down conductors must be protected from physical damage for a distance of 6 ft. above grade? ● *NFPA 780, 4.9.11* ● *AFI 32-1065, A4.1.8*	Yes	
Main conductor bends shall not form an angle of less than 90 degrees, and not have a radius of bend less than 8 in.? ● *NFPA 780, 4.9.5* ● *DA PAM 385-64, Table 17-4* ● *AFI 32-1065, A4.1.5*	Yes	
Above ground metallic utility lines are bonded to the structural steel or LPS before entering the ammunition facility? ● *DOD 6055.09-M, V2.E3.6* ● *DA PAM 385-64, 17-26.d* ● *AFMAN 91-201, 5.23.5* ● *AFI 32-1065, 15.2* ● *NAVSEA OP 5, 6-6.3.3*	Yes	
Nearest overhead (OH) powerline approximate distance is 50 feet or greater from structure? ● *DOD 6055.09-M, V2.E3.5* ● *DA PAM 385-64, 8.13*	Yes	

Inspection Criteria	BLDG 467	NOTES
Ground ring electrode installed around protected structure? ● *NFPA 780, 8.4.1* ● *DA PAM 385-64, 17-25* ● *AFI 32-1065, A4.1.15* ● *NAVSEA OP 5, 6-5.1*	Yes	
Ground ring electrode sized to Class II material requirements? ● *NFPA 780, 8.4.3* ● *DA PAM 382-64, 17-25* ● *AFI 32-1065, A4.1.15* ● *NAVSEA OP 5, 6-5.1*	Yes	
Railroad tracks (if applicable) are bonded to the LPS system? ● *NFPA 780, 8.5.7* ● *DA PAM 385-64, 17-22.f* ● *NAVSEA OP 5, 6-6.3.1*	N/A	
Metallic access doors and doorframes are bonded to the ground ring electrode? ● *NFPA 780, 8.5.5.1* ● *NAVSEA OP 5, 6-6.3.4*	Yes	
Metallic fences are grounded if located within 6 ft. of protected structure or bonded to the grounding system of the structure? ● *NFPA 780, 8.8.1* ● *DA PAM 385-64, 17-22.e.* ● *NAVSEA OP 5, 6-6.3.2*	N/A	
Metallic masses within the sideflash distance are bonded to the LPS grounding? ● *NFPA 780, 8.5.2* ● *DA PAM 385-64, 17-22.b.(1)* ● *NAVSEA OP 5, 6-6*	Yes	
Facilities with perimeters larger than 300ft of structural steel not used for air terminals must use a mast or catenary type LPS? *AFI 32-1065, 14.5*	N/A	
Air terminals exceeding 24 in. in height shall require additional structural support? *NFPA 780, 4.6.2.2.2*	N/A	

Electrical Tests
Given the variability of structures and construction techniques across different locations, test techniques for evaluating lightning protection systems will be determined on a case-by-case basis. The head-end structure should be chosen to conduct some or all of the listed tests to assess the integrity of the existing lightning protection systems. Any deviations from the standard procedures should be documented accordingly.

Test Point Description (e.g. S.W. corner rod, BLDG 103)	Bond Testing (Recommended < 200mOhms)	Clamp-on Test (Recommended < 25 Ohms)	3-Point Fall Off Potential (Recommended < 25 Ohms)
Downlead E			117 Ohms
Air terminal 7 to full system		0.57 Ohms	
Front Right Corner			10.8 Ohms
Downlead A		0.36 Ohms	
Downlead F			0.31 Ohms
8-C		0.59 Ohms	
8-D		0.58	
Downlead D			10.8 Ohms
Downlead C			11.8 Ohms
Downlead B		5.8 Ohms	

General Recommendations.
Items identified by visual inspection and/or test that ought to be repaired:

Downlead E (by front door) needs to be repaired. It can either get a new ground rod or be reterminated to the existing one depending on what the connection looks like underground.
Overall the system passes inspection.

Building 467

Cable leading to downlead with poor reading.

467 Top View

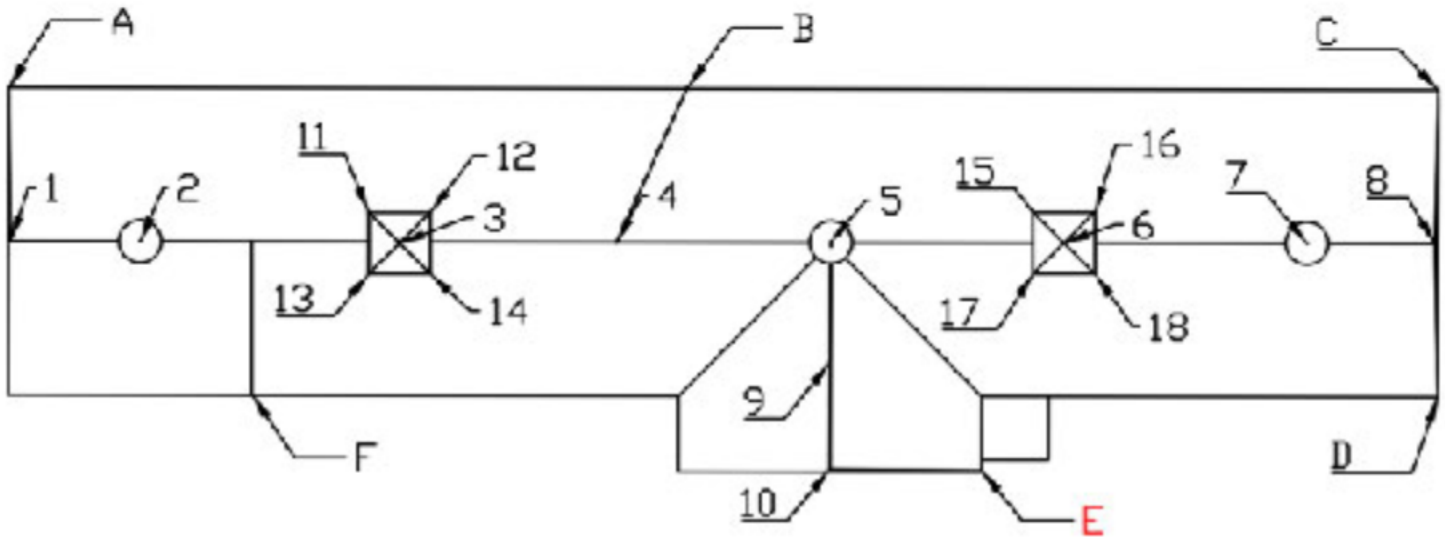

Legend:
Numbers (1-18) correspond to air terminals.
Letters (A-F) correspond to ground leads.
Red indicates a component needing repair.

466 and 467 Combined

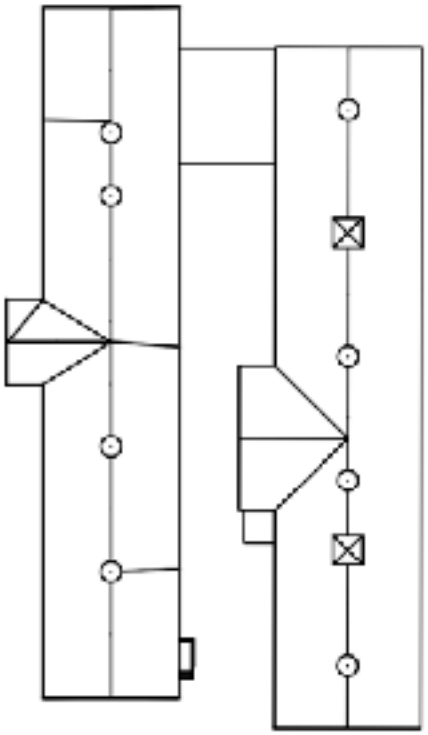

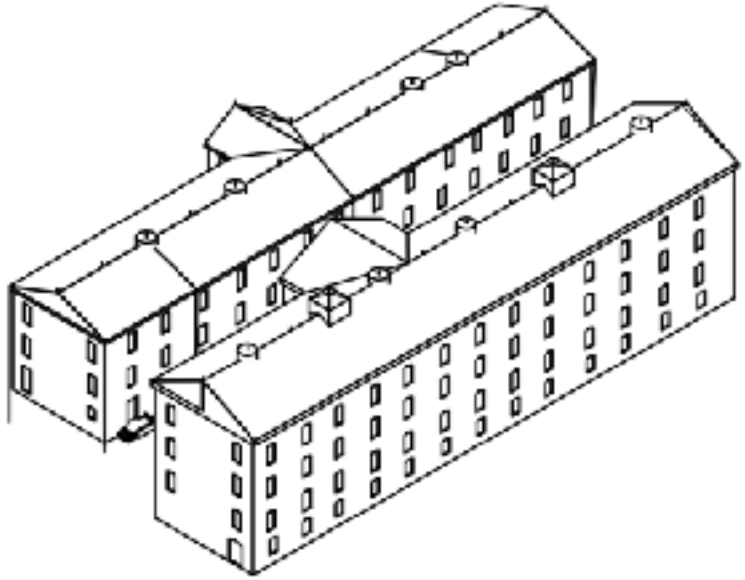

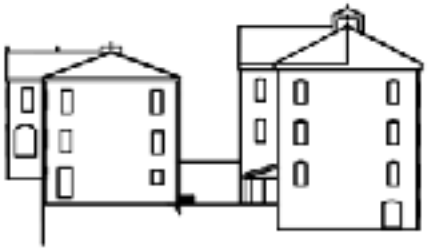

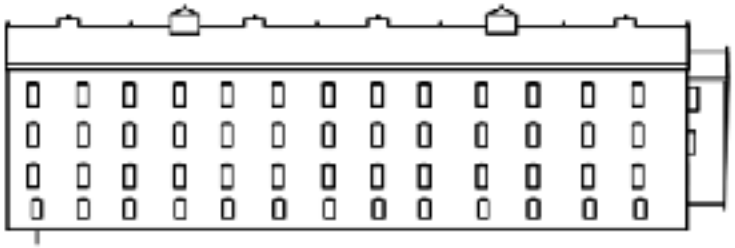

Building 467

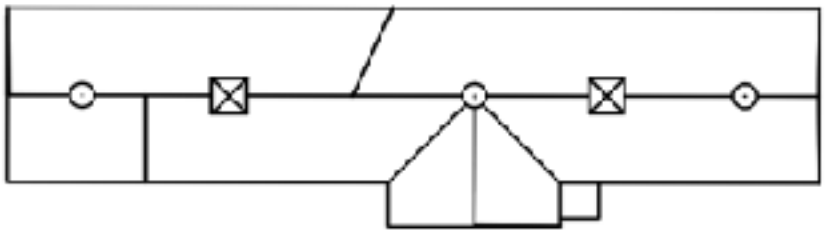

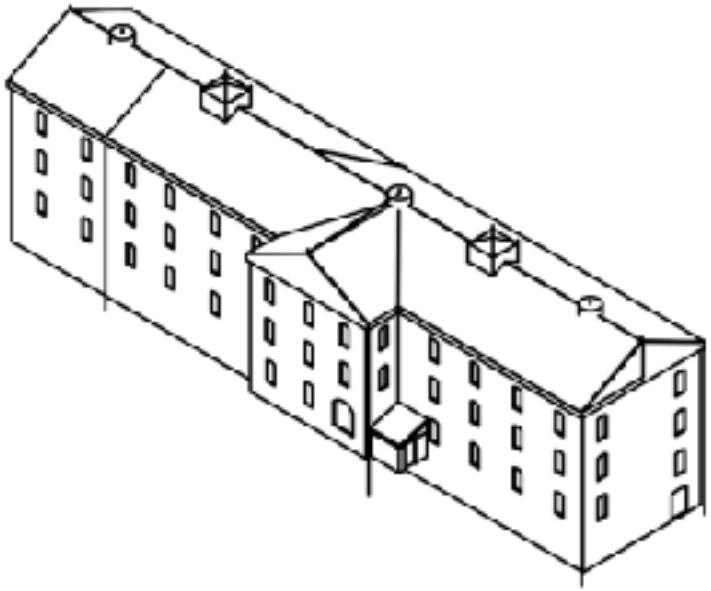

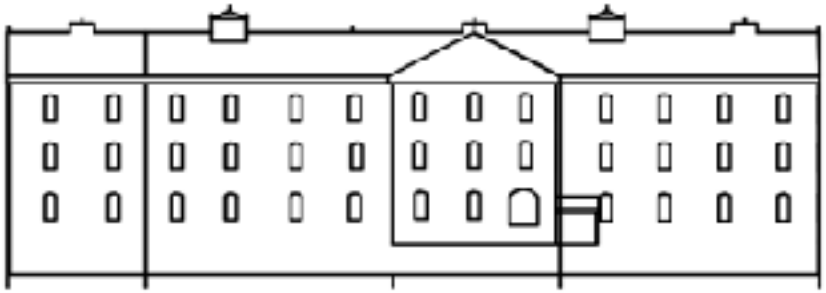

Visual Inspections:
Ensure that any anomalies are documented with accompanying pictures and/or supporting documentation to facilitate the quality assurance and validation process.

Inspection Criteria	BLDG 1148	NOTES
Power, data and communication lines are installed in a conduit and run underground at least 50 ft. before entering the facility? If the conduit is above grade before entry to the facility; the above grade portion of the conduit must be metallic and grounded. ● DOD 6055.09-M, V2.E3.6.2 ● DA PAM 385-64, 17-26.b ● AFMAN 91-201, 5.23.5 ● AFI 32-1065, 15.1 ● NAVSEA OP 5, 6-7.2	No	
Down conductors (if present on the inspected facility) must be secured every 3 feet or be provided with a positive means of support? ● *NFPA 780, 4.10* ● *DA PAM 385-64, 17-19.e*	Yes	
Down conductors must be protected from physical damage for a distance of 6 ft. above grade? ● *NFPA 780, 4.9.11* ● *AFI 32-1065, A4.1.8*	Yes	
Main conductor bends shall not form an angle of less than 90 degrees, and not have a radius of bend less than 8 in.? ● *NFPA 780, 4.9.5* ● *DA PAM 385-64, Table 17-4* ● *AFI 32-1065, A4.1.5*	Yes	
Above ground metallic utility lines are bonded to the structural steel or LPS before entering the facility? ● *DOD 6055.09-M, V2.E3.6* ● *DA PAM 385-64, 17-26.d* ● *AFMAN 91-201, 5.23.5* ● *AFI 32-1065, 15.2* ● *NAVSEA OP 5, 6-6.3.3*	Yes	
Nearest overhead (OH) powerline approximate distance is 50 feet or greater from structure? ● *DOD 6055.09-M, V2.E3.5* ● *DA PAM 385-64, 8.13*	Yes	

Inspection Criteria	BLDG 1148	NOTES
Ground ring electrode installed around protected structure? ● *NFPA 780, 8.4.1* ● *DA PAM 385-64, 17-25* ● *AFI 32-1065, A4.1.15* ● *NAVSEA OP 5, 6-5.1*	Yes	
Ground ring electrode sized to Class II material requirements? ● *NFPA 780, 8.4.3* ● *DA PAM 382-64, 17-25* ● *AFI 32-1065, A4.1.15* ● *NAVSEA OP 5, 6-5.1*	Yes	
Railroad tracks (if applicable) are bonded to the LPS system? ● *NFPA 780, 8.5.7* ● *DA PAM 385-64, 17-22.f* ● *NAVSEA OP 5, 6-6.3.1*	N/A	
Metallic access doors and doorframes are bonded to the ground ring electrode? ● *NFPA 780, 8.5.5.1* ● *NAVSEA OP 5, 6-6.3.4*	Yes	
Metallic fences are grounded if located within 6 ft. of protected structure or bonded to the grounding system of the structure? ● *NFPA 780, 8.8.1* ● *DA PAM 385-64, 17-22.e.* ● *NAVSEA OP 5, 6-6.3.2*	N/A	
Metallic masses within the sideflash distance are bonded to the LPS grounding? ● *NFPA 780, 8.5.2* ● *DA PAM 385-64, 17-22.b.(1)* ● *NAVSEA OP 5, 6-6*	Yes	
Facilities with perimeters larger than 300ft of structural steel not used for air terminals must use a mast or catenary type LPS? *AFI 32-1065, 14.5*	N/A	
Air terminals exceeding 24 in. in height shall require additional structural support? *NFPA 780, 4.6.2.2.2*	N/A	

Electrical Tests
Given the variability of structures and construction techniques across different locations, test techniques for evaluating lightning protection systems will be determined on a case-by-case basis. The head-end structure should be chosen to conduct some or all of the listed tests to assess the integrity of the existing lightning protection systems. Any deviations from the standard procedures should be documented accordingly.

Test Point Description (e.g. S.W. corner rod, BLDG 103)	Bond Testing (Recommended < 200mOhms)	Clamp-on Test (Recommended < 25 Ohms)	3-Point Fall Off Potential (Recommended < 25 Ohms)
Perimeter Rim			4.79 Ohms
Back Left Corner			0.83 Ohms
Back Right Cornner			0.31 Ohms
Lower Roof Loop			4.72 Ohms
Left Downlead			0.88 Ohms
Front Left Corner			2.66 Ohms
Front Right Corner			2.62 Ohms
Right Downlead			0.81 Ohms

General Recommendations.
Items identified by visual inspection and/or test that ought to be repaired:

System is in good condition and passes inspection.

Building 1148

1148 Top

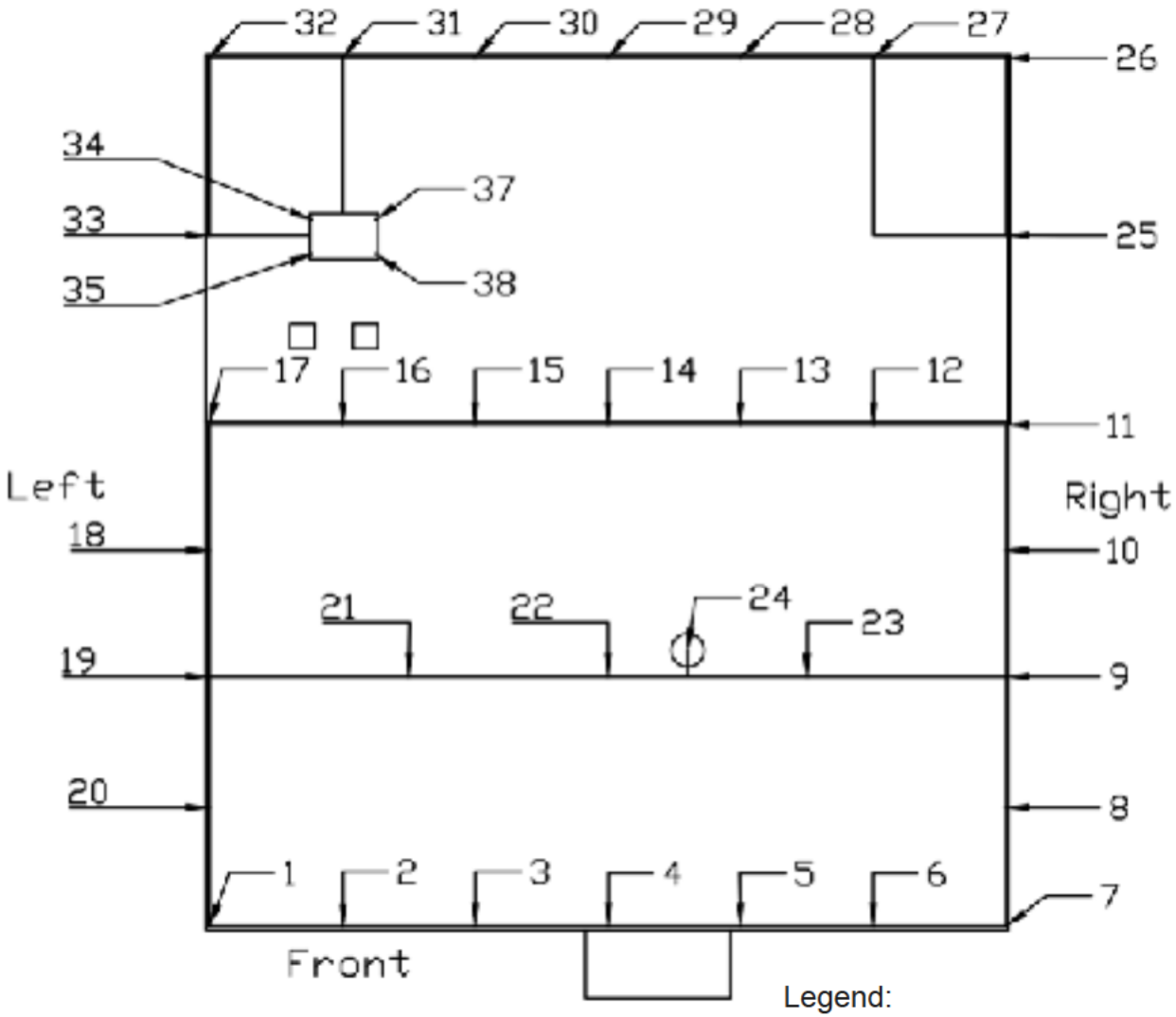

Legend:
Numbers (1-38) correspond to air terminals.
Red indicates a component needing repair.

1148 Isometric

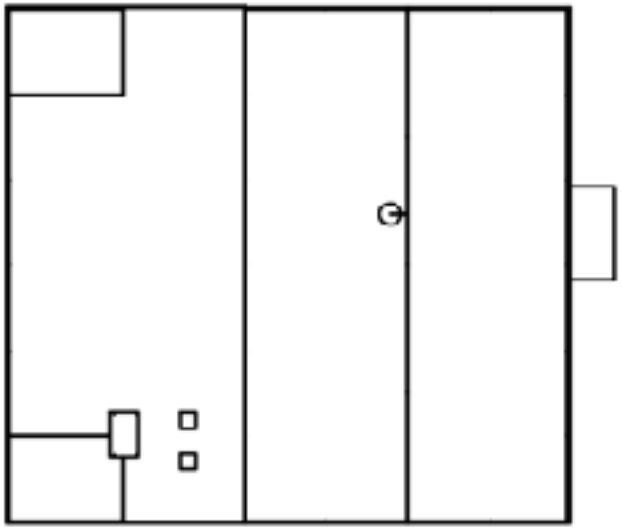

Top

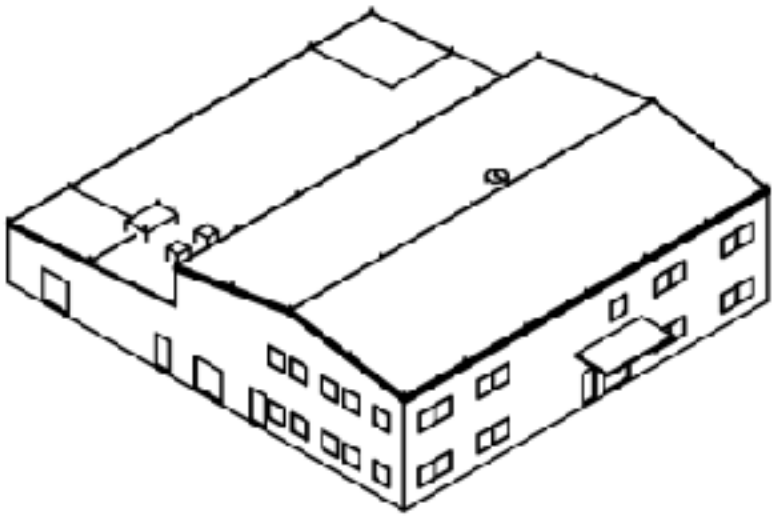

Left

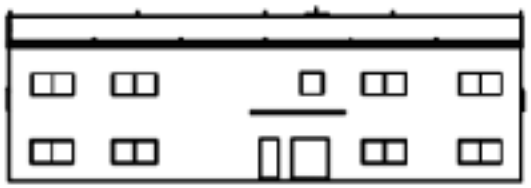

Front

Visual Inspections:
Ensure that any anomalies are documented with accompanying pictures and/or supporting documentation to facilitate the quality assurance and validation process.

Inspection Criteria	BLDG 1149	NOTES
Power, data and communication lines are installed in a conduit and run underground at least 50 ft. before entering the facility? If the conduit is above grade before entry to the facility; the above grade portion of the conduit must be metallic and grounded. ● DOD 6055.09-M, V2.E3.6.2 ● DA PAM 385-64, 17-26.b ● AFMAN 91-201, 5.23.5 ● AFI 32-1065, 15.1 ● NAVSEA OP 5, 6-7.2	Yes	
Down conductors (if present on the inspected facility) must be secured every 3 feet or be provided with a positive means of support? ● *NFPA 780, 4.10* ● *DA PAM 385-64, 17-19.e*	Yes	These were hanging loose in several areas but we repaired them.
Down conductors must be protected from physical damage for a distance of 6 ft. above grade? ● *NFPA 780, 4.9.11* ● *AFI 32-1065, A4.1.8*	Yes	After our repairs.
Main conductor bends shall not form an angle of less than 90 degrees, and not have a radius of bend less than 8 in.? ● *NFPA 780, 4.9.5* ● *DA PAM 385-64, Table 17-4* ● *AFI 32-1065, A4.1.5*	Yes	
Above ground metallic utility lines are bonded to the structural steel or LPS before entering the facility? ● *DOD 6055.09-M, V2.E3.6* ● *DA PAM 385-64, 17-26.d* ● *AFMAN 91-201, 5.23.5* ● *AFI 32-1065, 15.2* ● *NAVSEA OP 5, 6-6.3.3*	Yes	
Nearest overhead (OH) powerline approximate distance is 50 feet or greater from structure? ● *DOD 6055.09-M, V2.E3.5* ● *DA PAM 385-64, 8.13*	Yes	

Inspection Criteria	BLDG 1149	NOTES
Ground ring electrode installed around protected structure? ● *NFPA 780, 8.4.1* ● *DA PAM 385-64, 17-25* ● *AFI 32-1065, A4.1.15* ● *NAVSEA OP 5, 6-5.1*	Yes	
Ground ring electrode sized to Class II material requirements? ● *NFPA 780, 8.4.3* ● *DA PAM 382-64, 17-25* ● *AFI 32-1065, A4.1.15* ● *NAVSEA OP 5, 6-5.1*	Yes	
Railroad tracks (if applicable) are bonded to the LPS system? ● *NFPA 780, 8.5.7* ● *DA PAM 385-64, 17-22.f* ● *NAVSEA OP 5, 6-6.3.1*	N/A	
Metallic access doors and doorframes are bonded to the ground ring electrode? ● *NFPA 780, 8.5.5.1* ● *NAVSEA OP 5, 6-6.3.4*	N/A	
Metallic fences are grounded if located within 6 ft. of protected structure or bonded to the grounding system of the structure? ● *NFPA 780, 8.8.1* ● *DA PAM 385-64, 17-22.e.* ● *NAVSEA OP 5, 6-6.3.2*	N/A	
Metallic masses within the sideflash distance are bonded to the LPS grounding? ● *NFPA 780, 8.5.2* ● *DA PAM 385-64, 17-22.b.(1)* ● *NAVSEA OP 5, 6-6*	Yes	
Facilities with perimeters larger than 300ft of structural steel not used for air terminals must use a mast or catenary type LPS? *AFI 32-1065, 14.5*	N/A	
Air terminals exceeding 24 in. in height shall require additional structural support? *NFPA 780, 4.6.2.2.2*	N/A	

Electrical Tests

Given the variability of structures and construction techniques across different locations, test techniques for evaluating lightning protection systems will be determined on a case-by-case basis. The head-end structure should be chosen to conduct some or all of the listed tests to assess the integrity of the existing lightning protection systems. Any deviations from the standard procedures should be documented accordingly.

Test Point Description (e.g. S.W. corner rod, BLDG 103)	Bond Testing (Recommended < 200mOhms)	Clamp-on Test (Recommended < 25 Ohms)	3-Point Fall Off Potential (Recommended < 25 Ohms)
SE Corner			0.98 Ohms
SE 2			1.0 Ohms
SE 3			1.03 Ohms
SW2			0.97 Ohms
SW Corner			0.97 Ohms
NE Corner			0.82 Ohms
NE2			0.78 Ohms
NE3			0.82 Ohms
17		0.95 Ohms	
12		0.96 Ohms	
9		0.96 Ohms	
6		0.96 Ohms	
2		0.95 Ohms	
62		0.98 Ohms	
Lower roof East to West			6.85 Ohms
Upper roof point to point			4.25 Ohms
Roof vent 1		4.49 Ohms	
Roof vent 2		5..08 Ohms	

General Recommendations.
Items identified by visual inspection and/or test that ought to be repaired:

Southern slope had several loose connectors resulting in downed air terminals and cable hanging off of the roof. These connections were re-attached and tightened and the air terminals were repaired.
Air Terminal #16 needs to be replaced.
The LPS passes inspection.

Building 1149

Loose roof connectors that were corrected.

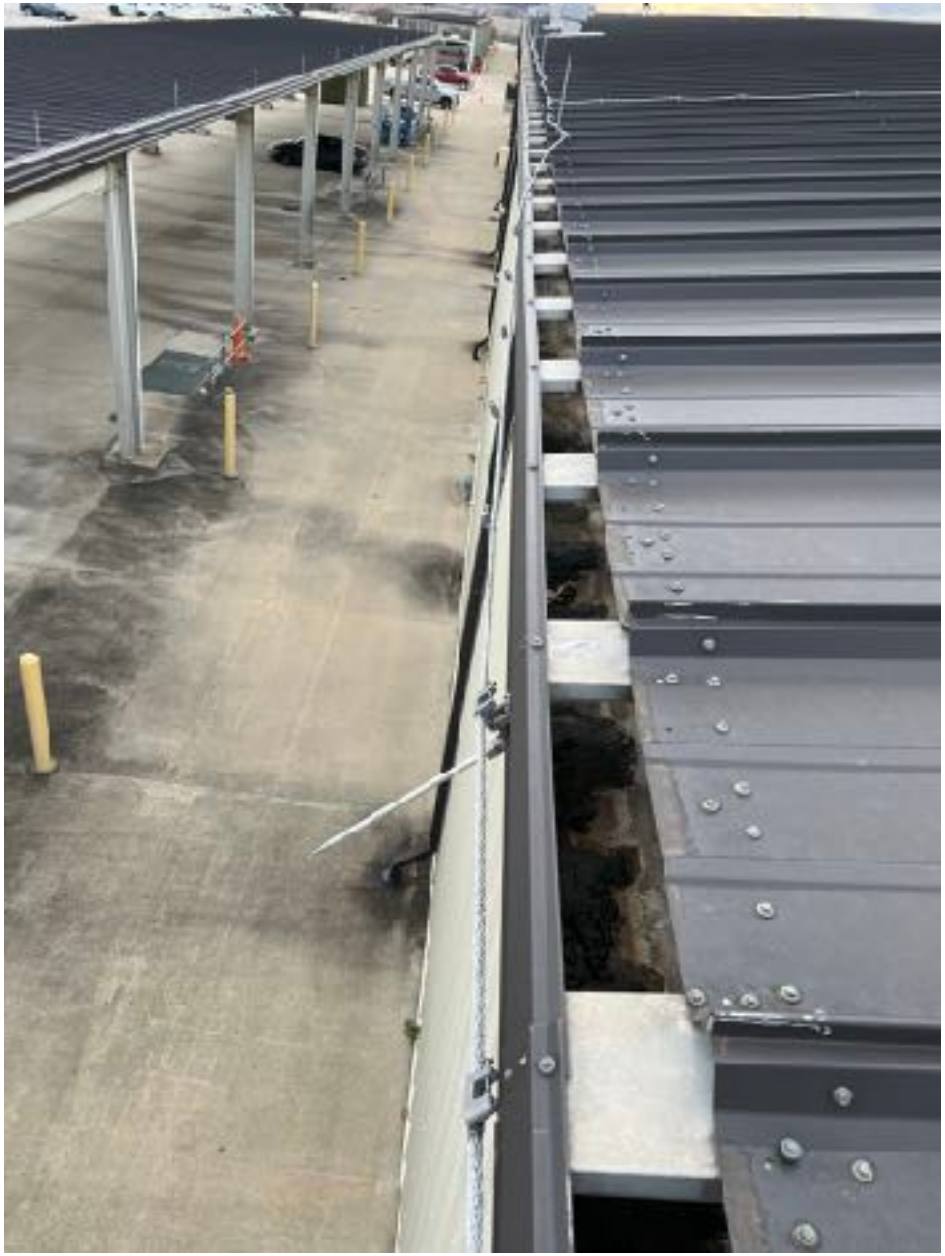

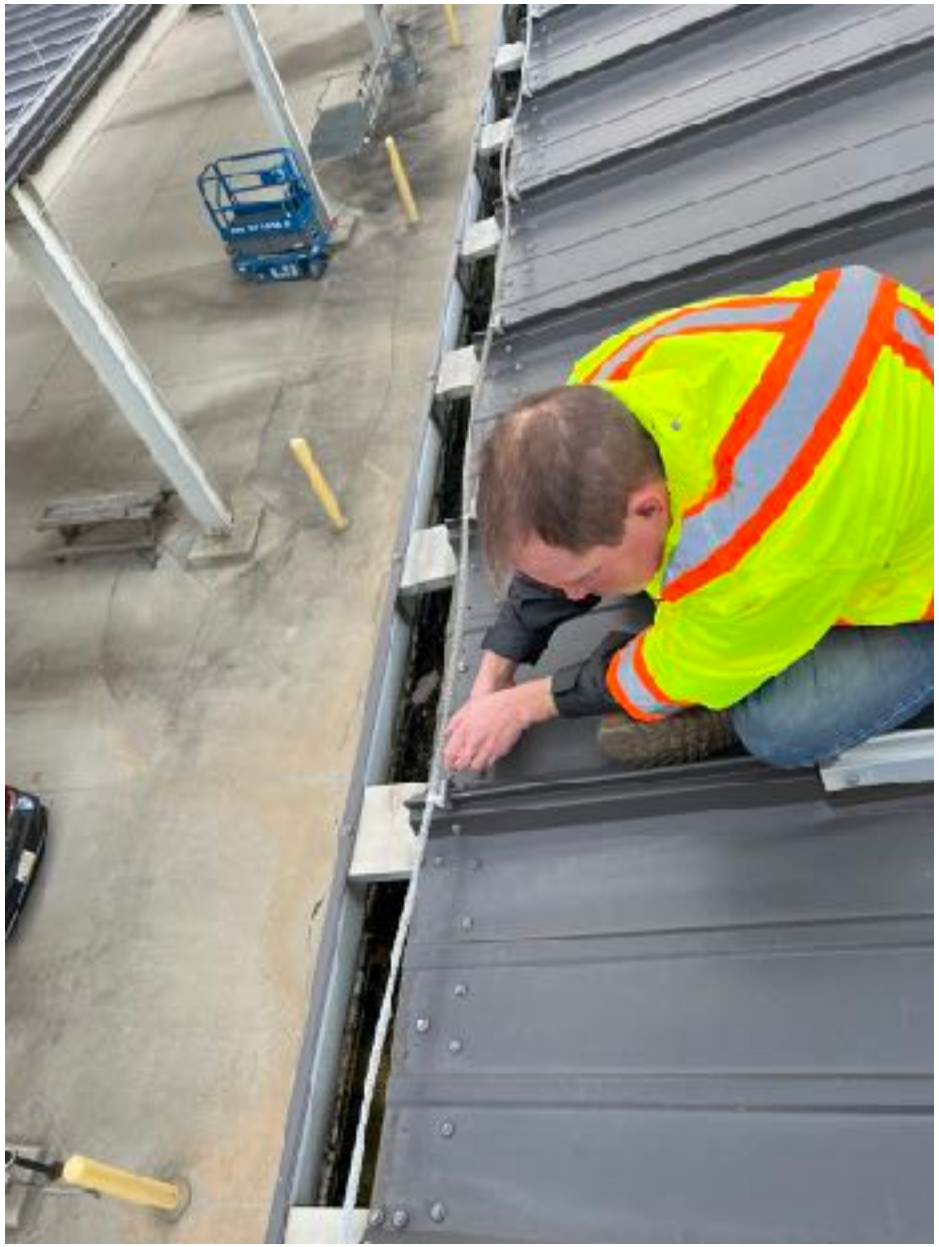

Building 1149 Top

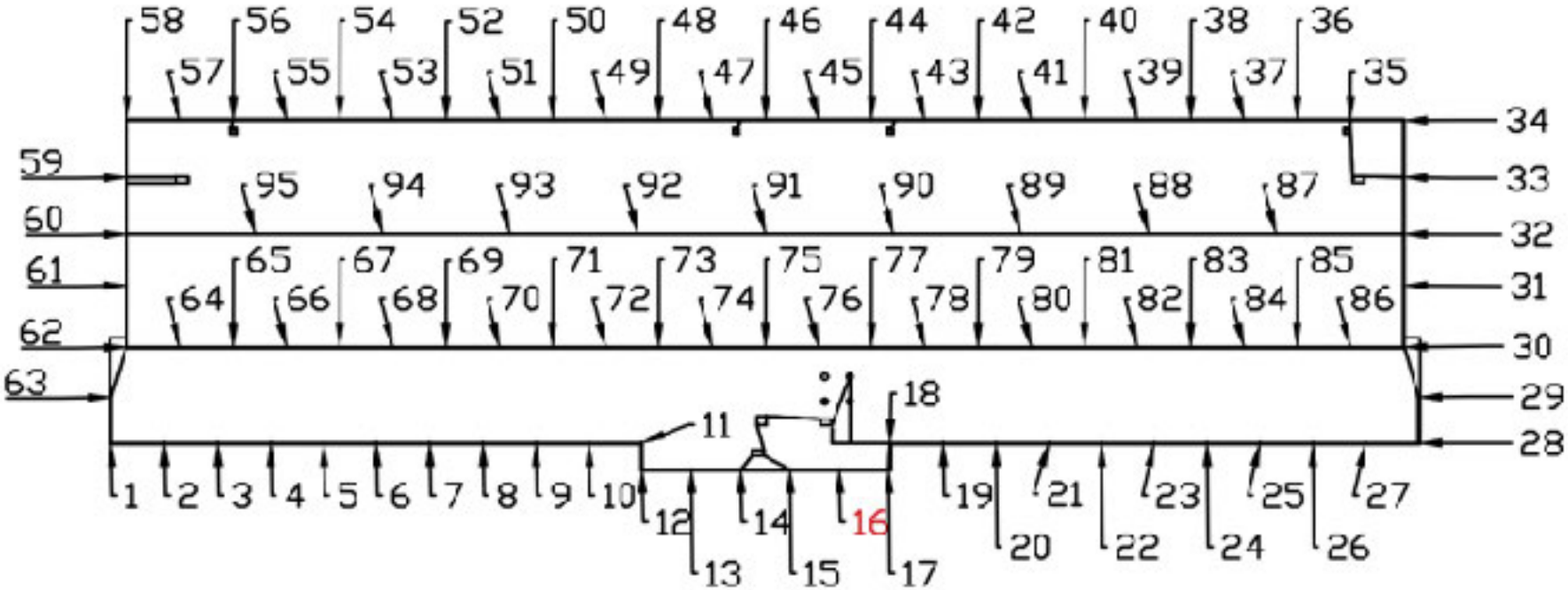

Legend:
Numbers (1-95) correspond to air terminals.

Red indicates a component needing repair.

Building 1149 Top View with More Detail

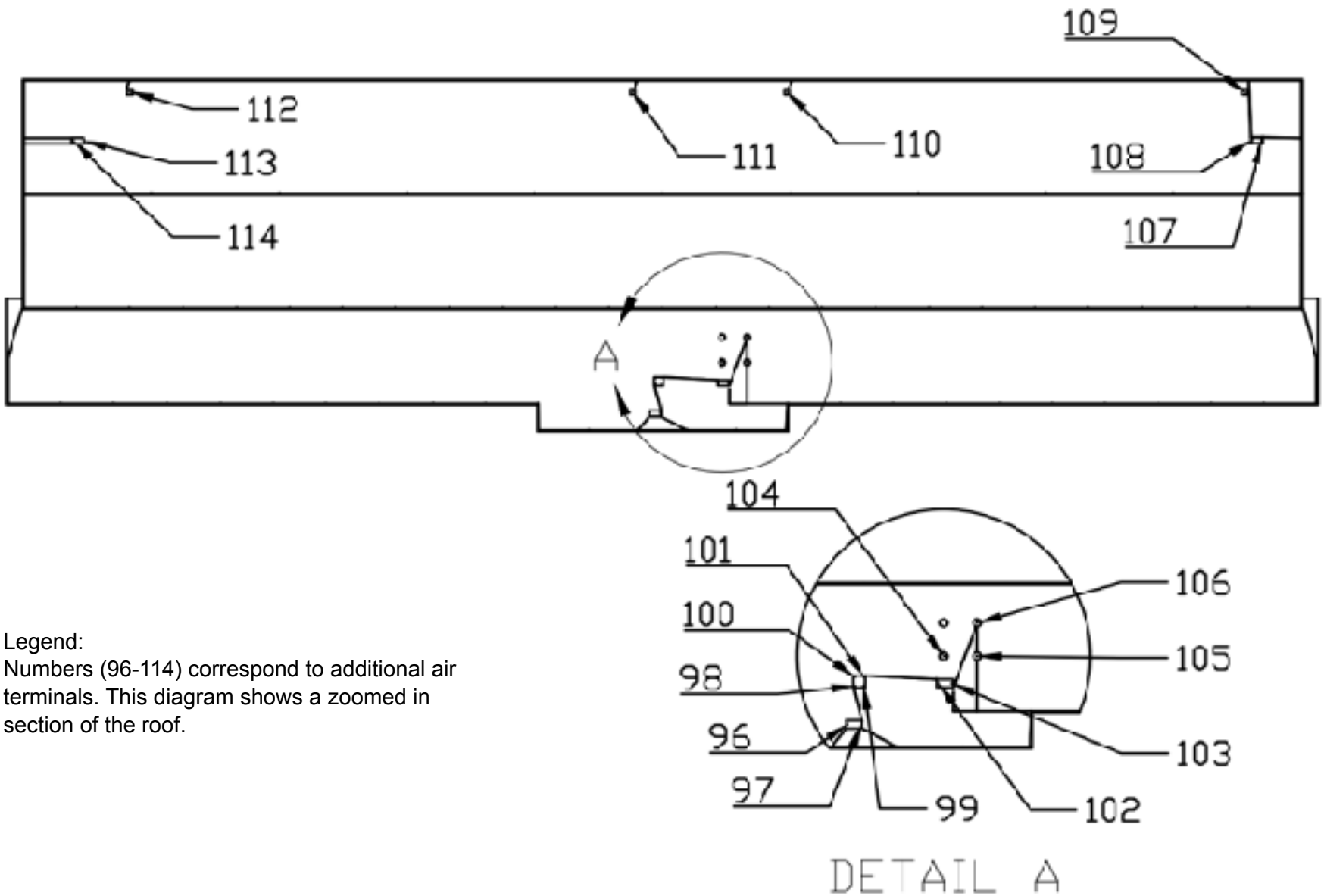

Legend:
Numbers (96-114) correspond to additional air terminals. This diagram shows a zoomed in section of the roof.

Building 1149 Isometric Diagrams

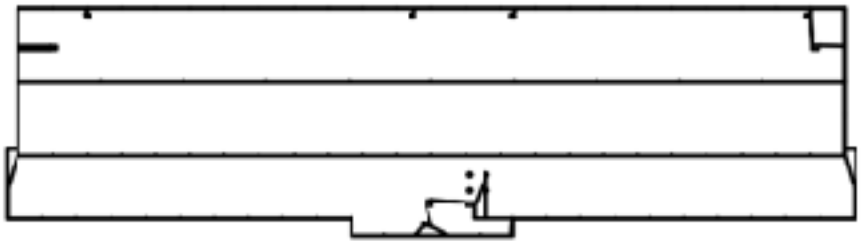

Top

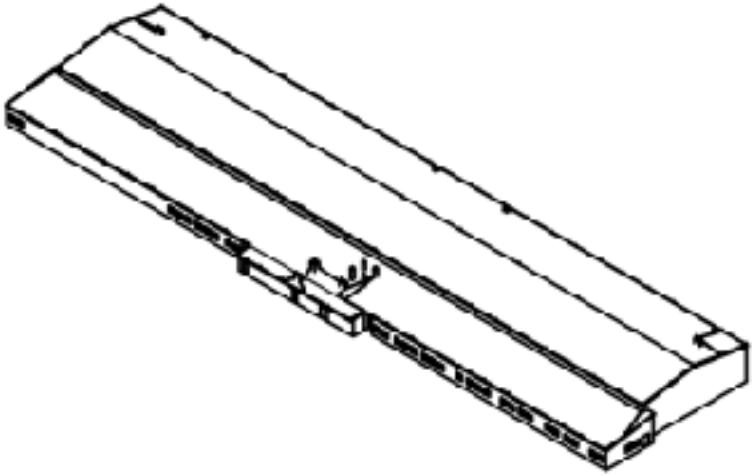

Front

Right

Visual Inspections:
Ensure that any anomalies are documented with accompanying pictures and/or supporting documentation to facilitate the quality assurance and validation process.

Inspection Criteria	BLDG 1150	NOTES
Power, data and communication lines are installed in a conduit and run underground at least 50 ft. before entering the facility? If the conduit is above grade before entry to the facility; the above grade portion of the conduit must be metallic and grounded. ● DOD 6055.09-M, V2.E3.6.2 ● DA PAM 385-64, 17-26.b ● AFMAN 91-201, 5.23.5 ● AFI 32-1065, 15.1 ● NAVSEA OP 5, 6-7.2	Yes	
Down conductors (if present on the inspected facility) must be secured every 3 feet or be provided with a positive means of support? ● *NFPA 780, 4.10* ● *DA PAM 385-64, 17-19.e*	Yes	
Down conductors must be protected from physical damage for a distance of 6 ft. above grade? ● *NFPA 780, 4.9.11* ● *AFI 32-1065, A4.1.8*	Yes	
Main conductor bends shall not form an angle of less than 90 degrees, and not have a radius of bend less than 8 in.? ● *NFPA 780, 4.9.5* ● *DA PAM 385-64, Table 17-4* ● *AFI 32-1065, A4.1.5*	Yes	
Above ground metallic utility lines are bonded to the structural steel or LPS before entering the ammunition facility? ● *DOD 6055.09-M, V2.E3.6* ● *DA PAM 385-64, 17-26.d* ● *AFMAN 91-201, 5.23.5* ● *AFI 32-1065, 15.2* ● *NAVSEA OP 5, 6-6.3.3*	Yes	
Nearest overhead (OH) powerline approximate distance is 50 feet or greater from structure? ● *DOD 6055.09-M, V2.E3.5* ● *DA PAM 385-64, 8.13*	Yes	

Inspection Criteria	BLDG 1150	NOTES
Ground ring electrode installed around protected structure? ● *NFPA 780, 8.4.1* ● *DA PAM 385-64, 17-25* ● *AFI 32-1065, A4.1.15* ● *NAVSEA OP 5, 6-5.1*	Yes	
Ground ring electrode sized to Class II material requirements? ● *NFPA 780, 8.4.3* ● *DA PAM 382-64, 17-25* ● *AFI 32-1065, A4.1.15* ● *NAVSEA OP 5, 6-5.1*	Unknown	
Railroad tracks (if applicable) are bonded to the LPS system? ● *NFPA 780, 8.5.7* ● *DA PAM 385-64, 17-22.f* ● *NAVSEA OP 5, 6-6.3.1*	N/A	
Metallic access doors and doorframes are bonded to the ground ring electrode? ● *NFPA 780, 8.5.5.1* ● *NAVSEA OP 5, 6-6.3.4*	N/A	
Metallic fences are grounded if located within 6 ft. of protected structure or bonded to the grounding system of the structure? ● *NFPA 780, 8.8.1* ● *DA PAM 385-64, 17-22.e.* ● *NAVSEA OP 5, 6-6.3.2*	N/A	
Metallic masses within the sideflash distance are bonded to the LPS grounding? ● *NFPA 780, 8.5.2* ● *DA PAM 385-64, 17-22.b.(1)* ● *NAVSEA OP 5, 6-6*	Yes	
Facilities with perimeters larger than 300ft of structural steel not used for air terminals must use a mast or catenary type LPS? *AFI 32-1065, 14.5*	N/A	
Air terminals exceeding 24 in. in height shall require additional structural support? *NFPA 780, 4.6.2.2.2*	N/A	

Electrical Tests
Given the variability of structures and construction techniques across different locations, test techniques for evaluating lightning protection systems will be determined on a case-by-case basis. The head-end structure should be chosen to conduct some or all of the listed tests to assess the integrity of the existing lightning protection systems. Any deviations from the standard procedures should be documented accordingly.

Test Point Description (e.g. S.W. corner rod, BLDG 103)	Bond Testing Point to point (Recommended < 25 Ohms)	Clamp-on Test (Recommended < 25 Ohms)	3-Point Fall Off Potential (Recommended < 25 Ohms)
Front left vent to right back stack		5.02 Ohms	
Back left vent to front right stack		4.97 Ohms	
Back right vent to front left stack		5.15 Ohms	
Ground position 3			0.80 Ohms
Ground position 6			0.80 Ohms
Ground position 9			0.79 Ohms
Ground position 17			0,81 Ohms
Ground position 20			0.77 Ohms
Position 25			0.76 Ohms
Position 28			0.77 Ohms
Position 60 Top			0.80 Ohms
Top of roof	4.93 Ohms		
Top of roof center	4.09 Ohms		
Point to point lower section	4.09 Ohms		

General Recommendations.
Items identified by visual inspection and/or test that ought to be repaired:

Roof vent missing connector near air terminal 20.
Cable was disconnected from roof panel ridges in several places. We reconnected the connectors and tightened them back up.
One air terminal was broken and should be replaced on the back/center of building. (41)
Air terminal 104 is disconnected on roof vent and needs a new cable.
Overall the system passes inspection.

Building 1150

Broken air terminal (41).

Air Terminal (104) is disconnected.

Building 1150 Top

Legend:
Numbers (1-96) correspond to air terminals.

Red indicates a component needing repair.

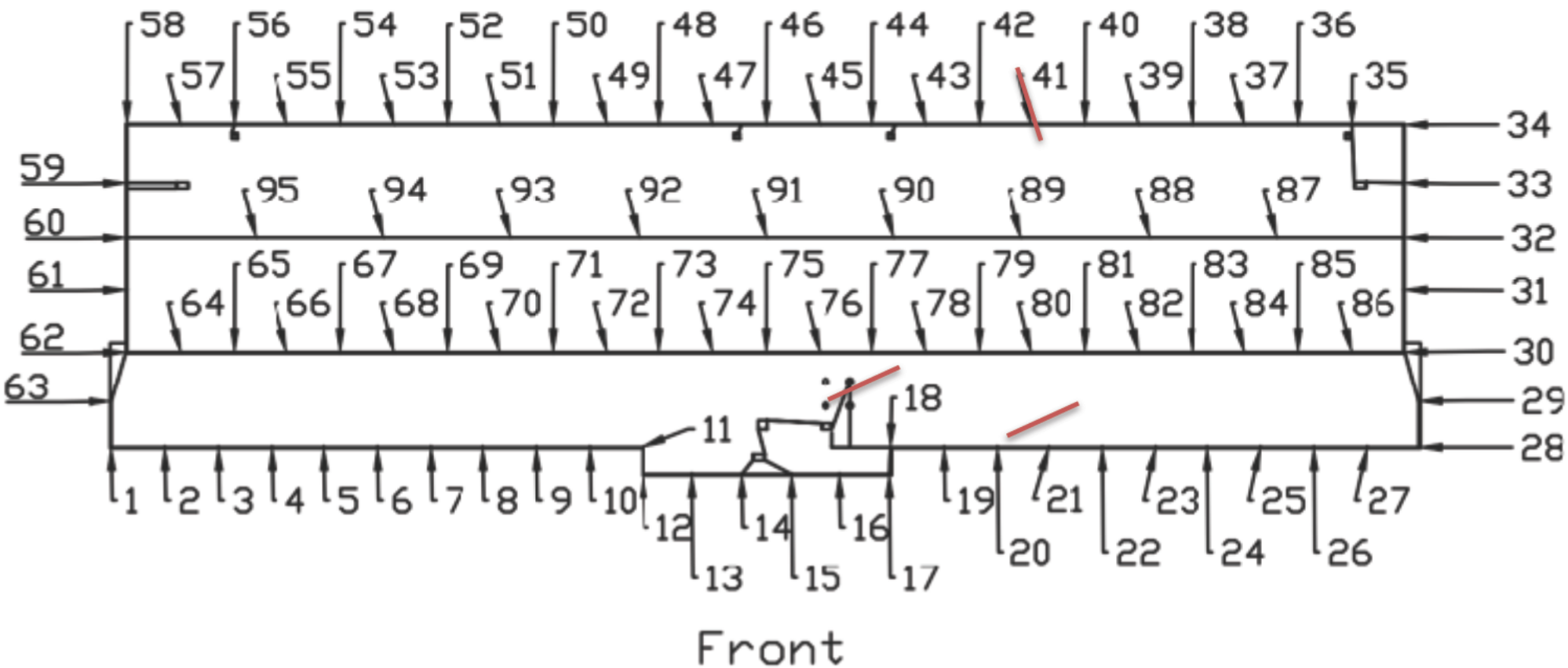

1150 Top 2 (Closer Detail)

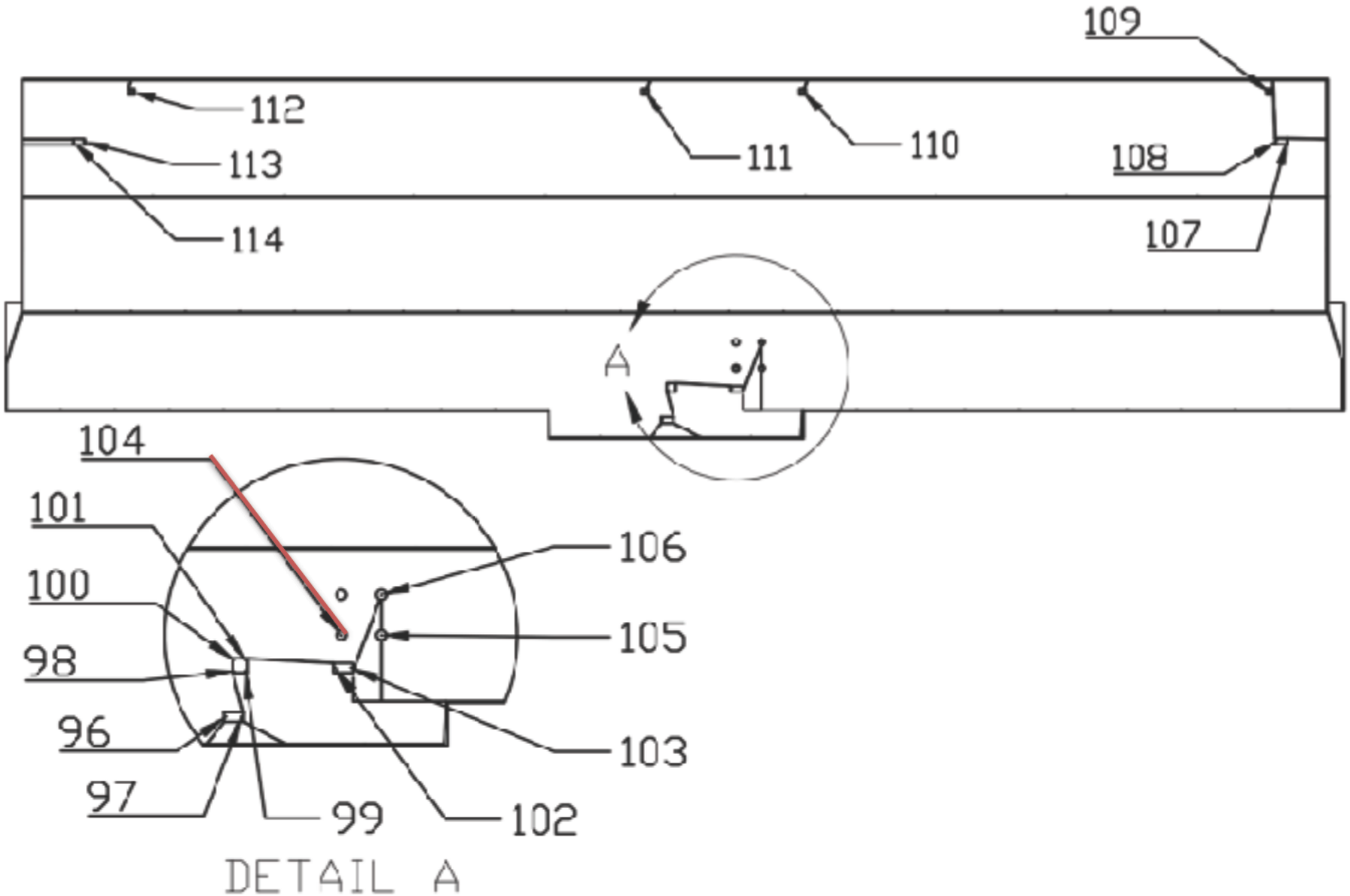

Building 1150 Isometric Diagram

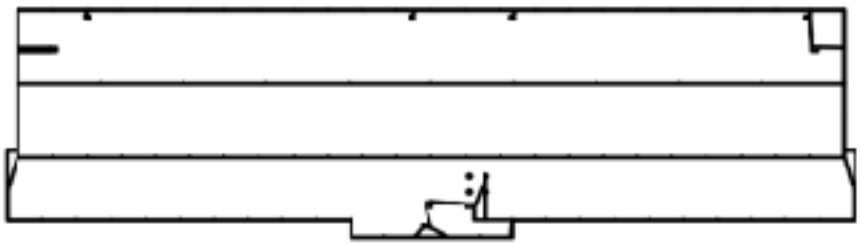

Top

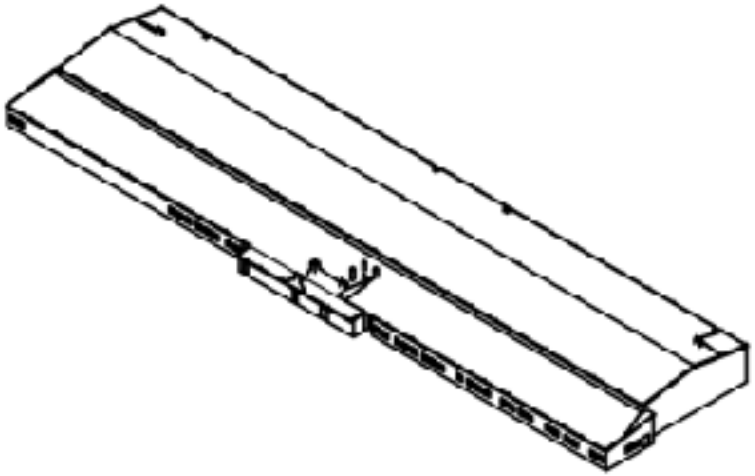

Front

Right

Visual Inspections:
Ensure that any anomalies are documented with accompanying pictures and/or supporting documentation to facilitate the quality assurance and validation process.

Inspection Criteria	BLDG 1155	NOTES
Power, data and communication lines are installed in a conduit and run underground at least 50 ft. before entering the facility? If the conduit is above grade before entry to the facility; the above grade portion of the conduit must be metallic and grounded. ● DOD 6055.09-M, V2.E3.6.2 ● DA PAM 385-64, 17-26.b ● AFMAN 91-201, 5.23.5 ● AFI 32-1065, 15.1 ● NAVSEA OP 5, 6-7.2	Yes	
Down conductors (if present on the inspected facility) must be secured every 3 feet or be provided with a positive means of support? ● *NFPA 780, 4.10* ● *DA PAM 385-64, 17-19.e*	Yes	
Down conductors must be protected from physical damage for a distance of 6 ft. above grade? ● *NFPA 780, 4.9.11* ● *AFI 32-1065, A4.1.8*	Yes	
Main conductor bends shall not form an angle of less than 90 degrees, and not have a radius of bend less than 8 in.? ● *NFPA 780, 4.9.5* ● *DA PAM 385-64, Table 17-4* ● *AFI 32-1065, A4.1.5*	Yes	
Above ground metallic utility lines are bonded to the structural steel or LPS before entering the ammunition facility? ● *DOD 6055.09-M, V2.E3.6* ● *DA PAM 385-64, 17-26.d* ● *AFMAN 91-201, 5.23.5* ● *AFI 32-1065, 15.2* ● *NAVSEA OP 5, 6-6.3.3*	Yes	
Nearest overhead (OH) powerline approximate distance is 50 feet or greater from structure? ● *DOD 6055.09-M, V2.E3.5* ● *DA PAM 385-64, 8.13*	Yes	

Inspection Criteria	BLDG 1155	NOTES
Ground ring electrode installed around protected structure? ● *NFPA 780, 8.4.1* ● *DA PAM 385-64, 17-25* ● *AFI 32-1065, A4.1.15* ● *NAVSEA OP 5, 6-5.1*	Yes	
Ground ring electrode sized to Class II material requirements? ● *NFPA 780, 8.4.3* ● *DA PAM 382-64, 17-25* ● *AFI 32-1065, A4.1.15* ● *NAVSEA OP 5, 6-5.1*	Yes	
Railroad tracks (if applicable) are bonded to the LPS system? ● *NFPA 780, 8.5.7* ● *DA PAM 385-64, 17-22.f* ● *NAVSEA OP 5, 6-6.3.1*	N/A	
Metallic access doors and doorframes are bonded to the ground ring electrode? ● *NFPA 780, 8.5.5.1* ● *NAVSEA OP 5, 6-6.3.4*	Yes	
Metallic fences are grounded if located within 6 ft. of protected structure or bonded to the grounding system of the structure? ● *NFPA 780, 8.8.1* ● *DA PAM 385-64, 17-22.e.* ● *NAVSEA OP 5, 6-6.3.2*	N/A	
Metallic masses within the sideflash distance are bonded to the LPS grounding? ● *NFPA 780, 8.5.2* ● *DA PAM 385-64, 17-22.b.(1)* ● *NAVSEA OP 5, 6-6*	Yes	
Facilities with perimeters larger than 300ft of structural steel not used for air terminals must use a mast or catenary type LPS? *AFI 32-1065, 14.5*	Yes	
Air terminals exceeding 24 in. in height shall require additional structural support? *NFPA 780, 4.6.2.2.2*	N/A	

Electrical Tests
Given the variability of structures and construction techniques across different locations, test techniques for evaluating lightning protection systems will be determined on a case-by-case basis. The head-end structure should be chosen to conduct some or all of the listed tests to assess the integrity of the existing lightning protection systems. Any deviations from the standard procedures should be documented accordingly.

Test Point Description (e.g. S.W. corner rod, BLDG 103)	Bond Testing (Recommended < 200mOhms)	Clamp-on Test (Recommended < 25 Ohms)	3-Point Fall Off Potential (Recommended < 25 Ohms)
Bottom Loop			4.70 Ohms
Middle Loop			2.63 Ohms
Right Loop			2.54 Ohms
Left Loop			2.54 Ohms
Left Down Conductor			2.55 Ohms

General Recommendations.
Items identified by visual inspection and/or test that ought to be repaired:

Air Terminal 13 is missing and should be replaced.
System is good overall and passes inspection.

Building 1155

Building 1155 Top

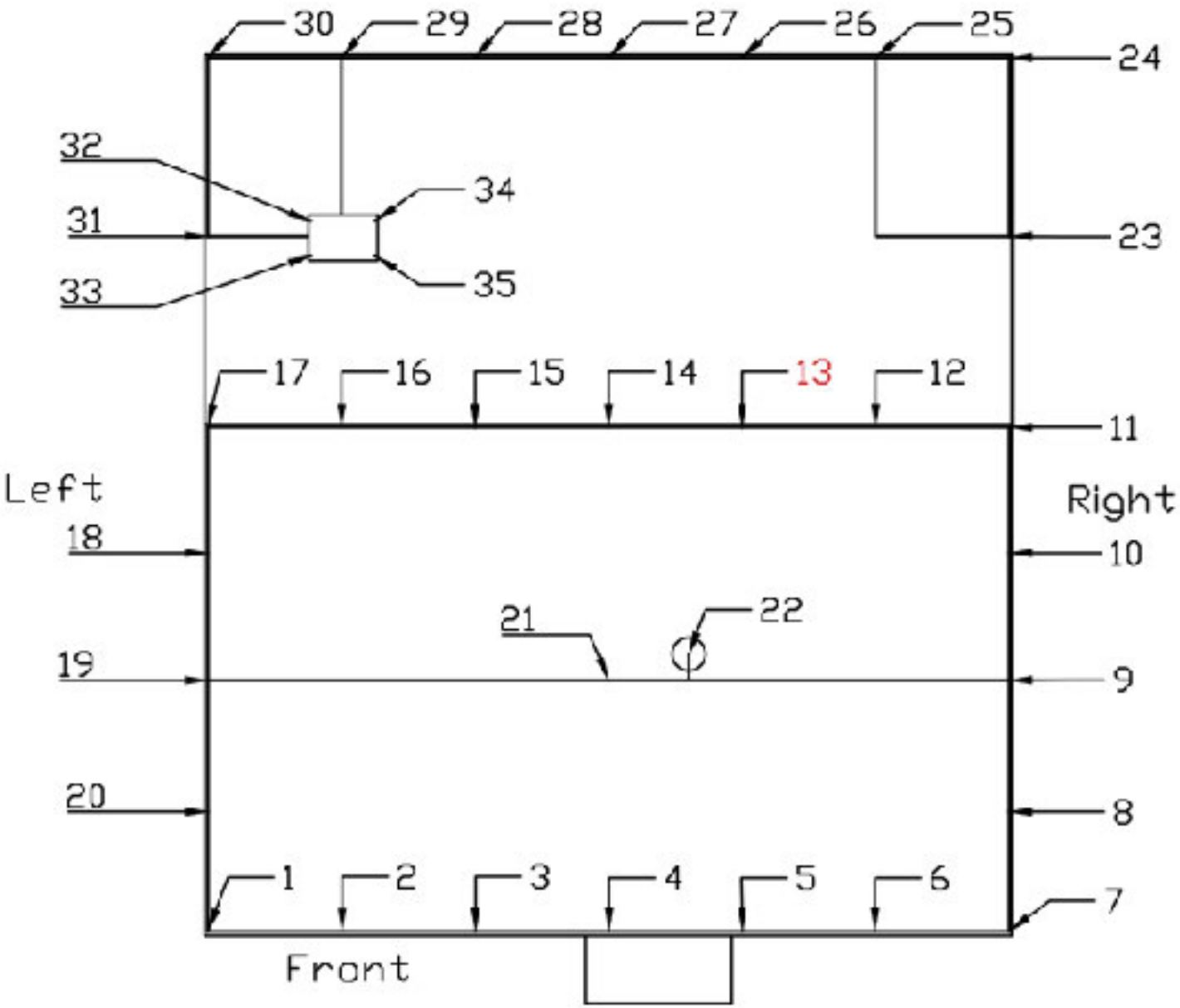

Legend:
Numbers (1-35) correspond to air terminals.

Red indicates a component needing repair.

Building 1155 Isometric Diagram

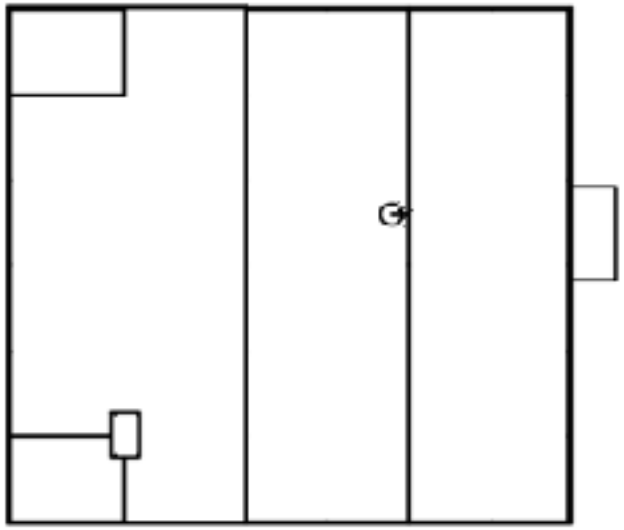

Top

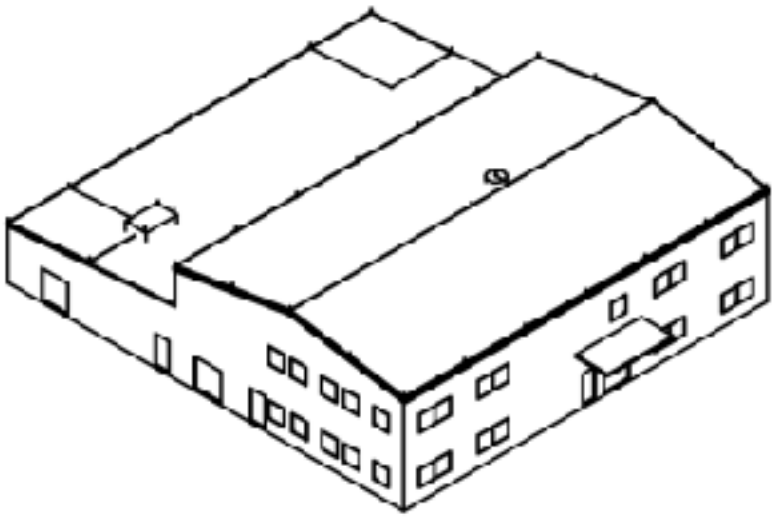

Left

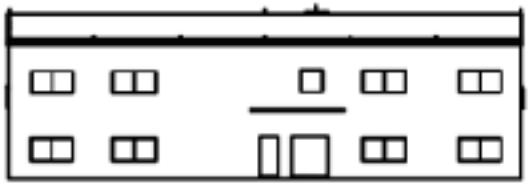

Front

Visual Inspections:
Ensure that any anomalies are documented with accompanying pictures and/or supporting documentation to facilitate the quality assurance and validation process.

Inspection Criteria	BLDG1156	NOTES
Power, data and communication lines are installed in a conduit and run underground at least 50 ft. before entering the facility? If the conduit is above grade before entry to the facility; the above grade portion of the conduit must be metallic and grounded. ● DOD 6055.09-M, V2.E3.6.2 ● DA PAM 385-64, 17-26.b ● AFMAN 91-201, 5.23.5 ● AFI 32-1065, 15.1 ● NAVSEA OP 5, 6-7.2	Yes	
Down conductors (if present on the inspected facility) must be secured every 3 feet or be provided with a positive means of support? ● *NFPA 780, 4.10* ● *DA PAM 385-64, 17-19.e*	Yes	
Down conductors must be protected from physical damage for a distance of 6 ft. above grade? ● *NFPA 780, 4.9.11* ● *AFI 32-1065, A4.1.8*	Yes	
Main conductor bends shall not form an angle of less than 90 degrees, and not have a radius of bend less than 8 in.? ● *NFPA 780, 4.9.5* ● *DA PAM 385-64, Table 17-4* ● *AFI 32-1065, A4.1.5*	Yes	
Above ground metallic utility lines are bonded to the structural steel or LPS before entering the ammunition facility? ● *DOD 6055.09-M, V2.E3.6* ● *DA PAM 385-64, 17-26.d* ● *AFMAN 91-201, 5.23.5* ● *AFI 32-1065, 15.2* ● *NAVSEA OP 5, 6-6.3.3*	Yes	
Nearest overhead (OH) powerline approximate distance is 50 feet or greater from structure? ● *DOD 6055.09-M, V2.E3.5* ● *DA PAM 385-64, 8.13*	Yes	

Inspection Criteria	BLDG1156	NOTES
Ground ring electrode installed around protected structure? ● *NFPA 780, 8.4.1* ● *DA PAM 385-64, 17-25* ● *AFI 32-1065, A4.1.15* ● *NAVSEA OP 5, 6-5.1*	Yes	
Ground ring electrode sized to Class II material requirements? ● *NFPA 780, 8.4.3* ● *DA PAM 382-64, 17-25* ● *AFI 32-1065, A4.1.15* ● *NAVSEA OP 5, 6-5.1*	Unknown	
Railroad tracks (if applicable) are bonded to the LPS system? ● *NFPA 780, 8.5.7* ● *DA PAM 385-64, 17-22.f* ● *NAVSEA OP 5, 6-6.3.1*	N/A	
Metallic access doors and doorframes are bonded to the ground ring electrode? ● *NFPA 780, 8.5.5.1* ● *NAVSEA OP 5, 6-6.3.4*	Yes	
Metallic fences are grounded if located within 6 ft. of protected structure or bonded to the grounding system of the structure? ● *NFPA 780, 8.8.1* ● *DA PAM 385-64, 17-22.e.* ● *NAVSEA OP 5, 6-6.3.2*	Yes	
Metallic masses within the sideflash distance are bonded to the LPS grounding? ● *NFPA 780, 8.5.2* ● *DA PAM 385-64, 17-22.b.(1)* ● *NAVSEA OP 5, 6-6*	Yes	
Facilities with perimeters larger than 300ft of structural steel not used for air terminals must use a mast or catenary type LPS? *AFI 32-1065, 14.5*	N/A	
Air terminals exceeding 24 in. in height shall require additional structural support? *NFPA 780, 4.6.2.2.2*	N/A	

Electrical Tests
Given the variability of structures and construction techniques across different locations, test techniques for evaluating lightning protection systems will be determined on a case-by-case basis. The head-end structure should be chosen to conduct some or all of the listed tests to assess the integrity of the existing lightning protection systems. Any deviations from the standard procedures should be documented accordingly.

Test Point Description (e.g. S.W. corner rod, BLDG 103)	Bond Testing (Recommended < 200mOhms)	Clamp-on Test (Recommended < 25 Ohms)	3-Point Fall Off Potential (Recommended < 25 Ohms)
Top Loop			4.88 Ohms
Bottom Loop			4.98 Ohms
G3			2.47 Ohms
G4			2.57 Ohms
G2			2.49 Ohms
G5			2.63 Ohms
G6			2.62 Ohms
G1			2.54 Ohms
G1-G6		4.72 Ohms	
G2-G5		4.68 Ohms	
G3-G4		4.64 Ohms	

General Recommendations.
Items identified by visual inspection and/or test that ought to be repaired:

System is good and passes inspection.

Building 1156

1156 Top

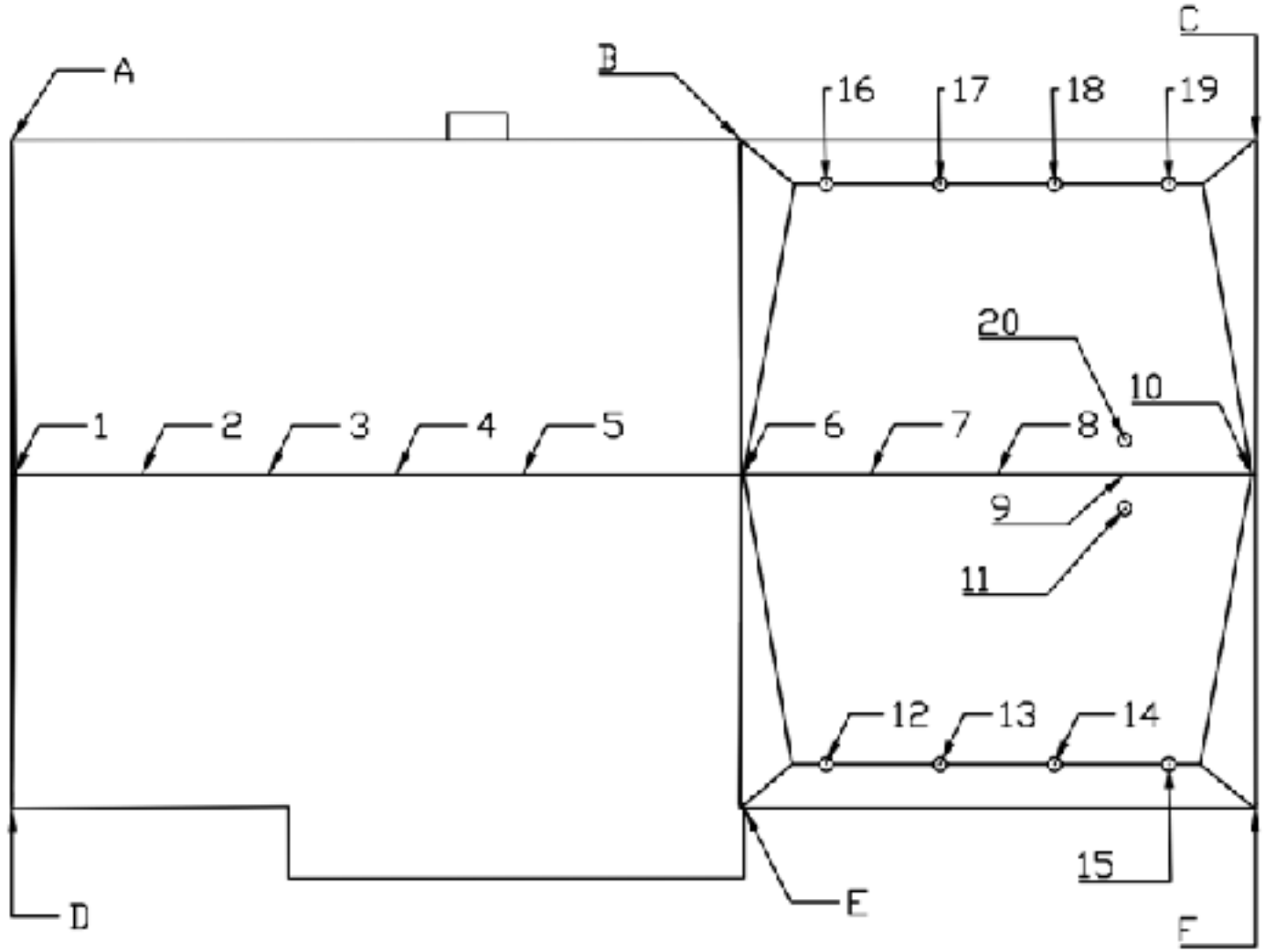

Legend:
Numbers (1-20) correspond to air terminals.
Letters (A-F) correspond to ground leads.
Red indicates a component needing repair.

Building 1156 Isometric Diagram

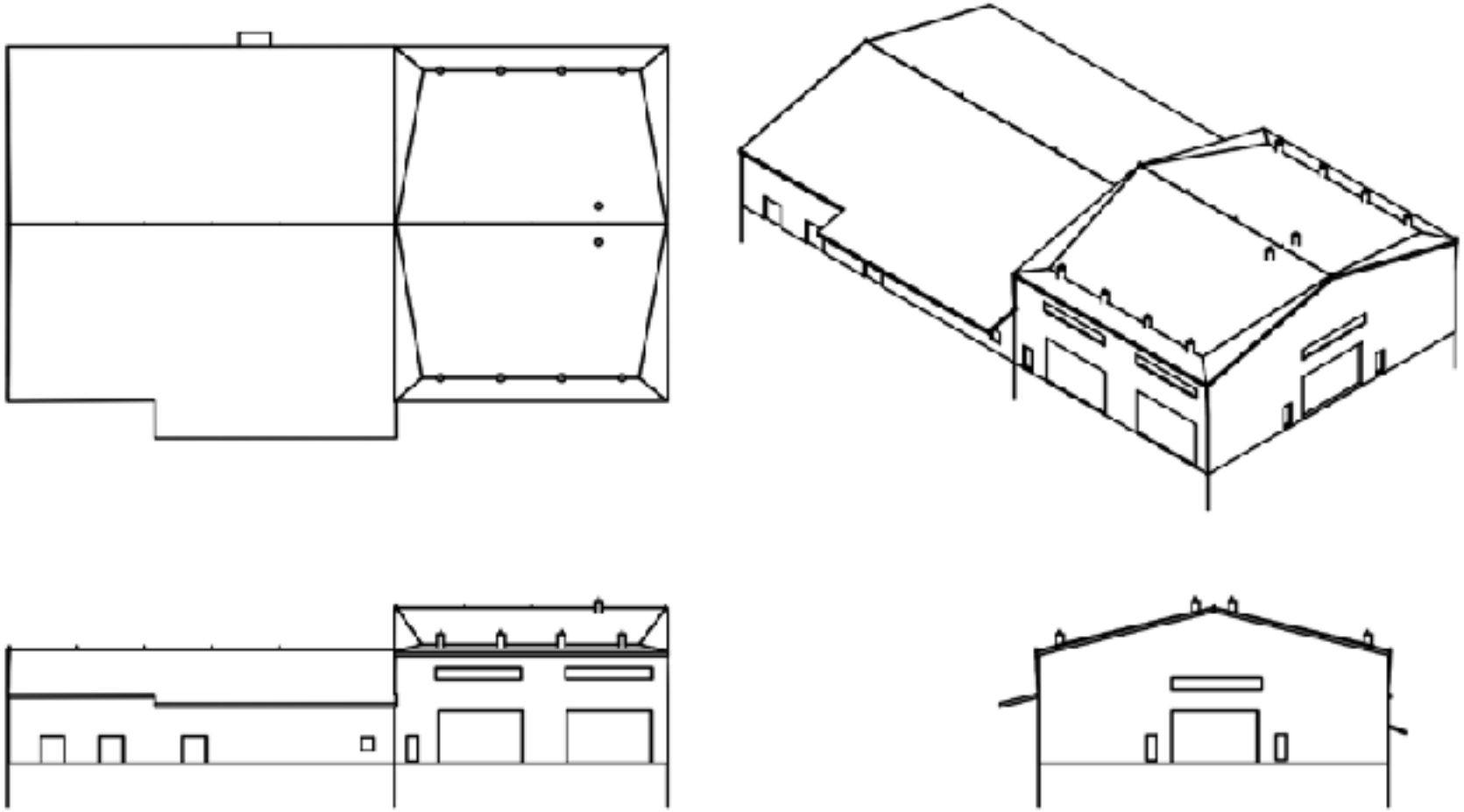

Visual Inspections:
Ensure that any anomalies are documented with accompanying pictures and/or supporting documentation to facilitate the quality assurance and validation process.

Inspection Criteria	BLDG 1157	NOTES
Power, data and communication lines are installed in a conduit and run underground at least 50 ft. before entering the facility? If the conduit is above grade before entry to the facility; the above grade portion of the conduit must be metallic and grounded. ● DOD 6055.09-M, V2.E3.6.2 ● DA PAM 385-64, 17-26.b ● AFMAN 91-201, 5.23.5 ● AFI 32-1065, 15.1 ● NAVSEA OP 5, 6-7.2	No	
Down conductors (if present on the inspected facility) must be secured every 3 feet or be provided with a positive means of support? ● *NFPA 780, 4.10* ● *DA PAM 385-64, 17-19.e*	Yes	
Down conductors must be protected from physical damage for a distance of 6 ft. above grade? ● *NFPA 780, 4.9.11* ● *AFI 32-1065, A4.1.8*	Yes	
Main conductor bends shall not form an angle of less than 90 degrees, and not have a radius of bend less than 8 in.? ● *NFPA 780, 4.9.5* ● *DA PAM 385-64, Table 17-4* ● *AFI 32-1065, A4.1.5*	Yes	
Above ground metallic utility lines are bonded to the structural steel or LPS before entering the facility? ● *DOD 6055.09-M, V2.E3.6* ● *DA PAM 385-64, 17-26.d* ● *AFMAN 91-201, 5.23.5* ● *AFI 32-1065, 15.2* ● *NAVSEA OP 5, 6-6.3.3*	Yes	
Nearest overhead (OH) powerline approximate distance is 50 feet or greater from structure? ● *DOD 6055.09-M, V2.E3.5* ● *DA PAM 385-64, 8.13*	Yes	

Inspection Criteria	BLDG 1157	NOTES
Ground ring electrode installed around protected structure? ● *NFPA 780, 8.4.1* ● *DA PAM 385-64, 17-25* ● *AFI 32-1065, A4.1.15* ● *NAVSEA OP 5, 6-5.1*	Yes	
Ground ring electrode sized to Class II material requirements? ● *NFPA 780, 8.4.3* ● *DA PAM 382-64, 17-25* ● *AFI 32-1065, A4.1.15* ● *NAVSEA OP 5, 6-5.1*	Unknown	
Railroad tracks (if applicable) are bonded to the LPS system? ● *NFPA 780, 8.5.7* ● *DA PAM 385-64, 17-22.f* ● *NAVSEA OP 5, 6-6.3.1*	N/A	
Metallic access doors and doorframes are bonded to the ground ring electrode? ● *NFPA 780, 8.5.5.1* ● *NAVSEA OP 5, 6-6.3.4*	Yes	
Metallic fences are grounded if located within 6 ft. of protected structure or bonded to the grounding system of the structure? ● *NFPA 780, 8.8.1* ● *DA PAM 385-64, 17-22.e.* ● *NAVSEA OP 5, 6-6.3.2*	N/A	
Metallic masses within the sideflash distance are bonded to the LPS grounding? ● *NFPA 780, 8.5.2* ● *DA PAM 385-64, 17-22.b.(1)* ● *NAVSEA OP 5, 6-6*	Yes	
Facilities with perimeters larger than 300ft of structural steel not used for air terminals must use a mast or catenary type LPS? *AFI 32-1065, 14.5*	N/A	
Air terminals exceeding 24 in. in height shall require additional structural support? *NFPA 780, 4.6.2.2.2*	N/A	

Electrical Tests
Given the variability of structures and construction techniques across different locations, test techniques for evaluating lightning protection systems will be determined on a case-by-case basis. The head-end structure should be chosen to conduct some or all of the listed tests to assess the integrity of the existing lightning protection systems. Any deviations from the standard procedures should be documented accordingly.

Test Point Description (e.g. S.W. corner rod, BLDG 103)	Bond Testing (Recommended < 200mOhms)	Clamp-on Test (Recommended < 25 Ohms)	3-Point Fall Off Potential (Recommended < 25 Ohms)
Loop A			5.23 Ohms
Loop B			5.26 Ohms
Loop C			5.21 Ohms
Loop D			5.21 Ohms
Loop E			5.24 Ohms
G1-G5			4.80 Ohms
G1			2.71 Ohms
G2			2.75 Ohms
G3			2.72 Ohms
G4			2.85 Ohms
G5			2.82 Ohms
G6			2.68 Ohms

General Recommendations.
Items identified by visual inspection and/or test that ought to be repaired:

System is in good condition and passes inspection.

Building 1157

Building 1157 Top

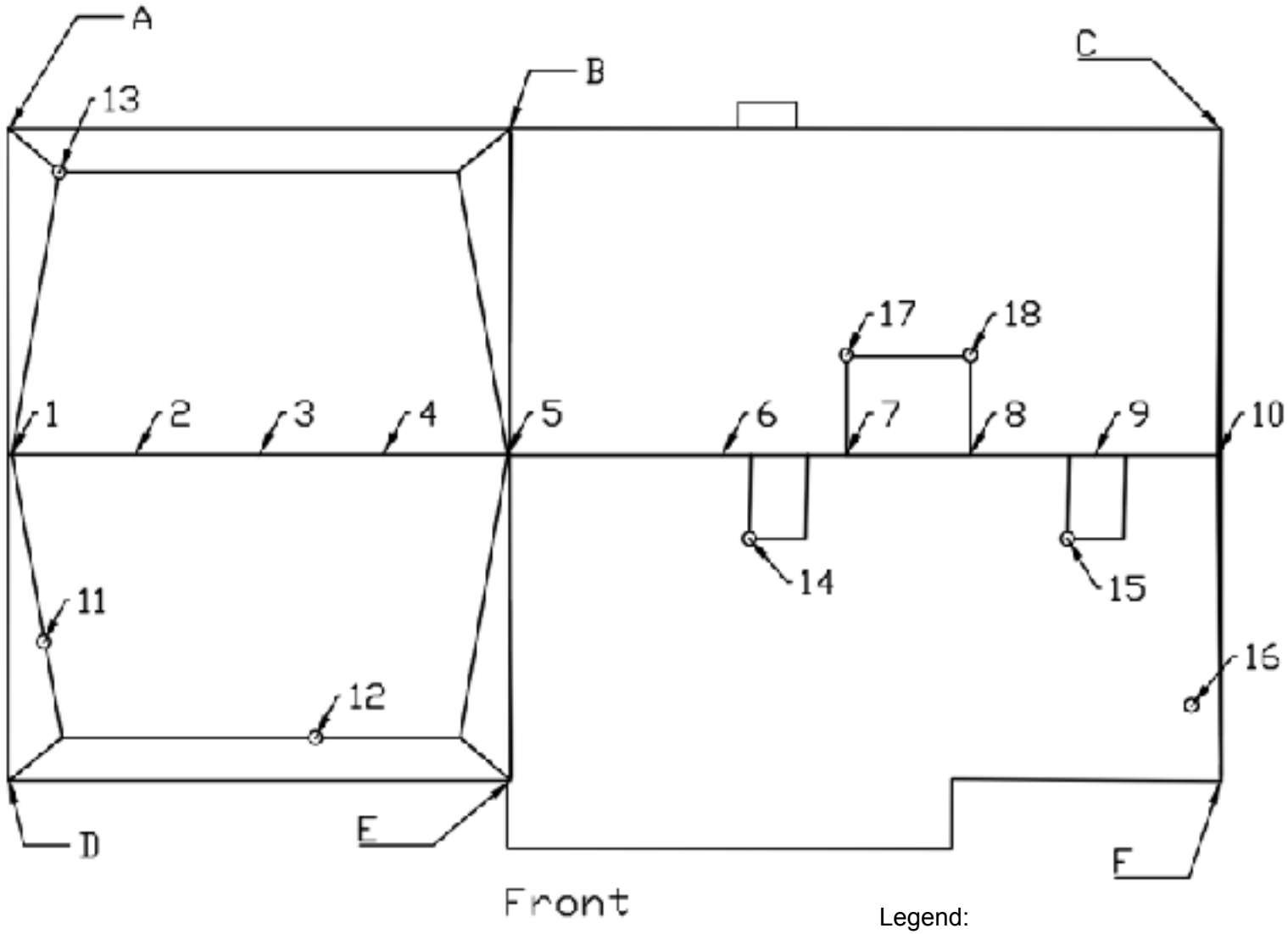

Legend:
Numbers (1-18) correspond to air terminals.
Letters (A-F) correspond with groundleads.
Red indicates a component needing repair.

Building 1157 Isometric Diagram

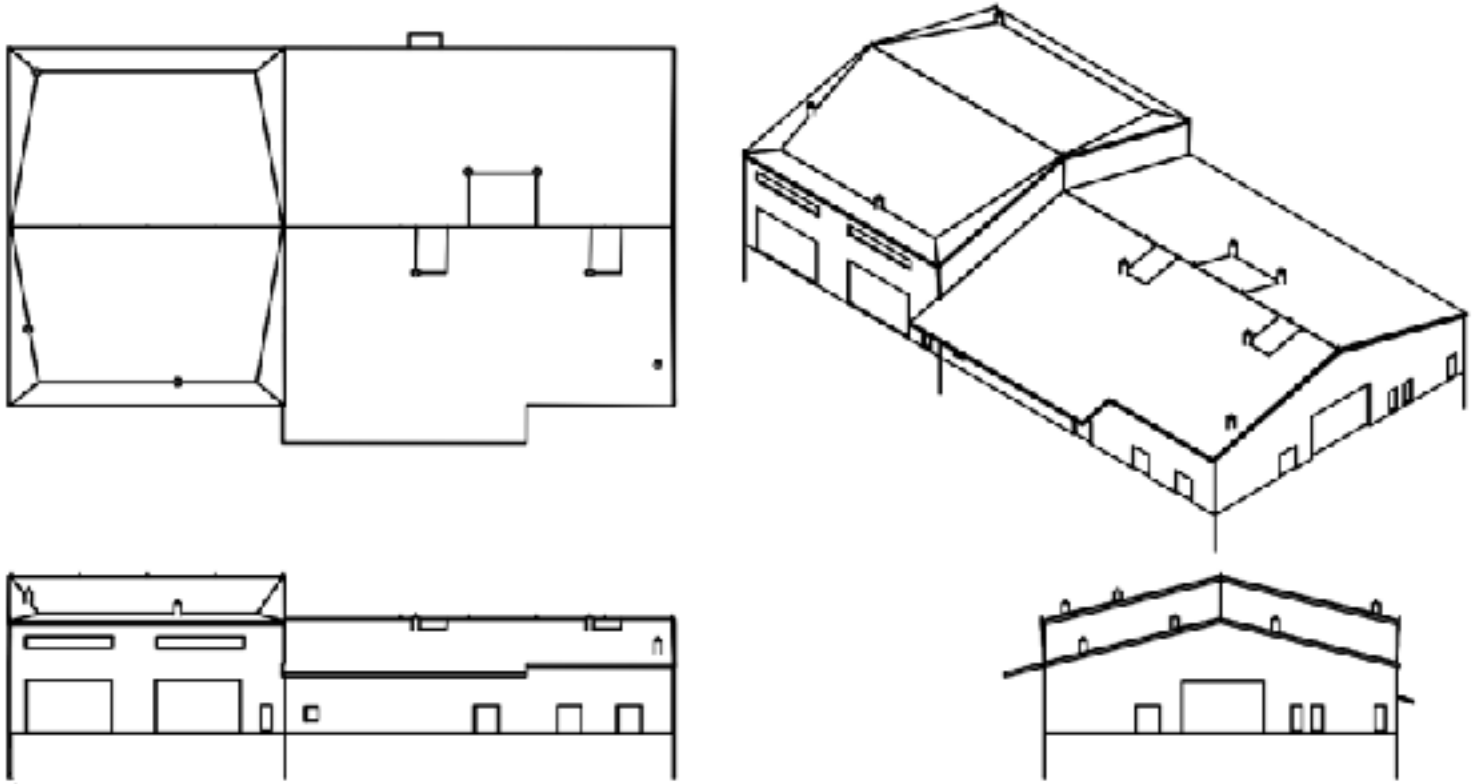

Visual Inspections:
Ensure that any anomalies are documented with accompanying pictures and/or supporting documentation to facilitate the quality assurance and validation process.

Inspection Criteria	BLDG 472	NOTES
Power, data and communication lines are installed in a conduit and run underground at least 50 ft. before entering the facility? If the conduit is above grade before entry to the facility; the above grade portion of the conduit must be metallic and grounded. ● DOD 6055.09-M, V2.E3.6.2 ● DA PAM 385-64, 17-26.b ● AFMAN 91-201, 5.23.5 ● AFI 32-1065, 15.1 ● NAVSEA OP 5, 6-7.2	Yes	
Down conductors (if present on the inspected facility) must be secured every 3 feet or be provided with a positive means of support? ● *NFPA 780, 4.10* ● *DA PAM 385-64, 17-19.e*	Yes	
Down conductors must be protected from physical damage for a distance of 6 ft. above grade? ● *NFPA 780, 4.9.11* ● *AFI 32-1065, A4.1.8*	Yes	
Main conductor bends shall not form an angle of less than 90 degrees, and not have a radius of bend less than 8 in.? ● *NFPA 780, 4.9.5* ● *DA PAM 385-64, Table 17-4* ● *AFI 32-1065, A4.1.5*	Yes	
Above ground metallic utility lines are bonded to the structural steel or LPS before entering the ammunition facility? ● *DOD 6055.09-M, V2.E3.6* ● *DA PAM 385-64, 17-26.d* ● *AFMAN 91-201, 5.23.5* ● *AFI 32-1065, 15.2* ● *NAVSEA OP 5, 6-6.3.3*	Yes	
Nearest overhead (OH) powerline approximate distance is 50 feet or greater from structure? ● *DOD 6055.09-M, V2.E3.5* ● *DA PAM 385-64, 8.13*	Yes	

Inspection Criteria	BLDG 472	NOTES
Ground ring electrode installed around protected structure? ● *NFPA 780, 8.4.1* ● *DA PAM 385-64, 17-25* ● *AFI 32-1065, A4.1.15* ● *NAVSEA OP 5, 6-5.1*	Yes	
Ground ring electrode sized to Class II material requirements? ● *NFPA 780, 8.4.3* ● *DA PAM 382-64, 17-25* ● *AFI 32-1065, A4.1.15* ● *NAVSEA OP 5, 6-5.1*	Unknown	
Railroad tracks (if applicable) are bonded to the LPS system? ● *NFPA 780, 8.5.7* ● *DA PAM 385-64, 17-22.f* ● *NAVSEA OP 5, 6-6.3.1*	N/A	
Metallic access doors and doorframes are bonded to the ground ring electrode? ● *NFPA 780, 8.5.5.1* ● *NAVSEA OP 5, 6-6.3.4*	Yes	
Metallic fences are grounded if located within 6 ft. of protected structure or bonded to the grounding system of the structure? ● *NFPA 780, 8.8.1* ● *DA PAM 385-64, 17-22.e.* ● *NAVSEA OP 5, 6-6.3.2*	N/A	
Metallic masses within the sideflash distance are bonded to the LPS grounding? ● *NFPA 780, 8.5.2* ● *DA PAM 385-64, 17-22.b.(1)* ● *NAVSEA OP 5, 6-6*	Yes	
Facilities with perimeters larger than 300ft of structural steel not used for air terminals must use a mast or catenary type LPS? *AFI 32-1065, 14.5*	N/A	
Air terminals exceeding 24 in. in height shall require additional structural support? *NFPA 780, 4.6.2.2.2*	N/A	

Electrical Tests
Given the variability of structures and construction techniques across different locations, test techniques for evaluating lightning protection systems will be determined on a case-by-case basis. The head-end structure should be chosen to conduct some or all of the listed tests to assess the integrity of the existing lightning protection systems. Any deviations from the standard procedures should be documented accordingly.

Test Point Description (e.g. S.W. corner rod, BLDG 103)	Bond Testing (Recommended < 200mOhms)	Clamp-on Test (Recommended < 25 Ohms)	3-Point Fall Off Potential (Recommended < 25 Ohms)
Position 1-7		0.27 Ohms	
Down lead E		Open Line (fail)	
Roof vent 2		Air Terminal Broken	
Roof vent 1		0.01 Ohms	
Roof vent 3		1.1 Ohms	
Roof vent 4		0.39 Ohms	
Roof vent 5		Missing Air Terminal (Open line)	
Down lead C		6.9 Ohms	
Vent 6 (Damaged vent falling down)		Open Line (fail)	
Ground lead B		6.8 Ohms	
Vent 6 to lower back		1.0 Ohms	
South West corner down lead		1.0 Ohms	
Ground resistance			0.93 Ohms
Roof vent 9		Missing connection (Open line)	

General Recommendations.
Items identified by visual inspection and/or test that ought to be repaired:

Air Terminal 5 is missing and should be replaced.
Air Terminal on the chimney (Vent 2) is disconnected and should be reattached.
Ground 1 position failed reading and should be re-terminated.
Roof vent 9 is not connected and needs to be tied into the system.
This system has too many faulty parts and fails its LPS inspection.

Building 472

Air terminal not connected.

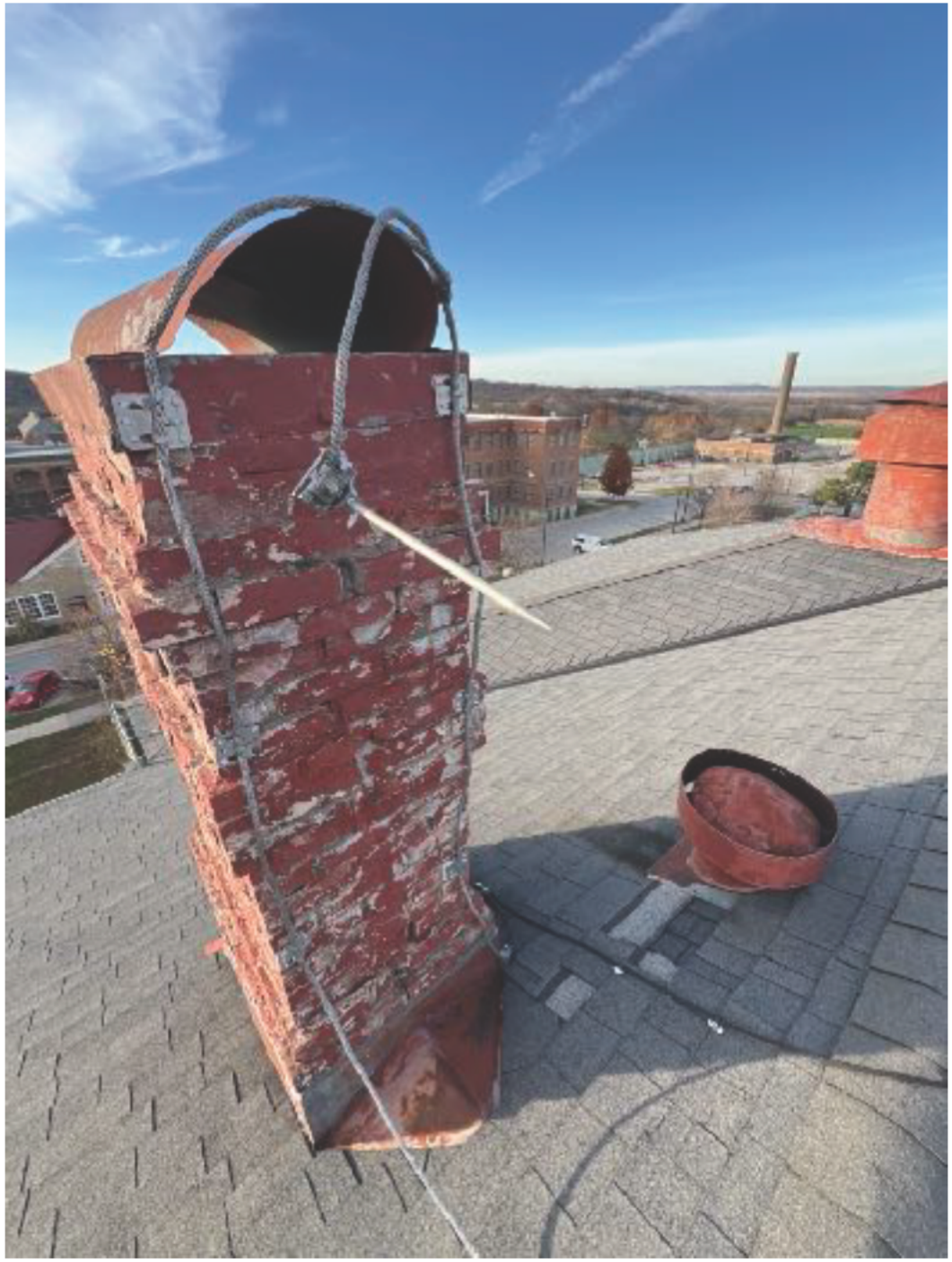

Building 472 Top

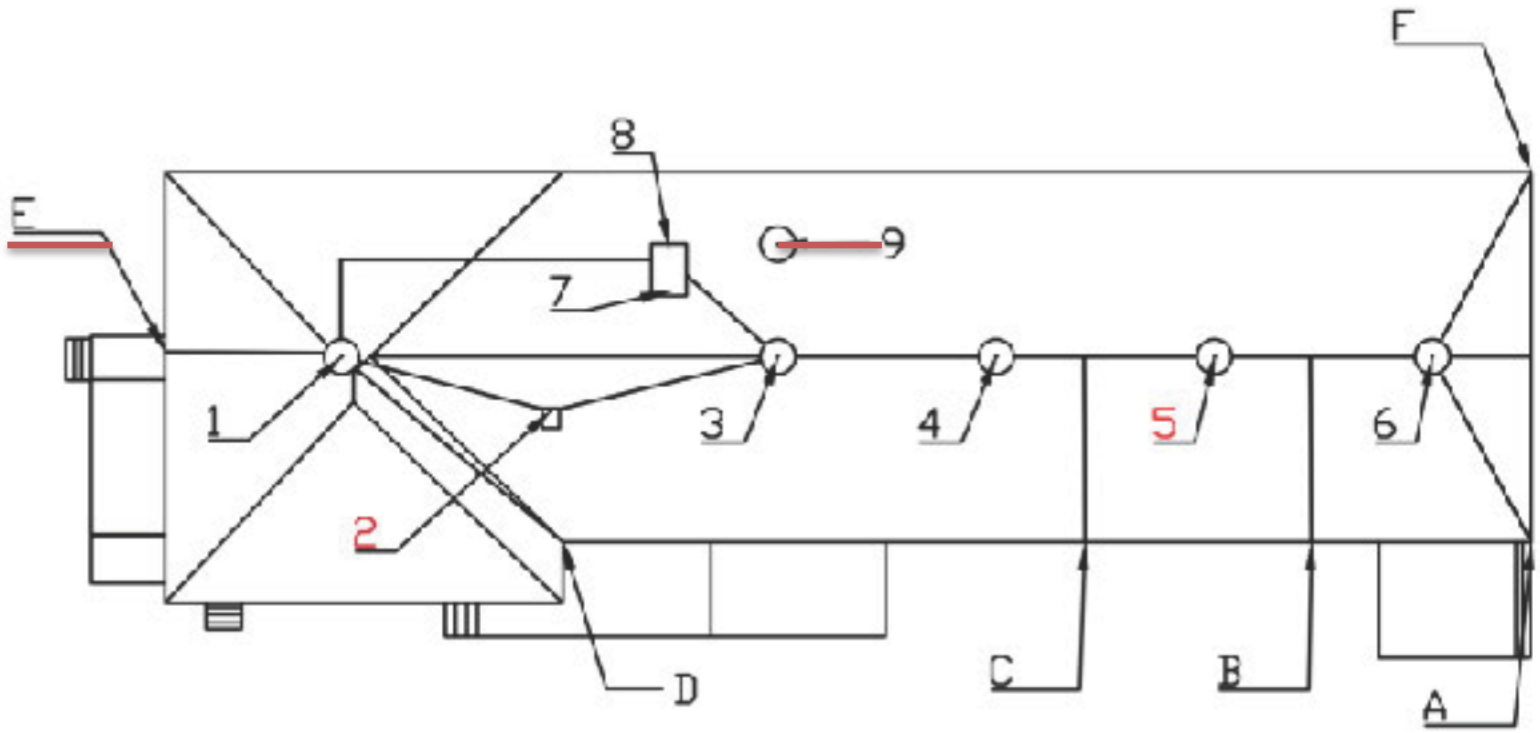

Legend:
Numbers (1-9) correspond to air terminals.
Letters (A-F) correspond to ground leads.
Red indicates a component needing repair.

Building 472

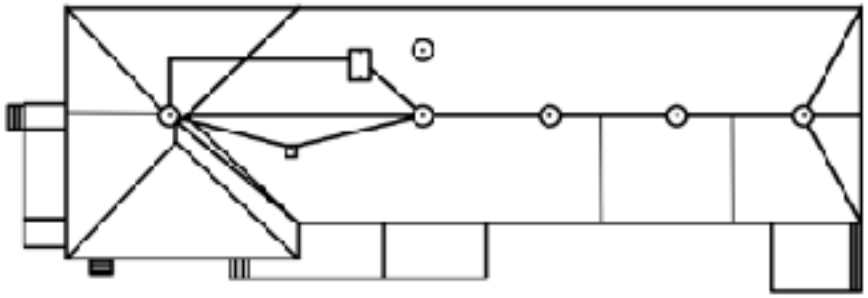

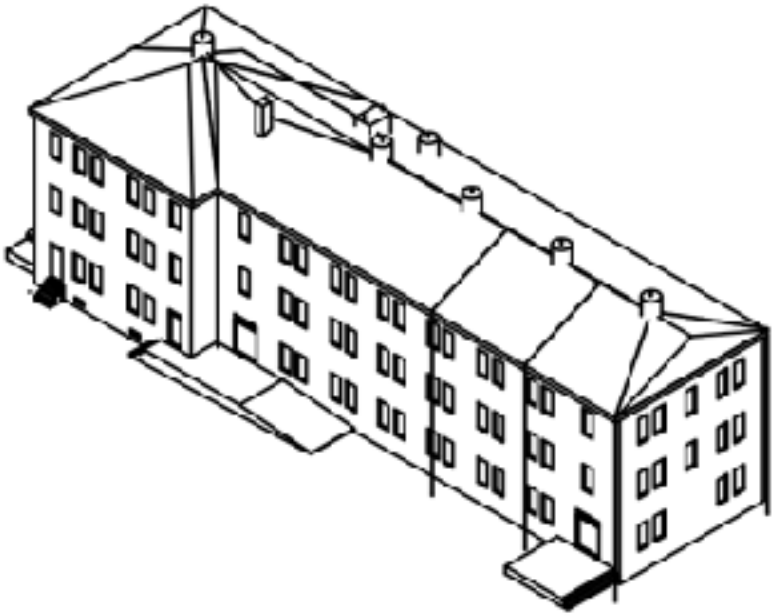

Visual Inspections:
Ensure that any anomalies are documented with accompanying pictures and/or supporting documentation to facilitate the quality assurance and validation process.

Inspection Criteria	1149 Sunshade	NOTES
Power, data and communication lines are installed in a conduit and run underground at least 50 ft. before entering the facility? If the conduit is above grade before entry to the facility; the above grade portion of the conduit must be metallic and grounded. ● DOD 6055.09-M, V2.E3.6.2 ● DA PAM 385-64, 17-26.b ● AFMAN 91-201, 5.23.5 ● AFI 32-1065, 15.1 ● NAVSEA OP 5, 6-7.2	Yes	
Down conductors (if present on the inspected facility) must be secured every 3 feet or be provided with a positive means of support? ● *NFPA 780, 4.10* ● *DA PAM 385-64, 17-19.e*	Yes	
Down conductors must be protected from physical damage for a distance of 6 ft. above grade? ● *NFPA 780, 4.9.11* ● *AFI 32-1065, A4.1.8*	Yes	
Main conductor bends shall not form an angle of less than 90 degrees, and not have a radius of bend less than 8 in.? ● *NFPA 780, 4.9.5* ● *DA PAM 385-64, Table 17-4* ● *AFI 32-1065, A4.1.5*	Yes	
Above ground metallic utility lines are bonded to the structural steel or LPS before entering the ammunition facility? ● *DOD 6055.09-M, V2.E3.6* ● *DA PAM 385-64, 17-26.d* ● *AFMAN 91-201, 5.23.5* ● *AFI 32-1065, 15.2* ● *NAVSEA OP 5, 6-6.3.3*	Yes	
Nearest overhead (OH) powerline approximate distance is 50 feet or greater from structure? ● *DOD 6055.09-M, V2.E3.5* ● *DA PAM 385-64, 8.13*	Yes	

Inspection Criteria	1149 Sunshade	NOTES
Ground ring electrode installed around protected structure? ● *NFPA 780, 8.4.1* ● *DA PAM 385-64, 17-25* ● *AFI 32-1065, A4.1.15* ● *NAVSEA OP 5, 6-5.1*	Yes	
Ground ring electrode sized to Class II material requirements? ● *NFPA 780, 8.4.3* ● *DA PAM 382-64, 17-25* ● *AFI 32-1065, A4.1.15* ● *NAVSEA OP 5, 6-5.1*	unknown	
Railroad tracks (if applicable) are bonded to the LPS system? ● *NFPA 780, 8.5.7* ● *DA PAM 385-64, 17-22.f* ● *NAVSEA OP 5, 6-6.3.1*	N/A	
Metallic access doors and doorframes are bonded to the ground ring electrode? ● *NFPA 780, 8.5.5.1* ● *NAVSEA OP 5, 6-6.3.4*	Yes	
Metallic fences are grounded if located within 6 ft. of protected structure or bonded to the grounding system of the structure? ● *NFPA 780, 8.8.1* ● *DA PAM 385-64, 17-22.e.* ● *NAVSEA OP 5, 6-6.3.2*	N/A	
Metallic masses within the sideflash distance are bonded to the LPS grounding? ● *NFPA 780, 8.5.2* ● *DA PAM 385-64, 17-22.b.(1)* ● *NAVSEA OP 5, 6-6*	Yes	
Facilities with perimeters larger than 300ft of structural steel not used for air terminals must use a mast or catenary type LPS? *AFI 32-1065, 14.5*	Yes	
Air terminals exceeding 24 in. in height shall require additional structural support? *NFPA 780, 4.6.2.2.2*	N/A	

Electrical Tests
Given the variability of structures and construction techniques across different locations, test techniques for evaluating lightning protection systems will be determined on a case-by-case basis. The head-end structure should be chosen to conduct some or all of the listed tests to assess the integrity of the existing lightning protection systems. Any deviations from the standard procedures should be documented accordingly.

Test Point Description (e.g. S.W. corner rod, BLDG 103)	Bond Testing (Recommended < 200mOhms)	Clamp-on Test (Recommended < 25 Ohms)	3-Point Fall Off Potential (Recommended < 25 Ohms)
NE Corner			1.14 Ohms
SE Corner (M)			1.32 Ohms
L			6.05 Ohms
K			1.15 Ohms
J			1.13 Ohms
I			1..15 Ohms
H			1.14 Ohms
G			1.14 Ohms
A			1.15 Ohms
B			1.14 Ohms
D			1.27 Ohms
E			1.18 Ohms
F			1.15 Ohms

General Recommendations.
Items identified by visual inspection and/or test that ought to be repaired:

System is good overall and passes inspection.

Building 1149 Sunshade

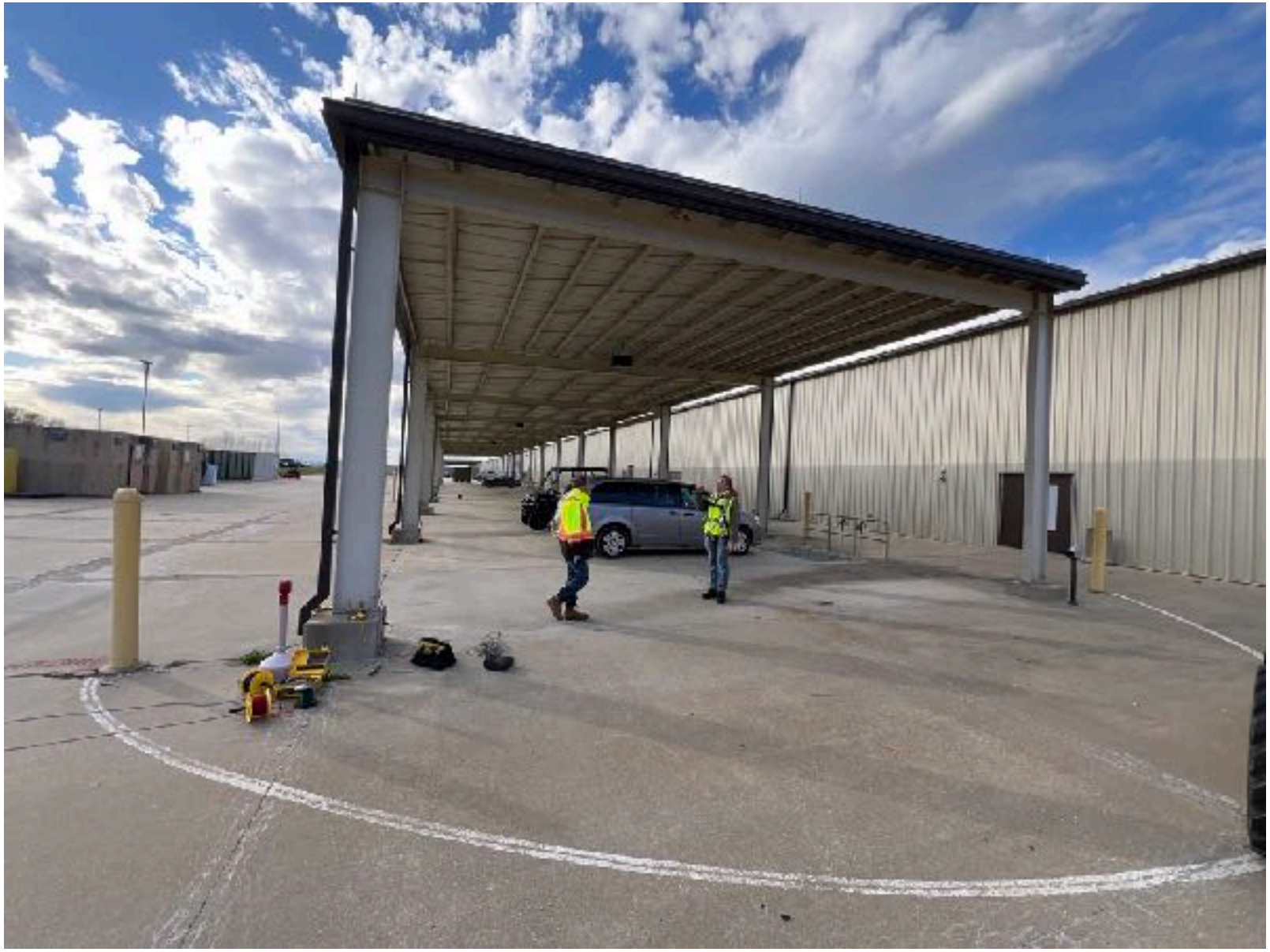

Building 1149 Sunshade Top

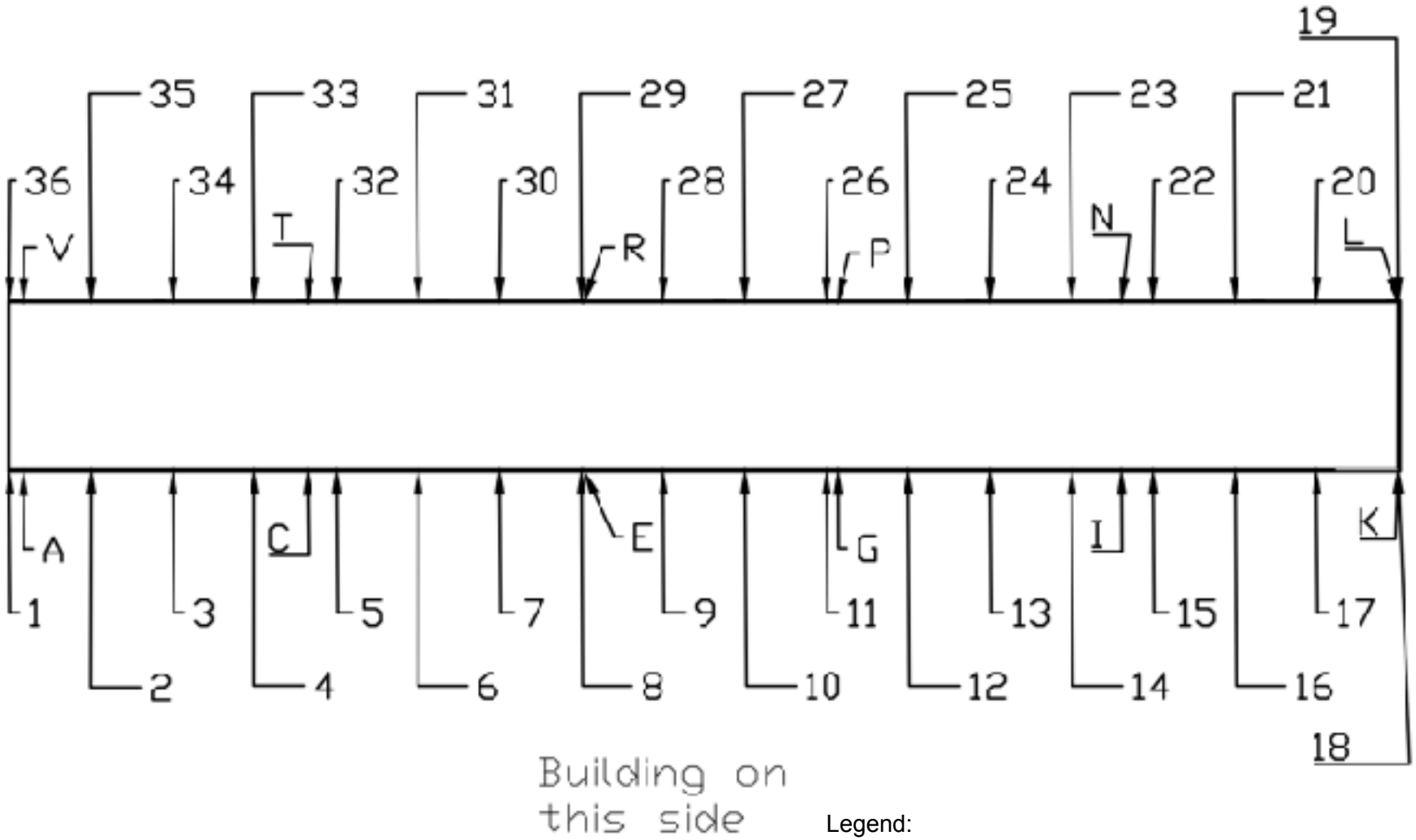

Legend:
Numbers (1-36) correspond to air terminals.
Letters (a-v) correspond to ground leads.
Red indicates a component needing repair.

Building 1149 Sunshade Isometric diagram.

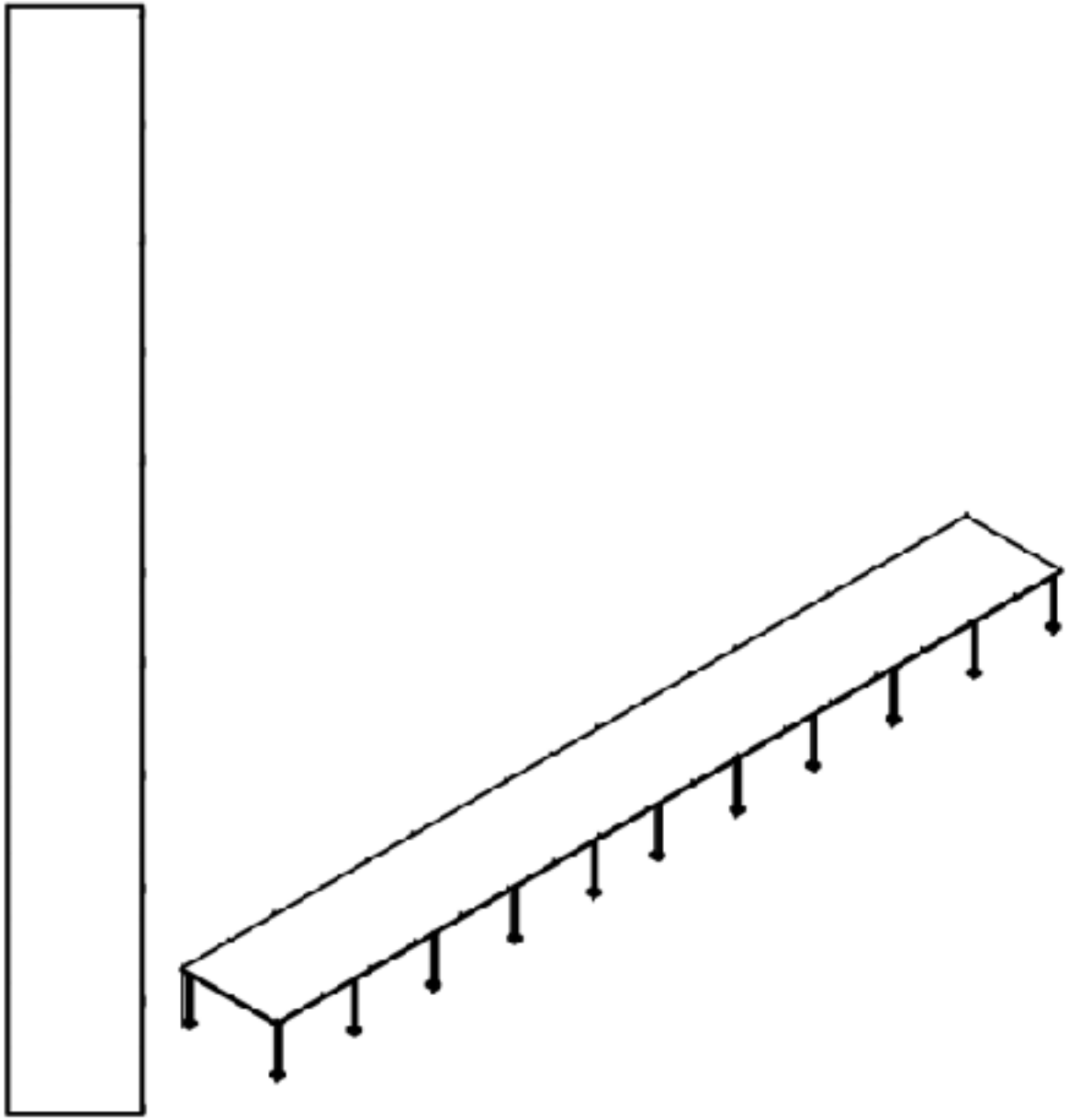

Visual Inspections:
Ensure that any anomalies are documented with accompanying pictures and/or supporting documentation to facilitate the quality assurance and validation process.

Inspection Criteria	BLDG 1151	NOTES
Power, data and communication lines are installed in a conduit and run underground at least 50 ft. before entering the facility? If the conduit is above grade before entry to the facility; the above grade portion of the conduit must be metallic and grounded. ● DOD 6055.09-M, V2.E3.6.2 ● DA PAM 385-64, 17-26.b ● AFMAN 91-201, 5.23.5 ● AFI 32-1065, 15.1 ● NAVSEA OP 5, 6-7.2	Yes	
Down conductors (if present on the inspected facility) must be secured every 3 feet or be provided with a positive means of support? ● *NFPA 780, 4.10* ● *DA PAM 385-64, 17-19.e*	Yes	
Down conductors must be protected from physical damage for a distance of 6 ft. above grade? ● *NFPA 780, 4.9.11* ● *AFI 32-1065, A4.1.8*	Yes	
Main conductor bends shall not form an angle of less than 90 degrees, and not have a radius of bend less than 8 in.? ● *NFPA 780, 4.9.5* ● *DA PAM 385-64, Table 17-4* ● *AFI 32-1065, A4.1.5*	Yes	
Above ground metallic utility lines are bonded to the structural steel or LPS before entering the ammunition facility? ● *DOD 6055.09-M, V2.E3.6* ● *DA PAM 385-64, 17-26.d* ● *AFMAN 91-201, 5.23.5* ● *AFI 32-1065, 15.2* ● *NAVSEA OP 5, 6-6.3.3*	Yes	
Nearest overhead (OH) powerline approximate distance is 50 feet or greater from structure? ● *DOD 6055.09-M, V2.E3.5* ● *DA PAM 385-64, 8.13*	Yes	

Inspection Criteria	BLDG 1151	NOTES
Ground ring electrode installed around protected structure? ● *NFPA 780, 8.4.1* ● *DA PAM 385-64, 17-25* ● *AFI 32-1065, A4.1.15* ● *NAVSEA OP 5, 6-5.1*	Yes	
Ground ring electrode sized to Class II material requirements? ● *NFPA 780, 8.4.3* ● *DA PAM 382-64, 17-25* ● *AFI 32-1065, A4.1.15* ● *NAVSEA OP 5, 6-5.1*	Yes	
Railroad tracks (if applicable) are bonded to the LPS system? ● *NFPA 780, 8.5.7* ● *DA PAM 385-64, 17-22.f* ● *NAVSEA OP 5, 6-6.3.1*	N/A	
Metallic access doors and doorframes are bonded to the ground ring electrode? ● *NFPA 780, 8.5.5.1* ● *NAVSEA OP 5, 6-6.3.4*	Yes	
Metallic fences are grounded if located within 6 ft. of protected structure or bonded to the grounding system of the structure? ● *NFPA 780, 8.8.1* ● *DA PAM 385-64, 17-22.e.* ● *NAVSEA OP 5, 6-6.3.2*	N/A	
Metallic masses within the sideflash distance are bonded to the LPS grounding? ● *NFPA 780, 8.5.2* ● *DA PAM 385-64, 17-22.b.(1)* ● *NAVSEA OP 5, 6-6*	Yes	
Facilities with perimeters larger than 300ft of structural steel not used for air terminals must use a mast or catenary type LPS? *AFI 32-1065, 14.5*	N/A	
Air terminals exceeding 24 in. in height shall require additional structural support? *NFPA 780, 4.6.2.2.2*	N/A	

Electrical Tests
Given the variability of structures and construction techniques across different locations, test techniques for evaluating lightning protection systems will be determined on a case-by-case basis. The head-end structure should be chosen to conduct some or all of the listed tests to assess the integrity of the existing lightning protection systems. Any deviations from the standard procedures should be documented accordingly.

Test Point Description (e.g. S.W. corner rod, BLDG 103)	Bond Testing (Recommended < 200mOhms)	Clamp-on Test (Recommended < 25 Ohms)	3-Point Fall Off Potential (Recommended < 25 Ohms)
Points 17-21			0.87 Ohms
Points 16-17			2.65 Ohms
Points 12-16			2.65 Ohms
Points 9-12			0.88 Ohms
Point 7			0.89 Ohms
Point 1			0.88 Ohms
Upper loop		4.79 Ohms	
Lower loop		4.79 Ohms	

General Recommendations.
Items identified by visual inspection and/or test that ought to be repaired:

System is good overall and passes inspection.

Building 1151

Building 1151 Top

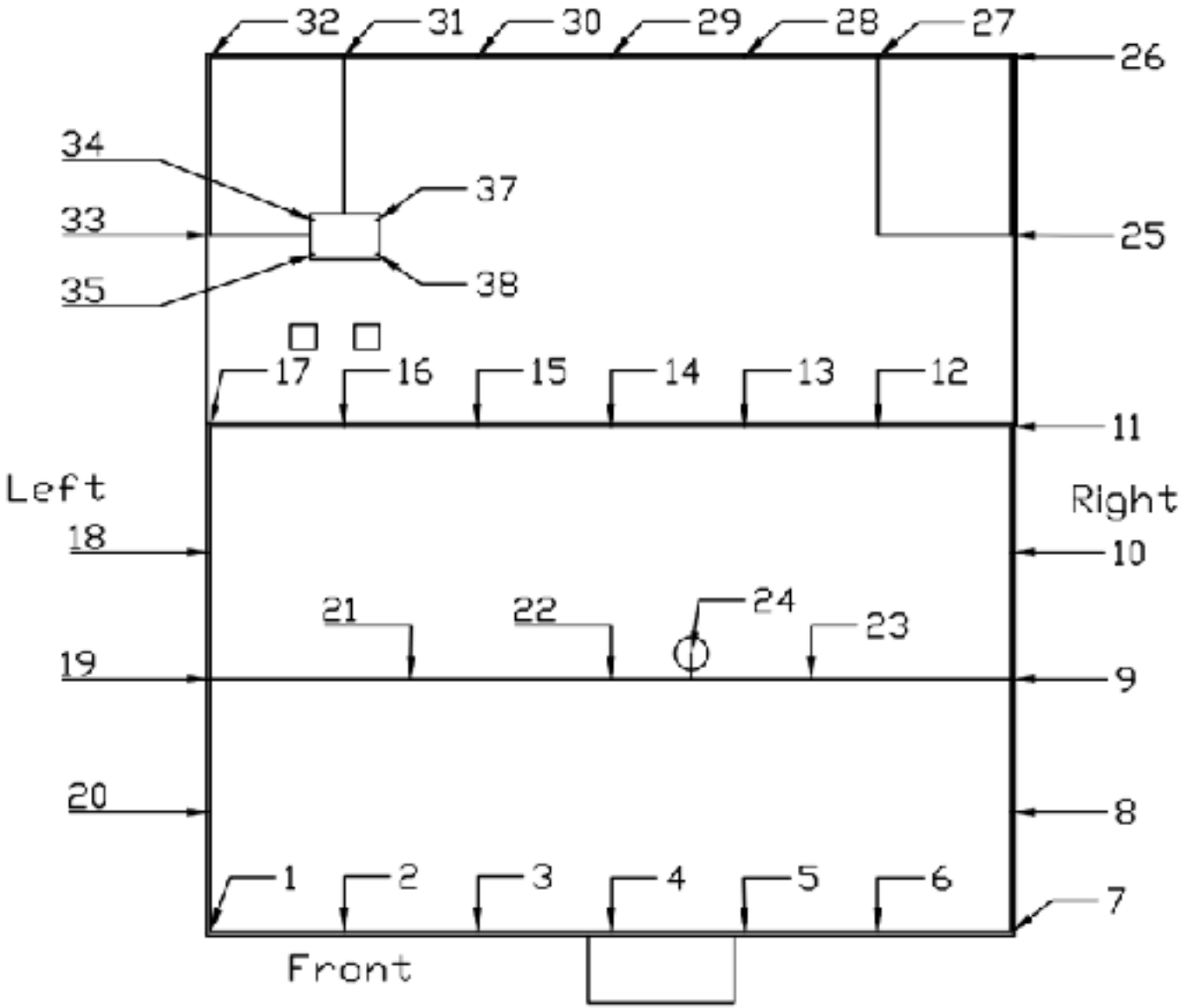

Legend:
Numbers (1-38) correspond to air terminals.

Building 1151 Isometric Diagram

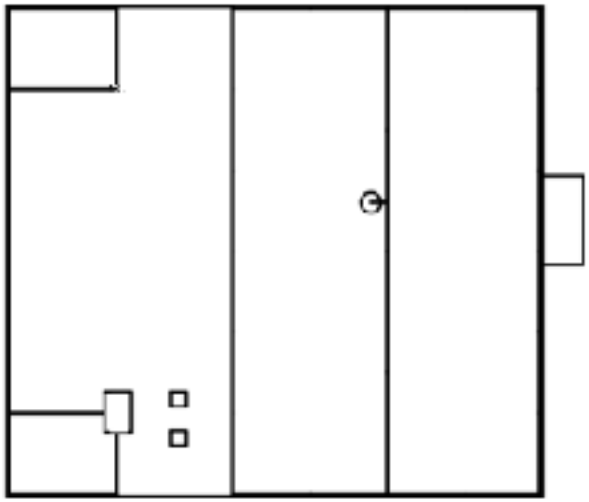

Top

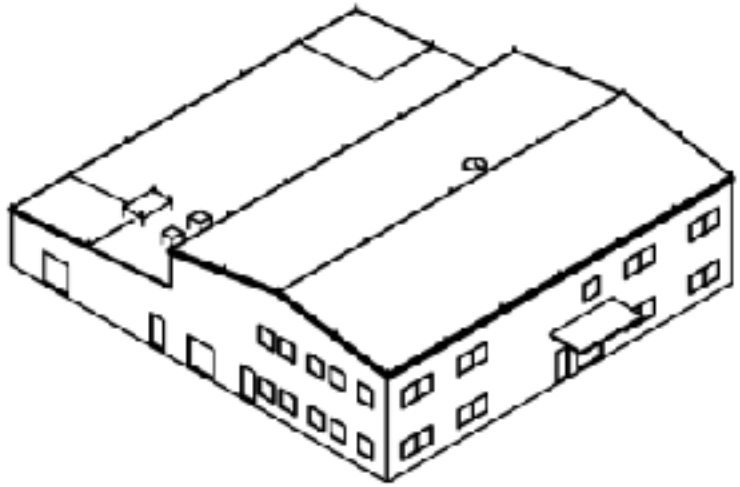

Left

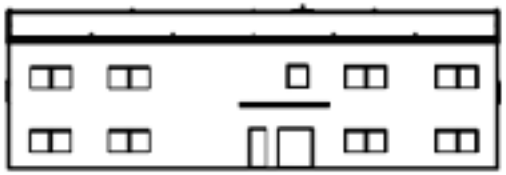

Front