POLEBRIDGE AS-BUILT UTILITY PLANS

THE INCLUDED PLANS ARE PROVIDED FOR REFERENCE ONLY – FIELD CONDITIONS WILL VARY. NPS WILL NOT GUARUNTEE THE ACCURACY OR COMPLETENESS OF THESE PLANS. NPS MAPPED UNDERGROUND UTILITIES TO THE BEST OF THEIR ABILITY USING GROUND PENETRATING RADAR, UNDERGROUND UTILITY LOCATORS, PHOTOGRAPHIC RECORDS, AND AS-BUILT DRAWINGS.

PLEASE NOTE THAT THE EXISTING WATER LINES WERE INTSALLED IN AT LEAST FIVE DIFFERENT PHASES. SOME UTILITIES SHOWN ON THE FOLLOWING PLANS MAY HAVE BEEN ALTERED, ABANDONED, OR NEVER CONSTRUCTED.

NPS OPERATES THE WATER, SEWER, PROPANE, ELECTRICAL, AND COMMUNICATIONS INFASTRUCTURE IN THE POLEBRIDGE AREA. TELEPHONE LINES WILL BE MARKED BY THEIR OPERATOR.

COORDINATE WITH NPS AND CALL 811 AT LEAST FIVE DAYS PRIOR TO ANY GROUND DISTURBING ACTIVITY.

1980 GLAC_117_41048_B PARKWIDE WATER SYSTEMS POLEBRIDGE SHEETS 40-45

PLANS FROM BEFORE THE 1988 RED BENCH FIRE - MOST BUILDINGS WERE LOST IN FIRE

P. 40 - 4" DIP WATER LINE UP THE HILL CORRECT

P. 40 - DETAIL A SHOWING CONNECTION OF INFILTRATION AND PIPES IN AREA IS CORRECT

P. 41 - WATER LINE CORRECT UNTIL POINT WHERE IT WAS REPLACED AFTER 1990

P. 42 - WATER TANK SHOWN ON PLANS WAS REPLACED IN 2001

P. 43 - WATER INFILTRATION SYSTEM DETAILS ARE CORRECT

P. 44-45 WATER CHLORINATION SHEETS REPLACED BY 1989 DRAWINGS

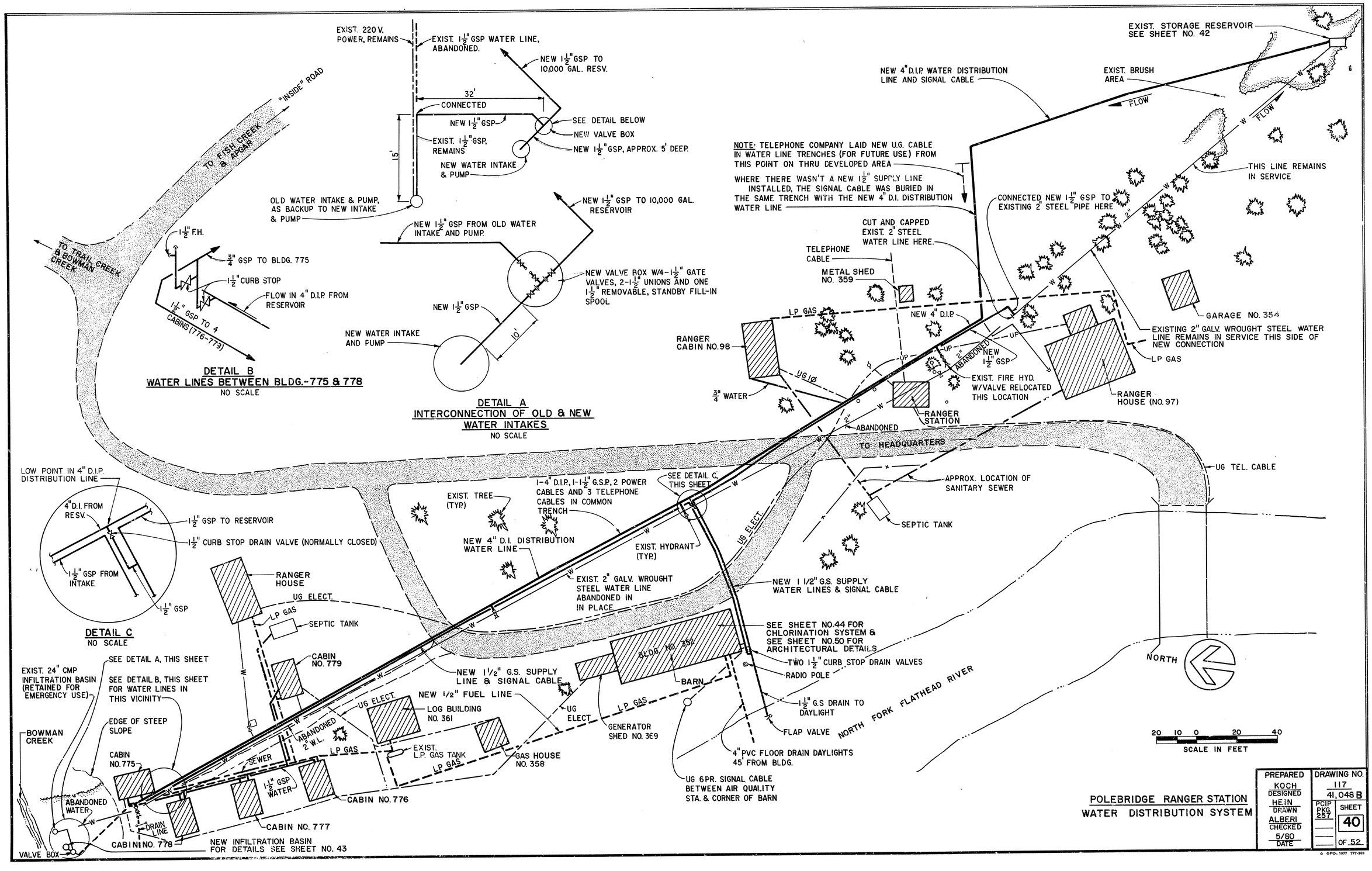
EXIST. 220 V. POWER, REMAINS
EXIST. 1 1/2" GSP WATER LINE, ABANDONED.
NEW 1 1/2" GSP TO 10,000 GAL. RESV.
32'
CONNECTED
NEW 1 1/2" GSP
SEE DETAIL BELOW
NEW VALVE BOX
EXIST. 1 1/2" GSP, REMAINS
NEW 1 1/2" GSP, APPROX. 5' DEEP.
NEW WATER INTAKE & PUMP
15'
OLD WATER INTAKE & PUMP, AS BACKUP TO NEW INTAKE & PUMP
NEW 1 1/2" GSP TO 10,000 GAL. RESERVOIR
NEW 1 1/2" GSP FROM OLD WATER INTAKE AND PUMP.
NEW VALVE BOX W/4-1 1/2" GATE VALVES, 2-1 1/2" UNIONS AND ONE 1 1/2" REMOVABLE, STANDBY FILL-IN SPOOL
NEW 1 1/2" GSP
NEW WATER INTAKE AND PUMP
10'
DETAIL A
INTERCONNECTION OF OLD & NEW WATER INTAKES
NO SCALE
"INSIDE" ROAD
TO FISH CREEK & APGAR
TO TRAIL CREEK & BOWMAN CREEK
1 1/2" F.H.
3/4" GSP TO BLDG. 775
1 1/2" CURB STOP
FLOW IN 4" D.I.P. FROM RESERVOIR
1 1/2" GSP TO 4 CABINS (776-779)
DETAIL B
WATER LINES BETWEEN BLDG.-775 & 778
NO SCALE
EXIST. STORAGE RESERVOIR SEE SHEET NO. 42
NEW 4" D.I.P. WATER DISTRIBUTION LINE AND SIGNAL CABLE
EXIST. BRUSH AREA
FLOW
NOTE: TELEPHONE COMPANY LAID NEW U.G. CABLE IN WATER LINE TRENCHES (FOR FUTURE USE) FROM THIS POINT ON THRU DEVELOPED AREA
WHERE THERE WASN'T A NEW 1 1/2" SUPPLY LINE INSTALLED, THE SIGNAL CABLE WAS BURIED IN THE SAME TRENCH WITH THE NEW 4" D.I. DISTRIBUTION WATER LINE
THIS LINE REMAINS IN SERVICE
CONNECTED NEW 1 1/2" GSP TO EXISTING 2" STEEL PIPE HERE
CUT AND CAPPED EXIST. 2" STEEL WATER LINE HERE.
TELEPHONE CABLE
METAL SHED NO. 359
GARAGE NO. 354
EXISTING 2" GALV. WROUGHT STEEL WATER LINE REMAINS IN SERVICE THIS SIDE OF NEW CONNECTION
LP GAS
NEW 4" D.I.P.
RANGER CABIN NO. 98
UG 10
3/4" WATER
NEW 1 1/2" GSP
ABANDONED
EXIST. FIRE HYD. W/VALVE RELOCATED THIS LOCATION
RANGER HOUSE (NO. 97)
RANGER STATION
ABANDONED
TO HEADQUARTERS
UG TEL. CABLE
APPROX. LOCATION OF SANITARY SEWER
SEPTIC TANK
LOW POINT IN 4" D.I.P. DISTRIBUTION LINE
4" D.I. FROM RESV.
1 1/2" GSP TO RESERVOIR
1 1/2" CURB STOP DRAIN VALVE (NORMALLY CLOSED)
1 1/2" GSP FROM INTAKE
1 1/2" GSP
DETAIL C
NO SCALE
EXIST. TREE (TYP.)
1-4" D.I.P., 1-1 1/2" G.S.P., 2 POWER CABLES AND 3 TELEPHONE CABLES IN COMMON TRENCH
SEE DETAIL C, THIS SHEET
NEW 4" D.I. DISTRIBUTION WATER LINE
EXIST. HYDRANT (TYP.)
UG ELECT.
EXIST. 2" GALV. WROUGHT STEEL WATER LINE ABANDONED IN IN PLACE
NEW 1 1/2" G.S. SUPPLY WATER LINES & SIGNAL CABLE
RANGER HOUSE
UG ELECT.
LP GAS
SEPTIC TANK
CABIN NO. 779
SEE SHEET NO. 44 FOR CHLORINATION SYSTEM & SEE SHEET NO. 50 FOR ARCHITECTURAL DETAILS
BLDG. NO. 362
TWO 1 1/2" CURB STOP DRAIN VALVES
RADIO POLE
BARN
NORTH
EXIST. 24" CMP INFILTRATION BASIN (RETAINED FOR EMERGENCY USE)
SEE DETAIL A, THIS SHEET
SEE DETAIL B, THIS SHEET FOR WATER LINES IN THIS VICINITY
NEW 1 1/2" G.S. SUPPLY LINE & SIGNAL CABLE
NEW 1/2" FUEL LINE
LOG BUILDING NO. 361
UG ELECT.
LP GAS
GENERATOR SHED NO. 369
1 1/2" G.S DRAIN TO DAYLIGHT
FLAP VALVE
NORTH FORK FLATHEAD RIVER
BOWMAN CREEK
EDGE OF STEEP SLOPE
CABIN NO. 775
ABANDONED 2" W.L.
SEWER
LP GAS
EXIST. L.P. GAS TANK
GAS HOUSE NO. 358
4" PVC FLOOR DRAIN DAYLIGHTS 45' FROM BLDG.
UG 6PR. SIGNAL CABLE BETWEEN AIR QUALITY STA. & CORNER OF BARN
1 1/2" GSP WATER
CABIN NO. 776
ABANDONED WATER
DRAIN LINE
CABIN NO. 777
CABIN NO. 778
NEW INFILTRATION BASIN FOR DETAILS SEE SHEET NO. 43
VALVE BOX
20 10 0 20 40
SCALE IN FEET
POLEBRIDGE RANGER STATION
WATER DISTRIBUTION SYSTEM
PREPARED
KOCH
DESIGNED
HEIN
DRAWN
ALBERI
CHECKED
5/80
DATE
DRAWING NO.
117
41,048 B
PCIP PKG 257
SHEET
40
OF 52

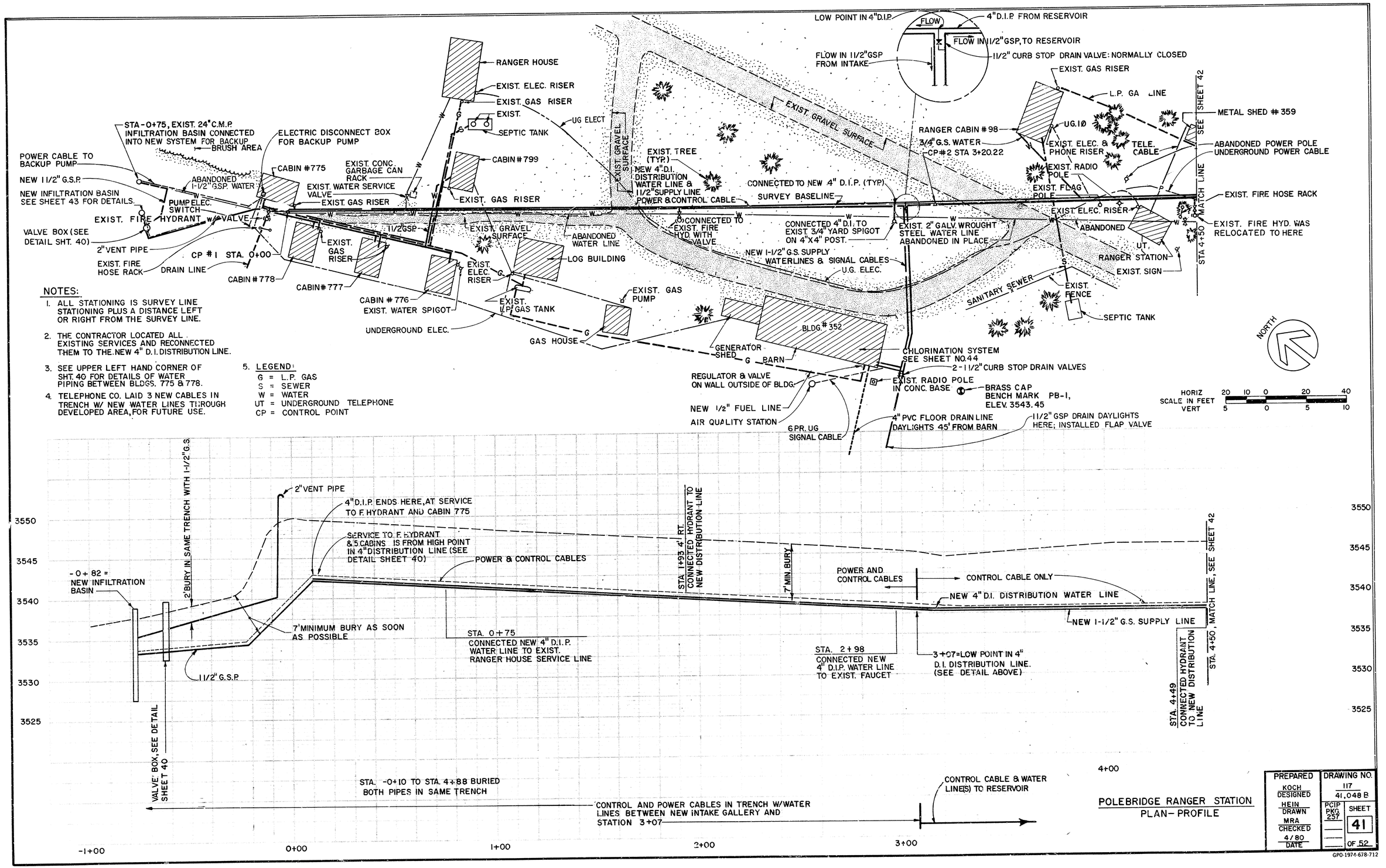

POLEBRIDGE RANGER STATION
PLAN- PROFILE

PREPARED	DRAWING NO.
KOCH DESIGNED	117
HEIN DRAWN	41,048 B
MRA CHECKED	PCIP PKG. 257 — SHEET 41
4/80 DATE	OF 52

GPO-1974-678-712

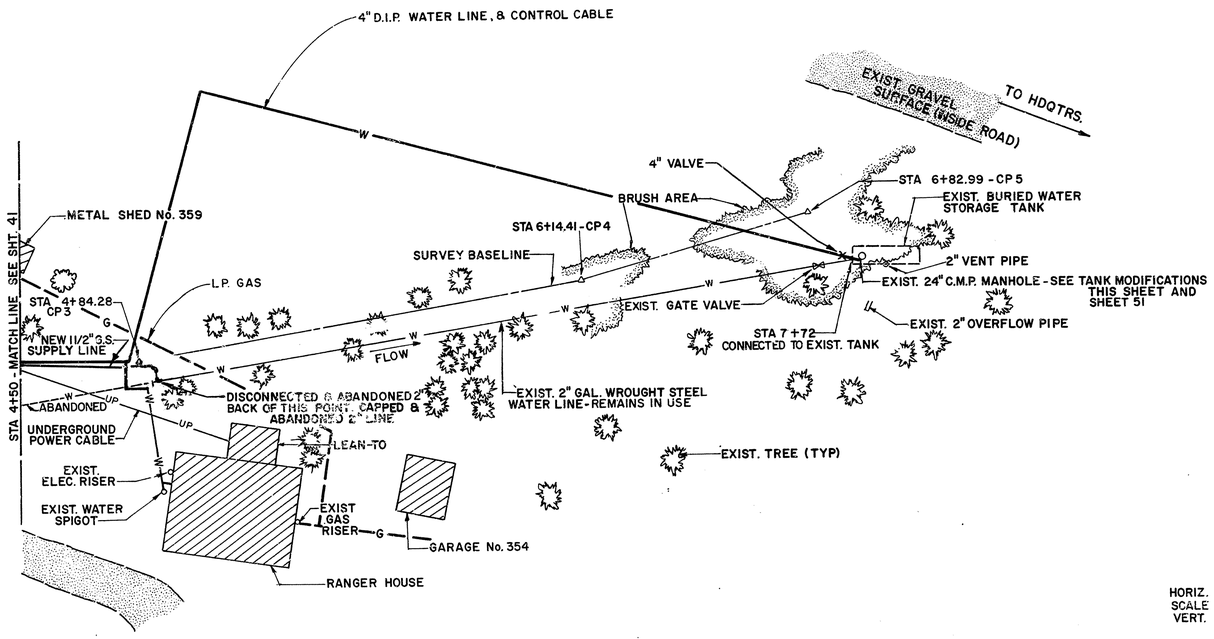

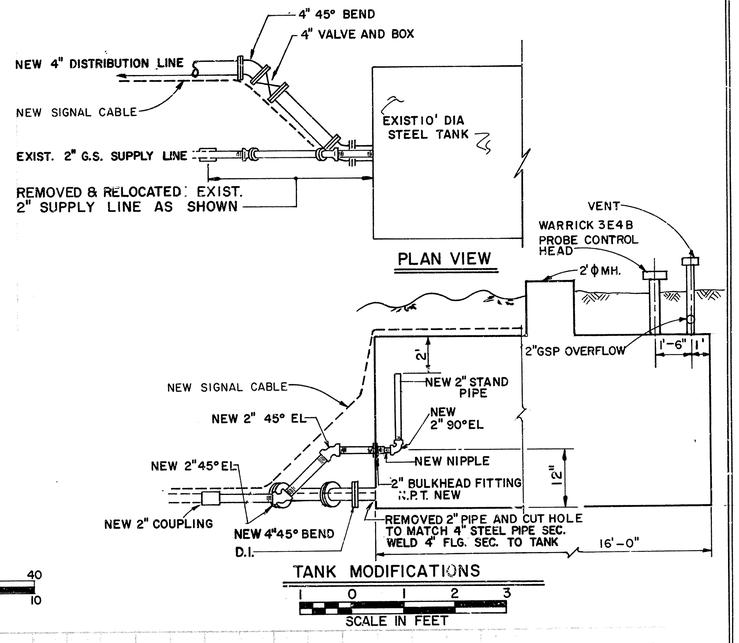

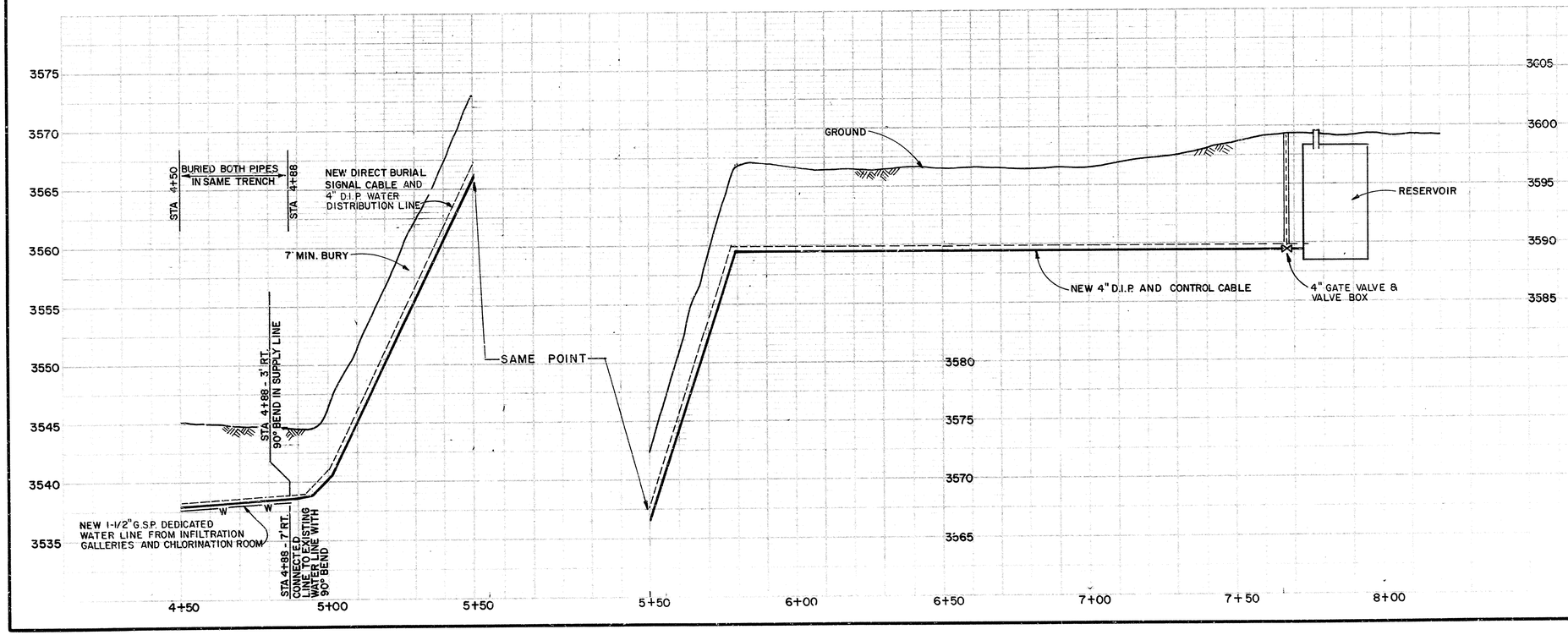

POLEBRIDGE RANGER STATION
PLAN-PROFILE
& TANK MODIFICATION DETAILS

PREPARED	DRAWING NO.
KOCH DESIGNED	117
FERGUSON DRAWN	41,048 B
MRA CHECKED	PCIP PKG 257 — SHEET 42 OF 52
5/80 DATE	

GPO-1974 678-712

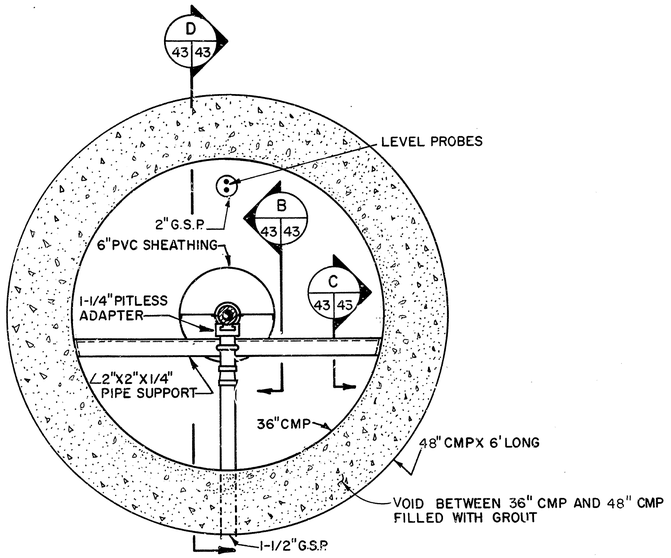

SECTION A 43 43

1 0 1
SCALE IN FEET

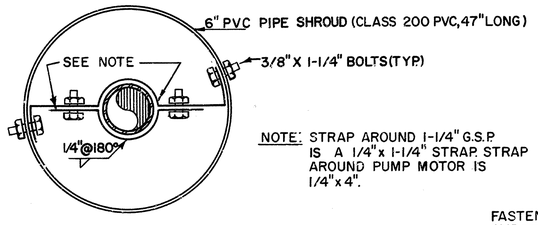

NOTE: STRAP AROUND 1-1/4" G.S.P. IS A 1/4" x 1-1/4" STRAP. STRAP AROUND PUMP MOTOR IS 1/4" x 4".

6" SHEATHING PIPE SUPPORT DETAIL

1 0 1 2 3
SCALE IN INCHES

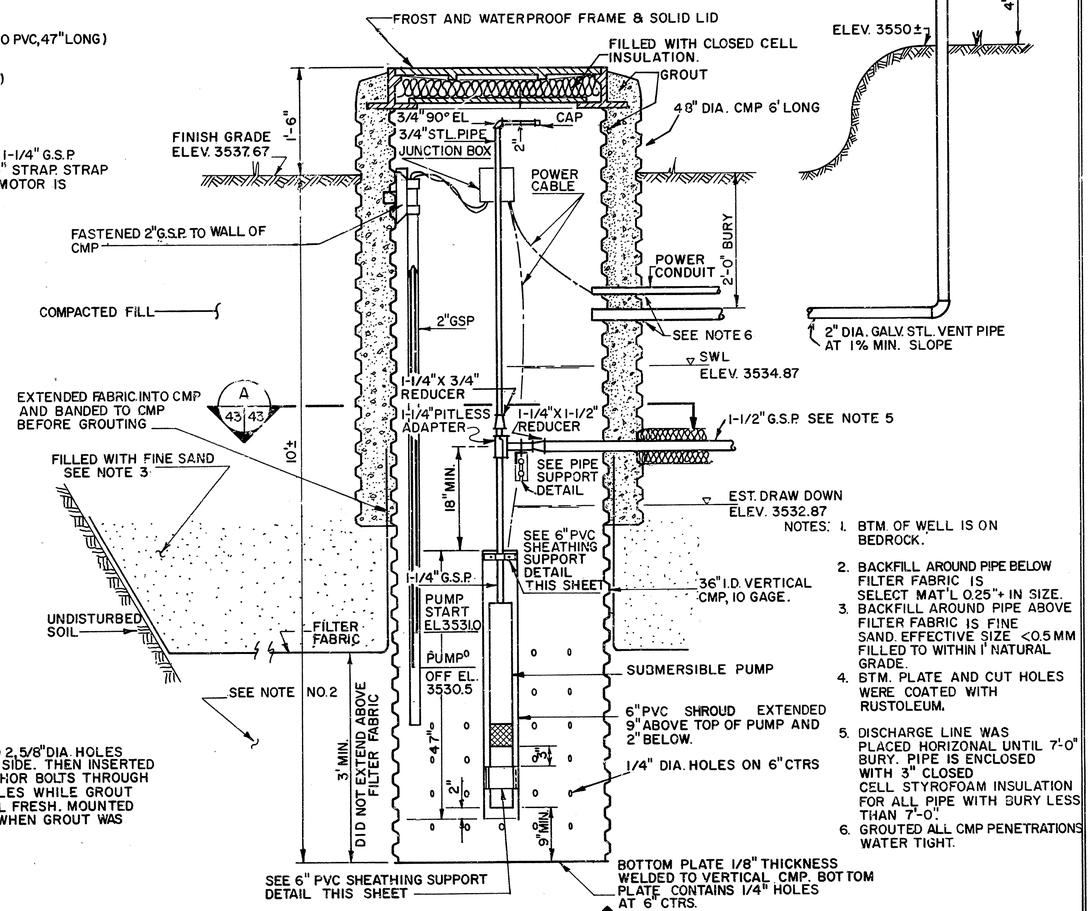

NEW INFILTRATION GALLERY STAND PIPE D 43 43

1 0 1 2
SCALE IN FEET

NOTES:
1. BTM. OF WELL IS ON BEDROCK.
2. BACKFILL AROUND PIPE BELOW FILTER FABRIC IS SELECT MAT'L 0.25"+ IN SIZE.
3. BACKFILL AROUND PIPE ABOVE FILTER FABRIC IS FINE SAND. EFFECTIVE SIZE <0.5 MM FILLED TO WITHIN 1' NATURAL GRADE.
4. BTM. PLATE AND CUT HOLES WERE COATED WITH RUSTOLEUM.
5. DISCHARGE LINE WAS PLACED HORIZONAL UNTIL 7'-0" BURY. PIPE IS ENCLOSED WITH 3" CLOSED CELL STYROFOAM INSULATION FOR ALL PIPE WITH BURY LESS THAN 7'-0".
6. GROUTED ALL CMP PENETRATIONS WATER TIGHT.

NOTE:
PUMP IS 230 V., 1Φ, 1HP, JACUZZI MODEL IS4B-18-S2

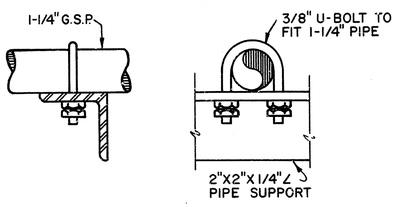

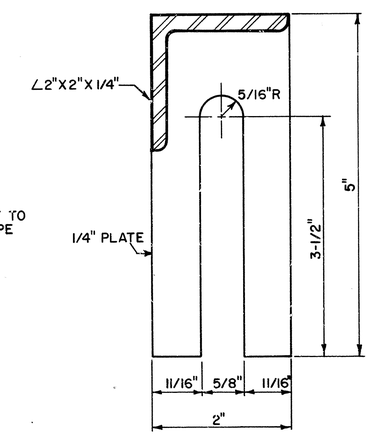

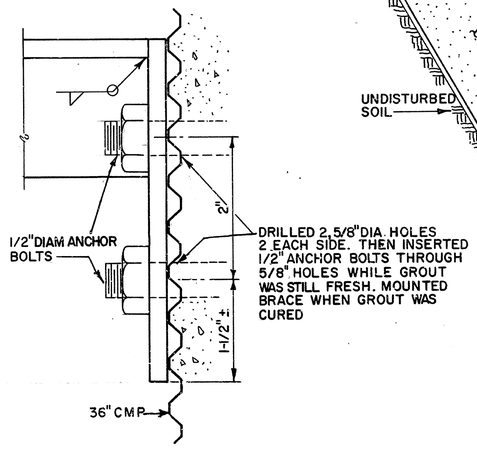

BRACE SECTION B 43 43

1 0 1 2 3
SCALE IN INCHES

PIPE SUPPORT SECTION C 43 43

1 0 1 2
SCALE IN INCHES

NOTE:
SEE SHEET 40 FOR DETAILS OF VALVE BOX LOCATED AT INTERCONNECTION OF OLD AND NEW SYSTEMS APPROX. 15' FROM NEW INFILTRATION GALLERY.

POLEBRIDGE RANGER STATION
INFILTRATION GALLERY

PREPARED	DRAWING NO.
QUAIL DESIGNED	117 / 41,048 B
RJA DRAWN	PCIP PKG. 257 / SHEET
MRA CHECKED	43
5/80 DATE	OF 52

☆ GPO: 1977 777-369

1989 GLAC_117_41073_B POLEBRIDGE DEVELOPMENT AS-BUILTS

P.2 - DEMO AFTER 1988 FIRE

P.3 DORMITORY NEVER CONSTRUCTED

P.13-17 NOT CONSTRUCTED

P.22 GENERATOR BUILDING HAD NEW FOUNDATION/WALL PLACED IN 1996 GLAC_117_60274_A UST REMOVAL AND GENERATOR BUILDING MODIFICATION PLANS - FUEL TANK REMOVED AND RELOCATED

P. 27 - ALSO SEE SHEET 55 FOR AS-BUILT, AND SHEET 34 FOR PROPANE - NOTE THAT PROPANE LINES WERE REPLACED IN 2007!

P.27 - WATER TANK REPLACED AND RELOCATED IN 2001

P.28 ABSORPTION BED AND LIFT STATION DETAILS

P.29 - SEWER PROFILE - ENTRANCE STATION

P.30 - SEPTIC TANKS, MANHOLE DETAILS

P.31 - CURRENT WATER TREATMENT SYSTEM

P.32 - WATER DETAILS INCLUDING TRENCH

P.33 HYDRANT DETAILS

P.34 - PROPANE DETAILS - A THIRD TANK WAS ADDED - ALL PROPANE LINES REPLACED IN 2007!

P.35 - ONLY SEWER LINES FROM FIRE CACHE FROM FLOOR DRAINS - SEE DETAIL K SHEET 40; THERE IS A SPIGOT ON THE SIDE OF THE BUILDING

P.37-38 - NOT CONSTRUCTED

P.39 - DIESEL TANK REMOVED IN 1996 PLANS

P.40 - FUEL TANKS REMOVED IN 1996 PLANS; SAND AND OIL TRAP DETAIL CORRECT

P.42 - PROPANE LINES, METERS REPLACED IN 2007

P.43 – ELECTRICAL SITE PLAN; ACCURATE TO BEST KNOWLEDGE

P.46-47 - NOT CONSTRUCTED

P.55 - SEWER LINE PLAN AND PROFILE

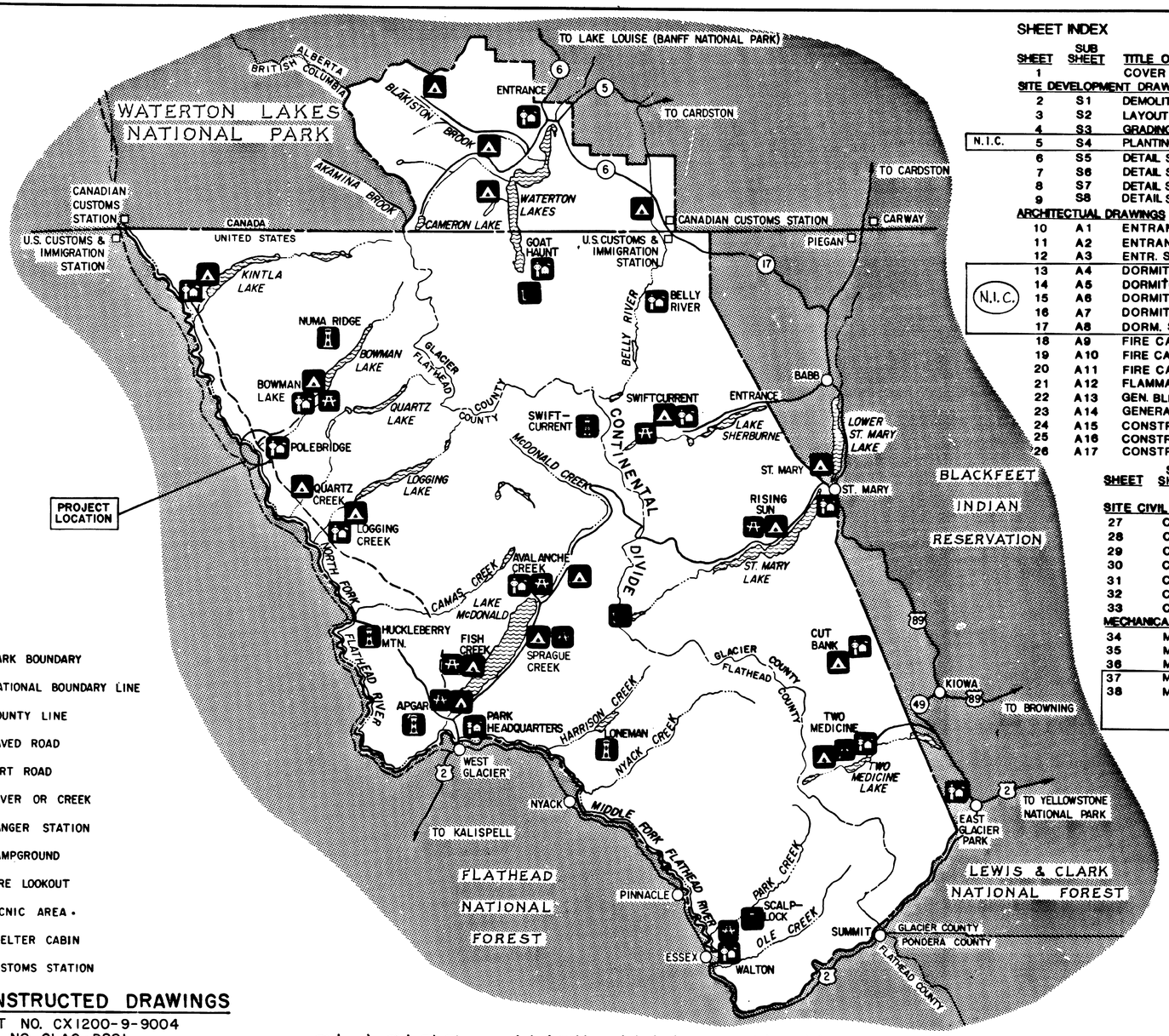

SHEET INDEX

	SHEET	SUB SHEET	TITLE OF SHEET
	1		COVER SHEET
	SITE DEVELOPMENT DRAWINGS		
	2	S1	DEMOLITION PLAN
	3	S2	LAYOUT PLAN
	4	S3	GRADING PLAN
N.I.C.	5	S4	PLANTING PLAN
	6	S5	DETAIL SHEET
	7	S6	DETAIL SHEET
	8	S7	DETAIL SHEET
	9	S8	DETAIL SHEET
	ARCHITECTUAL DRAWINGS		
	10	A1	ENTRANCE STA. PLAN/ELEVATIONS
	11	A2	ENTRANCE STATION SECTIONS
	12	A3	ENTR. STA. FRAME/FOUNDATION/DETAILS
	13	A4	DORMITORY FLOOR PLAN
N.I.C.	14	A5	DORMITORY ELEVATIONS
	15	A6	DORMITORY WALL SECTIONS
	16	A7	DORMITORY WALL/STAIR SECTIONS
	17	A8	DORM. SECTIONS/FRAME/FOUNDATIONS
	18	A9	FIRE CACHE PLAN/ELEVATIONS/DETAILS
	19	A10	FIRE CACHE SECTIONS
	20	A11	FIRE CACHE ROOF/FOUNDATION
	21	A12	FLAMMABLE STORAGE PLANS/DETAILS
	22	A13	GEN. BLDG. PLAN/ELEV./FRAME/FOUND.
	23	A14	GENERATOR BLDG. WALL SECTIONS
	24	A15	CONSTRUCTION DETAILS
	25	A16	CONSTRUCTION DETAILS
	26	A17	CONSTRUCTION DETAILS
	SITE CIVIL DRAWINGS		
	27	C1	WATER & SEWER PLAN
	28	C2	SEWER PROFILES & DETAILS
	29	C3	SEWER PROFILES & DETAILS
	30	C4	SEWER DETAILS
	31	C5	WATER TREATMENT & DETAILS
	32	C6	WATER DETAILS
	33	C7	WATER DETAILS
	MECHANICAL DRAWINGS		
	34	M1	MECHANICAL SITE PLAN
	35	M2	ENTRANCE STATION MECH. PLAN
	36	M3	FIRE CACHE BUILDING MECH. PLAN
	37	M4	DORMITORY BASEMENT MECH. PLAN
	38	M5	DORMITORY MECHANICAL PLAN
	39	M6	FLAMMABLE STORAGE & GENERATOR BUILDING MECHANICAL PLAN
	40	M7	DETAILS & SCHEMATICS
	41	M8	DETAILS & SCHEMATICS
	42	M9	DETAILS
	ELECTRICAL DRAWINGS		
	43	E1	ELECTRICAL SITE PLAN
	44	E2	ENTRANCE STATION ELECTRICAL PLAN
	45	E3	FIRE CACHE ELECTRICAL PLAN
N.I.C.	46	E4	DORMITORY BASEMENT ELECTRICAL PLAN
	47	E5	DORMITORY MAIN FLR. ELECTRICAL PLAN
	48	E6	GENERATOR & FLAMABLE STORAGE ELECTRICAL PLAN
	49	E7	ONE-LINE DIAGRAMS & SCHEDULES
	50	E8	ELECTRICAL LEGENDS
	51	A-18	MAINTENANCE BUILDING · ELEVATIONS · PLANS
	52	A-19	MAINTENANCE BUILDING · WALL SECTIONS · ROOF FRAMING · FOUNDATION PLAN · SCHEDULES
	53	A-20	MAINTENANCE BUILDING · DETAILS
	54	ME-1	MAINTENANCE BUILDING · MECHANICAL AND ELECTRICAL PLANS
	55	C-8	WATER AND SEWER PLAN

N.I.C.

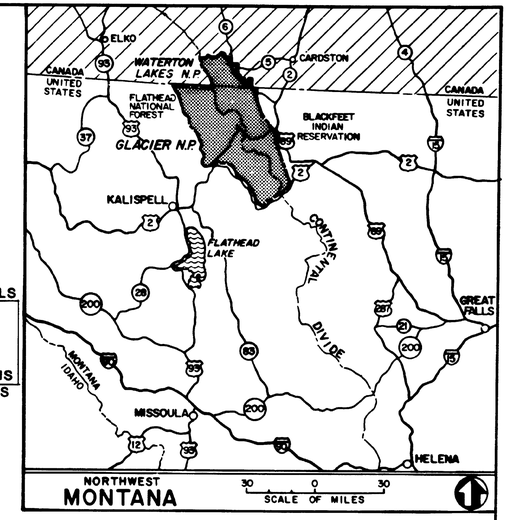

LEGEND

- PARK BOUNDARY
- NATIONAL BOUNDARY LINE
- COUNTY LINE
- PAVED ROAD
- DIRT ROAD
- RIVER OR CREEK
- RANGER STATION
- CAMPGROUND
- FIRE LOOKOUT
- PICNIC AREA
- SHELTER CABIN
- CUSTOMS STATION

(B) **AS CONSTRUCTED DRAWINGS**

CONTRACT NO. CX1200-9-9004
PROJECT NO. GLAC-DS91
CONTRACTOR: SWANK ENTERPRISES
P.O. BOX 459
KALISPELL, MT., 59901
PROJECT SUPERVISOR:
JACK DOLLAR

POLEBRIDGE DEVELOPMENT

POLEBRIDGE
GLACIER NATIONAL PARK

THE LANDPLAN DESIGN GROUP – LANDSCAPE ARCHITECT
CHAMBERLIN ARCHITECTS – ARCHITECT
MARTIN & MARTIN – CIVIL ENGINEERS
McFALL-KONKEL-KIMBELL – MECHANICAL/ELECTRICAL ENGINEERS
CHEN-NORTHERN – GEOTECHNICAL

SCALE OF MILES
4 0 4 8
6 0 6 12
SCALE OF KILOMETERS

GLACIER NATIONAL PARK

REDUCED SIZE REPRODUCTION

Mark	Sheet	REVISION	Date	Initial
1		ADDENDUM #1 (MAINTENANCE BLDG.) SHEETS 1A, 51, 52, 53 AND 54 ADDED.	8/89	-
B	ALL	AS CONSTRUCTED DRAWINGS	12/90	WEA

This drawing has been prepared in compliance with Preliminary/Comprehensive Design Drawing No. 117/41,073
Approved by LORRAINE MINTZMYER
REGIONAL DIRECTOR on 5/25/89
Date
Assistant Manager Date

AS CONSTRUCTED DRAWINGS

UNITED STATES
DEPARTMENT OF THE INTERIOR
NATIONAL PARK SERVICE
DENVER SERVICE CENTER

DESIGNED: L.D.G.
DRAWN: DRAFTING BR.
TECH. REVIEW:
DATE: 7/14/89

TITLE OF DRAWING
POLEBRIDGE DEVELOPMENT
LOCATION WITHIN PARK
POLEBRIDGE
NAME OF PARK
GLACIER NATIONAL PARK
WATERTON-GLACIER INTERNATIONAL PEACE PARK
REGION: ROCKY MOUNTAIN COUNTY: FLATHEAD STATE: MONTANA

DRAWING NO 117 41073B
PKG. NO DS 91
SHEET 1 OF 55

BASIC DATA: 117/20,013, 7/74; COVER REVISED/REDRAWN 2/84

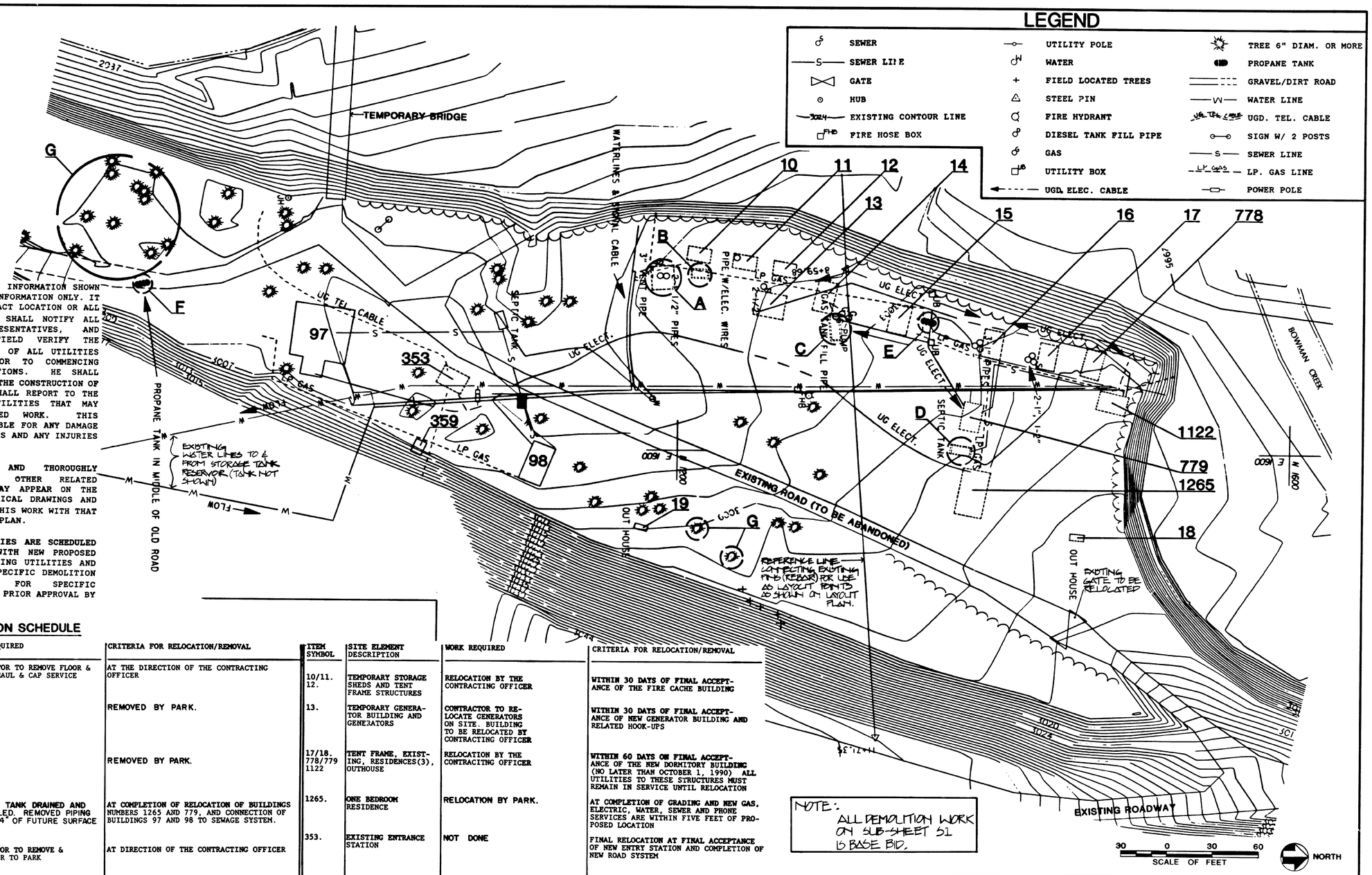

NOTE: ALL DEMOLITION WORK ON SUB-SHEET S1 IS BASE BID.

DEMOLITION NOTES

1. EXISTING OR PROPOSED UTILITY INFORMATION SHOWN IS APPROXIMATE ONLY AND FOR INFORMATION ONLY. IT IS NOT INTENDED TO DEPICT EXACT LOCATION OR ALL UTILITIES. THE CONTRACTOR SHALL NOTIFY ALL UTILITY COMPANIES, REPRESENTATIVES, AND CONTRACTING OFFICER TO FIELD VERIFY THE LOCATIONS, INCLUDING DEPTHS, OF ALL UTILITIES EXISTING AND PROPOSED PRIOR TO COMMENCING RELATED CONSTRUCTION OPERATIONS. HE SHALL MAINTAIN THE LOCATION DURING THE CONSTRUCTION OF THE WORK. THE CONTRACTOR SHALL REPORT TO THE CONTRACTING OFFICER ANY UTILITIES THAT MAY CONFLICT WITH THE PROPOSED WORK. THIS CONTRACTOR SHALL BE RESPONSIBLE FOR ANY DAMAGE TO UTILITY LINES OR STRUCTURES AND ANY INJURIES THEREFROM.

2. CONTRACTOR WILL REVIEW AND THOROUGHLY FAMILIARIZE HIMSELF WITH OTHER RELATED DEMOLITION ITEMS AS THEY MAY APPEAR ON THE CIVIL, MECHANICAL AND ELECTRICAL DRAWINGS AND COORDINATE THE EXECUTION OF THIS WORK WITH THAT CONTAINED IN THIS DEMOLITION PLAN.

3. CERTAIN EXISTING SITE UTILITIES ARE SCHEDULED FOR RE-USE IN CONJUNCTION WITH NEW PROPOSED SERVICES. PROTECT ALL EXISTING UTILITIES AND SERVICE LINES EXCEPT WHERE SPECIFIC DEMOLITION INSTRUCTIONS ARE GIVEN FOR SPECIFIC REMOVAL/ALTERATION TIMES WITH PRIOR APPROVAL BY THE CONTRACTING OFFICER.

DEMOLITION AND RELOCATION SCHEDULE

ITEM SYMBOL	SITE ELEMENT DESCRIPTION	WORK REQUIRED	CRITERIA FOR RELOCATION/REMOVAL
A.	FORMER CHLORINATION BUILDING CONCRETE FLOOR AND UTILITY STUBS	CONTRACTOR TO REMOVE FLOOR & SLAB & HAUL & CAP SERVICE LINES	AT THE DIRECTION OF THE CONTRACTING OFFICER
B.	DIESEL FUEL STORAGE TANK AND PIPING		REMOVED BY PARK.
C.	GASOLINE STORAGE TANK AND PIPING		REMOVED BY PARK.
D.	SEPTIC TANK & SEWER LINE	EXISTING TANK DRAINED AND BACKFILLED. REMOVED PIPING WITHIN 24" OF FUTURE SURFACE GRADES.	AT COMPLETION OF RELOCATION OF BUILDINGS NUMBERS 1265 AND 779, AND CONNECTION OF BUILDINGS 97 AND 98 TO SEWAGE SYSTEM.
E./F.	L.P. SURFACE GAS STORAGE TANKS AND GROUND SUPPORTS	CONTRACTOR TO REMOVE & TURN OVER TO PARK	AT DIRECTION OF THE CONTRACTING OFFICER
G.	EXISTING TREES AS TAGGED ON SITE	CONTRACTOR TO REMOVE TO 6" BELOW SURROUNDING GRADE. CUT IN 18" LENGTHS, STACK IN APPROVED LOCATION. REMOVE ALL STUMPS INSIDE A FIVE FOOT SETBACK FROM ALL NEW BUILDING FOUNDATIONS	AT DIRECTION OF THE CONTRACTING OFFICER

ITEM SYMBOL	SITE ELEMENT DESCRIPTION	WORK REQUIRED	CRITERIA FOR RELOCATION/REMOVAL
10/11. 12.	TEMPORARY STORAGE SHEDS AND TENT FRAME STRUCTURES	RELOCATION BY THE CONTRACTING OFFICER	WITHIN 30 DAYS OF FINAL ACCEPTANCE OF THE FIRE CACHE BUILDING
13.	TEMPORARY GENERATOR BUILDING AND GENERATORS	CONTRACTOR TO RELOCATE GENERATORS ON SITE. BUILDING TO BE RELOCATED BY CONTRACTING OFFICER	WITHIN 30 DAYS OF FINAL ACCEPTANCE OF NEW GENERATOR BUILDING AND RELATED HOOK-UPS
17/18. 778/779 1122	TENT FRAME, EXISTING, RESIDENCES(3), OUTHOUSE	RELOCATION BY THE CONTRACITNG OFFICER	WITHIN 60 DAYS ON FINAL ACCEPTANCE OF THE NEW DORMITORY BUILDING (NO LATER THAN OCTOBER 1, 1990) ALL UTILITIES TO THESE STRUCTURES MUST REMAIN IN SERVICE UNTIL RELOCATION
1265.	ONE BEDROOM RESIDENCE	RELOCATION BY PARK.	AT COMPLETION OF GRADING AND NEW GAS, ELECTRIC, WATER, SEWER AND PHONE SERVICES ARE WITHIN FIVE FEET OF PROPOSED LOCATION
353.	EXISTING ENTRANCE STATION	NOT DONE	FINAL RELOCATION AT FINAL ACCEPTANCE OF NEW ENTRY STATION AND COMPLETION OF NEW ROAD SYSTEM
19. 97. 98. 359.	OUTHOUSE EXISTING RANGER RESIDENCE EXISTING RESIDENCE EXISTING SHED	PROTECT EXISTING STRUCTURES TO REMAIN	NOT APPLICABLE

DESIGNED: L.D.G.	SUB SHEET NO.	TITLE OF SHEET	DRAWING NO. 117 41073B
DRAWN:	S1	DEMOLITION PLAN	PKG. NO. DS 91
TECH. REVIEW:			SHEET 2 OF 55
DATE: 7/14/89			

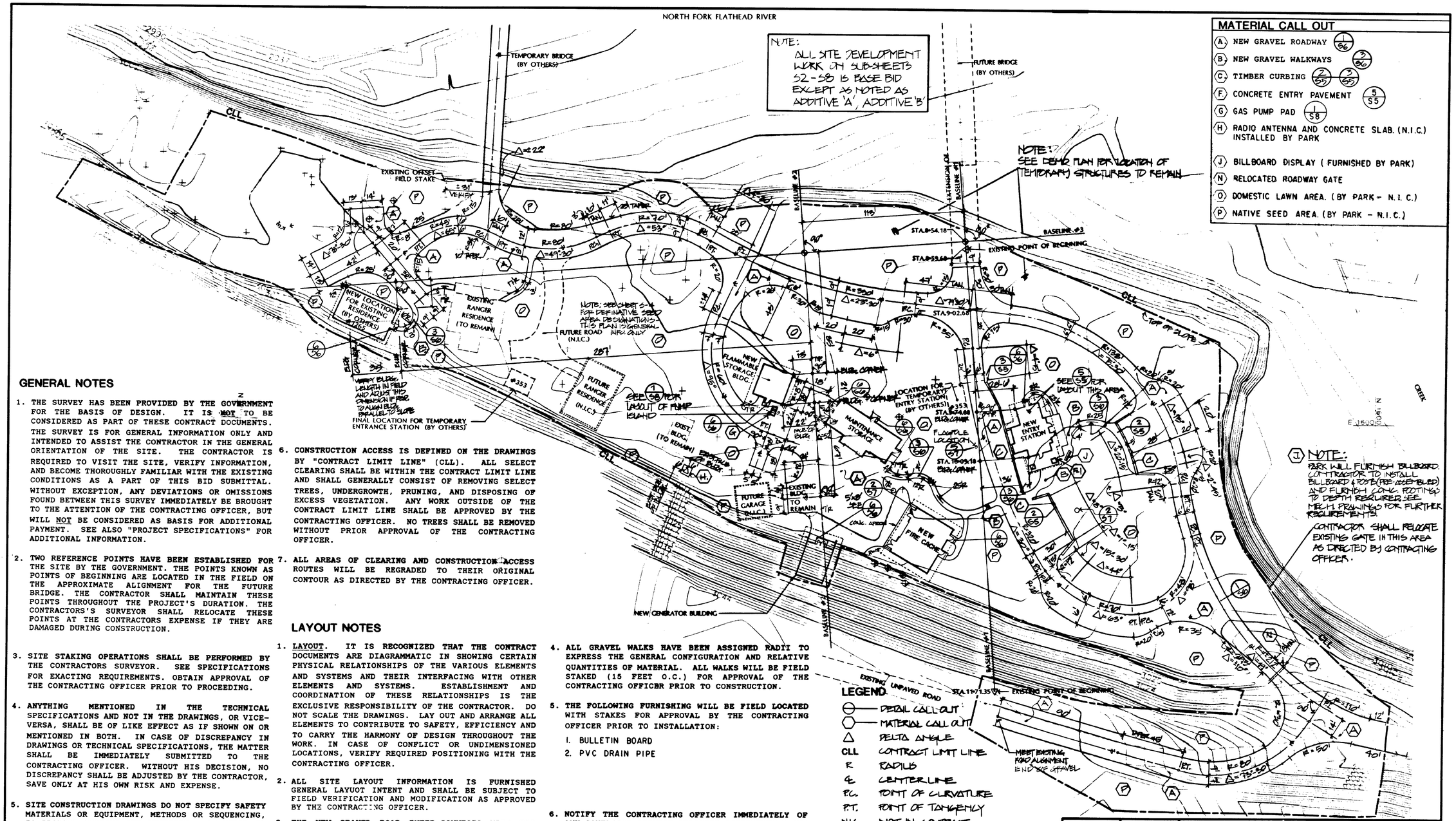

GENERAL NOTES

1. THE SURVEY HAS BEEN PROVIDED BY THE GOVERNMENT FOR THE BASIS OF DESIGN. IT IS NOT TO BE CONSIDERED AS PART OF THESE CONTRACT DOCUMENTS. THE SURVEY IS FOR GENERAL INFORMATION ONLY AND INTENDED TO ASSIST THE CONTRACTOR IN THE GENERAL ORIENTATION OF THE SITE. THE CONTRACTOR IS REQUIRED TO VISIT THE SITE, VERIFY INFORMATION, AND BECOME THOROUGHLY FAMILIAR WITH THE EXISTING CONDITIONS AS A PART OF THIS BID SUBMITTAL. WITHOUT EXCEPTION, ANY DEVIATIONS OR OMISSIONS FOUND BETWEEN THIS SURVEY IMMEDIATELY BE BROUGHT TO THE ATTENTION OF THE CONTRACTING OFFICER, BUT WILL NOT BE CONSIDERED AS BASIS FOR ADDITIONAL PAYMENT. SEE ALSO "PROJECT SPECIFICATIONS" FOR ADDITIONAL INFORMATION.

2. TWO REFERENCE POINTS HAVE BEEN ESTABLISHED FOR THE SITE BY THE GOVERNMENT. THE POINTS KNOWN AS POINTS OF BEGINNING ARE LOCATED IN THE FIELD ON THE APPROXIMATE ALIGNMENT FOR THE FUTURE BRIDGE. THE CONTRACTOR SHALL MAINTAIN THESE POINTS THROUGHOUT THE PROJECT'S DURATION. THE CONTRACTORS'S SURVEYOR SHALL RELOCATE THESE POINTS AT THE CONTRACTORS EXPENSE IF THEY ARE DAMAGED DURING CONSTRUCTION.

3. SITE STAKING OPERATIONS SHALL BE PERFORMED BY THE CONTRACTORS SURVEYOR. SEE SPECIFICATIONS FOR EXACTING REQUIREMENTS. OBTAIN APPROVAL OF THE CONTRACTING OFFICER PRIOR TO PROCEEDING.

4. ANYTHING MENTIONED IN THE TECHNICAL SPECIFICATIONS AND NOT IN THE DRAWINGS, OR VICE-VERSA, SHALL BE OF LIKE EFFECT AS IF SHOWN ON OR MENTIONED IN BOTH. IN CASE OF DISCREPANCY IN DRAWINGS OR TECHNICAL SPECIFICATIONS, THE MATTER SHALL BE IMMEDIATELY SUBMITTED TO THE CONTRACTING OFFICER. WITHOUT HIS DECISION, NO DISCREPANCY SHALL BE ADJUSTED BY THE CONTRACTOR, SAVE ONLY AT HIS OWN RISK AND EXPENSE.

5. SITE CONSTRUCTION DRAWINGS DO NOT SPECIFY SAFETY MATERIALS OR EQUIPMENT, METHODS OR SEQUENCING, TO PROTECT PERSONS AND PROPERTY. IT SHALL BE THE CONTRACTOR'S SOLE RESPONSIBILITY TO DIRECT AND IMPLEMENT SAFETY OPERATIONS AND PROCEDURES TO PROTECT THE OWNER, OTHER CONTRACTORS, THE PUBLIC, AND OTHERS.

6. CONSTRUCTION ACCESS IS DEFINED ON THE DRAWINGS BY "CONTRACT LIMIT LINE" (CLL). ALL SELECT CLEARING SHALL BE WITHIN THE CONTRACT LIMIT LINE AND SHALL GENERALLY CONSIST OF REMOVING SELECT TREES, UNDERGROWTH, PRUNING, AND DISPOSING OF EXCESS VEGETATION. ANY WORK OUTSIDE OF THE CONTRACT LIMIT LINE SHALL BE APPROVED BY THE CONTRACTING OFFICER. NO TREES SHALL BE REMOVED WITHOUT PRIOR APPROVAL OF THE CONTRACTING OFFICER.

7. ALL AREAS OF CLEARING AND CONSTRUCTION ACCESS ROUTES WILL BE REGRADED TO THEIR ORIGINAL CONTOUR AS DIRECTED BY THE CONTRACTING OFFICER.

LAYOUT NOTES

1. LAYOUT. IT IS RECOGNIZED THAT THE CONTRACT DOCUMENTS ARE DIAGRAMMATIC IN SHOWING CERTAIN PHYSICAL RELATIONSHIPS OF THE VARIOUS ELEMENTS AND SYSTEMS AND THEIR INTERFACING WITH OTHER ELEMENTS AND SYSTEMS. ESTABLISHMENT AND COORDINATION OF THESE RELATIONSHIPS IS THE EXCLUSIVE RESPONSIBILITY OF THE CONTRACTOR. DO NOT SCALE THE DRAWINGS. LAY OUT AND ARRANGE ALL ELEMENTS TO CONTRIBUTE TO SAFETY, EFFICIENCY AND TO CARRY THE HARMONY OF DESIGN THROUGHOUT THE WORK. IN CASE OF CONFLICT OR UNDIMENSIONED LOCATIONS, VERIFY REQUIRED POSITIONING WITH THE CONTRACTING OFFICER.

2. ALL SITE LAYOUT INFORMATION IS FURNISHED GENERAL LAYUOT INTENT AND SHALL BE SUBJECT TO FIELD VERIFICATION AND MODIFICATION AS APPROVED BY THE CONTRACTING OFFICER.

3. THE NEW GRAVEL ROAD INTER-CONNECTS WITH THE EXISTING TEMPORARY BRIDGE AND THE EXISTING PARK ROAD ON THE UPPER BENCH. VERIFY THE LOCATIONS OF EXISTING CENTER LINES AT THESE CONNECTION POINTS. NOTIFY THE CONTRACTING OFFICER OF ANY DISCREPANCIES BETWEEN PROPOSED AND EXISTING ROAD ALIGNMENT PRIOR TO FINAL LAYOUT.

4. ALL GRAVEL WALKS HAVE BEEN ASSIGNED RADII TO EXPRESS THE GENERAL CONFIGURATION AND RELATIVE QUANTITIES OF MATERIAL. ALL WALKS WILL BE FIELD STAKED (15 FEET O.C.) FOR APPROVAL OF THE CONTRACTING OFFICER PRIOR TO CONSTRUCTION.

5. THE FOLLOWING FURNISHING WILL BE FIELD LOCATED WITH STAKES FOR APPROVAL BY THE CONTRACTING OFFICER PRIOR TO INSTALLATION:

   1. BULLETIN BOARD
   2. PVC DRAIN PIPE

6. NOTIFY THE CONTRACTING OFFICER IMMEDIATELY OF ANY CONFLICTS BETWEEN PROPOSED IMPROVEMENTS AND EXISTING TREES PRIOR TO NEW CONSTRUCTION.

DESIGNED: L.D.G.	SUB SHEET NO.	TITLE OF SHEET	DRAWING NO. 117 41073 B
DRAWN: J.P	S2	LAYOUT PLAN	PKG. NO. DS 91
TECH. REVIEW:			SHEET 3 OF 55
DATE: 7/14/89			

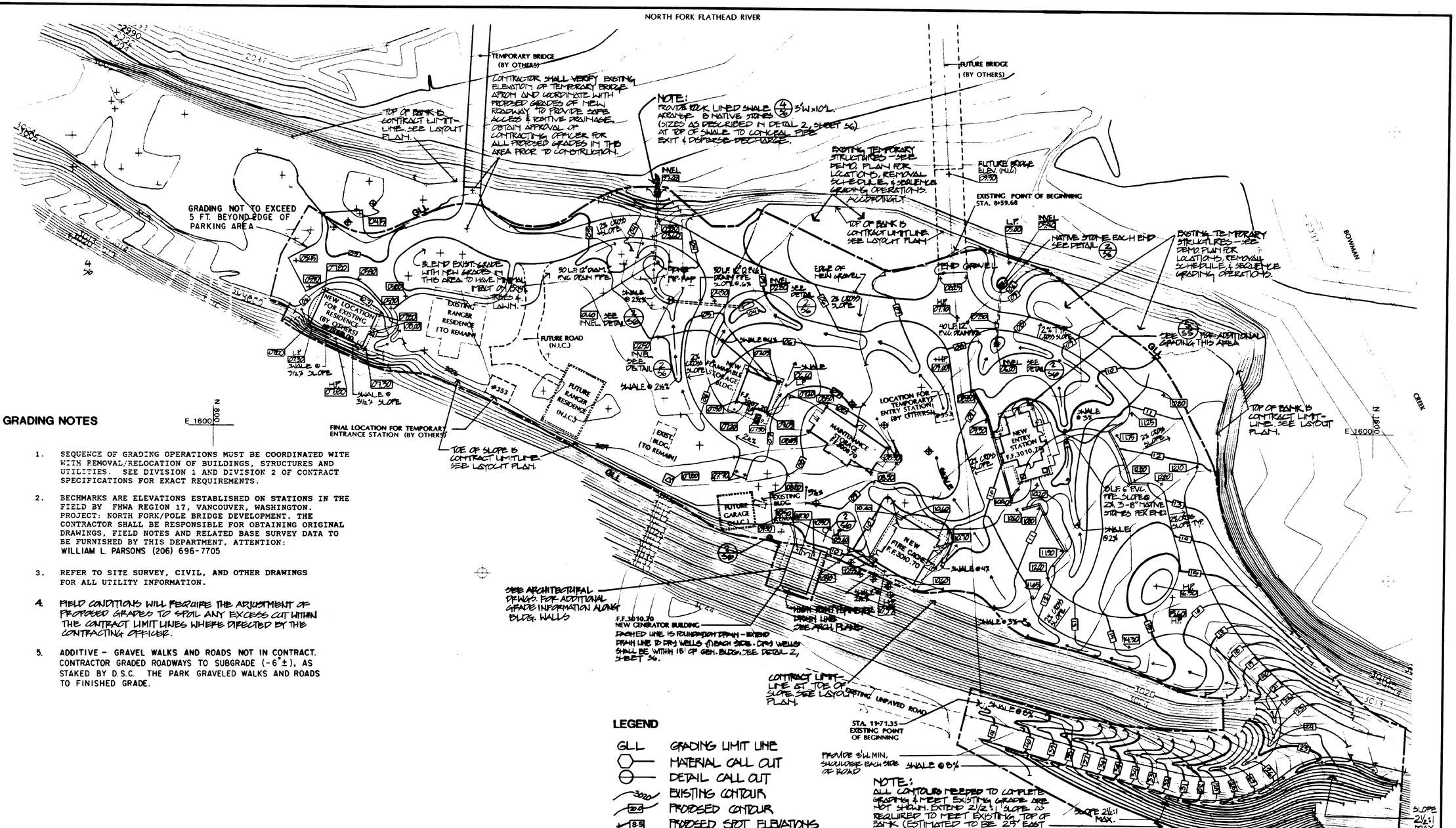

GRADING NOTES

1. SEQUENCE OF GRADING OPERATIONS MUST BE COORDINATED WITH WITH REMOVAL/RELOCATION OF BUILDINGS, STRUCTURES AND UTILITIES. SEE DIVISION 1 AND DIVISION 2 OF CONTRACT SPECIFICATIONS FOR EXACT REQUIREMENTS.

2. BECHMARKS ARE ELEVATIONS ESTABLISHED ON STATIONS IN THE FIELD BY FHWA REGION 17, VANCOUVER, WASHINGTON. PROJECT: NORTH FORK/POLE BRIDGE DEVELOPMENT. THE CONTRACTOR SHALL BE RESPONSIBLE FOR OBTAINING ORIGINAL DRAWINGS, FIELD NOTES AND RELATED BASE SURVEY DATA TO BE FURNISHED BY THIS DEPARTMENT, ATTENTION: WILLIAM L. PARSONS (206) 696-7705

3. REFER TO SITE SURVEY, CIVIL, AND OTHER DRAWINGS FOR ALL UTILITY INFORMATION.

4. FIELD CONDITIONS WILL REQUIRE THE ADJUSTMENT OF PROPOSED GRADES TO SPOIL ANY EXCESS CUT WITHIN THE CONTRACT LIMIT LINES WHERE DIRECTED BY THE CONTRACTING OFFICER.

5. ADDITIVE - GRAVEL WALKS AND ROADS NOT IN CONTRACT. CONTRACTOR GRADED ROADWAYS TO SUBGRADE (-6"±), AS STAKED BY D.S.C. THE PARK GRAVELED WALKS AND ROADS TO FINISHED GRADE.

LEGEND

GLL	GRADING LIMIT LINE
⬡	MATERIAL CALL OUT
⊖	DETAIL CALL OUT
3020	EXISTING CONTOUR
20.4	PROPOSED CONTOUR
+ 8.5	PROPOSED SPOT ELEVATIONS
⊕	FIELD LOCATED EXISTING TREES
+	EXISTING TREES FROM SURVEY

30 0 30 60
SCALE OF FEET

NORTH

DESIGNED: L.D.G.	SUB SHEET NO.	TITLE OF SHEET	DRAWING NO. 117 41073 B
DRAWN: J. P	S3	GRADING PLAN	PKG. NO. DS 91
TECH. REVIEW:			SHEET 4 OF 55
DATE: 7/14/89			

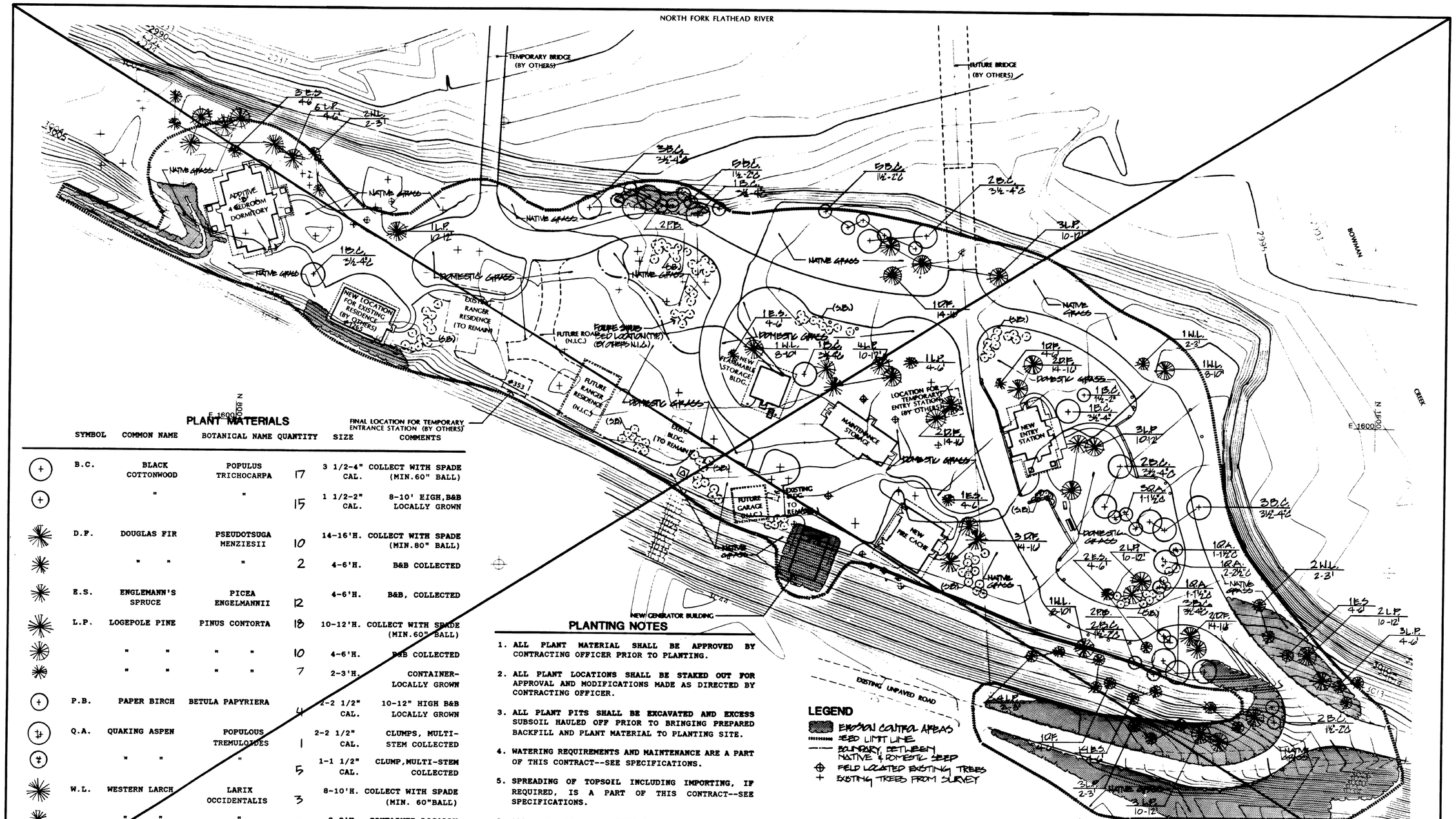

PLANT MATERIALS

SYMBOL	COMMON NAME	BOTANICAL NAME	QUANTITY	SIZE	COMMENTS
B.C.	BLACK COTTONWOOD	POPULUS TRICHOCARPA	17	3 1/2-4" CAL.	COLLECT WITH SPADE (MIN.60" BALL)
	"	"	15	1 1/2-2" CAL.	8-10' HIGH, B&B LOCALLY GROWN
D.F.	DOUGLAS FIR	PSEUDOTSUGA MENZIESII	10	14-16'H.	COLLECT WITH SPADE (MIN.80" BALL)
	" "	"	2	4-6'H.	B&B COLLECTED
E.S.	ENGLEMANN'S SPRUCE	PICEA ENGELMANNII	12	4-6'H.	B&B, COLLECTED
L.P.	LOGEPOLE PINE	PINUS CONTORTA	18	10-12'H.	COLLECT WITH SPADE (MIN.60" BALL)
	" " " "		10	4-6'H.	B&B COLLECTED
	" " " "		7	2-3'H.	CONTAINER-LOCALLY GROWN
P.B.	PAPER BIRCH	BETULA PAPYRIERA	4	2-2 1/2" CAL.	10-12" HIGH B&B LOCALLY GROWN
Q.A.	QUAKING ASPEN	POPULOUS TREMULOIDES	1	2-2 1/2" CAL.	CLUMPS, MULTI-STEM COLLECTED
	" "	"	5	1-1 1/2" CAL.	CLUMP, MULTI-STEM COLLECTED
W.L.	WESTERN LARCH	LARIX OCCIDENTALIS	3	8-10'H.	COLLECT WITH SPADE (MIN. 60"BALL)
	" "	"	5	2-3'H.	CONTAINER, LOCALLY GROWN

(S.B.) FUTURE SHRUB BED LOCATION BY OTHERS (NOT IN CONTRACT)

PLANTING NOTES

1. ALL PLANT MATERIAL SHALL BE APPROVED BY CONTRACTING OFFICER PRIOR TO PLANTING.
2. ALL PLANT LOCATIONS SHALL BE STAKED OUT FOR APPROVAL AND MODIFICATIONS MADE AS DIRECTED BY CONTRACTING OFFICER.
3. ALL PLANT PITS SHALL BE EXCAVATED AND EXCESS SUBSOIL HAULED OFF PRIOR TO BRINGING PREPARED BACKFILL AND PLANT MATERIAL TO PLANTING SITE.
4. WATERING REQUIREMENTS AND MAINTENANCE ARE A PART OF THIS CONTRACT--SEE SPECIFICATIONS.
5. SPREADING OF TOPSOIL INCLUDING IMPORTING, IF REQUIRED, IS A PART OF THIS CONTRACT--SEE SPECIFICATIONS.
6. ALL LAWN AREAS DISTURBED BY GRADING OPERATIONS SHALL RECEIVE NEW SEED RESTORATION.

DELETED

DESIGNED: L.D.G.	SUB SHEET NO.	TITLE OF SHEET	DRAWING NO. 117 / 41073B
DRAWN: J.P	S4	PLANTING PLAN	PKG. NO. DS 91
TECH. REVIEW:		DELETED	SHEET 5 OF 55
DATE: 7/14/89			

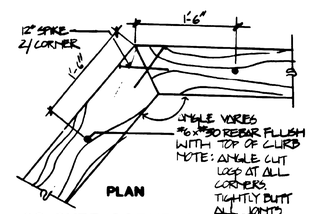

3C. CURB CORNERS
N.T.S.

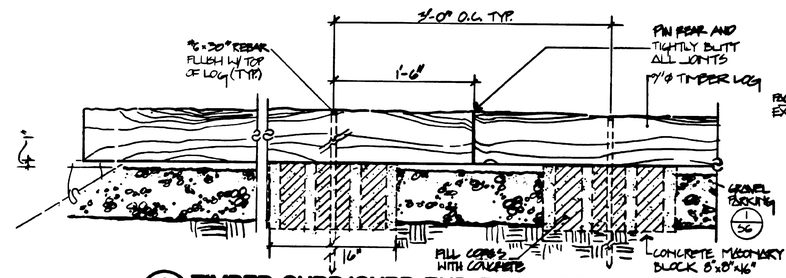

3 TIMBER CURB/CURB END ELEVATION
SCALE D

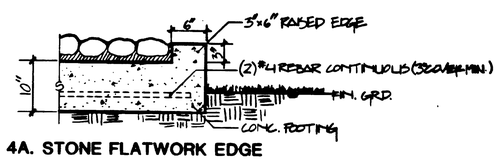

4A. STONE FLATWORK EDGE

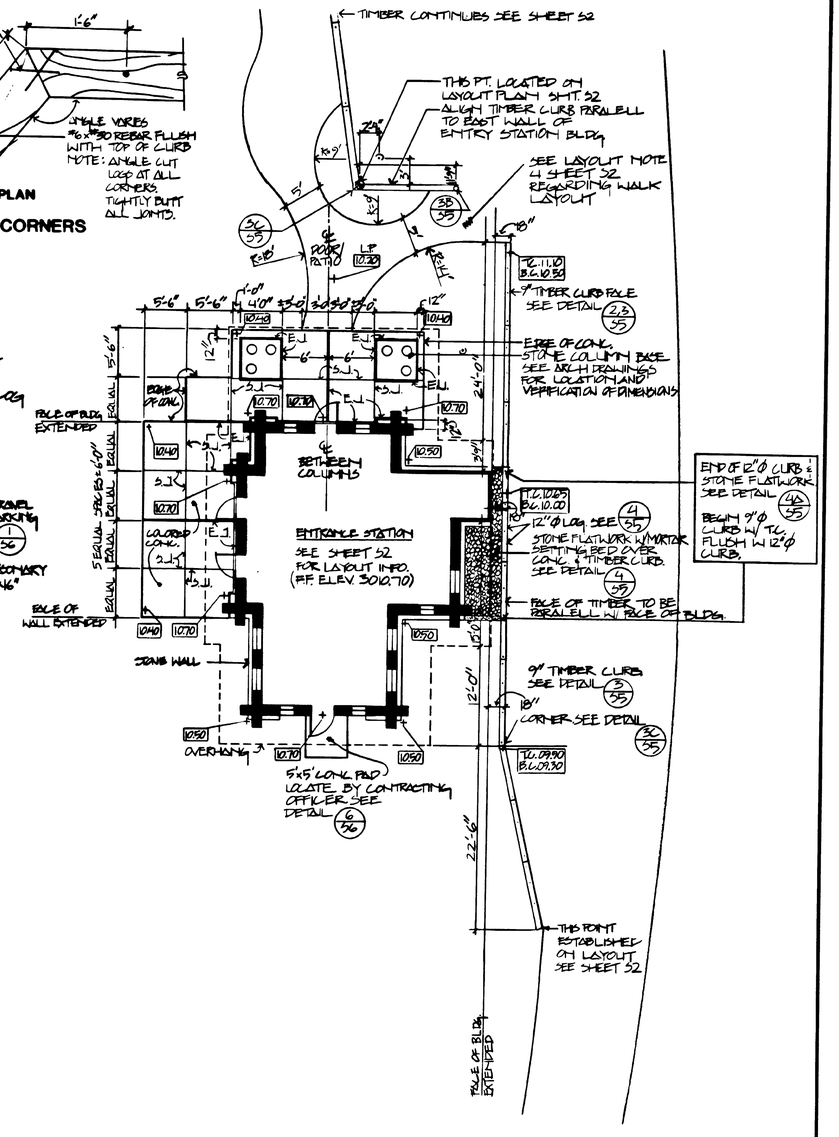

5 ENTRANCE STATION PAVING & CURB LAYOUT
SCALE E

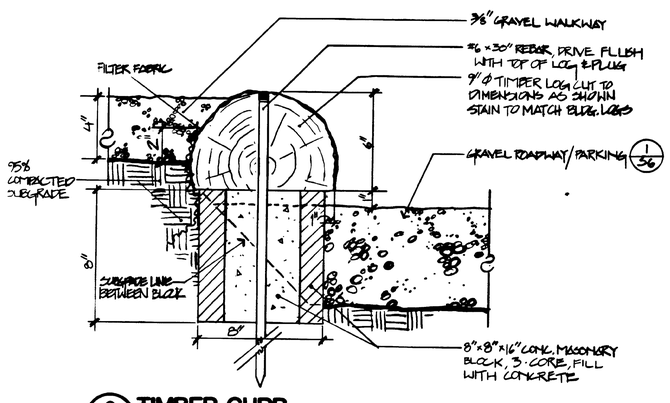

2 TIMBER CURB
SCALE B

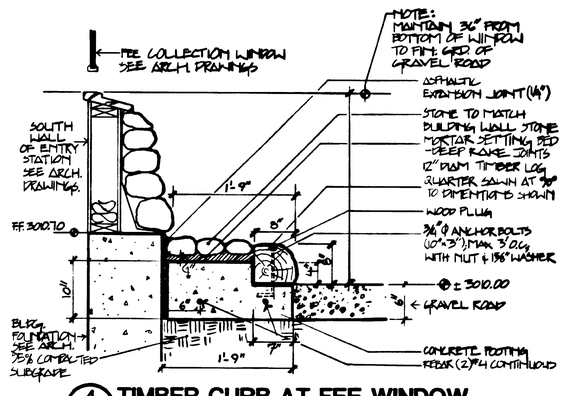

4 TIMBER CURB AT FEE WINDOW
SCALE A

SCALE A 1 0 1 2 SCALE OF FEET
SCALE B 6 3 0 6 SCALE OF FEET
SCALE D 12 6 0 12 SCALE OF FEET
SCALE E 8 0 8 16 SCALE OF FEET

DESIGNED: L.D.G.	SUB SHEET NO.	TITLE OF SHEET	DRAWING NO. 117 41073B
DRAWN: J.L.P.	S5	DETAIL SHEET	PKG. NO.
TECH. REVIEW:			SHEET 6
DATE: 7/14/89			DS 91 OF 55

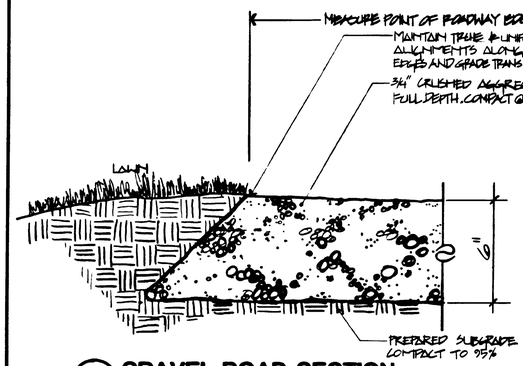

NOTE
NOT IN CONTRACT. DONE BY PARK.

1 GRAVEL ROAD SECTION
SCALE (B)

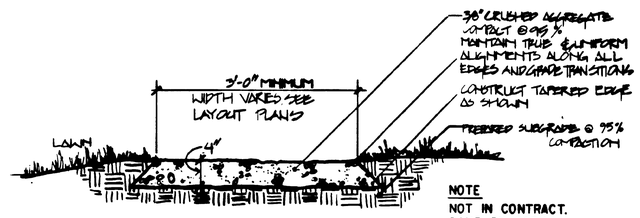

NOTE
NOT IN CONTRACT. DONE BY PARK.

3 GRAVEL WALK SECTION
SCALE (A)

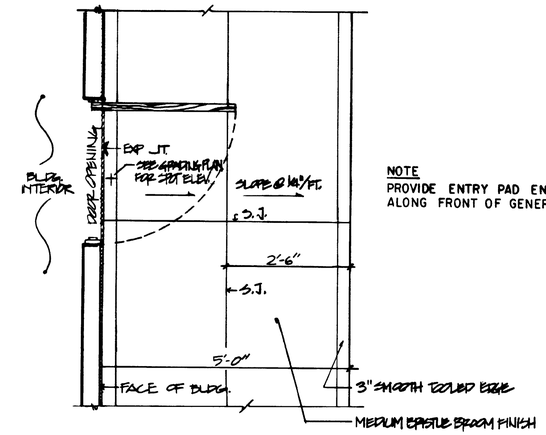

NOTE
PROVIDE ENTRY PAD ENTIRE WIDTH ALONG FRONT OF GENERATOR BUILDING.

6 CONCRETE ENTRY PAVEMENT
SCALE (C)

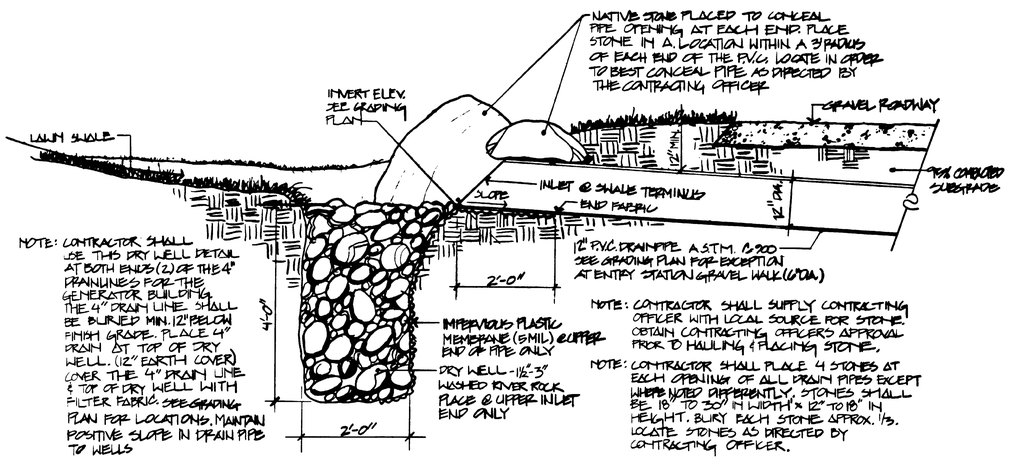

NOTE: CONTRACTOR SHALL USE THIS DRY WELL DETAIL AT BOTH ENDS (2) OF THE 4" DRAIN LINES FOR THE GENERATOR BUILDING. THE 4" DRAIN LINE SHALL BE BURIED MIN. 12" BELOW FINISH GRADE. PLACE 4" DRAIN AT TOP OF DRY WELL. (12" EARTH COVER) COVER THE 4" DRAIN LINE & TOP OF DRY WELL WITH FILTER FABRIC. SEE GRADING PLAN FOR LOCATIONS. MAINTAIN POSITIVE SLOPE IN DRAIN PIPE TO WELLS

NOTE: CONTRACTOR SHALL SUPPLY CONTRACTING OFFICER WITH LOCAL SOURCE FOR STONE. OBTAIN CONTRACTING OFFICER'S APPROVAL PRIOR TO HAULING & PLACING STONE.

NOTE: CONTRACTOR SHALL PLACE 4 STONES AT EACH OPENING OF ALL DRAIN PIPES EXCEPT WHERE NOTED DIFFERENTLY. STONES SHALL BE 18" TO 30" IN WIDTH x 12" TO 18" IN HEIGHT. BURY EACH STONE APPROX. 1/3. LOCATE STONES AS DIRECTED BY CONTRACTING OFFICER.

2 P.V.C. DRAIN PIPE AND DRY WELL
SCALE (C)

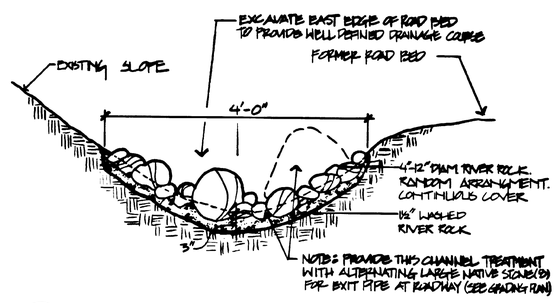

4 STONE RIP-RAP SWALE
SCALE (A)

SCALE (A) 1 0 1 2 SCALE OF FEET

SCALE (B) 6 3 0 6 SCALE OF FEET

SCALE (C) 1 0 1 2 3 SCALE OF FEET

DESIGNED: L.D.G.	SUB SHEET NO.	TITLE OF SHEET	DRAWING NO. 117 41073B
DRAWN: J.L.P.	S6	DETAIL SHEET	PKG. NO. DS 91
TECH. REVIEW:			SHEET 7 OF 55
DATE: 7/14/89			

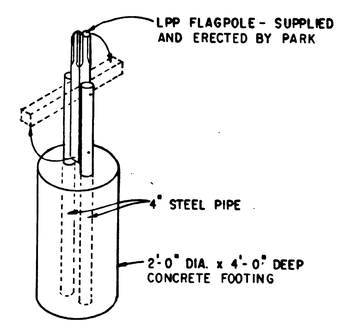

5 **FLAGPOLE FOOTING**
NOT TO SCALE

DESIGNED: L.D.G. DRAWN: J.L.P. TECH. REVIEW: DATE: 7/14/89	SUB SHEET NO. S7	TITLE OF SHEET DETAIL SHEET	DRAWING NO. 117 / 41073B PKG. NO. DS 91 SHEET 8 OF 55

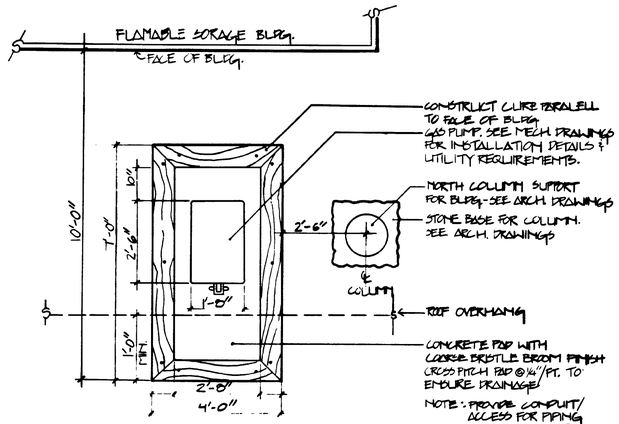

1B. PLAN LAYOUT
N.T.S.

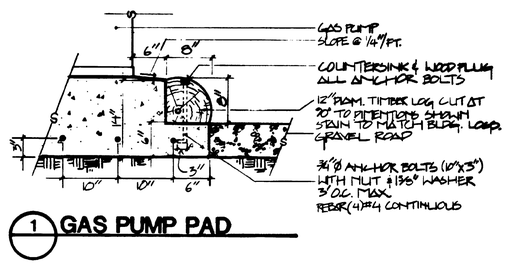

1A. SECTION

1 GAS PUMP PAD

1 0 1 2
SCALE OF FEET

DESIGNED: L.D.G.	SUB SHEET NO.	TITLE OF SHEET	DRAWING NO. 117 / 41073B
DRAWN: J.L.P.	S8	DETAIL SHEET	PKG. NO. DS 91
TECH. REVIEW:			SHEET 9 OF 55
DATE: 7/14/89			

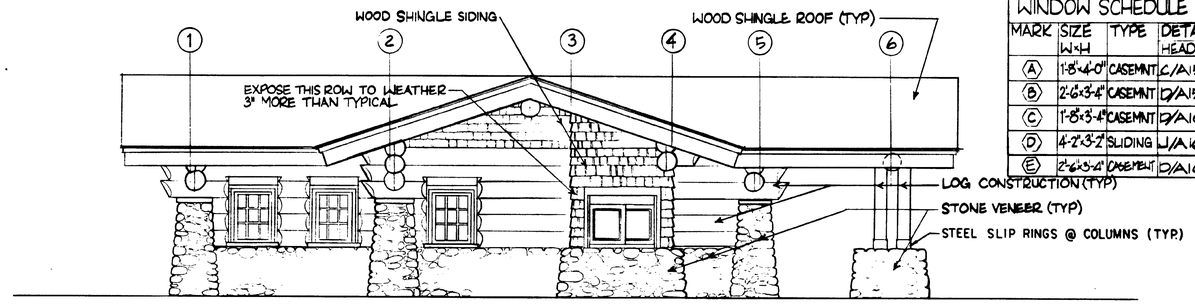

SOUTHEAST ELEVATION
SCALE A

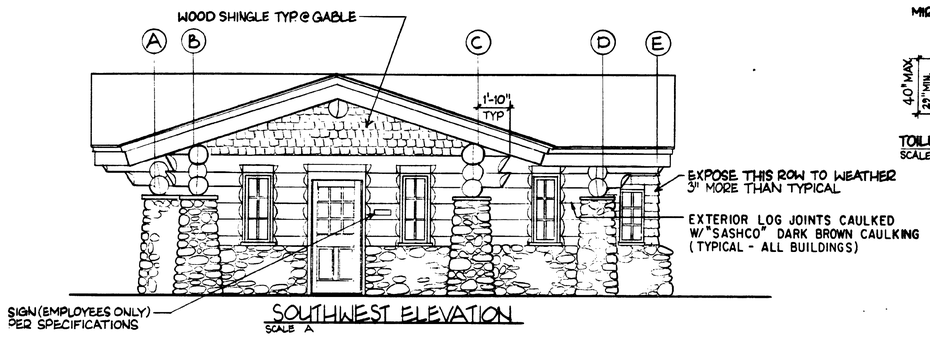

SOUTHWEST ELEVATION
SCALE A

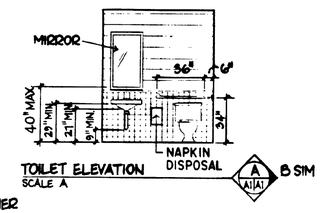

TOILET ELEVATION
SCALE A

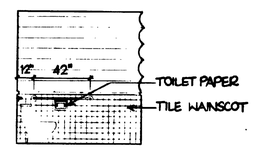

TOILET ELEVATION
SCALE A
A A1 A1 B SIM

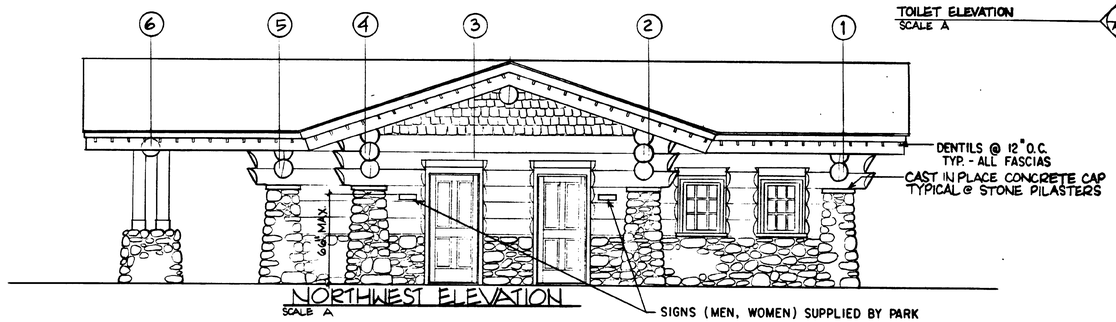

NORTHWEST ELEVATION
SCALE A

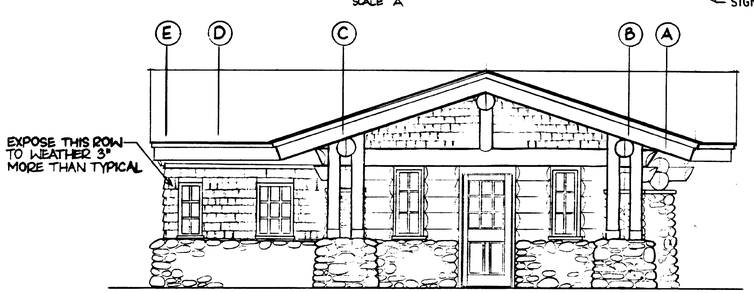

NORTHEAST ELEVATION
SCALE A

WINDOW SCHEDULE

MARK	SIZE W×H	TYPE	DETAILS HEAD	SILL	JAMB	REMARKS
A	1'-8"×4'-0"	CASEMNT	C/A15	G/A15	L/A15	W-CM2048
B	2'-6"×3'-4"	CASEMNT	D/A15	G/A15	L/A15	W-CM3240
C	1'-8"×3'-4"	CASEMNT	D/A16	E/A16	F/A16	W-CM2040
D	4'-2"×3'-2"	SLIDING	J/A16	J/A16	H/A16	SERIES 0200
E	2'-6"×3'-4"	CASEMNT	D/A16	E/A16	F/A16	W-CM3240

DOOR SCHEDULE

MARK	SIZE	TYPE	HDW GRP	DETAILS HEAD	SILL	JAMB	REMARKS
1	3'-0"×7'-0"	C	1	A/A15	E/A15	J/A15 K/A15	
2	3'-0"×7'-0"	C	1	A/A15	E/A15	J/A15 K/A15	
3	3'-0"×6'-8"	A	1	B/A15	F/A15	J/A15 SIM A/A16	
4	3'-0"×6'-8"	A	1	B/A15	F/A15	J/A15 SIM A/A16	
5	3'-0"×6'-8"	A	6	C/A16		G/A16	
6	3'-0"×6'-8"	A	6	C/A16		G/A16	
7	2'-8"×6'-8"	A	7	C/A16		G/A16	
8	3'-0"×6'-8"	A	6	C/A16		G/A16	
9	3'-0"×7'-0"	A	6	A/A15 SIM		J/A15 SIM B/A16	

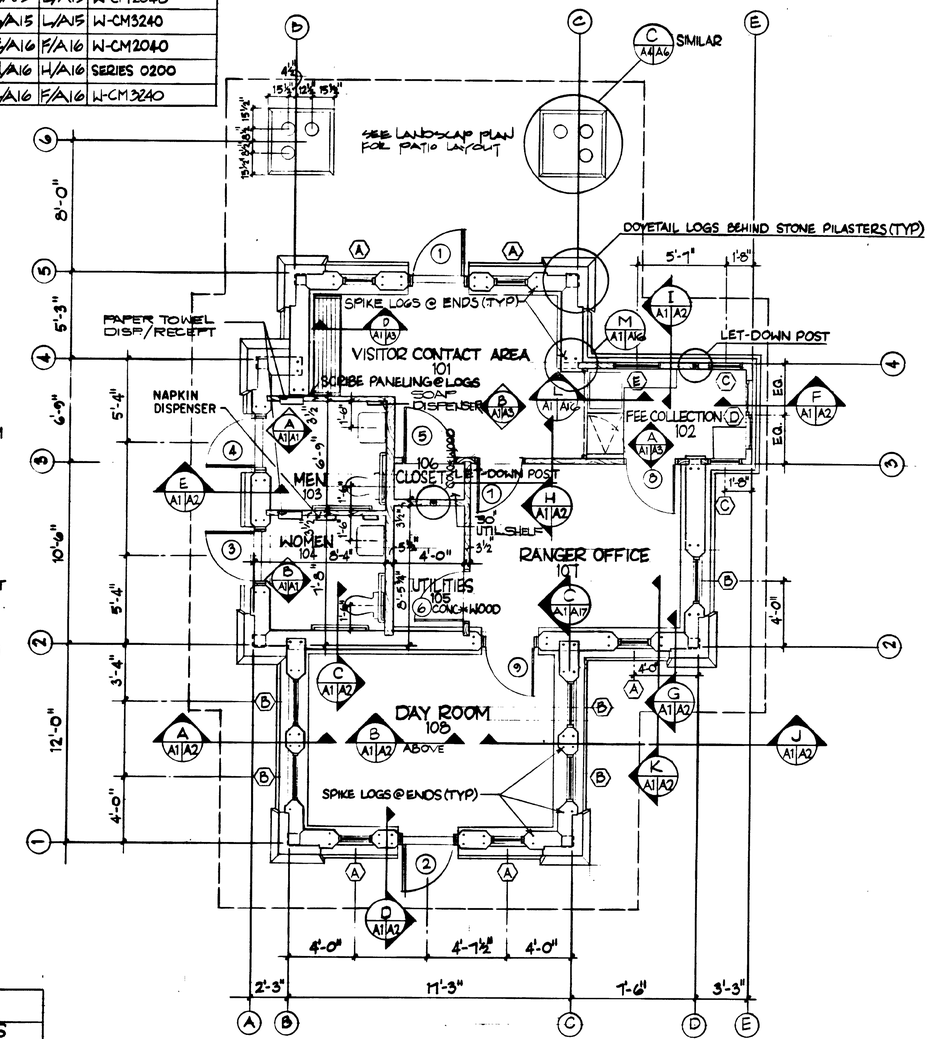

FLOOR PLAN
SCALE A

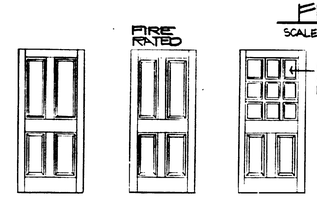

DOOR ELEVATIONS
N.T.S.

4 3 2 1 0 4 8
SCALE A

DESIGNED: ANDY BECK	SUB SHEET NO.	TITLE OF SHEET	DRAWING NO. 117 / 41,073B
DRAWN: KO	A1	ENTRANCE STATION ·PLAN ·ELEVATIONS	PKG. NO. GLAC. DS 91
TECH. REVIEW: EJC			SHEET 10 OF 55
DATE: 7-14-89			

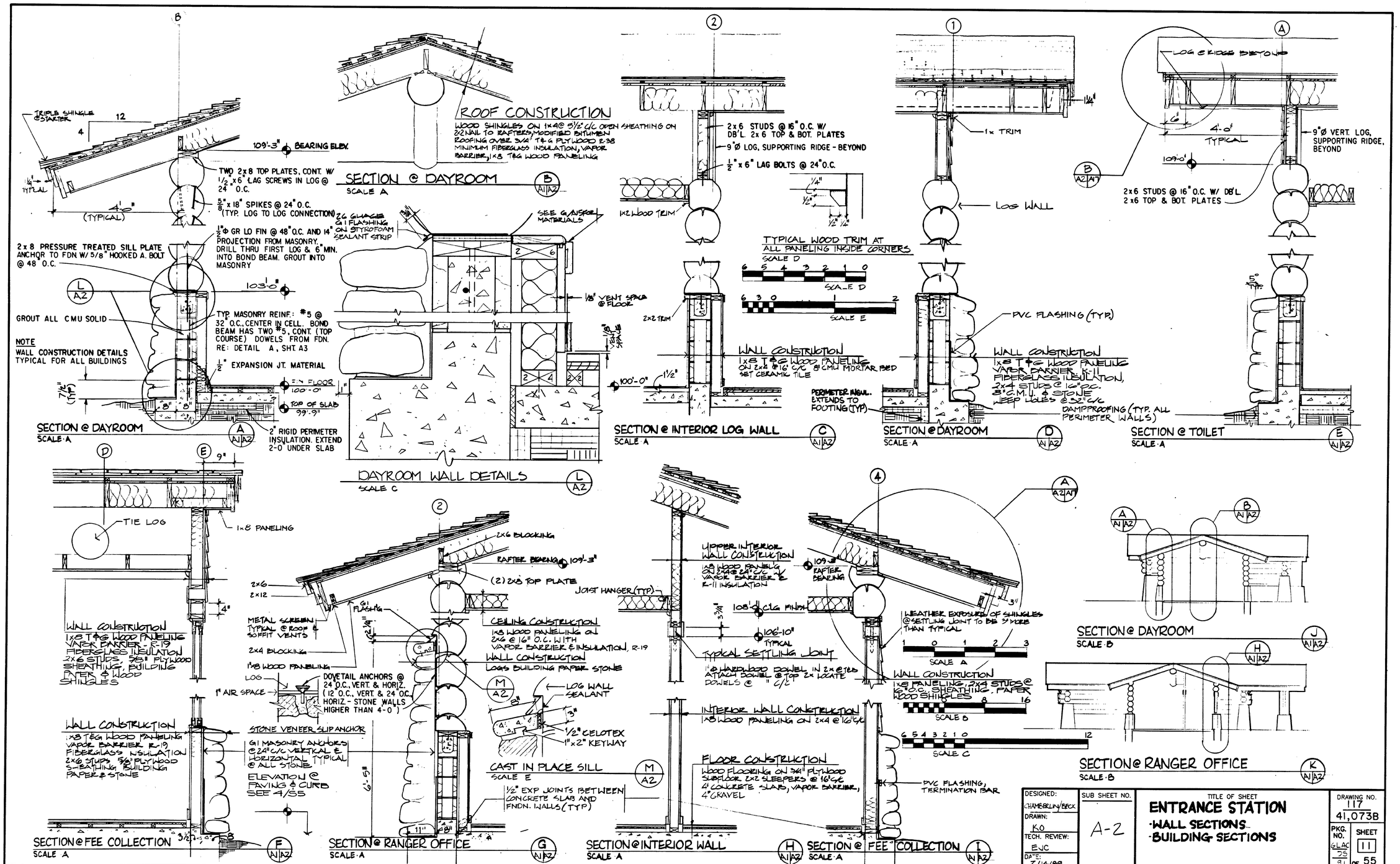

DESIGNED: CHAMBERLIN/BECK DRAWN: K.O TECH. REVIEW: EJC DATE: 7/14/89	SUB SHEET NO. A-2	TITLE OF SHEET **ENTRANCE STATION** ·WALL SECTIONS ·BUILDING SECTIONS	DRAWING NO. 117 41,073B PKG. NO. 6LAC 25 91 SHEET 11 OF 55

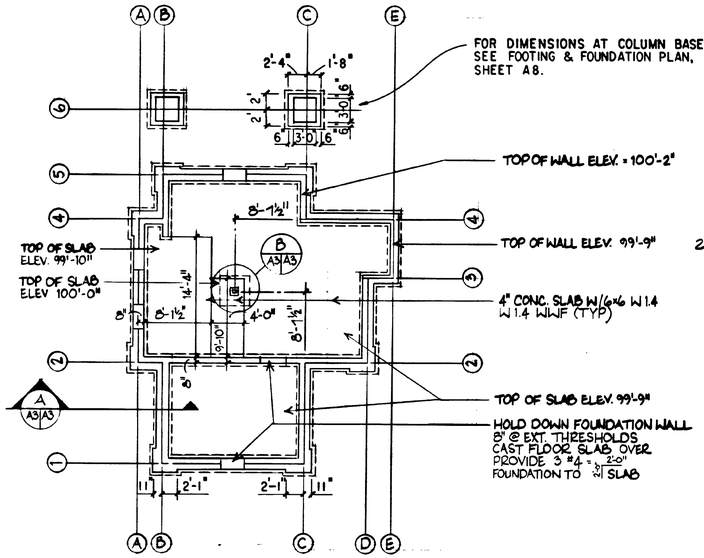

FOOTING & FOUNDATION PLAN
SCALE A

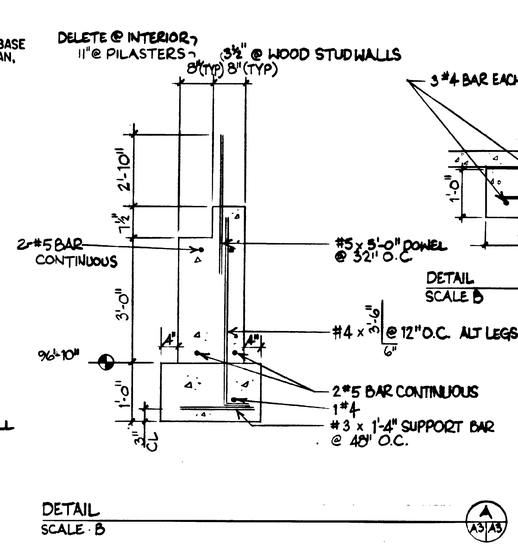

DETAIL
SCALE B

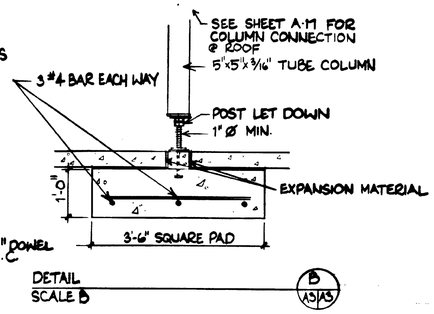

DETAIL
SCALE B

ROOF SHEATHING

3/4" T & G EXPOSURE I APA RATED SHEATHING. ATTACH TO JOISTS W/ 10d NAILS @ 6" O.C. AT SUPPORTED PANEL EDGES AND 10d NAILS @ 12" O.C. AT INTERMEDIATE SUPPORTS.

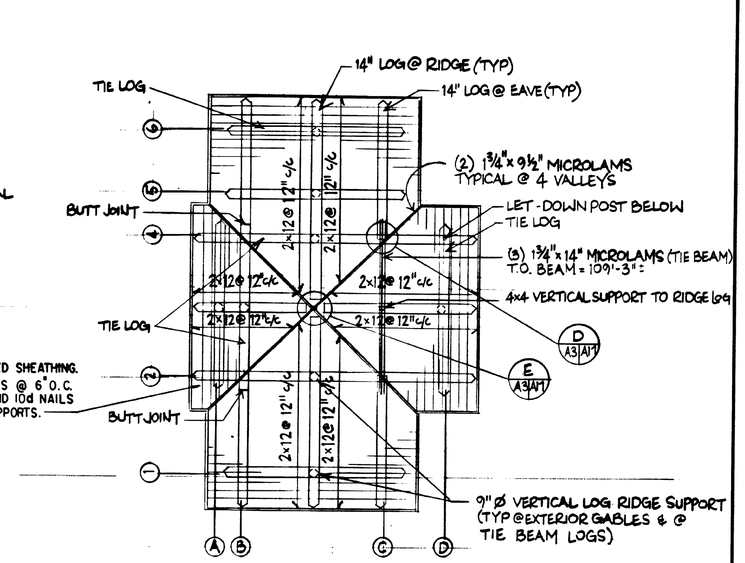

ROOF FRAMING & STRUCTURE
SCALE A

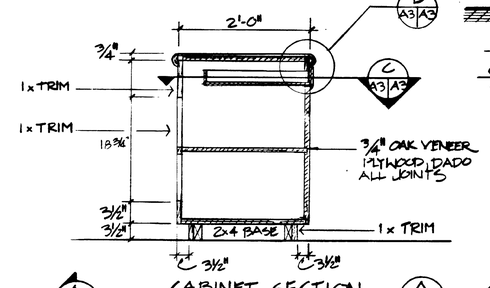

CABINET SECTION
SCALE - C

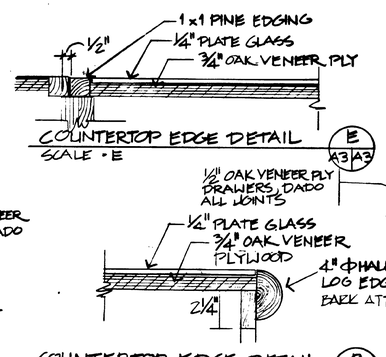

COUNTERTOP EDGE DETAIL
SCALE - E

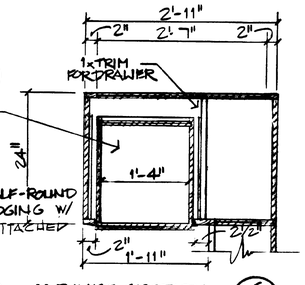

COUNTERTOP EDGE DETAIL
SCALE - E

CABINET SECTION
SCALE - C

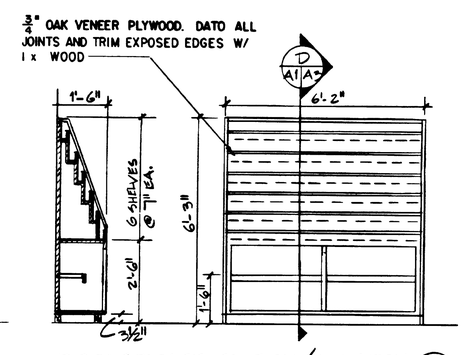

BOOK STORAGE SECTION/ELEVATION
SCALE - D

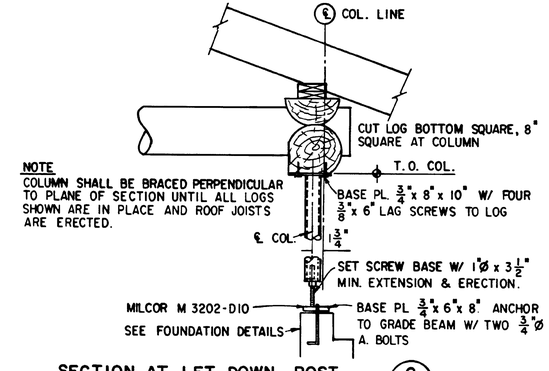

NOTE
COLUMN SHALL BE BRACED PERPENDICULAR TO PLANE OF SECTION UNTIL ALL LOGS SHOWN ARE IN PLACE AND ROOF JOISTS ARE ERECTED.

SECTION AT LET DOWN POST
SCALE B

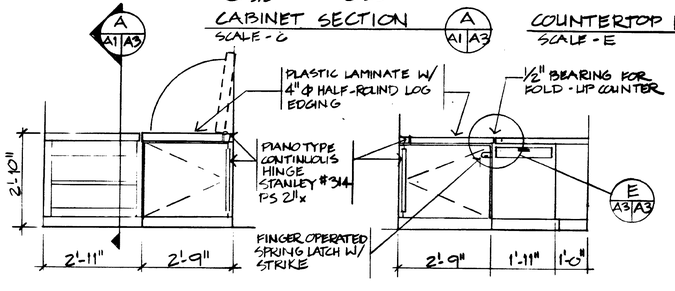

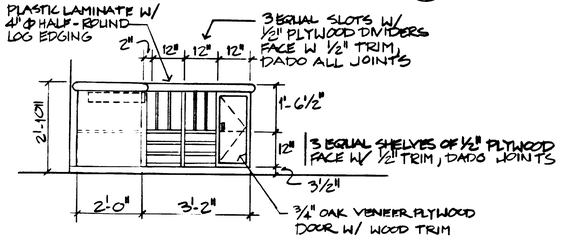

VISITOR COUNTER ELEVATIONS
SCALE - D

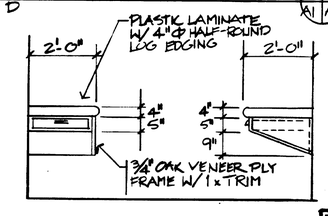

CASH REGISTER COUNTER
SCALE - D

SCALE A 8 0 8 16 SCALE OF FEET
SCALE B 1 0 1 2 3 SCALE OF FEET
SCALE G 1 0 1 2 SCALE OF FEET
SCALE D 2 0 2 4 SCALE OF FEET
SCALE E 4 0 4 8 SCALE OF INCHES

DESIGNED: CHAMBERLIN DRAWN: KO TECH. REVIEW: EWC DATE: 7/14/89	SUB SHEET NO. A-3	TITLE OF SHEET ENTRANCE STATION ·FOUNDATION & FOOTING ·ROOF FRAMING ·CASE WORK	DRAWING NO. 117 41,073B PKG. NO. GLAC DS 91 SHEET 12 OF 55

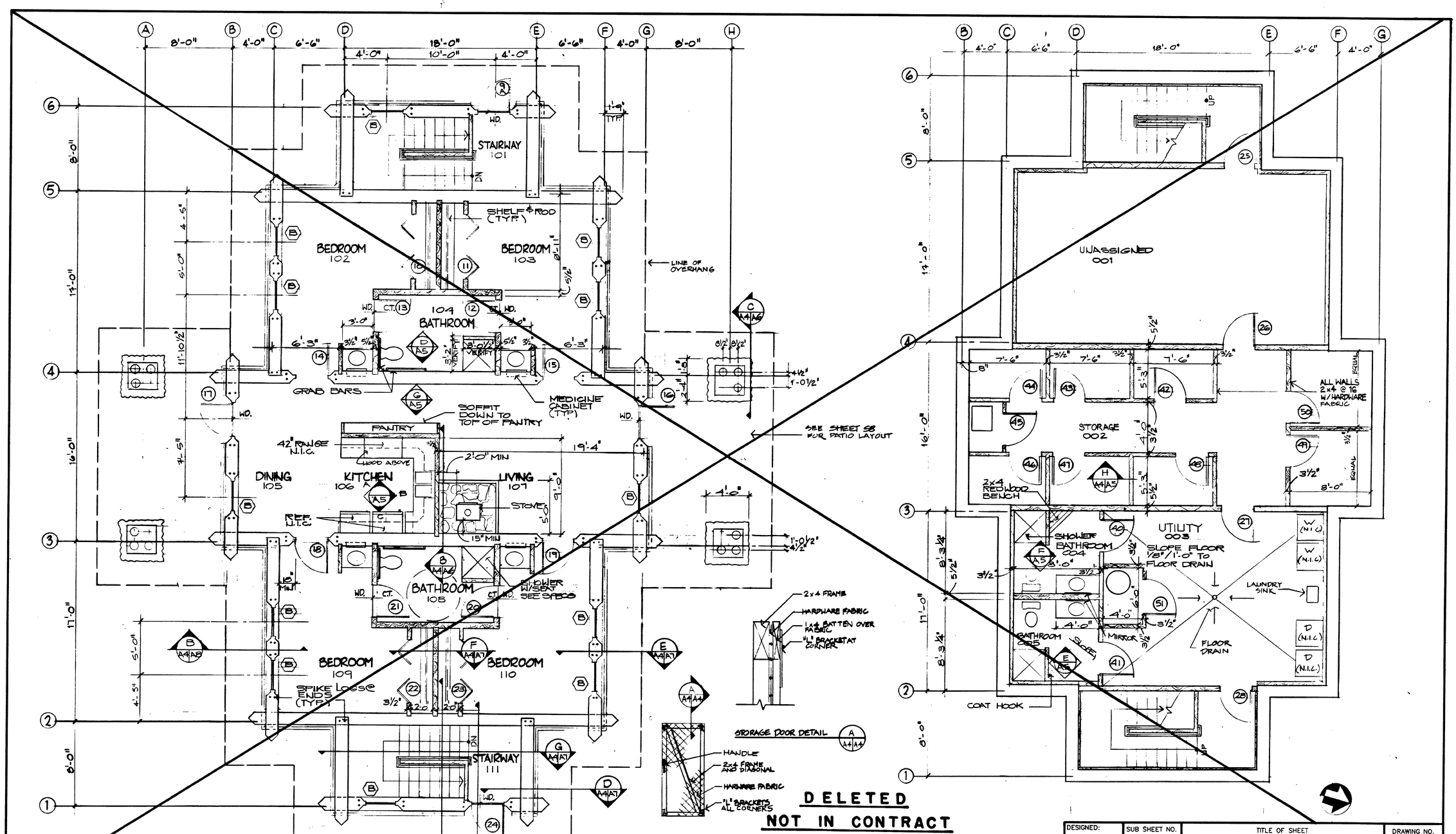

DELETED
NOT IN CONTRACT

FIRST FLOOR PLAN
SCALE · A

BASEMENT PLAN
SCALE A

SCALE · A

DESIGNED: ANDY BECK	SUB SHEET NO.	TITLE OF SHEET	DRAWING NO. 117
DRAWN: DW	A-4	DORMITORY · FLOOR PLANS (N.I.C.)	41,073B
TECH. REVIEW: EJC			PKG. NO. SLAC DS 91
DATE: 7/14/89			SHEET 13 OF 55

DOOR SCHEDULE

MARK	SIZE	TYPE	HDW. GRP.	DETAILS HEAD	SILL	JAMB	REMARKS
9A	3'-0" x 6'-8"	C	2	B/A15	E/A15	J/A15 K/A15	
10	PR 3'-0" x 6'-0"	E	11	C/A16		G/A16	BI-FOLD
11	PR 3'-0" x 6'-8"	E	11	C/A16		G/A16	BI-FOLD
12	3'-0" x 6'-8"	A	8	C/A16		G/A16 SIM	
13	3'-0" x 6'-8"	A	8	C/A16		G/A16 SIM	
14	3'-0" x 6'-8"	B	9	B/A15 SIM		B/A16 J/A15 SIM	20 MIN. DOOR & FRAME
15	3'-0" x 6'-8"	B	9	B/A15 SIM		B/A16 J/A15 SIM	20 MIN. DOOR & FRAME
16	3'-0" x 7'-0"	C	2	A/15	E/A15	J/A15 K/A15	
17	3'-0" x 7'-0"	C	2	A/15	E/A15	J/A15 K/A15	
18	3'-0" x 6'-8"	B	9	B/A15 SIM		B/A16 J/A15 SIM	20 MIN. DOOR & FRAME
19	3'-0" x 6'-8"	B	9	B/A15 SIM		B/A16 J/A15 SIM	20 MIN. DOOR & FRAME
20	3'-0" x 6'-8"	A	8	C/A16		G/A16 SIM	
21	3'-0" x 6'-8"	A	8	C/A16		G/A16 SIM	
22	PR 3'-0" x 6'-8"	E	11	C/A16		G/A16	BI-FOLD
23	PR 3'-0" x 6'-8"	E	11	C/A16		G/A16	BI-FOLD
24	2'-0" x 6'-8"	C	2	B/A15		E/A15	
25	3'-0" x 6'-8"	A	12	C/A16		G/A16	
26	3'-0" x 6'-8"	A	7	C/A16		G/A16	
27	3'-0" x 6'-8"	A	7	C/A16		G/A16	
28	3'-0" x 6'-8"	A	12	C/A16		G/A16	
40	3'-0" x 6'-8"	A	10	C/A16		G/A16	
41	3'-0" x 6'-8"	A	10	C/A16		G/A16	
42	3'-0" x 6'-8"	D	13	C/A16		G/A16	
43	3'-0" x 6'-8"	D	13	C/A16		G/A16	
44	3'-0" x 6'-8"	D	13	C/A16		G/A16	
45	3'-0" x 6'-8"	D	13	C/A16		G/A16	
46	3'-0" x 6'-8"	D	13	C/A16		G/A16	
47	3'-0" x 6'-8"	D	13	C/A16		G/A16	
48	3'-0" x 6'-8"	D	13	C/A16		G/A16	
49	3'-0" x 6'-8"	D	13	C/A16		G/A16	
50	3'-0" x 6'-8"	D	13	C/A16		G/A16	
51	3'-0" x 6'-8"	A	6	C/A16		G/A16	

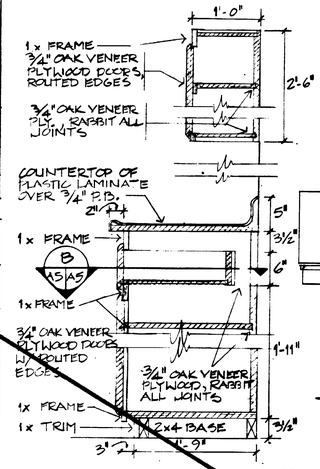

CABINET SECTION (A / A5/A5)
SCALE - C

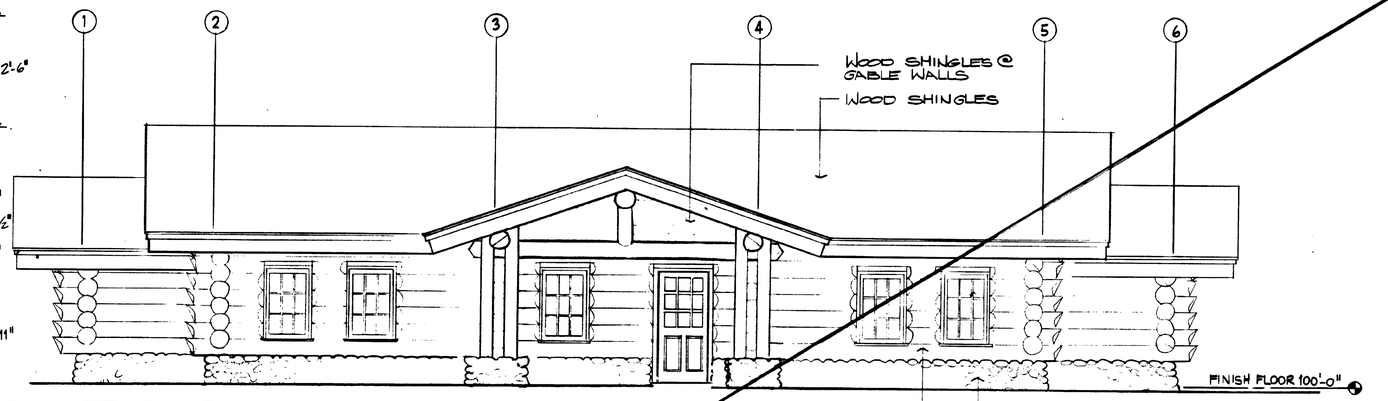

NORTH ELEVATION SOUTH ELEVATION IS A MIRROR IMAGE
SCALE - A

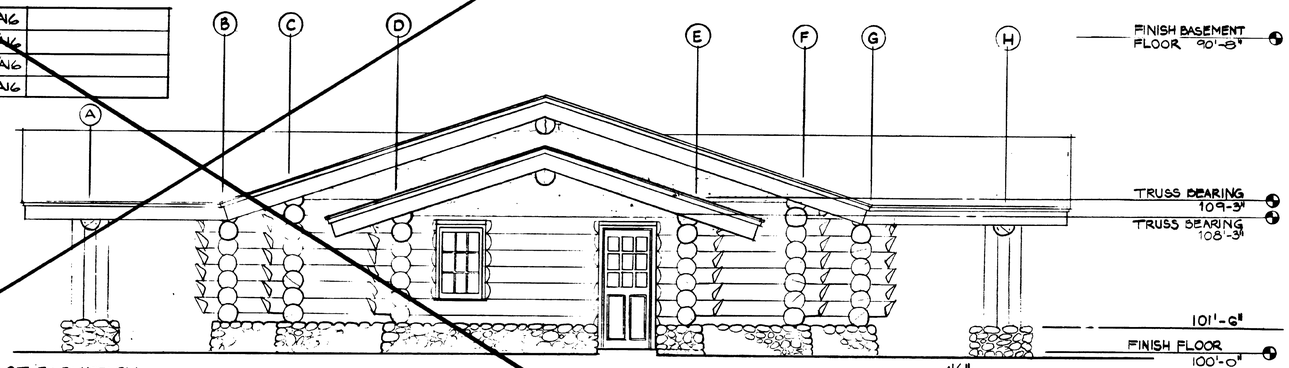

EAST ELEVATION WEST ELEVATION IS A MIRROR IMAGE
SCALE A

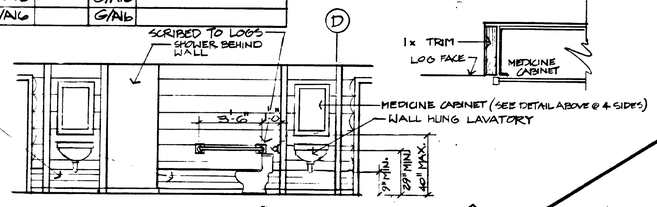

BATHROOM ELEVATION FIRST FLOOR TYP. (D / A5/A4)
SCALE - A

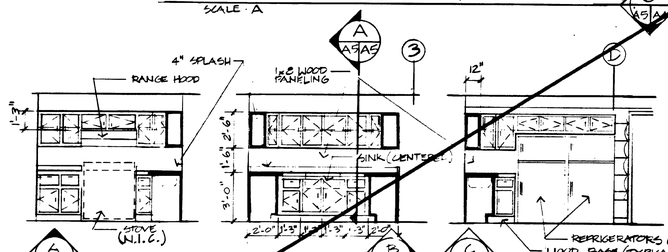

KITCHEN ELEVATIONS
SCALE A

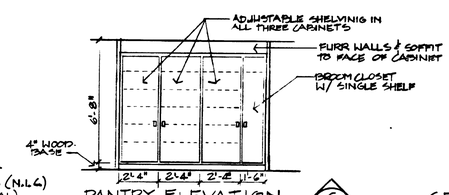

PANTRY ELEVATION (G / A5/A4)
SCALE A

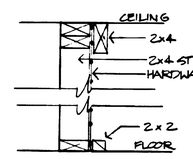

SECTION THRU STORAGE WALLS (H / A4/A5)
SCALE - B

DELETED
NOT IN CONTRACT

CABINET SECTION (B / A5/A5)
SCALE - C

MARK	SIZE	TYPE	DETAILS JAMB	HEAD	SILL	REMARKS
B	2'-6" x 3'-4"	COMT.	L/A15	D/A15	H/A15	MARVIN CM-3240

WINDOW SCHEDULE

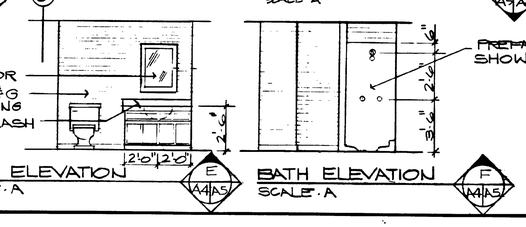

BATH ELEVATION (E / A4/A5)
SCALE - A

BATH ELEVATION (F / A4/A5)
SCALE - A

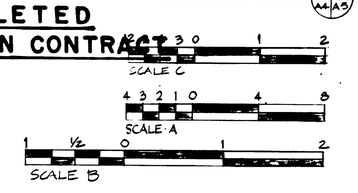

DESIGNED: SEX CHAMBERLIN	SUB SHEET NO.	TITLE OF SHEET	DRAWING NO. 117 41,073B
DRAWN: KO	A-5	DORMITORY ELEVATIONS	PKG. NO. GLAC DS 91
TECH. REVIEW: EJC		N.I.C.	SHEET 14 OF 55
DATE: 7/14/89			

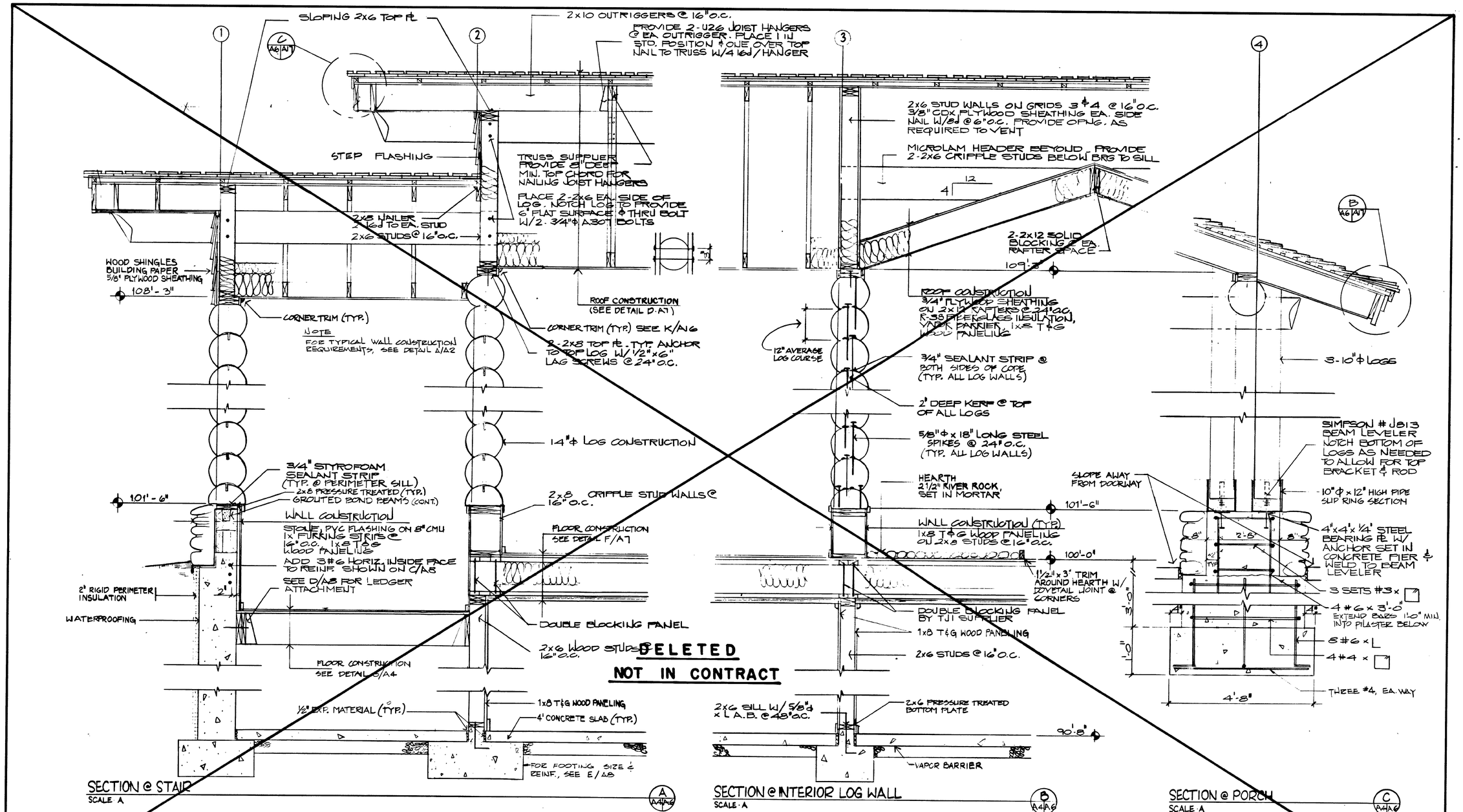

DESIGNED:	SUB SHEET NO.	TITLE OF SHEET	DRAWING NO.
BECK/CHAMBERLIN	A-6	DORMITORY WALL SECTIONS	117 41,073B
DRAWN: KO			PKG. NO. GLAC DS 91
TECH. REVIEW: EJC		N.I.C.	SHEET 15 OF 55
DATE: 7/14/89			

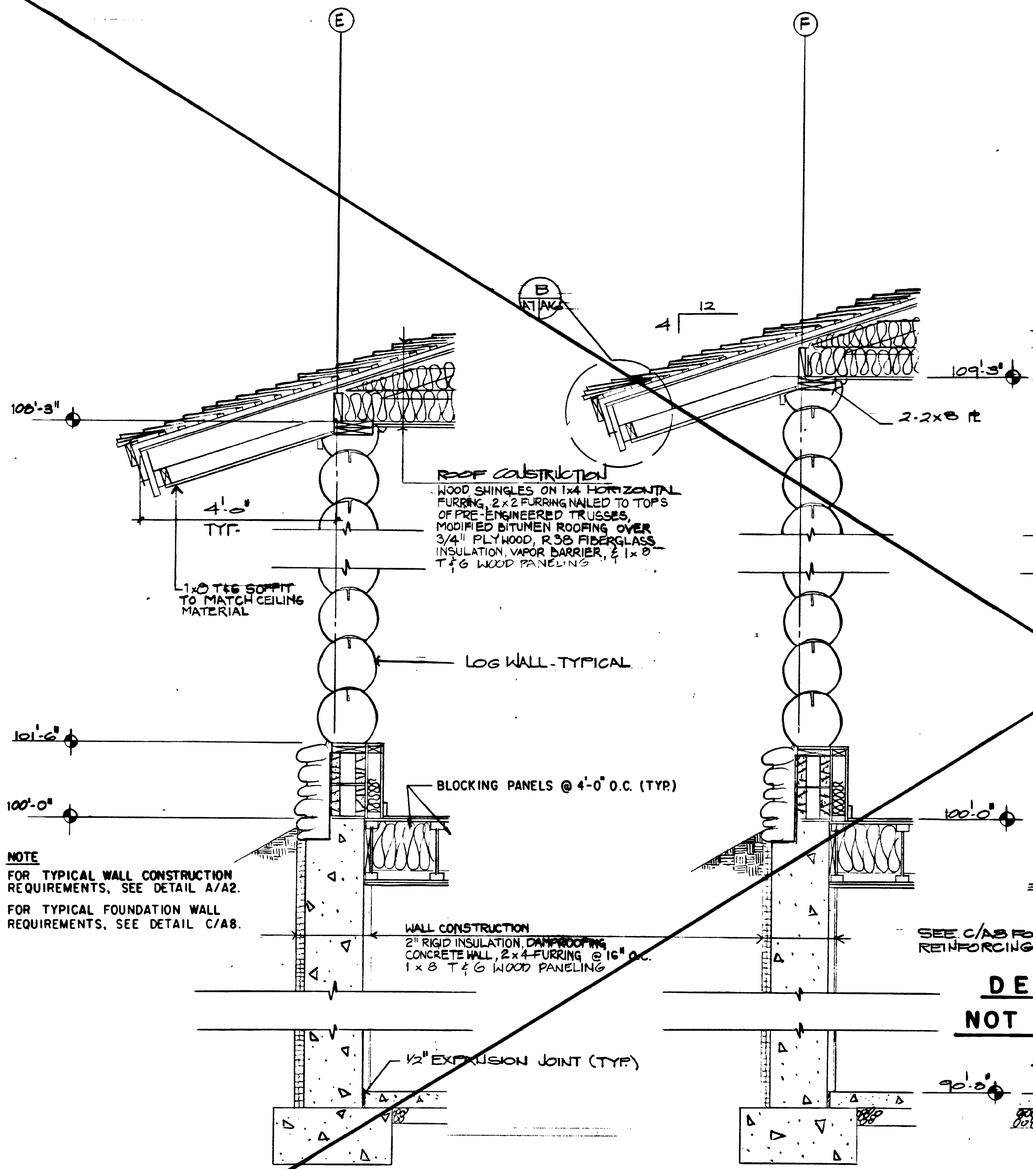

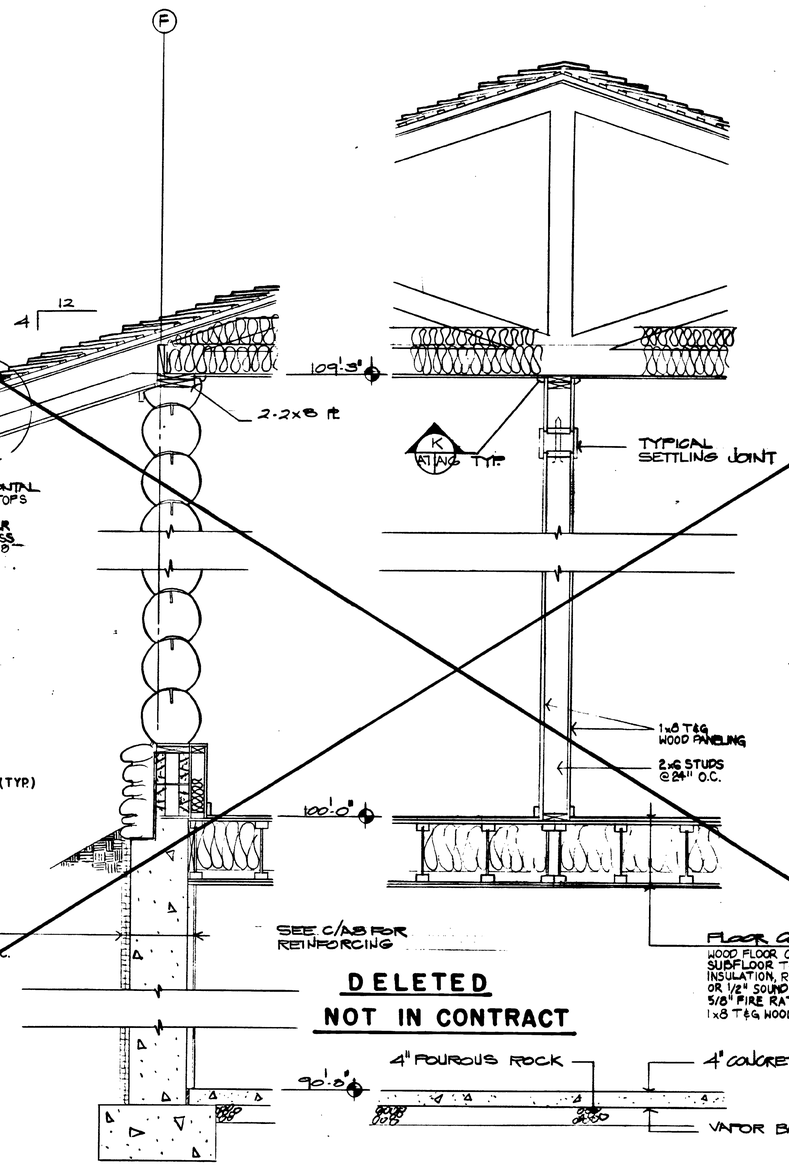

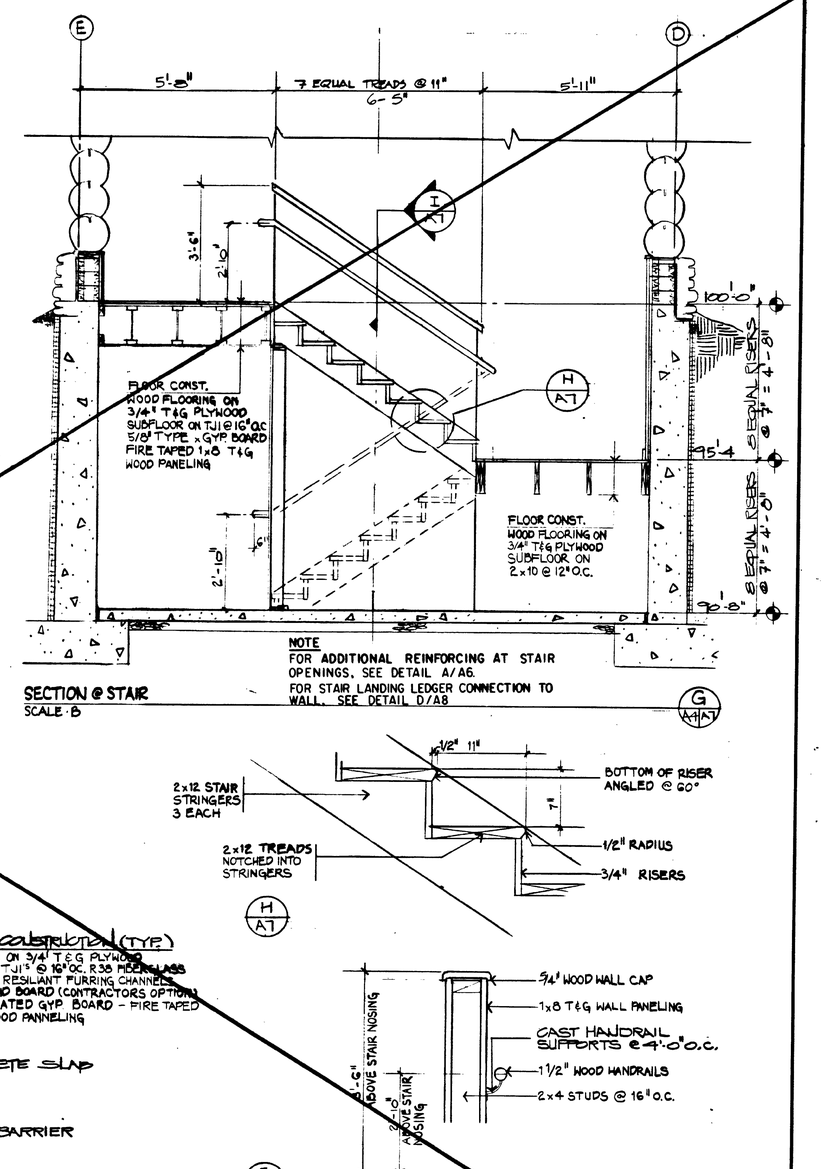

2 1 0 2 4
SCALE - B

1 0 1 2 3
SCALE - A

DESIGNED: CHAMBERLIN/BECK DRAWN: KO TECH. REVIEW: EJC DATE: 7/14/89	SUB SHEET NO. A-7	TITLE OF SHEET DORMITORY ·WALL SECTIONS ·STAIR SECTION (N.I.C)	DRAWING NO. 117 41,073B PKG. NO. GLAC DS 91 SHEET 16 OF 55

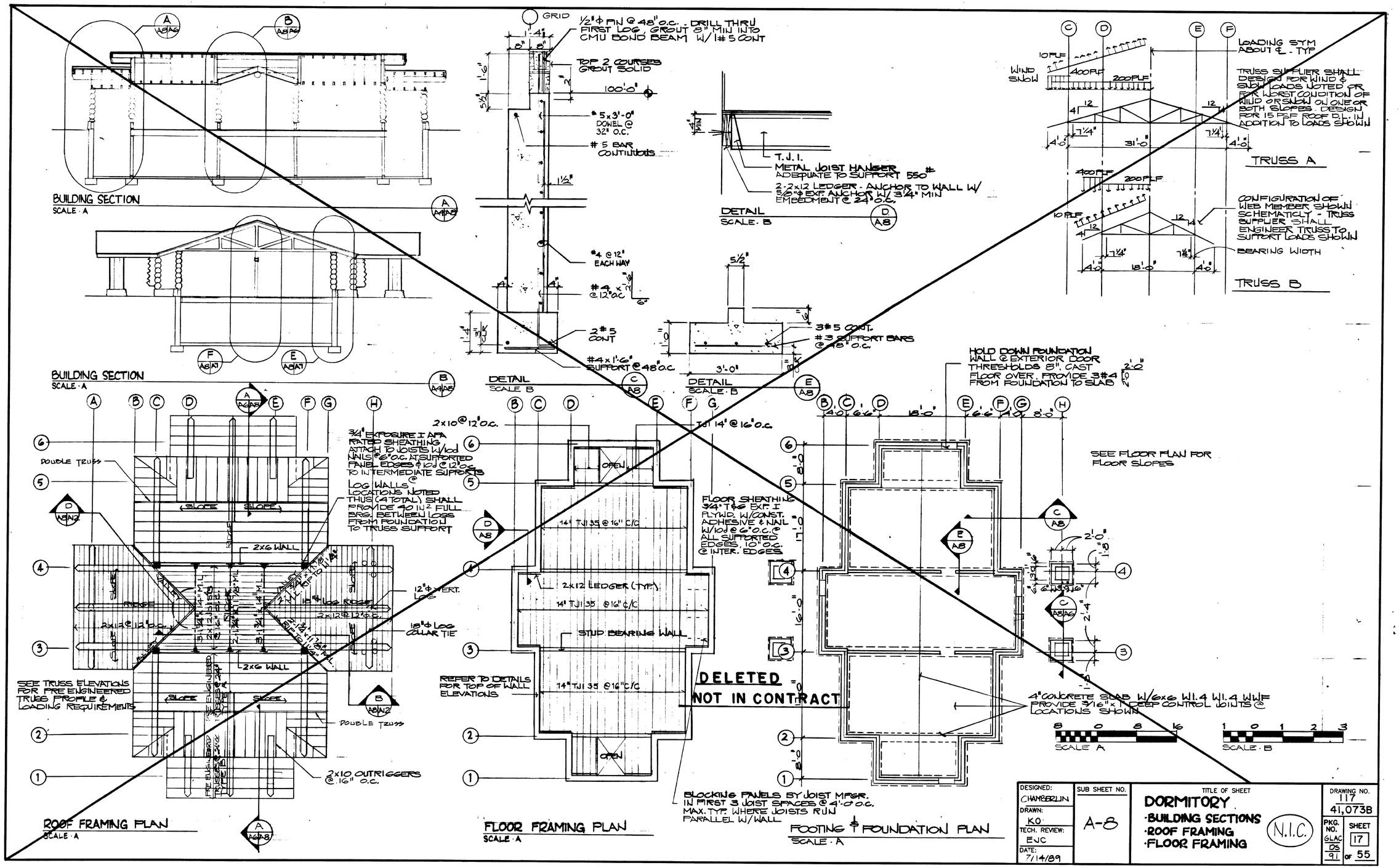

DESIGNED: CHAMBERLIN	SUB SHEET NO.	TITLE OF SHEET	DRAWING NO. 117 / 41,073B
DRAWN: KO	A-8	DORMITORY ·BUILDING SECTIONS ·ROOF FRAMING ·FLOOR FRAMING	N.I.C.
TECH. REVIEW: EJC			PKG. NO. GLAC 05 91 — SHEET 17 OF 55
DATE: 7/14/89			

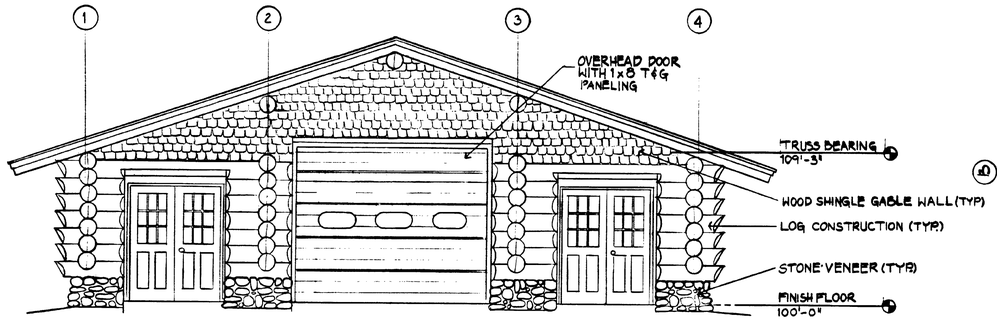

SOUTH ELEVATION
SCALE A

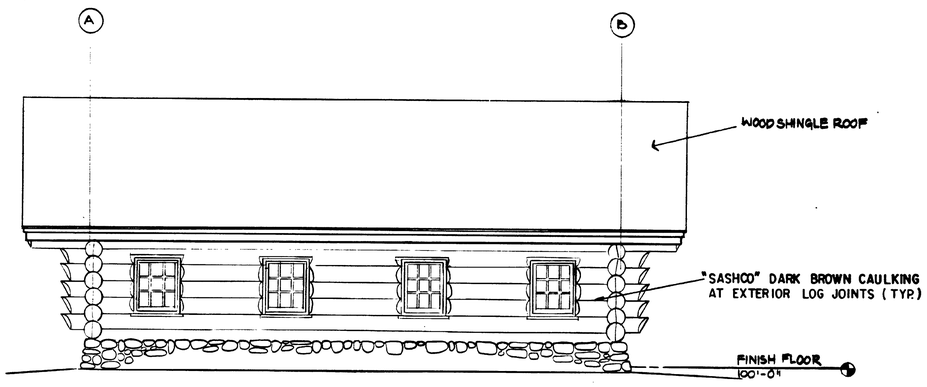

WEST ELEVATION
SCALE A

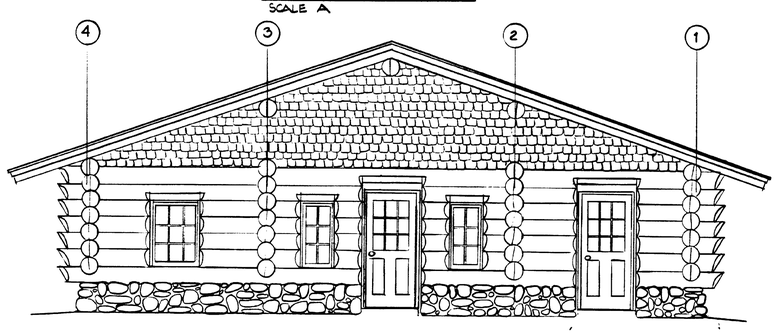

NORTH ELEVATION
SCALE A

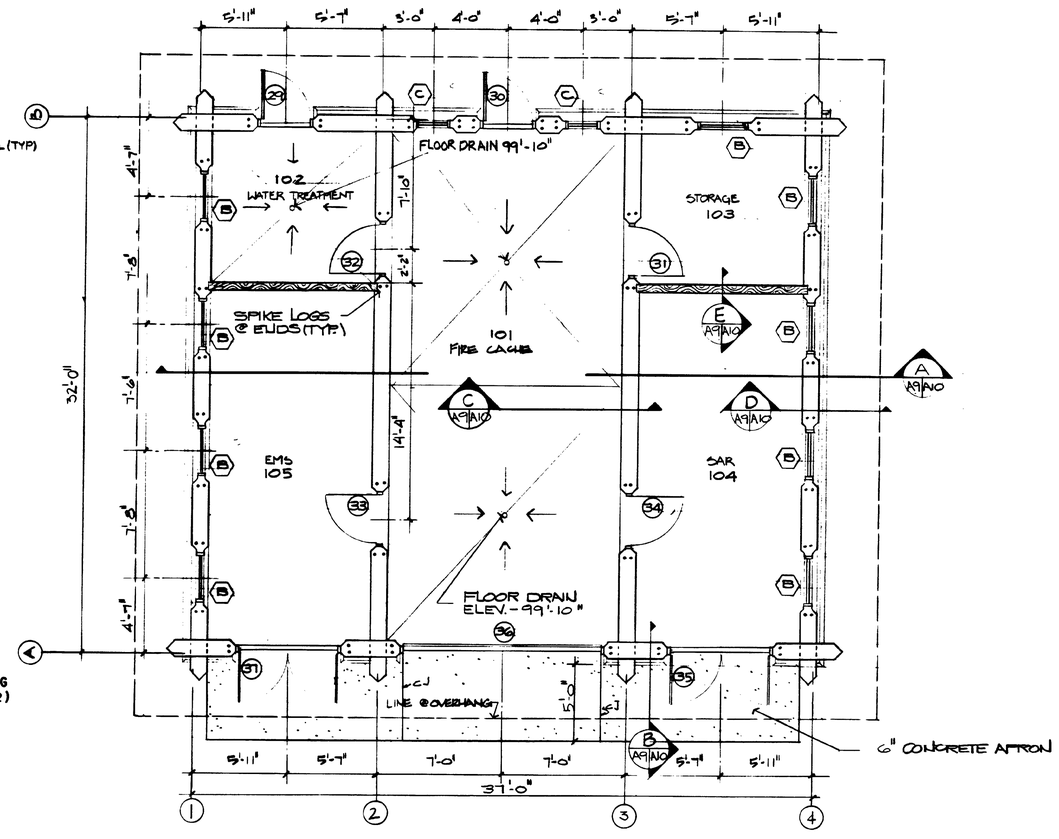

FLOOR PLAN
SCALE A

WINDOWS						
MARK	SIZE WxH	TYPE	DETAILS JAMB	DETAILS HEAD	DETAILS SILL	REMARKS
B	2'-6"x3'-4"	CASEMENT	L/A15	D/A15	H/A15	MARVIN #W-CM3240
C	1'-8"x3'-4"	CASEMENT	L/A15	D/A15	H/A15	MARVIN #W-CM2040

SCALE A

DESIGNED: ANDY BECK	SUB SHEET NO.	TITLE OF SHEET	DRAWING NO. 117 41,073B
DRAWN: KO	A-9	FIRE CACHE ·ELEVATIONS ·PLAN	PKG. NO. GLAC 05 91
TECH. REVIEW: EJC			SHEET 18 OF 55
DATE: 7/14/89			

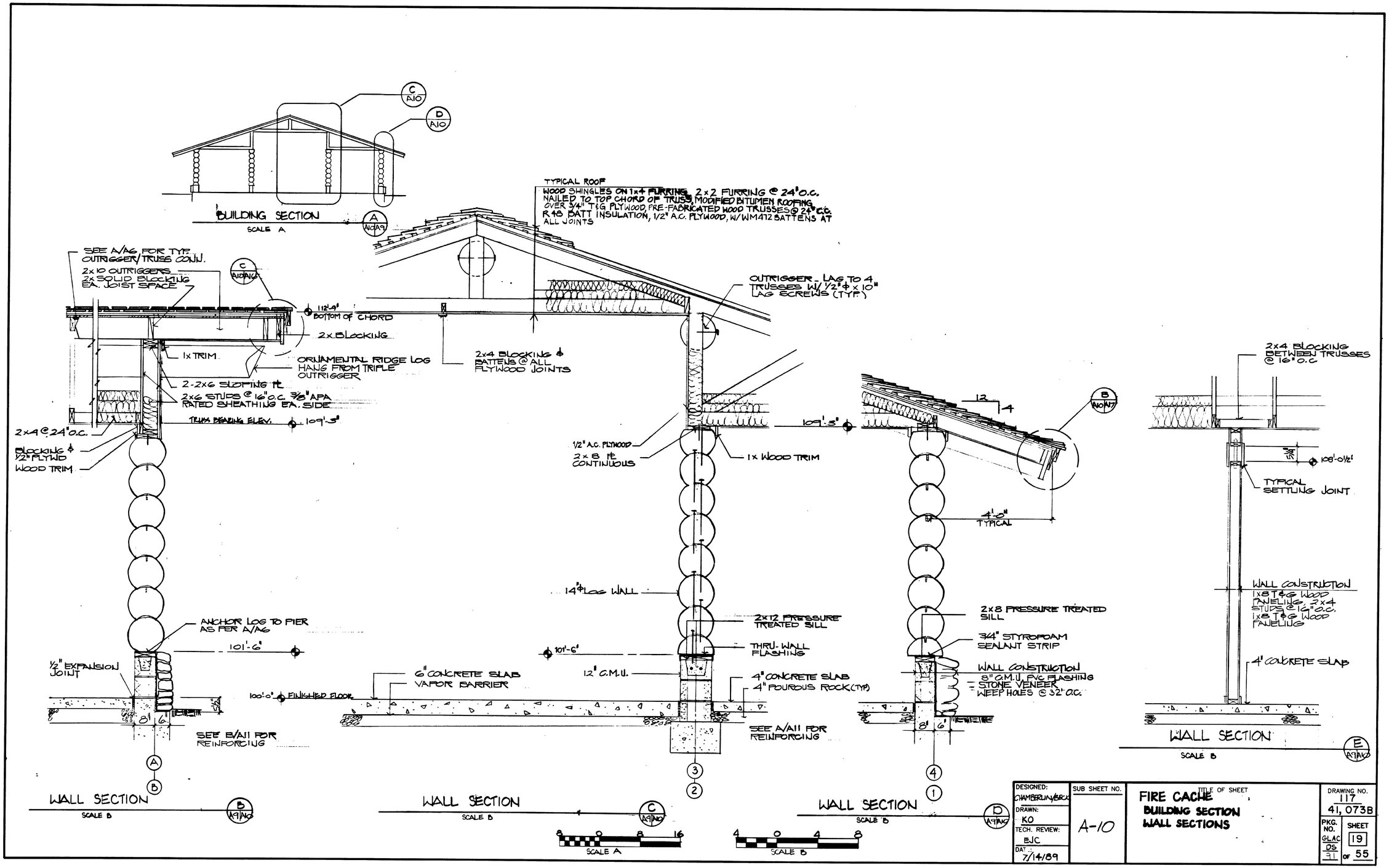

DESIGNED: CHAMBERLIN/BERG	SUB SHEET NO.	TITLE OF SHEET	DRAWING NO.
DRAWN: KO	A-10	FIRE CACHE BUILDING SECTION WALL SECTIONS	117 41,073B
TECH. REVIEW: BJC			PKG. NO. GLAC DS 91
DAT: 7/14/89			SHEET 19 OF 55

DOOR SCHEDULE

MARK	SIZE	TYPE	HDW GRP	DETAILS HEAD	DETAILS SILL	DETAILS JAMB	REMARKS
29	3'-0"x7'-0"	C	2	A/A15	E/A15	J/A15 K/A15	
30	3'-0x7'-0"	C	2	A/A15	E/A15	J/A15 K/A15	
31	3'-0"x6'-8"	A	7	E/A15 SIM		E/A15 J/A15 SIM	
32	3'-0"x6'-8"	A	7	E/A15 SIM		E/A15 J/A15 SIM	
33	3'-0"x6'-8"	A	7	E/A15 SIM		E/A15 J/A15 SIM	
34	3'-0"x6'-8"	A	7	E/A15 SIM		E/A15 J/A15 SIM	
35	PR 3'-0"x7'-0"	C	4	A/A15	E/A15	J/A15 K/A15	
36	12'-0"x10'-0"	SEE EXT ELEVATION	14	F/A17	F/A17	F/A17	O. H. DOOR
37	PR 3'-0"x7'-0"	C	4	A/A15	E/A15	J/A15 K/A15	

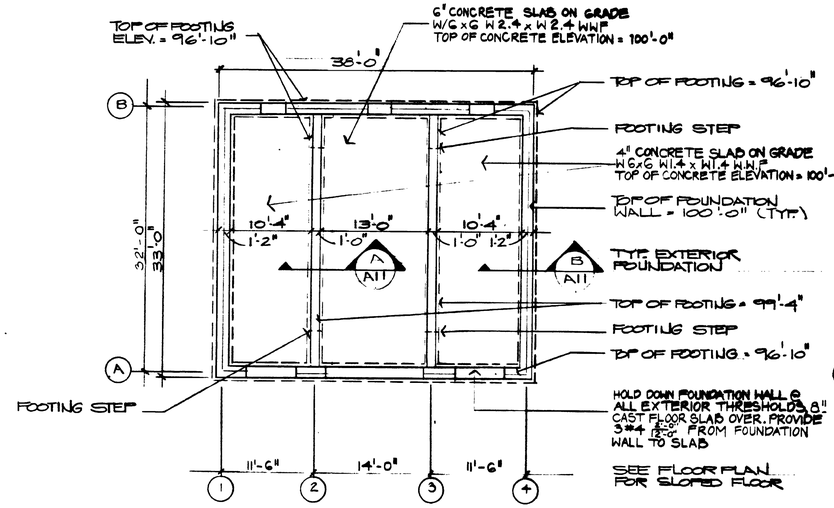

FOOTING & FOUNDATION PLAN
SCALE A

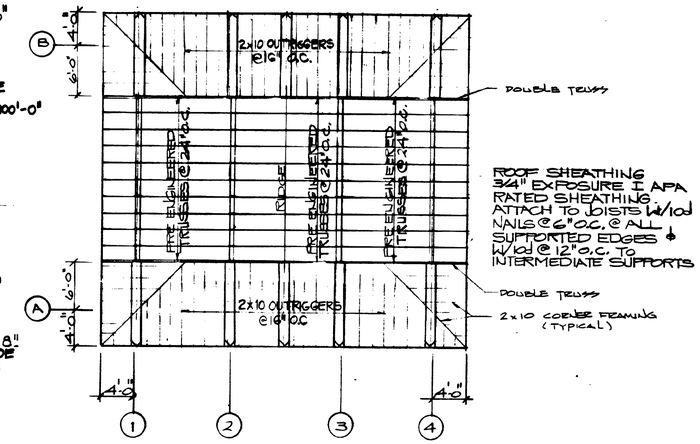

ROOF FRAMING PLAN
SCALE A

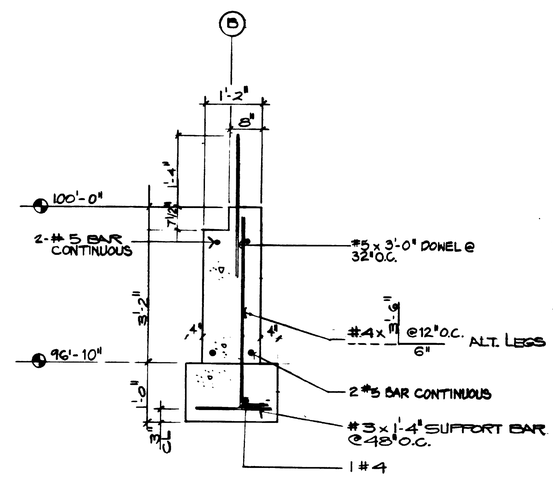

DETAIL B/A11
SCALE B

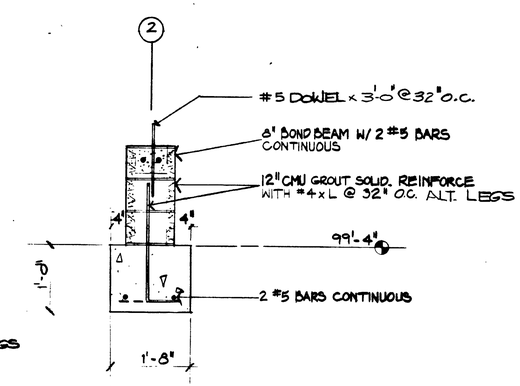

DETAIL A/A11
SCALE B

SCALE A: 8 0 8 16

SCALE B: 1 0 1 2 3

DESIGNED: CHAMBERLIN	SUB SHEET NO.	TITLE OF SHEET
DRAWN: KO	A-11	FIRE CACHE
TECH. REVIEW: EJC		FOOTING & FOUNDATION
DATE: 7/14/89		

DRAWING NO. 117 / 41,073B

PKG. NO. GLAC DS 91

SHEET 20 OF 55

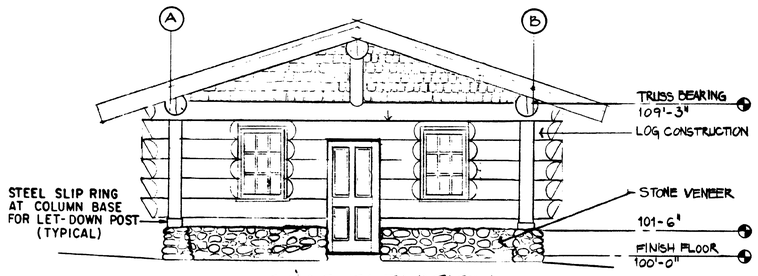

EAST ELEVATION
SCALE A

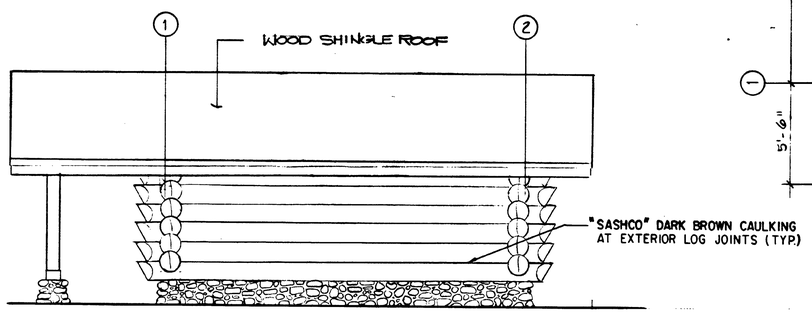

NORTH ELEVATION
SCALE A

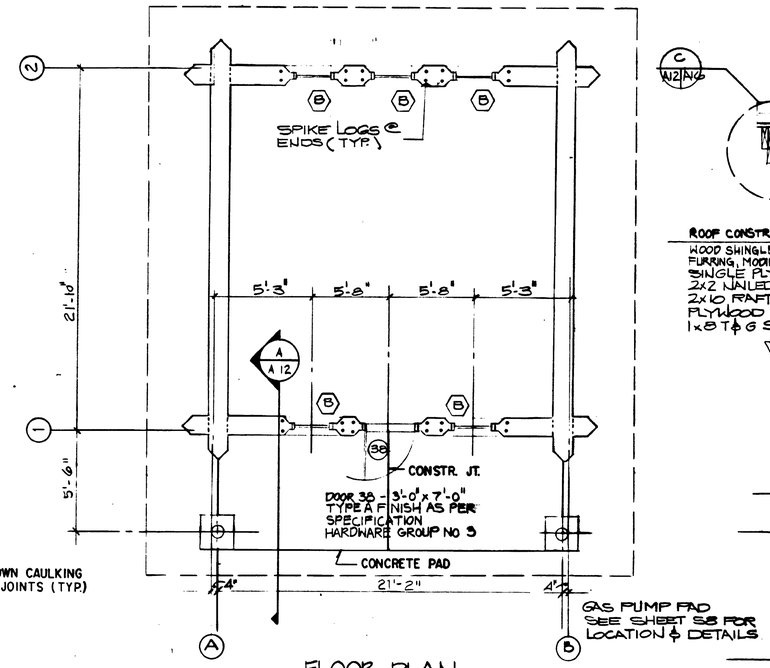

FLOOR PLAN
SCALE A

WINDOWS						
MARK	R.O. W x H	TYPE	DETAILS JAMB	HEAD	SILL	REMARKS
B	2'-6" x 3'-4"	CASEMENT	L/A15	D/A15	H/A15	MARVIN # W-CM3240

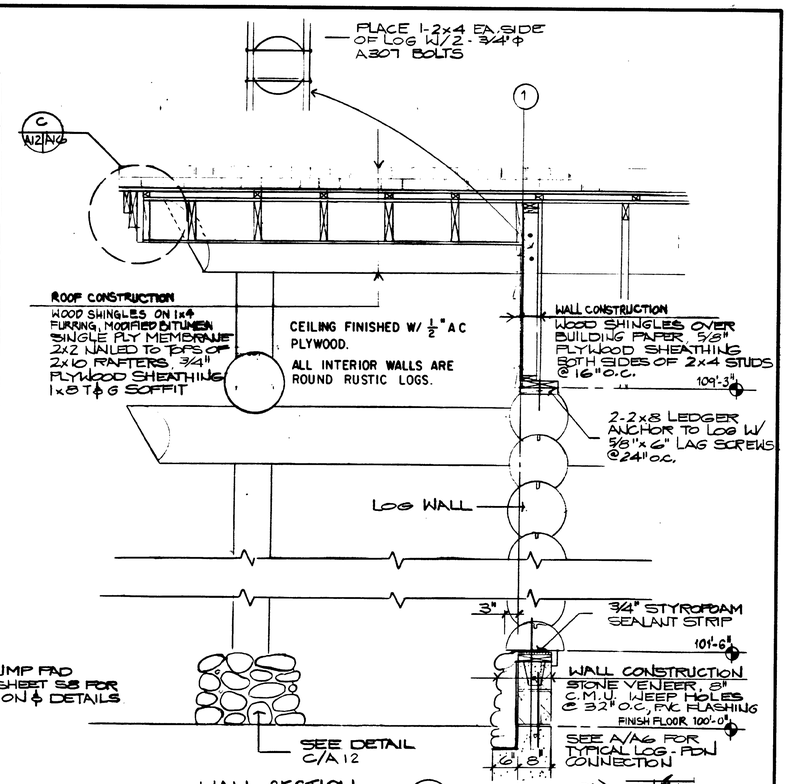

WALL SECTION
SCALE C

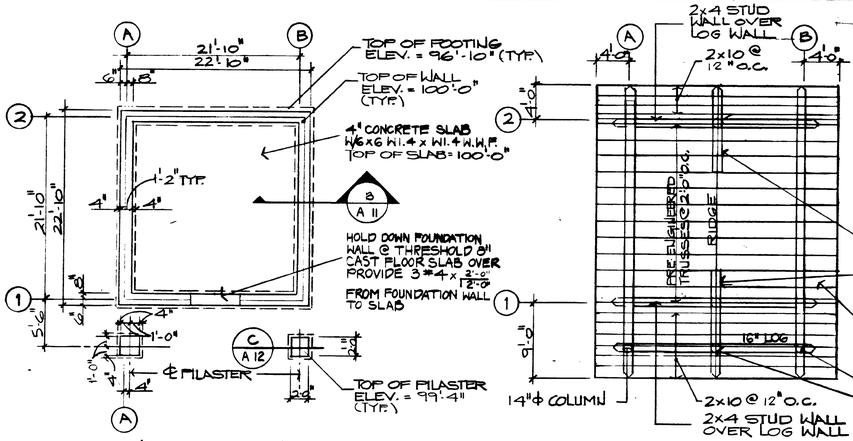

FOOTING & FOUNDATION PLAN
SCALE B

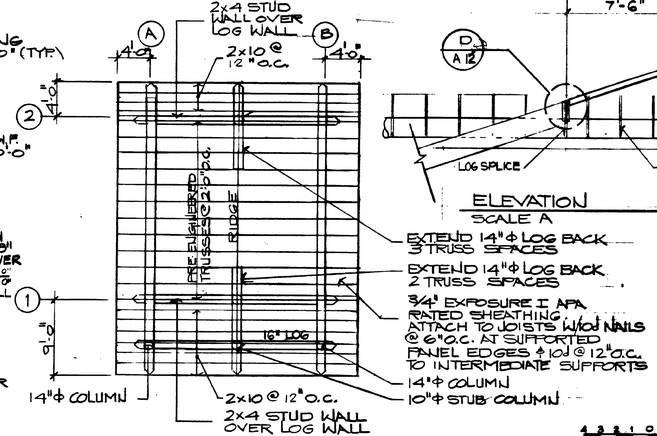

ROOF FRAMING PLAN
SCALE B

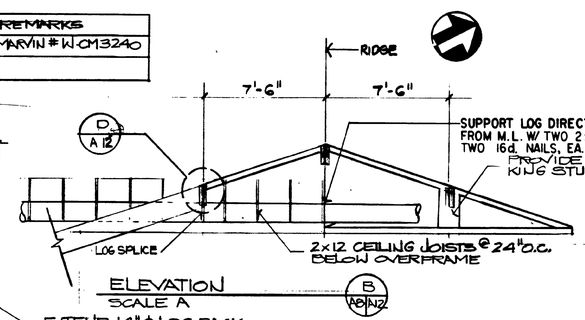

ELEVATION
SCALE A
B
A 12 / A 12

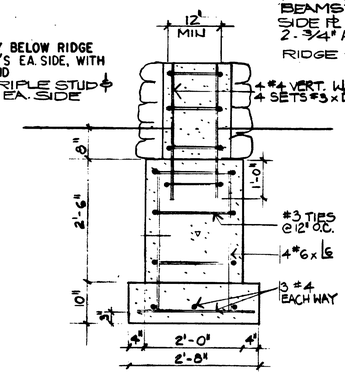

FOUNDATION DETAIL
SCALE C
C
A 12

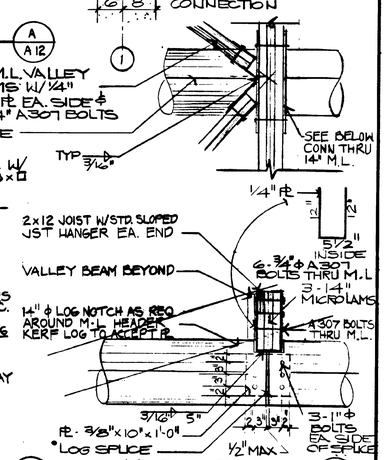

CONNECTION DETAIL
SCALE C
D
A 12

SCALE A

SCALE B

SCALE C

DESIGNED:	SUB SHEET NO.	TITLE OF SHEET	DRAWING NO.
EBOY/CHAMBERLIN	A-12	FLAMMABLE STORAGE ELEVATIONS FLOOR PLAN WALL SECTION	117 41,073B
DRAWN: MB			PKG. NO. GLAC DS 91
TECH. REVIEW: EJC			SHEET 21 OF 55
DATE: 7/14/89			

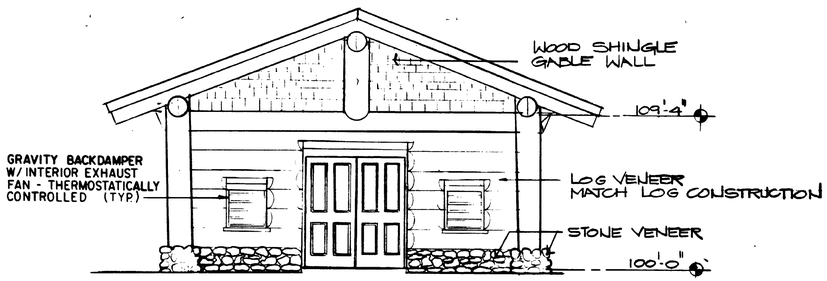

ELEVATION
SCALE A

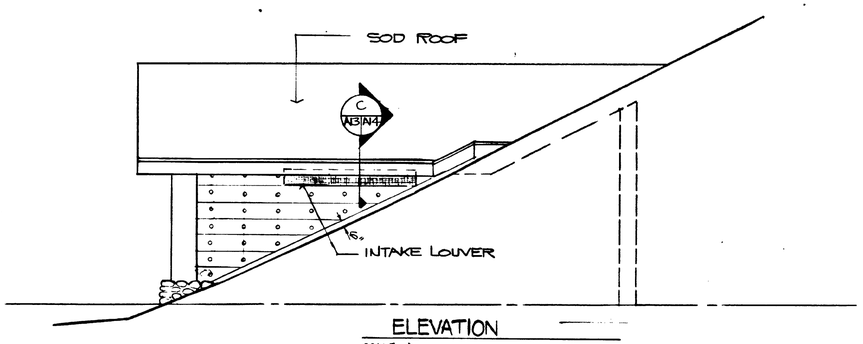

ELEVATION
SCALE A

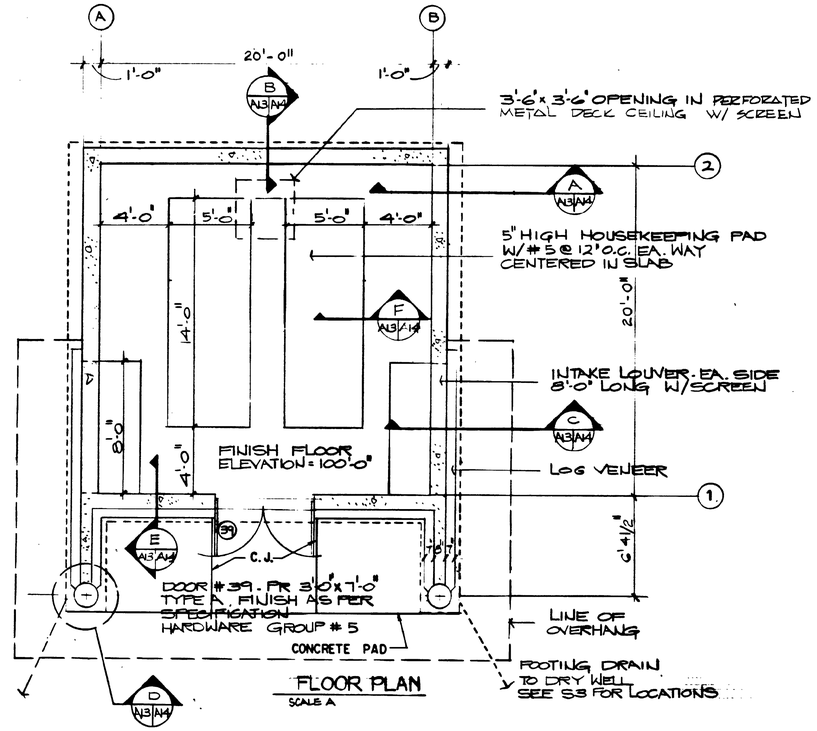

FLOOR PLAN
SCALE A

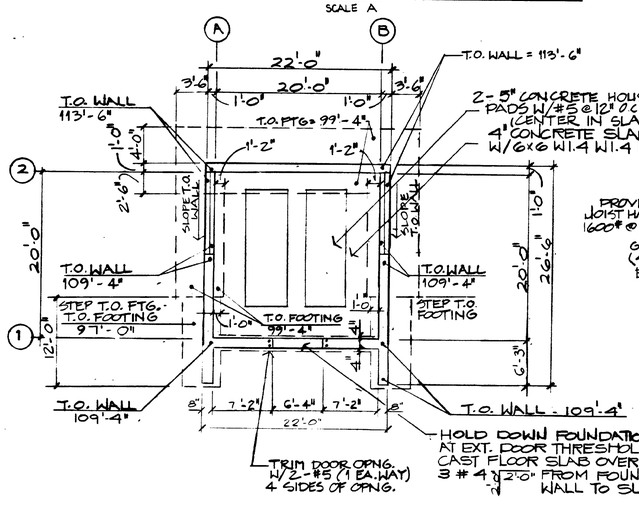

FOOTING & FOUNDATION
SCALE B

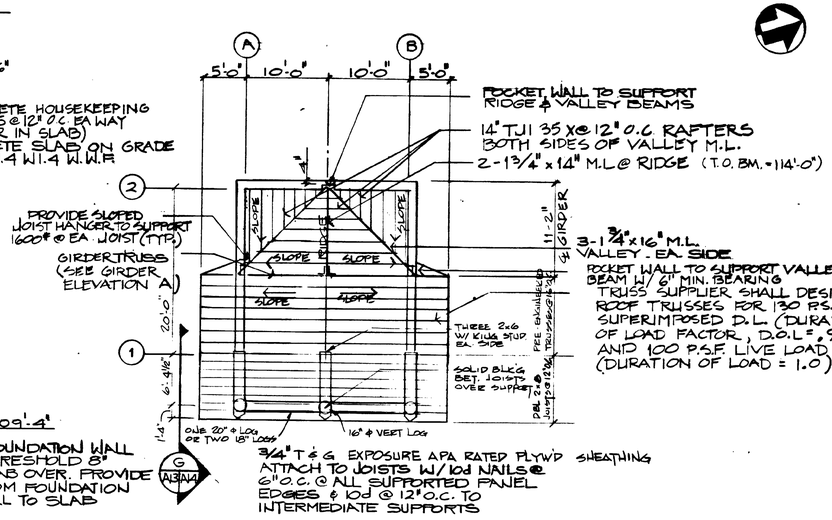

ROOF FRAMING
SCALE B

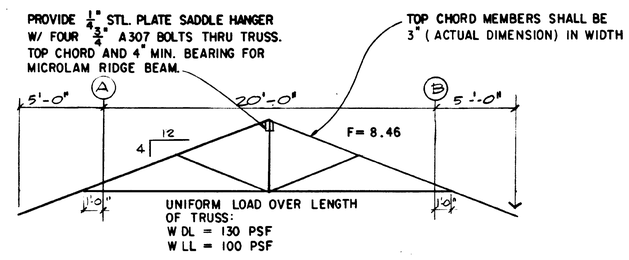

GIRDER TRUSS ELEVATION A
SCALE A

4 0 4 8
SCALE A

8 0 8 16
SCALE B

DESIGNED: CHAMBERLIN/BECK DRAWN: DW TECH. REVIEW: EJC DATE: 7/14/89	SUB SHEET NO. A-13	TITLE OF SHEET GENERATOR BUILDING ELEVATIONS FLOOR PLAN	DRAWING NO. 117 41,073B PKG. NO. GLAC DS 91 SHEET 22 OF 55

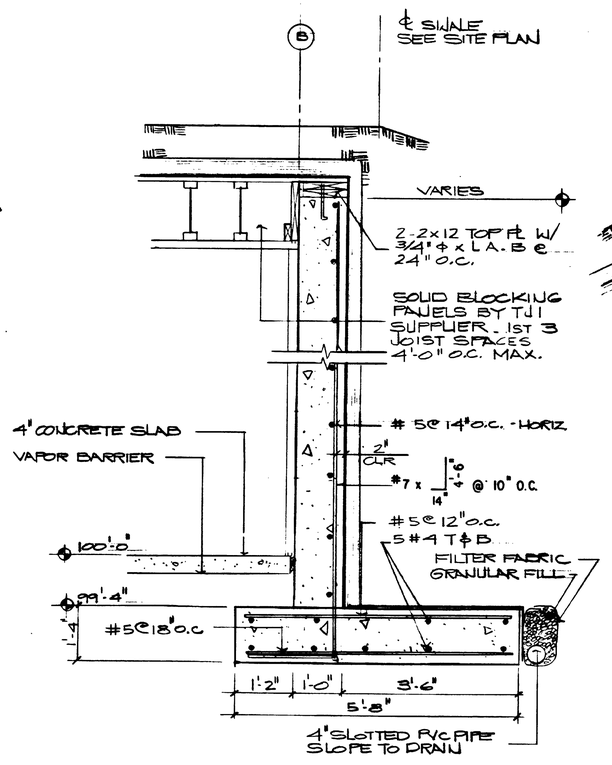

WALL SECTION
SCALE A

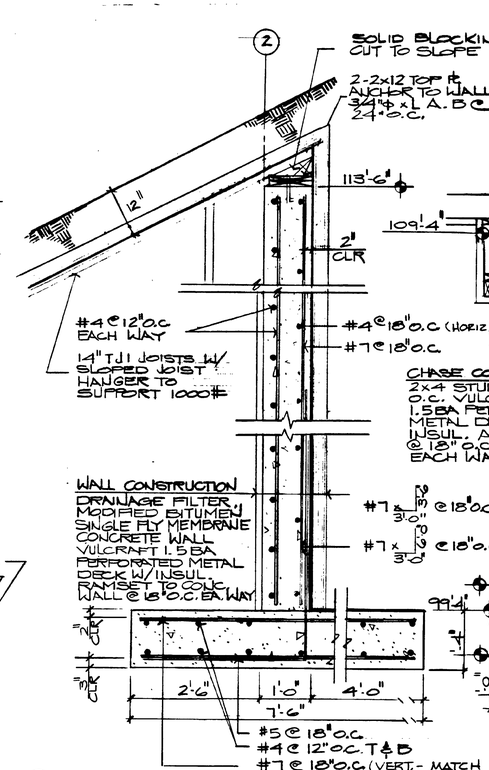

WALL SECTION
SCALE A

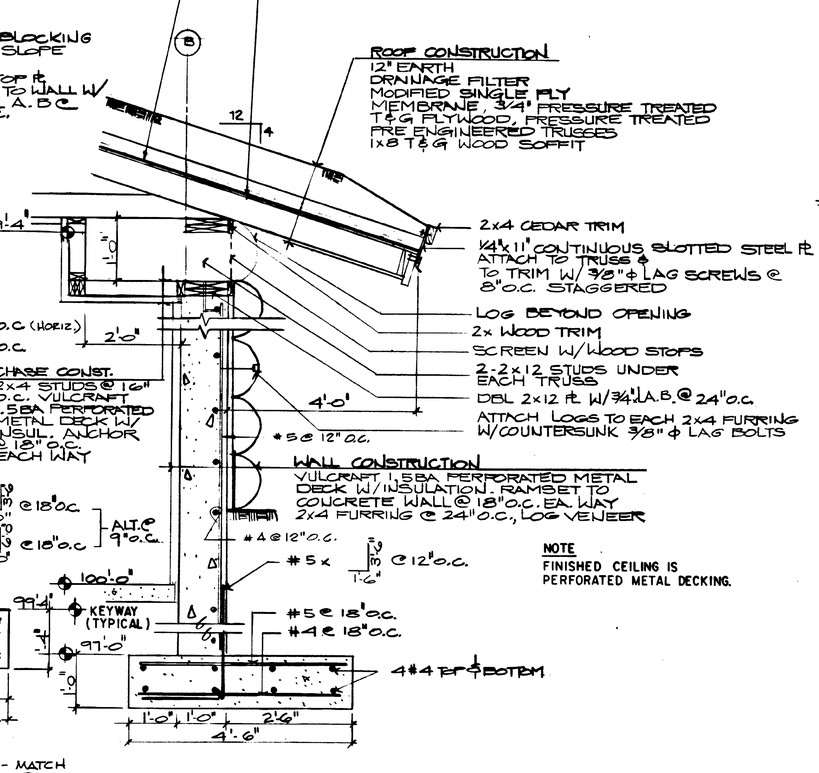

NOTE
FINISHED CEILING IS PERFORATED METAL DECKING.

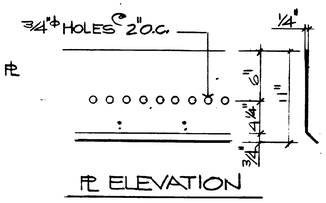

PL ELEVATION

WALL SECTION
SCALE A

WALL SECTION
SCALE A

WALL SECTION
SCALE A

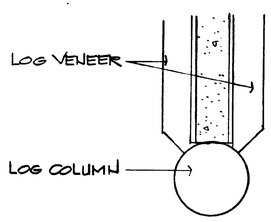

PLAN
SCALE A

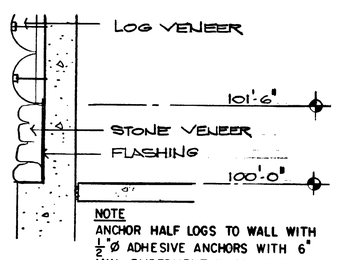

NOTE
ANCHOR HALF LOGS TO WALL WITH 1/2"Ø ADHESIVE ANCHORS WITH 6" MIN. EMBEDMENT IN CONCRETE.

WALL SECTION
SCALE A

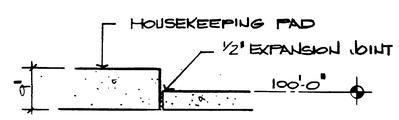

FLOOR DETAIL
SCALE A

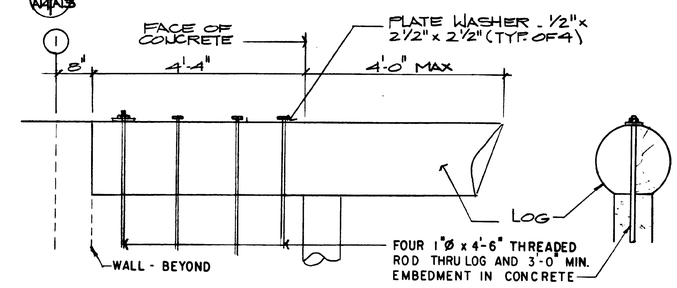

LOG CONNECTION
SCALE A

1 0 1 2 3
SCALE A

DESIGNED: CHAMBERLIN	SUB SHEET NO.	TITLE OF SHEET	DRAWING NO. 117 41,073B
DRAWN: KO	A-14	GENERATOR BLDG ·WALL SECTIONS	PKG. NO. GLAC 05 91
TECH. REVIEW: EJC			SHEET 23 OF 55
DATE: 7/14/89			

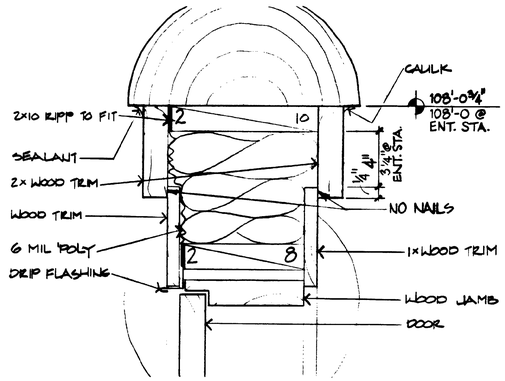

HEAD @ DOOR (A/A15)
SCALE A

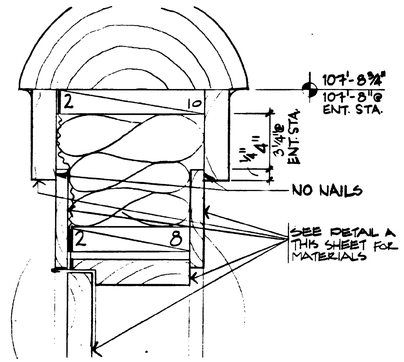

HEAD @ DOOR (B/A15)
SCALE A

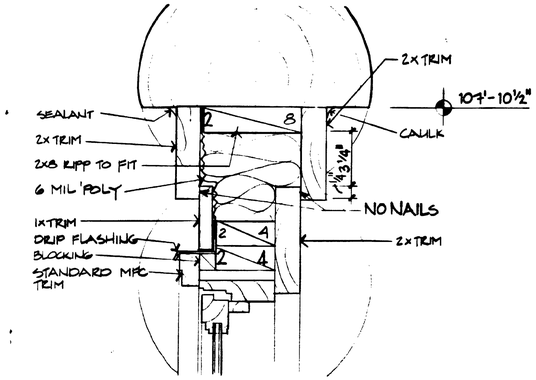

HEAD @ WINDOW (C/A15)
SCALE A

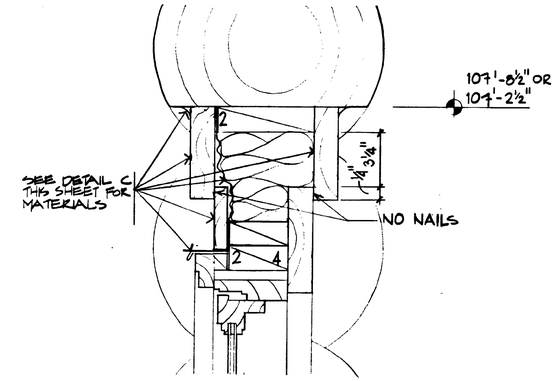

HEAD @ WINDOW (D/A15)
SCALE A

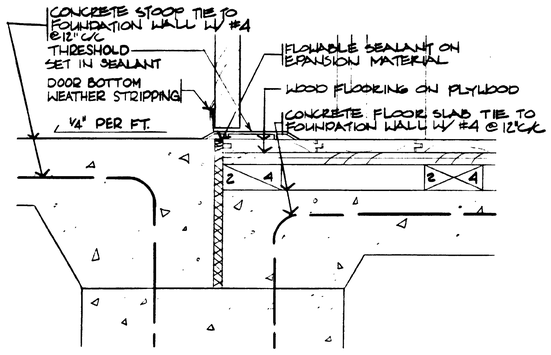

SILL @ DOOR (E/A15)
SCALE A

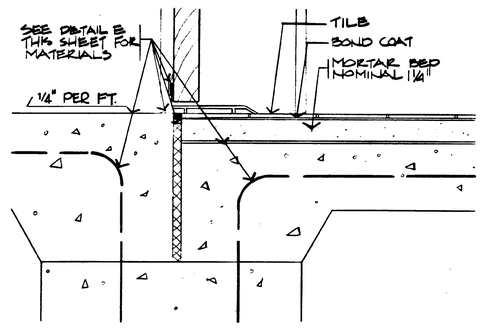

SILL @ DOOR (F/A15)
SCALE A

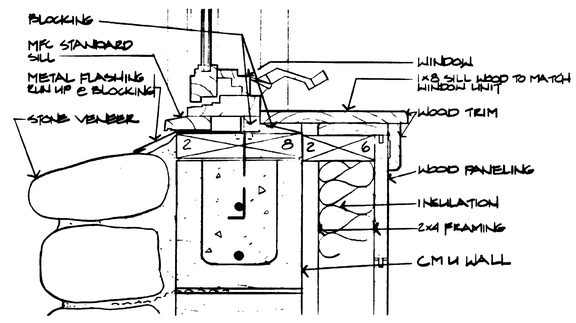

SILL @ WINDOW (G/A15)
SCALE A

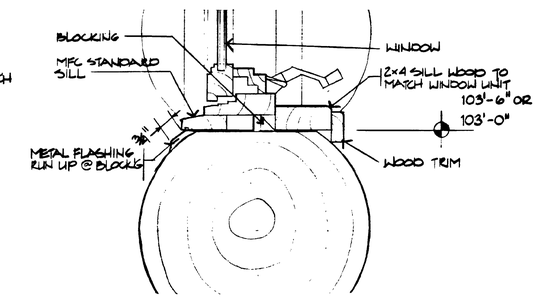

SILL @ WINDOW (H/A15)
SCALE A

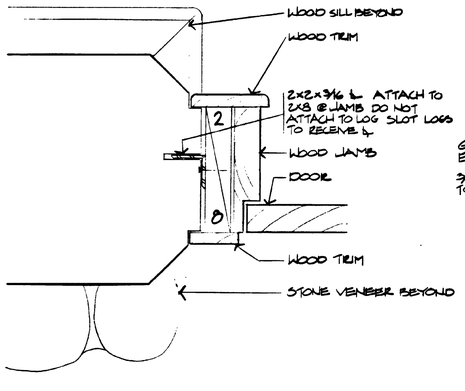

DOOR JAMB @ LOGS (J/A15)

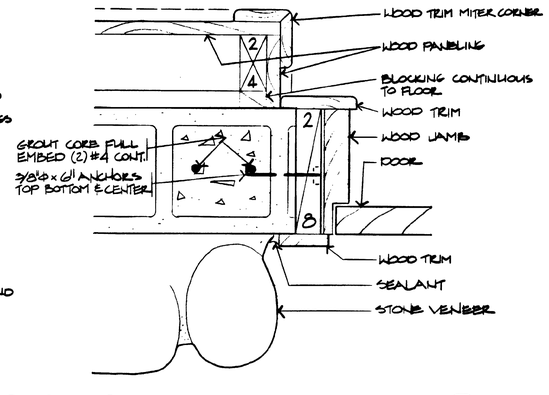

DOOR JAMB @ STONE (K/A15)
SCALE A

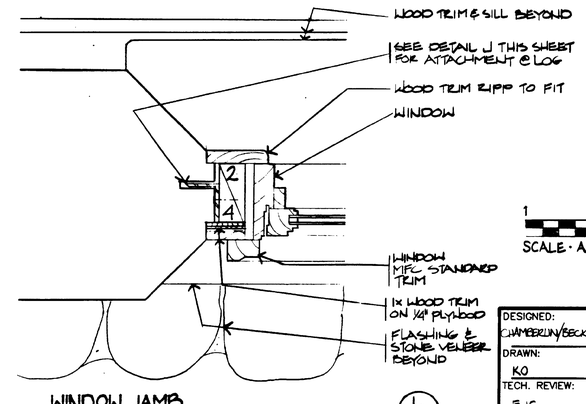

WINDOW JAMB (L/A15)
SCALE A

1 0 1
SCALE · A

DESIGNED: CHAMBERLIN/BECK DRAWN: KO TECH. REVIEW: SJC DATE: 7/14/89	SUB SHEET NO. A-15	TITLE OF SHEET **DETAILS** **·DOOR** **·WINDOW**	DRAWING NO. 117 / 41,073B PKG. NO. GLAC DS 91 SHEET 24 OF 55

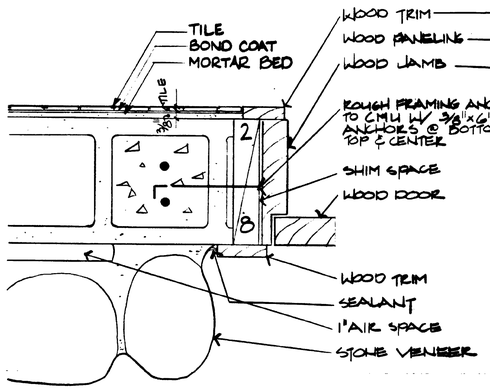

JAMB @ TOILET (A/A16)
SCALE A

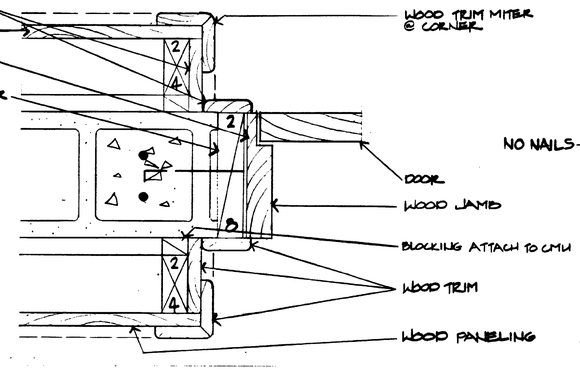

JAMB @ INTERIOR UNDER LOG WALL (B/A16)
SCALE A

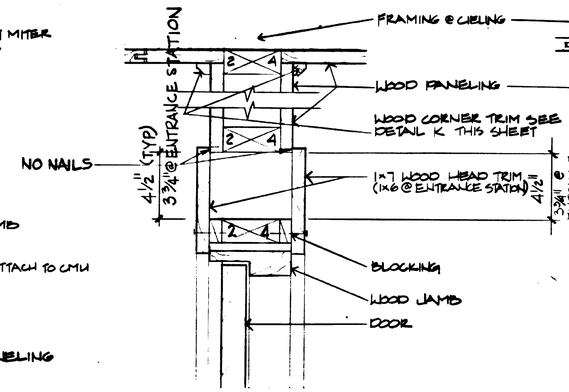

HEAD @ INTERIOR DOOR (C/A16)
SCALE A

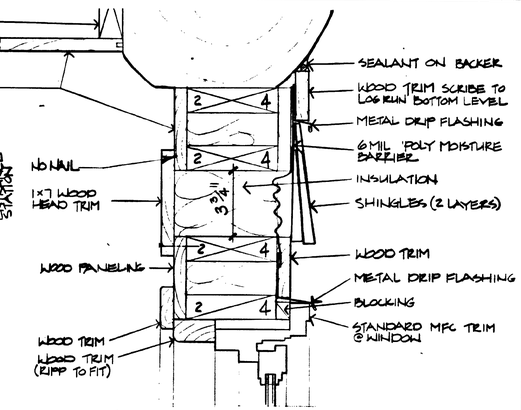

HEAD @ WINDOW (D/A16)
SCALE A

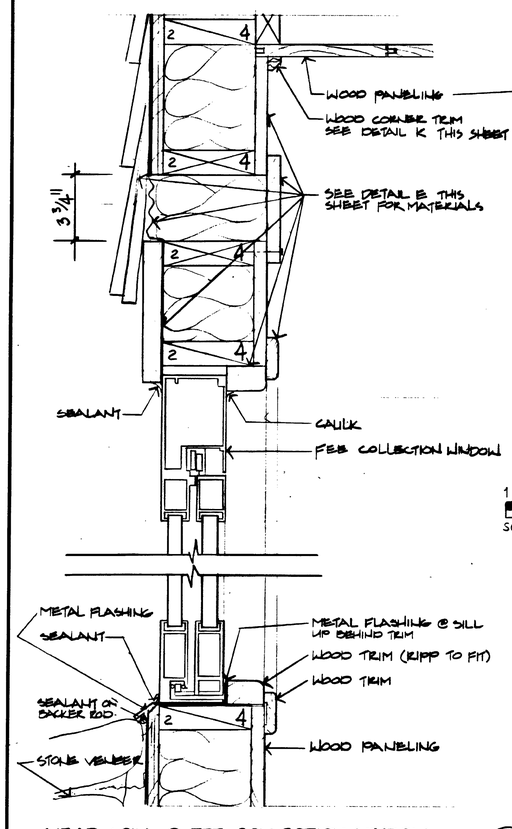

HEAD & SILL @ FEE COLLECTION WINDOW (J/A16)
SCALE A

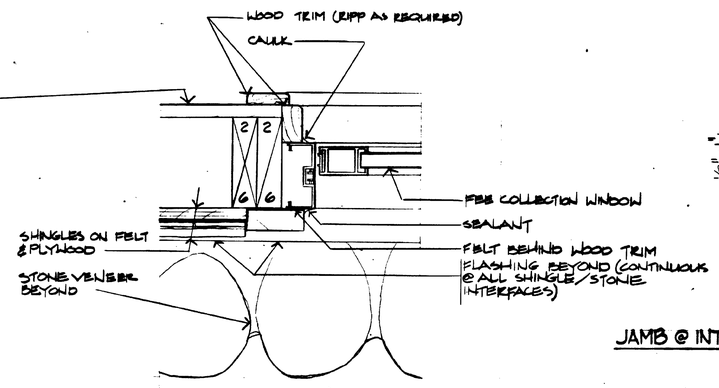

JAMB @ FEE COLLECTION WINDOW (H/A16)
SCALE A

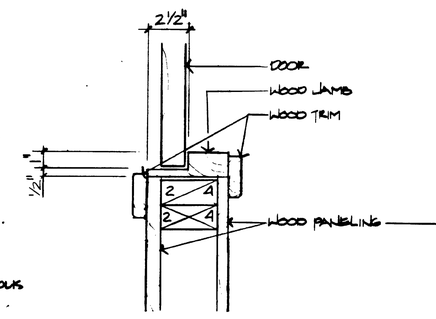

JAMB @ INTERIOR DOOR (G/A16)

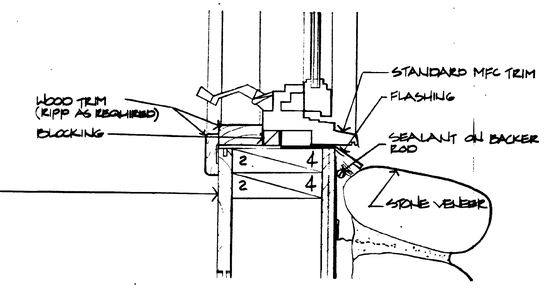

SILL @ WINDOW (E/A16)
SCALE A

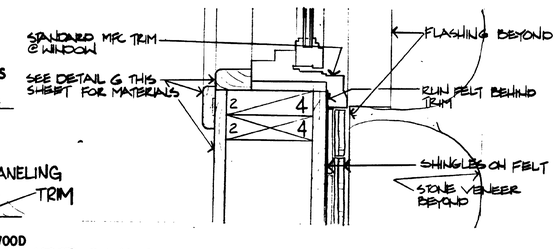

JAMB @ WINDOW (F/A16)
SCALE A

1 0 1
SCALE A

1 0 1 2 3
SCALE: B

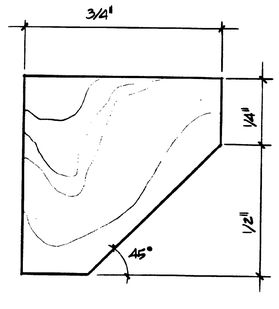

CORNER TRIM DETAIL (K/A16)
NTS

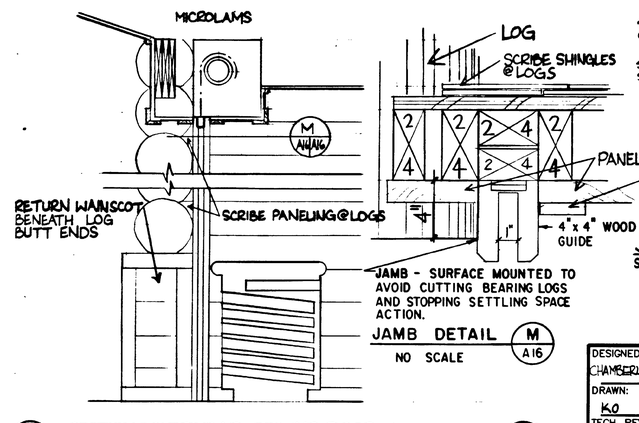

JAMB DETAIL (M/A16)
NO SCALE

SECTION @ OVERHEAD COILING DOOR (L/A1/A16)
SCALE: B

DESIGNED: CHAMBERLIN/BECK DRAWN: KO TECH. REVIEW: EJC DATE: 7/14/09	SUB SHEET NO. A-16	TITLE OF SHEET **DETAILS** **·DOOR** **·WINDOW**	DRAWING NO. 117 41,073B PKG. NO. GLAC DS 91 SHEET 25 OF 55

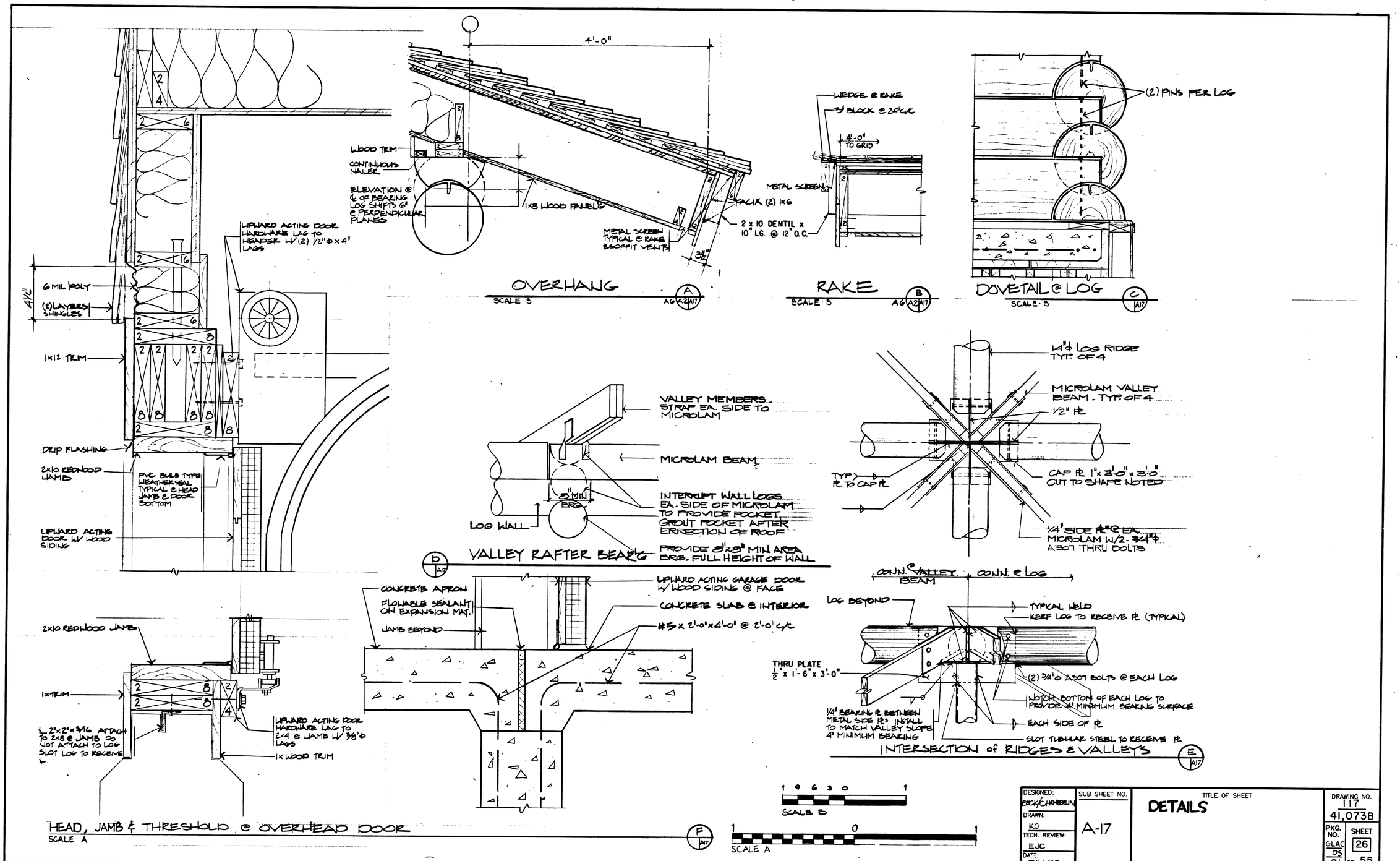

DESIGNED:	SUB SHEET NO.	TITLE OF SHEET	DRAWING NO.
BECK/CHAMBERLIN	A-17	DETAILS	117
DRAWN: KO			41,073B
TECH. REVIEW: EJC			PKG. NO. GLAC DS 91
DATE: 7/14/89			SHEET 26 OF 55

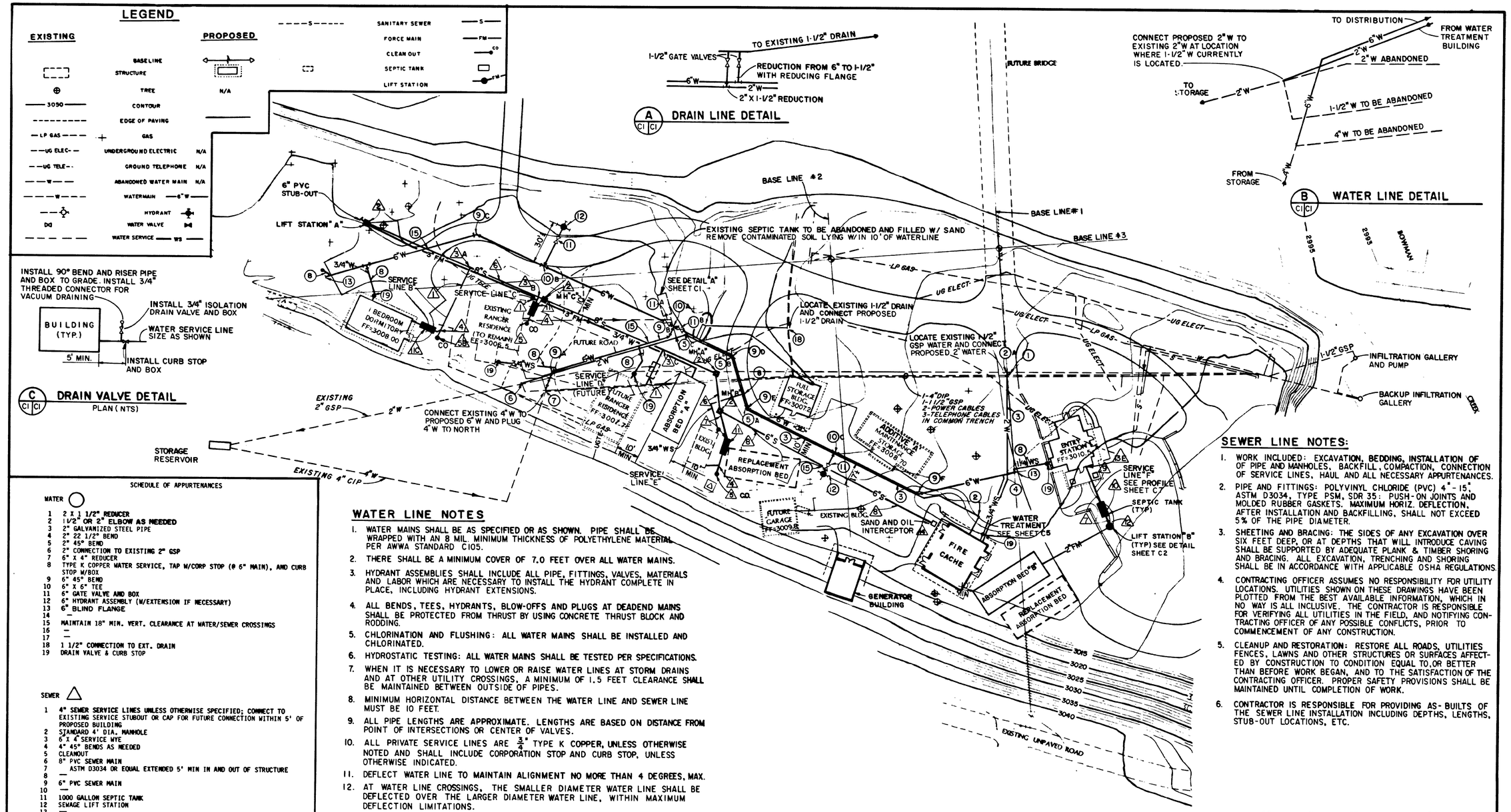

SCHEDULE OF APPURTENANCES

WATER

1 2 X 1 1/2" REDUCER
2 1 1/2" OR 2" ELBOW AS NEEDED
3 2" GALVANIZED STEEL PIPE
4 2" 22 1/2" BEND
5 2" 45° BEND
6 2" CONNECTION TO EXISTING 2" GSP
7 6" X 4" REDUCER
8 TYPE K COPPER WATER SERVICE, TAP W/CORP STOP (@ 6" MAIN), AND CURB STOP W/BOX
9 6" 45° BEND
10 6" X 6" TEE
11 6" GATE VALVE AND BOX
12 6" HYDRANT ASSEMBLY (W/EXTENSION IF NECESSARY)
13 6" BLIND FLANGE
14 —
15 MAINTAIN 18" MIN. VERT. CLEARANCE AT WATER/SEWER CROSSINGS
16 —
17 —
18 1 1/2" CONNECTION TO EXT. DRAIN
19 DRAIN VALVE & CURB STOP

SEWER

1 4" SEWER SERVICE LINES UNLESS OTHERWISE SPECIFIED; CONNECT TO EXISTING SERVICE STUBOUT OR CAP FOR FUTURE CONNECTION WITHIN 5' OF PROPOSED BUILDING
2 STANDARD 4' DIA. MANHOLE
3 6" X 4" SERVICE WYE
4 4" 45° BENDS AS NEEDED
5 CLEANOUT
6 8" PVC SEWER MAIN
7 ASTM D3034 OR EQUAL EXTENDED 5' MIN IN AND OUT OF STRUCTURE
8 —
9 6" PVC SEWER MAIN
10 —
11 1000 GALLON SEPTIC TANK
12 SEWAGE LIFT STATION
13 —
14 SAND AND OIL INTERCEPTOR

WATER LINE NOTES

1. WATER MAINS SHALL BE AS SPECIFIED OR AS SHOWN. PIPE SHALL BE WRAPPED WITH AN 8 MIL. MINIMUM THICKNESS OF POLYETHYLENE MATERIAL PER AWWA STANDARD C105.
2. THERE SHALL BE A MINIMUM COVER OF 7.0 FEET OVER ALL WATER MAINS.
3. HYDRANT ASSEMBLIES SHALL INCLUDE ALL PIPE, FITTINGS, VALVES, MATERIALS AND LABOR WHICH ARE NECESSARY TO INSTALL THE HYDRANT COMPLETE IN PLACE, INCLUDING HYDRANT EXTENSIONS.
4. ALL BENDS, TEES, HYDRANTS, BLOW-OFFS AND PLUGS AT DEADEND MAINS SHALL BE PROTECTED FROM THRUST BY USING CONCRETE THRUST BLOCK AND RODDING.
5. CHLORINATION AND FLUSHING: ALL WATER MAINS SHALL BE INSTALLED AND CHLORINATED.
6. HYDROSTATIC TESTING: ALL WATER MAINS SHALL BE TESTED PER SPECIFICATIONS.
7. WHEN IT IS NECESSARY TO LOWER OR RAISE WATER LINES AT STORM DRAINS AND AT OTHER UTILITY CROSSINGS, A MINIMUM OF 1.5 FEET CLEARANCE SHALL BE MAINTAINED BETWEEN OUTSIDE OF PIPES.
8. MINIMUM HORIZONTAL DISTANCE BETWEEN THE WATER LINE AND SEWER LINE MUST BE 10 FEET.
9. ALL PIPE LENGTHS ARE APPROXIMATE. LENGTHS ARE BASED ON DISTANCE FROM POINT OF INTERSECTIONS OR CENTER OF VALVES.
10. ALL PRIVATE SERVICE LINES ARE $\frac{3}{4}$" TYPE K COPPER, UNLESS OTHERWISE NOTED AND SHALL INCLUDE CORPORATION STOP AND CURB STOP, UNLESS OTHERWISE INDICATED.
11. DEFLECT WATER LINE TO MAINTAIN ALIGNMENT NO MORE THAN 4 DEGREES, MAX.
12. AT WATER LINE CROSSINGS, THE SMALLER DIAMETER WATER LINE SHALL BE DEFLECTED OVER THE LARGER DIAMETER WATER LINE, WITHIN MAXIMUM DEFLECTION LIMITATIONS.

SEWER LINE NOTES:

1. WORK INCLUDED: EXCAVATION, BEDDING, INSTALLATION OF OF PIPE AND MANHOLES, BACKFILL, COMPACTION, CONNECTION OF SERVICE LINES, HAUL AND ALL NECESSARY APPURTENANCES.
2. PIPE AND FITTINGS: POLYVINYL CHLORIDE (PVC) 4"-15", ASTM D3034, TYPE PSM, SDR 35: PUSH-ON JOINTS AND MOLDED RUBBER GASKETS. MAXIMUM HORIZ. DEFLECTION, AFTER INSTALLATION AND BACKFILLING, SHALL NOT EXCEED 5% OF THE PIPE DIAMETER.
3. SHEETING AND BRACING: THE SIDES OF ANY EXCAVATION OVER SIX FEET DEEP, OR AT DEPTHS THAT WILL INTRODUCE CAVING SHALL BE SUPPORTED BY ADEQUATE PLANK & TIMBER SHORING AND BRACING. ALL EXCAVATION, TRENCHING AND SHORING SHALL BE IN ACCORDANCE WITH APPLICABLE OSHA REGULATIONS.
4. CONTRACTING OFFICER ASSUMES NO RESPONSIBILITY FOR UTILITY LOCATIONS. UTILITIES SHOWN ON THESE DRAWINGS HAVE BEEN PLOTTED FROM THE BEST AVAILABLE INFORMATION, WHICH IN NO WAY IS ALL INCLUSIVE. THE CONTRACTOR IS RESPONSIBLE FOR VERIFYING ALL UTILITIES IN THE FIELD, AND NOTIFYING CONTRACTING OFFICER OF ANY POSSIBLE CONFLICTS, PRIOR TO COMMENCEMENT OF ANY CONSTRUCTION.
5. CLEANUP AND RESTORATION: RESTORE ALL ROADS, UTILITIES FENCES, LAWNS AND OTHER STRUCTURES OR SURFACES AFFECTED BY CONSTRUCTION TO CONDITION EQUAL TO, OR BETTER THAN BEFORE WORK BEGAN, AND TO THE SATISFACTION OF THE CONTRACTING OFFICER. PROPER SAFETY PROVISIONS SHALL BE MAINTAINED UNTIL COMPLETION OF WORK.
6. CONTRACTOR IS RESPONSIBLE FOR PROVIDING AS-BUILTS OF THE SEWER LINE INSTALLATION INCLUDING DEPTHS, LENGTHS, STUB-OUT LOCATIONS, ETC.

ALL SITE CIVIL WORK ON SUBSHEETS C1-C7 IS BASE BID, EXCEPT AS NOTED AS ADDITIVE 'A' AND ADDITIVE 'B'.

NOTE

SEE SUB SHEET C8 FOR PLAN AND PROFILE, AND DETAILS.

DESIGNED: M/M DRAWN: I.M. TECH. REVIEW: DATE: 7/14/89	SUB SHEET NO. C1	TITLE OF SHEET POLEBRIDGE DEVELOPMENT WATER AND SEWER PLAN	DRAWING NO. 117 / 41073B PKG. NO. DS 91 SHEET 27 OF 55

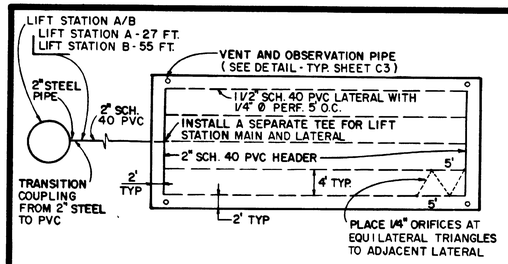

PLAN

PRESSURE DISTRIBUTION ABSORPTION BED

SCALE 1" = 10'

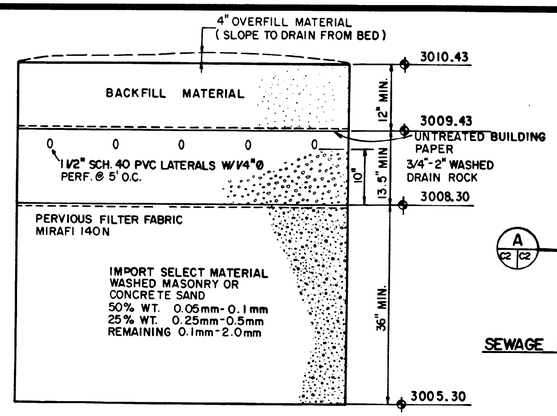

SAND LINED ABSORPTION BED

CROSS-SECTION
SCALE: HORIZ. 1/4" = 1'
VERT. 1" = 1'

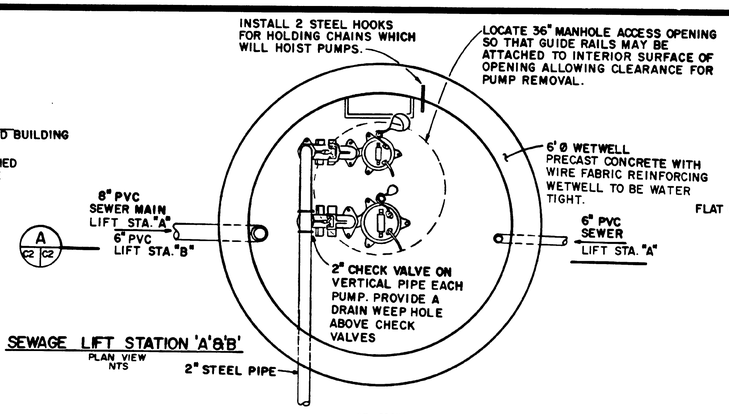

SEWAGE LIFT STATION 'A'&'B'

PLAN VIEW
NTS

LIFT STATION LEVEL SETTINGS

	Lift Station "A"	Lift Station "B"
Top of Rim	3005.5	3010.5
Bottom of MH (Inside)	2990.6	3000.5
HWL Alarm	2995.0	3004.9
DVSJU Extraordinary Level	2994.8	3004.7
DVSAU Start	2994.5	3004.3
DVSJU Start	2994.2	3004.0
DVSAU LWL	2991.3	3001.1
DVSJU LWL	2991.2	3001.0
8" PVC Main Inlet	2995.6	-
6" PVC Main Inlet	2999.3	3005.46
2" PVC Outlet	3000.0	3005.0

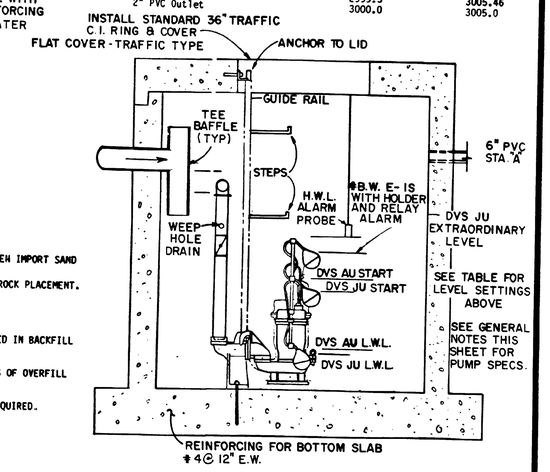

6' Ø LIFT STATION "A" & "B" SUMP DETAIL (TYP.) A/C2

NTS

GENERAL NOTES

1. PROVIDE AND INSTALL, IN ACCORDANCE WITH MANUFACTURER'S RECOMMENDATIONS, EBARA #50 DVSAU 6.75S2 AND #50 DVSJU 6.75S2 SEMI-VORTEX SUMP PUMPS WITH QUICK DISCHARGE CONNECTORS AND AUTOMATIC HIGH WATER ALARMS. PUMPS WILL HANDLE A MINIMUM OF 3/4" DIAMETER SOLIDS. PUMPS SHALL BE SINGLE PHASE, 240V, 3450 RPM, WITH MOTORS TO BE 1 HP.
2. PROVIDE A 6' DIAMETER WATERTIGHT CONCRETE WETWELL WITH FLAT TOP AND 36" ACCESS.
3. GROUT AND SEAL ALL OPENINGS IN WETWELL WALLS TO ENSURE WATERTIGHT CONDITIONS.
4. PROVIDE 2" THREADED STEEL PIPE AND FITTINGS IN WETWELL TO TRANSITION OUTSIDE WETWELL AS SHOWN.
5. PROVIDE 2" SCH 40 PVC PIPE AS SHOWN.
6. PROVIDE AND INSTALL 2" SWING-WEIGHTED CHECK VALVES ON EACH VERTICAL PUMP LINE.
7. PROVIDE CONCRETE THRUST RESTRAINTS ON ALL DIRECTION CHANGES IN PIPE.
8. SEPTIC TANK MANHOLES AND LIFT STATIONS TO ADHERE TO ALL APPLICABLE STATE AND COUNTY REGULATIONS REGARDING SEWAGE DISPOSAL SYSTEM CRITERIA.
9. PROVIDE FIVE FEET MINIMUM OF SCH 40 PVC OR EQUIVALENT STRENGTH PIPE FROM INLET AND OUTLET OF SEPTIC TANK AND LIFT STATIONS.
10. PROVIDE CLEAN OUTS FOR BENDS GREATER THAN 45 DEGREES. (SEE CLEANOUT DETAIL.)
11. ABSORPTION BED DISTRIBUTION LINES TO BE LEVEL.
12. DISTRIBUTION LINES TO BE TWO-INCH SCH 40 PERFORATED PVC WITH PERFORATIONS AT 5' ON CENTER.
13. CLEAN GRADED ROCK FOR ABSORPTION SYSTEM TO BE 3/4" TO 2".
14. ROCK TO BE COVERED WITH UNTREATED BUILDING PAPER, TWO-INCH MINIMUM LAYER OF STRAW. HAY OR SIMILAR PERVIOUS MATERIAL.
15. PROVIDE PERVIOUS MATERIAL SUCH AS MIRAFI 140N BETWEEN IMPORT SAND FILL AND ROCK.
16. INSTALL MINIMUM 36-INCH IMPORT SAND MATERIAL BELOW ROCK PLACEMENT.
    MAXIMUM 50% BY WEIGHT 0.1 -0.5 MM
    25% BY WEIGHT 0.25-0.5 MM
    25% BY WEIGHT 0.1 -2.0 MM
17. NO ROCK LARGER THAN SIX INCHES DIAMETER SHALL BE USED IN BACKFILL MATERIAL.
18. ABSORPTION BED TO BE COVERED WITH FOUR TO SIX INCHES OF OVERFILL MATERIAL TO DEFLECT RUNOFF WATER.
19. ELEVATIONS TO BE FIELD DETERMINED BASED ON SLOPES REQUIRED.

NOTE
SEE SHEETS C3 AND C8 FOR PROFILES.

DESIGNED M/M	SUB SHEET NO	TITLE OF SHEET	DRAWING NO 117 41073B
DRAWN I.M.	C2	SEWER PROFILES AND DETAILS	PKG. NO. DS 91
TECH REVIEW.			SHEET 28 OF 55
DATE: 7/14/89			

NOTES:

1. 22 1/2° LONG RADIUS BEND
2. SEWER LINE
3. FOR SEWER SERVICE TAPS TO EXISTING LINES USE A 45° WYE SADDLE
4. "PERMA - JOINT" STOP OR EQUAL. 6' STEEL FENCE POST AT END OF LINE TO ABOVE GROUND.
5. 1'-0" OR AS STAKED IN FIELD
6. SERVICE LINE. SEE SPECIFICATIONS. GRADE 1/4" DROP PER FOOT MIN.
7. CENTER OF WYE BRANCH TO BE PLACED IN UPPER THIRD OF SEWER MAIN

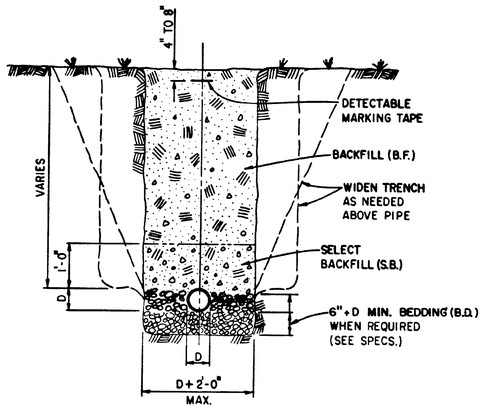

A C1 C3 TRENCH DETAIL
SINGLE PIPE, NON-TRAFFIC AREA
(STANDARD DETAIL-#02221)
NO SCALE

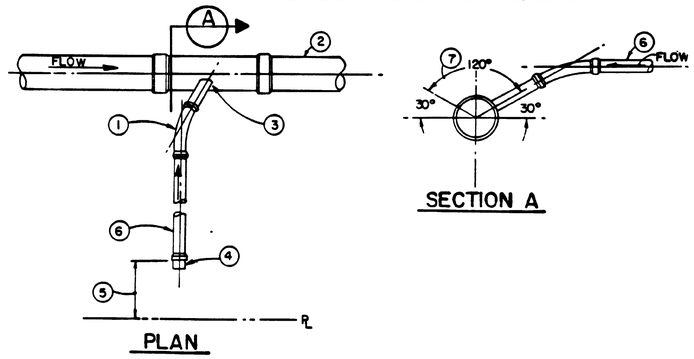

SECTION A

PLAN

B C1 C3 SEWER SERVICE CONNECTION
N. T. S.

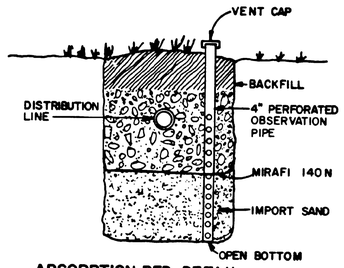

C C1 C3 ABSORPTION BED DETAIL
NO SCALE

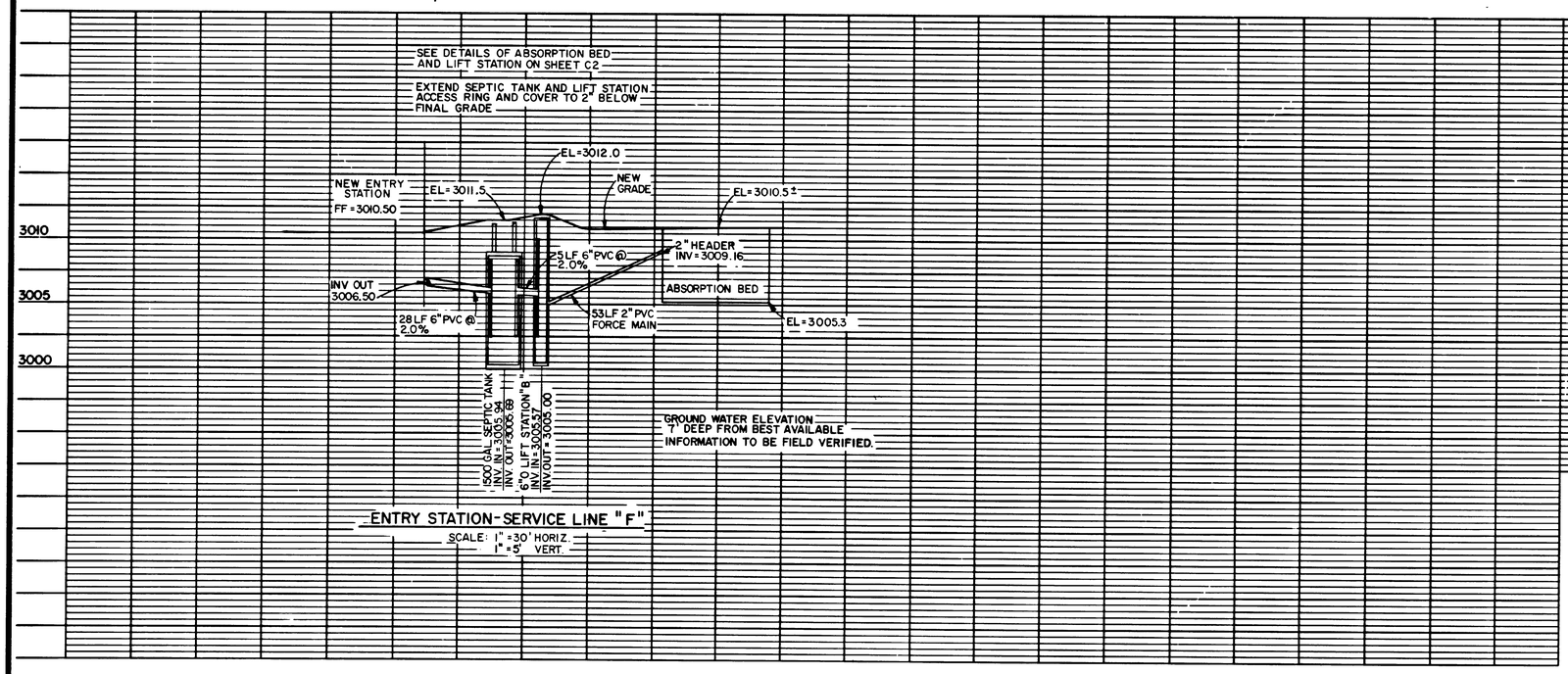

ENTRY STATION-SERVICE LINE "F"
SCALE: 1" = 30' HORIZ.
1" = 5' VERT.

NOTE: CONTRACTOR TO FIELD VERIFY ALL EXISTING UTILITY ELEVATIONS PRIOR TO STARTING CONSTRUCTION ACTIVITY.

DESIGNED: MARTIN/MARTIN	SUB. SHEET NO.	TITLE OF SHEET	DRAWING NO. 117 41,073B
DRAWN: P.D.	C3	SEWER PROFILE AND MISC. DETAILS	PKG NO. DS 91
TECH. REVIEW:			SHEET 29 OF 55
DATE: 7/14/89			

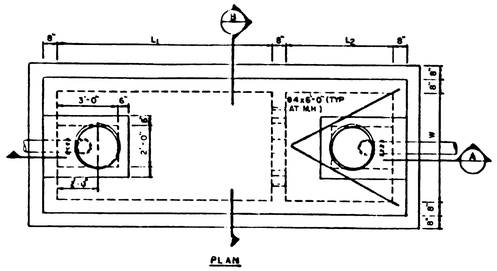

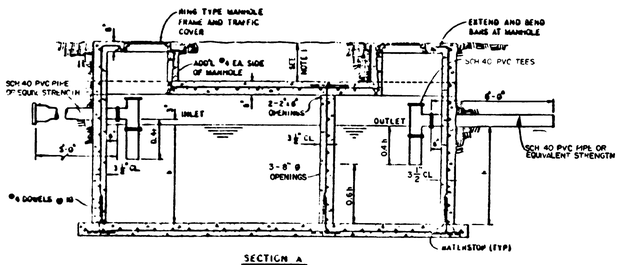

SECTION A

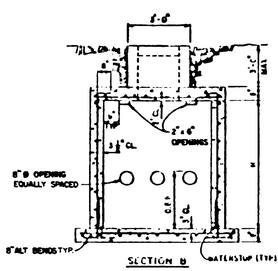

SECTION B

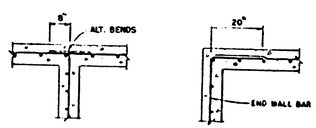

WALL INTERSECTION DETAILS

A C1 C4 SEPTIC TANK DETAILS

DIMENSION TABLE					
VOLUME GALLONS	B WIDTH	L LONG LENGTH	L SHORT LENGTH	H HEIGHT	h
750	3'-4"	6'-8"	3'-4"	4'-8"	3'-0"
1000	3'-8"	7'-0"	3'-6"	5'-2"	3'-8"
1250	3'-9"	7'-8"	3'-8"	5'-6"	4'-0"
1500	4'-0"	8'-0"	4'-0"	5'-8"	4'-2"
1750	4'-3"	8'-6"	4'-3"	5'-10"	4'-4"
2000	4'-5"	9'-0"	4'-6"	5'-11"	4'-6"
2250	4'-6"	9'-6"	4'-8"	6'-0"	4'-8"
2500	5'-0"	10'-0"	5'-0"	6'-0"	4'-8"
3000	5'-3"	10'-8"	5'-3"	6'-4"	4'-10"
3500	5'-7"	11'-2"	5'-7"	6'-6"	5'-0"
4000	6'-0"	12'-0"	6'-0"	6'-8"	5'-0"

NOTES
1. TANKS ARE DESIGNED FOR 3 FEET MAXIMUM OF 100 PCF FILL ON TOP.
2. ALL CONCRETE SHALL HAVE A MINIMUM SPECIFIED COMPRESSIVE STRENGTH AT 28 DAYS OF f'c = 4000 PSI.
3. ALL REINFORCING BARS SHALL CONFORM TO ASTM A 615 GRADE 60.
4. MINIMUM LAP LENGTH OF SPLICES SHALL BE 20 INCHES UNLESS OTHERWISE SHOWN.
5. ALL REINFORCEMENT SHALL BE #4 @ 10.

NOTES
1. SEE SPECS. FOR CAST-IN-PLACE BASE PREPARATION.
2. USING GRADE RINGS, ADJUST RING AND COVER SO BOTH ELEVATION AND SLOPE ARE 1" ABOVE GRADE IN OPEN AND GRASSED AREAS, OR FLUSH IN PAVED SURFACES.

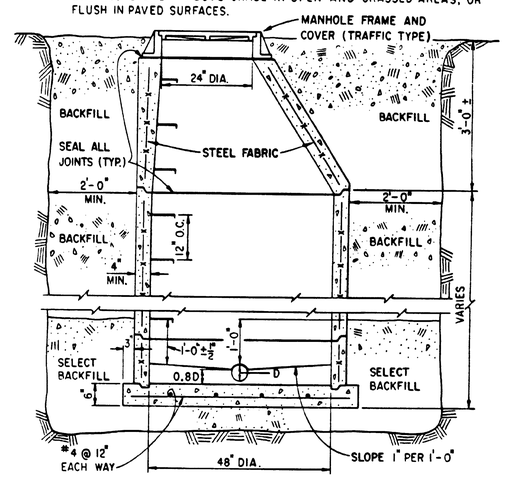

B C1 C4 PRECAST CONCRETE MANHOLE
(STANDARD DETAIL-#02605)
NO SCALE

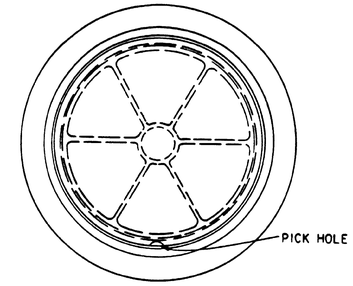

PLAN

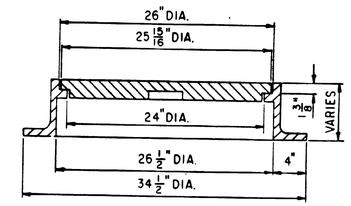

SECTION

D C1 C4 TRAFFIC TYPE MANHOLE FRAME AND COVER
(STANDARD DETAIL-#02608)
NO SCALE

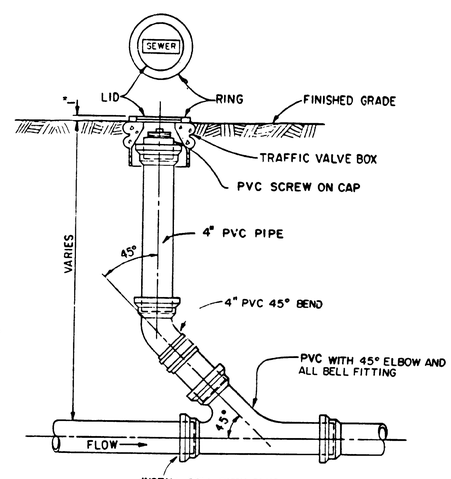

C C1 C4 SEWER LINE CLEANOUT DETAIL
(STANDARD DETAIL-#02601)
NO SCALE

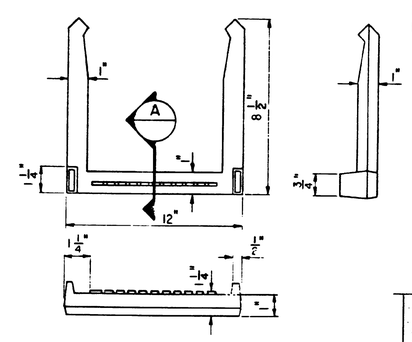

NOTE
DIMENSIONS AND BAR SIZE SHOWN ARE MINIMUMS.

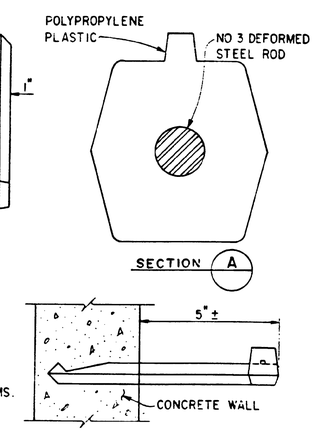

E C1 C4 MANHOLE STEP
(STANDARD DETAIL #02607)
NO SCALE

DESIGNED: M/M	SUB SHEET NO.	TITLE OF SHEET	DRAWING NO. 117 / 41073B
DRAWN: I. M.	C4	SEWER DETAILS	PKG. NO. DS 91
TECH. REVIEW:			SHEET 30 OF 55
DATE: 7/14/89			

☆ U.S. GOVERNMENT PRINTING OFFICE 675-100

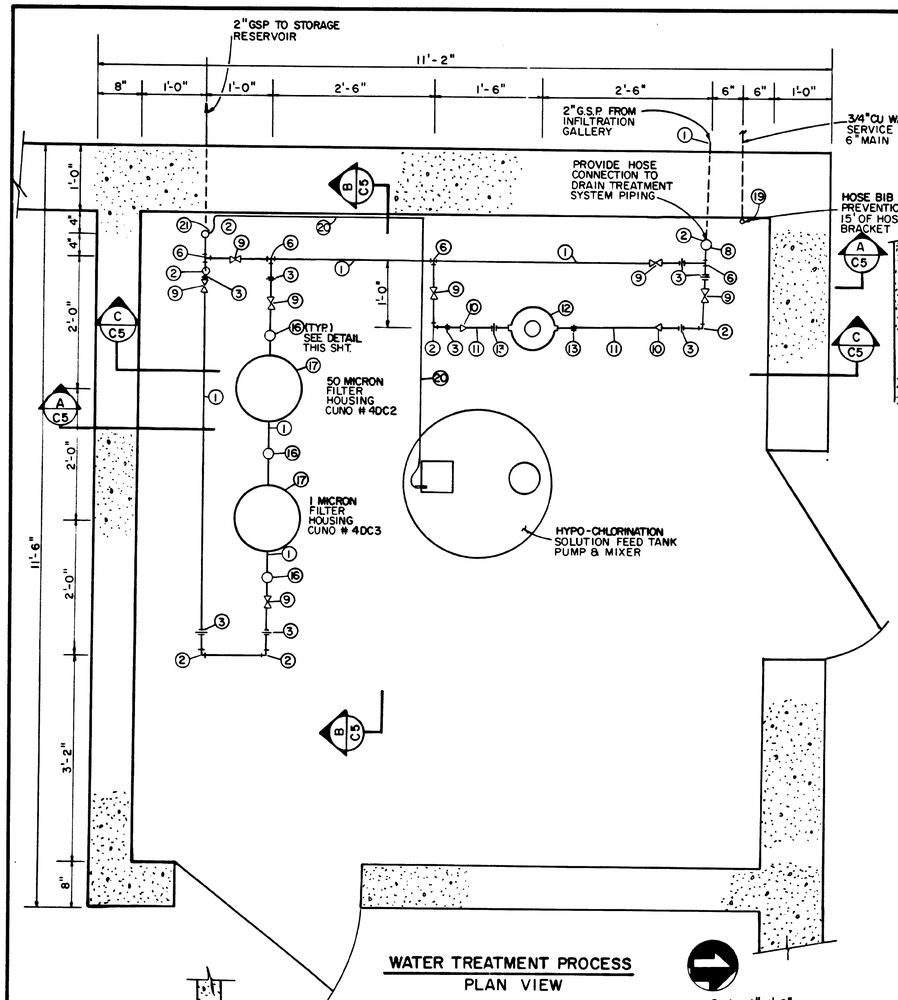

WATER TREATMENT PROCESS
PLAN VIEW

Scale : 1"= 1'-0"

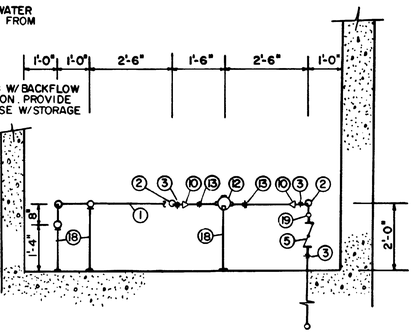

PROFILE
WATER METER DETAIL (C / C5)
Scale : 1/2"= 1'-0"

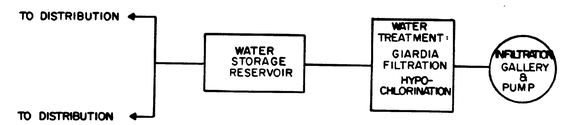

WATER SYSTEM PROCESS
FLOW DIAGRAM

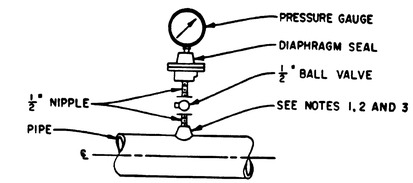

DIAPHRAGM PRESSURE GAUGE

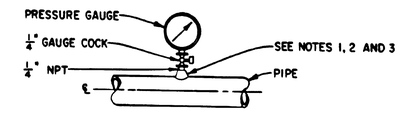

PRESSURE GAUGE

NOTES

1. FOR PIPES 2 1/2" AND SMALLER, USE A BUSHING IN A TEE.
2. FOR DI AND FRP, ALL SIZES, AND PVC 3" AND LARGER, USE PIPE SADDLE WITH BUSHING.
3. FOR STL AND SST PIPES 3" AND LARGER, AND PRESSURE VESSELS, USE THRED-O-LET AS SHOWN.
4. PROVIDE SNUBBER FOR POSITIVE DISPLACEMENT PUMP INSTALLATIONS.

(D / C5) PRESSURE GAUGE MOUNTING
(STANDARD DETAIL - # 15130)
NO SCALE

WATER TREATMENT BUILDING
SCHEDULE OF APPURTENANCES

1	2" GALV STL PIPE
2	2" 90° BEND
3	2" UNION
4	3/4" DRAIN COCK
5	2" CHECK VALVE
6	2" TEE
7	2" X 1/2" REDUCER
8	AIR RELEASE VALVE: APCO 1" NO. 50
9	2" GATE VALVE
10	2" X 1" REDUCER
11	1" GALV STL PIPE
12	1" WATER METER
13	1" UNION
14	2" X 3/4" REDUCTION
15	1" GATE VALVE
16	PRESSURE GAGE
17	CARTRIDGE FILTER
18	PIPE STAND AND SUPPORT BRACING
19	3/4" HOSE BIB AND VALVE CONNECTION
20	1/2" FLEXIBLE TUBING
21	1/2" CHLORINE INJECTOR ASSEMBLY (NPT)

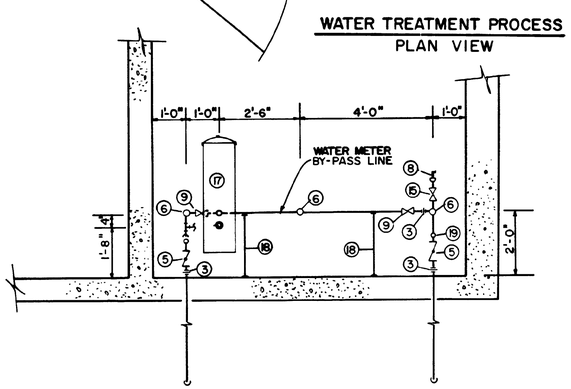

SECTION (A / C5)
Scale : 1/2"= 1'-0"

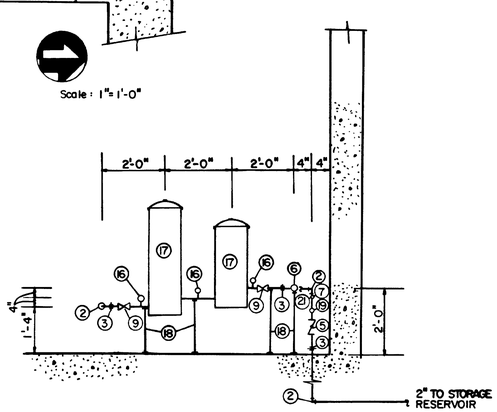

SECTION (B / C5)
Scale : 1/2"= 1'-0"

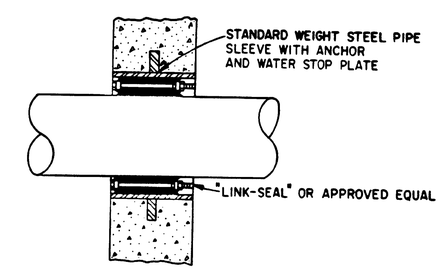

(E / C5) WALL PENETRATION DETAIL
(STANDARD DETAIL # 15120)
NO SCALE

DESIGNED: M/M DRAWN: I.M. TECH. REVIEW: DATE: 7/14/89	SUB SHEET NO. C5	TITLE OF SHEET WATER TREATMENT AND DETAILS	DRAWING NO. 117 41073B PKG. NO. DS 91 SHEET 31 OF 55

U.S. GOVERNMENT PRINTING OFFICE: 675-100

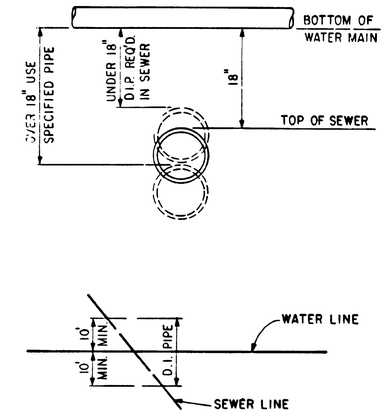

A CI|C6 CROSSING OF WATER AND SEWER LINES
(STANDARD DETAIL-#02225)
NO SCALE

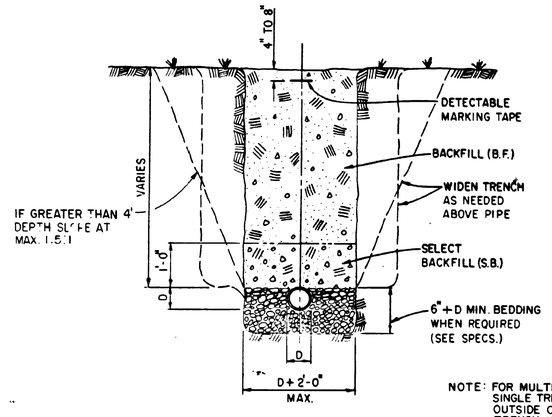

NOTE: FOR MULTIPLE PIPES IN A SINGLE TRENCH PROVIDE 1' OUTSIDE OUTER MOST PIPE TRENCH WALL AND 1' CLEARSPACE BETWEEN OUTSIDE WALLS OF PIPES. BEDDING SHALL BE ADEQUATELY COMPACT BENEATH AND AROUND ALL PIPES.

B CI|C6 TRENCH DETAIL
SINGLE PIPE, NON-TRAFFIC AREA
(STANDARD DETAIL-#02221)
NO SCALE

BASIC DATA: STD-U145A

TABLE I
THRUST (T) AT FITTINGS, IN POUNDS AT 100 P.S.I. WATER PRESSURE

PIPE SIZE	TEE OR DEAD END	90° BEND	45° BEND	22½° BEND	11¼° BEND
1½"	284	401	217	111	56
2"	443	627	339	173	87
2½"	649	918	497	253	127
3"	962	1361	736	375	189
4"	1810	2559	1385	706	355
6"	3739	5288	2862	1459	733
8"	6433	9097	4923	2510	1261
10"	9677	13685	7406	3776	1897
12"	13685	19353	10474	5340	2683
14"	18385	26001	14072	7174	3604
16"	23779	33628	18199	9278	4661

TABLE II
SAFE BEARING LOADS (B)

SOIL	SAFE BEARING LOAD, POUNDS PER SQ. FT.
SOUND SHALE	10000
CEMENTED SAND AND GRAVEL	4000
COARSE AND FINE COMPACTED SAND	3000
MEDIUM CLAY (CAN BE SPADED)	2000
SOFT CLAY	1000
MUCK	0

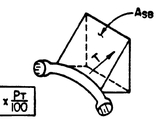

$$A_{SB} = \frac{T}{B} \times \frac{P_T}{100}$$

WHERE:
A_{SB} = AREA OF BLOCK BEARING AGAINST UNDISTURBED TRENCH MATERIAL IN SQ. FT.
T = THRUST FACTOR FROM TABLE I IN POUNDS AT 100 P.S.I.
B = SAFE BEARING LOAD FROM TABLE II IN POUNDS/SQ. FT.
P_T = PRESSURE USED FOR PIPELINE TEST IN P.S.I.

C CI|C6 THRUST BLOCK SIZING
(STANDARD DETAIL-02223)

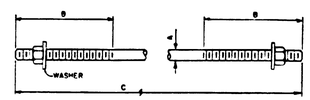

TIE ROD DETAIL

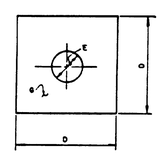

WASHER DETAIL

TIE RODS

A	B	C	
ROD DIAMETER	THREAD LENGTH	ROD LENGTH	GRADE
3/4"-1"	6"	1' TO 11'-8" 20'	MS
3/4"-1 1/2"	All Thread	1' TO 11'-8" 20'	HS

WASHERS

D	E	G
WIDTH	HOLE DIAMETER	THICKNESS
5"	1/8" Larger than Rod Ø	1/2"
6"	1/8" Larger than Rod Ø	5/8"

NOTE:
1. SEE TIED JOINTS ROD DIMENSIONS SHEET.
2. SEE CLAMP DETAILS AND DIMENSIONS (SHEET 21) FOR PROPER PLACEMENT OF WASHERS.
3. MS = MILD STEEL
HS = HIGH STRENGTH

D CI|C6 RODDING DETAILS
NO SCALE

ROD DIAMETER, GRADE & LENGTH OF TIED PIPE

PIPE SIZE	4"			6"			8"		
FITTING	D	L	G	D	L	G	D	L	G
90° BEND, TEE, PLUG OR VALVE	3/4"	30'	M.S.	3/4"	45'	M.S.	3/4"	60'	M.S.
45° BEND	3/4"	9'	M.S.	3/4"	13'	M.S.	3/4"	18'	M.S.
22½° BEND	3/4"	1.0'	M.S.	3/4"	4'	M.S.	3/4"	5'	M.S.
11¼° BEND	—	—	—	—	—	—	3/4"	1.0'	M.S.

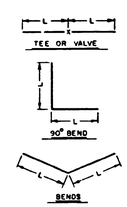

NOTES:
1- LENGTH OF TIED PIPE MEASURED EACH WAY FROM VALVES AND BENDS.
2- CLAMPS AND RODS NOT ALLOWED FOR 24" AND LARGER PIPES.
3- D = DIAMETER, L = LENTH, G = GRADE
M.S = MILD STEEL, HS = HIGH STRENGTH.
4- MINIMUM 4.5' GROUND COVER REQUIRED.
5- BASED ON 150 PSI INTERNAL PRESSURE, FOR L AND PRESSURES LISTED ON SHEET 16 OF 68 FOR D AND G.
6- M.S. MEANS MILD STEEL ROD ASTM STANDARD DESIGNATION A-36.
7- HS MEANS HIGH STRENGTH ROD A.S.T.M. STANDARD DESIGNATION A-193 GRADE B-7
8- NUTS SHALL BE ASTM STANDARD DESIGNATION A-307 GRADE A OR B HEXAGON HEAVY SERIES
9- SEE TIE ROD DETAIL DRAWING ALSO, TIE ROD COUPLING DETAILS, CLAMP DETAILS AND SET CLAMP DETAILS.
10- LENGTH REFERS TO THE AMOUNT OF PIPE WHICH MUST BE TIED TOGETHER AND IS NOT NECESSARILY THE LENGTH OF THE RODS.

DESIGNED: M/M	SUB SHEET NO.	TITLE OF SHEET	DRAWING NO. 117 41073B
DRAWN: I.M.	C6	WATER DETAILS	PKG. NO. D 91
TECH. REVIEW:			SHEET 32 OF 55
DATE: 7/14/89			

U.S. GOVERNMENT PRINTING OFFICE: 675-100

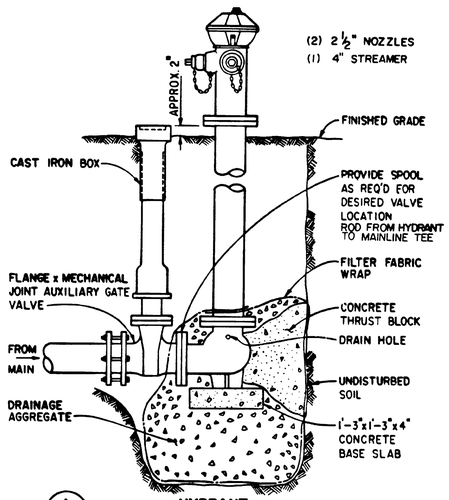

A / C1 C7 **HYDRANT**
(STANDARD DETAIL- 02644)
DRY BARREL TYPE
WITH VALVE AND BOX
NO SCALE

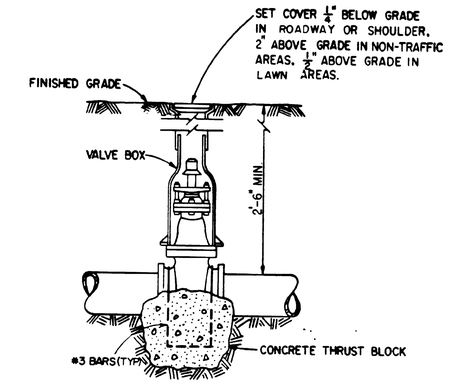

B / C1 C7 **TYPICAL GATE VALVE DETAIL**
(STANDARD DETAIL-#02642)
NO SCALE

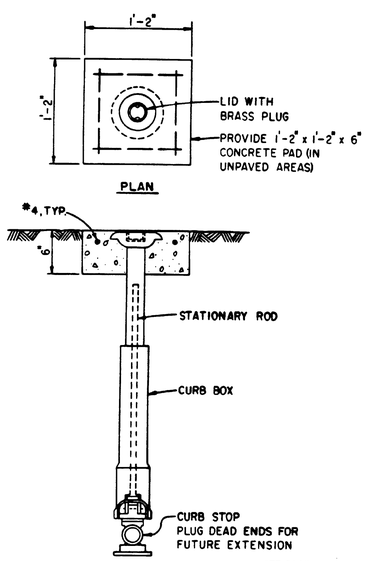

C / C1 C7 **CURB STOP AND BOX**
(STANDARD DETAIL-02643)
NO SCALE

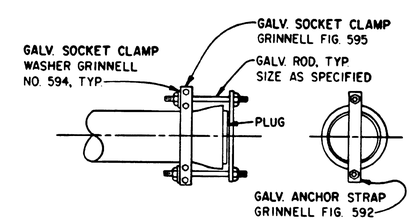

D / C1 C7 **END PLUG ANCHOR**
(STANDARD DETAIL #02226)
NO SCALE

DESIGNED: M/M	SUB SHEET NO.	TITLE OF SHEET	DRAWING NO. 117 / 41073B
DRAWN: I.M.	C7	WATER DETAILS	PKG. NO. D3 / 91 — SHEET 33 OF 55
TECH. REVIEW:			
DATE: 7/14/89			

☆ U.S. GOVERNMENT PRINTING OFFICE: 675-100

TEMPORARY BRIDGE

FUTURE BRIDGE

SLEEVE L.P. GAS LINE UNDER ROADWAY. SEE DETAIL A, SHT. M1

TWO NEW 1,000 GALLON PROPANE TANKS WITH TWO STAGE PRESSURE REGULATION. ONE STAGE AT TANKS, ONE STAGE AT BUILDINGS. SEE DETAIL C, SHEET M7. SIX CONCRETE BOLLARDS (NOT SHOWN) SURROUND TANKS

EXISTING DIESEL TANK, REMOVED BY OTHERS

EXISTING FUEL TANK, REMOVED BY OTHERS

EXISTING PROPANE TANK WITH SUPPORTS, PIPING & ACCESORIES, REMOVE, TYP. - BY OTHERS

EXISTING LP GAS LINE, PURGE WITH COMPRESSED AIR. CAP ENDS, AND ABANDON. FIELD VERIFY EXIST. PIPE TERMINATIONS. CAP EXISTING UNUSED PIPE 2'-0" BELOW GRADE.

EXISTING PROPANE TANK, REMOVED BY OTHERS

ADD NEW GAS METER AND COVER TO EXISTING REGULATOR. SEE DETAILS SHEET M9.

EXISTING LP GAS LINE, PURGE WITH COMPRESSED AIR, CAP AND ABANDON.

CONNECT NEW L.P. GAS TO EXIST. PROVIDE ADAPTOR AS REQUIRED.

NEW 2000 GAL. FUEL TANK WITH PUMP ISLAND. SEE DETAIL A SHEET M7.

NEW 2000 GAL. DIESEL TANK TO SERVICE ELECTRIC GENERATORS. SEE DETAIL B SHEET M7.

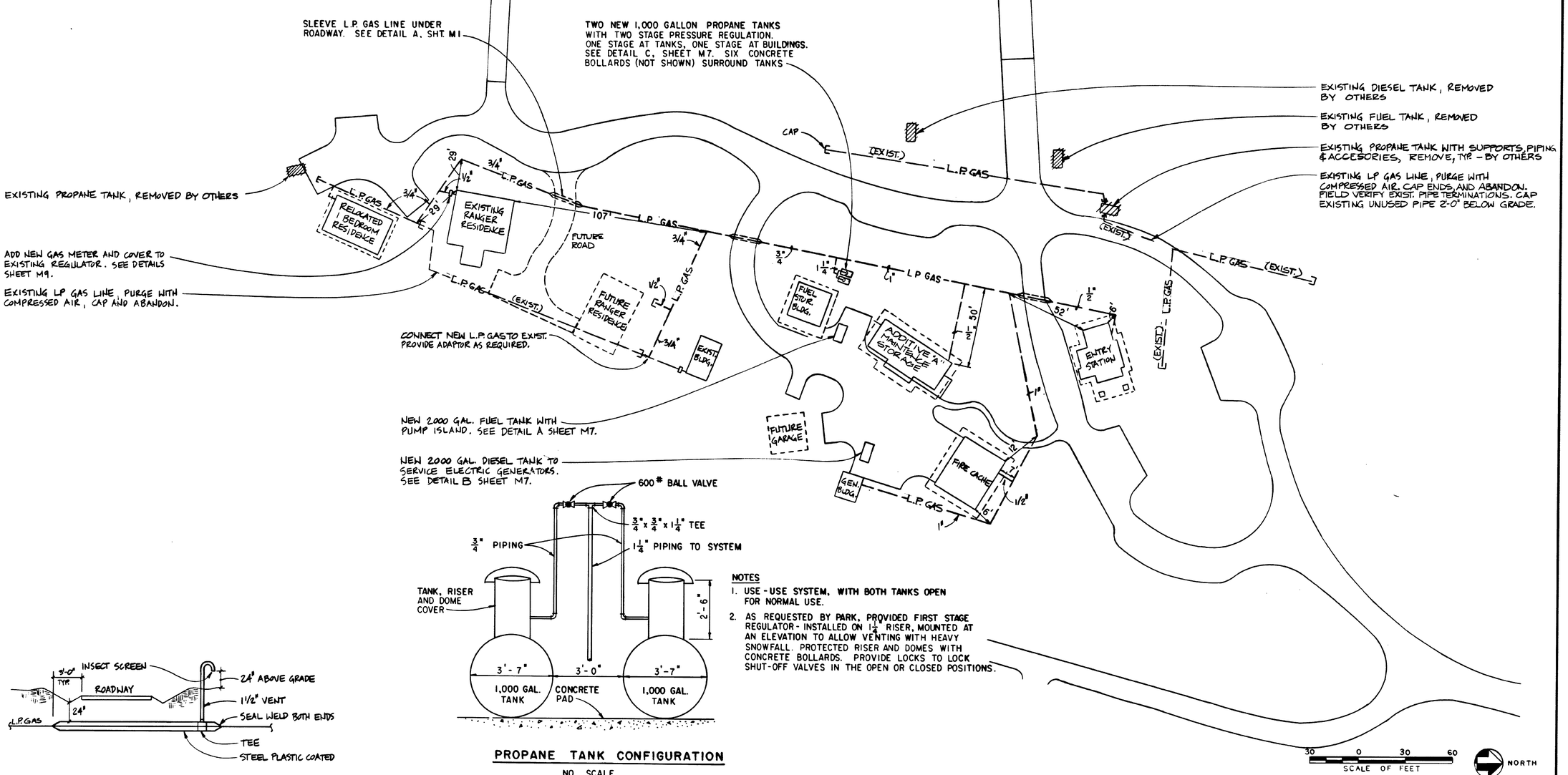

PROPANE TANK CONFIGURATION

NO SCALE

NOTES

1. USE-USE SYSTEM, WITH BOTH TANKS OPEN FOR NORMAL USE.
2. AS REQUESTED BY PARK, PROVIDED FIRST STAGE REGULATOR - INSTALLED ON 1 1/4" RISER, MOUNTED AT AN ELEVATION TO ALLOW VENTING WITH HEAVY SNOWFALL. PROTECTED RISER AND DOMES WITH CONCRETE BOLLARDS. PROVIDE LOCKS TO LOCK SHUT-OFF VALVES IN THE OPEN OR CLOSED POSITIONS.

SLEEVE DETAIL A / M1

ALL MECHANICAL WORK ON SUBSHEET M1 - M3 AND M6 - M9 IS BASE BID, EXCEPT AS NOTED AS ADDITIVE "B" IS SUBSHEET M4 - M5 AND RELATED DETAILS.

DESIGNED: MKK	SUB SHEET NO.	TITLE OF SHEET	DRAWING NO. 117 / 41073 B
DRAWN: MCS	M1	MECHANICAL SITE PLAN	PKG. NO. GL DS 91
TECH. REVIEW:			SHEET 34 OF 55
DATE: 7/14/89			

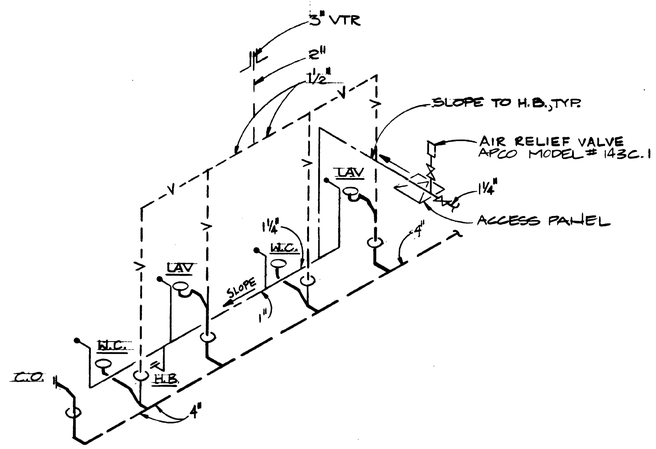

PLUMBING ISOMETRIC
NO SCALE

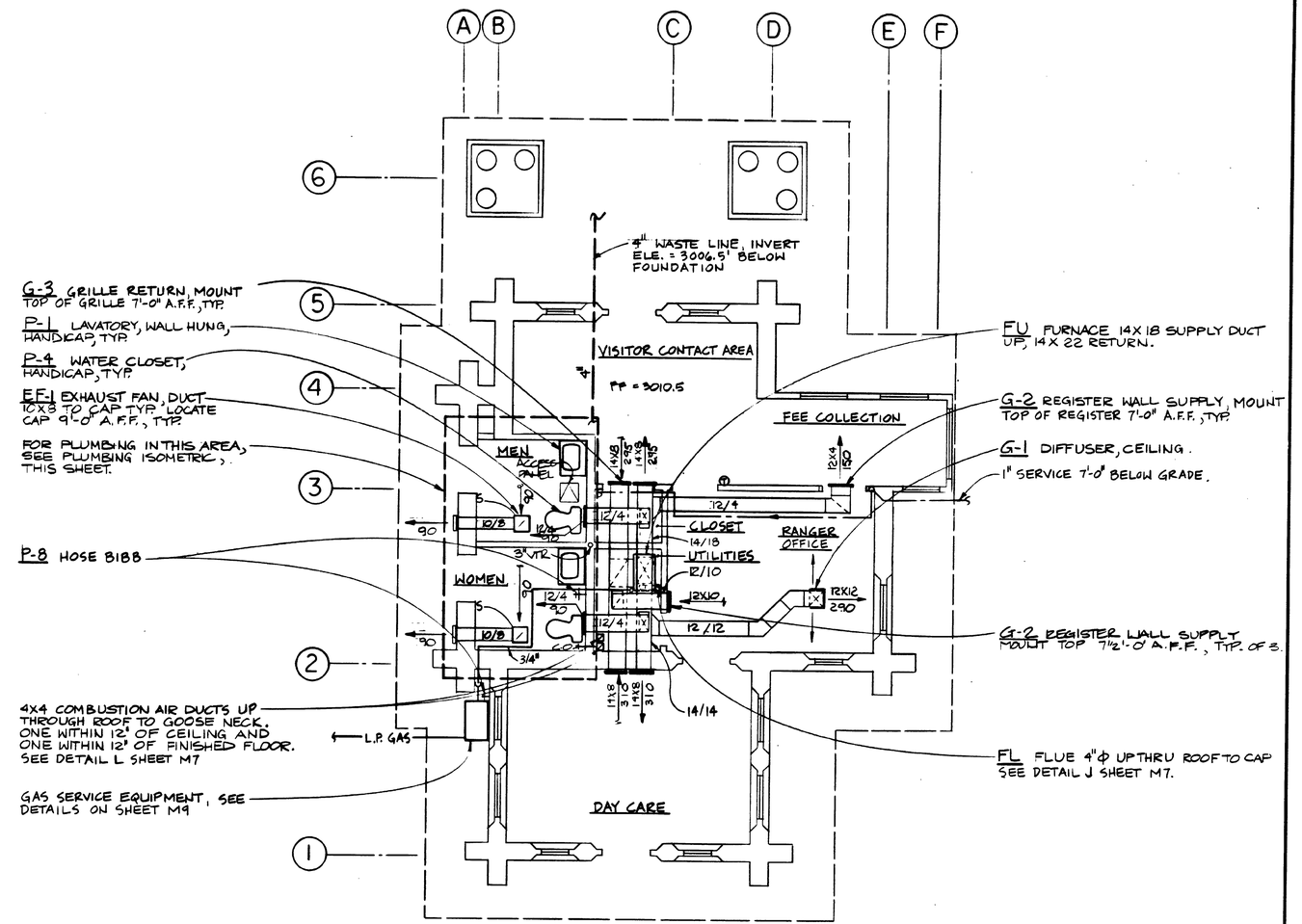

ENTRANCE STATION MECHANICAL PLAN

4 0 4 8
SCALE OF FEET

NORTH

DESIGNED: MKK	SUB SHEET NO.	TITLE OF SHEET	DRAWING NO. 117 / 41073B
DRAWN: MCS	M2	ENTRANCE STATION MECHANICAL PLAN	PKG. NO. GL DS 91
TECH. REVIEW:			SHEET 35 OF 55
DATE: 7/14/89			

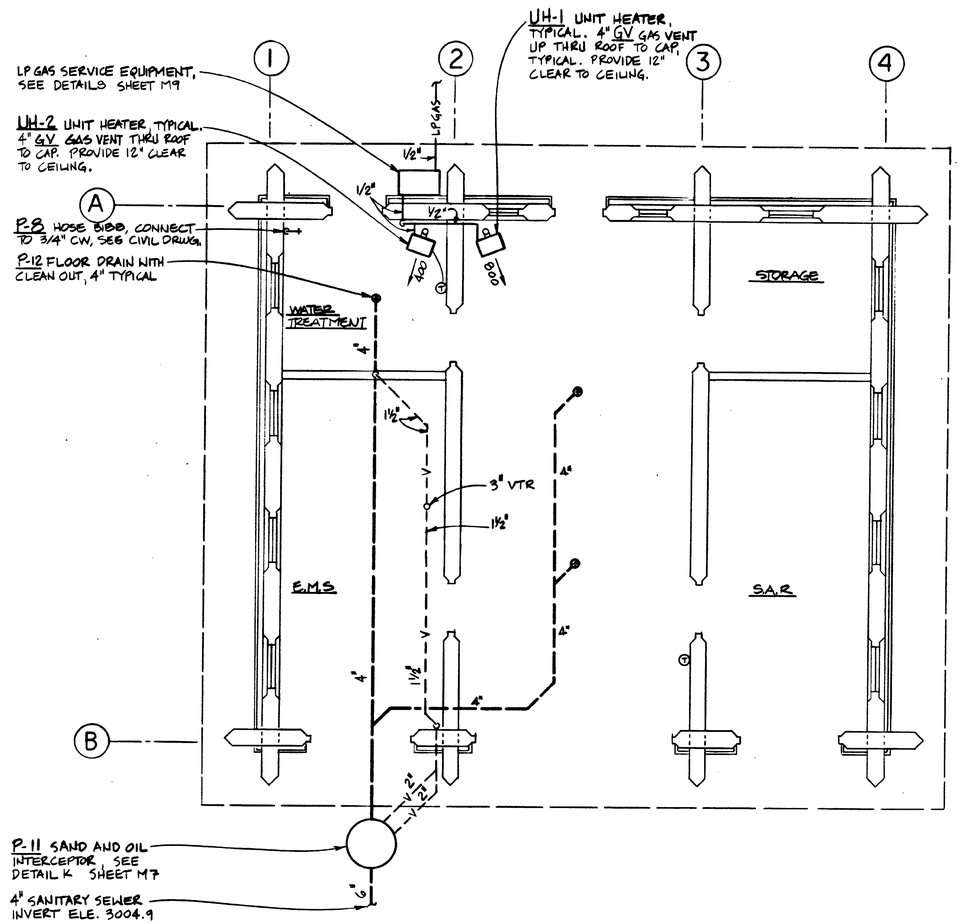

FIRE CACHE BUILDING MECHANICAL PLAN

4 0 4 8
SCALE OF FEET

NORTH

DESIGNED: MKK	SUB SHEET NO.	TITLE OF SHEET	DRAWING NO. 117 41073B
DRAWN: MCS	M3	FIRE CACHE BUILDING MECHANICAL PLAN	PKG. NO. GL DS 91
TECH. REVIEW:			SHEET 36 OF 55
DATE: 7/14/89			

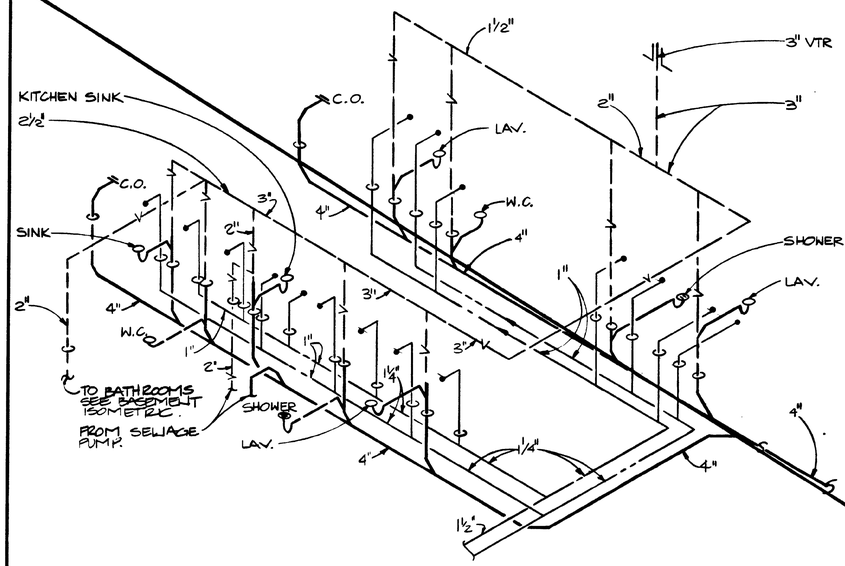

FIRST FLOOR ISOMETRIC
NO SCALE

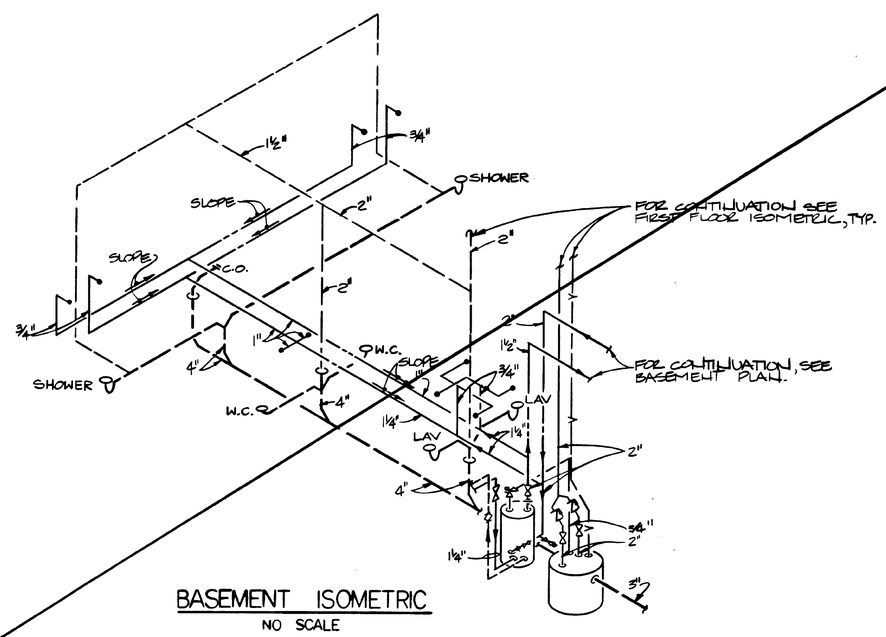

BASEMENT ISOMETRIC
NO SCALE

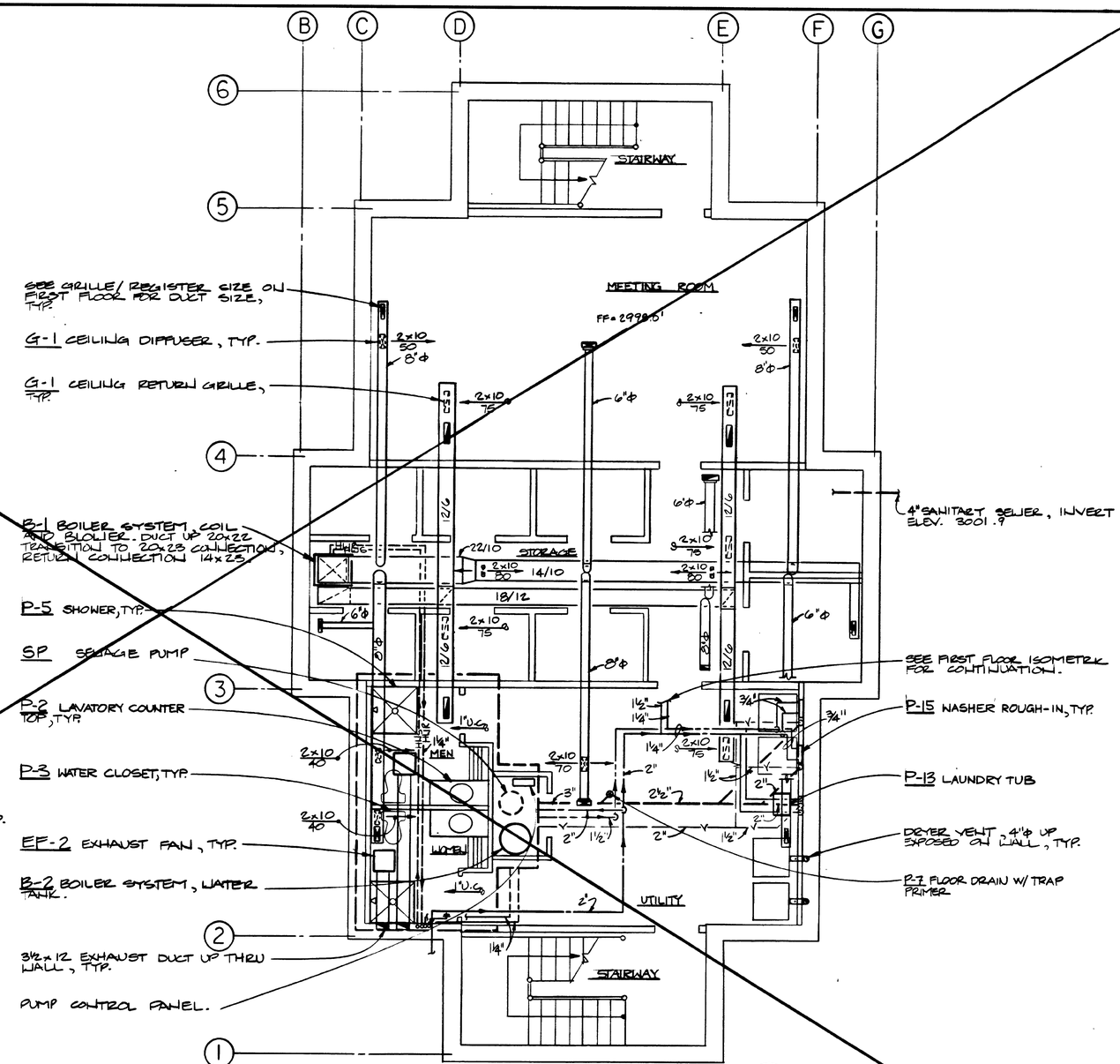

DELETED
NOT IN CONTRACT

BASEMENT PLAN
4 0 4 8
SCALE OF FEET

DESIGNED: MKK	SUB SHEET NO.	TITLE OF SHEET	DRAWING NO. 117 41073B
DRAWN: MCS	M4	DORMITORY BASEMENT MECHANICAL PLAN	PKG. NO. GL DS 91
TECH. REVIEW:		(N.I.C.)	SHEET 37 OF 55
DATE: 7/14/89			

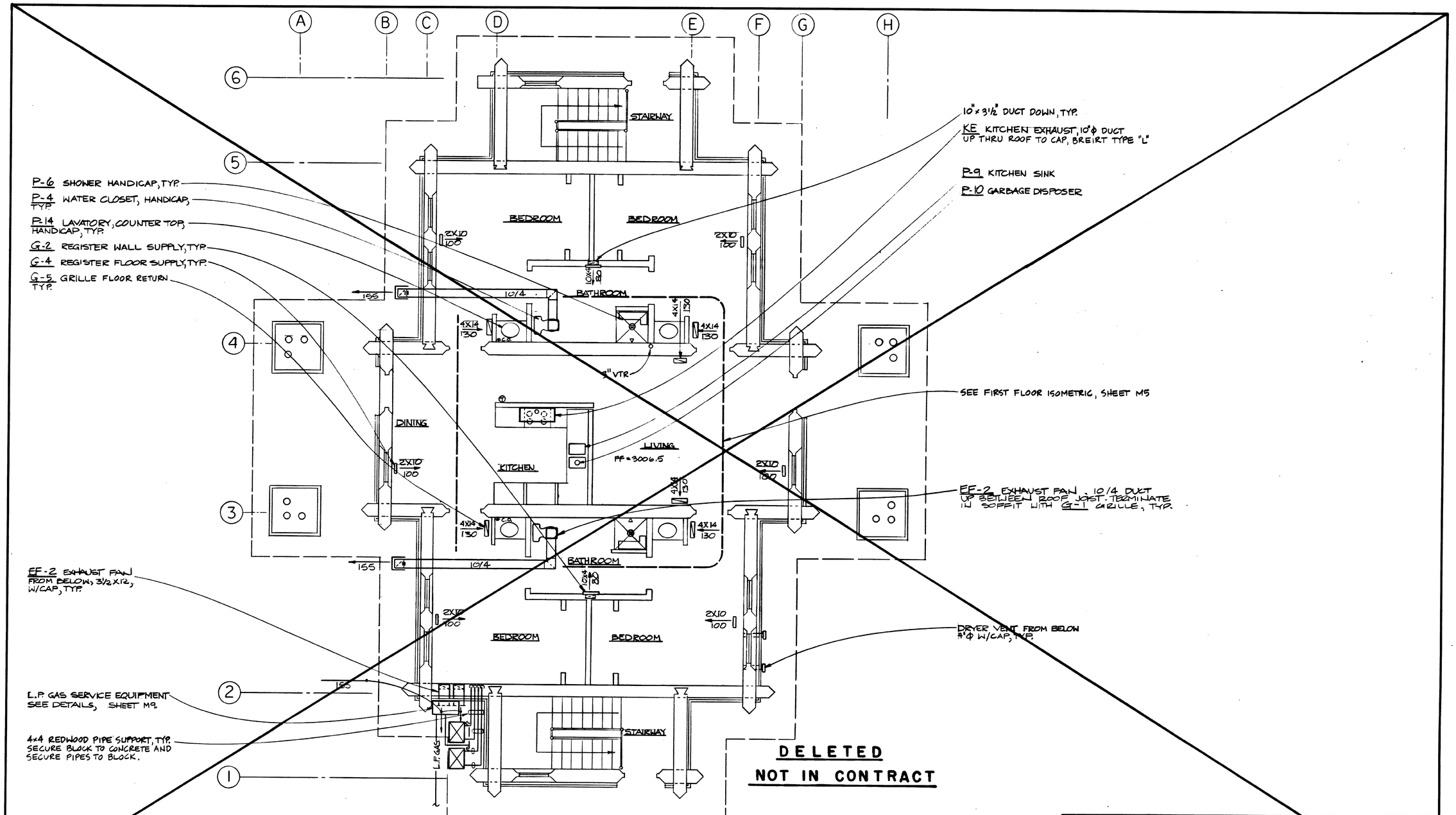

DORMITORY MECHANICAL PLAN

4 0 4 8
SCALE OF FEET

NORTH

DESIGNED: MKK	SUB SHEET NO.	TITLE OF SHEET	DRAWING NO. 117 41073B
DRAWN: MCS	M 5	DORMITORY MECHANICAL PLAN (N.I.C.)	PKG. NO. GL DS 91
TECH. REVIEW:			SHEET 38 OF 55
DATE: 7/14/89			

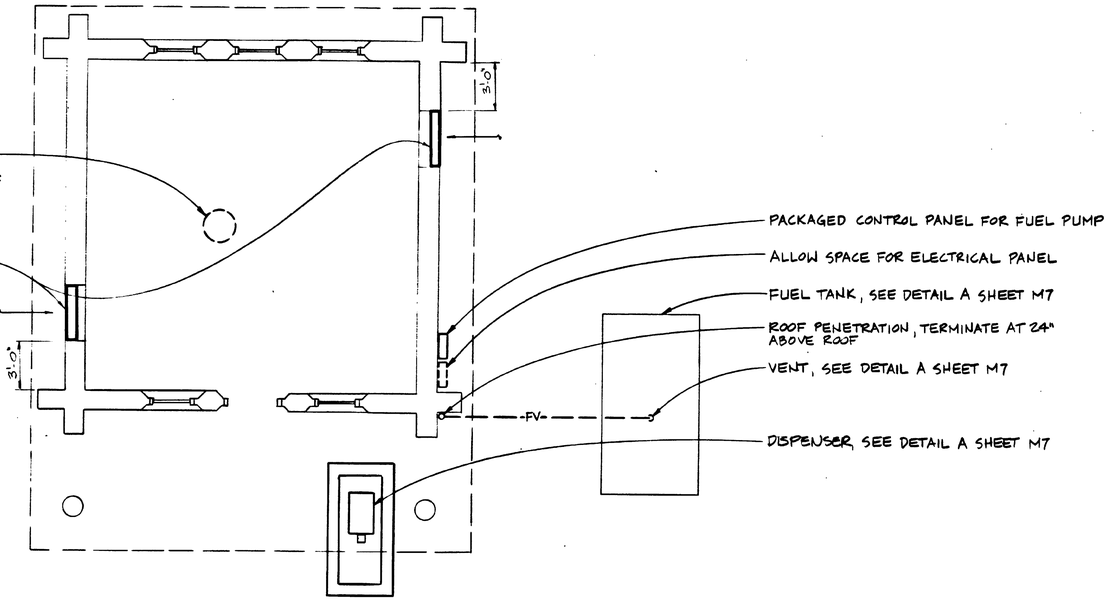

FLAMMABLE STORAGE MECHANICAL PLAN

4 0 4 8
SCALE OF FEET

NORTH

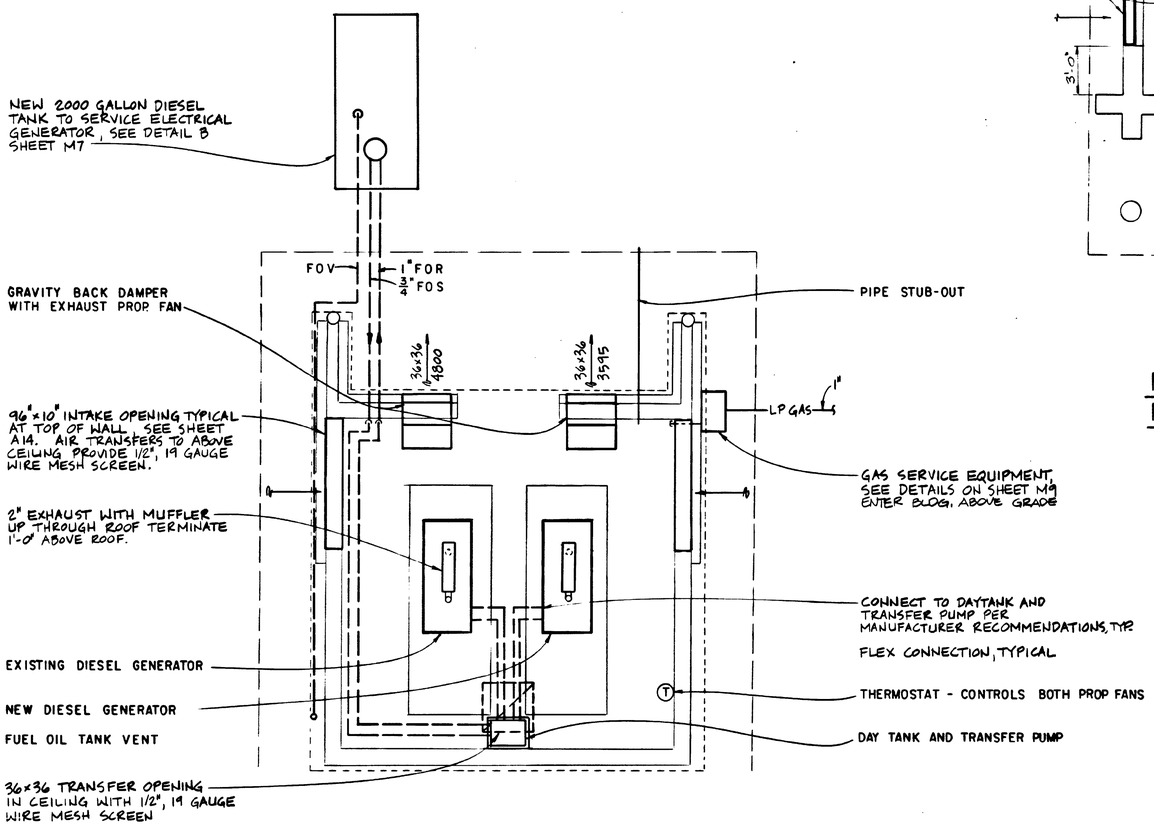

GENERATOR BUILDING MECHANICAL PLAN

4 0 4 8
SCALE OF FEET

NORTH

DESIGNED: MKK DRAWN: MCS TECH. REVIEW: DATE: 7/14/89	SUB SHEET NO. M6	TITLE OF SHEET GENERATOR AND FLAMMABLE STORAGE MECHANICAL PLANS	DRAWING NO. 117/41073B PKG. NO. GL DS 91 SHEET 39 OF 55

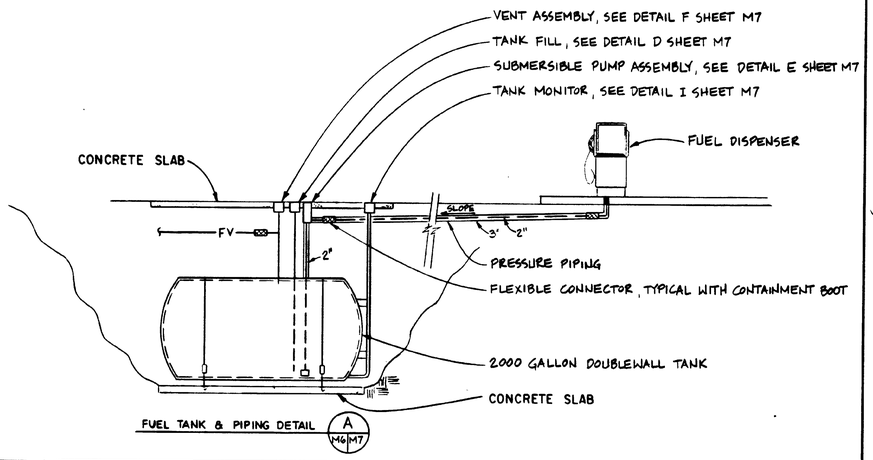

FUEL TANK & PIPING DETAIL (A / M6 M7)

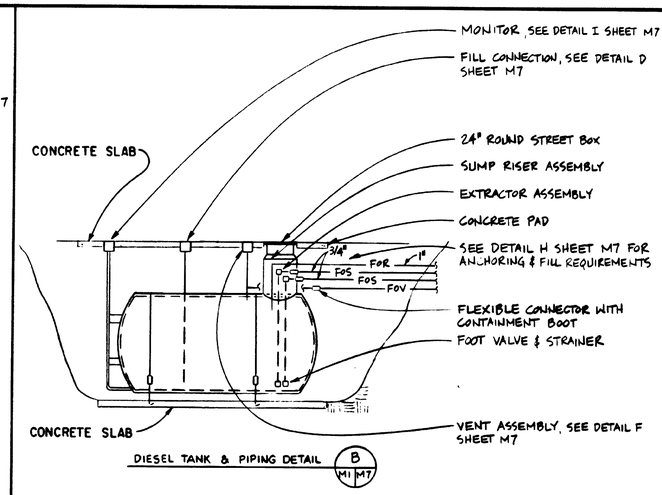

DIESEL TANK & PIPING DETAIL (B / M1 M7)

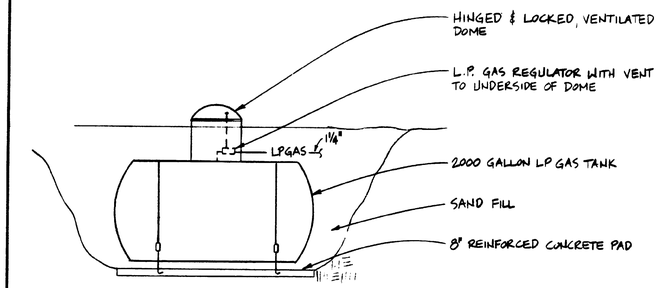

LP GAS TANK & PIPING DETAIL (C / M6 M7)

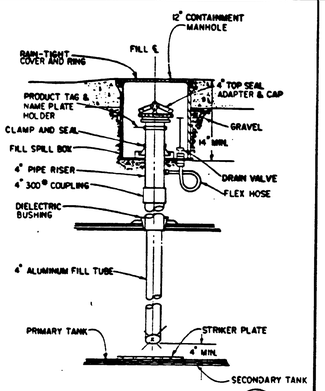

FILL CONNECTION DETAIL (D / M7)

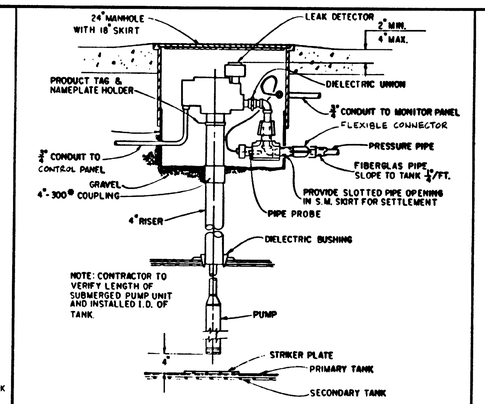

SUBMERSIBLE PUMP DETAIL (E / M7)

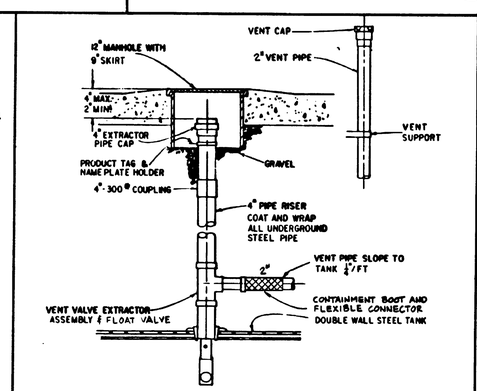

VENT DETAIL (F / M7)

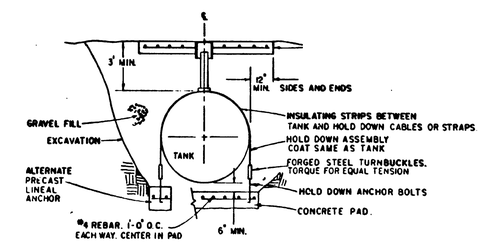

CONCRETE ANCHOR DETAIL (H / M7)

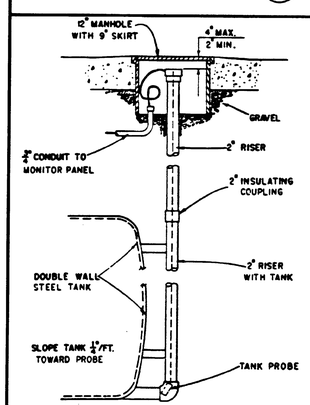

TANK MONITOR DETAIL (I / M7)

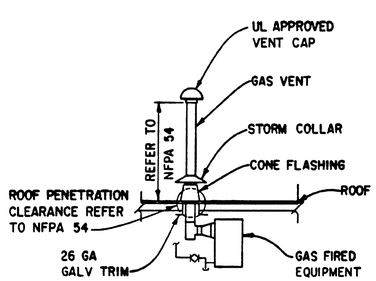

GAS VENT (J / M3 M7)

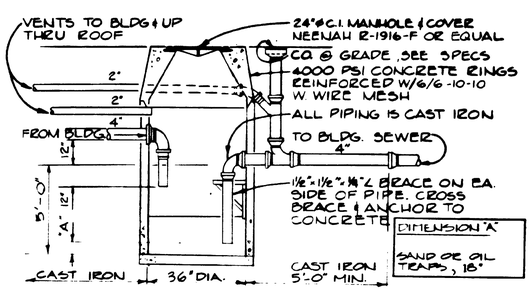

SAND & OIL TRAP (K / M3 M7)

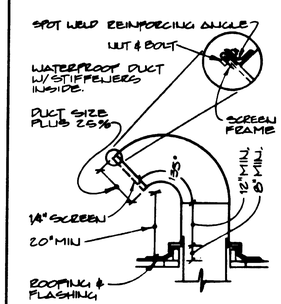

GOOSENECK (L / M2 M7)

DESIGNED: MKK	SUB SHEET NO.	TITLE OF SHEET	DRAWING NO. 117 41,073B
DRAWN: MCS	M7	MECHANICAL DETAILS	PKG. NO. GL DS 91
TECH. REVIEW:			SHEET 40 OF 55
DATE: 7/14/89			

UNIT HEATER SCHEDULE

UNIT NO.	LOCATION	TYPE	CFM @ 70°F	INPUT @ S.L. - MBH	OUTPUT @ ALT. - MBH (3,000')	MANUFACTURER AND MODEL NUMBER	REMARKS
UH-1	FIRE CACHE	HORIZONTAL	800	45	32.12	TRANE GPPC-004	
UH-2	FIRE CACHE	HORIZONTAL	400	30	20.59	TRANE GPPC-003	

EXHAUST FAN SCHEDULE

UNIT NO.	LOCATION	CFM	ESP @ S.L.	RPM	MAXIMUM SONES	MANUFACTURER AND MODEL NUMBER	REMARKS
EF-1	ENTRANCE	90	.25	1050	2.5	PENN ZEPHYR Z8	WITH WALL CAP

FAN COIL AND BLOWER SCHEDULE

UNIT NO.	CFM	E.S.P. INCHES W.C.	EAT °F	EWT °F	CAPACITY BTUH @ ALT.	MANUFACTURER AND MODEL NUMBER	REMARKS
B-1	1150	.4	72	200	87.120	AMANA EBWC360RM-B	

FURNACE SCHEDULE

UNIT NO.	LOCATION	INPUT @ S.L.-MBH	OUTPUT @ ALT.-MBH (3,000')	CFM	E.S.P. " H_2O	FLUE SIZE	MANUFACTURER AND MODEL NUMBER	REMARKS
FU	ENTRANCE	75	51.04	1185	.3	4"ø	LENNOX G16Q3X-75	

STATIONARY LOUVER SCHEDULE

UNIT NO.	LOCATION	FREE AREA FT^2	MANUFACTURER & MODEL NUMBER	REMARKS
SL-1	FLAMMABLE STORAGE	5.56	AMERICAN WARMING LF-47	
SL-2	GENERATOR BLDG.			

GRILLE, REGISTER AND DIFFUSER SCHEDULE

UNIT NO.	TYPE	MOUNT TYPE	PATTERN	REMARKS	MANUFACTURER AND MODEL NUMBER
G-1	MULTI-LOUVER, 1/2" BIANGULAR LANCED, WHITE FINISH, STEEL OR ALUMINUM DIFFUSER	CEILING	AS SHOWN ON PLANS	KEY: NOM. GRILLE SIZE / CFM	LIMA 11D OR A11D
G-2	SIDEWALL SUPPLY REGISTER, MULTI-LOUVER, 1/2" LANCED, WHITE FINISH, STEEL OR ALUM.	WALL	AS SHOWN ON PLANS	KEY: NOM. GRILLE SIZE / CFM	LIMA 10V
G-3	RETURN GRILLE, HORIZONTAL	WALL	AS SHOWN ON PLANS	KEY: NOM. GRILLE SIZE / CFM	LIMA 19H
G-4	SHALLOW-VALVE DIFFUSER	FLOOR	AS SHOWN ON PLANS	KEY: NOM. GRILLE SIZE / CFM	LIMA 41
G-5	RETURN GRILLE	FLOOR	AS SHOWN ON PLANS	KEY: NOM. GRILLE SIZE / CFM	LIMA 41

FAN SCHEDULE

UNIT NO.	LOCATION	CFM	ESP @ SL	MAXIMUM SONES	MANUFACTURER AND MODEL NUMBER	REMARKS
PF	GENERATOR BUILDING	3595	.25	9.0	PENN BREEZEWAY TYPE BF24	

MECHANICAL LEGEND

- HOT WATER HEATING SUPPLY
- HOT WATER HEATING RETURN
- GATE VALVE
- PLUG VALVE
- SAFETY VALVE-ANGLE
- HOSE BIBB GATE VALVE
- COLD WATER
- HOT WATER
- SOIL, WASTE OR LEADER (ABOVE GRADE)
- SOIL, WASTE OR LEADER (BELOW GRADE)
- S — SEWER LINE (FORCE MAIN)
- V — VENT LINE
- L.P. GAS — LIQUIFIED PETROLEUM GAS
- CAP PIPE
- PIPE UNION
- SLEEVE-THROUGH WALL
- DUCT SECTION (SUPPLY)
- DUCT SECTION (RETURN)
- 12/20 — DUCT (1ST FIGURE, SIDE SHOWN- 2ND FIGURE, SIDE NOT SHOWN)
- TRANSITIONS
- STANDARD BRANCH FOR SUPPLY AND RETURN
- T — THERMOSTAT
- 12x20G / CFM — GRILLE- PLAN VIEW
- 12x20R — REGISTER- PLAN VIEW
- 12x20 / CFM — FLOOR SUPPLY GRILLE (SG)
- 12x20 — FLOOR RETURN GRILLE (RG)
- DRAINS IN FINISHED AREA
- C.O. — HORIZONTAL CLEANOUT

FIXTURE CONNECTION SCHEDULE

FIXTURE	HW	CW	WASTE	VENT
WATER CLOSET (FLUSH TANK)	—	1/2"	4"	2"
LAVATORY	1/2"	1/2"	1 1/2"	1 1/2"
SHOWER	3/4"	3/4"	2"	1 1/2"
KITCHEN SINK (W/ DISPOSER)	1/2"	1/2"	2"	1 1/2"
CLOTHES WASHER ROUGH-IN	1/2"	1/2"	2"	1 1/2"
LAUNDRY TUB	1/2"	1/2"	2"	1 1/2"

SIZES SHOWN ARE MINIMUM PIPE SIZES TO A SINGLE FIXTURE. ALL FIXTURES LISTED ARE NOT NECESSARILY ON THIS PROJECT.

DESIGNED: MKK	SUB SHEET NO.	TITLE OF SHEET	DRAWING NO. 117 / 41073B
DRAWN: MCS	M8	SCHEDULES	PKG. NO. DS 91
TECH. REVIEW:			SHEET 41 OF 55
DATE: 7/14/89			

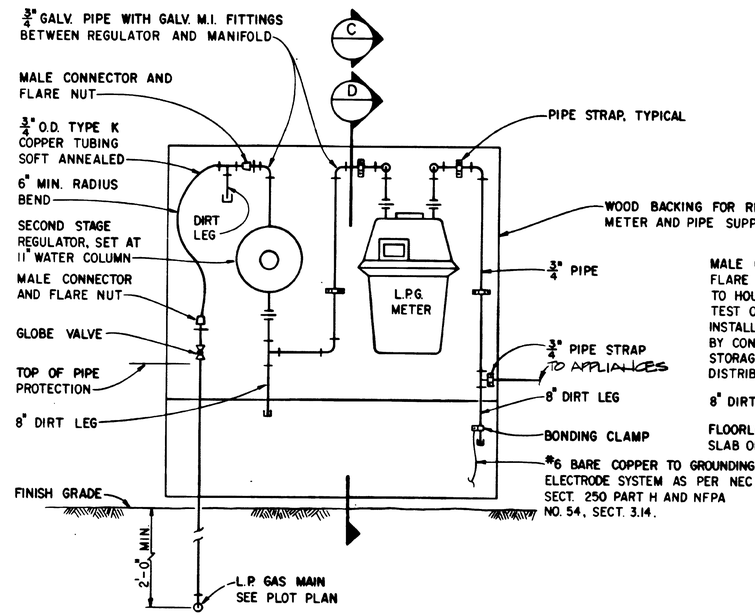

SERVICE EQUIPMENT ELEVATION

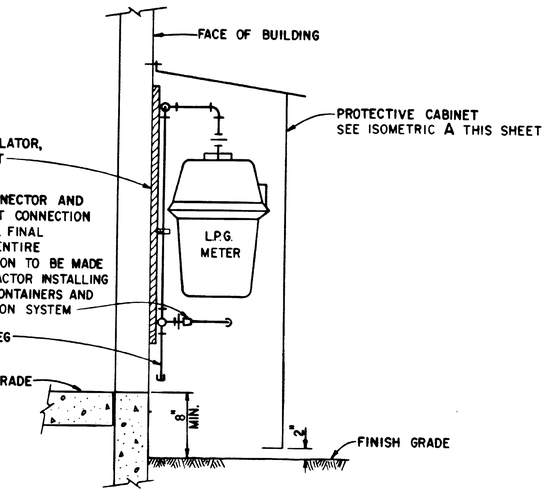

SLAB ON GRADE SECTION (D)

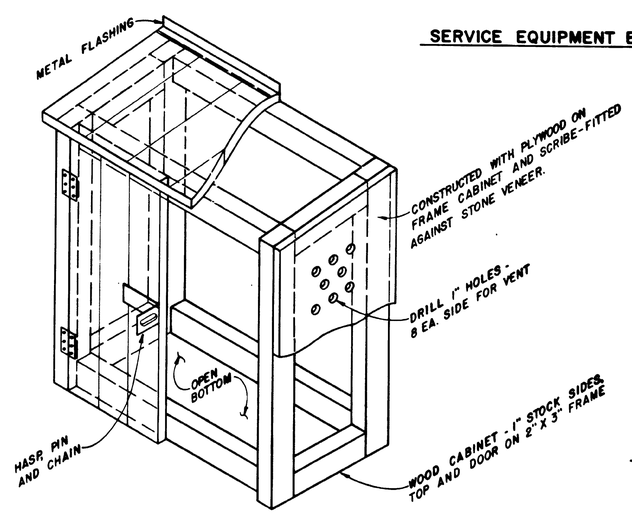

WOOD CABINET

PROTECTIVE CABINET FOR HOUSE SERVICE EQUIPMENT (A)

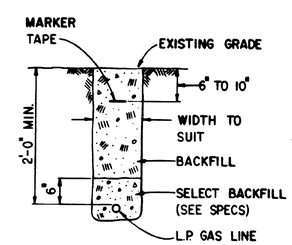

PIPE TRENCH DETAIL

NOTES

1. SEE PLOT PLAN FOR LOCATION AND/OR BUILDING FLOOR PLANS FOR SIZE OF SERVICE EQUIPMENT.
2. THREADED PIPE, TUBING, FITTINGS AND JOINTS TO BE N.F.P.A. PAMPHLETS NOS. 54, 58 AND 9H.

NO SCALE

DESIGNED: STANDARD BY VASCONCELLOS DRAWN: Buchotte TECH. REVIEW: DATE: 8/83	SUB SHEET NO. M9	TITLE OF SHEET LIQUEFIED PETROLEUM GAS SERVICE EQUIPMENT AND DETAILS (STANDARD DESIGN #15482)	DRAWING NO. 117 PKG. NO. GC DS 91 SHEET 42 OF ___

THESE DRAWINGS ARE DIAGRAMMATIC - REFER TO ARCHITECTURAL DRAWINGS FOR EXACT DIMENSIONS. BRANCH CIRCUITING CONVENTION - #12 AWG PER PHASE AND NEUTRAL (WHERE REQUIRED) AND 20 AMPERE CIRCUIT BREAKER, UNLESS OTHERWISE NOTED. PROVIDE QUANTITY AND SIZE SWITCH CONDUCTORS AS REQUIRED TO MAKE SYSTEM OPERATIONAL.

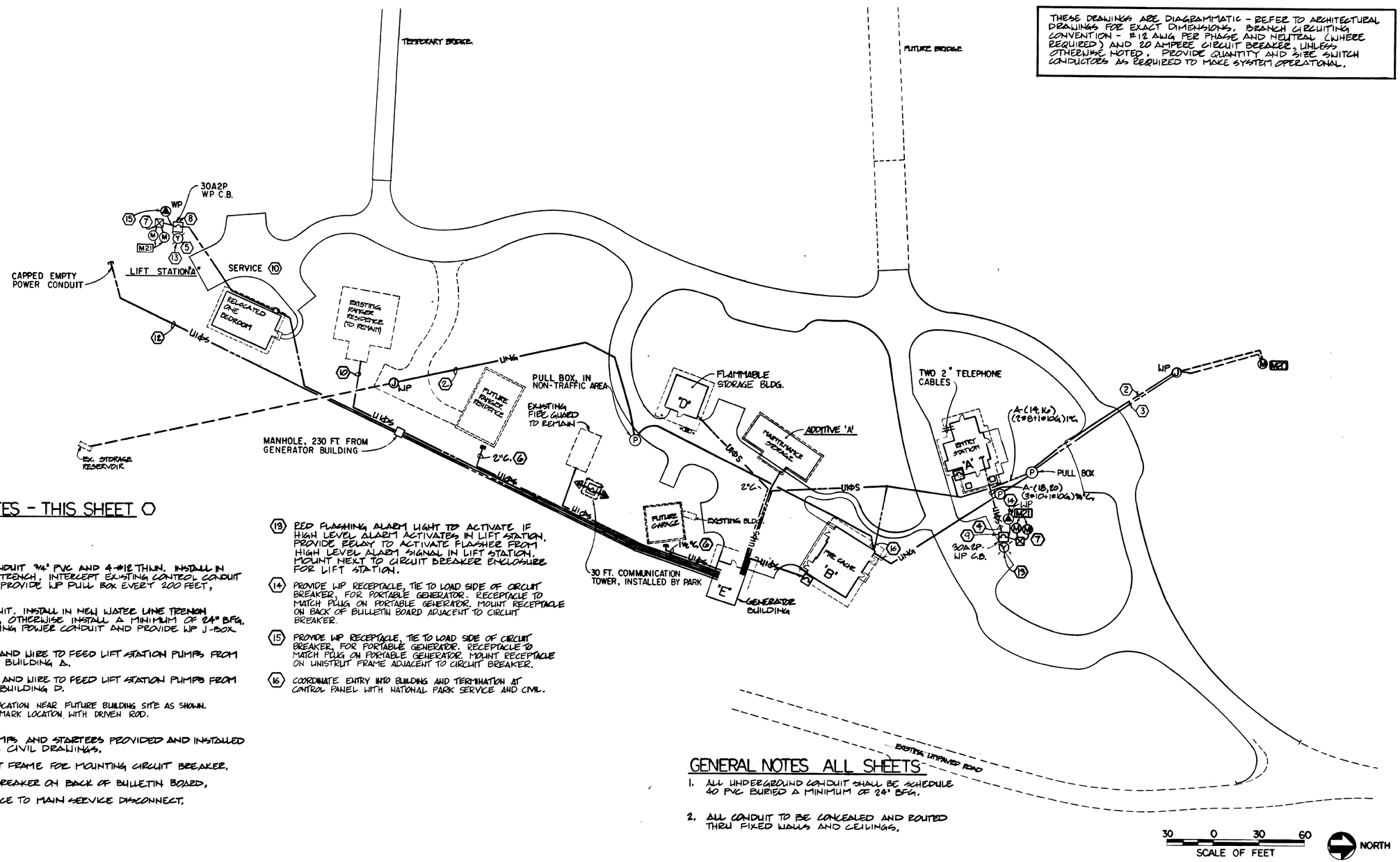

WORK NOTES - THIS SHEET

(2) NEW CONTROL CONDUIT 3/4" PVC AND 4-#12 THWN. INSTALL IN NEW WATER LINE TRENCH. INTERCEPT EXISTING CONTROL CONDUIT WHERE SHOWN. PROVIDE WP PULL BOX EVERY 200 FEET, MINIMUM.

(3) NEW POWER CONDUIT. INSTALL IN NEW WATER LINE TRENCH WHERE POSSIBLE, OTHERWISE INSTALL A MINIMUM OF 24" BFG. INTERCEPT EXISTING POWER CONDUIT AND PROVIDE WP J-BOX WHERE SHOWN.

(4) PROVIDE CONDUIT AND WIRE TO FEED LIFT STATION PUMPS FROM ENTRY STATION, BUILDING A.

(5) PROVIDE CONDUIT AND WIRE TO FEED LIFT STATION PUMPS FROM FUEL STORAGE, BUILDING D.

(6) ROUTE CONDUIT TO LOCATION NEAR FUTURE BUILDING SITE AS SHOWN. PROVIDE PULL CAP, MARK LOCATION WITH DRIVEN ROD.

(7) LIFT STATION PUMPS AND STARTERS PROVIDED AND INSTALLED BY OTHERS, SEE CIVIL DRAWINGS.

(8) PROVIDE UNISTRUT FRAME FOR MOUNTING CIRCUIT BREAKER.

(9) MOUNT CIRCUIT BREAKER ON BACK OF BULLETIN BOARD.

(10) RECONNECT SERVICE TO MAIN SERVICE DISCONNECT.

(12) PROVIDE (4 #2G+1#4 G) PHASE C CONDUCTOR SHALL NOT BE USED AT THIS TIME, TAPE AT BOTH ENDS.

(13) RED FLASHING ALARM LIGHT TO ACTIVATE IF HIGH LEVEL ALARM ACTIVATES IN LIFT STATION. PROVIDE RELAY TO ACTIVATE FLASHER FROM HIGH LEVEL ALARM SIGNAL IN LIFT STATION. MOUNT NEXT TO CIRCUIT BREAKER ENCLOSURE FOR LIFT STATION.

(14) PROVIDE WP RECEPTACLE, TIE TO LOAD SIDE OF CIRCUIT BREAKER, FOR PORTABLE GENERATOR. RECEPTACLE TO MATCH PLUG ON PORTABLE GENERATOR. MOUNT RECEPTACLE ON BACK OF BULLETIN BOARD ADJACENT TO CIRCUIT BREAKER.

(15) PROVIDE WP RECEPTACLE, TIE TO LOAD SIDE OF CIRCUIT BREAKER, FOR PORTABLE GENERATOR. RECEPTACLE TO MATCH PLUG ON PORTABLE GENERATOR. MOUNT RECEPTACLE ON UNISTRUT FRAME ADJACENT TO CIRCUIT BREAKER.

(16) COORDINATE ENTRY INTO BUILDING AND TERMINATION AT CONTROL PANEL WITH NATIONAL PARK SERVICE AND CIVIL.

GENERAL NOTES ALL SHEETS

1. ALL UNDERGROUND CONDUIT SHALL BE SCHEDULE 40 PVC BURIED A MINIMUM OF 24" BFG.
2. ALL CONDUIT TO BE CONCEALED AND ROUTED THRU FIXED WALLS AND CEILINGS.

30 0 30 60
SCALE OF FEET

NORTH

ALL ELECTRICAL WORK - SUBSHEETS E1-E3, E6-E8 IS BASE BID, EXCEPT WHERE NOTED AS ADDITIVE A. ADDITIVE B IS SUBSHEET E4-E5 AND RELATED DETAILS.

DESIGNED: M.K.K.	SUB SHEET NO.	TITLE OF SHEET	DRAWING NO. 117 41073B
DRAWN: LSB/DR	E-1	POLEBRIDGE DEVELOPMENT ELECTRICAL SITE PLAN	PKG. NO. GLAC DS 91
TECH. REVIEW: JJ			SHEET 43 OF 55
DATE: 7/14/89			

WORK NOTES-THIS SHEET

1. 2" UNDERGROUND EMPTY CONDUIT WITH PULL WIRE FOR TELEPHONE. EXTEND CONDUIT 5'-0" BEYOND BUILDING FOUNDATION, CAP AND STAKE
2. PROVIDE PHOTOELECTRIC CELL TORK MODEL #2101. MOUNT ON ROOF IN A LOCATION TO PROVIDE UNOBSTRUCTED NORTHERN VIEW.
3. REFER TO SHEET A-1 FOR EXACT TELEPHONE LOCATION AND DETAILS COORDINATE WITH ARCHITECTURAL.

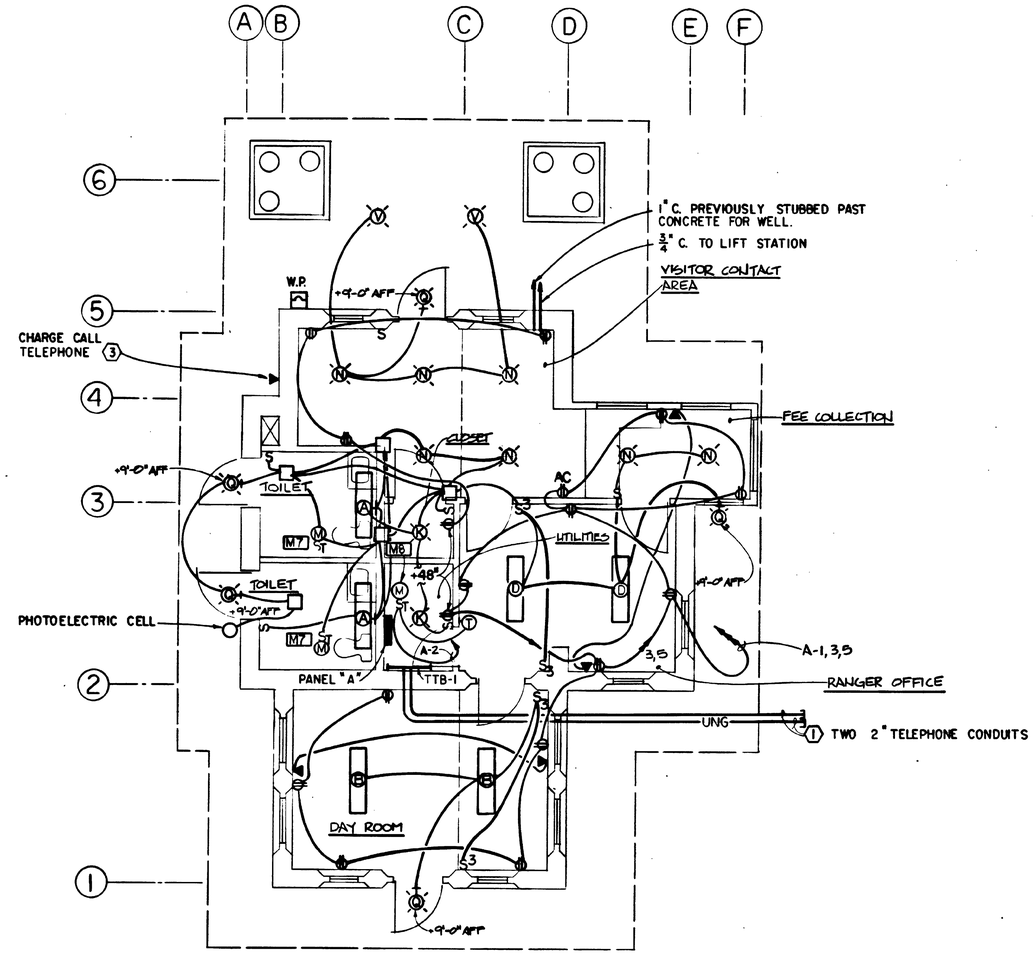

NOTE

TELEPHONE WIRING NOT SHOWN - NOT IN CONTRACT. TELEPHONE CONTRACTOR TO SUPPLY. TELEPHONE CONTRACTOR PULLED WIRE THROUGH INDICATED CONDUIT TO TELEPHONE LOCATIONS.

PANELBOARD "A" SCHEDULE

120/240 VOLTS 1 Ø 3 W 100 A. BUS — A. MAIN C.B. SURFACE MOUNT
SYM. A.I.R. (MAIN C.B. 10,000, BRANCH C.B. 10,000), WITH NEUTRAL BUS, PROVIDE GROUND BUS
BOLT-ON BRANCH C.B. NEMA 1 ENCLOSURE MANUFACTURER AND CAT. NO. GE AQ

LOAD VA	DESCRIPTION	A	B		DESCRIPTION	LOAD VA	BUS LOAD (VA) L1	BUS LOAD (VA) L2
900	RANGER RECEPT	1	2		FURNACE BLOWER	830	1730	
1080	DAY RM RECEPT	3	4	*	LIGHTING - EXTERIOR	360		1440
1080	VISITOR RECEPT	5	6		SPARE		1080	
1190	LIGHTING - INTERIOR	7	8		TTB RECEPT	360		1550
	SPARE	9	10		SPARE		-	
	↓	11	12		↓			-
	SPACE	13	14	20	INFILTRATION PUMP	920	920	
		15	16		-	920		920
		17	18	30	SWG. LIFT STN. PUMPS	1840	1840	
		19	20		-	1840		1840
		21	22		SPACE			
		23	24		↓			
		25	26					
		27	28					
		29	30					
		31	32					
		33	34					
		35	36					
		37	38					
		39	40					
		41	42					
					BUS LOAD TOTALS (KVA)		5.57	5.75
					TOTAL LOAD (KVA)		11.32	
					ESTIMATED MAXIMUM DEMAND (KVA)		12.1	

ALL CIRCUIT BREAKERS ARE 20A, 1P, UNLESS NOTED OTHERWISE.

* SWITCH RATED

4 0 4 8
SCALE OF FEET

DESIGNED: M.K.K.	SUB SHEET NO.	TITLE OF SHEET	DRAWING NO.
DRAWN: LSB/DR	E-2	ENTRANCE STATION ELECTRICAL PLAN	117 / 41073B
TECH. REVIEW: JJ			PKG. NO. GLAC DS 91 — SHEET 44 OF 55
DATE: 7/14/89			

WORK NOTES-THIS SHEET ⬡

1. ALL RECEPTACLES THIS ROOM BE MOUNTED AT +48" AFF.
2. 2" UNDERGROUND EMPTY CONDUIT WITH PULL WIRE FOR TELEPHONE. EXTEND CONDUIT 5'-0" BEYOND BUILDING FOUNDATION, CAP AND STAKE.
3. PROVIDE PHOTOELECTRIC CELL DICK MODEL #2101. MOUNT ON ROOF IN A LOCATION TO PROVIDE UNOBSTRUCTED NORTHERN VIEW.
4. ALL EQUIPMENT IN THIS ROOM SHALL BE CORROSION PROOF.
5. ALL RECEPTACLES THIS ROOM SHALL BE MOUNTED AT +30" AFF.

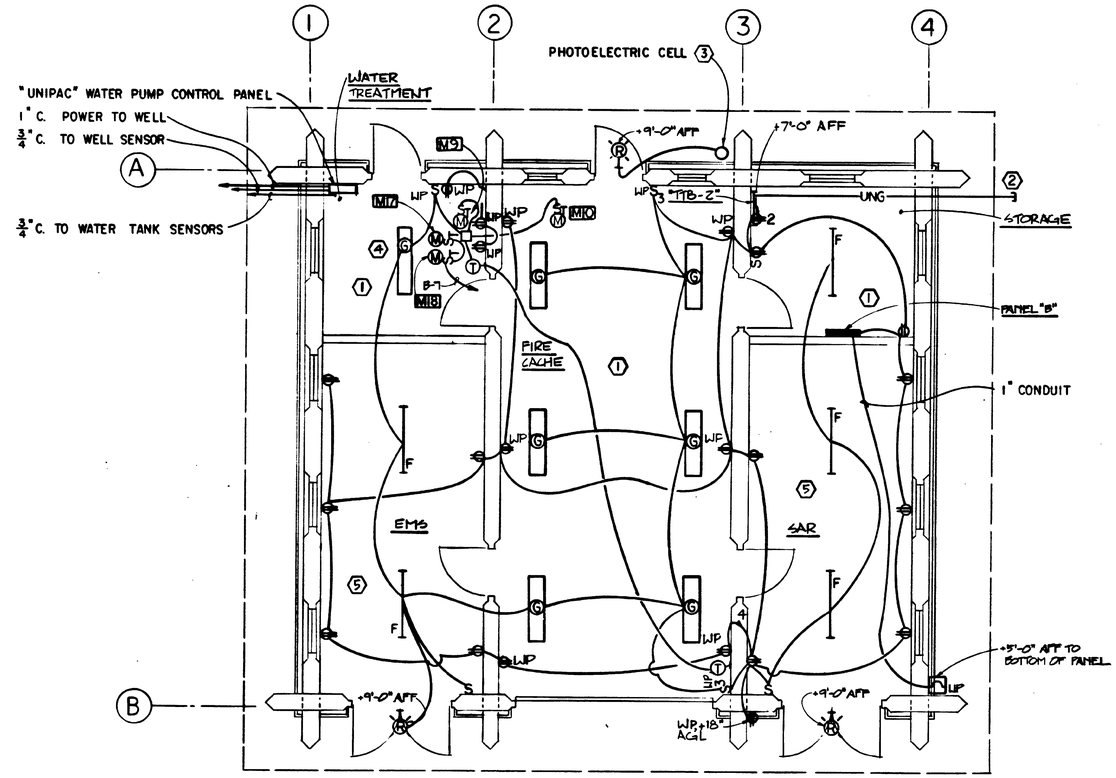

PANELBOARD "B" SCHEDULE

120/240 VOLTS 1 Ø 3 W 100 A. BUS – A. MAIN C.B. SURFACE MOUNT
SYM. A.I.R. (MAIN C.B. 10,000, BRANCH C.B. 10,000), WITH NEUTRAL BUS, PROVIDE GROUND BUS
BOLT-ON BRANCH C.B. NEMA 1 ENCLOSURE MANUFACTURER AND CAT. NO. GE AQ

LOAD VA	DESCRIPTION	A	B	DESCRIPTION	LOAD VA	BUS LOAD (VA) L1	BUS LOAD (VA) L2
1200	LIGHTING-INTERIOR	1	2	SAR/STOR. RECEPT	1200	2400	
150	LIGHTING-EXTERIOR	* 3	4	FIRE CACHE RECEPT	1080		1230
150	UNIT HEATER (2)	5	6	SPARE		150	
290	METERING PMP & MIXER	7	8	SAR/WATER RECEPT	1080		1370
	SPARE	9	10	SPARE		–	
	↓	11	12	TTB RECEPT	180		180
	SPACE	13	14	SPACE			
		15	16				
		17	18				
		19	20				
		21	22				
		23	24				
		25	26				
		27	28				
		29	30				
		31	32				
		33	34				
		35	36				
		37	38				
		39	40				
		41	42				
				BUS LOAD TOTALS (KVA)		2.61	2.78
				TOTAL LOAD (KVA)		5.4	
				ESTIMATED MAXIMUM DEMAND (KVA)		5.8	

ALL CIRCUIT BREAKERS ARE 20A, 1P, UNLESS NOTED OTHERWISE.

* RATED FOR SWITCHING

4 0 4 8
SCALE OF FEET

DESIGNED: M.K.K.	SUB SHEET NO.	TITLE OF SHEET	DRAWING NO.
DRAWN: LSB/DR TECH. REVIEW: JJ DATE: 7/14/89	E-3	FIRE CACHE BUILDING ELECTRICAL PLAN	117 41073B
		PKG. NO. GLAC DS 91	SHEET 45 OF 55

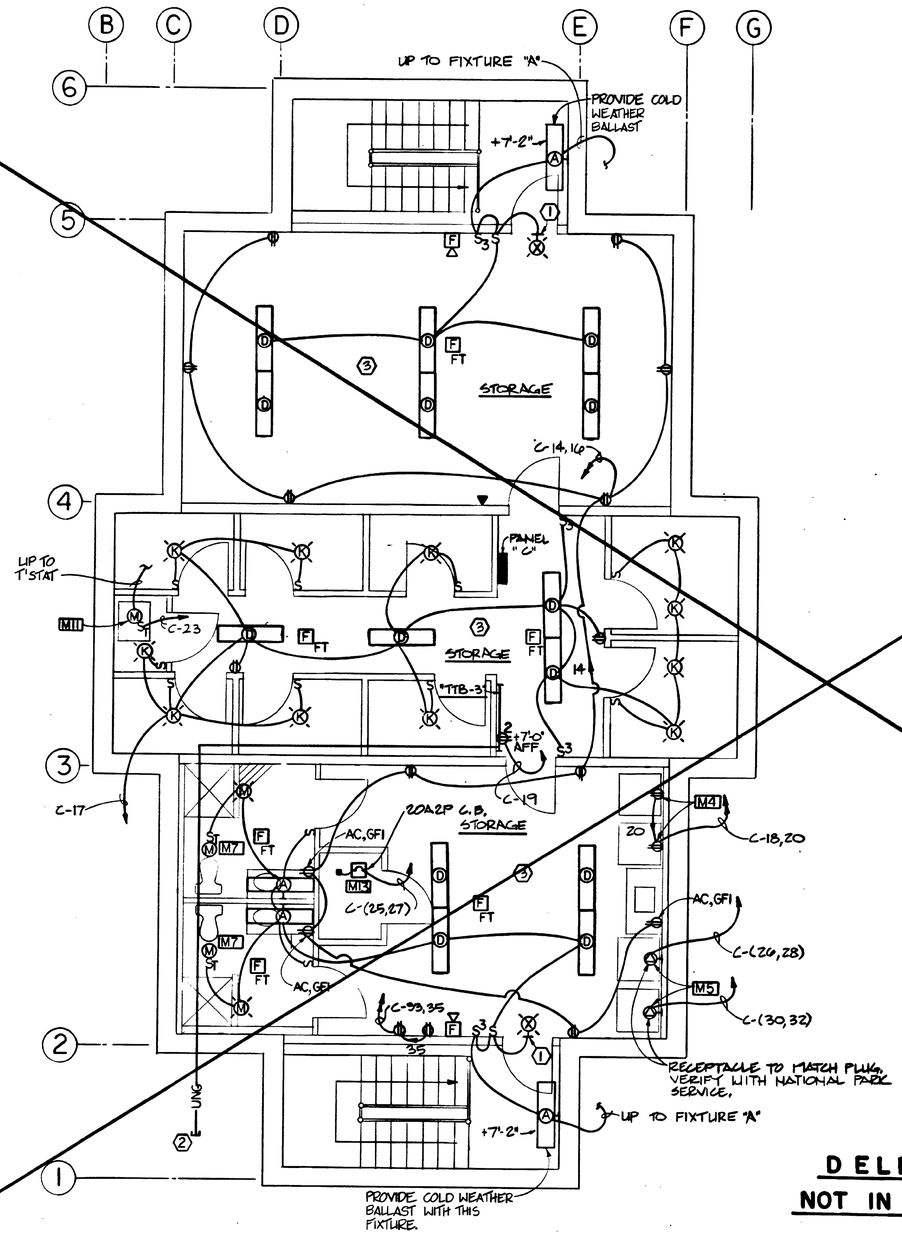

WORK NOTES-THIS SHEET

1. THIS FIXTURE TO BE UNSWITCHED. CONNECT TO LOCAL CIRCUIT AS SHOWN AHEAD OF SWITCHING.
2. 2" UNDERGROUND EMPTY CONDUIT WITH PULL WIRE FOR TELEPHONE. EXTEND CONDUIT 5'-0" BEYOND BUILDING FOUNDATION, CAP AND STAKE.
3. PENDANT MOUNT ALL FIXTURES IN THIS ROOM AT A UNIFORM HEIGHT TO AVOID DUCTWORK.

EQUIPMENT SCHEDULE

KEY	DESCRIPTION	LOAD	VOLT-0	FEEDER	O.C. PROTECTION C.B.	O.C. PROTECTION CAT. NO.	REMARKS
M1	OWNER PROVIDED REFRIGERATOR	900W	120-1	(2#12+#12G)1/2"C	20A1P	–	
M2	OWNER PROVIDED RANGE	8KW	240-1	(2#6+#10G)1"C	50A2P	–	PROVIDE NEMA 6-50 RECEPT.
							AND MATCHING PLUG
M3	RANGE HOOD	200W	120-1	(2#12+#12G)1/2"C	20A1P	–	
M4	OWNER PROVIDED WASHER	1600W	120-1	(2#12+#12G)1/2"C	20A1P	–	
M5	OWNER PROVIDED DRYER	5KW	240-1	(2#10+#10G)3/4"C	30A2P	–	PROVIDE NEMA 6-30 RECEPT.
							AND MATCHING PLUG
M6	GARBAGE DISPOSER	1/2HP	120-1	(2#12+#12G)1/2"C	20A1P	–	
M7	EXHAUST FAN	105W	120-1	(2#12+#12G)1/2"C	20A1P	–	
M8	FURNACE BLOWER	1/3HP	120-1	(2#12+#12G)1/2"C	20A1P	–	LINE VOLT T-STAT CONTROL
M9	UNIT HEATER	1/100HP	120-1	(2#12+#12G)1/2"C	20A1P	–	LINE VOLT T-STAT CONTROL
M10	UNIT HEATER	1/100HP	120-1	(2#12+#12G)1/2"C	20A1P	–	LINE VOLT T-STAT CONTROL
M11	FURNACE BLOWER	1/2HP	120-1	(2#12+#12G)1/2"C	20A1P	–	LINE VOLT T-STAT CONTROL
M12	OUTDOOR HEATING UNIT	1/5HP	120-1	(2#10+#10G)1/2"C	30A1P	–	PROVIDE INDIVIDUAL O.C.
							PROTECTION FOR EACH UNIT
							PER MFGR. RECOMMENDATIONS
M13	SEWAGE EJECTOR PUMP	1HP	240-1	(2#12+#12G)1/2"C	20A2P	–	
M14	EXHAUST FAN	1/2HP	120-1	(2#12+#12G)1/2"C	20A1P	–	T'STAT CONTROLED
M15	GAS CONTROL PANEL	500W	120-1	(2#12)1/2"C	20A1P	–	
M16	GAS PUMP, INTANK	3/4HP	240-1	(2#12+#12G)1/2"C	20A2P	–	
M17	METERING PUMP	3/4HP	120-1	(2#12+#12G)1/2"C	20A1P	–	
M18	MIXER	1/20HP	120-1	(2#12+#12G)1/2"C	20A1P	–	
M19	GENERATOR FUEL TRANSFER PUMP		120-1	(2#12 + #12G)1/2"C.	20A1P		EXACT SIZE BY GENERATOR SUPPLIER
M20	INFILTRATION PUMP	1HP	240-1	(2#12+#12G)1/2"C	20A2P	VERIFY EXISTANCE	
M21	SEWAGE LIFT STATION PUMP	1HP	240-1	(2#10+#10G)3/4"C	30A2P	–	PROVIDE INDIVIDUAL O.C.
							PROTECTION FOR EACH UNIT
							PER MFGR. RECOMMENDATIONS
M22	GENERATOR JACKET WATER HEATER	1000W	120-1	(2#12+#12G)1/2"C.	20A1P		

DELETED
NOT IN CONTRACT

4 0 4 8
SCALE OF FEET

DESIGNED: M.K.K.	SUB SHEET NO.	TITLE OF SHEET	DRAWING NO.
DRAWN: LSB/DR TECH. REVIEW: JJ DATE: 7/14/89	E-4	DORMITORY BASEMENT ELECTRICAL PLAN (N.I.C.)	117 41073 B
		PKG. NO. GLAC DS 91	SHEET 46 OF 55

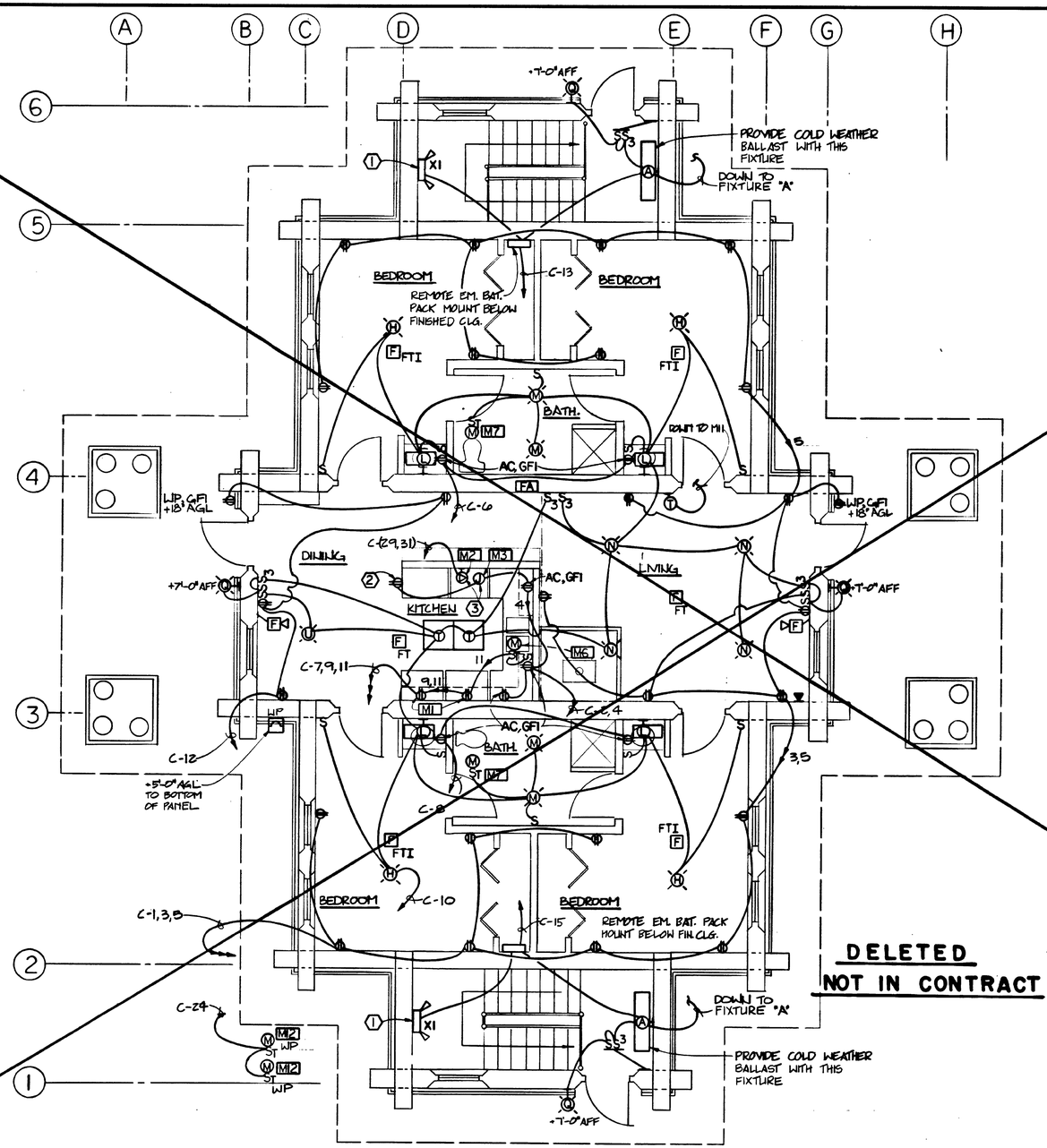

WORK NOTES-THIS SHEET

1. THIS FIXTURE TO BE UNSWITCHED. CONNECT TO LOCAL CIRCUIT AS SHOWN AHEAD OF SWITCHING.
2. LOCATE RECESSED IN SIDE OF CABINET.
3. COORDINATE EXACT ROUGH-IN LOCATION WITH KITCHEN CABINET SUPPLIER PRIOR TO WORK.

DELETED
NOT IN CONTRACT

PANELBOARD "C" SCHEDULE

120/240 VOLTS 1 Ø 3 W 225 A. BUS — A. MAIN C.B. SURFACE MOUNT
SYM. A.I.R. (MAIN C.B. 10,000, BRANCH C.B. 10,000), WITH NEUTRAL BUS, PROVIDE GROUND BUS
BOLT-ON BRANCH C.B. NEMA 1 ENCLOSURE MANUFACTURER AND CAT. NO. GE AQ

LOAD VA	DESCRIPTION	A	B		DESCRIPTION	LOAD VA	BUS LOAD (VA) L1	BUS LOAD (VA) L2
1440	BED RECEPT	1	2		KITCHEN RECEPT	1600	3040	
1260	LIVING RECEPT	3	4		KITCHEN RECEPT	1600		2860
1440	BED RECEPT	5	6		BATH RECEPT	1600	3040	
900	OWNER PROVIDED REFRIG.	7	8		BATH RECEPT	1600		2500
900	OWNER PROVIDED REFRIG.	9	10		LIGHTING-MAIN	1116	2016	
1130	GARBAGE DISPOSER	11	12		DINING RECEPT	900		2030
863	LIGHTING-LOWER	13	14		STORAGE RECEPT	1080	1943	
1099	LIGHTING-LOWER	15	16		STORAGE RECEPT	1080		2179
1140	LIGHTING-LOWER	17	18		OWNER PROVIDED W.SHR.	1600	2740	
360	TTB RECEPT	19	20		OWNER PROVIDED W.SHR.	1600		1960
100	FA	21	22		SPARE		100	
1130	FURNACE BLOWER COIL	23	24	30	OUTDOOR HTNG. UNIT (2)	1340		2470
920	SEWAGE EJECTOR PUMP	20 25	26	30	OWNER PROVIDED DRYER	2500	3420	
920	—	27	28		—	2500		3420
4000	OWNER PROVIDED RTG.	30 29	30	30	OWNER PROVIDED DRYER	2500	6500	
4000	—	31	32		—	2500		6500
900	FUTURE REFIG. RECEPT.	33	34		SPACE		900	
900	FUTURE FREEZER RECEPT.	35	36					900
	SPACE	37	38					
		39	40					
		41	42					
					BUS LOAD TOTALS (KVA)		23.7	24.8
					TOTAL LOAD (KVA)		48.5	
					ESTIMATED MAXIMUM DEMAND (KVA)		41.5	

ALL CIRCUIT BREAKERS ARE 20A, 1P UNLESS NOTED OTHERWISE.

4 0 4 8
SCALE OF FEET

DESIGNED: M.K.K.	SUB SHEET NO.	TITLE OF SHEET	DRAWING NO.
DRAWN: LSB/DR	E-5	DORMITORY MAIN FLOOR ELECTRICAL PLAN (N.I.C.)	117 / 41073B
TECH. REVIEW: JJ			PKG. NO. GLAC DS 91
DATE: 7/14/89			SHEET 47 OF 55

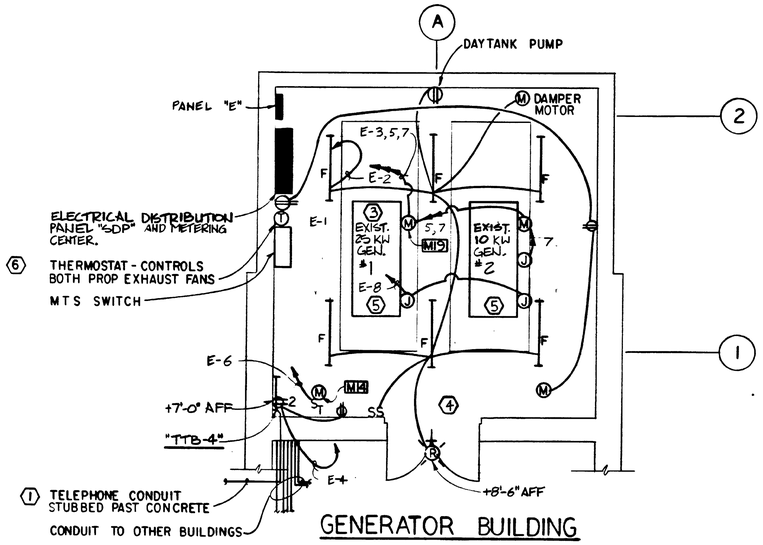

GENERATOR BUILDING

WORK NOTES-THIS SHEET

1. 2" UNDERGROUND EMPTY CONDUIT WITH PULL WIRE FOR TELEPHONE. EXTEND CONDUIT 5'-0" BEYOND BUILDING FOUNDATION, CAP AND STAKE.
2. THIS AREA IS CLASS I DIVISION I. PROVIDE SEAL-OFF FITTINGS AND ALL OTHER REQUIREMENTS PER NEC SECTION 500 AND APPLICABLE NFPA CODES.
3. RELOCATE EXISTING 25KW GENERATOR TO NEW LOCATION ALONG WITH TRANSFER PUMP AND ALL ACCESSORIES FOR A COMPLETE OPERATIONAL SYSTEM.
4. COORDINATE WITH DRAWING M-6 FOR GENERATOR INSTALLATION.
5. GROUND GENERATOR AND FUEL PIPING TO 3/4" × 10'-0" COPPER CLAD DRIVEN GROUND WIRE.
6. THERMOSTAT, PROVIDED AND INSTALLED BY MECHANICAL CONTRACTOR, TO CONTROL FAN MOTOR.

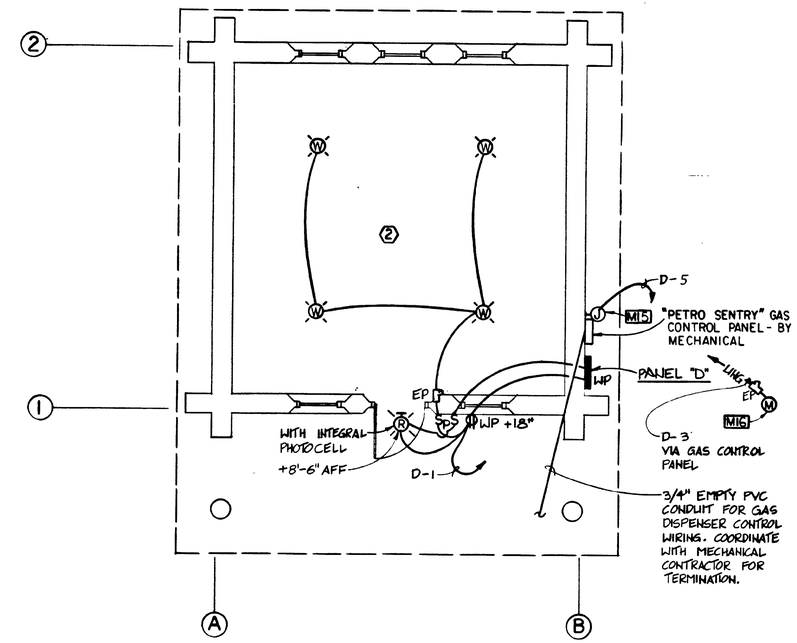

FLAMMABLE STORAGE ELECTRICAL PLAN

PANELBOARD "E" SCHEDULE

120/240 VOLTS 1 Ø 3 W 100 A. BUS — A. MAIN C.B. SURFACE MOUNT
SYM. A.I.R. (MAIN C.B. 10,000, BRANCH C.B. 10,000), WITH NEUTRAL BUS, PROVIDE GROUND BUS BOLT-ON BRANCH C.B. NEMA 1 ENCLOSURE MANUFACTURER AND CAT. NO. G.E. AQ

LOAD VA	DESCRIPTION	A	B	DESCRIPTION	LOAD VA	BUS LOAD (VA) L1	BUS LOAD (VA) L2
540	RECEPTACLES	1	2	LIGHTING INTERIOR	250	790	
1200	GEN. FUEL PUMP	3	4	RECEPTACLE TTB-4	180		1380
1200	GEN. FUEL PUMP	5	6	EXHAUST FAN	1130	2330	
1000	GEN. WATER WATER JKT	7	8	GEN. BATT. CHGR.	600		1600
—	SPARE	9	10	SPARE	—	—	—
	SPACE	11	12	SPACE			
		13	14				
		15	16				
		17	18				
		19	20				
		21	22				
		23	24				
		25	26				
		27	28				
		29	30				
		31	32				
		33	34				
		35	36				
		37	38				
		39	40				
		41	42				
				BUS LOAD TOTALS (KVA)		3.120	2.980
				TOTAL LOAD (KVA)		6.10	
				ESTIMATED MAXIMUM DEMAND (KVA)		6.16	

PANELBOARD "D" SCHEDULE

120/240 VOLTS 1 Ø 3 W 100 A. BUS 40 A. MAIN C.B. SURFACE MOUNT
SYM. A.I.R. (MAIN C.B. 10,000, BRANCH C.B. 10,000), WITH NEUTRAL BUS, PROVIDE GROUND BUS BOLT-ON BRANCH C.B. NEMA 3R ENCLOSURE MANUFACTURER AND CAT. NO. G.E. AQ

LOAD VA	DESCRIPTION	A	B	DESCRIPTION	LOAD VA	BUS LOAD (VA) L1	BUS LOAD (VA) L2
580	LIGHTING	1	2	SWG. LIFT STN. PUMPS	1840	2420	—
1130	GAS TANK PUMP	3	4	—	1840		2970
500	GAS CONTROL PANEL	5	6	SPARE		500	
	SPARE	7	8	SPACE			
		9	10				
	SPACE	11	12				
		13	14				
		15	16				
		17	18				
		19	20				
		21	22				
		23	24				
		25	26				
		27	28				
		29	30				
		31	32				
		33	34				
		35	36				
		37	38				
		39	40				
		41	42				
				BUS LOAD TOTALS (KVA)		2.920	2.970
				TOTAL LOAD (KVA)		5.890	
				ESTIMATED MAXIMUM DEMAND (KVA)		6.04	

4 0 4 8
SCALE OF FEET

DESIGNED: M.K.K.	SUB SHEET NO.	TITLE OF SHEET	DRAWING NO.
DRAWN: LSB	E-6	GENERATOR & FLAMMABLE STORAGE BUILDING ELECTRICAL PLANS	117 / 41073 B
TECH. REVIEW: JJ			PKG. NO. DS 91
DATE: 7/14/89			SHEET 48 OF 55

LIGHTING FIXTURE SCHEDULE

TYPE	LAMPS QTY.	LAMPS CAT. NO.	DESCRIPTION	VOLT	MOUNTING	MANUFACTURER, CATALOG NUMBER
B	2	F40WW/ RS/WM	FLUORESCENT WRAPAROUND	120	PENDANT +8'-0" TO	PROGRESS P7250-35-P7214ES PENDANT LENGTH AS REQUIRED
					BOTTOM OF FIXTURE	
C	2	F40WW/ RS/WM	48" FLUORESCENT OPEN TUBE STRIP	120	SURFACE	MIDWEST S-240R-120-ES
D	2	F40WW/ RS/WM	FLUORESCENT WRAPAROUND	120	SURFACE	PROGRESS P7250-35-P7214ES
F	2	F40CW/ RS/WM	48" FLUORESCENT OPEN TUBE STRIP WITH SYMMETRIC REFLECTOR AND	120	SURFACE	MIDWEST S-240R-120-SR-CW
			0° BALLAST			
G	2	F20CW/ RS/WM	48" FLUORESCENT ENCLOSED AND GASKETED RATED FOR DAMP	120	SURFACE	MIDWEST ST-240R-CW-120
			LOCATION WITH 0° BALLAST			
K	1	FLB15	PORCELAIN KEYLESS WITH COMPACT FLUORESCENT LAMP	120	SURFACE	PASS & SEYMOUR
N	1		DECORATIVE PENDANT WITH COMPACT FLUORESCENT LAMP AND ADAPTER	120	PENDANT +8'-0" TO	REJUVENATION FIXTURE CXZIZ-C WITH VERDE ANTIQUE FINISH
					BOTTOM OF FIXTURE	AND CREAM GLASS
Q	1	40W A19	EXTERIOR DECORATIVE WALL BRACKET	120	WALL	REJUVENATION FIXTURE WXZIZ-C WITH VERDE ANTIQUE FINISH *
			FIXTURE TO BE DAMP LOCATION RATED			AND CREAM GLASS
R	1	18W LOW PRESSURE	EXTERIOR HID WALL BRACKET	120	WALL	BENJAMIN OLW-218-120C
		SODIUM				
V	1	75W A19	DECORATIVE PENDANT SAME AS TYPE "N"	120	PENDANT +8'-0" TO	REJUVENATION FIXTURE CXZIZ-C WITH VERDE ANTIQUE FINISH
			FIXTURE TO BE DAMP LOCATION RATED		BOTTOM OF FIXTURE	AND CREAM GLASS
W	1	100A	EXPLOSION PROOF INCANDESCENT	120	SURFACE	BENJAMIN 7612-CX
A	2	F40WW/ RS/WM	48" LONG FLUORESCENT WALL BRACKET	120	WALL +7'-0"	PROGRESS P7157ES
Y	1	40 W WITH UNIT	FLASHING LIGHT WITH RED LENS	120	WALL	FEDERAL SIGNAL 400 F

* THESE FIXTURES ARE SUSPENDED WITH NO CHAIN OR AS FEW LINKS AS POSSIBLE.

WORK NOTES THIS SHEET

1. #6 CONDUCTOR TO 3/4" X 10'-0" COPPER CLAD GROUND ROD AND TO FUEL PIPING FOR GENERATOR GROUND.

3. THIRD POLE IS PROVIDED FOR FUTURE USE. DO NOT CONNECT CONDUCTORS AT THIS TIME.

4. PROVIDE AND INSTALL GE TYPE I-70-S WATT-HOUR METER AND SOCKET. SELF CONTAINED SINGLE PHASE INDUCTION TYPE. METER SHALL BE DIRECT READING. MOUNT IN CABINET NEXT TO DISTRIBUTION PANEL.

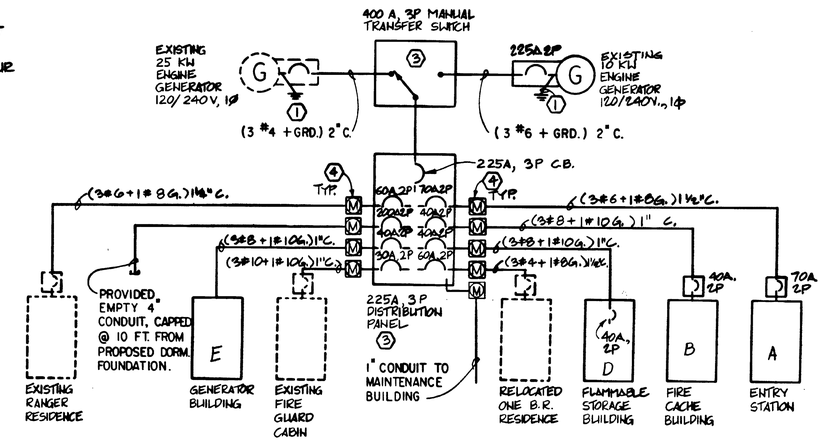

ELECTRICAL ONE-LINE DIAGRAM

NO SCALE

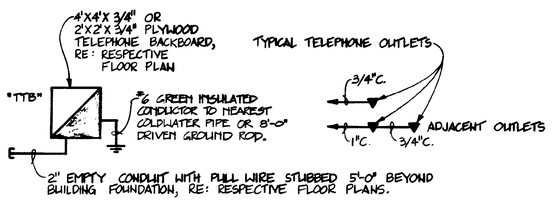

TELEPHONE SYSTEM ONE-LINE DIAGRAM, TYPICAL

NO SCALE

NOTE: PROVIDE ALL CONDUIT WITH PULL WIRE.

DESIGNED: M.K.K.	SUB SHEET NO.	TITLE OF SHEET	DRAWING NO. 117 / 41073B
DRAWN: LSB/GWO	E-7	ONE-LINE DIAGRAMS AND SCHEDULES	PKG. NO. GLAC DS 91
TECH. REVIEW: JJ			SHEET 49 OF 55
DATE: 7/14/89			

NATIONAL PARK SERVICE LEGEND

BASIC CONTACT ASSEMBLIES

TRANSFER SWITCH
ATS — ATS AUTOMATIC TRANSFER SWITCH
MTS MANUAL TRANSFER SWITCH

CIRCUIT PROTECTORS

FUSE (GENERAL)

ST — CIRCUIT BREAKER (GENERAL), ST INDICATES SHUNT TRIP

GROUND

TRANSFORMERS, INDUCTORS AND WINDINGS

TRANSFORMER

CURRENT TRANSFORMER

POTENTIAL TRANSFORMER (METERING)

MISCELLANEOUS

EP — CONDUIT SEAL, EP INDICATES EXPLOSION PROOF

HEATER

ARCHITECTURAL CIRCUITING

WIRING CONCEALED IN CEILING OR WALL

WIRING CONCEALED IN FLOOR

WIRING (EXPOSED)

1,2 — BRANCH CIRCUIT HOME RUN TO PANELBOARD. ARROWS INDICATE NUMBER OF CIRCUITS. NUMERAL AT EACH ARROW IDENTIFIES CIRCUIT NUMBER

WIRING TURNED UP

WIRING TURNED DOWN

ELECTRICAL EQUIPMENT

(F) FAN

(M) MOTOR

(G) GENERATOR

(PC) PHOTO CELL RELAY

(T) THERMOSTAT

[EH] ELECTRIC HEATER

PANELBOARDS, SWITCHBOARDS AND RELATED EQUIPMENT

SURFACE MOUNTED PANELBOARD

FLUSH MOUNTED PANELBOARD

DISCONNECT SWITCH

MOTOR STARTER

COMBINATION STARTER AND DISCONNECTING MEANS

ELECTRICAL OUTLETS

SINGLE RECEPTACLE

DUPLEX RECEPTACLE

TRIPLEX RECEPTACLE

SINGLE SPECIAL–PURPOSE RECEPTACLE

SINGLE SPECIAL–PURPOSE CONNECTION

(J) JUNCTION BOX

TELEPHONE OUTLET

SQUARE AROUND ANY SYMBOL INDICATES FLOOR MOUNTED

LIGHTING FIXTURES

(A)a — CEILING OR PENDANT MOUNTED INCANDESCENT, MERCURY–VAPOR OR SIMILAR LIGHT FIXTURE. A INDICATES FIXTURE TYPE AND a INDICATES SWITCHING CIRCUIT.

[(A)] CEILING OR PENDANT MOUNTED FLUORESCENT LIGHT FIXTURE

(X) CEILING OR PENDANT MOUNTED EXIT LIGHT. ARROW INDICATES DIRECTION TO EXIT.

(A) WALL MOUNTED LIGHT FIXTURE

A a — FLUORESCENT STRIP LIGHT

SWITCHES

S SINGLE–POLE SWITCH

S_3 THREE–WAY SWITCH

S_4 FOUR–WAY SWITCH

S_K KEY OPERATED
MS MANUAL MOTOR STARTER
P PILOT LIGHT
D DIMMER
CL CLOCK
a SWITCHING

FIRE AND INTRUSION FIXTURES

[FA] FIRE ALARM CONTROL PANEL

MAGNETIC SWITCH

[D] DOOR HOLDER, MAGNETIC

[F] FIRE DETECTOR
FT FIXED TEMPERATURE
RA RATE ANTICIPATION
RR RATE OF RISE
I IONIZATION
PE PHOTOELECTRIC

[F] HORN, F INDICATED FIRE AND I INDICATES INTRUSION

[I] BELL

[MS] MANUAL STATION

NOTE: SUBSCRIPT NUMBERS OR LETTERS ARE USED TO FURTHER DEFINE SYMBOLS.

SITE (ELECTRICAL)

U3ØS — ELECTRICAL LINE

U UNDERGROUND
A AERIAL
P PRIMARY
S SECONDARY

1Ø SINGLE PHASE
3Ø THREE PHASE
T TELEPHONE

△ POLE MOUNTED TRANSFORMER

[T] PAD MOUNTED TRANSFORMER

GROUND ROD

ABBREVIATIONS (ELECTRICAL)

AFF	ABOVE FINISHED FLOOR
AGL	ABOVE GRADE LEVEL
C	CONDUIT
EF	EXHAUST FAN
EMT	ELECTRICAL METALLIC TUBING
EP	EXPLOSION PROOF
GFI	GROUND FAULT INTERRUPTER
KV	KILOVOLTS
KVA	KILOVOLT AMPERES
KW	KILOWATTS
NIC	NOT IN CONTRACT
PC	PULL CHAIN
PVC	POLYVINYL CHLORIDE
RGS	RIGID GALVANIZED STEEL
SF	SUPPLY FAN
ST	SHUNT TRIP
UNG	UNGROUNDED
WP	WEATHERPROOF

SUPPLEMENTAL ELECTRICAL

[F] FTI — COMBINATION FIXED TEMP. HEAT DETECTOR AND IONIZATION SMOKE DETECTOR

(M) UTILITY METER

CONNECTION TO PRE–WIRED EQUIPMENT LUGS.

TTB — TELEPHONE TERMINAL BACKBOARD (PLYWOOD)

EMERGENCY LIGHT FIXTURE AS NOTED

ST THERMAL OVERLOAD SWITCH

AC 8" ABOVE COUNTER TOP

WORK NOTE DESIGNATION

CB CIRCUIT BREAKER

2 FOURPLEX RECEPTACLE

NEMA 3R ENCLOSED CIRCUIT BREAKER

BFG BELOW FINISHED GRADE

G GROUND

(P) PULL BOX

DESIGNED: M.K.K.	SUB SHEET NO.	TITLE OF SHEET	DRAWING NO. 117 / 41,073B
DRAWN: KDB	E-8	LEGEND	PKG. NO. GLAC DS 91
TECH. REVIEW: JJ			SHEET 50 OF 55
DATE: 7/14/89			

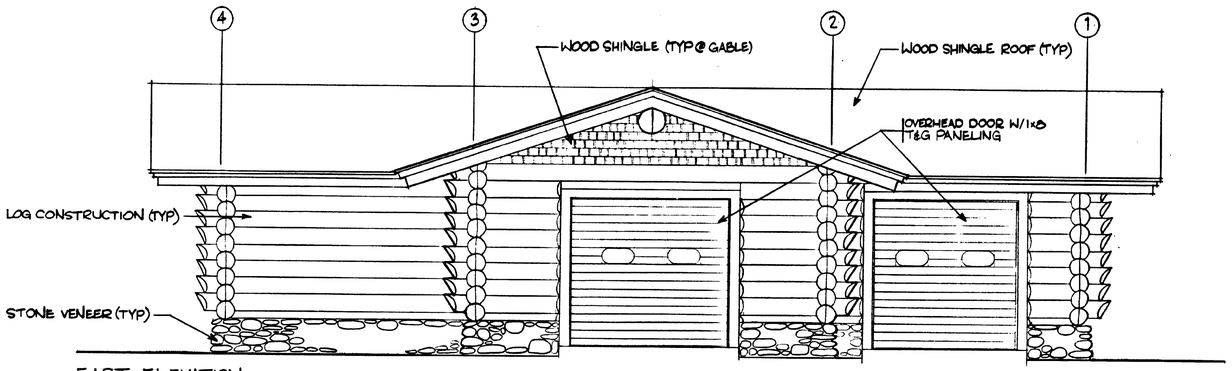

EAST ELEVATION
SCALE A

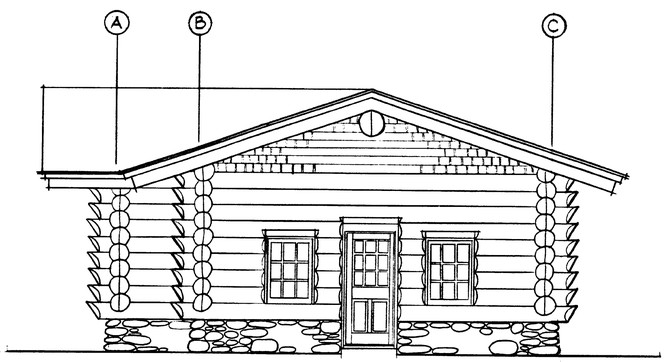

NORTH ELEVATION
SCALE A

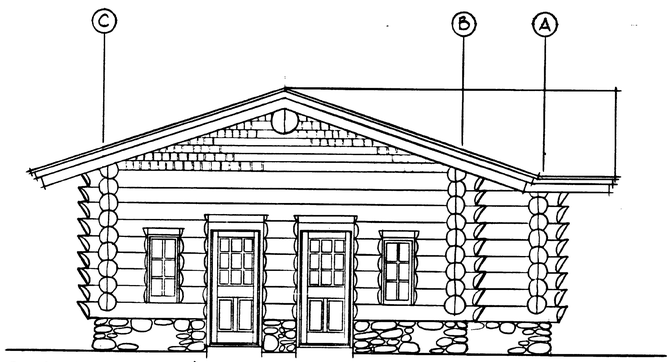

SOUTH ELEVATION
SCALE A

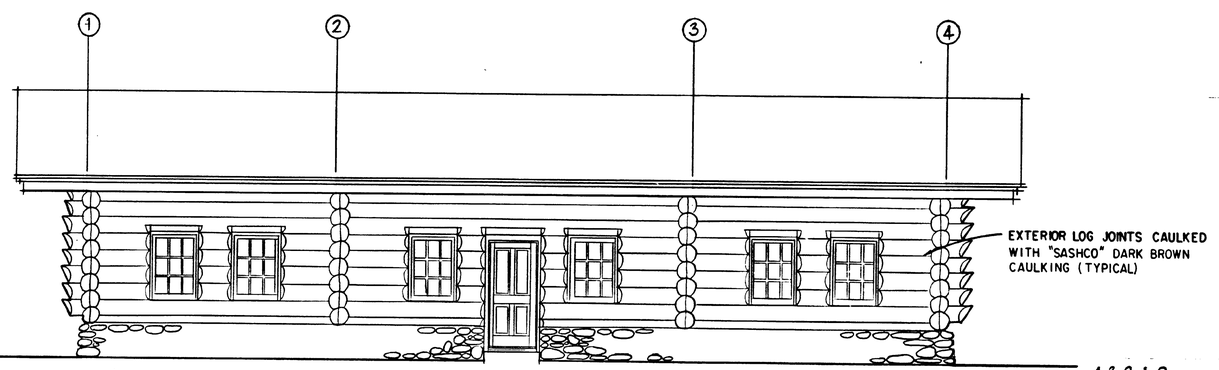

WEST ELEVATION
SCALE A

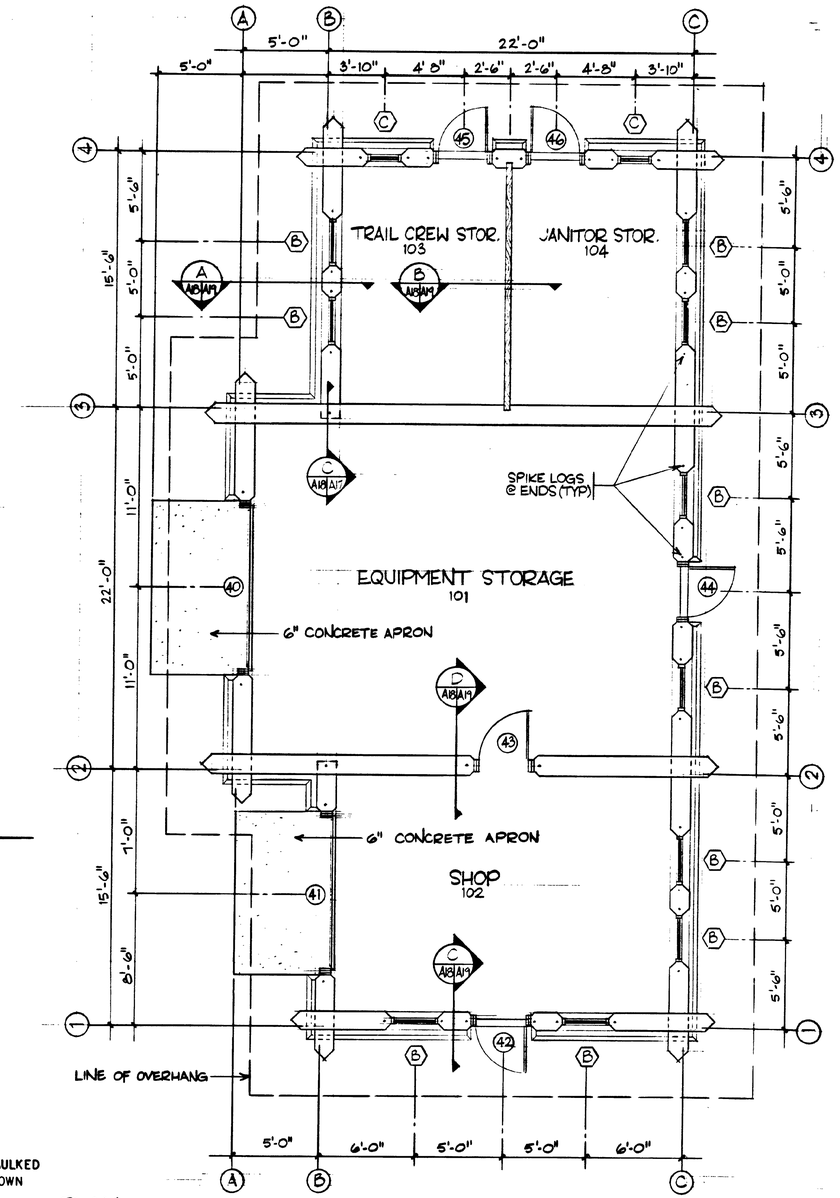

PLAN
SCALE A

43 2 1 0 4 8
SCALE A

NORTH

DESIGNED: ANDY BECK DRAWN: KO TECH. REVIEW: EJC DATE: 8-1-89	SUB SHEET NO. A-18	TITLE OF SHEET MAINTENANCE BLDG ·ELEVATIONS ·PLAN	DRAWING NO. 117 41,073B PKG. NO. GLAC 05 91 SHEET 51 OF 55

DOOR SCHEDULE

MARK	SIZE	TYPE	HDW GRP	DETAILS HEAD	DETAILS SILL	DETAILS JAMB	REMARKS
40	10°×9°	SEE EXT. ELEVATION	14	D/A20		F-A17	
41	9°×9°	↓	↓	↓		↓	
42	3°×7°	C	1	A/A15	E/A15SIM	J/A15SIM K/A15SIM	
43	3°×7°	A	6	A/A15SIM		J/A15SIM B/A16SIM	
44	3°×6°	A	1	B/A15	E/A15SIM	J/A15SIM K/A15SIM	
45	3°×7°	C	1	A/A15			
46	↓	↓	1	↓	↓	↓	

WINDOW SCHEDULE

MARK	SIZE W×H	TYPE	DETAILS HEAD	DETAILS SILL	DETAILS JAMB	REMARKS
C	1'-8½"×3'-4"	CASEMNT	D/A15	H/A15	L/A15SIM	W-CM2040
B	2'-6"×3'-4"	↓	↓	↓	↓	W-CM3240

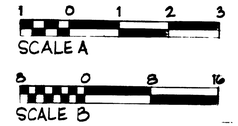

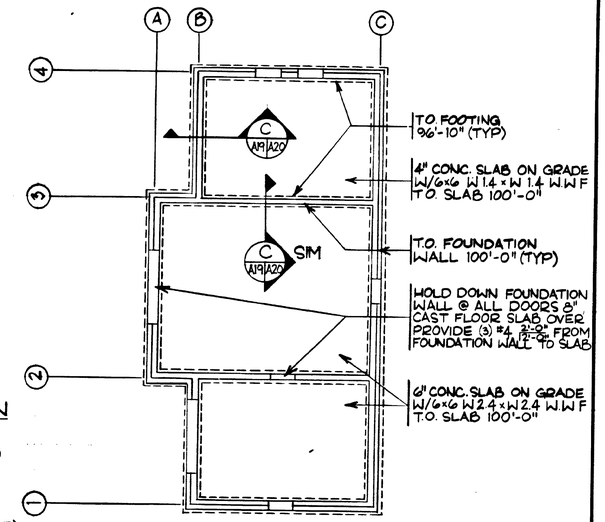

FOOTING & FOUNDATION PLAN
SCALE B

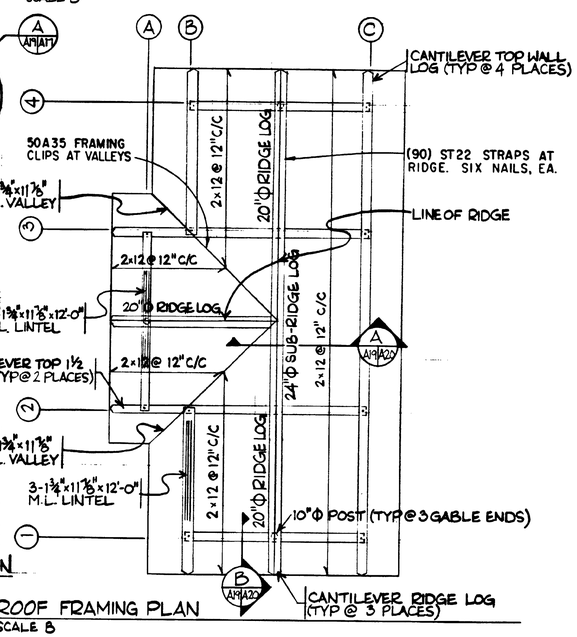

ROOF FRAMING PLAN
SCALE B

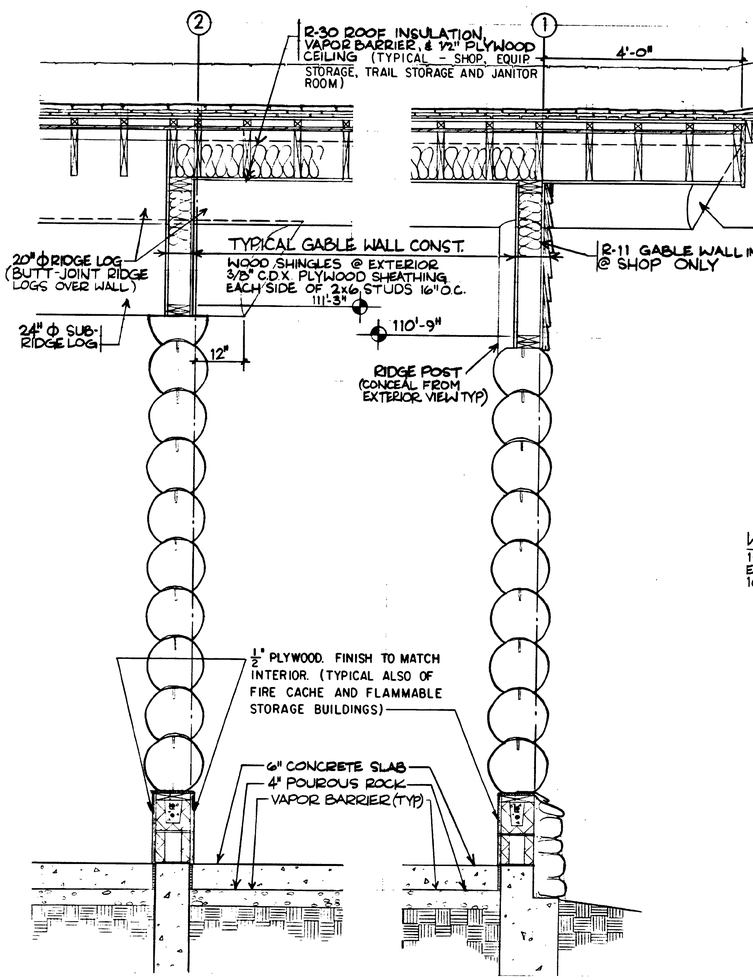

WALL SECTION D A18/A19
SCALE A

WALL SECTION C A18/A19
SCALE A

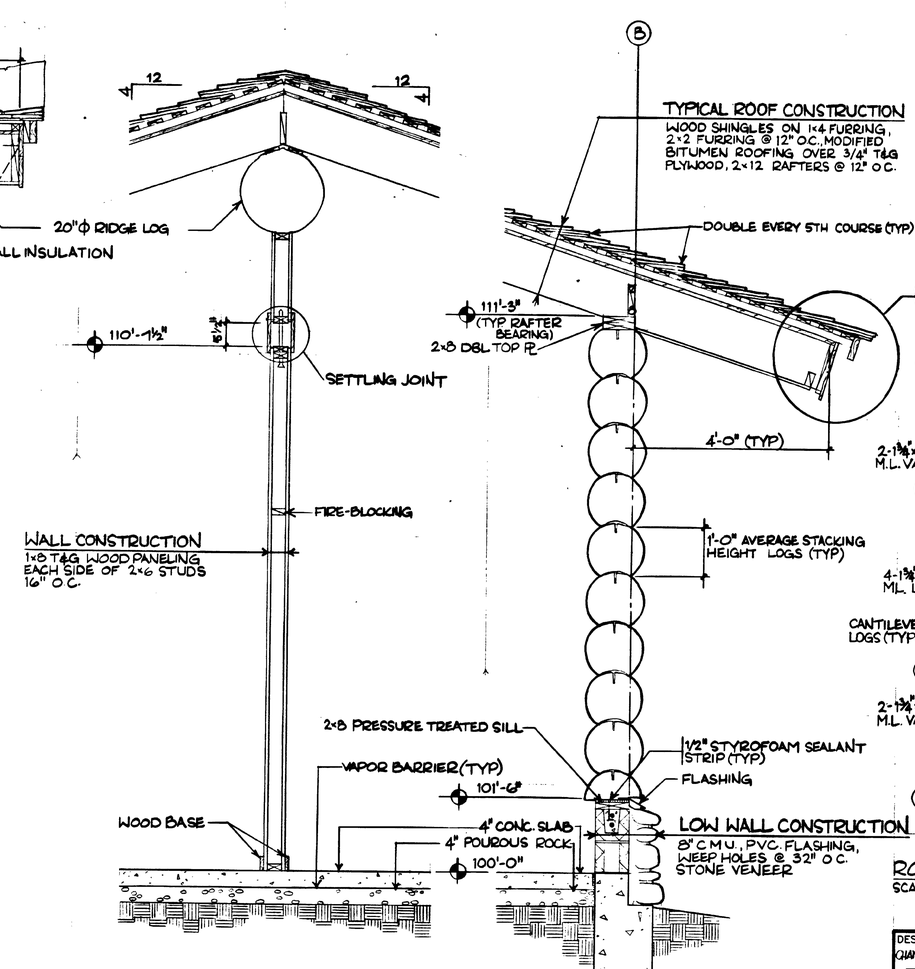

WALL SECTION B A18/A19
SCALE A

WALL SECTION A A18/A19
SCALE A

DESIGNED: CHAMBERLIN/BECK	SUB SHEET NO.	TITLE OF SHEET	DRAWING NO. 117 41,073B
DRAWN: K.O.	A-19	MAINTENANCE BLDG ·WALL SECTIONS ·ROOF FRAMING ·FOUNDATION PLAN ·SCHEDULES	PKG. NO. GLAC DS 91
TECH. REVIEW: E.J.C.			SHEET 52 OF 55
DATE: 8·7·89			

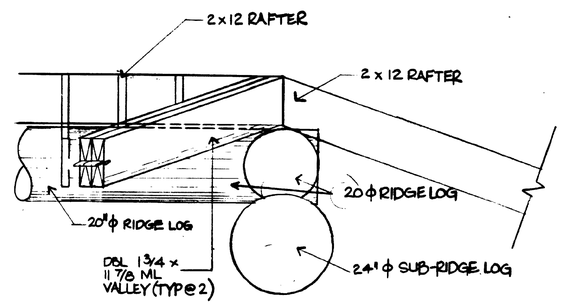

A A19 A20 RIDGE INTERSECTION
SCALE A

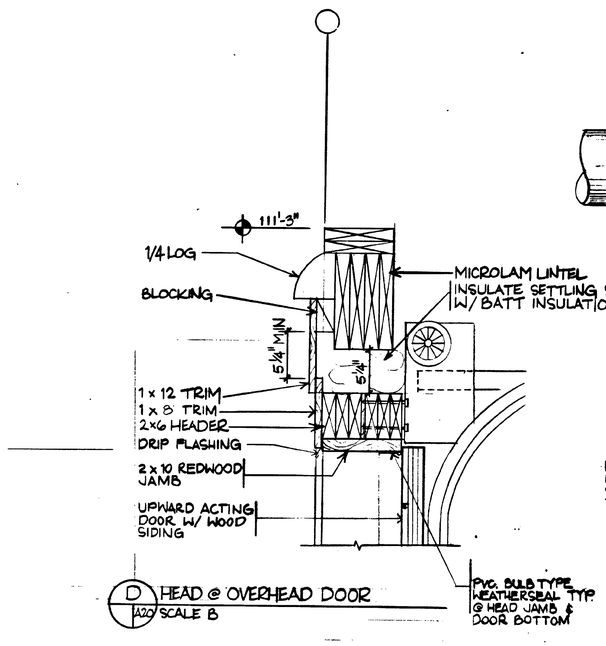

D A20 HEAD @ OVERHEAD DOOR
SCALE B

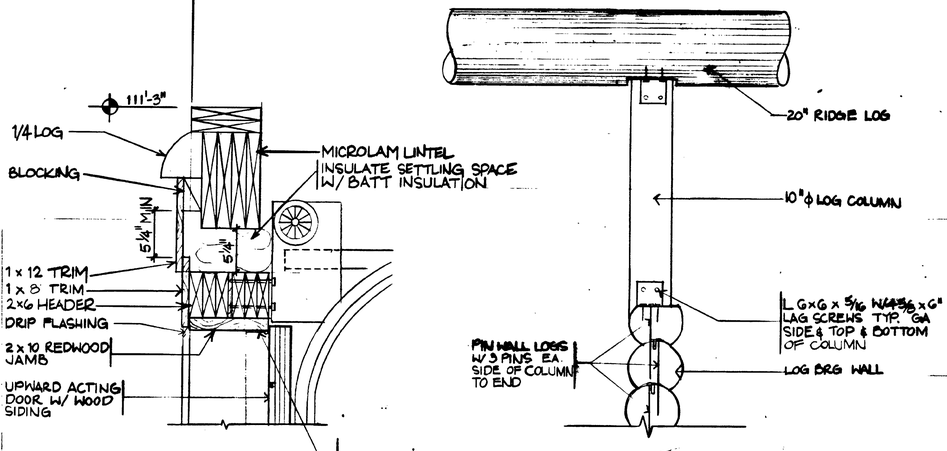

B A19 A20 COLUMN @ GABLE WALL
SCALE A

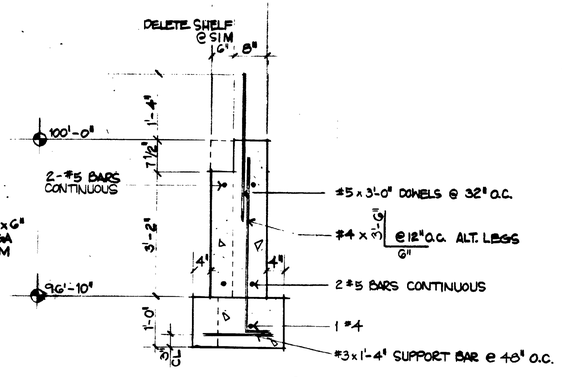

C A19 A20 FOUNDATION DETAIL
SCALE A

1 0 1 2
SCALE B

1 0 1 2 3
SCALE A

DESIGNED: CHAMBERLIN/BECK DRAWN: M.B. TECH. REVIEW: E.J.C. DATE: 8-7-89	SUB SHEET NO. A-20	TITLE OF SHEET MAINTENANCE BLDG ·DETAILS	DRAWING NO. 117 41,073B PKG. NO. GLAC DS 91 SHEET 53 OF 55

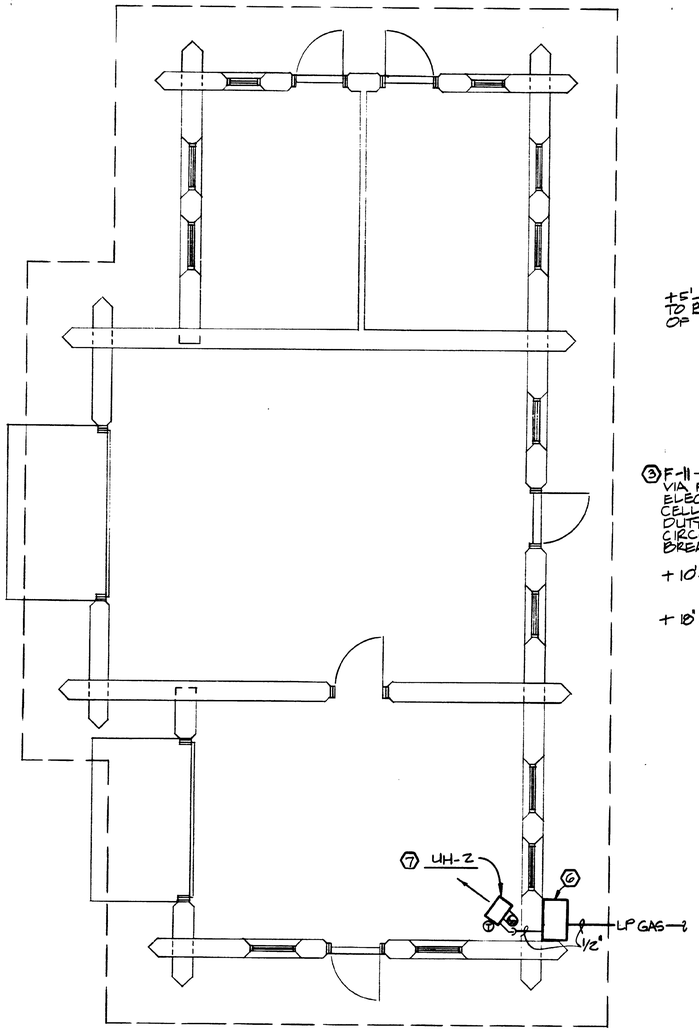

MAINTENANCE BUILDING
MECHANICAL PLAN

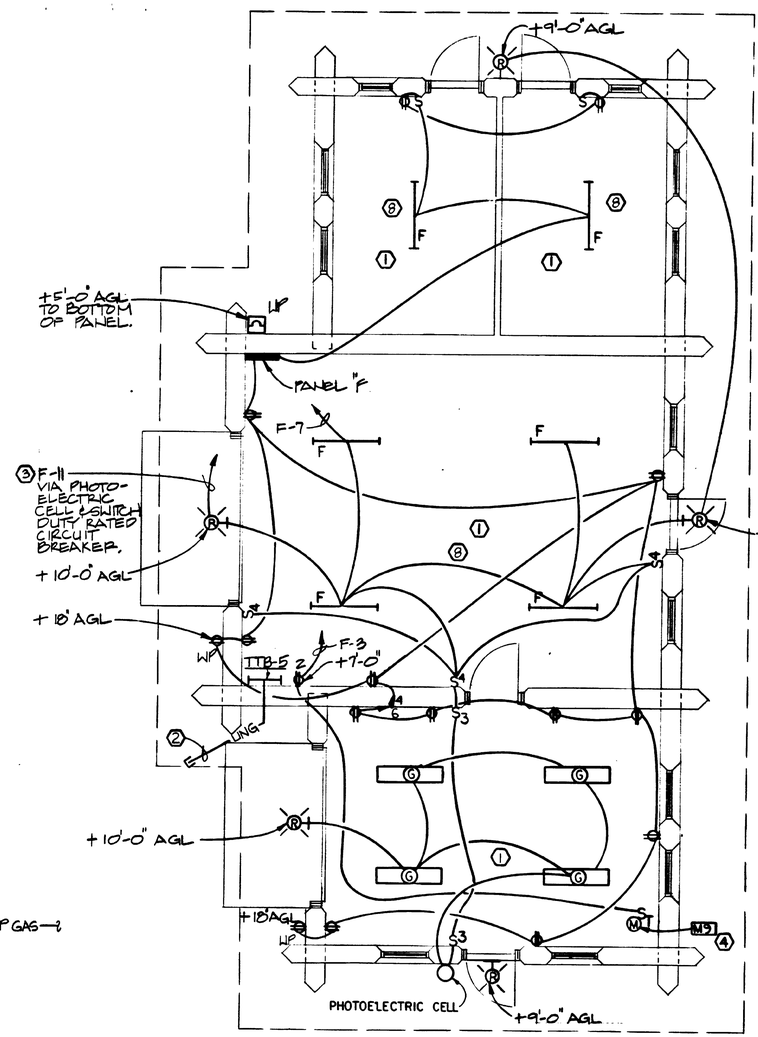

MAINTENANCE BUILDING
ELECTRICAL PLAN

PANELBOARD "F" SCHEDULE

120/240 VOLTS 1 Ø 3 W 100 A. BUS — A. MAIN C.B. SURFACE MOUNT
SYM. A.I.R. (MAIN C.B. 10,000, BRANCH C.B. 10,000), WITH NEUTRAL BUS, PROVIDE GROUND BUS BOLT ON BRANCH C B NEMA 1 ENCLOSURE MANUFACTURER AND CAT. NO. G.E. AQ

LOAD VA	DESCRIPTION	A	B	DESCRIPTION	LOAD VA	BUS LOAD (VA) L1	BUS LOAD (VA) L2
75	UNIT HEATER	1	2	STORAGE RECEPT.	1080	1155	-
360	TTB RECEPTACLE	3	4	SHOP RECEPTACLES	720	-	1080
	SPARE	5	6	↓	720	720	-
500	LIGHTING - INSIDE	7	8	SPARE		-	500
	SPARE	9	10			-	-
250	LIGHTING - OUTSIDE	* 11	12	↓		-	250
	SPACE	13	14	SPACE			
		15	16				
		17	18				
		19	20				
		21	22				
		23	24				
		25	26				
		27	28				
		29	30				
		31	32				
		33	34				
		35	36				
		37	38				
		39	40				
		41	42				
ALL CIRCUIT BREAKERS ARE 20A., 1P UNLESS NOTED OTHERWISE.				BUS LOAD TOTALS (KVA)		1.88	1.83
				TOTAL LOAD (KVA)		3.71	
				ESTIMATED MAXIMUM DEMAND (KVA)		3.88	

* PROVIDE SWITCH DUTY RATED CIRCUIT BREAKERS.

WORK NOTES THIS SHEET

① ALL RECEPTACLES IN THIS ROOM SHALL BE AT +43" AFF. EXCEPT AS NOTED OTHERWISE.

② PROVIDE 2" UNDERGROUND EMPTY CONDUIT WITH PULL WIRE FOR TELEPHONE. EXTEND CONDUIT 5'-0" BEYOND BUILDING FOUNDATION, CAP & STAKE.

③ PROVIDE PHOTOELECTRIC CELL TORK MODEL # 2101. MOUNT ON ROOF IN A LOCATION TO PROVIDE UNOBSTRUCTED NORTHERN VIEW.

④ REFER TO SHEET E-4 FOR MECHANICAL EQUIPMENT SCHEDULE.

⑤ PROVIDE AND INSTALL GE TYPE I-70-S WATT-HOUR METER AND SOCKET, SELF CONTAINED SINGLE PHASE INDUCTION TYPE. METER SHALL BE DIRECT READING. MOUNT IN CABINET NEXT TO DISTRIBUTION PANEL.

⑥ LP GAS SERVICE EQUIPMENT. SEE DETAILS SHEET M-9.

⑦ UH-2 UNIT HEATER. 4" FL-1 FLUE UP THROUGH ROOF TO CAP. PROVIDE 12" CLEAR TO CEILING. SEE DETAIL "J" ON SHEET M7.

⑧ LIGHT FIXTURES IN THIS AREA ARE TO BE PROVIDED WITH 0° BALLASTS.

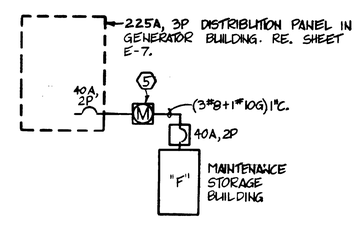

ELECTRICAL ONE-LINE DIAGRAM
NO SCALE

30 0 30 60
SCALE OF FEET

NORTH

DESIGNED: M.K.K	SUB SHEET NO.	TITLE OF SHEET	DRAWING NO.
DRAWN: GWO/DR	ME-1	MAINTENANCE BUILDING MECHANICAL PLAN ELECTRICAL PLAN	117 / 41073B
TECH. REVIEW: JJ			PKG. NO. GLAC DS 91 — SHEET 54 OF 55
DATE: 8/9/89			

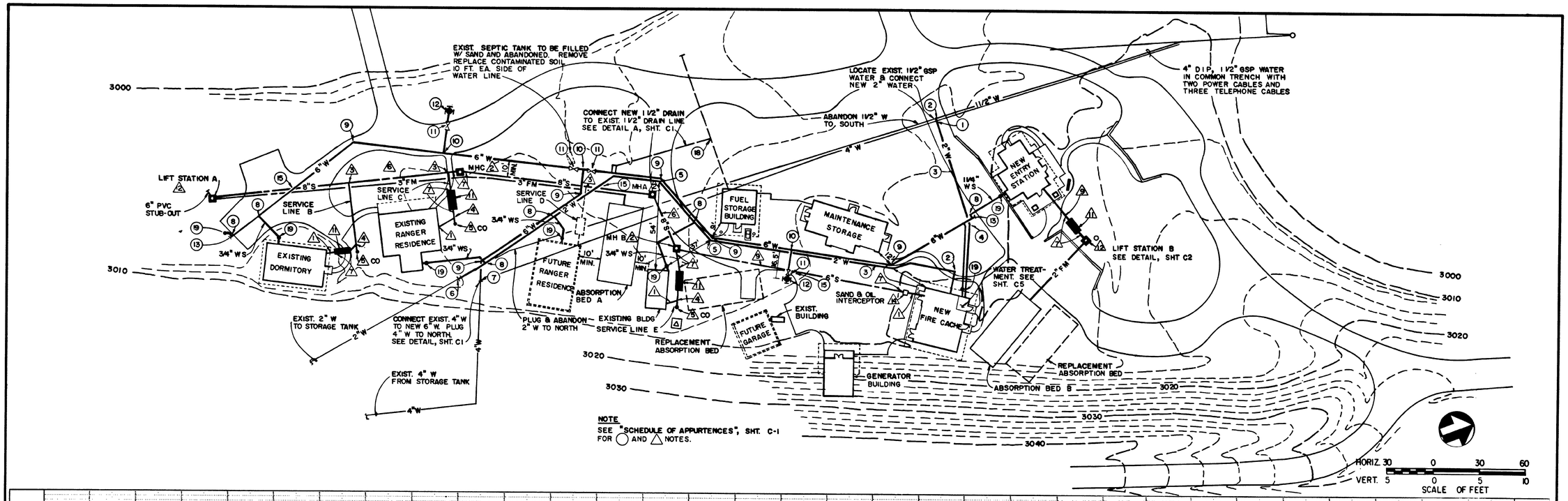

DESIGNED: M/M	SUB SHEET NO.	TITLE OF SHEET	DRAWING NO. 117
DRAWN: W E A	C-8	POLEBRIDGE DEVELOPMENT	41,073B
TECH. REVIEW:		WATER AND SEWER PLAN	PKG. NO. DS 91
DATE: 12/90			SHEET 55 OF 55

☆U.S. GOVERNMENT PRINTING OFFICE: 875-099

1996 GLAC_117_60274_A UST REMOVAL AND GENERATOR BUILDING MODIFICATION

P.2 UTILITY MAPS APPEAR ACCURATE; THIS PROJECT REMOVED AN UNDERGROUND TANK AND ADDED AN EXTERIOR RETAINING WALL TO THE 1449 GENERATOR BUILDING WITH DEISEL TANKS - THESE TANKS WERE LATER REMOVED - NOW, ONLY FUEL INFASTRUCTURE IS IN FUEL TANK ENCLOSURE FENCE

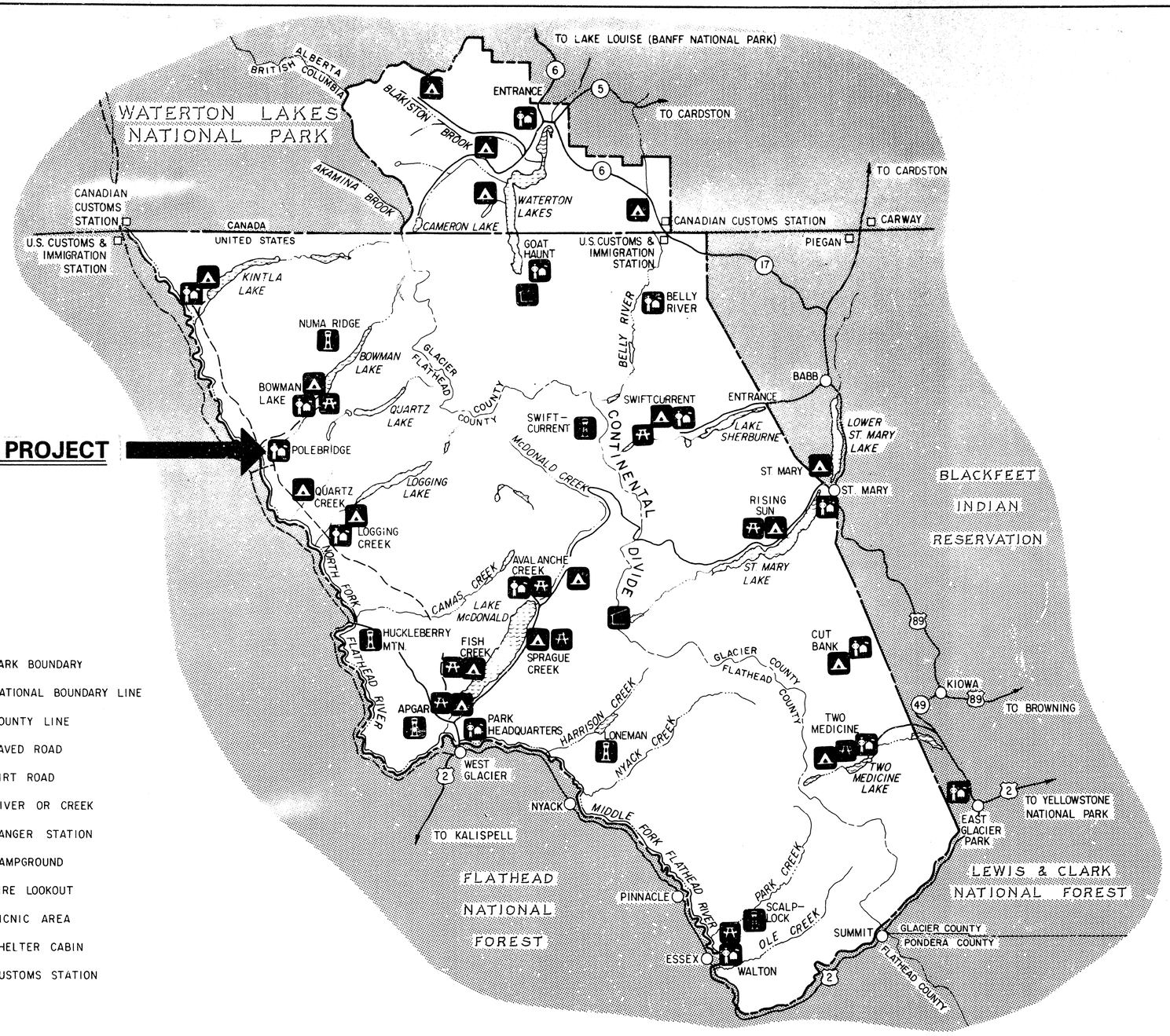

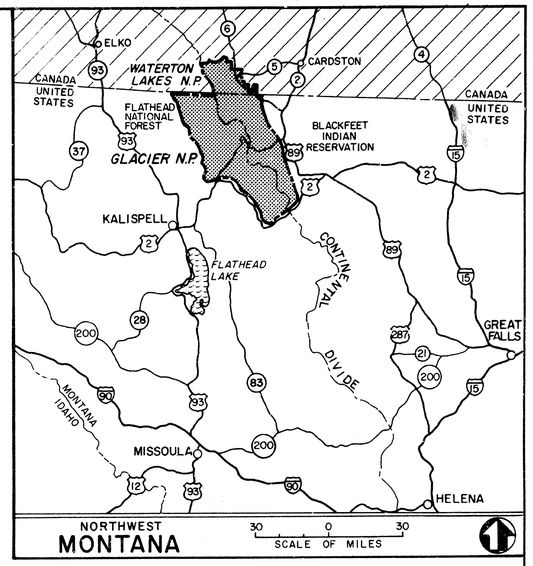

LEGEND

- PARK BOUNDARY
- NATIONAL BOUNDARY LINE
- COUNTY LINE
- PAVED ROAD
- DIRT ROAD
- RIVER OR CREEK
- RANGER STATION
- CAMPGROUND
- FIRE LOOKOUT
- PICNIC AREA
- SHELTER CABIN
- CUSTOMS STATION

INDEX

1. COVER SHEET
2. AREA PLAN
3. DETAILS
4. DETAILS

RECORD DRAWINGS OCTOBER, 27, 1986

REDUCED SIZE REPRODUCTION

SCALE OF MILES 4 0 4 8

SCALE OF KILOMETERS 6 0 6 12

UNITED STATES DEPARTMENT OF THE INTERIOR NATIONAL PARK SERVICE DENVER SERVICE CENTER	DESIGNED: W. NIELSEN DRAWN: DRAFTING BR. TECH REVIEW: STAFF DATE: 5/96	TITLE OF DRAWING: UST REMOVAL AND MODIFICATION LOCATION WITHIN PARK: POLEBRIDGE NAME OF PARK: GLACIER NATIONAL PARK WATERTON-GLACIER INTERNATIONAL PEACE PARK REGION: ROCKY MOUNTAIN · COUNTY: FLATHEAD · STATE: MONTANA	DRAWING NO. 117 / 60,274A PKG. NO. / SHEET 1 OF 4

BASIC DATA 117/20,013, 7/74, COVER REVISED/REDRAWN 2/84

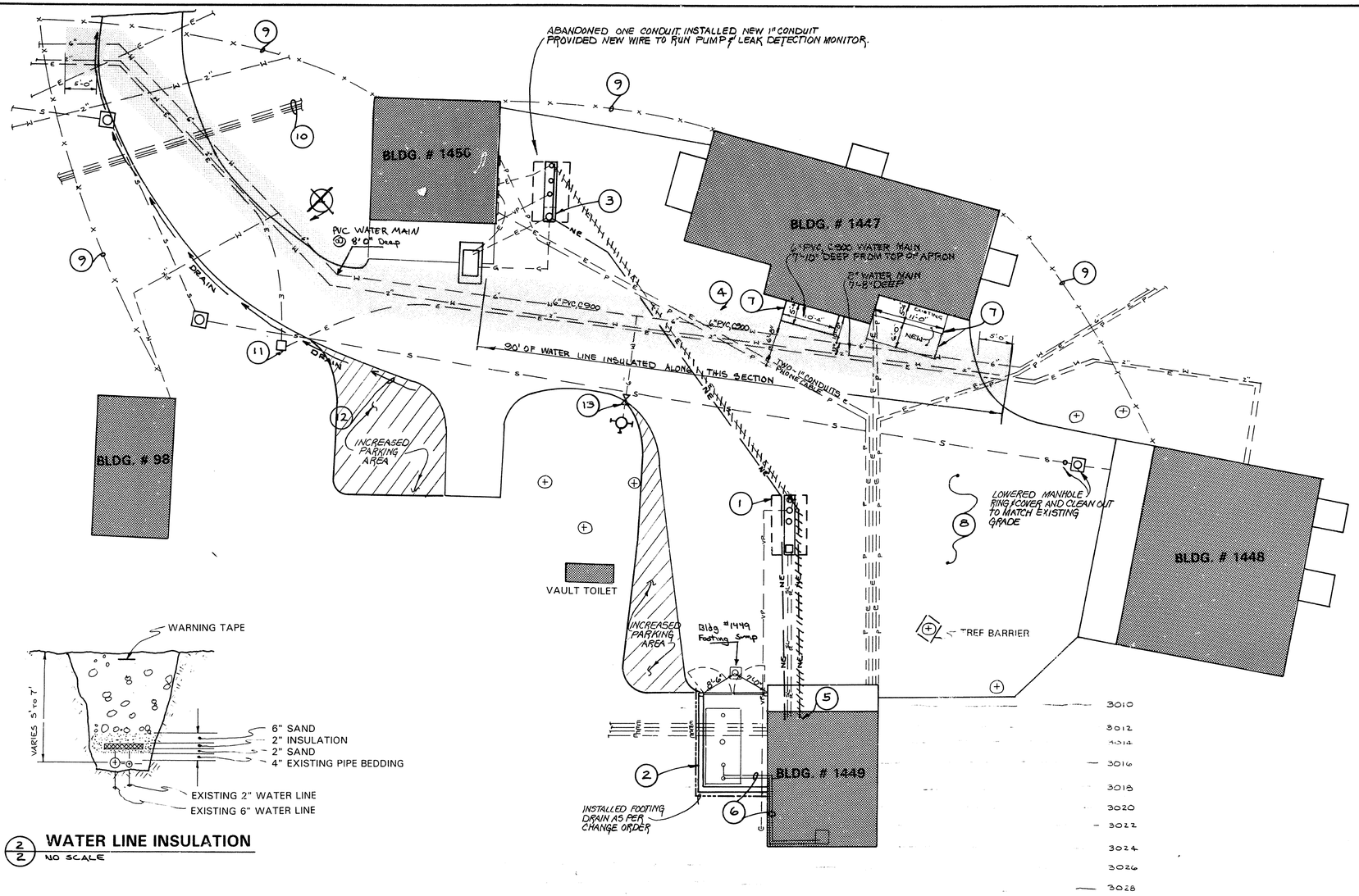

1/2 AREA PLAN
SCALE 1"=10'

2/2 WATER LINE INSULATION
NO SCALE

LEGEND

1. REMOVE EXISTING 2,000 GALLON DIESEL UST, VENT PIPE, SUPPLY AND RETURN LINES. SEE SPECIFICATIONS FOR DETAILS ON DISPOSAL OF TANK AND ASSOCIATED EQUIPMENT.
2. CONSTRUCT NEW CONCRETE PAD AND RETAINING WALLS FOR NEW ABOVE GROUND DIESEL STORAGE TANK. TANK WILL BE SUPPLIED BY NATIONAL PARK SERVICE.
3. MODIFY EXISTING NOLEAD GASOLINE UST. INSTALL NEW CONTAINMENT PUMP SUMP, AND NEW LEAK DETECTION PROBE. INSTALL NEW WATER TIGHT MANHOLE LID.
4. EXCAVATE EXISTING WATER LINES AND INSTALL RIGID FOAM INSULATION. WATER LINE WAS FOUND AT 8FT±. INSULATION WAS NOT INSTALLED PER CHANGE ORDER, EXCEPT WHERE INDICATED.
5. RELOCATE EXISTING LEAK DETECTION MONITOR FROM OUTSIDE OF BLDG. # 1450 TO INSIDE BLDG # 1449.
6. REPLUMB EXISTING DAY TANK TO NEW 2,000 GALLON DIESEL STORAGE TANK.
7. REMOVE EXISTING CONCRETE PADS AND INSTALL NEW 6" THICK CONCRETE PADS WITH # 4 REBAR AT 12" O.C. BOTH WAYS. SLOPE NEW PAD 6" FORM EXISTING FINISH FLOOR ELEVATION IN BUILDING..
8. REGRADE EXISTING PARKING AREA,(APPROXIMATELY 4,200 SQ. FT.) REMOVE AN AVERAGE OF 12" OF EXISTING MATERIAL AND INSTALL 4" OF NEW 3/4" CRUSHED ROAD BASE MATERIAL. SEE DRAWING SHEET #4 FOR NEW GRADING PLAN.
9. INSTALL ORANGE PLASTIC CONSTRUCTION FENCE.(SITE FENCE)
10. 4" DIP, 1 1/2" GSP WATER IN COMMON TRENCH WITH TWO POWER CABLES AND THREE TELEPHONE CABLES.
11. RAISE 32"x18" PULL BOX 6". USE 2x6 TREATED LUMBER
12. REGRADE APPROXIMATELY 150 LF. OF DITCH TO DRAIN
13. TWIST UP VALVE BOX APPROXIMATELY 6"

—S—S—	SEWER LINE
—W—W—	WATER LINE
—E—E—	ELECTRIC LINE
—P—P—	PHONE LINE
—NE—NE—	NEW ELECTRIC LINE FOR UST MONITORING
—SL—SL—	SUPPLY LINE
—R—R—	RETURN LINE
—G—G—	GASOLINE LINE
—VP—VP—	VENT PIPE
x—x—x—x	ORANGE CONSTRUCTION FENCE (SITE FENCE)

DESIGNED: W. NIELSEN DRAWN: W. NIELSEN TECH. REVIEW: STAFF DATE: 5/96	SUB SHEET NO.	TITLE OF SHEET **POLEBRIDGE** **UST REMOVAL AND MODIFICATION** GLACIER NATIONAL PARK	DRAWING NO. 117 / 60,274A PKG. NO. SHEET 2 OF 4

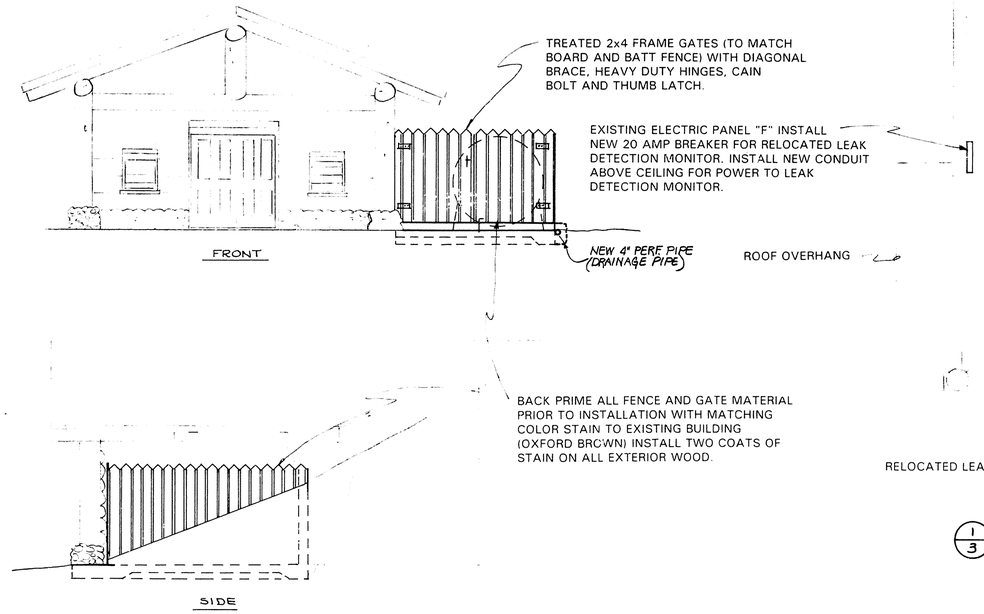

2/3 **NEW CONDITIONS**
NO SCALE

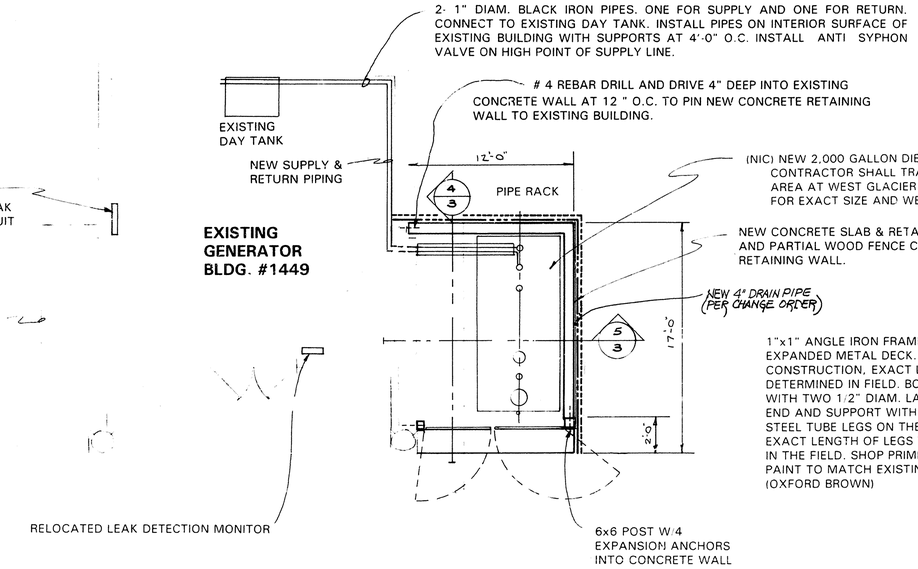

1/3 **PLAN**
NO SCALE

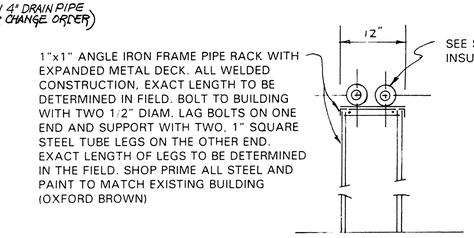

6/3 **PIPE RACK**
NO SCALE

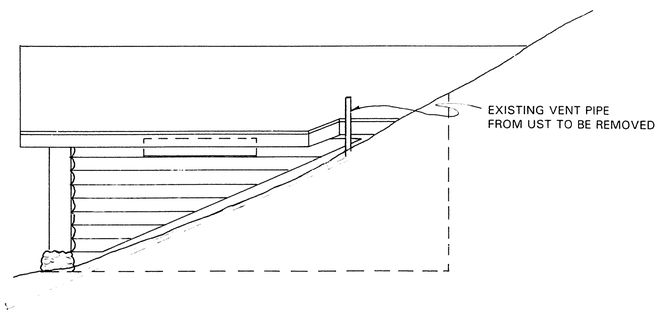

3/3 **EXISTING CONDITIONS**

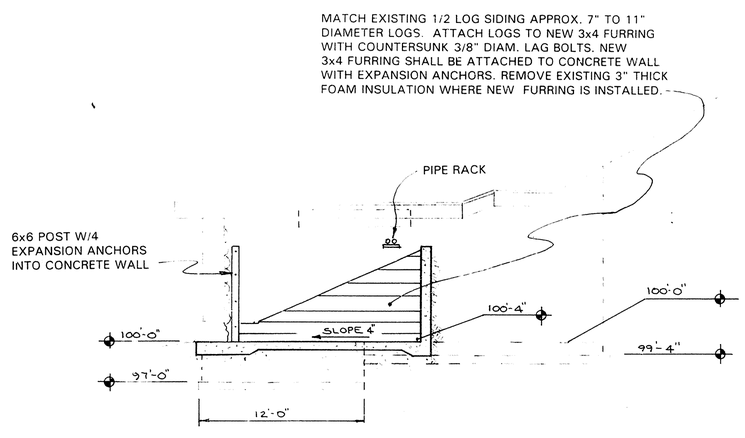

4/3 **SECTION**

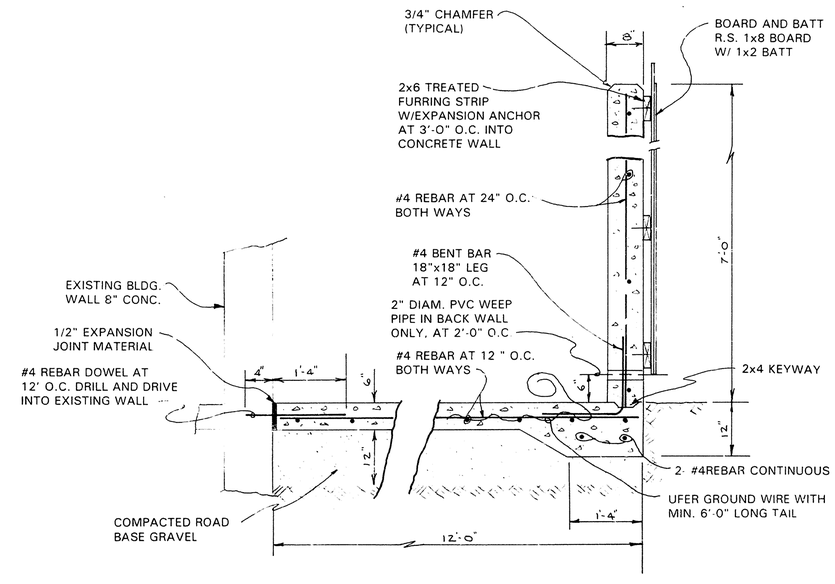

5/3 **SECTION**
SCALE 3/4"=1'-0"

DESIGNED: W.NIELSEN DRAWN: W.NIELSEN TECH. REVIEW: STAFF DATE: 5/96	SUB SHEET NO.	TITLE OF SHEET **POLEBRIDGE** **UST REMOVAL AND MODIFICATIONS** GLACIER NATIONAL PARK	DRAWING NO. 117 / 60,274A PKG. NO. SHEET 3 OF 4

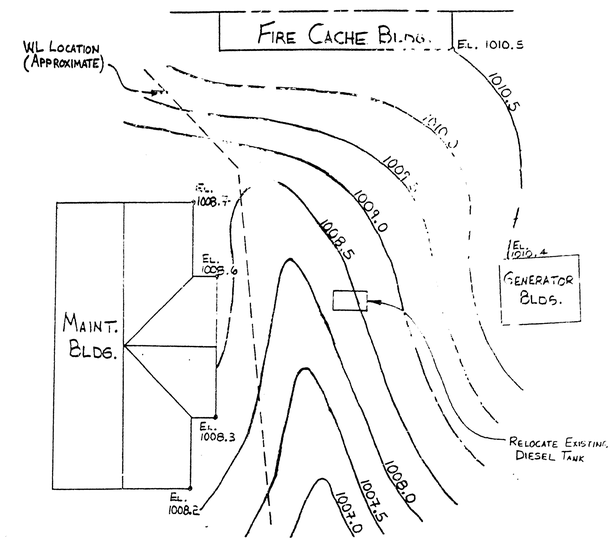

1/4 **NEW GRADING PLAN**
NO SCALE

DESIGNED: W. NIELSEN DRAWN: W. NIELSEN TECH. REVIEW: STAFF DATE: 5/96	SUB SHEET NO.	TITLE OF SHEET **POLEBRIDGE** **UST REMOVAL AND MODIFICATION** GLACIER NATIONAL PARK	DRAWING NO. 117 / 60,274A PKG. NO. SHEET 4 OF 4

2001 NEW WATER TANK

P.1 - WELLS AND ASSOCIATED PIPES SHOWN ON THIS SHEET WERE NEVER INSTALLED; THIS PROJECT ABANDONED THE 1980 WATER TANK AND PLACED THE 8'DIA 31'L FIBERGLASS TANK AND INSTALLED NEW WATER LINES IN THE ROAD.

L E G E N D

- SET 1/2" DIAM. X 18" LONG REBAR WITH 1 1/2" DIAM. ALUM. CAP FOR CONTROL POINT FOR THIS SURVEY
- OBJECT, DESCRIBED IN COORDINATE LIST
- SIGN, DESCRIBED IN COORDINATE LIST
- TELEPHONE PEDESTAL
- TRASH CAN ON CONCRETE PAD
- WATER VALVE COVER
- EDGE OF ROAD OR PARKING LOT
- DRINKING WATER HOLDING TANK COVER
- GATE

GENERAL NOTES

1. Existing utilities, existing improvements, and other buildings within the Polebridge complex are not shown. See drawing number 117/41073B for detailed infrastructure information.
2. Revegetation areas are delineated for each proposed site. Limits shown are approximate.
3. The water system chlorination room is located within the search and rescue (SAR) cache building.

LEGEND

Proposed Well Site

New or replacement water line

Existing water line

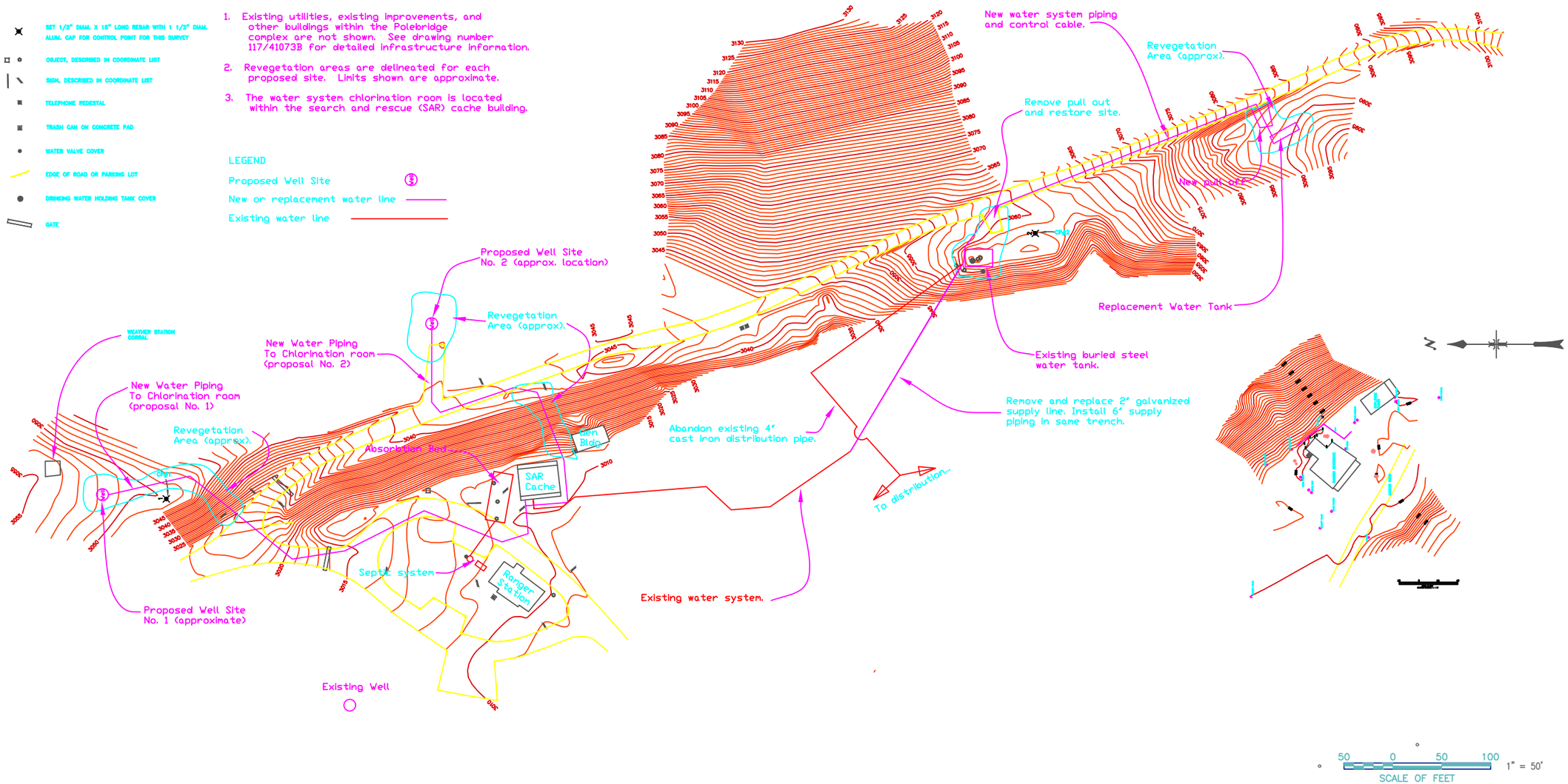

DESIGNED:	SUB SHEET NO.	TITLE OF SHEET	DRAWING NO.
F.S. Survey CADD		Polebridge Survey Data	
TECH. REVIEW:			PKG. NO. / SHEET
DATE:		Glacier National Park Flathead County, MT.	OF

2007 UTILITY PLAN AS-BUILT

P.1-6 DOES NOT SHOW THE SCHOOL TO PARK CABIN; PROPANE LINES ASSUMED ACCURATE

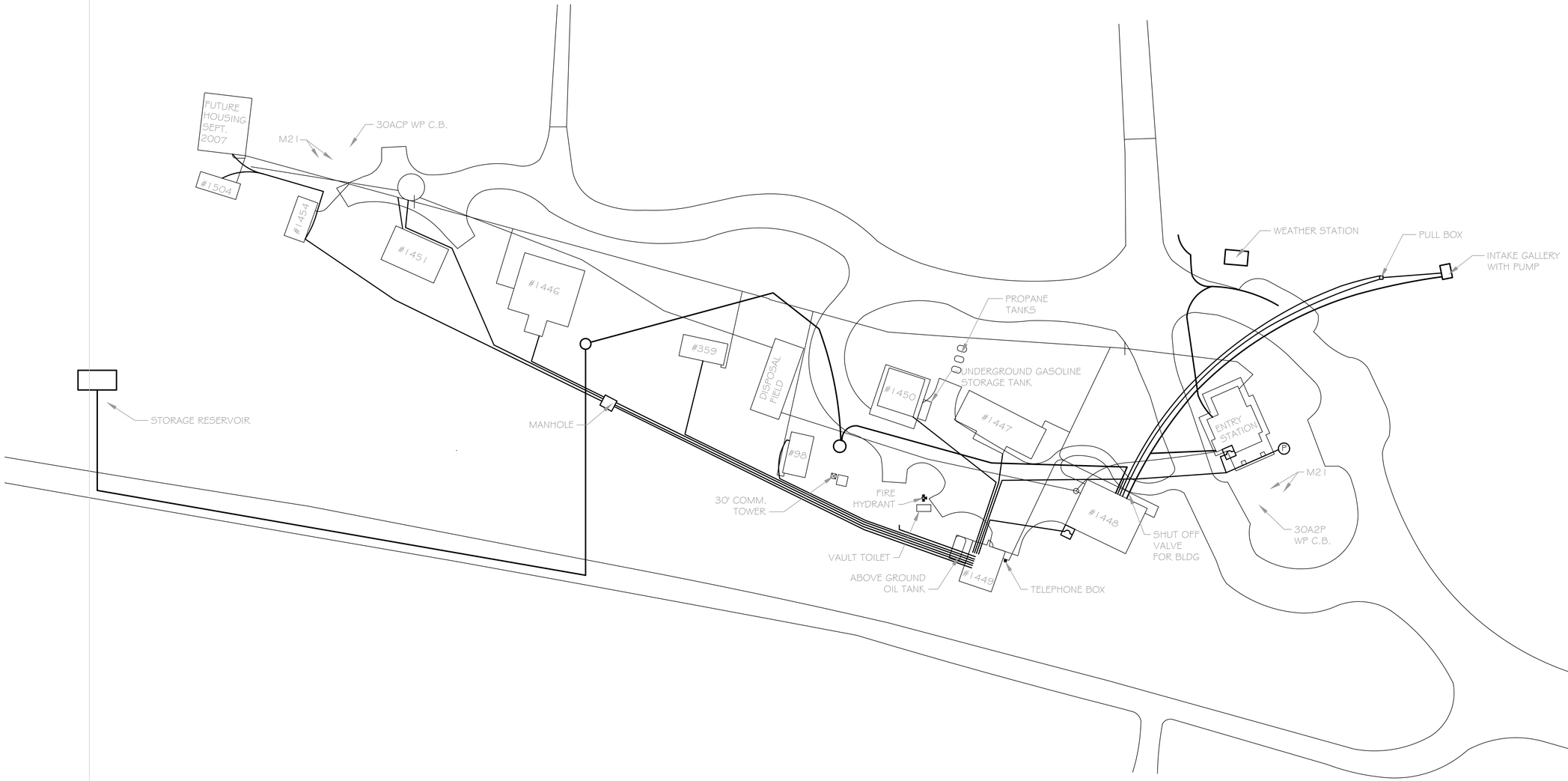

BUILDING NUMBERS:
CABIN -#1504
LAUNDRY - #1454
RESIDENCE - #1451
RANGER STATION - #1446
STORAGE - #359
RESIDENCE - #98
FUEL STORAGE - #1450
MAINTENANCE STORAGE - #1447
GENERATOR - #1449
FIRE CACHE - #1448

DESIGNED:	SUB SHEET NO.	TITLE OF SHEET	DRAWING NO.
CADD MF	S-1	UTILITIES SITE PLAN Polebridge Development	117
TECH. REVIEW:			PMIS/PKG NO.
DATE: 07/2007		GLACIER NATIONAL PARK	SHEET ___ OF ___

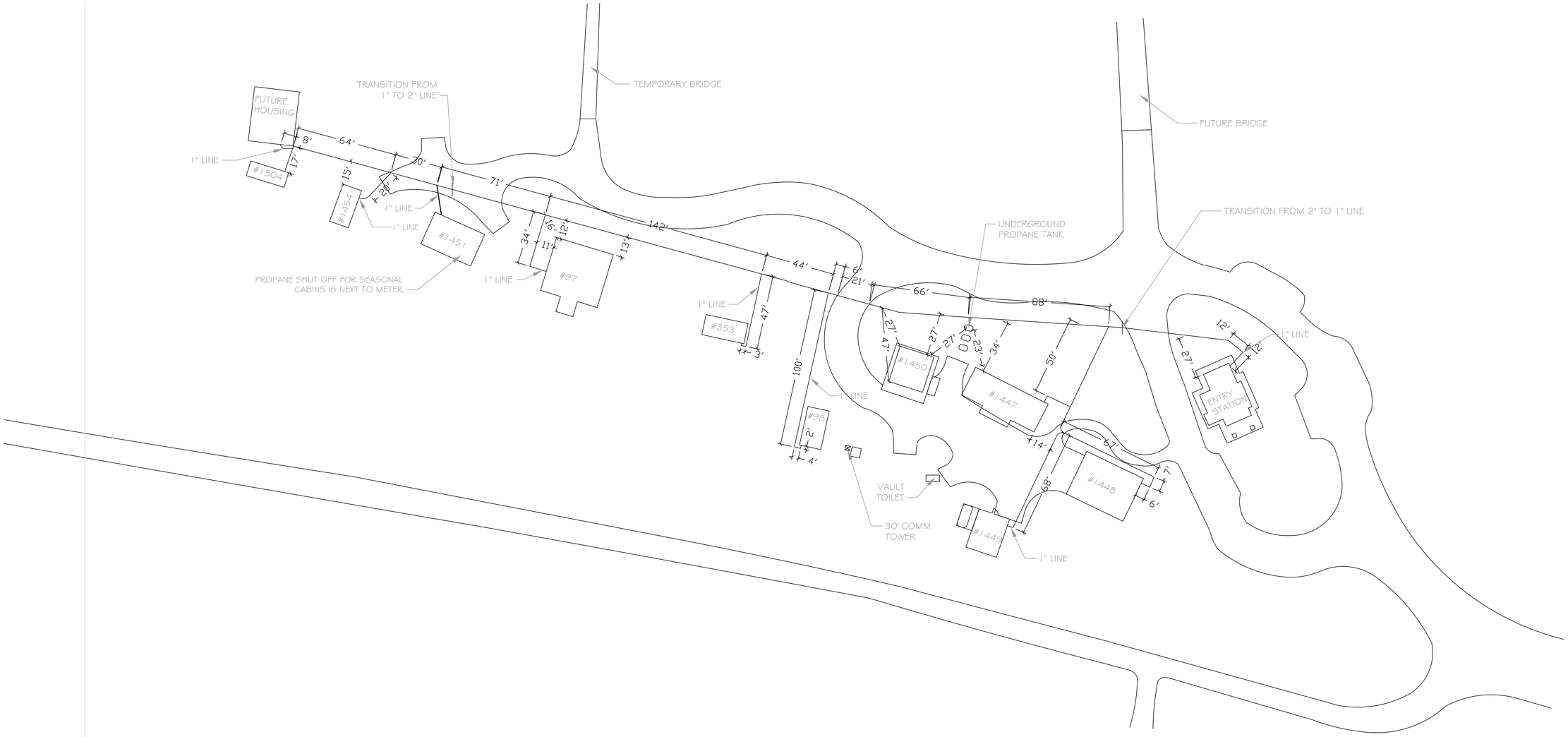

BUILDING NUMBERS:
CABIN -#1504
LAUNDRY - #1454
RESIDENCE - #1451
RANGER STATION - #1446
STORAGE - #359
RESIDENCE - #98
FUEL STORAGE - #1450
MAINTENANCE STORAGE - #1447
GENERATOR - #1449
FIRE CACHE - #1448

DESIGNED:	SUB SHEET NO.	TITLE OF SHEET	DRAWING NO.
CADD MF	S-2	PROPANE LAYOUT Polebridge Utilities	———
TECH. REVIEW:			PMIS/PKG NO.
DATE: 08/2007		GLACIER NATIONAL PARK	SHEET ____ OF ____

BUILDING NUMBERS:
CABIN -#1504
LAUNDRY - #1454
RESIDENCE - #1451
RANGER STATION - #1446
STORAGE - #359
RESIDENCE - #98
FUEL STORAGE - #1450
MAINTENANCE STORAGE - #1447
GENERATOR - #1449
FIRE CACHE - #1448

DESIGNED:	SUB SHEET NO.	TITLE OF SHEET	DRAWING NO.
CADD MF TECH. REVIEW: DATE: 08/2007	S-3	WATER LAYOUT Polebridge Utilities GLACIER NATIONAL PARK	PMIS/PKG NO. SHEET ____ OF ____

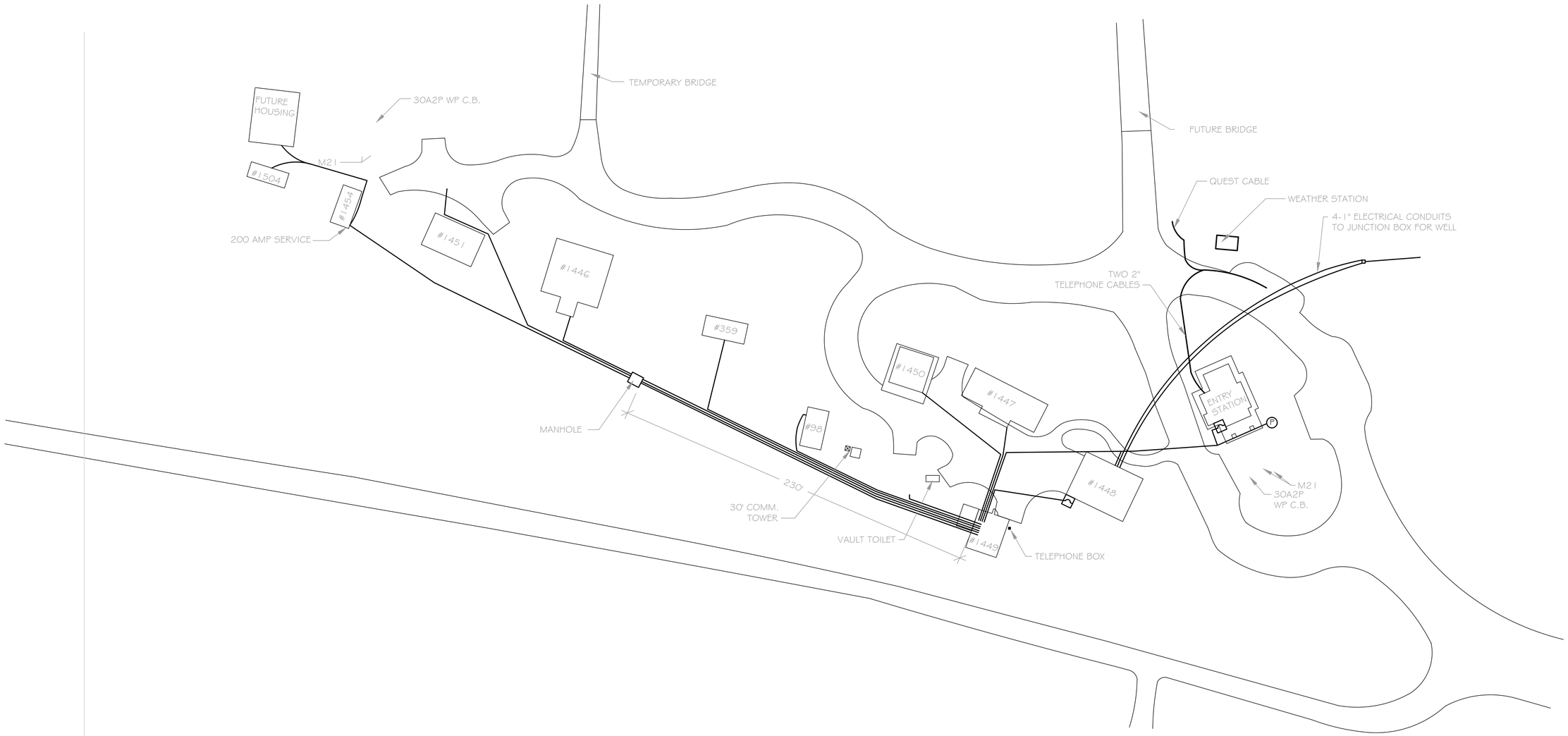

BUILDING NUMBERS:
CABIN -#1504
LAUNDRY - #1454
RESIDENCE - #1451
RANGER STATION - #1446
STORAGE - #359
RESIDENCE - #98
FUEL STORAGE - #1450
MAINTENANCE STORAGE - #1447
GENERATOR - #1449
FIRE CACHE - #1448

DESIGNED:	SUB SHEET NO.	TITLE OF SHEET	DRAWING NO.
CADD mf	S-4	ELECTRIC LAYOUT Polebridge Utilities	PMIS/PKG NO.
TECH. REVIEW:			SHEET ____ OF ____
DATE: 08/2007		GLACIER NATIONAL PARK	

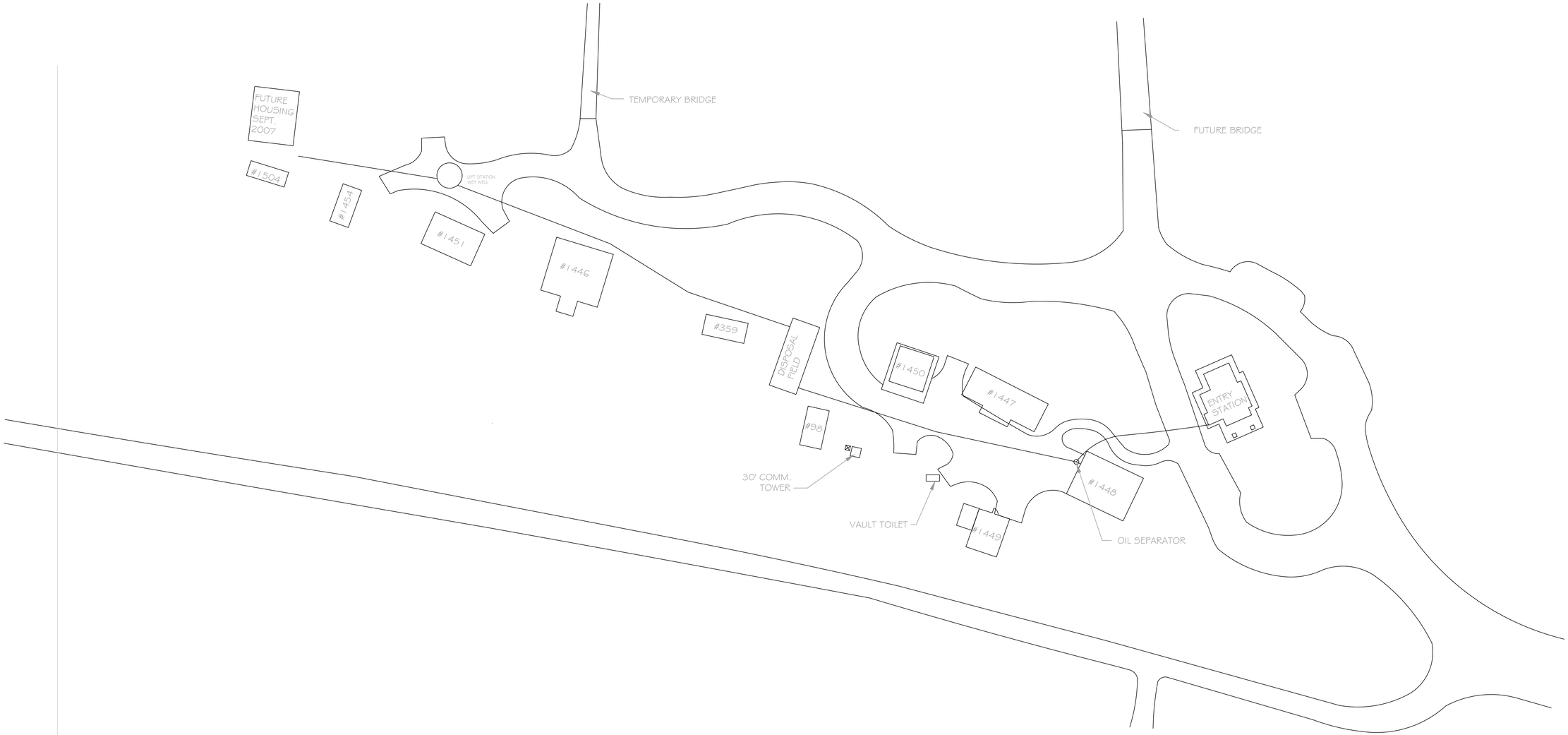

BUILDING NUMBERS:
CABIN -#1504
LAUNDRY - #1454
RESIDENCE - #1451
RANGER STATION - #1446
STORAGE - #359
RESIDENCE - #98
FUEL STORAGE - #1450
MAINTENANCE STORAGE - #1447
GENERATOR - #1449
FIRE CACHE - #1448

DESIGNED:	SUB SHEET NO.	TITLE OF SHEET	DRAWING NO.
CADD MF	S-5	SEWER LAYOUT Polebridge Utilities	PMIS/PKG NO.
TECH. REVIEW:			SHEET ____ OF ____
DATE: 08/2007		GLACIER NATIONAL PARK	

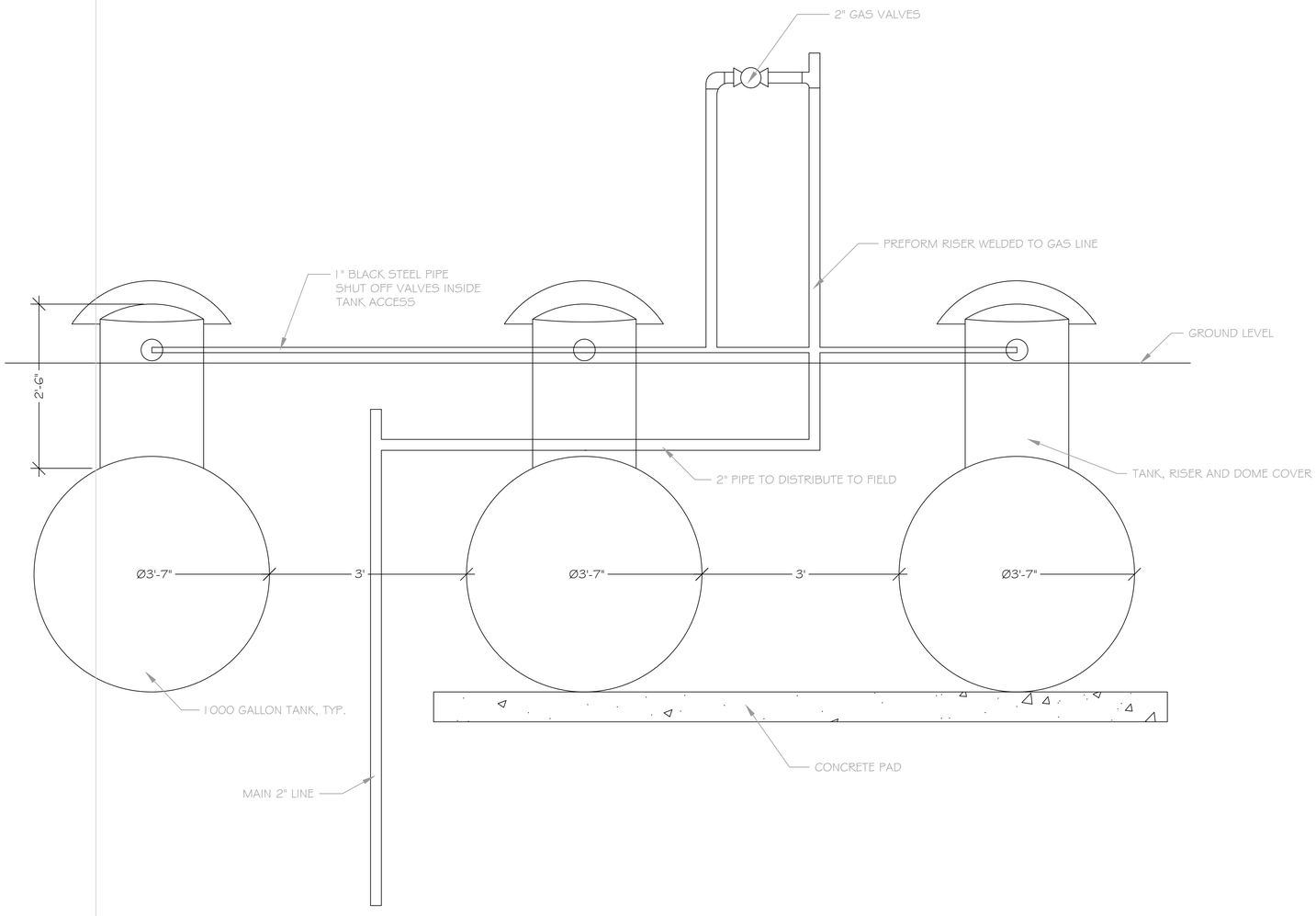

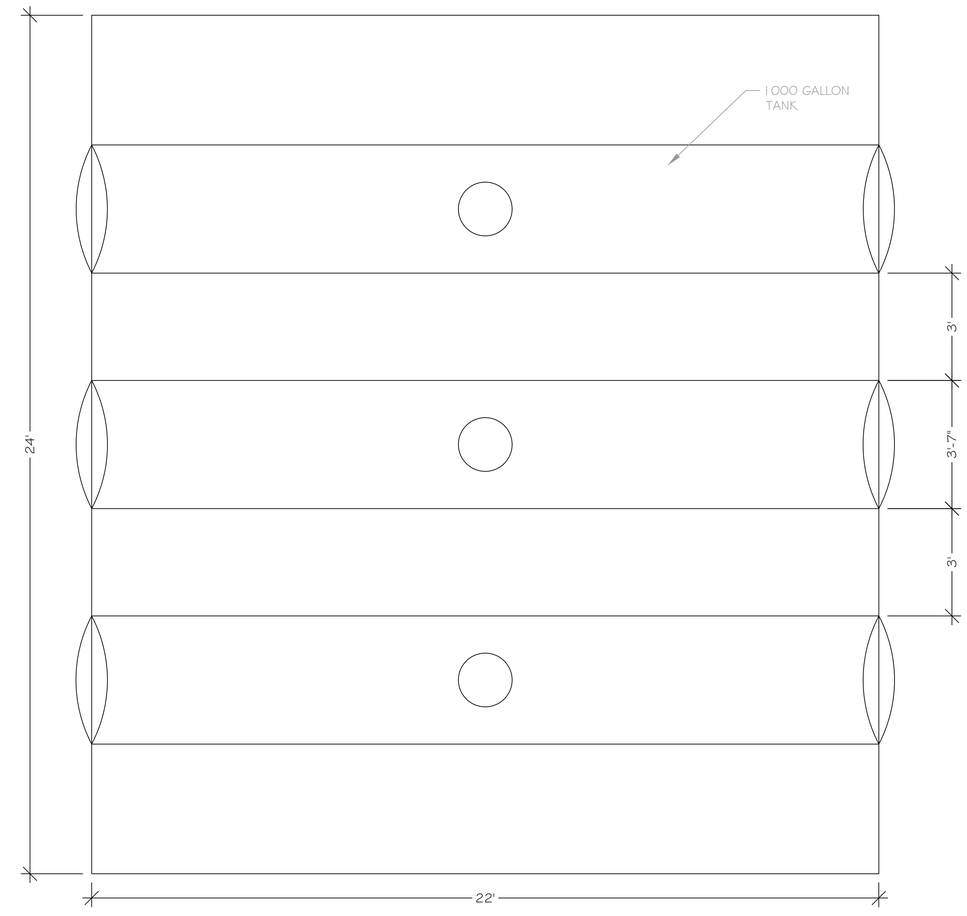

DESIGNED:	SUB SHEET NO.	TITLE OF SHEET	DRAWING NO.
CADD MF TECH. REVIEW:	S-7	PROPANE TANK DETAIL Polebridge Development	117
DATE: 07/2007		GLACIER NATIONAL PARK	PMIS/PKG NO. SHEET ____ OF ____