Docusign Envelope ID: 7E73CA1F-A891-8C95-8356-E0E49D41F272

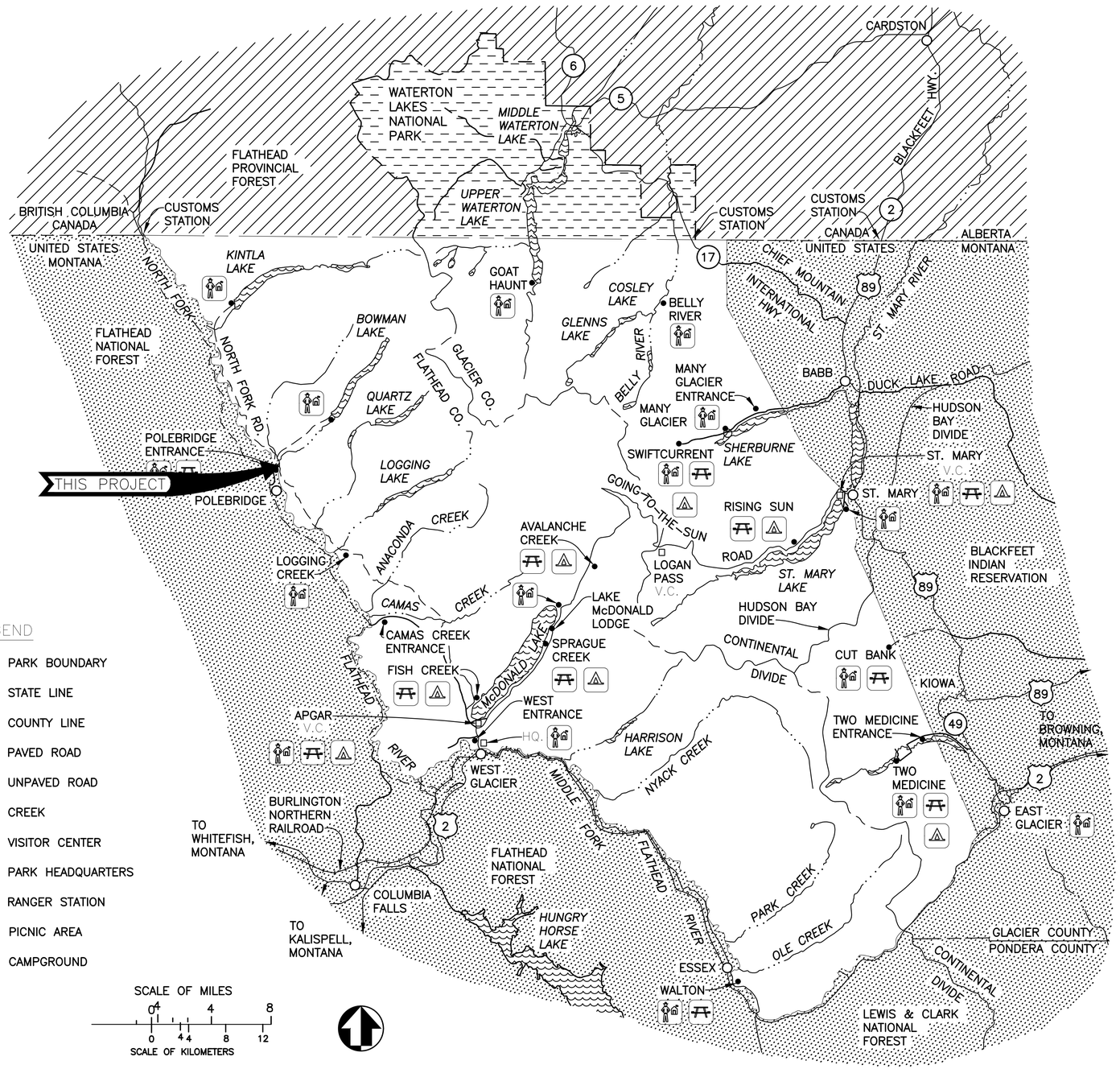

LEGEND

- PARK BOUNDARY
- STATE LINE
- COUNTY LINE
- PAVED ROAD
- UNPAVED ROAD
- CREEK
- V.C. VISITOR CENTER
- HQ. PARK HEADQUARTERS
- RANGER STATION
- PICNIC AREA
- CAMPGROUND

SCALE OF MILES: 0 4 4 8

SCALE OF KILOMETERS: 0 4 4 8 12

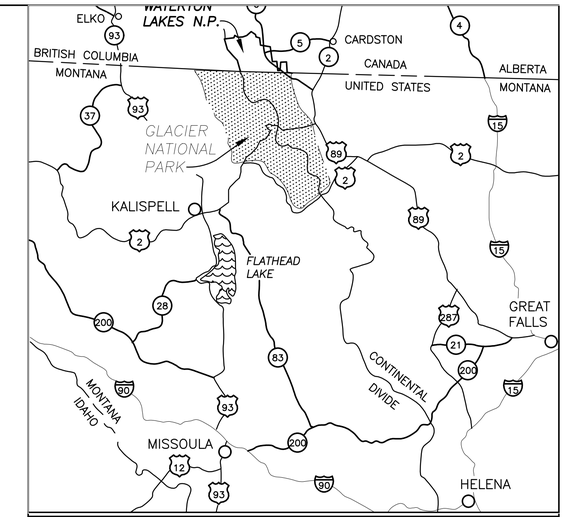

NORTHWEST MONTANA

30 0 30
SCALE OF MILES

MONTANA
Signed by:
ABIGAIL KING
No. 10809PE
4/23/2026
LICENSED
PROFESSIONAL ENGINEER

MONTANA
WILLIAM TROY MOORE
No. 81844PE
04/23/26
LICENSED
PROFESSIONAL ENGINEER

DRAWING INDEX

SHEET	SUB-SHEET	TITLE OF SHEET
GENERAL		
1		COVER SHEET
2	G1	GENERAL NOTES
3	G2	LEGEND, SYMBOLS, & ABBREVIATIONS
4	G3	EXISTING SITE & SURVEY CONTROL
5	G4	DEMOLITION & RECLAMATION PLAN
6	G5	STAGING AREAS
7	G6	EROSION CONTROL PLAN
8	G7	EXISTING CHLORINATION ROOM
CIVIL – WATER SYSTEM		
9	C1	WATER IMPROVEMENTS OVERVIEW
10	C2	FIBER, BURIED ELECTRIC & COMMS PLAN
11	C3	WATER SUPPLY TO CHLORINATION P&P 0+00 – 4+20
12	C4	WATER SUPPLY TO TANK P&P 0+00 – 4+60
13	C5	WATER SUPPLY TO TANK P&P 4+60 – 8+00
14	C6	WATER SUPPLY TO TANK P&P 8+00 – 13+40
15	C7	WATER DISTRIBUTION A P&P 0+00 – 5+20
16	C8	WATER DISTRIBUTION A P&P 5+20 – 9+00
17	C9	WATER DISTRIBUTION B P&P 0+00 – 4+60
18	C10	WATER DISTRIBUTION B & C
19	C11	WATER TANK SITE PLAN
20	C12	DETAILS
21	C13	DETAILS
22	C14	DETAILS
23	C15	DETAILS
24	C16	DETAILS
CIVIL – INFILTRATION GALLERY		
25	C17	INFILTRATION GALLERY SITE PLAN
26	C18	INFILTRATION GALLERY DETAILS
ELECTRICAL		
27	E1	ELECTRICAL LEGEND, ABBREVIATIONS, & SYMBOLS
28	E2	ELECTRICAL SITE PLAN
29	E3	ENLARGED ELECTRICAL SITE PLAN
30	E4	ENLARGED ELECTRICAL SITE PLAN
31	E5	ENLARGED ELECTRICAL SITE PLAN
32	E6	CHLORINATION BUILDING ELECTRICAL POWER PLANS
33	E7	ELECTRICAL DETAILS
34	E8	ELECTRICAL ONE-LINE DIAGRAM AND SCHEDULES
35	E9	WELL PUMP MOTOR CONTROL SCHEMATIC

GLACIER NATIONAL PARK
WORLD HERITAGE SITE

GLAC PMIS: 329234B

NOTE

VEHICLE SIZE RESTRICTIONS EXIST ON GOING-TO-THE-SUN ROAD, AND SOME ROADS ARE CLOSED IN WINTER; PLEASE CHECK WITH PARK OFFICIALS.

BASIC DATA: .

A/E FIRM	Mark	Sheet	REVISION	Date	Initial
PRIME/CIVIL: NELSON ENGINEERING 430 S. CACHE STREET JACKSON, WY 83001 (307) 733-2087					

QUALITY DESIGN CERTIFICATION
- ☐ Prepared in Accordance with Design Development (Title I) _____ Drawing No.
- OR
- ☐ Variance from Design Development (Title I) Approved by Superintendent on _____ Date
- OR
- ☐ Construction Drawing Not Preceded by Design Development (Title I)

Project Manager _____ Date _____

CONSTRUCTION DRAWINGS

UNITED STATES
DEPARTMENT OF THE INTERIOR

NATIONAL PARK SERVICE
INTERMOUNTAIN REGION

TITLE OF PROJECT
REHABILITATE POLEBRIDGE WATER SYSTEM
LOCATION WITHIN PARK
POLEBRIDGE RANGER STATION
NAME OF PARK
GLACIER NATIONAL PARK

REGION	COUNTY	STATE
INTERMOUNTAIN	FLATHEAD	MONTANA

DRAWING NO. 117
197288
PMIS/PKG NO. 329234B
SHEET 1 OF 35

1 SPECIAL PARK REQUIREMENTS

1.0 WILDLIFE

1. ALL CONTRACTORS AND SUBCONTRACTORS SHALL RECEIVE A TRAINING ON WORKING AROUND WILDLIFE, INCLUDING BEARS, PRIOR TO THE START OF WORK. COORDINATE WITH THE COR. ALL CONSTRUCTION PERSONNEL ARE REQUIRED TO FULLY UNDERSTAND AND ABIDE BY ALL PARK REQUIREMENTS, WHICH WILL BE STRICTLY ENFORCED AT ALL TIMES. FAILURE TO COMPLY MAY RESULT IN A CITATION AND FINE. A COPY OF *BEAR, WILDLIFE, AND SANITATION REQUIREMENTS WHILE WORKING IN GLACIER NATIONAL PARK* WILL BE PROVIDED TO THE CONTRACTOR. KEY POINTS OF THIS DOCUMENT INCLUDE:
   - 1.1. FOOD HANDLING AND STORAGE
   - 1.2. MATERIAL HANDLING AND STORAGE
   - 1.3. PETROLEUM PRODUCT, ANTIFREEZE, AND CHEMICAL HANDLING AND STORAGE
   - 1.4. EQUIPMENT USE, MAINTENANCE, AND REFUELING
   - 1.5. SANITATION REQUIREMENTS, INCLUDING SITE CLEANLINESS, TRASH HANDLING AND DISPOSAL, AND PORTABLE TOILET REQUIREMENTS
   - 1.6. WILDLIFE SAFETY AND POTENTIAL WILDLIFE INTERACTIONS

2.0 ARCHEOLOGICAL MONITORING

1. THE NPS ARCHEOLOGY & CULTURAL RESOURCES TEAM WILL MONITOR ALL GROUND DISTURBING SITE WORK AND EXAMINE EXCAVATED MATERIALS IN ARCHEOLOGICALLY SENSITIVE AREAS. THE CONTRACTOR SHALL PROVIDE A SCHEDULE OF ALL GROUND DISTURBING ACTIVITIES AT LEAST TWO WEEKS PRIOR TO ANY GROUND DISTURBANCE.
2. WORK SHALL BE STOPPED IMMEDIATELY AND THE CONTRACTOR SHALL NOTIFY THE CO AND COR IF SUSPECTED ARCHEOLOGICAL RESOURCES ARE DISCOVERED DURING CONSTRUCTION. THE ARCHEOLOGY AND CULTURAL RESOURCES TEAM WILL DETERMINE IF THE SUSPECTED ARCHEOLOGICAL RESOURCES ARE SIGNIFICANT, DOCUMENT THE LOCATION OF THE FINDINGS, AND IF NECESSARY, DEVELOP AN APPROPRIATE MITIGATION PLAN. THE CONTRACTOR MAY BE REQUIRED TO STOP WORK AT THE LOCATION OF THE FINDINGS AND MOVE ELSEWHERE UNTIL GIVEN CLEARANCE FROM NPS.

3.0 INVASIVE SPECIES

1. TO PREVENT THE INTRODUCTION OF NOXIOUS WEEDS TO THE PARK, THE CONTRACTOR SHALL THOROUGHLY PRESSURE WASH ALL EARTH–MOVING AND OFF–ROAD VEHICLES AND EQUIPMENT WITH MINIMUM 122°F WATER AT 2,900 PSI PRIOR TO ENTERING THE PARK. ALL EQUIPMENT MUST BE FREE OF SOILS, PLANT MATTER, AND OTHER DEBRIS AS DETERMINED BY THE COR. COORDINATE INSPECTIONS WITH NPS AT LEAST TWO BUSINESS DAYS PRIOR TO BRINGING EQUIPMENT TO THE PARK. FAILED INSPECTIONS MUST BE CORRECTED AT THE CONTRACTOR'S EXPENSE. VEHICLES AND EQUIPMENT THAT ARE RE–ENTERING THE PARK DO NOT HAVE TO BE CLEANED AGAIN, PROVIDED THAT THEY HAVE NOT OPERATED ON A DIFFERENT JOBSITE. COORDINATE WITH NPS.
2. TO PREVENT INTRODUCTION OF AQUATIC INVASIVE SPECIES INTO THE PARK, ALL WATER PUMPS, HOSES, AND TANKS FOR USE IN OR NEAR WATER BODIES MUST BE CHLORINATED WITH A 200 PPM CHLORINE SOLUTION AND INSPECTED BY NPS. USE A POWDER CALCIUM HYPOCHLORITE OR LIQUID BLEACH SODIUM HYPOCHLORITE. ALLOW THE SOLUTION TO STAND FOR AT LEAST 12 HRS AND TEST TO VERIFY THAT A MINIMUM 150 PPM IS PRESENT. CHLORINATED WATER SHALL BE DISPOSED OF OUTSIDE OF THE PARK. VEHICLES AND EQUIPMENT THAT ARE RE–ENTERING THE PARK DO NOT HAVE TO BE CHLORINATED AGAIN, PROVIDED THAT IT HAS NOT OPERATED ON A DIFFERENT JOBSITE. COORDINATE WITH NPS.
3. ALL IMPORTED ROCKS, GRAVEL, FILL, OR TOPSOIL SHALL BE SOURCED FROM A NPS APPROVED WEED–FREE SOURCE. THIS LIST IS MAINTAINED BY NPS. COORDINATE WITH NPS.

2 CODES AND STANDARDS

ALL WORK SHALL BE PERFORMED IN ACCORDANCE WITH THE FOLLOWING CODES. SHOULD CODES CONFLICT, THE MORE STRINGENT REQUIREMENT SHALL APPLY.

1. HEALTH AND SAFETY CODES
   - 1.1. 29 CFR 1910 OCCUPATIONAL SAFETY AND HEALTH STANDARDS
   - 1.2. 29 CFR 1926 SAFETY AND HEALTH REGULATIONS FOR CONSTRUCTION
   - 1.3. NFPA 241 STANDARDS FOR SAFEGUARDING CONSTRUCTION, ALTERATION, AND DEMOLITION OPERATIONS
2. MONTANA STATE CODES
   - 2.1. MONTANA DEQ CIRCULARS, CURRENT EDITIONS
   - 2.2. MONTANA DEPT. OF TRANSPORTATION STANDARD SPECIFICATIONS FOR ROAD AND BRIDGE CONSTRUCTION 2020, V5.0
3. BUILDING CODES
   - 3.1. 2023 NFPA 70 NATIONAL ELECTRIC CODE
   - 3.2. 2024 ICC I–CODES
4. ACCESSIBILITY CODES
   - 4.1. ABAAS ARCHITECTURAL BARRIERS ACT ACCESSIBILITY STANDARD
5. TRAFFIC CONTROL
   - 5.1. MUTCD US DEPT. OF TRANSPORTATION MANUAL ON UNIFORM TRAFFIC CONTROL DEVICES
6. THE FOLLOWING STANDARDS SHALL APPLY FOR ALL MATERIALS, INSTALLATIONS, AND TESTS:
   - 6.1. ASTM AMERICAN SOCIETY FOR TESTING AND MATERIALS INTERNATIONAL
   - 6.2. AWWA AMERICAN WATER WORKS ASSOCIATION
   - 6.3. AASHTO AMERICAN ASSOCIATION OF STATE HIGHWAY AND TRANSPORTATION OFFICIALS
   - 6.4. ANSI AMERICAN NATIONAL STANDARDS INSTITUTE
   - 6.5. AISC AMERICAN INSTITUTE OF STEEL CONSTRUCTION
   - 6.6. AISI AMERICAN IRON AND STEEL INSTITUTE
   - 6.7. AWS AMERICAN WELDING SOCIETY
   - 6.8. ACI AMERICAN CONCRETE INSTITUTE
   - 6.9. ASHREA AMERICAN SOCIETY OF HEATING, REFRIGERATION, AND AIR CONDITIONING ENGINEERS
   - 6.10.ISSA INTERNATIONAL SLURRY SURFACING ASSOCIATION
   - 6.11.UL UNDERWRITERS LABORATORIES

3 MATERIAL AND EQUIPMENT STAGING AREAS

1. STAGING AREAS SHALL NOT OBSTRUCT EMERGENCY TRAFFIC, VISITOR TRAFFIC, OR NPS USE AND OCCUPATION OF THE SITE. COORDINATE WITH THE COR.
2. OVERNIGHT MATERIAL AND EQUIPMENT STAGING AREAS SHOULD BE LIMITED TO HARDSCAPED AREAS SUCH AS GRAVEL OR PAVEMENT. AVOID STAGING MATERIALS ON NATURAL GROUND SURFACES.

4 CLEARING, GRUBBING, TOPSOIL STRIPPING, & TREE PROTECTION

1. ALL UTILITIES NEAR THE PROJECT AREA SHALL BE MARKED PRIOR TO ANY CLEARING AND GRUBBING ACTIVITIES.
2. ONLY AREAS WITHIN THE LIMITS OF DISTURBANCE AS DEFINED ON THE PLANS SHEETS SHALL BE DISTURBED BY CONSTRUCTION ACTIVITIES. THE CONTRACTOR SHALL COORDINATE WITH THE PARK IF IT IS ABSOLUTELY NECESSARY TO DISTURB AREAS OUTSIDE OF THE DEFINED LIMITS OF DISTURBANCE.
3. THE CONTRACTOR SHALL CLEARLY DELINEATE ALL VEGETATION AND TREES TO BE CLEARED PRIOR TO STARTING WORK. ALL VEGETATION AND TREES OUTSIDE OF THE AREAS TO BE CLEARED SHALL BE PROTECTED BY THE CONTRACTOR.
4. SHOULD EXCAVATIONS DAMAGE OR BREAK ROOTS OF TREES TO REMAIN LARGER THAN 1" DIAMETER, THE CONTRACTOR SHALL MAKE A CLEAN, PERPENDICULAR CUT TO THE UNDAMAGED PORTION OF THE ROOT. NOTIFY THE PARK IF EXCAVATION DAMAGES A ROOT THAT IS GREATER THAN 2" IN DIAMETER OF A TREE TO REMAIN.
5. REMOVED TREES AND VEGETATION SHOULD BE USED TO COVER DISTURBED SOILS WHEN TRENCHING IS COMPLETE TO PROVIDE A NATURAL GROUND COVER TO LIMIT EROSION. EXCESS MATERIAL SHALL BE DISPOSED OF OUTSIDE OF THE PARK BOUNDARY BY THE CONTRACTOR.
6. THE CONTRACTOR SHALL STRIP AND STOCKPILE ALL DUFF AND TOPSOIL PRIOR TO ANY EXCAVATION, EARTH MOVING, OR HAULING OPERATIONS. ALL STOCKPILES SHALL BE PROPERLY PROTECTED FROM EROSION AND SEDIMENTATION.
7. THE CONTRACTOR SHALL SCARIFY THE TOP 4" OF ALL PLACED TOPSOIL IN PREPARATION OF SEEDING AND RESTORATION. TOPSOIL SHALL BE SMOOTHLY GRADED AND AT THE FINISH GRADE ELEVATION. TOPSOIL SHALL BE FREE OF CLODS, STONES, AND OTHER DEBRIS LARGER THAN 2".
8. SEEDING AND VEGETATION RESTORATION WORK WILL BE COMPLETED BY NPS.
9. ALL IMPORTED ROCKS, GRAVEL, FILL, OR TOPSOIL SHALL BE SOURCED FROM A NPS APPROVED WEED–FREE SOURCE. THIS LIST IS MAINTAINED BY NPS. COORDINATE WITH THE COR.
10. UPON PROJECT COMPLETION, THE CONTRACTOR SHALL REMOVE ALL EXCESS SPOILS, ROCKS, BOULDERS, BRUSH, TREES, AND OTHER CONSTRUCTION DEBRIS FROM THE SITE AND DISPOSE OF THESE MATERIALS PROPERLY.

P&ID SYMBOLS

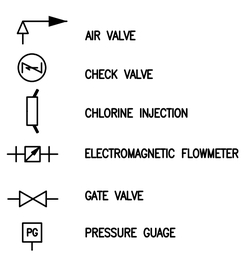

ACRONYM	DEFINITION
ARV	AIR RELEASE VALVE
CI	CHLORINE INJECTION
CV	CHECK VALVE
FE	FLOW SENSOR
FIT	FLOW INDICATOR & TRANSMITTER
FM	FLOW METER
FMAL	FLOOR MOISTURE ALARM
FQIR	FLOW QUANTITY INDICATE & RECORD
GPD	GALLONS PER DAY
HOA	HAND/OFF/AUTO
HS	HAND SWITCH
HV	HAND VALVE
LAH	HIGH LEVEL ALARM
LAL	LOW LEVEL ALARM
LIRC	LEVEL INDICATE & RECORD
LT	LEVEL TRANSMITTER
PE	PRESSURE SENSOR
PG	PRESSURE GAUGE
PID	PIPING & INSTRUMENTATION DIAGRAM
PLC	PROGRAM LOGIC CONTROL (CENTER)
PRIC	PRESSURE INDICATE & RECORD
YC	RUN CONTROL

PROCESS & INSTRUMENTATION DIAGRAM (P&ID)

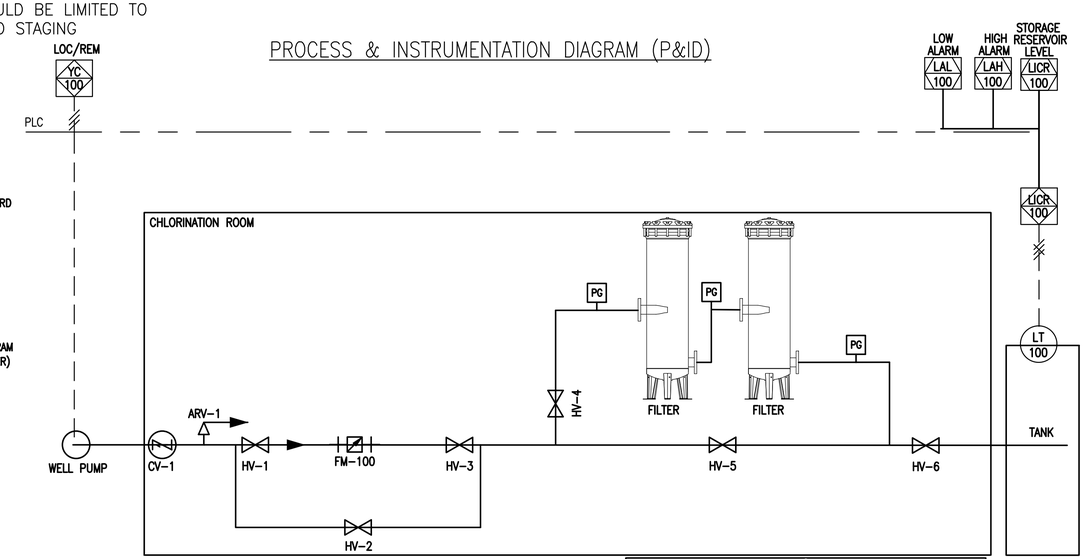

BUILDING INFORMATION

BUILDING #	BUILDING NAME	WATER SERVICE	BUILDING USAGE
97	RANGER RESIDENCE	YEAR ROUND WATER	YEAR ROUND USE
98	CABIN	SEASONAL WATER	SEASONAL
353	RANGER OFFICE	NO	YEAR ROUND USE
1447	EQUIPMENT CACHE	NO	YEAR ROUND USE
1448	FIRE CACHE, STORAGE, CHLORINATOR	NO (SPIGOT)	YEAR ROUND USE
1449	GENERATOR BUILDING	NO	YEAR ROUND USE
1450	HAZARDOUS MATERIAL STORAGE	NO	YEAR ROUND USE
1451	STRISSEL CABIN	YEAR ROUND WATER	YEAR ROUND USE
1454	LAUNDRY AND SHOWER	SEASONAL WATER	SEASONAL
1455	POLEBRIDGE RANGER STATION	SEASONAL WATER	YEAR ROUND USE
1576	RADIO SHED	NO	YEAR ROUND USE
1594	DORM	SEASONAL WATER	SEASONAL
1842	VAULT TOILET	NO	YEAR ROUND USE
1865	SCHOOL TO PARK CABIN	SEASONAL WATER	SEASONAL

DESIGN PARAMETERS

AVERAGE INSTANTANEOUS FLOW	1.7 GALLONS PER MINUTE
AVERAGE DAY FLOW	2,496 GALLONS PER DAY
PEAKING FACTOR	10
PEAK HOUR FLOW	17.3 GALLONS PER MINUTE
DESIGN PUMP FLOW RATE	18.0 GALLONS PER MINUTE
DESIGN PUMP HEAD	217 FEET
DOMESTIC STORAGE (MIN.)	2,496 GALLONS
FIRE STORAGE (MIN.)	10,587 GALLONS
REQUIRED STORAGE (MIN.)	13,083 GALLONS
DESIGN STORAGE	14,000 GALLONS
HYDRANT FIRE FLOW (MIN.)	250 GALLONS PER MINUTE

Mark	REVISION	Date	Initial

DESIGNED: NELSON ENGINEERING
CADD NE
TECH. REVIEW:
DATE: 04/08/2026

SUB SHEET NO. G1

CONSTRUCTION DOCUMENTS

TITLE OF SHEET
DRAWING INDEX & GENERAL NOTES

GLACIER NATIONAL PARK
REHABILITATE POLEBRIDGE WATER SYSTEM

DRAWING NO. 117
197288
PMIS/PKG NO. 329234B
SHEET 2 OF 35

SURVEY LINETYPES

- EDGE OF SITE GEOMETRY
- EDGE OF WATERWAY
- 3600 — MAJOR CONTOUR
- 3599 — MINOR CONTOUR
- C — COMMUNICATIONS LINE
- E — ELECTRIC LINE
- F — FIBER OPTIC LINE
- P — PROPANE LINE
- S — SEWER LINE
- FM — SEWER FORCEMAIN LINE
- STORM SEWER LINE
- T — TELEPHONE LINE
- W — WATER LINE
- X — FENCE
- GUARDRAIL

BUILDING SYMBOLS

- BUILDING & ROOF OVERHANG
- WINDOW WELL

SITE FEATURES & FURNITURE SYMBOLS

- FEE BOX
- FLAGPOLE
- FIRE PIT
- PICNIC TABLE
- TRASH OR RECYCLING
- POST OR BOLLARD (ROUND OR SQUARE)
- ROAD SIGN
- INTERPRETIVE SIGN
- ROAD GATE & GUY WIRE
- BOULDER

SITE UTILITY SYMBOLS

- EB — ELECTRIC BREAKER OR SERVICE DISCONNECT BOX
- E — ELECTRIC METER
- E — ELECTRIC PEDESTAL
- HANDHOLE (COMPOSITE MATERIAL)
- SATELLITE DISH
- M — MONITORING WELL
- P — PROPANE MANHOLE
- P — PROPANE METER
- PROPANE VALVE
- PROPANE TANK (UNDERGROUND)
- ST — SEPTIC TANK COVER AND APPROXIMATE TANK LIMITS
- S — SEWER MANHOLE
- LS — SEWER LIFT STATION
- SEWER CLEANOUT
- T — TELEPHONE PEDESTAL
- WATER CURB STOP
- FIRE HYDRANT
- W — WATER VAULT STRUCTURE
- WATER PUMP OUT
- WATER VALVE
- WATER SPIGOT

SURVEY CONTROL SYMBOLS

- CONTROL POINT

SITE VEGETATION SYMBOLS

- SHRUB OR BUSH
- TREE STUMP
- DECIDUOUS TREE
- PINE TREE

SITE GROUND COVER HATCHES

- ASPHALT AREA
- CONCRETE AREA
- GRAVEL AREA
- LANDSCAPING STONE AREA
- VEGETATION AREA
- WATER AREA (APPROXIMATE HIGH-WATER LINE)

ABBREVIATIONS

GAL.	GALLON
G.S.	GALVANIZED STEEL
C.I.	CAST IRON
INV.	PIPE INVERT
PVC	POLYVINYL CHLORIDE
HDPE	HIGH DENSITY POLYETHYLENE
LF	LINEAR FEET
NPS	NATIONAL PARK SERVICE

Mark	REVISION	Date	Initial

DESIGNED: NELSON ENGINEERING
CADD NE
TECH. REVIEW:
DATE: 04/08/2026

SUB SHEET NO. G2

CONSTRUCTION DOCUMENTS

TITLE OF SHEET
LEGEND, SYMBOLS, & ABBREVIATIONS

GLACIER NATIONAL PARK
REHABILITATE POLEBRIDGE WATER SYSTEM

DRAWING NO. 117 / 197288
PMIS/PKG NO. 329234B
SHEET 3 OF 35

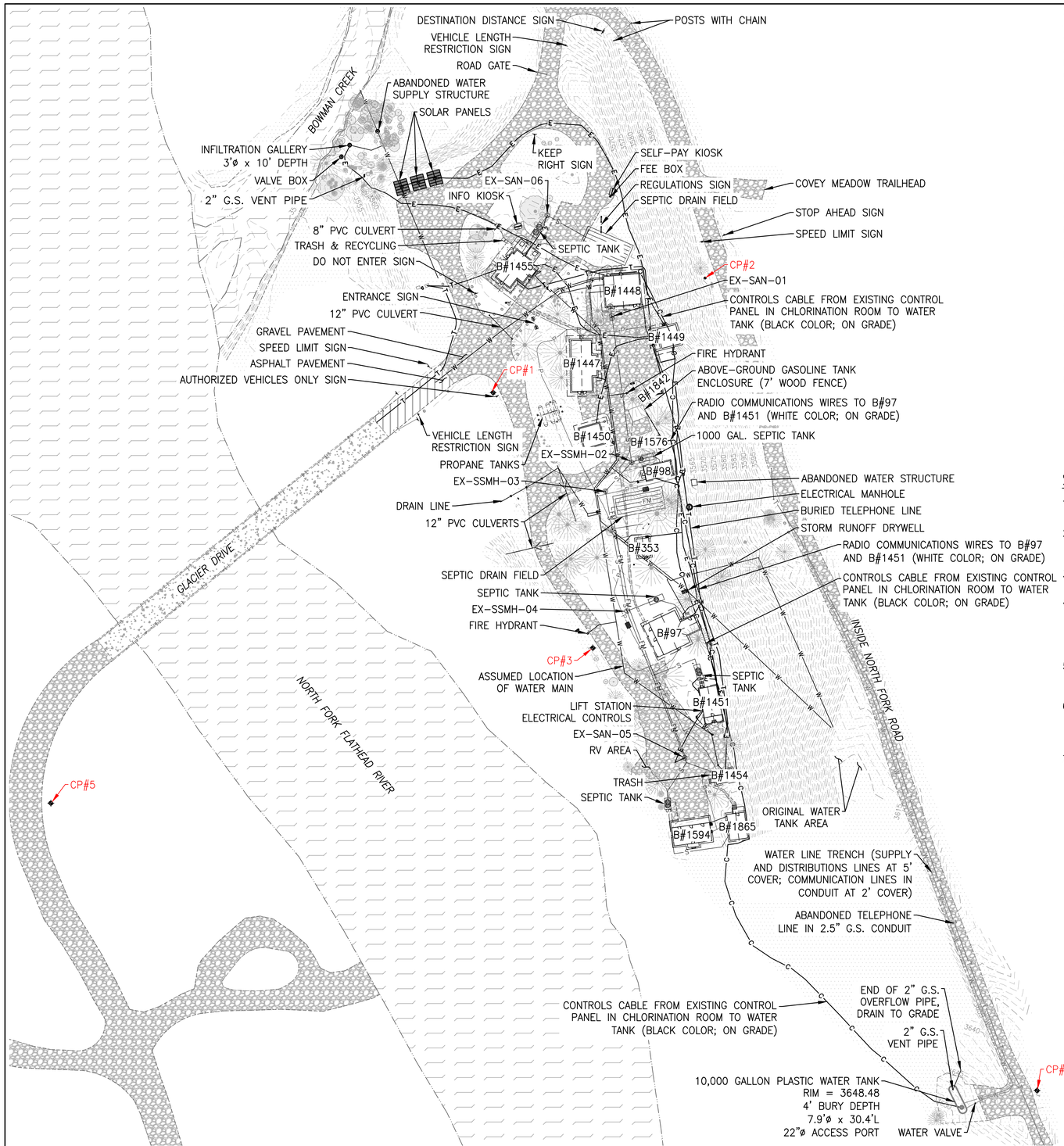

SURVEY CONTROL POINTS

CONTROL POINT 1 (CP#1)
(N, E, Z) = (1687908.768, 816726.576, 3561.14)
REBAR WITH ORANGE CAP SET IN GRASSY AREA OFF THE SOUTHWEST CORNER OF THE INTERSECTION OF THE RANGER STATION LOOP ROAD AND THE HOUSING AREA ROAD, APPROXIMATELY 5.4' FROM THE "AUTHORIZED VEHICLES ONLY" SIGN.

CONTROL POINT 2 (CP#2)
(N, E, Z) = (1688024.765, 816941.301, 3595.52)
REBAR SET IN VEGETATED AREA, APPROXIMATELY 11.2' FROM THE WEST EDGE OF THE INSIDE NORTH FORK ROAD AND 11.3' SOUTH OF A 14"ø LARCH TREE.

CONTROL POINT 3 (CP#3)
(N, E, Z) = (1687560.127, 816827.540, 3558.58)
REBAR SET IN VEGETATED AREA, APPROXIMATELY 15.5' SOUTHEAST OF THE EXISTING FIRE HYDRANT AND 11.7' NORTHEAST OF AN EXISTING 4"ø DECIDUOUS TREE.

CONTROL POINT 4 (CP#4)
(N, E, Z) = (1687201.786, 817277.527, 3639.61)
REBAR SET IN VEGETATED AREA, APPROXIMATELY 5.4' FROM THE EAST EDGE OF THE INSIDE NORTH FORK ROAD ACROSS FROM THE EXISTING WATER TANK LOCATION AND JUST NORTH OF A BIG BOULDER.

CONTROL POINT 5 (CP#5)
(N, E, Z) = (1687492.878, 816287.559, 3560.60)
REBAR WITH ALUMINUM CAP SET BY THE FEDERAL HIGHWAY ADMINISTRATION, APPROXIMATELY 9.5' FROM THE EDGE OF THE ROADWAY AND 180' ALONG THE CENTERLINE FROM THE END OF THE BRIDGE.

VICINITY MAP

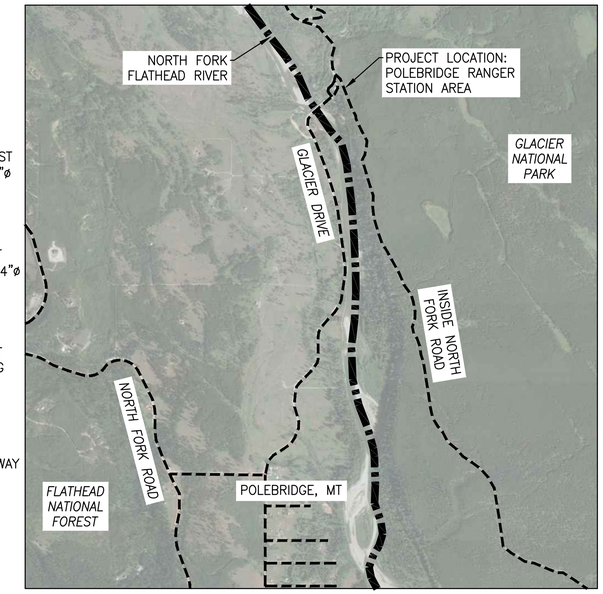

SURVEY NOTES

1. SURVEY DATA WAS COLLECTED BY NPS IN APRIL TO MAY 2025 USING A TRIMBLE R-12i GNSS UNIT OWNED BY NPS AND A TRIMBLE R-12 BASE STATION.
2. THE COORDINATE SYSTEM IS NAD83 MONTANA STATE PLANES (2500) AND NAD83. SURVEYING TOLERANCES ARE WITHIN 0.15' HORIZONTAL AND 0.25' VERTICAL ACCURACY. ALL UNITS ARE LISTED IN INTERNATIONAL FEET.
3. SITE CONDITIONS MAY HAVE CHANGED SINCE THE SURVEY WAS COMPLETED. THE CONTRACTOR SHALL VISIT THE SITE AND UNDERSTAND ALL SITE CONDITIONS PRIOR TO THE START OF WORK.
4. UTILITY DATA MAY BE INCOMPLETE. THE LOCATION OF ALL KNOWN AND UNKNOWN UTILITIES IS NOT GUARANTEED. THE CONTRACTOR SHALL FIELD VERIFY THE PIPE OR CONDUIT SIZE AND HORIZONTAL AND VERTICAL LOCATIONS OF ALL UTILITIES PRIOR TO THE START OF CONSTRUCTION. UTILITIES OWNED BY NPS OR PUBLIC UTILITY COMPANIES MAY BE PRESENT AT THE SITE. NOTIFY NPS OF ANY DISCREPANCIES.
5. THE CONTRACTOR SHALL CALL MONTANA 811 AT LEAST THREE BUSINESS DAYS PRIOR TO ANY GROUND DISTURBANCE. THE CONTRACTOR SHALL ENSURE THAT ALL UTILITIES ARE CLEARLY MARKED FOR THE DURATION OF CONSTRUCTION.
6. THE CONTRACTOR SHALL MAINTAIN SURVEY CONTROL POINTS THROUGHOUT CONSTRUCTION. IF CONTROL POINTS ARE DISTURBED BY CONSTRUCTION, NEW CONTROL POINTS SHALL BE SET AND TIED INTO THE PROJECT'S EXISTING DATUM BY THE CONTRACTOR. FINAL CONTROL POINTS SHALL BE NOTED ON AS-BUILT DRAWINGS.
7. ONLY TREES IN THE POTENTIAL AREA OF EFFECT WERE SURVEYED.

Mark	REVISION	Date	Initial

DESIGNED: NELSON ENGINEERING
CADD: NE
TECH. REVIEW:
DATE: 04/08/2026

SUB SHEET NO. G3

CONSTRUCTION DOCUMENTS

TITLE OF SHEET
EXISTING SITE & SURVEY CONTROL

GLACIER NATIONAL PARK
REHABILITATE POLEBRIDGE WATER SYSTEM

DRAWING NO. 117 / 197288
PMIS/PKG NO. 329234B
SHEET 4 OF 35

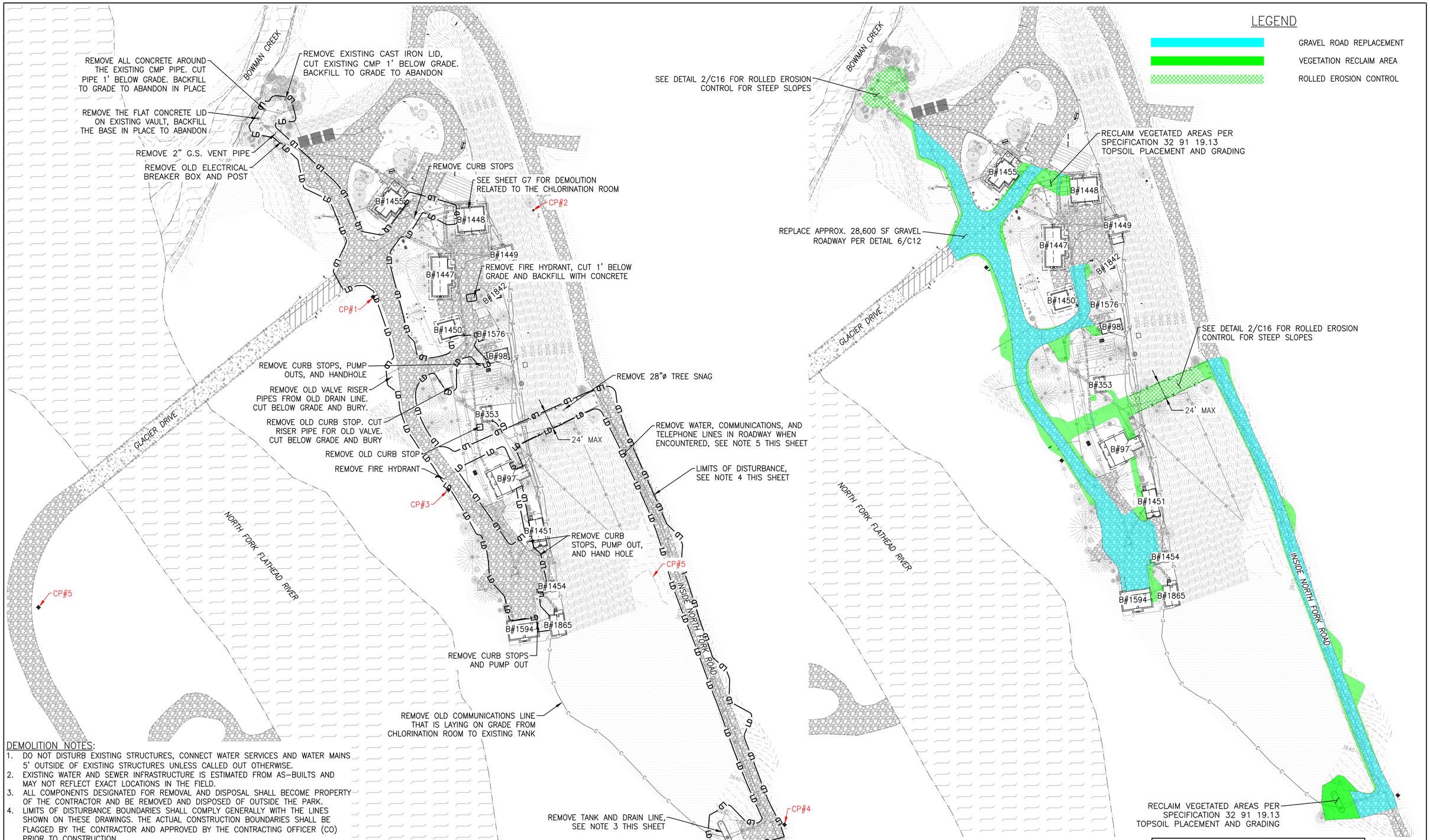

DEMOLITION NOTES:

1. DO NOT DISTURB EXISTING STRUCTURES, CONNECT WATER SERVICES AND WATER MAINS 5' OUTSIDE OF EXISTING STRUCTURES UNLESS CALLED OUT OTHERWISE.
2. EXISTING WATER AND SEWER INFRASTRUCTURE IS ESTIMATED FROM AS-BUILTS AND MAY NOT REFLECT EXACT LOCATIONS IN THE FIELD.
3. ALL COMPONENTS DESIGNATED FOR REMOVAL AND DISPOSAL SHALL BECOME PROPERTY OF THE CONTRACTOR AND BE REMOVED AND DISPOSED OF OUTSIDE THE PARK.
4. LIMITS OF DISTURBANCE BOUNDARIES SHALL COMPLY GENERALLY WITH THE LINES SHOWN ON THESE DRAWINGS. THE ACTUAL CONSTRUCTION BOUNDARIES SHALL BE FLAGGED BY THE CONTRACTOR AND APPROVED BY THE CONTRACTING OFFICER (CO) PRIOR TO CONSTRUCTION.
5. ABANDONED PIPES THAT ARE ENCOUNTERED IN THE TRENCH MUST BE REMOVED AND PLUGGED AT THE ENDS.
6. INSTALL EROSION CONTROL PER SHEET G6 – EROSION CONTROL PLAN.

Mark	REVISION	Date	Initial

DESIGNED: NELSON ENGINEERING
CADD NE
TECH. REVIEW:
DATE: 04/08/2026

SUB SHEET NO. G4

CONSTRUCTION DOCUMENTS

TITLE OF SHEET
DEMOLITION & RECLAMATION PLAN

GLACIER NATIONAL PARK
REHABILITATE POLEBRIDGE WATER SYSTEM

DRAWING NO. 117
197288
PMIS/PKG NO. 329234B
SHEET 5 OF 35

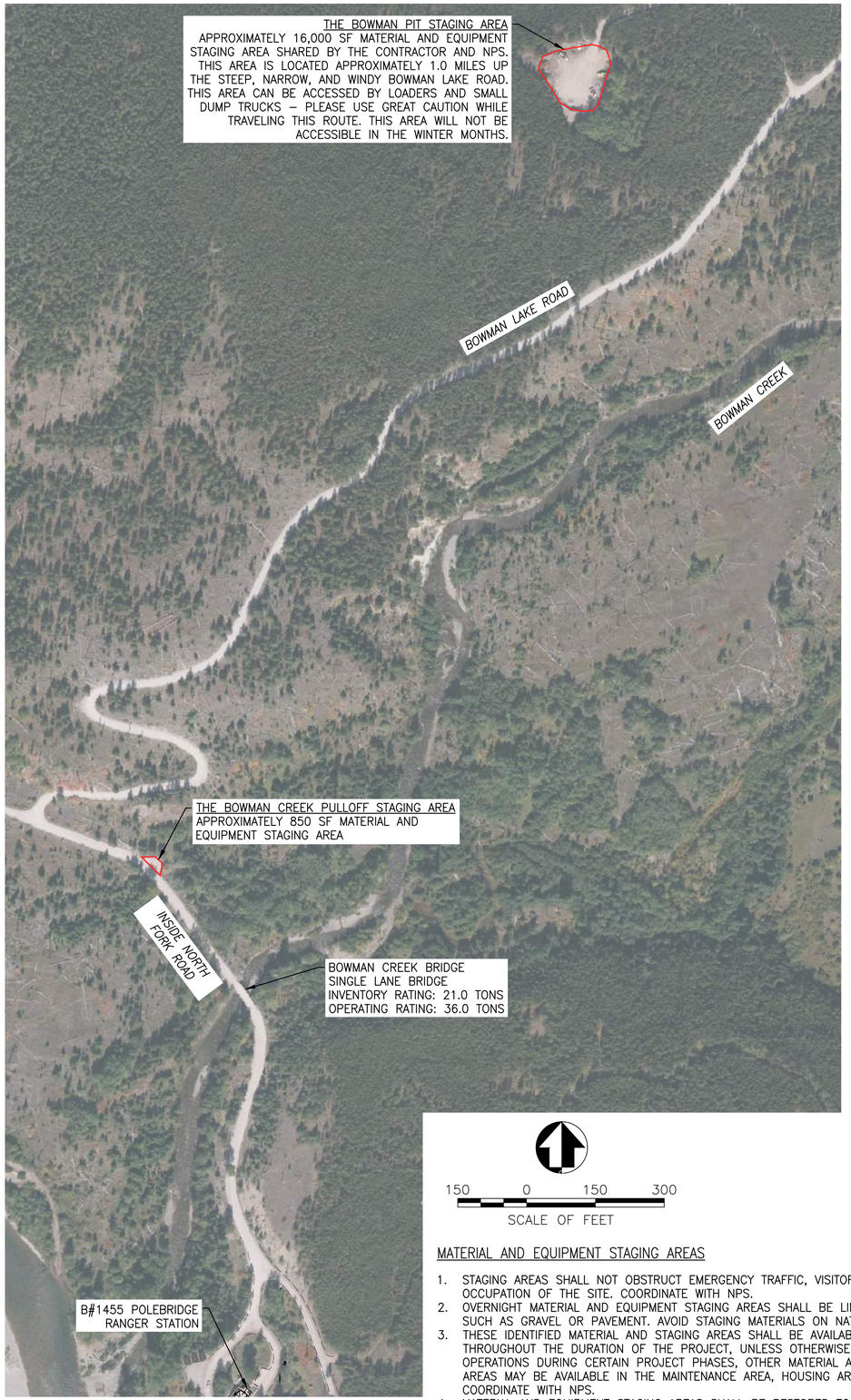

150 0 150 300
SCALE OF FEET

50 0 50 100
SCALE OF FEET

MATERIAL AND EQUIPMENT STAGING AREAS

1. STAGING AREAS SHALL NOT OBSTRUCT EMERGENCY TRAFFIC, VISITOR TRAFFIC, OR NPS USE AND OCCUPATION OF THE SITE. COORDINATE WITH NPS.
2. OVERNIGHT MATERIAL AND EQUIPMENT STAGING AREAS SHALL BE LIMITED TO HARDSCAPED AREAS SUCH AS GRAVEL OR PAVEMENT. AVOID STAGING MATERIALS ON NATURAL GROUND SURFACES.
3. THESE IDENTIFIED MATERIAL AND STAGING AREAS SHALL BE AVAILABLE FOR CONTRACTOR USE THROUGHOUT THE DURATION OF THE PROJECT, UNLESS OTHERWISE NOTED. DEPENDING ON NPS OPERATIONS DURING CERTAIN PROJECT PHASES, OTHER MATERIAL AND EQUIPMENT STAGING AREAS MAY BE AVAILABLE IN THE MAINTENANCE AREA, HOUSING AREA, OR WATER TANK AREA. COORDINATE WITH NPS.
4. MATERIAL AND EQUIPMENT STAGING AREAS SHALL BE RESTORED TO THEIR ORIGINAL CONDITION PRIOR TO PROJECT CLOSEOUT.

Mark	REVISION	Date	Initial

DESIGNED: NELSON ENGINEERING
CADD NE
TECH. REVIEW:
DATE: 04/08/2026

SUB SHEET NO. G5

CONSTRUCTION DOCUMENTS

TITLE OF SHEET
STAGING AREAS

GLACIER NATIONAL PARK
REHABILITATE POLEBRIDGE WATER SYSTEM

DRAWING NO. 117
197288
PMIS/PKG NO. 329234B
SHEET 6 OF 35

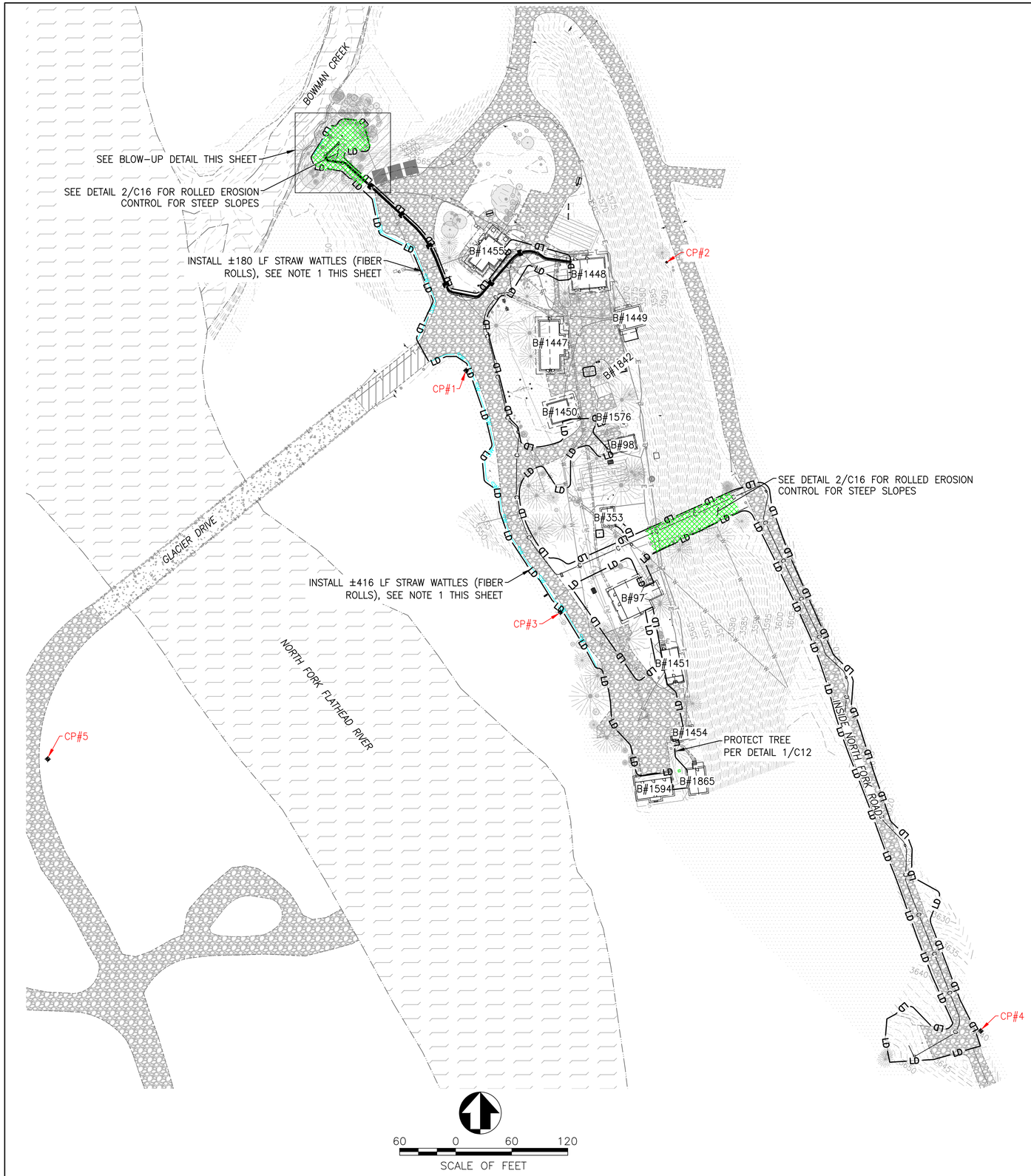

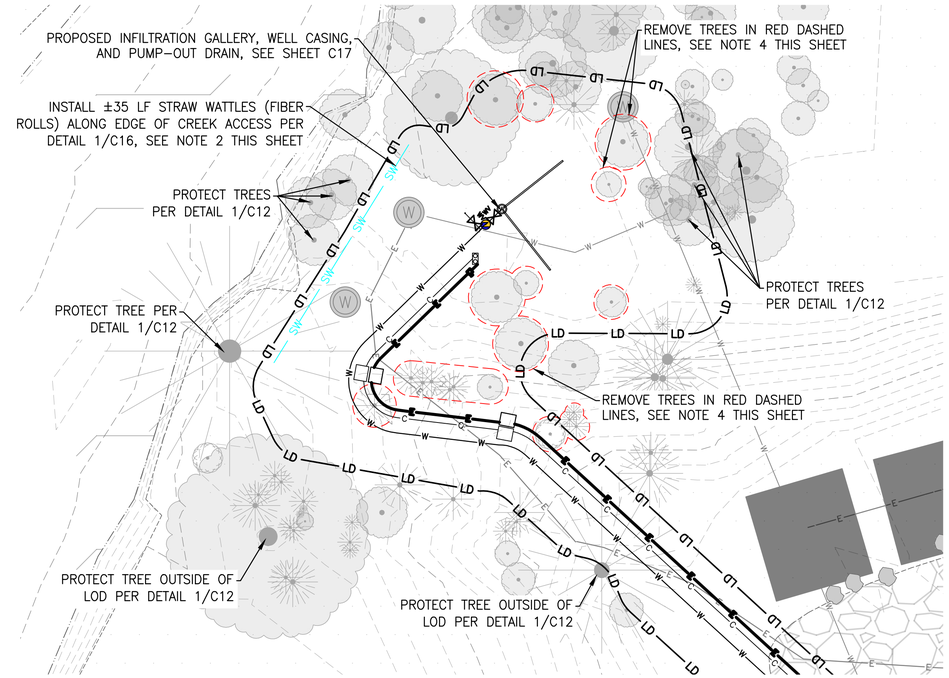

1 / G6 BLOW-UP DETAIL

10 0 10 20
SCALE OF FEET

LEGEND

SW SW SW SW	STRAW WATTLE
LD LD LD LD	LIMITS OF DISTURBANCE

NOTES:
1. STRAW WATTLES (FIBER ROLLS) SHALL BE 100% BIODEGRADABLE, SEE DETAIL 1/C16.
2. REMOVED VEGETATION SHOULD BE LAID OVER EXPOSED SOILS TO PROVIDE A NATURAL COVER TO LIMIT EROSION.
3. CONTRACTOR IS RESPONSIBLE FOR PREPARING AND SUBMITTING A SWPPP FOR APPROVAL BY THE CO.
4. MAXIMUM ALLOWABLE TREE REMOVALS ALLOWED IF NECESSARY FOR CONSTRUCTION OPERATIONS. OTHER TREES MAY REQUIRE BRANCH TRIMMING TO FACILITATE CONSTRUCTION OPERATIONS. THE CONTRACTOR SHALL MAKE EVERY EFFORT TO LIMIT TREE REMOVALS AND VEGETATION DISTURBANCE AREA TO THE LEAST IMPACT POSSIBLE. THE CONTRACTOR SHALL COORDINATE EQUIPMENT ACCESS ROUTES, EXCAVATION AREA, STOCKPILE AREA, TREE REMOVAL, AND VEGETATION REMOVAL WITH NPS.

Mark	REVISION	Date	Initial

DESIGNED: NELSON ENGINEERING
CADD: NE
TECH. REVIEW:
DATE: 04/08/2026

SUB SHEET NO. G6

CONSTRUCTION DOCUMENTS

TITLE OF SHEET
EROSION CONTROL PLAN

GLACIER NATIONAL PARK
REHABILITATE POLEBRIDGE WATER SYSTEM

DRAWING NO. 117
197288
PMIS/PKG NO. 329234B
SHEET 7 OF 35

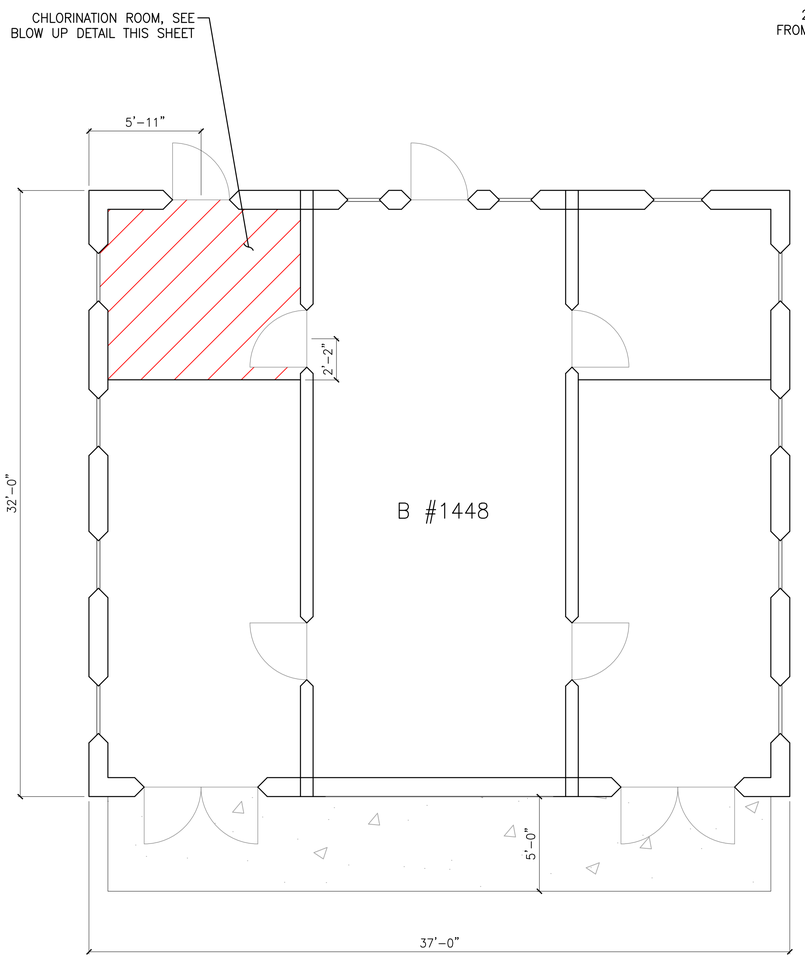

1 / G7 BUILDING #1448

SCALE: N.T.S.

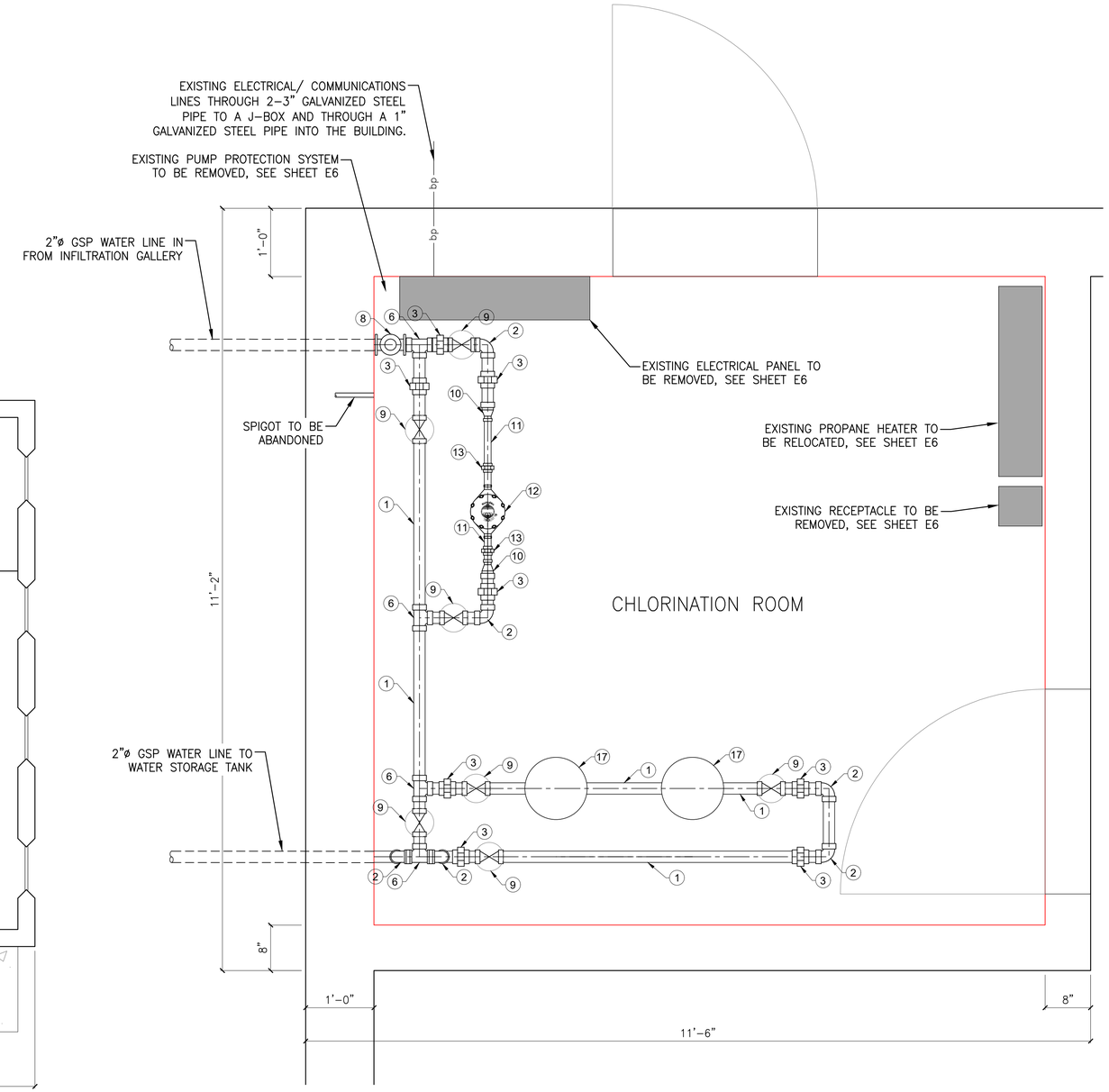

2 / G7 CHLORINATION ROOM BLOW-UP

SCALE: N.T.S.

ITEM	DESCRIPTION AND COMMENTS
1	2" GALV STL PIPE
2	2" 90° BEND
3	2" UNION
4	3/4" DRAIN COCK
5	2" CHECK VALVE
6	2" TEE
7	2" X 1/2" REDUCER
8	AIR RELEASE VALVE : APCO 1" NO. 50
9	2" GATE VALVE
10	2" X 1" REDUCER
11	1" GALV STL PIPE
12	1" WATER METER
13	1" UNION
14	2" X 3/4" REDUCTION
15	1" GATE VALVE
16	PRESSURE GAUGE
17	CARTRIDGE FILTER
18	PIPE STAND AND SUPPORT BRACING
19	3/4" HOSE BIB AND VALVE CONNECTION
20	1/2" FLEXIBLE TUBING
21	1/2" CHLORINE INJECTOR ASSEMBLY (NPT)

NOTE: THIS EQUIPMENT LIST IS ADAPTED FROM AS-BUILT DRAWINGS AND MAY NOT REFLECT RECENT ADDITIONS TO THE CHLORINATION ROOM.

Mark	REVISION	Date	Initial

DESIGNED: NELSON ENGINEERING
CADD NE
TECH. REVIEW:
DATE: 04/08/2026

SUB SHEET NO. G7

CONSTRUCTION DOCUMENTS

TITLE OF SHEET
EXISTING CHLORINATION ROOM

GLACIER NATIONAL PARK
REHABILITATE POLEBRIDGE WATER SYSTEM

DRAWING NO. 117
197288
PMIS/PKG NO. 329234B
SHEET 8 OF 35

LAYOUT: G7 EXISTING CHLORINATION RIDM#3604 - PRINTER/PC3: DWG To PDF.pc3 - PAGE SETUP: 22x34 PDF BW - Publish - DWG VER: R19 - PLOTTED BY: Abby King
DWG NAME: S:\Proj_2025\048-01 (Rehabilitate Polebridge Water System - Civil\4 Drawings\GLAC\329234B\Bases\VA-CHLORINE BUILDING.dwg - DATE/TIME: 11/24/2025 12:36:37 PM

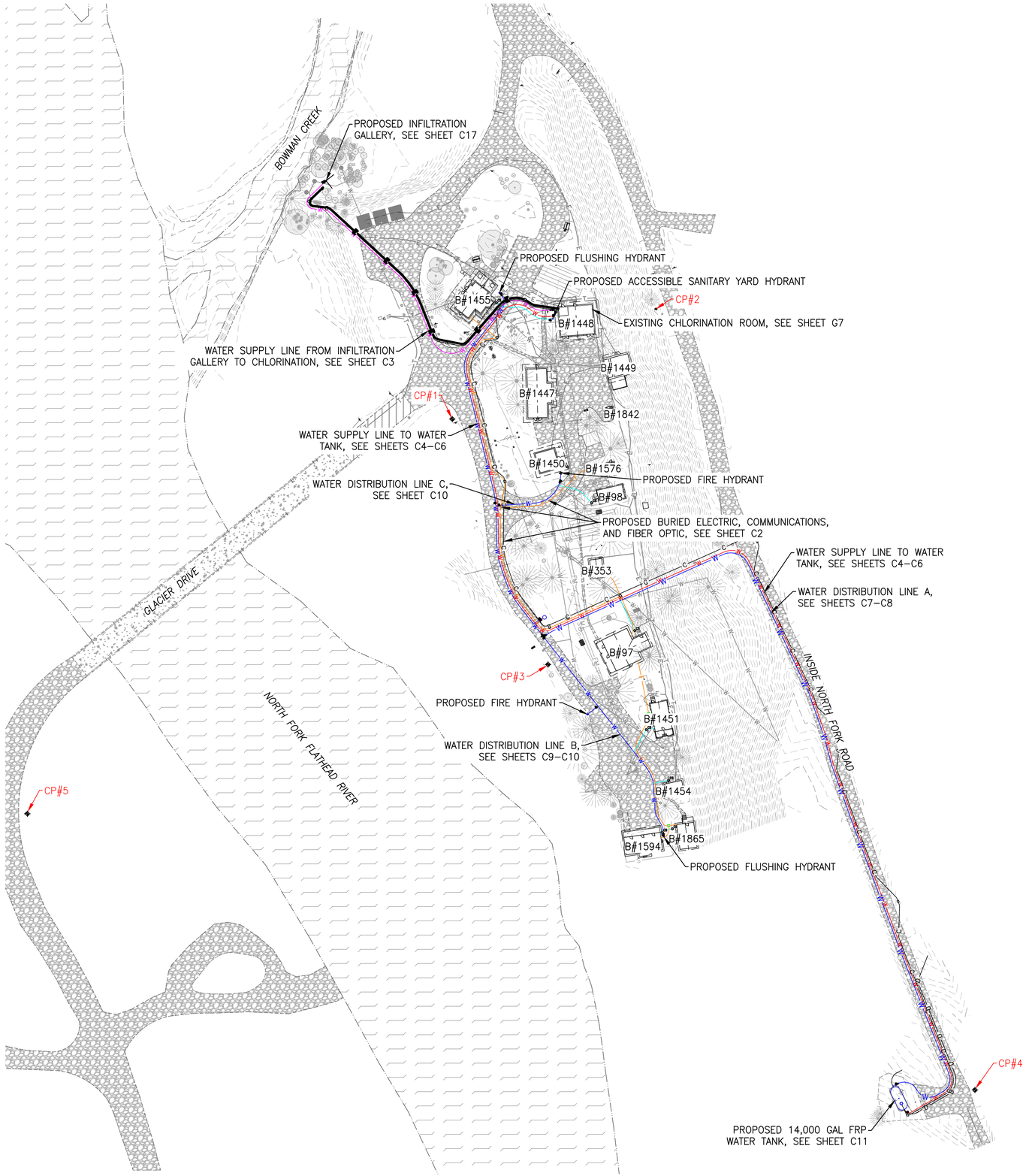

LEGEND

W W W	WATER SUPPLY TO CHLORINATION
W W W	WATER SUPPLY TO STORAGE TANK
W W W	WATER DISTRIBUTION MAIN
W W W	WATER SERVICE
E E E	BURIED ELECTRIC
C C C	BURIED COMMUNICATIONS
F F F	BURIED FIBER OPTIC

60 0 60 120

SCALE OF FEET

CONTRACTOR NOTE:
CAUTION: UNDERGROUND UTILITY LOCATIONS ARE NOT GUARANTEED, NOR IS THERE ANY GUARANTEE THAT ALL EXISTING UTILITIES (WHETHER FUNCTIONAL OR ABANDONED) WITHIN THE PROJECT AREA ARE SHOWN ON THESE DRAWINGS. THE CONTRACTOR SHALL DETERMINE THE EXACT LOCATION OF ALL UNDERGROUND UTILITIES BEFORE STARTING WORK. THE CONTRACTOR SHALL BE RESPONSIBLE FOR ALL DAMAGE RESULTING FROM CONTRACTORS WORK.

CONSTRUCTION DOCUMENTS

Mark	REVISION	Date	Initial

DESIGNED: NELSON ENGINEERING
CADD NE
TECH. REVIEW:
DATE: 04/08/2026

SUB SHEET NO. C1

TITLE OF SHEET
WATER IMPROVEMENTS OVERVIEW

GLACIER NATIONAL PARK
REHABILITATE POLEBRIDGE WATER SYSTEM

DRAWING NO. 117
197288
PMIS/PKG NO. 329234B
SHEET 9 OF 35

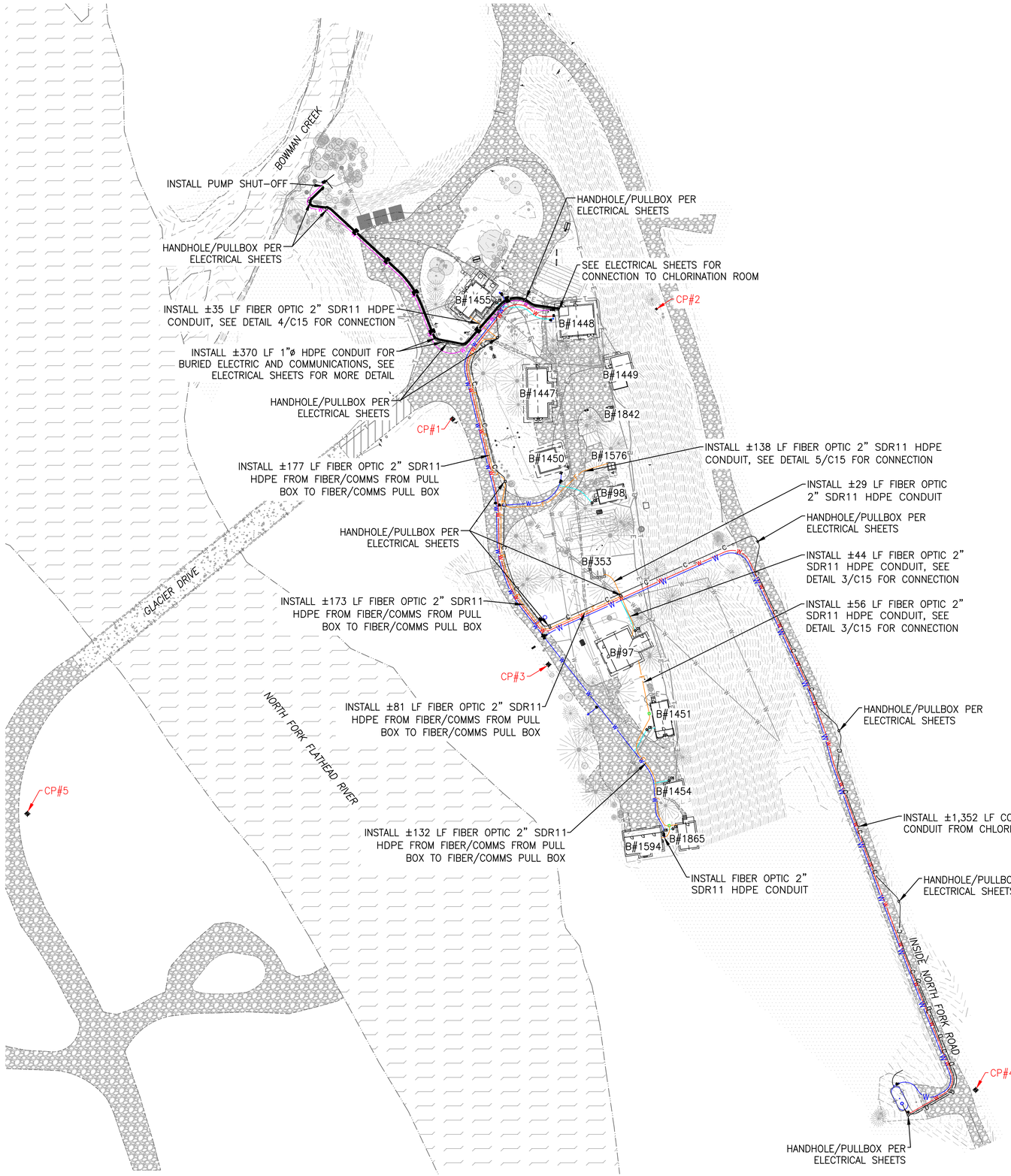

LEGEND

W W W	WATER SUPPLY TO CHLORINATION
W W W	WATER SUPPLY TO STORAGE TANK
W W W	WATER DISTRIBUTION MAIN
W W W	WATER SERVICE
E E E	BURIED ELECTRIC
F F F	BURIED FIBER OPTIC

NOTES:
1. SEE SHEET C12 FOR TRENCHING CONFIGURATIONS AND DETAILS.
2. SEE ELECTRICAL SHEETS FOR ALL BURIED ELECTRIC PULL BOX LOCATIONS.

60 0 60 120
SCALE OF FEET

CONTRACTOR NOTE:
CAUTION: UNDERGROUND UTILITY LOCATIONS ARE NOT GUARANTEED, NOR IS THERE ANY GUARANTEE THAT ALL EXISTING UTILITIES (WHETHER FUNCTIONAL OR ABANDONED) WITHIN THE PROJECT AREA ARE SHOWN ON THESE DRAWINGS. THE CONTRACTOR SHALL DETERMINE THE EXACT LOCATION OF ALL UNDERGROUND UTILITIES BEFORE STARTING WORK. THE CONTRACTOR SHALL BE RESPONSIBLE FOR ALL DAMAGE RESULTING FROM CONTRACTORS WORK.

Mark	REVISION	Date	Initial

DESIGNED: NELSON ENGINEERING
CADD NE
TECH. REVIEW:
DATE: 04/08/2026

SUB SHEET NO. C2

CONSTRUCTION DOCUMENTS

TITLE OF SHEET
FIBER, BURIED ELECTRIC & COMMS PLAN

GLACIER NATIONAL PARK
REHABILITATE POLEBRIDGE WATER SYSTEM

DRAWING NO. 117 197288
PMIS/PKG NO. 329234B
SHEET 10 OF 35

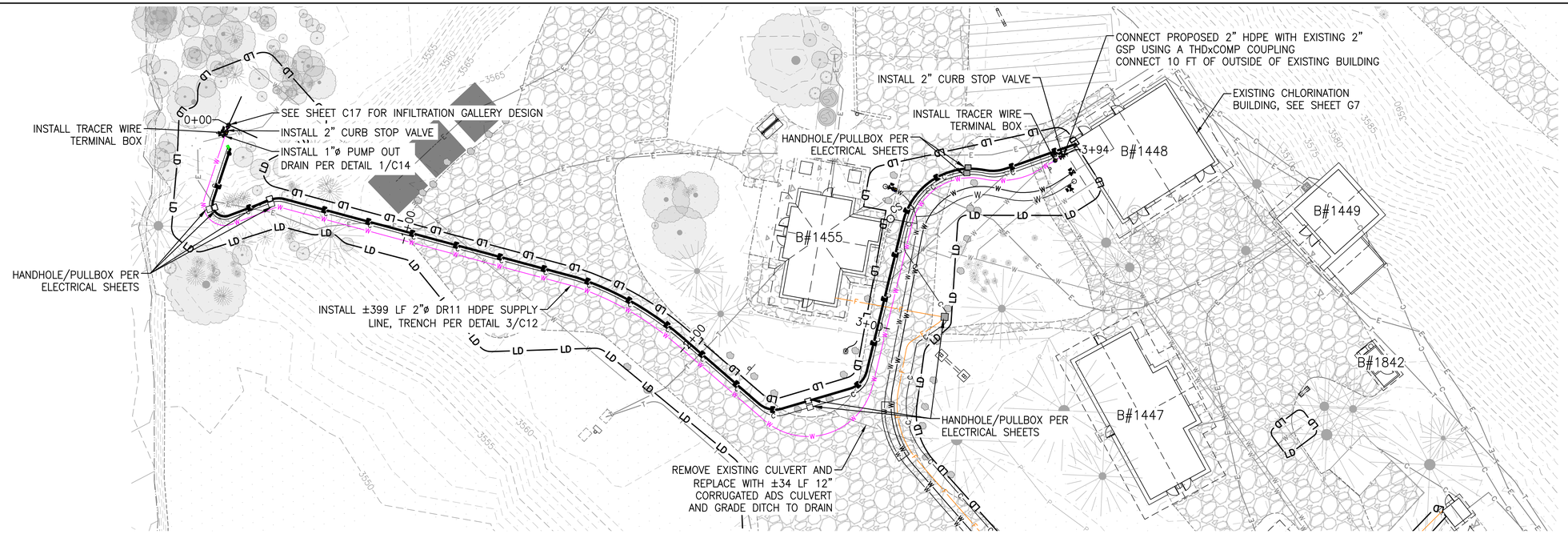

CONTRACTOR NOTE:
CAUTION: UNDERGROUND UTILITY LOCATIONS ARE NOT GUARANTEED, NOR IS THERE ANY GUARANTEE THAT ALL EXISTING UTILITIES (WHETHER FUNCTIONAL OR ABANDONED) WITHIN THE PROJECT AREA ARE SHOWN ON THESE DRAWINGS. THE CONTRACTOR SHALL DETERMINE THE EXACT LOCATION OF ALL UNDERGROUND UTILITIES BEFORE STARTING WORK. THE CONTRACTOR SHALL BE RESPONSIBLE FOR ALL DAMAGE RESULTING FROM CONTRACTORS WORK.

20 0 20 40
SCALE OF FEET

NOTES:
1. GRAVEL SURFACE SHALL BE REPAIRED PER PROJECT SPECIFICATIONS AND DETAILS.
2. ALL EXISTING WATER AND SEWER UTILITY LOCATIONS ARE APPROXIMATE AND NOTED FROM NPS GIS DATA AND AS-BUILT DRAWINGS.
3. ALL UTILITY CROSSINGS ARE APPROXIMATE AND NOTED FROM NPS GIS DATA AND AS-BUILT DRAWINGS AND SHOULD BE CONFIRMED IN THE FIELD.

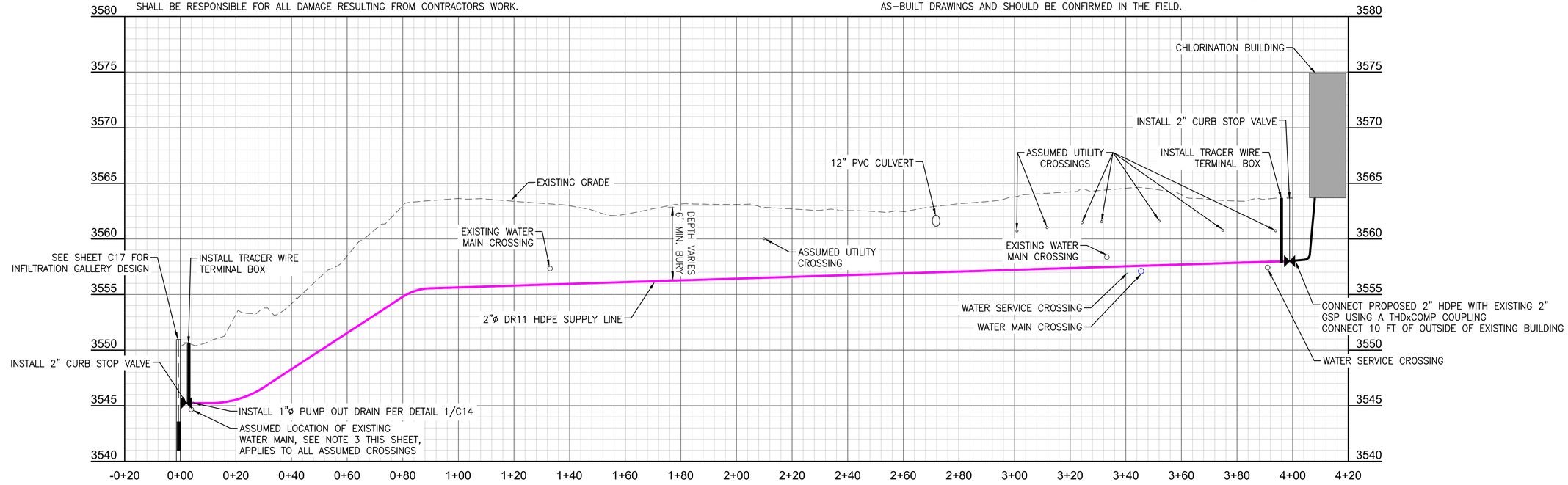

PROFILE SCALE
20 0 20 40 (HORIZ)
SCALE OF FEET
5 0 5 10 (VERT)
SCALE OF FEET

Mark	REVISION	Date	Initial

DESIGNED: NELSON ENGINEERING
CADD NE
TECH. REVIEW:
DATE: 04/08/2026

SUB SHEET NO. C3

CONSTRUCTION DOCUMENTS

TITLE OF SHEET
WATER SUPPLY TO CHLORINATION P&P 0+00 – 4+20
GLACIER NATIONAL PARK
REHABILITATE POLEBRIDGE WATER SYSTEM

DRAWING NO. 117
197288
PMIS/PKG NO. 329234B
SHEET 11 OF 35

LAYOUT: WATER SUPPLY TO CHLORINATION P&P 0+00 - 4+20MIC45 - PRINTER/PC3 DWG To PDF.pc3 - PAGE SETUP: 22x34 PDF BW - Publish - DWG VER 25.0 - PLOTTED BY: Abby King
DWG NAME: S:\Proj2025\049-01 (Rehabilitate Polebridge Water System - Civil\4 Drawings\CD\AC\329234B\Civil\C3 DESIGN.dwg - DATE/TIME: 10/24/2025 10:39:42 PM

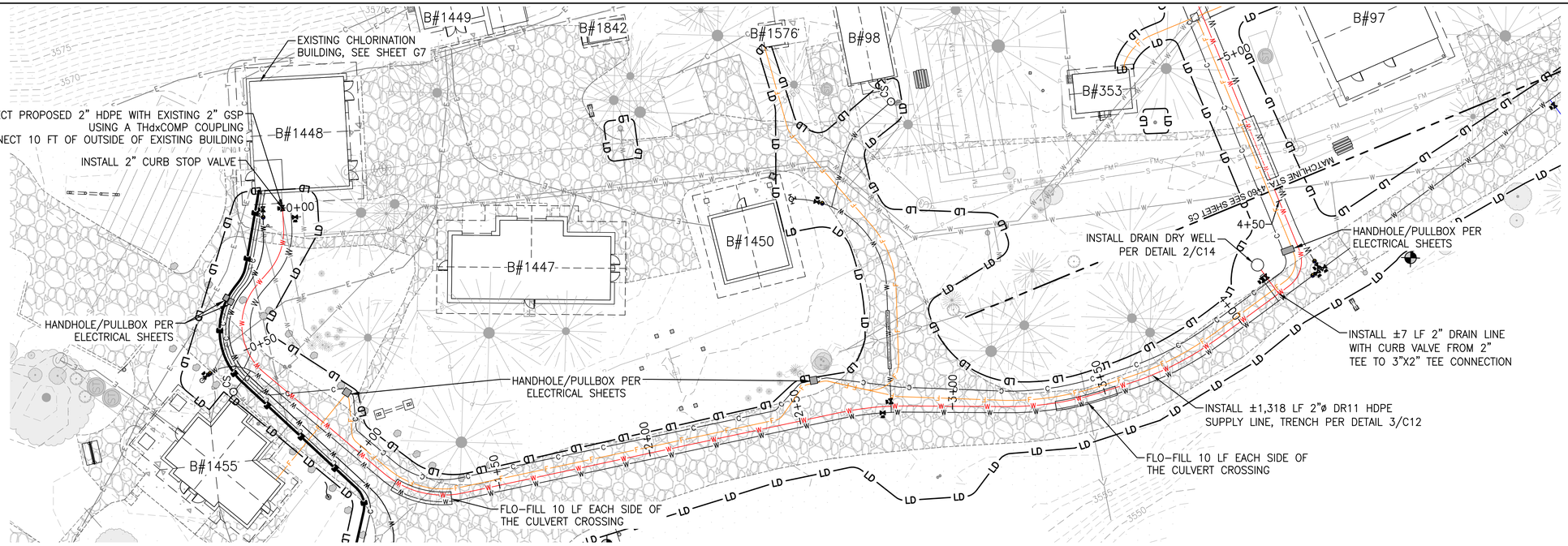

CONTRACTOR NOTE:
CAUTION: UNDERGROUND UTILITY LOCATIONS ARE NOT GUARANTEED, NOR IS THERE ANY GUARANTEE THAT ALL EXISTING UTILITIES (WHETHER FUNCTIONAL OR ABANDONED) WITHIN THE PROJECT AREA ARE SHOWN ON THESE DRAWINGS. THE CONTRACTOR SHALL DETERMINE THE EXACT LOCATION OF ALL UNDERGROUND UTILITIES BEFORE STARTING WORK. THE CONTRACTOR SHALL BE RESPONSIBLE FOR ALL DAMAGE RESULTING FROM CONTRACTOR'S WORK.

20 0 20 40
SCALE OF FEET

NOTES:
1. GRAVEL SURFACE SHALL BE REPAIRED PER PROJECT SPECIFICATIONS AND DETAILS.
2. ALL EXISTING WATER AND SEWER UTILITY LOCATIONS ARE APPROXIMATE AND NOTED FROM NPS GIS DATA AND AS-BUILT DRAWINGS.
3. ALL UTILITY CROSSINGS ARE APPROXIMATE AND NOTED FROM NPS GIS DATA AND AS-BUILT DRAWINGS AND SHOULD BE CONFIRMED IN THE FIELD.

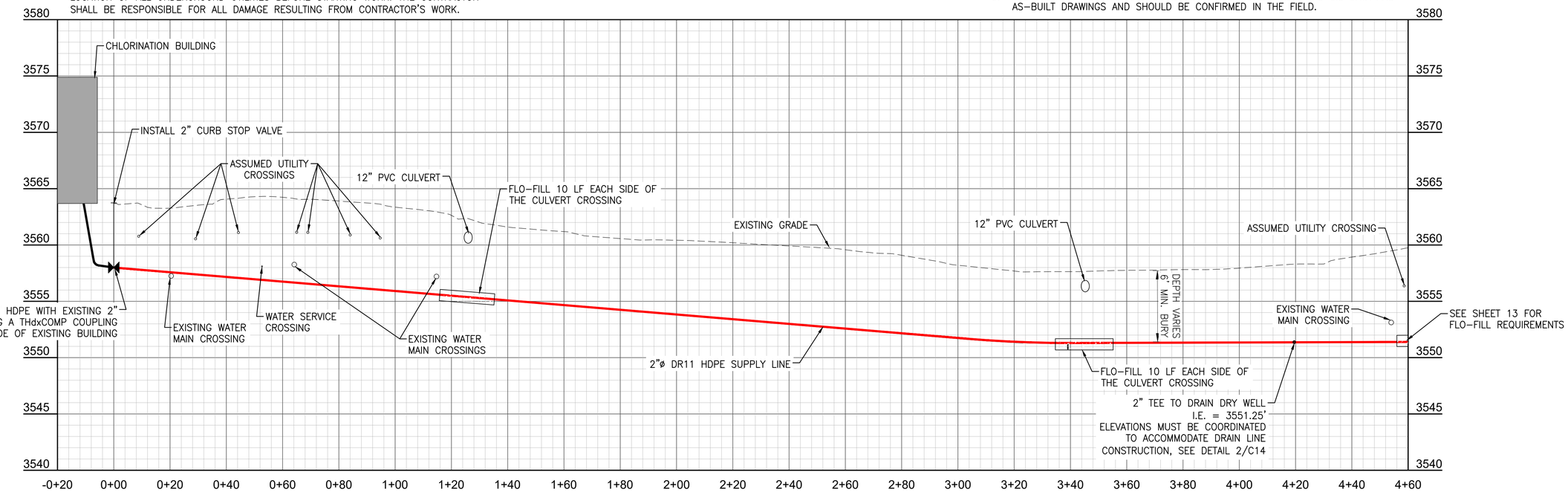

PROFILE SCALE
20 0 20 40 (HORIZ)
SCALE OF FEET
5 0 5 10 (VERT)
SCALE OF FEET

Mark	REVISION	Date	Initial

DESIGNED: NELSON ENGINEERING
CADD: NE
TECH. REVIEW:
DATE: 04/08/2026

SUB SHEET NO. C4

CONSTRUCTION DOCUMENTS

TITLE OF SHEET
WATER SUPPLY TO TANK P&P 0+00 – 4+60

GLACIER NATIONAL PARK
REHABILITATE POLEBRIDGE WATER SYSTEM

DRAWING NO. 117 / 197288
PMIS/PKG NO. 329234B
SHEET 12 OF 35

LAYOUT: WATER SUPPLY TO TANK P&P 0+00 - 4+60(N1484 - PRINTER/PC3: DWG To PDF.pc3 - PAGE SETUP: 22x34 PDF BW - Publish - DWG VER: 25.0 - PLOTTED BY: Abby King
DWG NAME: S:\Proj_2025\048-01 (Rehabilitate Polebridge Water System - Civil\4 Drawings\CL_AC\329234B\Civil\C4 DESIGN.dwg - DATE/TIME: 10/24/2025 12:19:42 PM

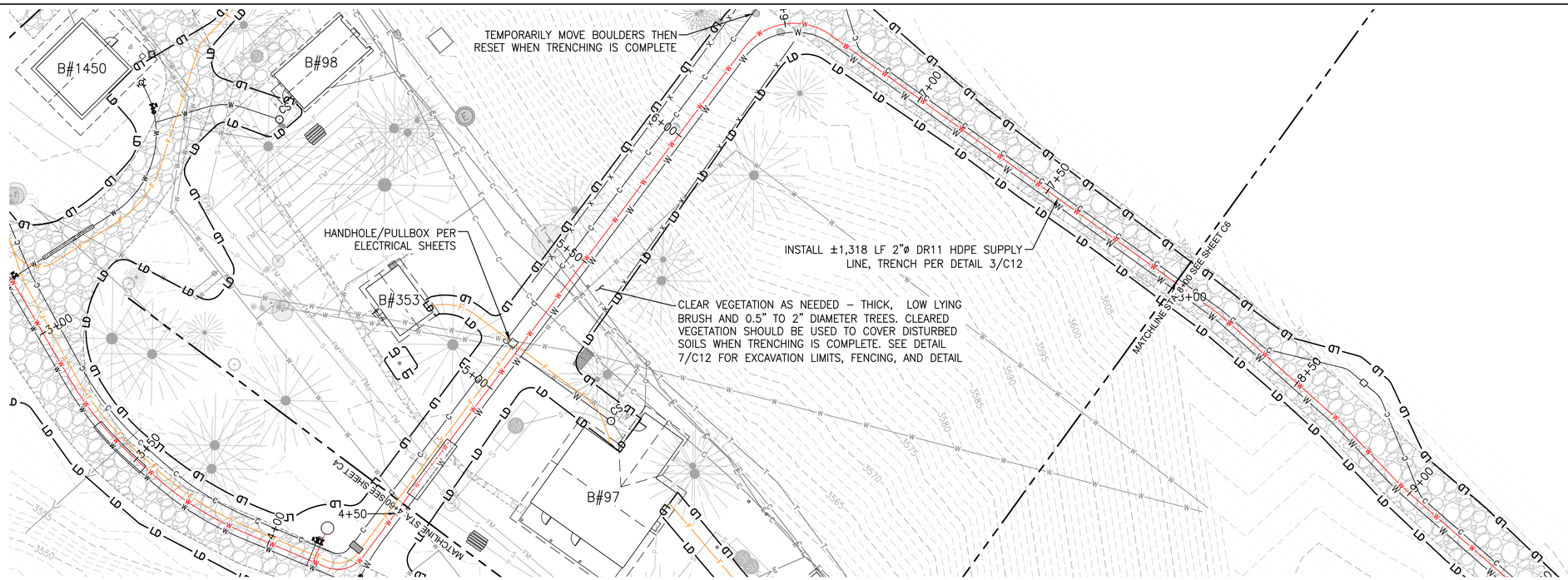

20 0 20 40
SCALE OF FEET

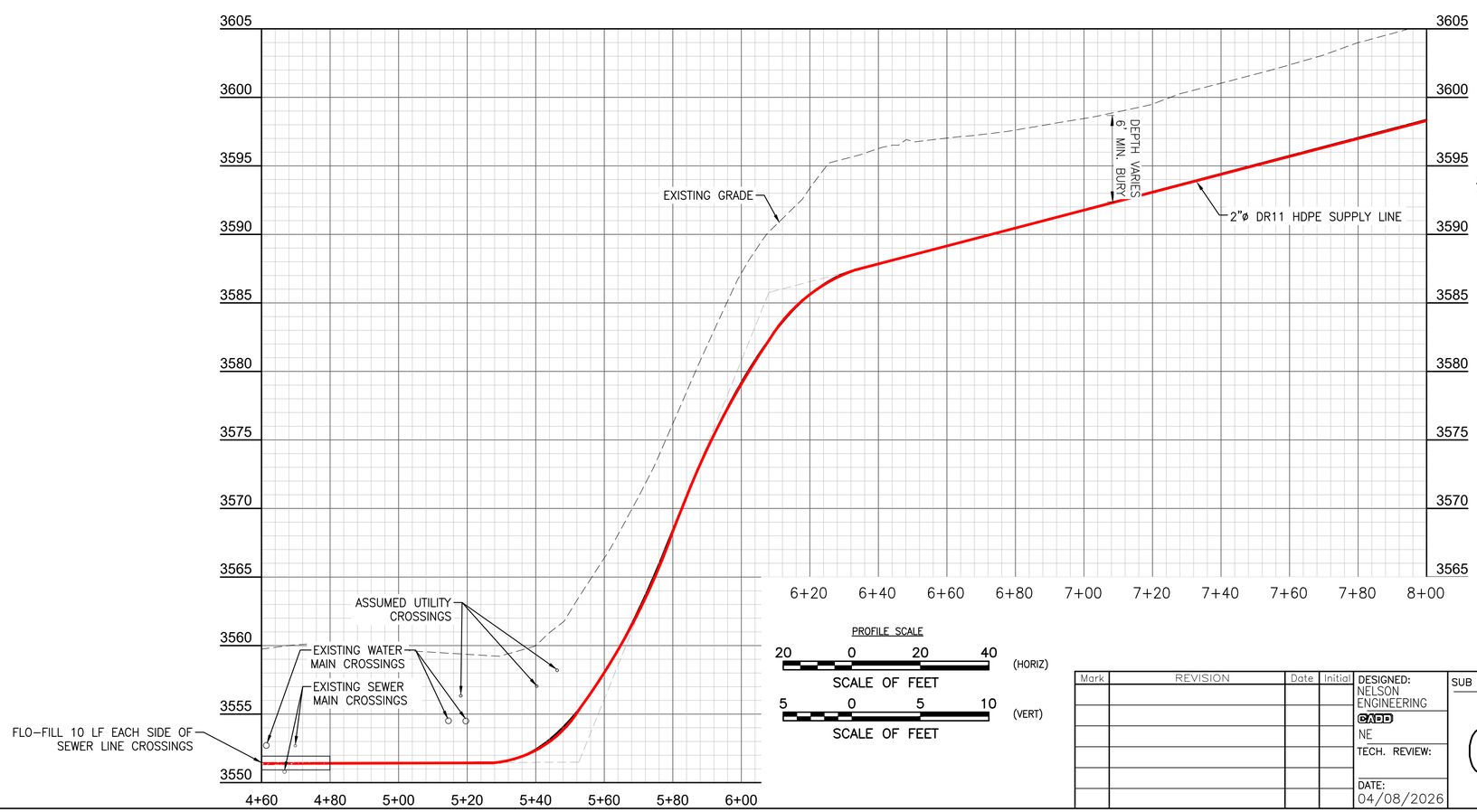

PROFILE SCALE

20 0 20 40 (HORIZ)
SCALE OF FEET

5 0 5 10 (VERT)
SCALE OF FEET

NOTES:
1. GRAVEL SURFACE SHALL BE REPAIRED PER PROJECT SPECIFICATIONS AND DETAILS.
2. ALL EXISTING WATER AND SEWER UTILITY LOCATIONS ARE APPROXIMATE AND NOTED FROM NPS GIS DATA AND AS-BUILT DRAWINGS.
3. ALL UTILITY CROSSINGS ARE APPROXIMATE AND NOTED FROM NPS GIS DATA AND AS-BUILT DRAWINGS AND SHOULD BE CONFIRMED IN THE FIELD.

CONTRACTOR NOTE:
CAUTION: UNDERGROUND UTILITY LOCATIONS ARE NOT GUARANTEED, NOR IS THERE ANY GUARANTEE THAT ALL EXISTING UTILITIES (WHETHER FUNCTIONAL OR ABANDONED) WITHIN THE PROJECT AREA ARE SHOWN ON THESE DRAWINGS. THE CONTRACTOR SHALL DETERMINE THE EXACT LOCATION OF ALL UNDERGROUND UTILITIES BEFORE STARTING WORK. THE CONTRACTOR SHALL BE RESPONSIBLE FOR ALL DAMAGE RESULTING FROM CONTRACTORS WORK.

Mark	REVISION	Date	Initial

DESIGNED: NELSON ENGINEERING
CADD NE
TECH. REVIEW:
DATE: 04/08/2026

SUB SHEET NO. C5

CONSTRUCTION DOCUMENTS

TITLE OF SHEET
WATER SUPPLY TO TANK
P&P 4+60 – 8+00

GLACIER NATIONAL PARK
REHABILITATE POLEBRIDGE WATER SYSTEM

DRAWING NO. 117
197288
PMIS/PKG NO. 329234B
SHEET 13 OF 35

LAYOUT: WATER SUPPLY TO TANK P&P 4+60 - 8+00#10538 - PRINTER/PC3 DWG To PDF.pc3 - PAGE SETUP: 22x34 PDF BW - Publish - DWG VER: 2510 - PLOTTED BY: Abby King
DWG NAME: S:\Proj_2025\048-01 (Rehabilitate Polebridge Water System - Civil\4 Drawings\CAD\329234B\Civil\C3 DESIGN.dwg - DATE/TIME: 10/24/2025 12:19:42 PM

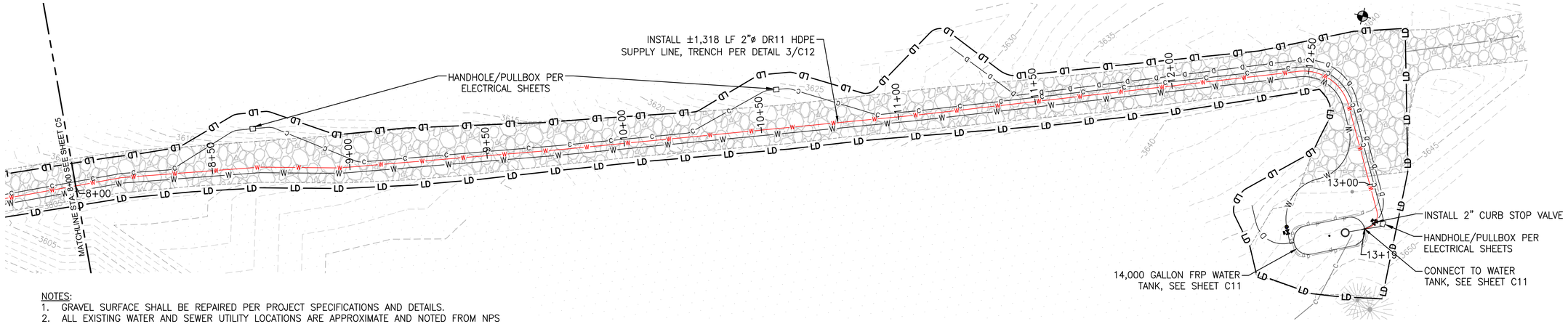

NOTES:
1. GRAVEL SURFACE SHALL BE REPAIRED PER PROJECT SPECIFICATIONS AND DETAILS.
2. ALL EXISTING WATER AND SEWER UTILITY LOCATIONS ARE APPROXIMATE AND NOTED FROM NPS GIS DATA AND AS-BUILT DRAWINGS.
3. ALL UTILITY CROSSINGS ARE APPROXIMATE AND NOTED FROM NPS GIS DATA AND AS-BUILT DRAWINGS AND SHOULD BE CONFIRMED IN THE FIELD.
4. ALL TRENCHING, STOCKPILING, AND EQUIPMENT ACTIVITY ALONG THE INSIDE NORTH FORK ROAD SHALL OCCUR WITHIN THE GRAVEL ROAD CORRIDOR. THE CONTRACTOR SHALL MAKE EFFORT TO PROTECT AND PRESERVE VEGETATION ALONG THE INSIDE NORTH FORK ROAD.

20 0 20 40
SCALE OF FEET

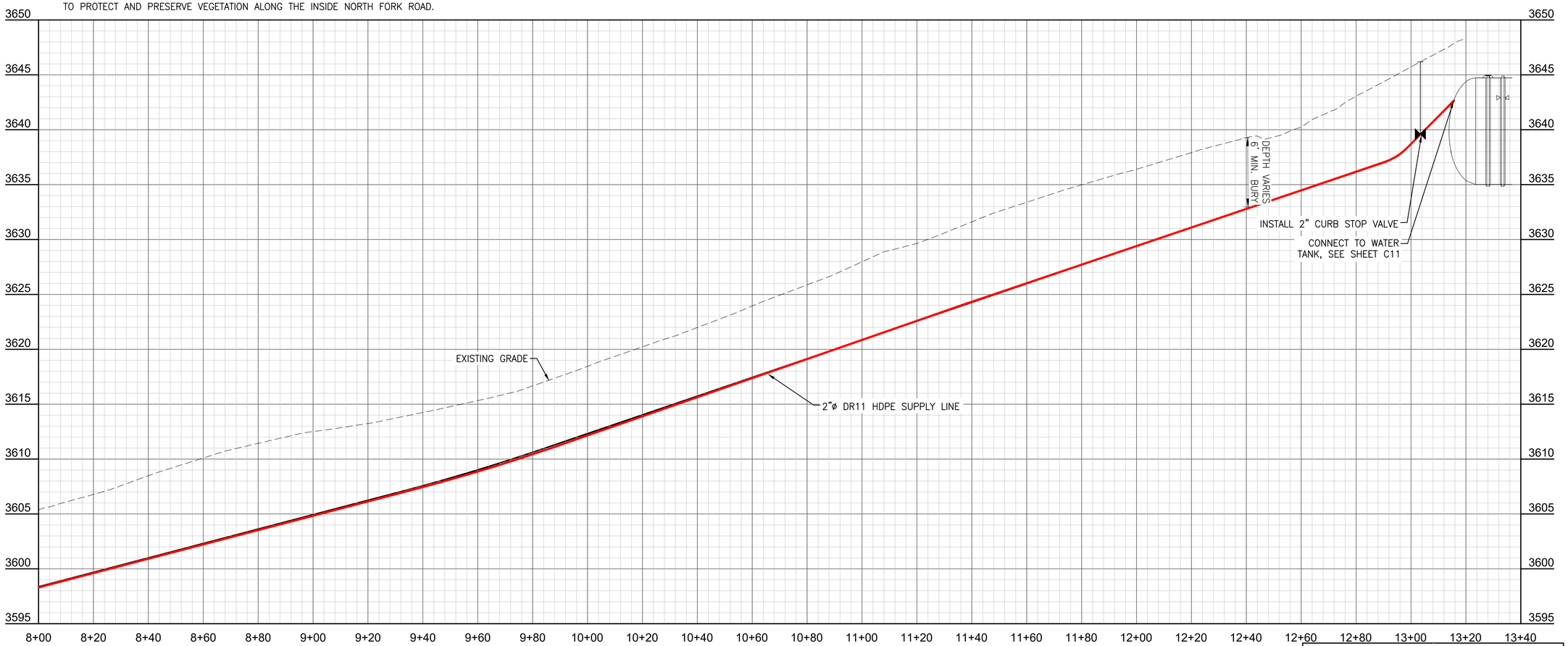

PROFILE SCALE

20 0 20 40 (HORIZ)
SCALE OF FEET

5 0 5 10 (VERT)
SCALE OF FEET

CONTRACTOR NOTE:
CAUTION: UNDERGROUND UTILITY LOCATIONS ARE NOT GUARANTEED, NOR IS THERE ANY GUARANTEE THAT ALL EXISTING UTILITIES (WHETHER FUNCTIONAL OR ABANDONED) WITHIN THE PROJECT AREA ARE SHOWN ON THESE DRAWINGS. THE CONTRACTOR SHALL DETERMINE THE EXACT LOCATION OF ALL UNDERGROUND UTILITIES BEFORE STARTING WORK. THE CONTRACTOR SHALL BE RESPONSIBLE FOR ALL DAMAGE RESULTING FROM CONTRACTORS WORK.

Mark	REVISION	Date	Initial

DESIGNED: NELSON ENGINEERING
CADD NE
TECH. REVIEW:
DATE: 04/08/2026

SUB SHEET NO. C6

CONSTRUCTION DOCUMENTS

TITLE OF SHEET
WATER SUPPLY TO TANK
P&P 8+00 – 13+40

GLACIER NATIONAL PARK
REHABILITATE POLEBRIDGE WATER SYSTEM

DRAWING NO. 117
197288
PMIS/PKG NO. 329234B
SHEET 14 OF 35

LAYOUT: WATER SUPPLY TO TANK P&P 8+00 - 13+40*D315 - PRINTER/PC3 DWG To PDF.pc3 - PAGE SETUP: 22x34 PDF BW - Publish - DWG VER: 25.0 - PLOTTED BY: Abby King
DWG NAME: S:\Proj2025\048-01 Rehabilitate Polebridge Water System - Civil\4 Drawings\GA\AC\329234B\Civil\C6 DESIGN.dwg - DATE/TIME: 10/24/2025 12:19:42 PM

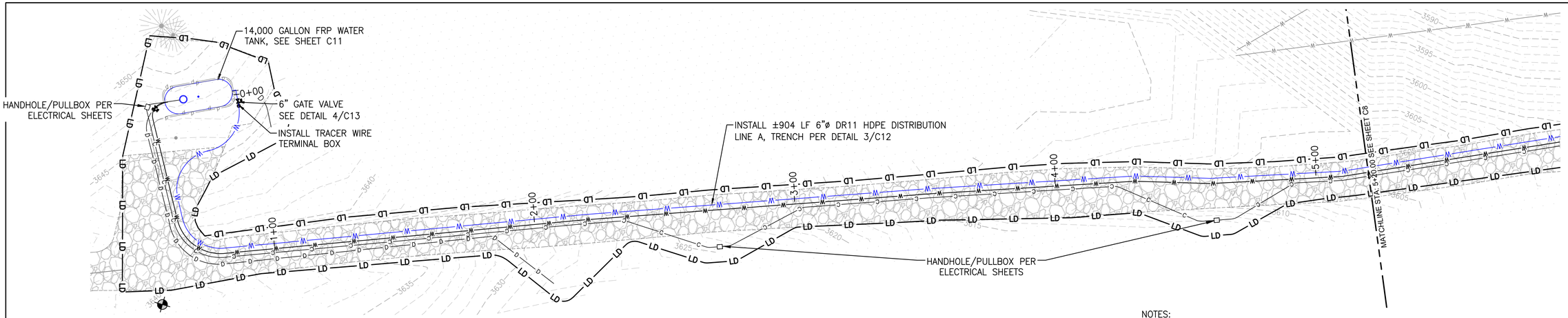

20 0 20 40
SCALE OF FEET

NOTES:
1. GRAVEL SURFACE SHALL BE REPAIRED PER PROJECT SPECIFICATIONS AND DETAILS.
2. ALL EXISTING WATER AND SEWER UTILITY LOCATIONS ARE APPROXIMATE AND NOTED FROM NPS GIS DATA AND AS-BUILT DRAWINGS.
3. ALL UTILITY CROSSINGS ARE APPROXIMATE AND NOTED FROM NPS GIS DATA AND AS-BUILT DRAWINGS AND SHOULD BE CONFIRMED IN THE FIELD.

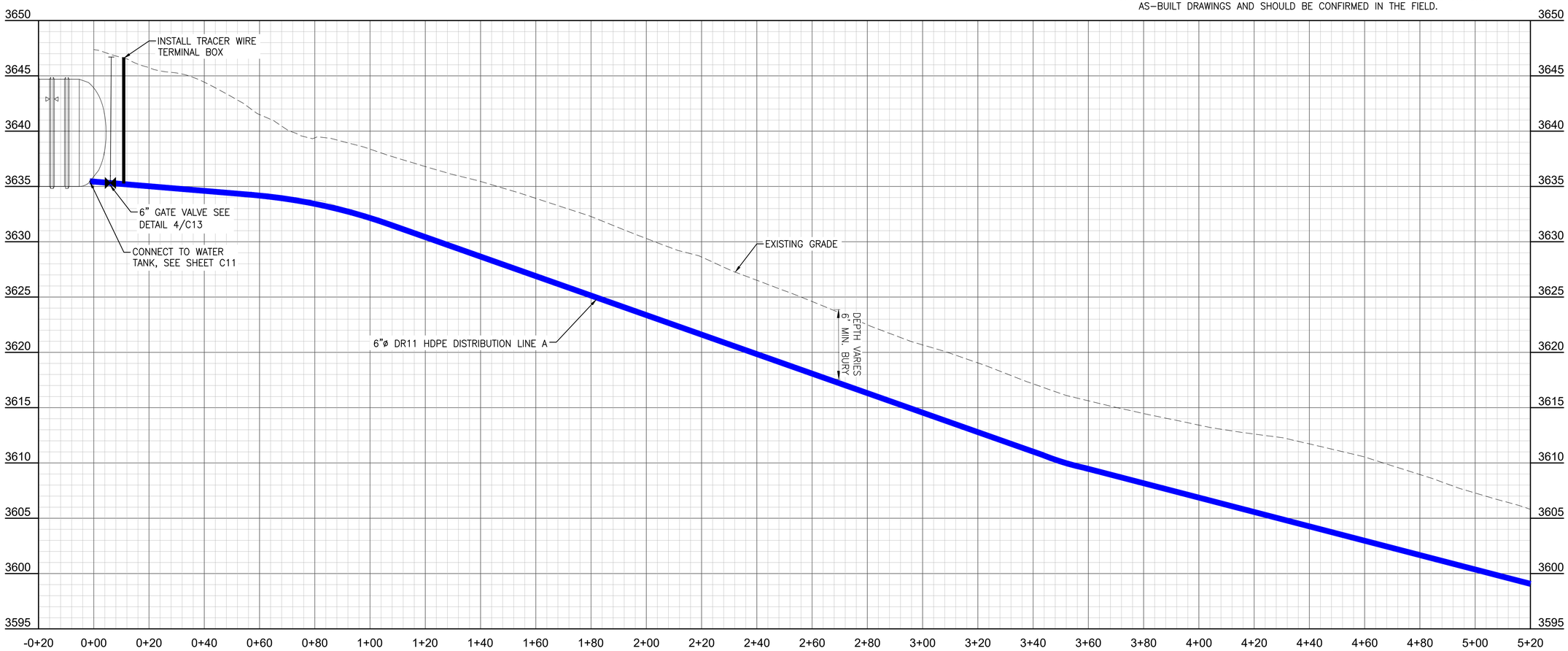

CONTRACTOR NOTE:
CAUTION: UNDERGROUND UTILITY LOCATIONS ARE NOT GUARANTEED, NOR IS THERE ANY GUARANTEE THAT ALL EXISTING UTILITIES (WHETHER FUNCTIONAL OR ABANDONED) WITHIN THE PROJECT AREA ARE SHOWN ON THESE DRAWINGS. THE CONTRACTOR SHALL DETERMINE THE EXACT LOCATION OF ALL UNDERGROUND UTILITIES BEFORE STARTING WORK. THE CONTRACTOR SHALL BE RESPONSIBLE FOR ALL DAMAGE RESULTING FROM CONTRACTORS WORK.

PROFILE SCALE
20 0 20 40 (HORIZ)
SCALE OF FEET
5 0 5 10 (VERT)
SCALE OF FEET

Mark	REVISION	Date	Initial

DESIGNED: NELSON ENGINEERING
CADD NE
TECH. REVIEW:
DATE: 04/08/2026

SUB SHEET NO. C7

CONSTRUCTION DOCUMENTS

TITLE OF SHEET
WATER DISTRIBUTION A
P&P 0+00 – 5+20

GLACIER NATIONAL PARK
REHABILITATE POLEBRIDGE WATER SYSTEM

DRAWING NO. 117
197288
PMIS/PKG NO. 329234B
SHEET 15 OF 35

LAYOUT: WATER DISTRIBUTION A P&P 0+00 - 5+20M1060F - PRINTER/PC3: DWG To PDF.pc3 - PAGE SETUP: 22x34 PDF BW - Publish - DWG VER: 25.0 - PLOTTED BY: Abby King
DWG NAME: S:\Proj2025\048-01 Rehabilitate Polebridge Water System - Civil\4 Drawings\GLAC\329234B\Civil\C7 DESIGN.dwg - DATE/TIME: 10/24/2025 12:19:42 PM

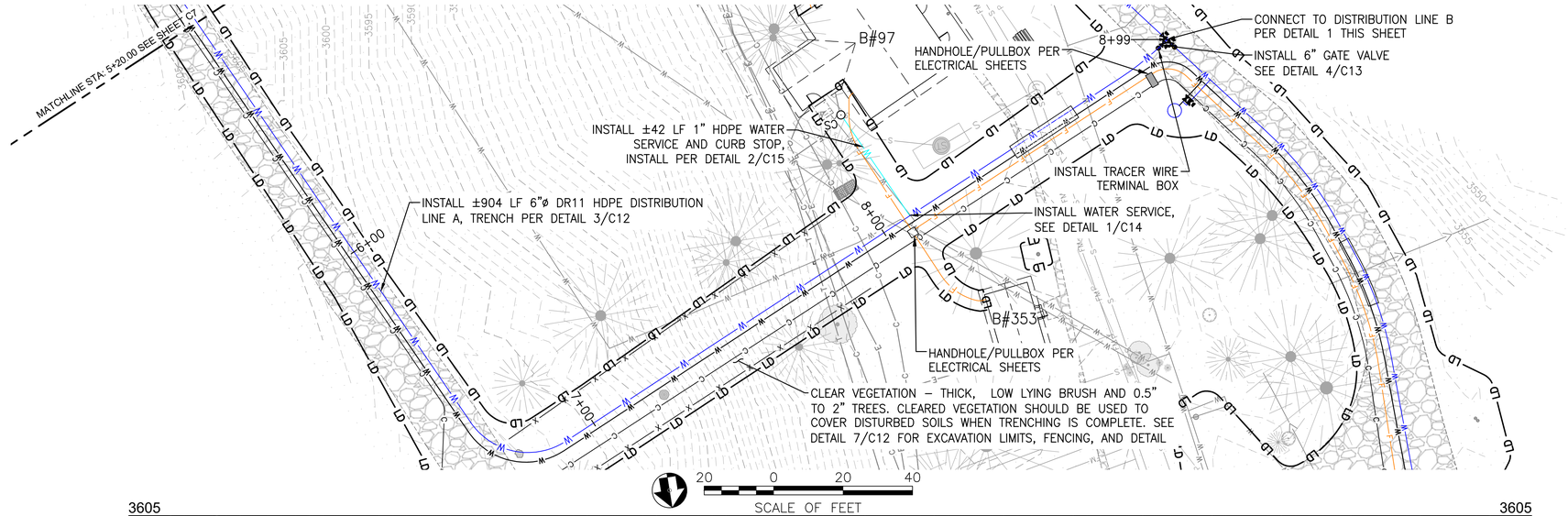

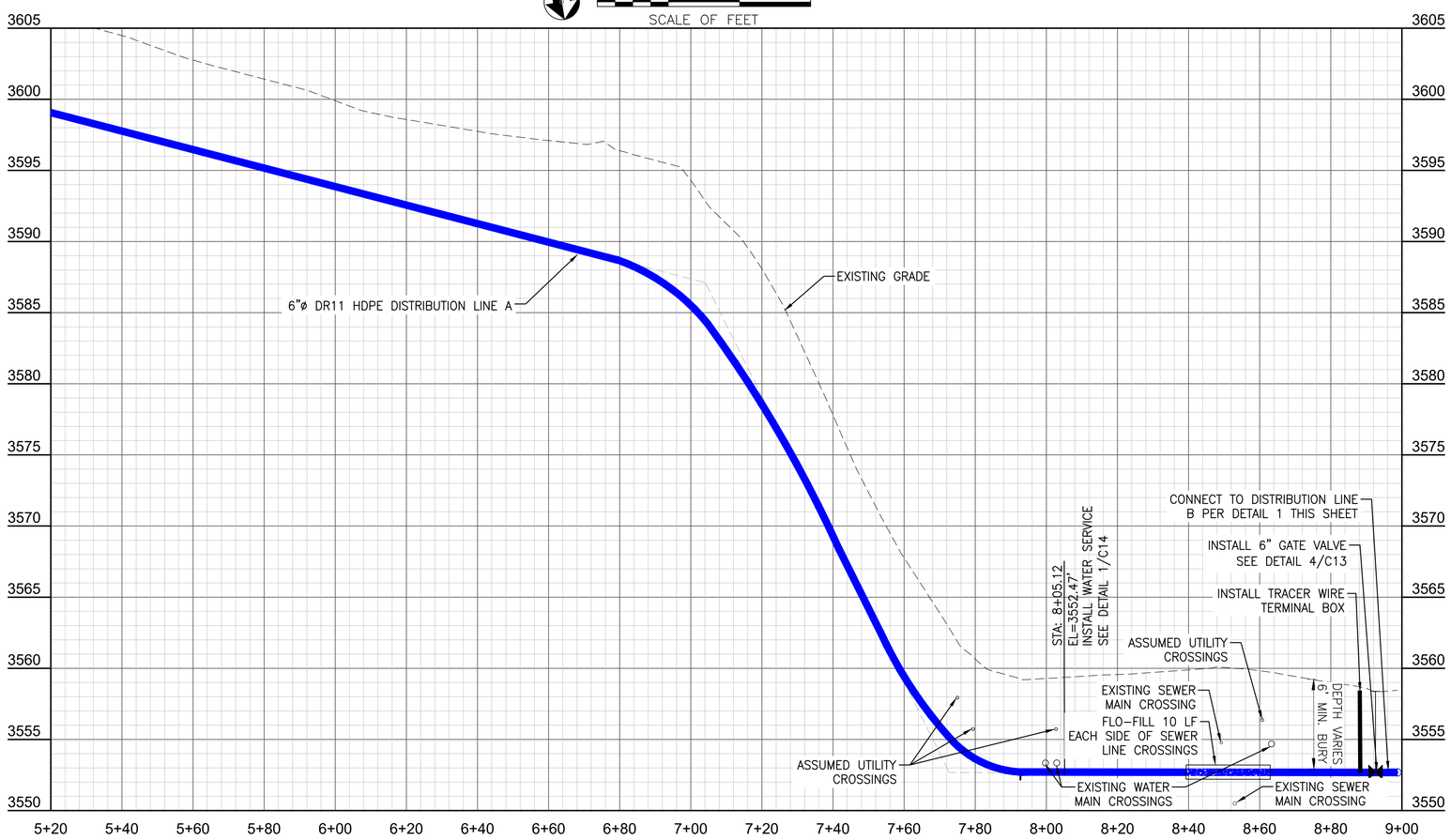

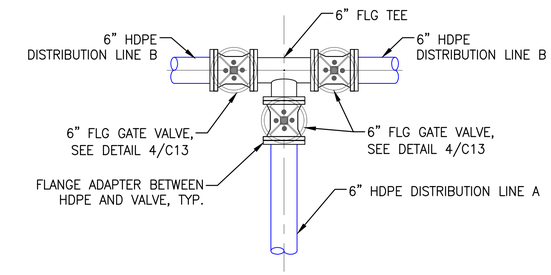

1 / C8 CONNECTION DETAIL
SCALE: N.T.S.

NOTES:
1. GRAVEL SURFACE SHALL BE REPAIRED PER PROJECT SPECIFICATIONS AND DETAILS.
2. ALL EXISTING WATER AND SEWER UTILITY LOCATIONS ARE APPROXIMATE AND NOTED FROM NPS GIS DATA AND AS–BUILT DRAWINGS.
3. ALL UTILITY CROSSINGS ARE APPROXIMATE AND NOTED FROM NPS GIS DATA AND AS–BUILT DRAWINGS AND SHOULD BE CONFIRMED IN THE FIELD.
4. LOCATIONS OF PROPOSED WATER SERVICE LOCATIONS MAY ALTER SLIGHTLY IN THE FIELD DEPENDING ON CONFLICTS, MAINTAIN 10' SEPARATION FROM SEWER SERVICES AS MUCH AS POSSIBLE. ALL TERMINATION LOCATIONS NEED TO BE REVIEWED PRIOR TO CONSTRUCTION.

CONTRACTOR NOTE:
CAUTION: UNDERGROUND UTILITY LOCATIONS ARE NOT GUARANTEED, NOR IS THERE ANY GUARANTEE THAT ALL EXISTING UTILITIES (WHETHER FUNCTIONAL OR ABANDONED) WITHIN THE PROJECT AREA ARE SHOWN ON THESE DRAWINGS. THE CONTRACTOR SHALL DETERMINE THE EXACT LOCATION OF ALL UNDERGROUND UTILITIES BEFORE STARTING WORK. THE CONTRACTOR SHALL BE RESPONSIBLE FOR ALL DAMAGE RESULTING FROM CONTRACTORS WORK.

PROFILE SCALE
20 0 20 40 (HORIZ)
SCALE OF FEET
5 0 5 10 (VERT)
SCALE OF FEET

Mark	REVISION	Date	Initial

DESIGNED: NELSON ENGINEERING
CADD NE
TECH. REVIEW:
DATE: 04/08/2026

SUB SHEET NO. C8

CONSTRUCTION DOCUMENTS

TITLE OF SHEET
WATER DISTRIBUTION A
P&P 5+20 – 9+00

GLACIER NATIONAL PARK
REHABILITATE POLEBRIDGE WATER SYSTEM

DRAWING NO. 117 / 197288
PMIS/PKG NO. 329234B
SHEET 16 OF 35

LAYOUT: WATER DISTRIBUTION A P&P 5+20 - 9+00(UD571 - PRINTER/PC3 DWG To PDF.pc3 - PAGE SETUP: 22x34 PDF BW - Publish - DWG VER: 2510 - PLOTTED BY: Abby King
DWG NAME: S:\Proj2025\048-01 (Rehabilitate Polebridge Water System - Civil\4 Drawings\GLAC\329234B\Civil\CX DESIGN.dwg - DATE/TIME: 10/24/2025 12:19:42 PM

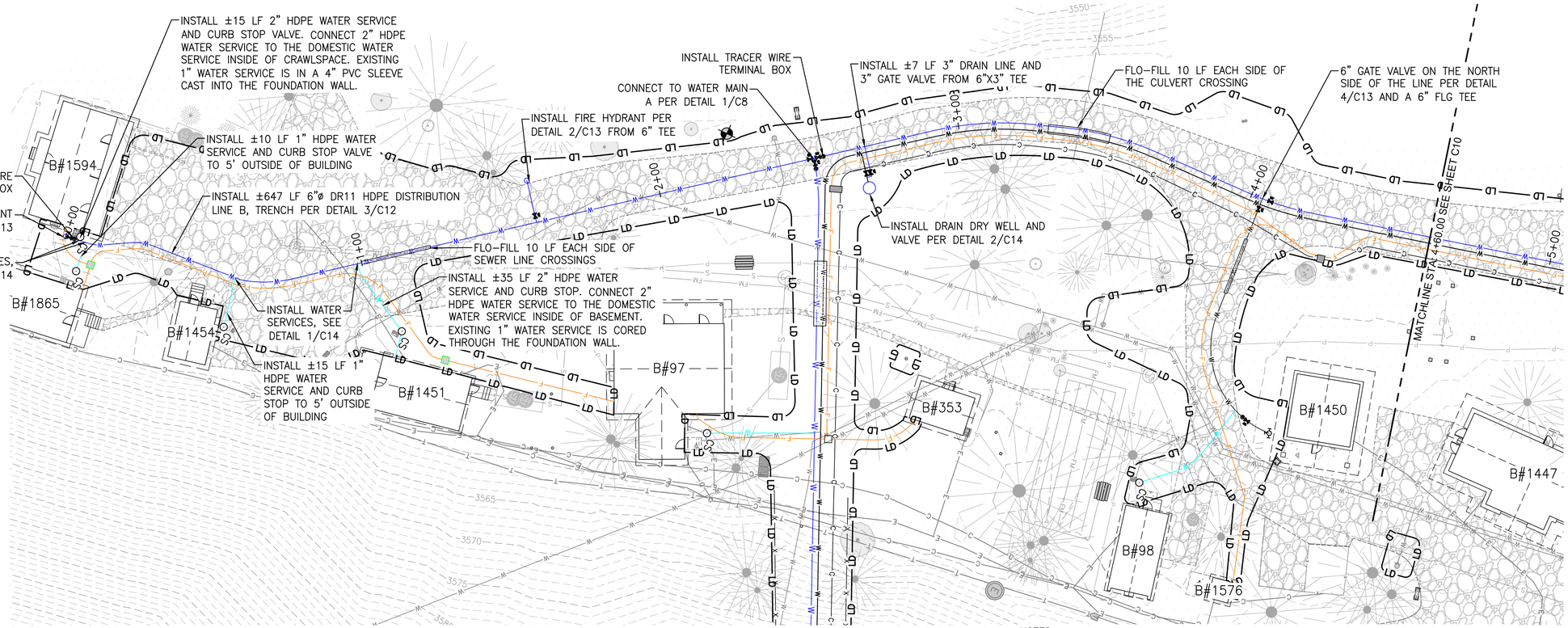

CONTRACTOR NOTE:
CAUTION: UNDERGROUND UTILITY LOCATIONS ARE NOT GUARANTEED, NOR IS THERE ANY GUARANTEE THAT ALL EXISTING UTILITIES (WHETHER FUNCTIONAL OR ABANDONED) WITHIN THE PROJECT AREA ARE SHOWN ON THESE DRAWINGS. THE CONTRACTOR SHALL DETERMINE THE EXACT LOCATION OF ALL UNDERGROUND UTILITIES BEFORE STARTING WORK. THE CONTRACTOR SHALL BE RESPONSIBLE FOR ALL DAMAGE RESULTING FROM CONTRACTORS WORK.

20 0 20 40
SCALE OF FEET

NOTES:
1. GRAVEL SURFACE SHALL BE REPAIRED PER PROJECT SPECIFICATIONS AND DETAILS.
2. ALL EXISTING WATER AND SEWER UTILITY LOCATIONS ARE APPROXIMATE AND NOTED FROM NPS GIS DATA AND AS-BUILT DRAWINGS.
3. ALL UTILITY CROSSINGS ARE APPROXIMATE AND NOTED FROM NPS GIS DATA AND AS-BUILT DRAWINGS AND SHOULD BE CONFIRMED IN THE FIELD.
4. LOCATIONS OF PROPOSED WATER SERVICE LOCATIONS MAY ALTER SLIGHTLY IN THE FIELD DEPENDING ON CONFLICTS, MAINTAIN 10' SEPARATION FROM SEWER SERVICES AS MUCH AS POSSIBLE. ALL TERMINATION LOCATIONS NEED TO BE REVIEWED PRIOR TO CONSTRUCTION.

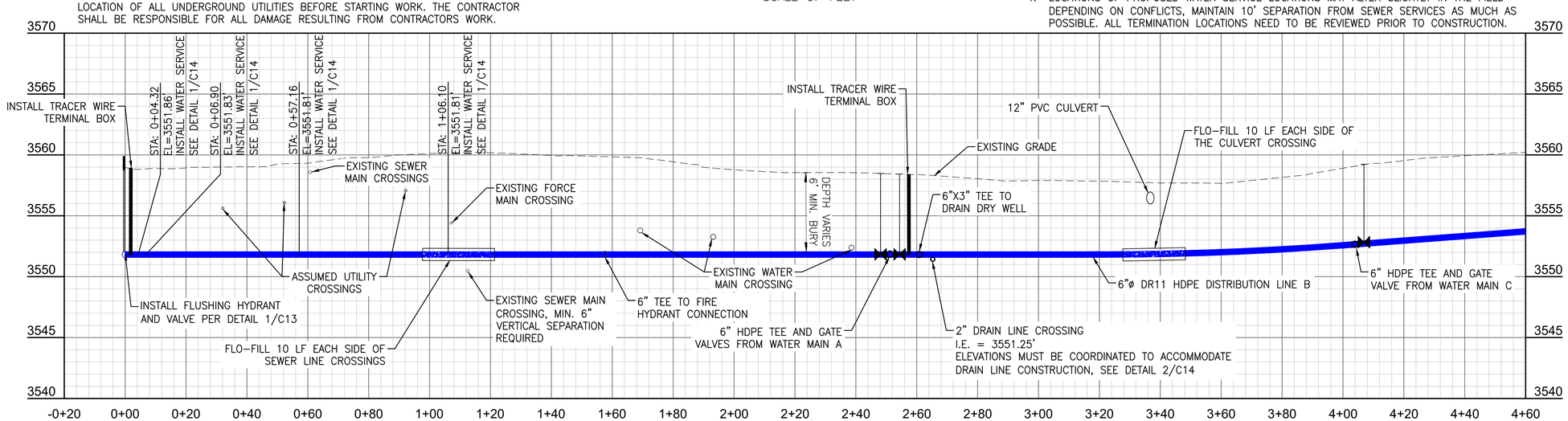

PROFILE SCALE
20 0 20 40 (HORIZ)
SCALE OF FEET
5 0 5 10 (VERT)
SCALE OF FEET

Mark	REVISION	Date	Initial

DESIGNED: NELSON ENGINEERING
CADD NE
TECH. REVIEW:
DATE: 04/08/2026

SUB SHEET NO. C9

CONSTRUCTION DOCUMENTS

TITLE OF SHEET
WATER DISTRIBUTION B
P&P 0+00 – 4+60

GLACIER NATIONAL PARK
REHABILITATE POLEBRIDGE WATER SYSTEM

DRAWING NO. 117
197288
PMIS/PKG NO. 329234B
SHEET 17 OF 35

LAYOUT: WATER DISTRIBUTION B P&P 0+00 - 4+60MI8868 - PRINTER/PC3 DWG To PDF.pc3 - PAGE SETUP: 22x34 PDF BW - Publish - DWG VER: 25.0 - PLOTTED BY: Abby King
DWG NAME: S:\Proj2025\048-01 (Rehabilitate Polebridge Water System - Civil)\4 Drawings\GLACY329234B\Civil\C9 DESIGN.dwg - DATE/TIME: 10/24/2025 12:19:42 PM

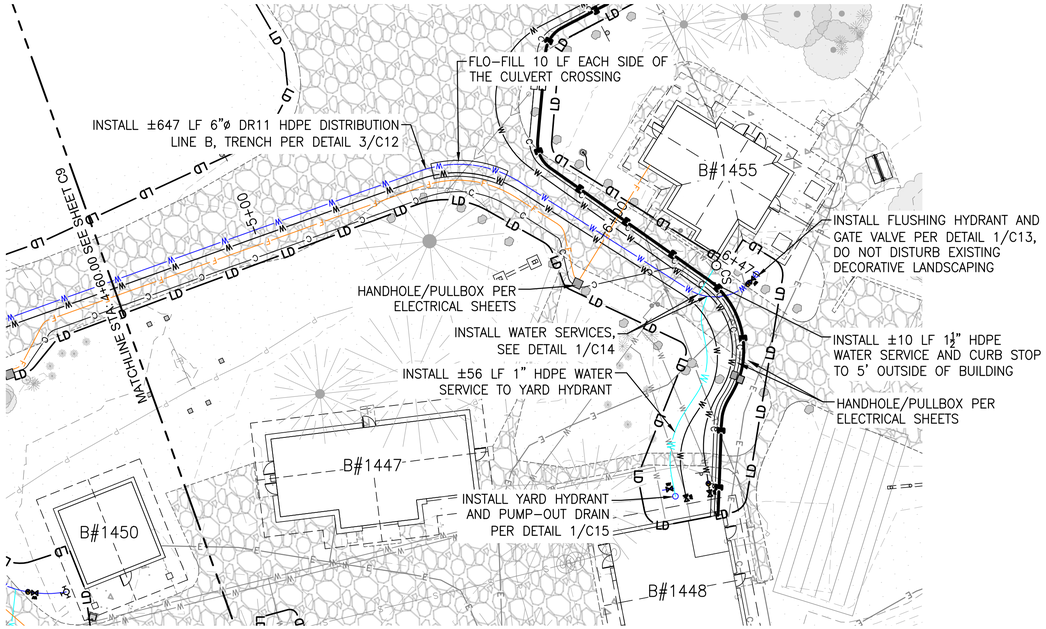

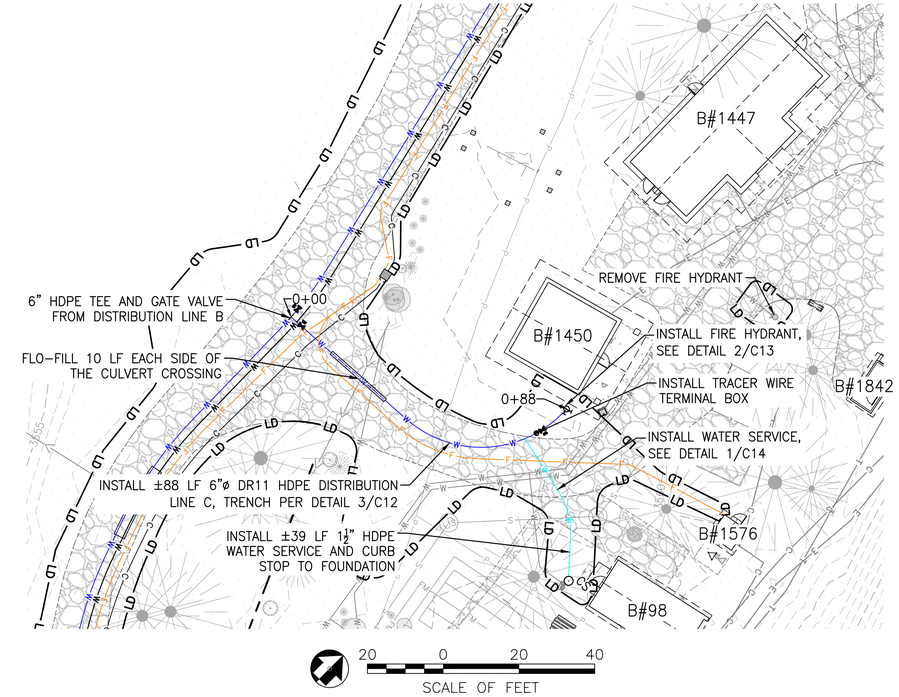

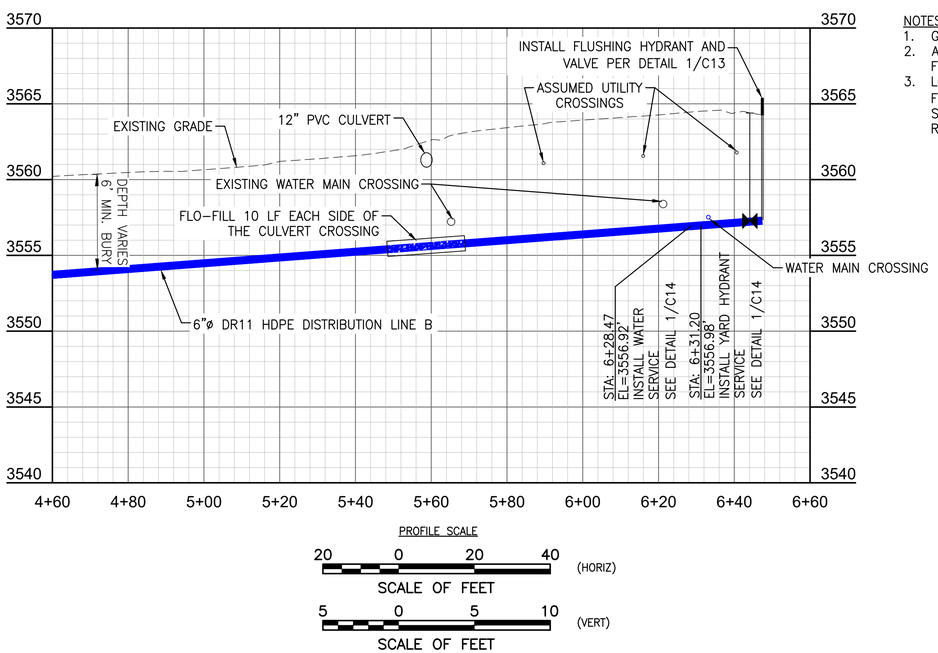

NOTES:
1. GRAVEL SURFACE SHALL BE REPAIRED PER PROJECT SPECIFICATIONS AND DETAILS.
2. ALL EXISTING WATER AND SEWER UTILITY LOCATIONS ARE APPROXIMATE AND NOTED FROM NPS GIS DATA AND AS-BUILT DRAWINGS.
3. LOCATIONS OF PROPOSED WATER SERVICE LOCATIONS MAY ALTER SLIGHTLY IN THE FIELD DEPENDING ON CONFLICTS, MAINTAIN 10' SEPARATION FROM SEWER SERVICES AS MUCH AS POSSIBLE. ALL TERMINATION LOCATIONS NEED TO BE REVIEWED PRIOR TO CONSTRUCTION.

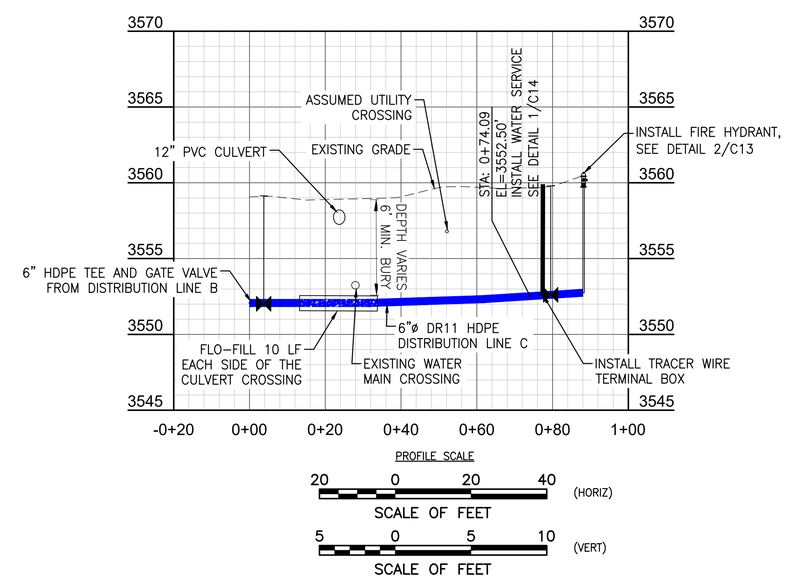

CONTRACTOR NOTE:
CAUTION: UNDERGROUND UTILITY LOCATIONS ARE NOT GUARANTEED, NOR IS THERE ANY GUARANTEE THAT ALL EXISTING UTILITIES (WHETHER FUNCTIONAL OR ABANDONED) WITHIN THE PROJECT AREA ARE SHOWN ON THESE DRAWINGS. THE CONTRACTOR SHALL DETERMINE THE EXACT LOCATION OF ALL UNDERGROUND UTILITIES BEFORE STARTING WORK. THE CONTRACTOR SHALL BE RESPONSIBLE FOR ALL DAMAGE RESULTING FROM CONTRACTORS WORK.

Mark	REVISION	Date	Initial

DESIGNED: NELSON ENGINEERING
CADD: NE
TECH. REVIEW:
DATE: 04/08/2026

SUB SHEET NO. C10

CONSTRUCTION DOCUMENTS

TITLE OF SHEET
WATER DISTRIBUTION B
P&P 4+60 – 6+60
WATER DISTRIBUTION C
GLACIER NATIONAL PARK
REHABILITATE POLEBRIDGE WATER SYSTEM

DRAWING NO. 117 / 197288
PMIS/PKG NO. 329234B
SHEET 18 OF 35

LAYOUT: WATER DISTRIBUTION B & C4106FA - PRINTER/PC3: DWG To PDF.pc3 - PAGE SETUP: 22x34 PDF BW - Publish - DWG VER: 2510 - PLOTTED BY: Abby King
DWG NAME: S:\Proj\B025\048-01 (Rehabilitate Polebridge Water System - Civil\4 Drawings\CLAC\329234B\Civil\C4 DESIGN.dwg - DATE/TIME: 10/24/2025 12:19:42 PM

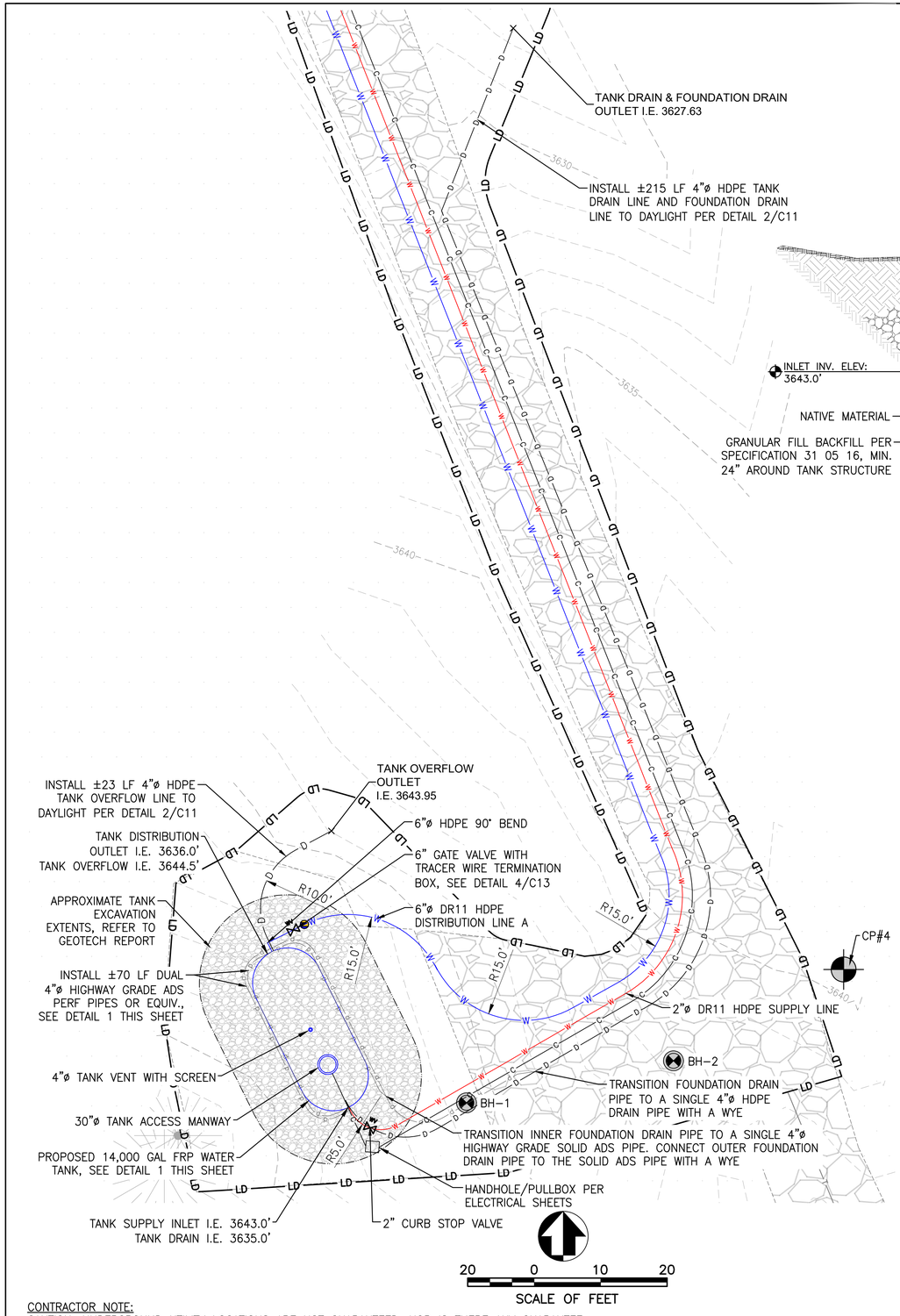

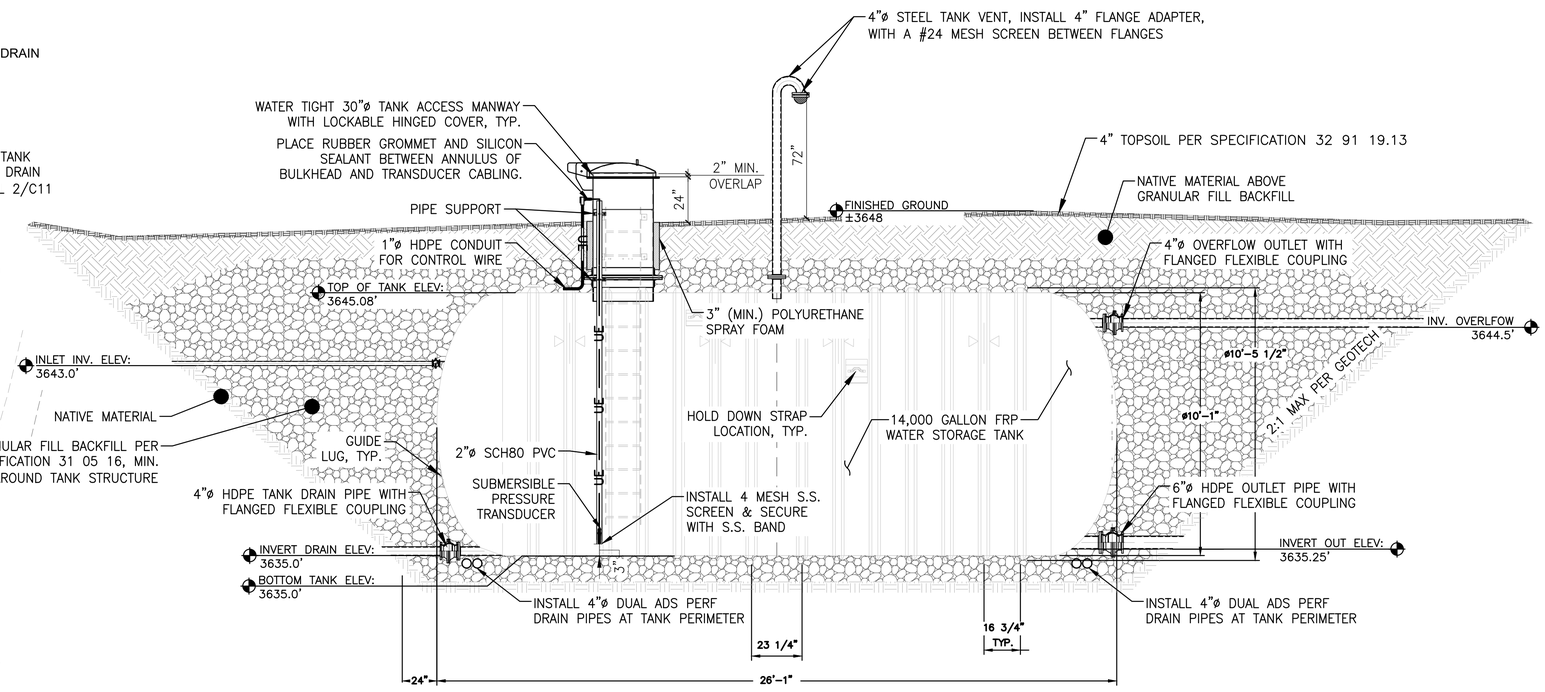

1 / C11 **14,000 FRP WATER TANK DETAIL**
SCALE: NTS

LEGEND

—— D —— D —— D ——	TANK OVERFLOW AND DRAIN LINES
—— W —— W ——	WATER SUPPLY TO STORAGE TANK
—— W —— W ——	WATER DISTRIBUTION MAIN
—— d —— d —— d ——	TANK FOUNDATION DRAINS

NOTES:
1. REFER TO GEOTECHNICAL REPORT FOR BORING LOGS RELATED TO BH-1 AND BH-2 AND ALL GEOTECHNICAL RECOMMENDATIONS.
2. COORDINATE STAGING AND STOCKPILE LOCATIONS WITHIN LOD PER NPS.

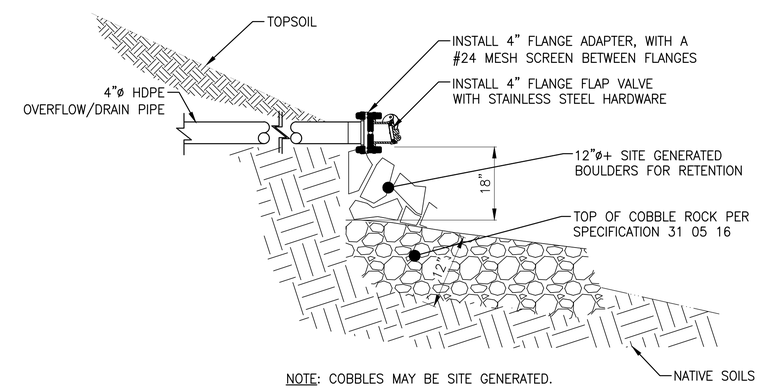

NOTE: COBBLES MAY BE SITE GENERATED.

2 / C11 **DRAIN/OVERFLOW OUTFALL**
SCALE: NTS

CONTRACTOR NOTE:
CAUTION: UNDERGROUND UTILITY LOCATIONS ARE NOT GUARANTEED, NOR IS THERE ANY GUARANTEE THAT ALL EXISTING UTILITIES (WHETHER FUNCTIONAL OR ABANDONED) WITHIN THE PROJECT AREA ARE SHOWN ON THESE DRAWINGS. THE CONTRACTOR SHALL DETERMINE THE EXACT LOCATION OF ALL UNDERGROUND UTILITIES BEFORE STARTING WORK. THE CONTRACTOR SHALL BE RESPONSIBLE FOR ALL DAMAGE RESULTING FROM CONTRACTORS WORK.

Mark	REVISION	Date	Initial

DESIGNED: NELSON ENGINEERING
CADD NE
TECH. REVIEW:
DATE: 04/08/2026

SUB SHEET NO. C11

CONSTRUCTION DOCUMENTS

TITLE OF SHEET
WATER TANK SITE PLAN

GLACIER NATIONAL PARK
REHABILITATE POLEBRIDGE WATER SYSTEM

DRAWING NO. 117
197288
PMIS/PKG NO. 329234B
SHEET 19 OF 35

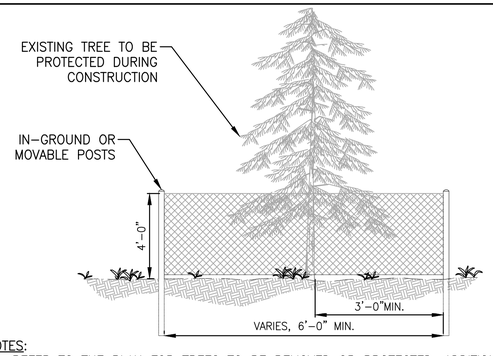

NOTES:
1. REFER TO THE PLAN FOR TREES TO BE REMOVED OR PROTECTED. ADDITIONAL TREES MAY NEED TO BE PROTECTED AT THE DIRECTION OF THE CO.
2. THE OUTSIDE EDGE OF THE TEMPORARY BARRIER SHALL BE 6'-0" IN WIDTH OR AT LEAST AT THE OUTER DRIP LINE OF THE TREE, WHICHEVER IS GREATER. TEMPORARY BARRIERS MAY BE PLACED AROUND AN INDIVIDUAL TREE OF GROUPS OF TREES.
3. MOVABLE BARRIERS MAY BE SUBSTITUTED FOR IN-GROUND BARRIERS. IT IS THE CONTRACTOR'S RESPONSIBILITY TO ENSURE THAT PERIMETER OF FENCING REMAINS AT THE DRIP-LINE OF THE TREE AND THAT TREES ARE PROTECTED.

1/C12 TREE PROTECTION DETAIL
SCALE: N.T.S.

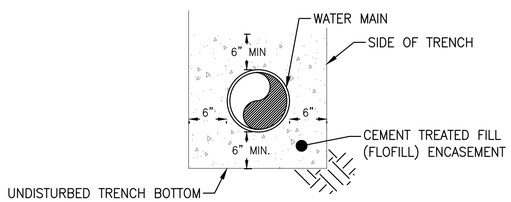

NOTE: EXTEND ENCASEMENT IN WATER TRENCH 10' EACH SIDE OF CROSSING

2/C12 FLO-FILL ENCASEMENT DETAIL
N.T.S.

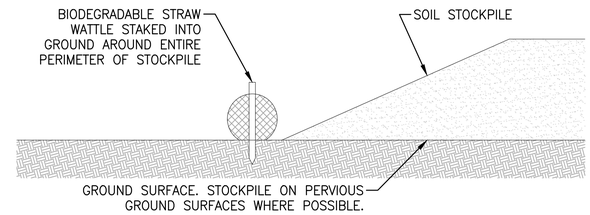

4/C12 STOCKPILE DETAIL
SCALE: N.T.S.

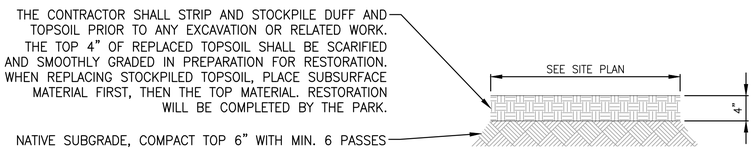

NOTE: IMPORTED TOPSOIL FROM AN NPS APPROVED SOURCE MAY BE REQUIRED TO SUPPLEMENT WHAT MATERIAL IS STRIPPED, STOCKPILED, AND REPLACED IF THAT AMOUNT DOES NOT COVER THE DISTURBANCE AREA WITH 4" THROUGHOUT. MIX IMPORTED AND STOCKPILED TOPSOIL BEFORE PLACEMENT.

5/C12 VEGETATED AREA PATCH DETAIL
SCALE: N.T.S.

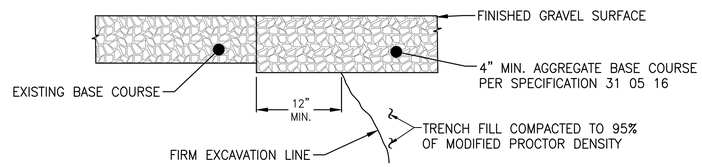

NOTE: GRADE GRAVEL TO MATCH EXISTING PROFILE, DRAINAGE PATTERNS

6/C12 GRAVEL SURFACE REPLACEMENT
SCALE N.T.S.

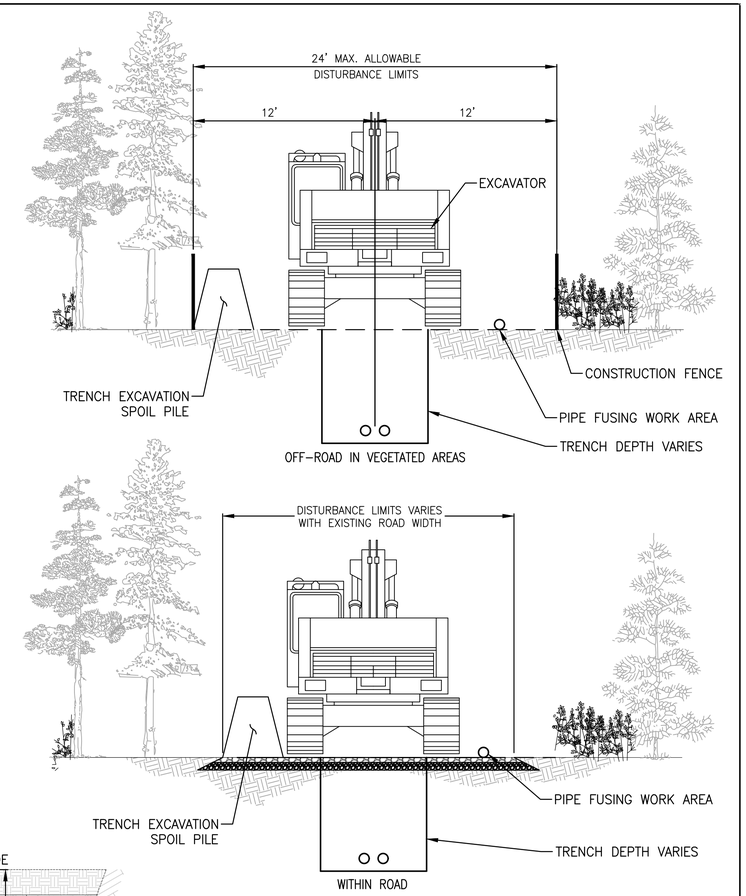

7/C12 TRENCH EXCAVATION LIMITS
SCALE: N.T.S.

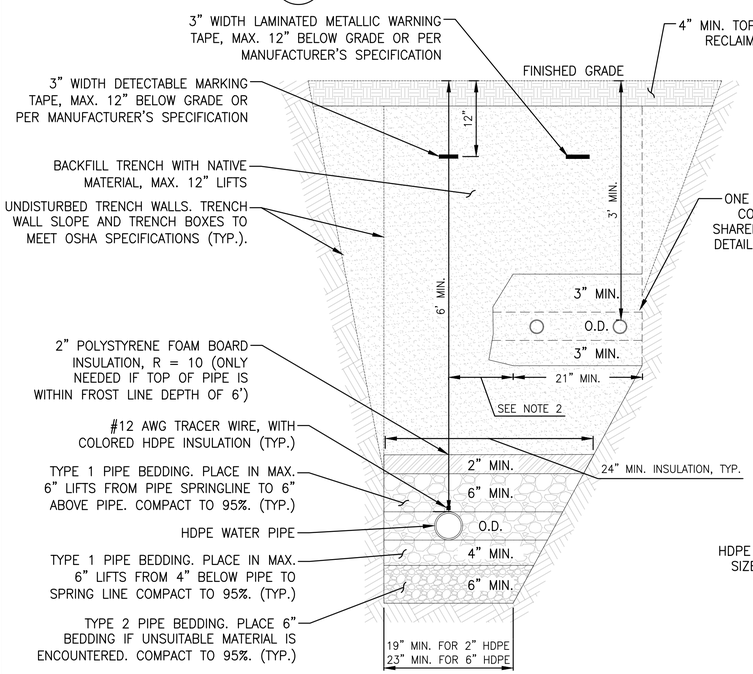

NOTES:
1. THE MIN. TRENCH WIDTH AT THE TOP OF THE PIPE SHALL BE THE GREATER OF (PIPE O.D. + 16") OR (PIPE O.D. x 1.25 + 12") PER ASTM D2321.
2. SEPARATE WATER MAINS AND CONDUIT HORIZONTALLY BY 12" MIN.

3/C12 TYPICAL WATER TRENCH DETAIL - 1, 2, & 3 PIPE
SCALE: N.T.S.

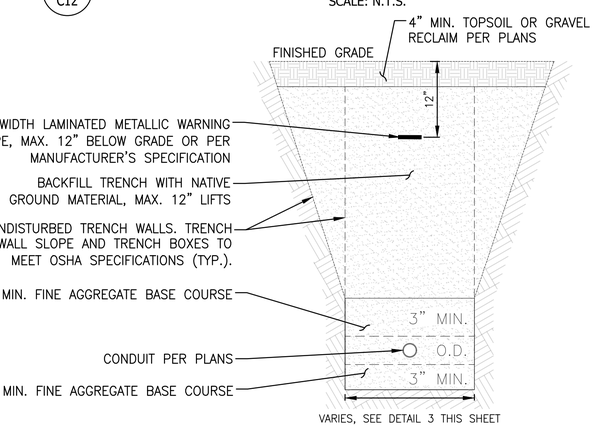

8/C12 FIBER OPTIC OR ELECTRICAL CONDUIT TRENCH DETAIL
SCALE: N.T.S.

Mark	REVISION	Date	Initial

DESIGNED: NELSON ENGINEERING
CADD: NE
TECH. REVIEW:
DATE: 04/08/2026

SUB SHEET NO. C12

CONSTRUCTION DOCUMENTS

TITLE OF SHEET: DETAILS

GLACIER NATIONAL PARK
REHABILITATE POLEBRIDGE WATER SYSTEM

DRAWING NO. 117
197288
PMIS/PKG NO. 329234B
SHEET 20 OF 35

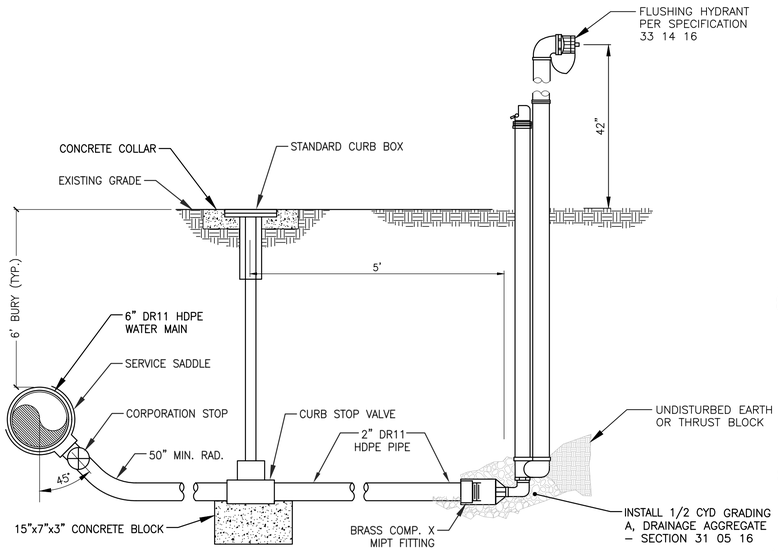

NOTES: COMPLY WITH PRODUCT REQUIREMENTS SPECIFIED IN SECTION 33 14 16 – WATER DISTRIBUTION

1/C13 FLUSHING HYDRANT ASSEMBLY DETAIL

SCALE: N.T.S.

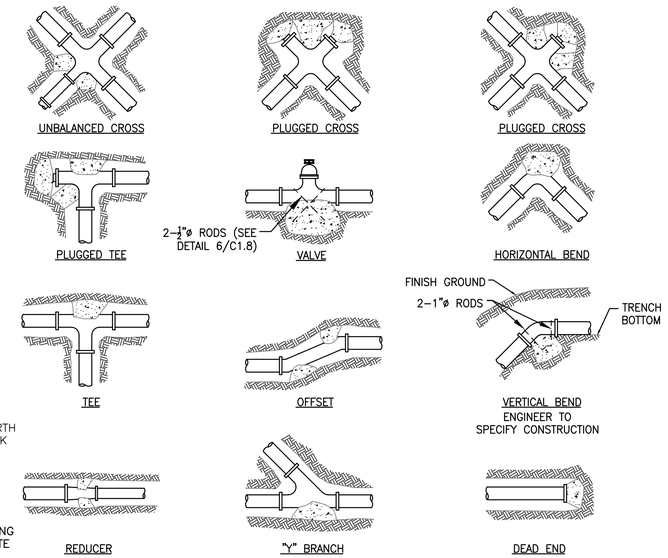

NOTES:
1. SIZE OF BLOCK SHALL BE A MINIMUM OF 6" THICK. COMPLY WITH DIMENSIONS PRESENTED IN DETAIL 4/C11.
2. ALL BLOCKING SHALL BEAR AGAINST UNDISTURBED MATERIAL.
3. FITTINGS TO BE SEPARATED FROM THRUST BLOCK WITH AN APPROVED BOND BREAKER.

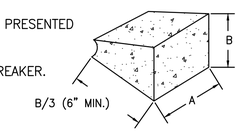

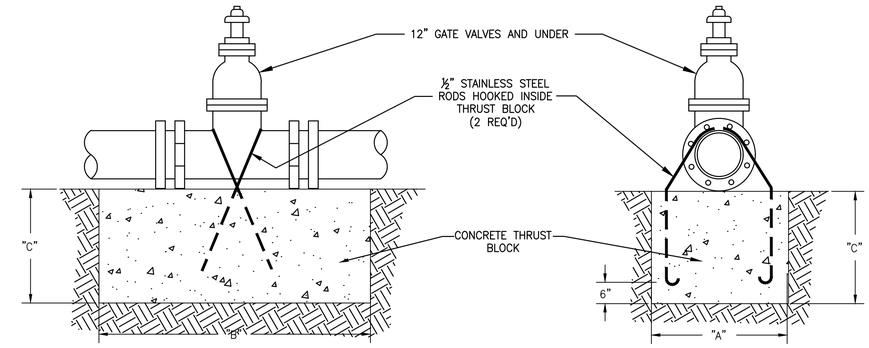

MINIMUM DIMENSIONS FOR THRUST BLOCKING – VALVES				
VALVE SIZE		6" & 8"	10"	12"
150 PSI	"A"	2'–0"	2'–6"	3'–0"
	"B"	2'–0"	2'–6"	3'–0"
	"C"	2'–0"	2'–0"	3'–0"

NOTES:
1. PRESSURES SHOWN ABOVE ARE MAXIMUM WORKING PRESSURE IN THE SYSTEM (150 PSI FOR THIS PROJECT).
2. VALVES SHALL BE POLY WRAPPED PRIOR TO THE INSTALLATION OF THE THRUST
3. BLOCK AND ANCHOR BOLTS.
4. FITTINGS TO BE SEPARATED FROM BLOCKS WITH AN APPROVED BOND BREAKER, SUCH AS POLY WRAP.
5. ALL BLOCKS TO BEAR AGAINST UNDISTURBED MATERIAL.
6. DESIGN IS BASED ON 150 PSI MAIN PRESSURE AND 2000 PSF SOIL BEARING CAPACITY.

MINIMUM DIMENSIONS FOR THRUST BLOCKING										
FITTING SIZE	TEES & PLUGS		90° BENDS		45° BENDS & WYES		REDUCERS & 22 1/2° BENDS		11 1/4° BENDS	
	A	B	A	B	A	B	A	B	A	B
4"	1'–7"	1'–2"	1'–9"	1'–6"	1'–8"	0'–10"	1'–7"	0'–6"	0'–6"	0'–6"
6"	2'–0"	1'–11"	2'–5"	2'–2"	1'–10"	1'–7"	1'–9"	0'–10"	1'–0"	0'–6"
8"	2'–8"	2'–6"	3'–2"	3'–0"	2'–5"	2'–1"	1'–9"	1'–6"	1'–0"	1'–0"
10"	3'–4"	3'–3"	4'–0"	3'–10"	3'–0"	2'–9"	2'–2"	1'–11"	1'–6"	1'–0"
12"	4'–0"	3'–10"	4'–8"	4'–8"	3'–8"	3'–3"	2'–7"	2'–3"	2'–0"	1'–0"
14"	5'–5"	3'–10"	6'–6"	4'–11"	4'–9"	3'–5"	3'–5"	2'–5"	2'–0"	1'–6"
20"	5'–0"	5'–0"	6'–0"	6'–0"	5'–0"	4'–0"	3'–6"	3'–0"	3'–0"	2'–0"
24"	6'–0"	6'–0"	7'–0"	7'–0"	5'–0"	5'–0"	4'–6"	3'–0"	3'–0"	3'–0"
30"	7'–6"	7'–6"	8'–0"	8'–0"	6'–3"	6'–3"	4'–9"	4'–6"	3'–3"	3'–3"

3/C13 TYPICAL THRUST BLOCK DIMENSIONS

SCALE: N.T.S.

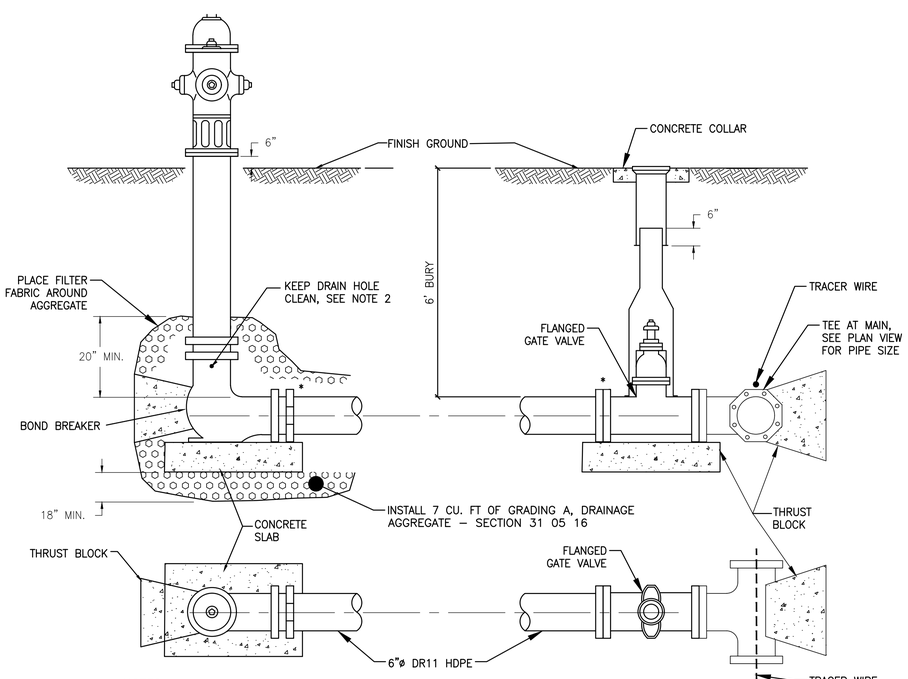

NOTES:
1. COMPLY WITH REQUIREMENTS SPECIFIED IN SECTION 33 14 16 – WATER DISTRIBUTION
2. DRAIN HOLES ARE NOT PERMITTED IF BELOW WATER TABLE.

2/C13 FIRE HYDRANT ASSEMBLY

SCALE: N.T.S.

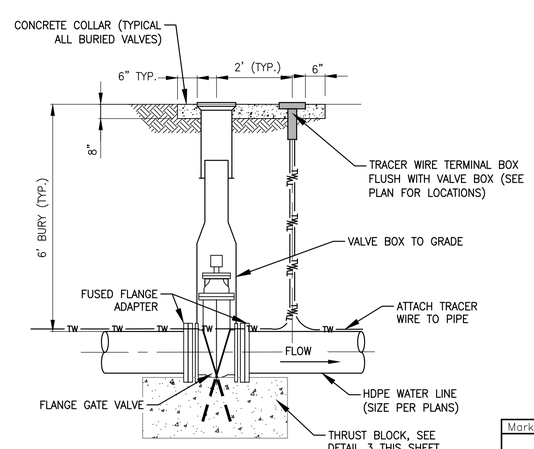

NOTE: COMPLY WITH REQUIREMENTS SPECIFIED IN SECTION 33 14 16 – WATER DISTRIBUTION.

4/C13 BURIED GATE VALVE DETAIL

SCALE: N.T.S.

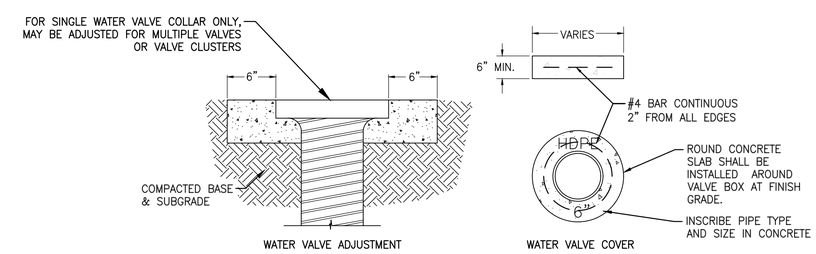

NOTES:
1. COMPLY WITH REQUIREMENTS SPECIFIED IN SECTION 33 14 16 – WATER DISTRIBUTION
2. ADJUST WATER VALVES UPWARD OR DOWNWARD AS REQUIRED. FINAL ADJUSTMENT SHALL BE MADE AFTER FINAL GRADING.

5/C13 WATER VALVE ADJUSTMENT DETAIL

SCALE: N.T.S.

Mark	REVISION	Date	Initial

DESIGNED: NELSON ENGINEERING
CADD: NE
TECH. REVIEW:
DATE: 04/08/2026

SUB SHEET NO. C13

CONSTRUCTION DOCUMENTS

TITLE OF SHEET: DETAILS

GLACIER NATIONAL PARK
REHABILITATE POLEBRIDGE WATER SYSTEM

DRAWING NO. 117
197288
PMIS/PKG NO. 329234B
SHEET 21 OF 35

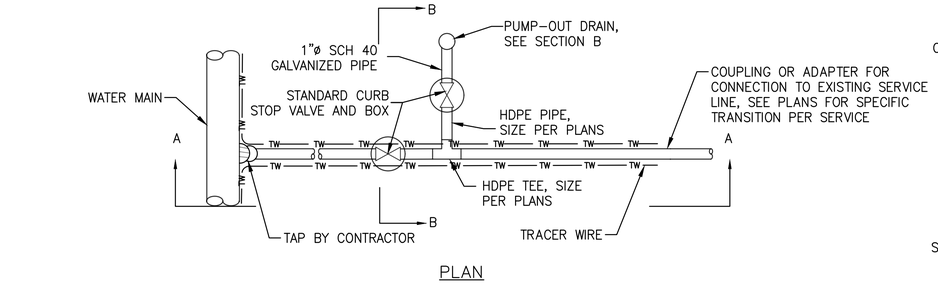

PLAN

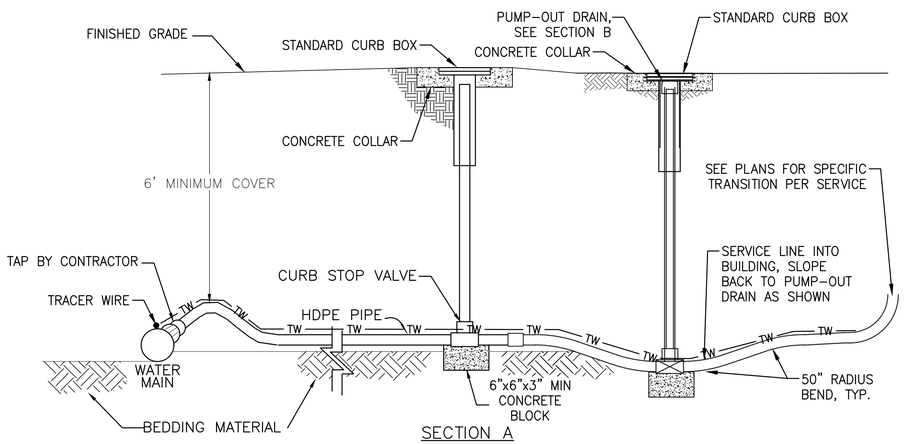

SECTION A

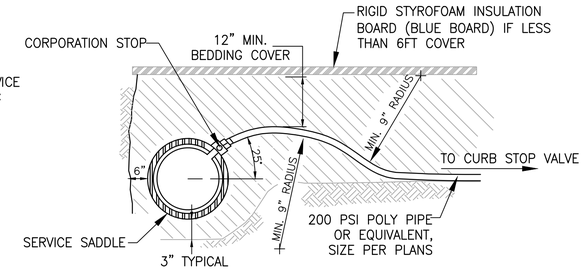

NOTES:
1. ALL CONNECTIONS TO POLY PIPE WILL BE COMPRESSION TYPE FITTINGS INSTATIGHT OR EQUIVALENT.
2. SIZE WATER SERVICES PER PLANS.

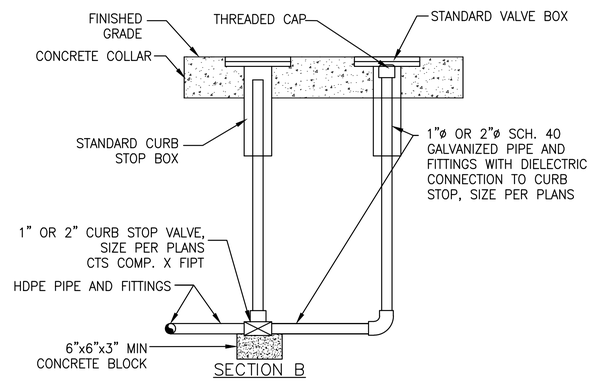

SECTION B

1 / C14 TYPICAL WATER SERVICE DETAIL

SCALE: N.T.S.

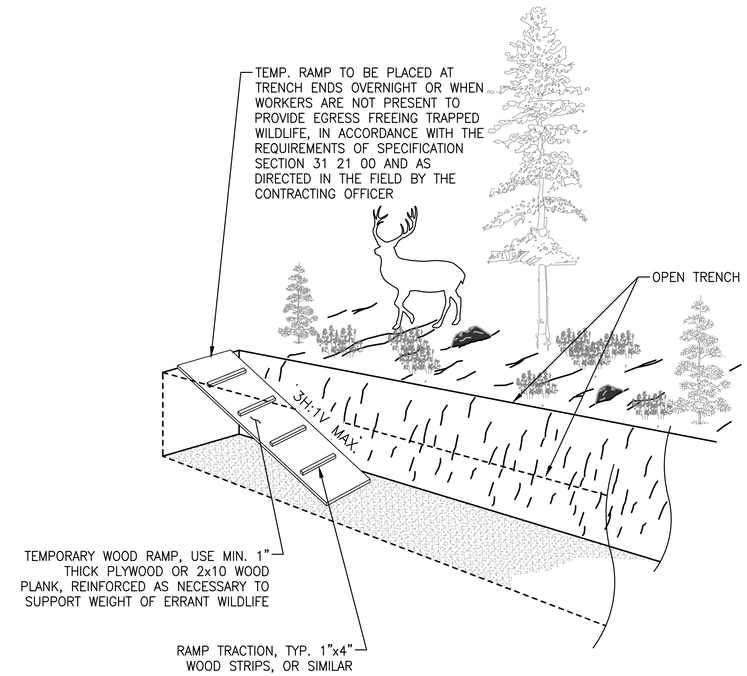

3 / C14 WILDLIFE ESCAPE RAMP IN TRENCHES AND OPEN EXCAVATIONS

SCALE: N.T.S.

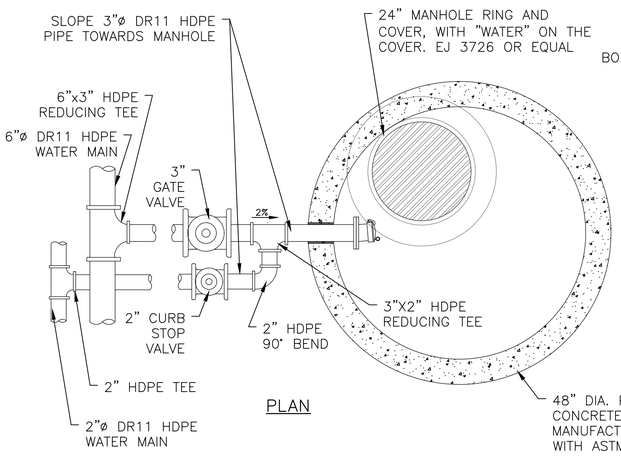

PLAN

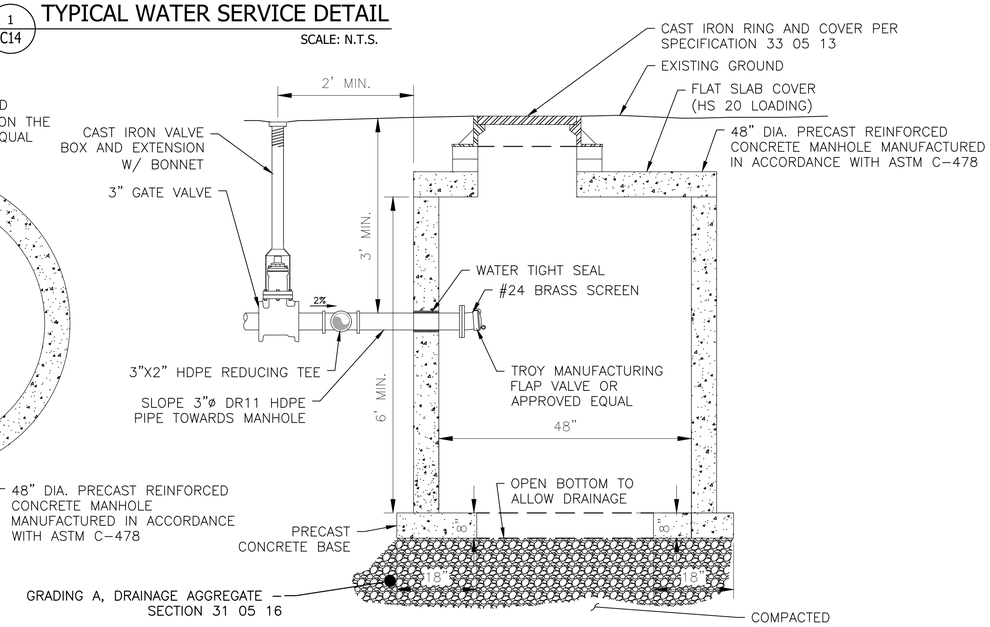

ELEVATION

NOTES:
1. ALL PIPING, VALVES, FITTINGS AND APPURTENANCES SHALL BE RATED FOR MINIMUM 200 PSI WORKING PRESSURE.
2. RESTRAIN ALL FITTINGS AND PIPE JOINTS.
3. DRAIN INLET PIPE SIZE VARIES – BASED ON MAIN LINE PIPE SIZE AND CALL OUT AT STATION.
4. ALL JOINTS BETWEEN MANHOLE SECTIONS, AND MANHOLE RING AND TOP SECTION JOINTING MATERIAL SHALL BE "RAM-NEK" OR EQUAL.

2 / C14 LOW POINT DRYWELL DETAIL

SCALE: N.T.S.

Mark	REVISION	Date	Initial

DESIGNED: NELSON ENGINEERING
CADD NE
TECH. REVIEW:
DATE: 04/08/2026

SUB SHEET NO. C14

CONSTRUCTION DOCUMENTS

TITLE OF SHEET
DETAILS

GLACIER NATIONAL PARK
REHABILITATE POLEBRIDGE WATER SYSTEM

DRAWING NO. 117
197288
PMIS/PKG NO. 329234B
SHEET 22 OF 35

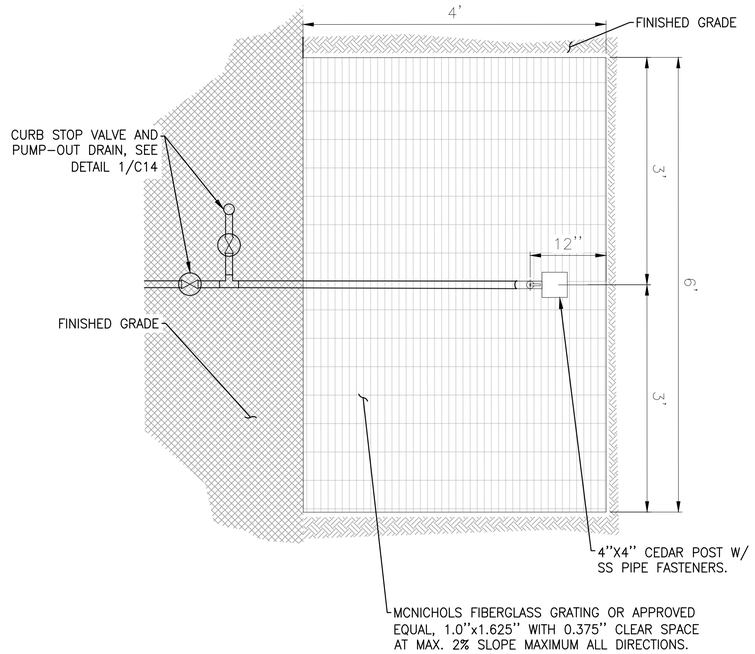

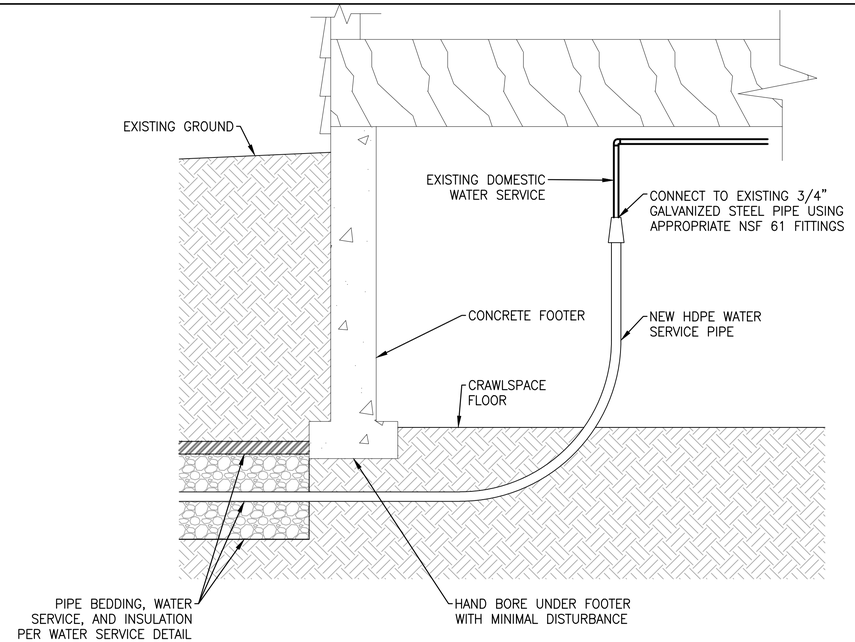

NOTES:
1. COORDINATE WATER SERVICE CONNECTIONS AT LEAST 72 HOURS IN ADVANCE WITH NPS. A MAXIMUM 6 HOUR WATER SERVICE SHUTDOWN PERIOD SHALL BE ALLOWED. THE CONTRACTOR SHALL FLUSH THE DOMESTIC WATER SERVICE AND RELEASE AIR ONCE THE CONNECTION IS COMPLETED.
2. ALL CONNECTIONS SHALL BE DISINFECTED PER AWWA C651-14 - DISINFECTION PROCEDURES, LATEST EDITION.

2 C15 #97 RANGER RESIDENCE WATER SERVICE CONNECTION

SCALE: N.T.S.

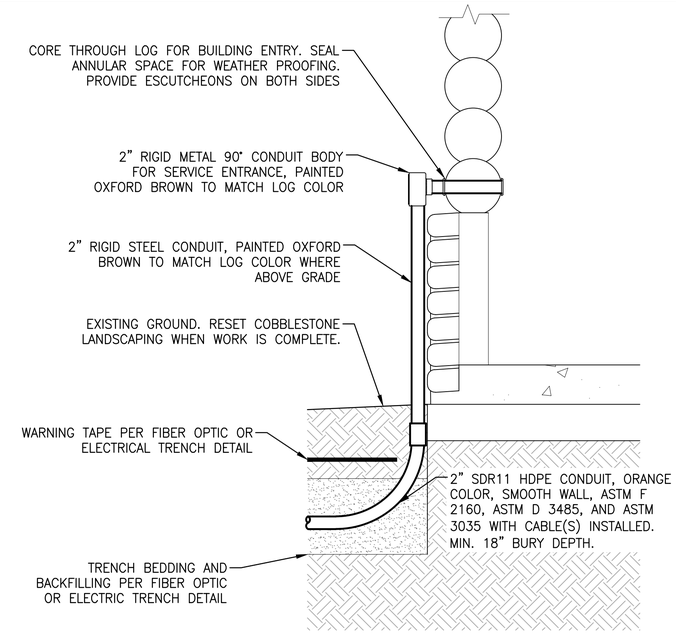

4 C15 #1455 RANGER STATION FIBER OPTIC CONNECTION
#1448 ELECTRIC/COMMS CONNECTION

SCALE: N.T.S.

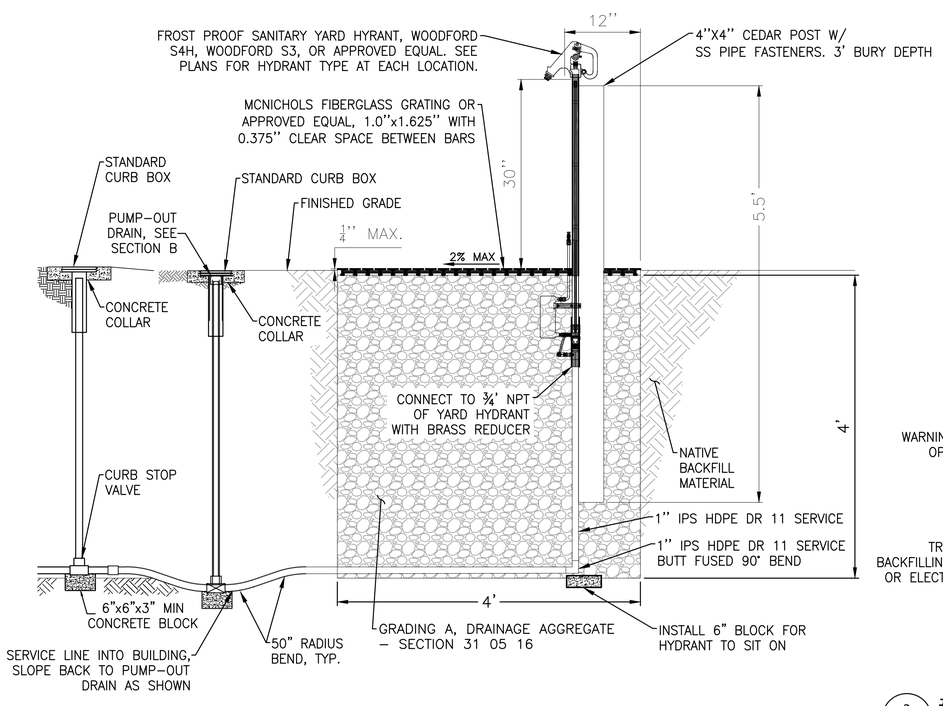

NOTES:
1. CONTRACTOR SHALL SUPPLY ALL NECESSARY FITTINGS FOR HDPE TO NPT CONNECTIONS.
2. 1/4" MAXIMUM DIFFERENCE IN ELEVATION BETWEEN ABA GRATING AND ADJACENT SURFACE.
3. HOSE BIB SHALL ACCOMMODATE STANDARD 3/4" GARDEN HOSE.
4. ALL FITTINGS SHALL BE 'NO LEAD' BRASS MEETING UNS C89833 AS PER ASTM B584.

1 C15 ACCESSIBLE YARD HYDRANT

SCALE: N.T.S.

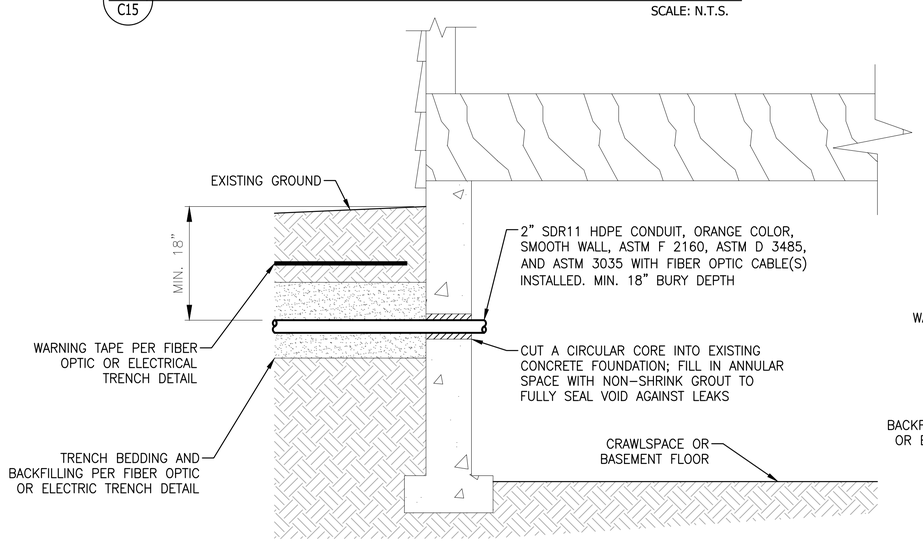

NOTE: COORDINATE FIBER OPTIC SERVICE CONNECTIONS AT LEAST 72 HOURS IN ADVANCE WITH NPS. NPS PERSONNEL SHALL SUPERVISE WORK INSIDE OF NPS BUILDINGS.

3 C15 #97 RANGER RESIDENCE & #1451 STRISSEL CABIN FIBER OPTIC CONNECTION

SCALE: N.T.S.

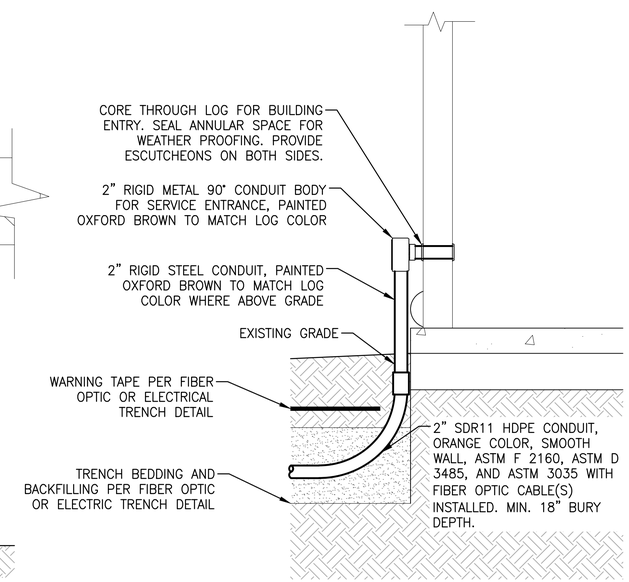

5 C15 #353 RANGER OFFICE & #1576 RADIO SHED FIBER OPTIC CONNECTION

SCALE: N.T.S.

Mark	REVISION	Date	Initial

DESIGNED: NELSON ENGINEERING
CADD NE
TECH. REVIEW:
DATE: 04/08/2026

SUB SHEET NO. C15

CONSTRUCTION DOCUMENTS

TITLE OF SHEET
DETAILS

GLACIER NATIONAL PARK
REHABILITATE POLEBRIDGE WATER SYSTEM

DRAWING NO. 117 197288
PMIS/PKG NO. 329234B
SHEET 23 OF 35

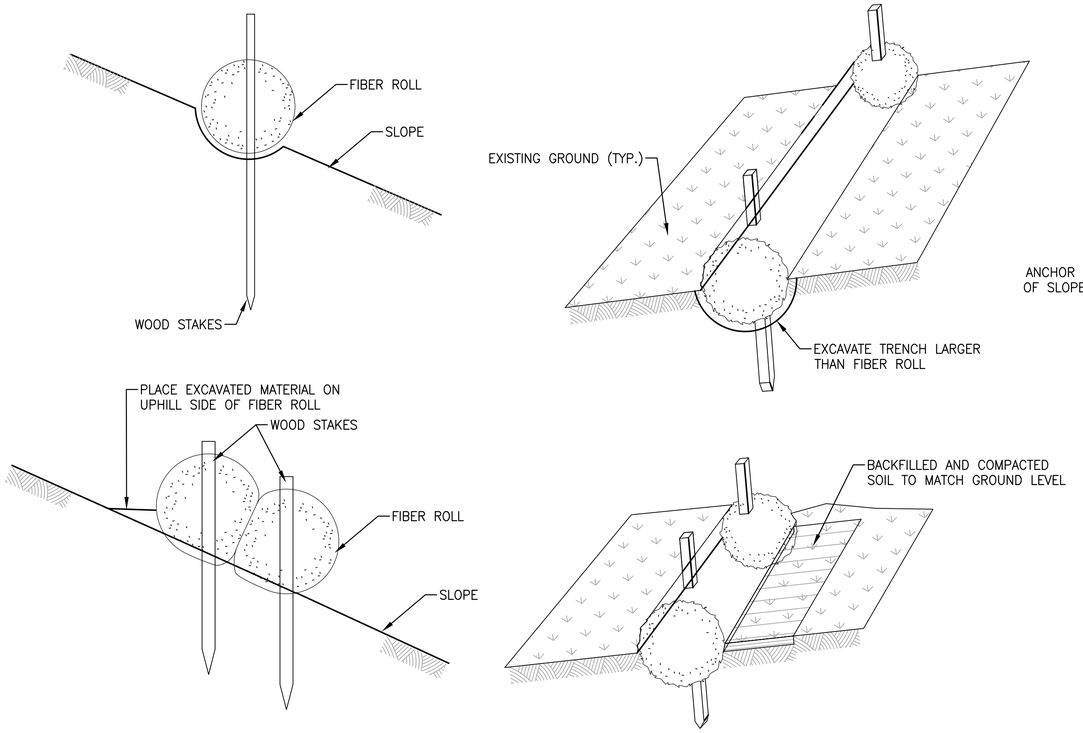

NOTE: DO NOT CRUSH FIBER ROLLS WHILE STAKING.

1 / C16 FIBER ROLL DETAILS

SCALE: N.T.S.

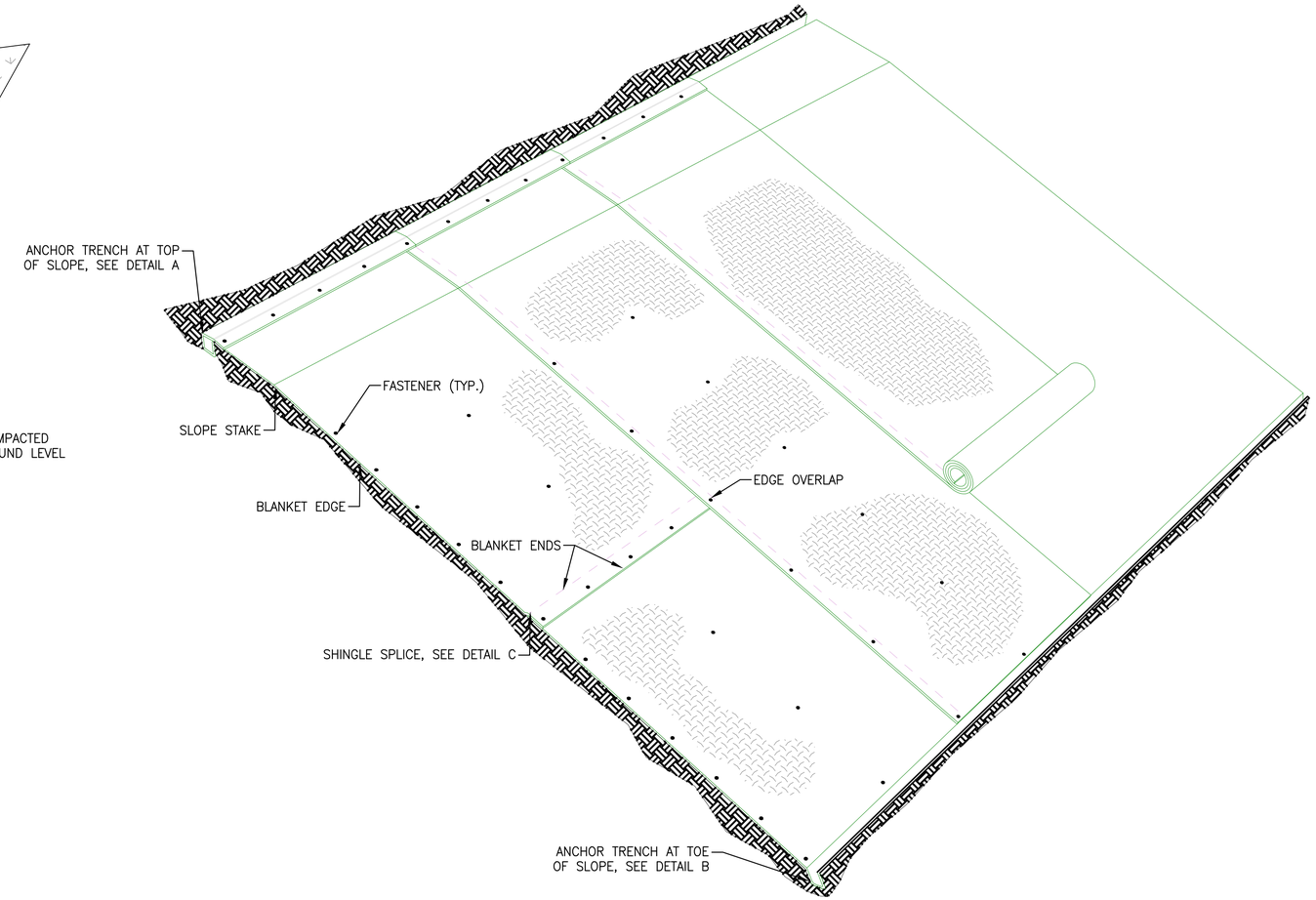

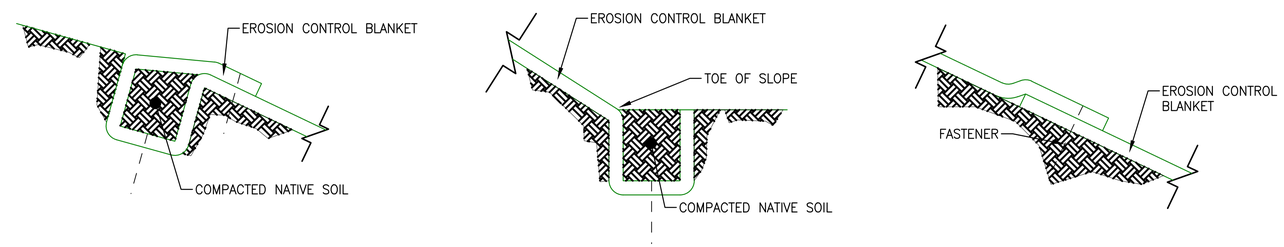

DETAIL A DETAIL B DETAIL C

NOTES:
1. INSTALL FASTENERS ACCORDING TO MANUFACTURER'S RECOMMENDATIONS.
2. OVERLAP IN THE DIRECTION OF THE PREVAILING WIND.
3. USE FULLY BIODEGRADABLE FIBER ROLLS AND EROSION CONTROL BLANKETS.

2 / C16 ROLLED EROSION CONTROL ON SLOPES

SCALE: N.T.S.

Mark	REVISION	Date	Initial

DESIGNED: NELSON ENGINEERING
CADD NE
TECH. REVIEW:
DATE: 04/08/2026

SUB SHEET NO. C16

CONSTRUCTION DOCUMENTS

TITLE OF SHEET
DETAILS

GLACIER NATIONAL PARK
REHABILITATE POLEBRIDGE WATER SYSTEM

DRAWING NO. 117 / 197288
PMIS/PKG NO. 329234B
SHEET 24 OF 35

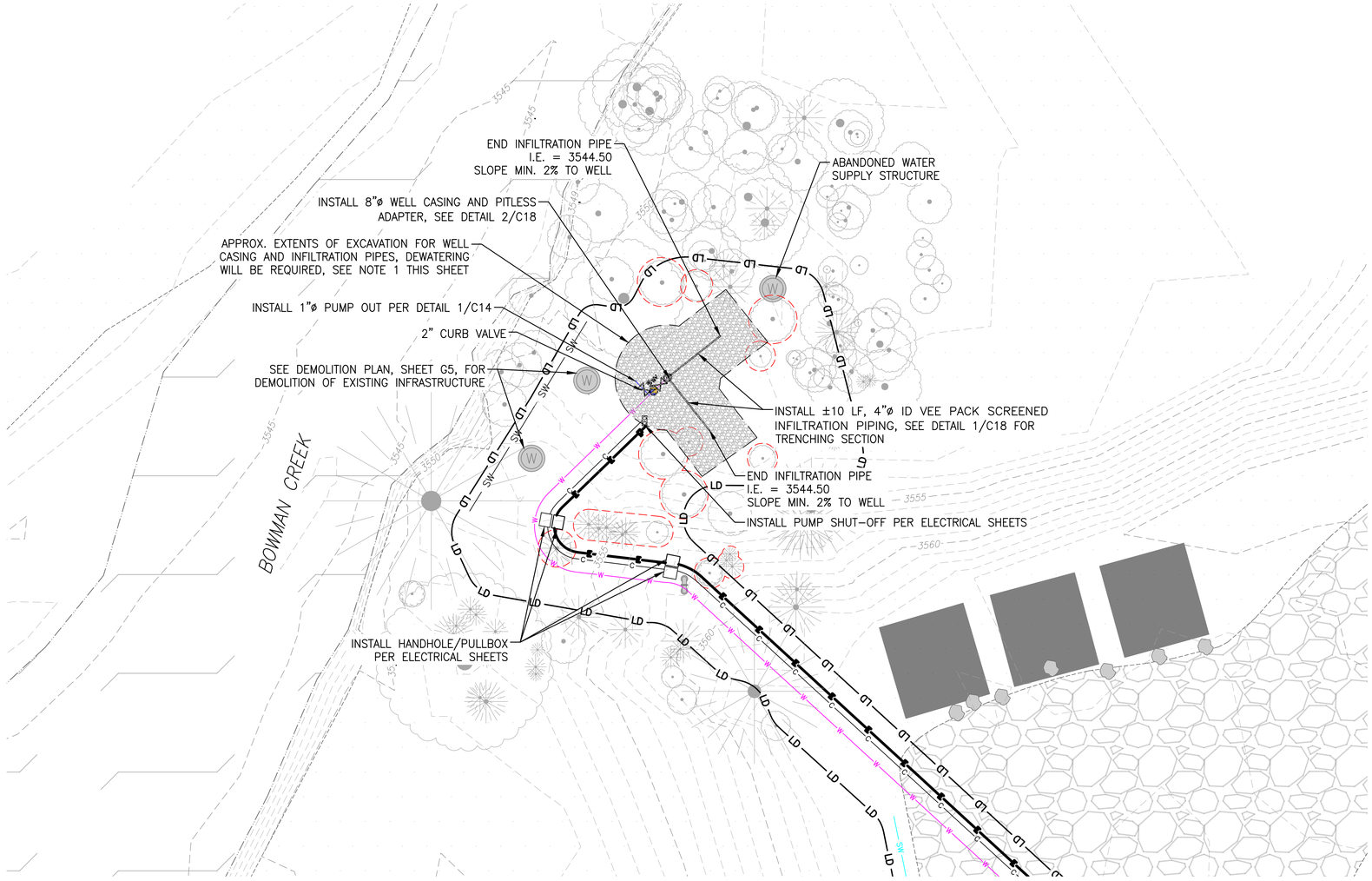

SITE PLAN

10 0 10 20

SCALE OF FEET

NOTES:

1. ALL WATERS SHALL BE DISCHARGED IN A MANNER TO PREVENT EROSION, SCOURING, OR DAMAGE TO STREAM BANKS, STREAM BEDS, DITCHES, OR OTHER WATERS AT THE POINT OF DISCHARGE. CONTRACTOR TO DESIGN A DEWATERING PLAN FOR APPROVAL BY THE CO.
2. REFER TO GEOTECHNICAL REPORT FOR TEST PIT LOGS AND ALL GEOTECHNICAL RECOMMENDATIONS.

CONTRACTOR NOTE:

CAUTION: UNDERGROUND UTILITY LOCATIONS ARE NOT GUARANTEED, NOR IS THERE ANY GUARANTEE THAT ALL EXISTING UTILITIES (WHETHER FUNCTIONAL OR ABANDONED) WITHIN THE PROJECT AREA ARE SHOWN ON THESE DRAWINGS. THE CONTRACTOR SHALL DETERMINE THE EXACT LOCATION OF ALL UNDERGROUND UTILITIES BEFORE STARTING WORK. THE CONTRACTOR SHALL BE RESPONSIBLE FOR ALL DAMAGE RESULTING FROM CONTRACTORS WORK.

Mark	REVISION	Date	Initial

DESIGNED: NELSON ENGINEERING

CADD NE

TECH. REVIEW:

DATE: 04/08/2026

SUB SHEET NO. C17

CONSTRUCTION DOCUMENTS

TITLE OF SHEET

INFILTRATION GALLERY SITE PLAN

GLACIER NATIONAL PARK
REHABILITATE POLEBRIDGE WATER SYSTEM

DRAWING NO. 117 / 197288

PMIS/PKG NO. 329234B

SHEET 25 OF 35

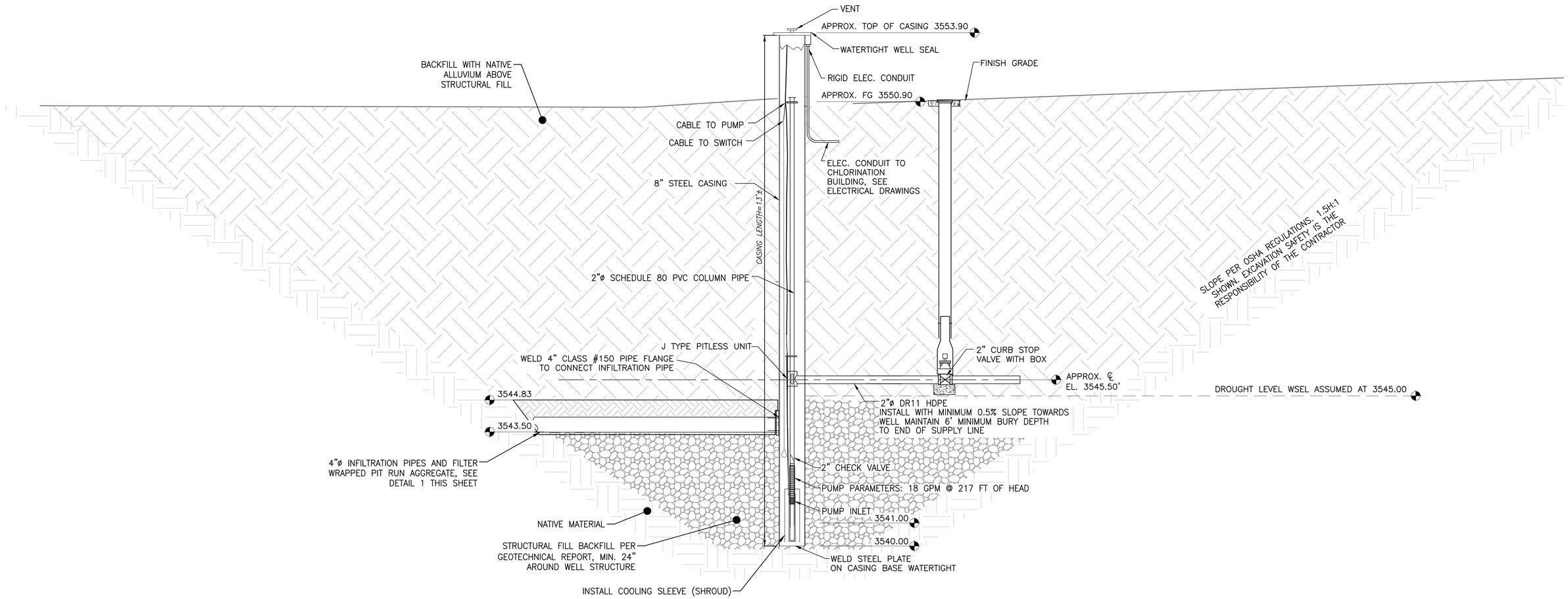

2 / C18 **WELL DETAIL**
SCALE: N.T.S.

NOTE: EXCAVATIONS MUST BE DEWATERED TO BASE OF EXCAVATION DURING WELL CASING AND INFILTRATION PIPE INSTALLATION AND BACKFILL

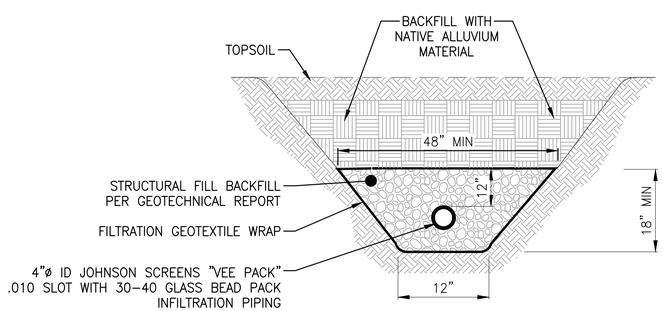

1 / C18 **INFILTRATION PIPE SECTION**
SCALE: N.T.S.

Mark	REVISION	Date	Initial

DESIGNED: NELSON ENGINEERING
CADD NE
TECH. REVIEW:
DATE: 04/08/2026

SUB SHEET NO. C18

CONSTRUCTION DOCUMENTS

TITLE OF SHEET
INFILTRATION GALLERY DETAILS

GLACIER NATIONAL PARK
REHABILITATE POLEBRIDGE WATER SYSTEM

DRAWING NO. 117 / 197288
PMIS/PKG NO. 329234B
SHEET 26 OF 35

ELECTRICAL SYMBOLS – PLANS

SYMBOL	SYMBOL DESCRIPTION
	DUPLEX RECEPTACLE (WP, GFCI AS INDICATED)
	QUAD RECEPTACLE (WP, GFCI AS INDICATED)
J	JUNCTION BOX
$3	SWITCH (3 = 3-WAY SWITCH, 4 = 4-WAY SWITCH, ETC.)
a	LIGHTING LUMINAIRE CONTROLLED BY SWITCH a
a	LIGHTING LUMINAIRE CONTROLLED BY SWITCH a W/ EMERGENCY BATTERY PACK
	EMERGENCY LIGHT
	WALL MOUNTED LUMINAIRE
	EXIT LIGHT
	POLE MOUNTED LUMINAIRE
A — LUMINAIRE TYPE 150 — LAMP WATTAGE	LUMINAIRE REFERENCE SEE LUMINAIRE SCHEDULE FOR DETAILS
P001	CONDUIT REFERENCE A = ANALOG SIGNAL C = CONTROL D = DATA LINK F = FIBER OPTIC P = POWER T = TELEPHONE
	CONDUIT OR DUCT BANK IN SLAB OR UNDERGROUND
	EXPOSED CONDUIT
GND	GROUNDING CONDUCTOR 30" BELOW GRADE
A–3	HOMERUN TO PANEL "A", CIRCUIT 3
	CONDUIT STUBBED AND CAPPED
	CONDUIT BENDS TOWARD OBSERVER
	CONDUIT BENDS AWAY FROM OBSERVER
J	FLEXIBLE CONDUIT CONNECTION (FROM COUPLING/STUB-UP OR JBOX)
	PANELBOARD
	DISCONNECT SWITCH
	COMBINATION STARTER & DISCONNECT SWITCH
	HANDHOLE OR PULL BOX
DS	DUCT SMOKE DETECTOR
	SMOKE DETECTOR
F	FIRE ALARM MANUAL PULL STATION
F	FIRE ALARM STROBE
	TELEPHONE OUTLET
	DATA OUTLET
	VOICE/DATA OUTLET
	CONDUIT SEAL
—F—F—F—	CONDUIT & WIRE FOR FIRE ALARM SYSTEM
—R—R—R—	CONDUIT & WIRE FOR ELECTRONIC KEY PAD TO PLC
KP	ELECTRONIC KEYPAD
FACP	FIRE ALARM CONTROL PANEL
	LOCAL CONTROL SWITCH
T	THERMOSTAT
IS	INTRUSION SWITCH
40	MOTOR (NUMBER INDICATES HORSEPOWER)
M	WALL MOUNTED OCCUPANCY SENSOR
M	CEILING MOUNTED OCCUPANCY SENSOR
D	WALL MOUNTED DIMMER
	GROUND WELL
	LIGHTNING AND SURGE ARRESTOR

ELECTRICAL SYMBOLS – SCHEMATIC DIAGRAMS

NORMALLY OPEN	NORMALLY CLOSED	SYMBOL DESCRIPTION
		CONTACT
		TIMED CONTACT, CONTACT ACTION REVERSES ON ENERGIZATION (ON DELAY)
		TIMED CONTACT, CONTACT ACTION REVERSES ON DE-ENERGIZATION (OFF DELAY)
		LEVEL SWITCH
		PRESSURE SWITCH
		TEMPERATURE SWITCH
		LIMIT SWITCH
		FLOW SWITCH
		PUSH BUTTON SINGLE CIRCUIT MOMENTARY CONTACT
HAND OFF AUTO XOO OXO OOX		SELECTOR SWITCH HOA: HAND–OFF–AUTO (HOA SHOWN IN HAND MODE) HO: HAND–OFF HOR: HAND–OFF–REMOTE R–O: REMOTE–OFF SEE SYMBOLE NOTE 2.
O/L		MOTOR OVERLOAD DEVICE CONTACTS
R		PILOT LIGHT A= AMBER, G= GREEN, R= RED, W= WHITE
CR1	AR1	CONTROL RELAY
TD1		TIME DELAY RELAY
M		MOTOR OR STARTER COIL
		SOLENOID OPERATED VALVE
ETM		ELAPSED TIME METER
		FUSE
		CONTROL POWER TRANSFORMER
		GROUND
		MOTOR SPACE HEATER
		THERMISTOR

SYMBOL NOTES

1. THIS DRAWING CONTAINS INDUSTRY STANDARD SYMBOLS. NOT ALL SYMBOLS SHOWN ARE USED ON THIS PROJECT.
2. FOR HOA SWITCHES, "XOO" INDICATES THAT THE TOP CONTACT IS CLOSED WHEN THE SWITCH IS SET TO HAND MODE, AND ALL OTHER SWITCH CONTACTS ARE OPEN; "OXO" INDICATES THAT THE MIDDLE CONTACT IS CLOSED WHEN THE SWITCH IS SET TO OFF MODE, AND ALL OTHER SWITCH CONTACTS ARE OPEN; "OOX" INDICATES THAT THE BOTTOM CONTACT IS CLOSED WHEN SWITCH IS IN AUTOMATIC MODE, ALL OTHER SWITCH CONTACTS ARE OPEN.

ANSI/IEEE C37.2 STANDARD DEVICE NUMBERS

THE FOLLOWING IS A LIST OF TYPICAL DEVICE NUMBERS. SEE ANSI/IEEE C37.2 FOR A COMPLETE LIST OF DEVICES.

11	MULTI-FUNCTION DEVICE
27	UNDERVOLTAGE RELAY
32	DIRECTIONAL POWER RELAY OR REVERSE POWER RELAY
37	UNDERCURRENT OR UNDERPOWER RELAY
42	RUNNING CIRCUIT BREAKER
47	PHASE SEQUENCE OR PHASE–BALANCE VOLTAGE RELAY
50	INSTANTANEOUS OVERCURRENT RELAY
51	AC INVERSE TIME OVERCURRENT RELAY
52	AC CIRCUIT BREAKER
55	POWER FACTOR RELAY
57	SHORT–CIRCUITING OR GROUNDING DEVICE
59	OVERVOLTAGE RELAY
67	AC DIRECTIONAL OVERCURRENT RELAY
86	LOCKOUT RELAY
87	DIFFERENTIAL PROTECTIVE RELAY

ELECTRICAL SYMBOLS – SINGLE LINE DIAGRAM

DEVICE	SYMBOL DESCRIPTION
	DRY TYPE TRANSFORMER
	IRON CORE TRANSFORMER
	POTENTIAL TRANSFORMER
	CURRENT TRANSFORMER
	FUSE
40	MOTOR, 40 HORSEPOWER
	GROUNDING ELECTRODE
600AF 400AT	LOW VOLTAGE CIRCUIT BREAKER MCCB UNLESS OTHERWISE NOTED
52	MEDIUM VOLTAGE CIRCUIT BREAKER, DRAW–OUT TYPE SEE ANSI/IEEE C37.2 STANDARD DEVICE NUMBERS LIST THIS SHEET
	FUSED DISCONNECT SWITCH WITH CURRENT LIMITING FUSES
VFD	VARIABLE FREQUENCY DRIVE
SSS	SOLID STATE STARTER (SOFT STARTER)
SPD	SURGE PROTECTION DEVICE
PQM	POWER QUALITY MONITOR
SST	SOLID STATE TRIP
MPR	MOTOR PROTECTION RELAY
	NON–FUSED DISCONNECT SWITCH, 30A/3P UON
	FUSED DISCONNECT SWITCH, 30A/3P UON
	VALVE MOTOR AND ACTUATOR
	MOTOR OVERLOAD HEATER
FVNR1	MAGNETIC MOTOR STARTER FVNR1 = FULL VOLTAGE NON–REVERSING, NEMA SIZE 1 RV2S2W = REDUCED VOLTAGE 2–SPEED, 2–WINDING
47	PROTECTION RELAY SEE ANSI/IEEE C37.2 STANDARD DEVICE NUMBERS LIST
M	METER, ELECTRIC UTILITY GRADE UON
	ELECTRIC VEHICLE CHARGER

ELECTRICAL ABBREVIATIONS

(D)	DEMOLISH
(E)	EXISTING
(F)	FUTURE
(N)	NEW
(R)	RELOCATE
A	AMPERES, ANALOG SIGNAL
AC	ALTERNATING CURRENT
AF	AMPERES FRAME
AFF	ABOVE FINISHED FLOOR
AFG	ABOVE FINISHED GRADE
AIC	AMPERES INTERRUPTING CAPACITY
AT	AMPERES TRIP
AWG	AMERICAN WIRE GAUGE
BC	BARE COPPER
BFG	BELOW FINISHED GRADE
C	CONDUIT
CB	CIRCUIT BREAKER
CCT	CORRELATED COLOR TEMPERATURE
CO	CONDUIT ONLY
CP	CONTROL PANEL
CPT	CONTROL POWER TRANSFORMER
CRI	COLOR RENDERING INDEX
CT	CURRENT TRANSFORMER
CU	COPPER
DC	DIRECT CURRENT
DSB	DISTRIBUTION SWITCHBOARD
EF	EXHAUST FAN
EHH	ELECTRICAL HANDHOLE
ELEV	ELEVATION
ETM	ELAPSED TIME METER
FCB	FEEDER CIRCUIT BREAKER
FIT	FLOW INDICATING TRANSMITTER
FLEX	FLEXIBLE
FLUOR	FLUORESCENT
FPP	FIBER OPTIC PATCH PANEL
FPR	FEEDER PROTECTION RELAY
FVNR	FULL VOLTAGE NON–REVERSING STARTER
G, GND	GROUND
GFCI	GROUND FAULT CIRCUIT INTERRUPTER
H	HALOGEN
HH	HANDHOLE
HID	HIGH INTENSITY DISCHARGE
HMI	HUMAN MACHINE INTERFACE
HOA	HAND / OFF / AUTOMATIC
HP	HORSEPOWER
HPS	HIGH PRESSURE SODIUM
HS	HAND SWITCH
INCAND	INCANDESCENT
JB, JBOX	JUNCTION BOX
KAIC	KILOAMPERES INTERRUPTING CAPACITY
KVA	KILOVOLT–AMPERE
KW	KILOWATT
KWH	KILOWATT–HOUR
LED	LIGHT EMITTING DIODE
LCP	LOCAL CONTROL PANEL
LIT	LEVEL INDICATING TRANSMITTER
LOS	LOCKOUT STOP SWITCH
LSH	LEVEL SWITCH HIGH
LSLL	LEVEL SWITCH LOW–LOW
LV	LOW VOLTAGE
MCB	MAIN CIRCUIT BREAKER
MCC	MOTOR CONTROL CENTER
MCCB	MOLDED CASE CIRCUIT BREAKER
MCP	MOTOR CIRCUIT PROTECTOR
MH	METAL HALIDE, MANHOLE
MIN	MINIMUM
MLO	MAIN LUG ONLY
MPC	MINI POWER CENTER
MPR	MOTOR PROTECTION RELAY
NC	NORMALLY CLOSED
NIC	NOT IN CONTRACT
NO	NORMALLY OPEN
NO.	NUMBER
NTS	NOT TO SCALE
P	POLE
PB	PUSHBUTTON, PULLBOX
PCS	PVC COATED STEEL
PCV	PRESSURE CONTROL VALVE
PDIT	PRESSURE DIFFERENTIAL INDICATING TRANSMITTER
PE	PHOTOELECTRIC
PFR	PHASE FAILURE RELAY
PH	PHASE
PIT	PRESSURE INDICATING TRANSMITTER
PLC	PROGRAMMABLE LOGIC CONTROLLER
PQM	POWER QUALITY MONITOR
PSH	PRESSURE SWITCH HIGH
PT	POTENTIAL TRANSFORMER
PTC	POSITIVE TEMPERATURE COEFFICIENT RESISTOR
REC, RECEPT	RECEPTACLE
RIO	REMOTE I/O
RGS	RIGID GALVANIZED STEEL
SCCR	SHORT CIRCUIT CURRENT RATING
SCE	SOUTHERN CALIFORNIA EDISON
SPD	SURGE PROTECTION DEVICE
SSS	SOLID STATE STARTER (SOFT STARTER)
SWBD	SWITCHBOARD
TEMP	TEMPERATURE
TYP	TYPICAL
UON	UNLESS OTHERWISE NOTED
V	VOLT(S)
VA	VOLT–AMPERE
VFD	VARIABLE FREQUENCY DRIVE
W	WATT, WIRE
WP	WEATHERPROOF
XFMR	TRANSFORMER

GENERAL ELECTRICAL NOTES

1. REFER TO ELECTRICAL SPECIFICATIONS FOR FURTHER DETAIL AS TO SCOPE, MATERIALS, AND EXECUTION OF ELECTRICAL WORK.
2. ALL MEDIUM VOLTAGE WIRING DESIGN IS BASED ON 90° CELSIUS CONDITIONS FOR COPPER CONDUCTORS. ALL LOW VOLTAGE WIRING DESIGN IS BASED ON 75° CELSIUS CONDITIONS FOR COPPER CONDUCTORS OF TYPE THHN/THWN UNLESS OTHERWISE STATED.
3. ELECTRICAL CONTRACTOR TO SIZE ALL WIRING NOT EXPLICITLY SHOWN ON DRAWINGS ACCORDING TO THE REQUIREMENTS OF NATIONAL ELECTRICAL CODE (NEC) FOR THE SPECIFIC APPLICATION AND CONDITIONS.
4. ALL CONDUCTORS SHALL BE COPPER (MINIMUM SIZE #12 AWG UNLESS SPECIFICALLY NOTED OTHERWISE).
5. THE ELECTRICAL CONTRACTOR SHALL CONFORM WITH ALL LOCAL CODES AND ORDINANCES, THE NATIONAL ELECTRICAL CODE, AND ANY ADDITIONAL JURISDICTIONS RELATING TO THE WORK.
6. THE ELECTRICAL CONTRACTOR SHALL FURNISH AND INSTALL ALL CONDUIT, WIRE, SERVICES, SWITCHBOARDS, AND VARIABLE FREQUENCY DRIVE'S REQUIRED FOR A COMPLETE AND OPERATIONAL ELECTRICAL SYSTEM.
7. IN THE EVENT OF A CONFLICT OR INCONSISTENCY BETWEEN ITEMS INDICATED ON THE PLANS AND/OR SPECIFICATIONS, OR WITH CODE REQUIREMENTS, THE NOTE, SPECIFICATION OR CODE WHICH PRESCRIBES AND ESTABLISHES THE MORE COMPLETE JOB OR HIGHER STANDARD SHALL PREVAIL.
8. ALL ELECTRICAL EQUIPMENT EXPOSED TO THE CLIMATE SHALL BE WEATHERPROOF.
9. ALL ELECTRICAL EQUIPMENT IN THIS PROJECT SHALL BE U.L. LISTED.
10. ALL UNDERGROUND CONDUIT SHALL BE INSTALLED AT 36" BELOW FINISHED GRADE MINIMUM UNLESS OTHERWISE NOTED.
11. THE ELECTRICAL CONTRACTOR SHALL BE RESPONSIBLE FOR LOCATING EXISTING UNDERGROUND FACILITIES AND PROTECTING THESE FACILITIES FROM DAMAGE.
12. THE ELECTRICAL CONTRACTOR SHALL ROUTE CONDUITS AS REQUIRED BY FIELD CONDITIONS AND PER NEC.
13. THE ELECTRICAL CONTRACTOR SHALL BE RESPONSIBLE FOR REPAIRING ANY DAMAGE TO EXISTING UNDERGROUND FACILITIES.
14. CONTRACTOR SHALL PROVIDE ALL NEEDED CHANNELS, ANGLES, AND ANY OTHER MATERIALS REQUIRED TO SUPPORT LUMINAIRES, CONDUIT, AND ELECTRICAL EQUIPMENT IN THE LOCATIONS SHOWN ON THE DRAWINGS.
15. CONTRACTOR SHALL NOT CUT ANY STRUCTURAL MEMBERS OR USE ANY ATTACHMENTS THAT WOULD IMPAIR THEIR STRENGTH.
16. CONTRACTOR SHALL DESIGN SUPPORTS IN BETWEEN THE STRUCTURAL SUPPORT MEMBERS AND SUBMIT THE DESIGN AS A SHOP DRAWING SUBMITTAL.
17. INSTRUMENTATION IS SHOWN IN THE GENERAL VICINITY OF THE INTENDED LOCATION AND MAY NOT NECESSARILY MATCH LOCATIONS ON THE PLANS. VERIFY ACTUAL LOCATIONS OF INSTRUMENTS AND RUN ASSOCIATED CONDUITS AS REQUIRED.
18. ALL EXPOSED CONDUITS TO BE GALVANIZED RIGID STEEL CONDUIT FOR DRY LOCATIONS AND PVC COATED GALVANIZED RIGID STEEL CONDUIT IN WET LOCATION UNLESS OTHERWISE STATED ON THE PLANS.

Mark	REVISION	Date	Initial

DESIGNED: NELSON ENGINEERING
CADD D. PHAN
TECH. REVIEW: T. MOORE
DATE: 11/24/2025

SUB SHEET NO. E1

CONSTRUCTION DOCUMENTS

TITLE OF SHEET
ELECTRICAL LEGEND ABBREVIATION, & SYMBOLS

GLACIER NATIONAL PARK
REHABILITATE POLEBRIDGE WATER SYSTEM

DRAWING NO. 117 / 197288
PMIS/PKG NO. 329234B
SHEET 27 OF 35

NOTE:

1. SEE E8 FOR CONDUIT AND WIRE SCHEDULE.

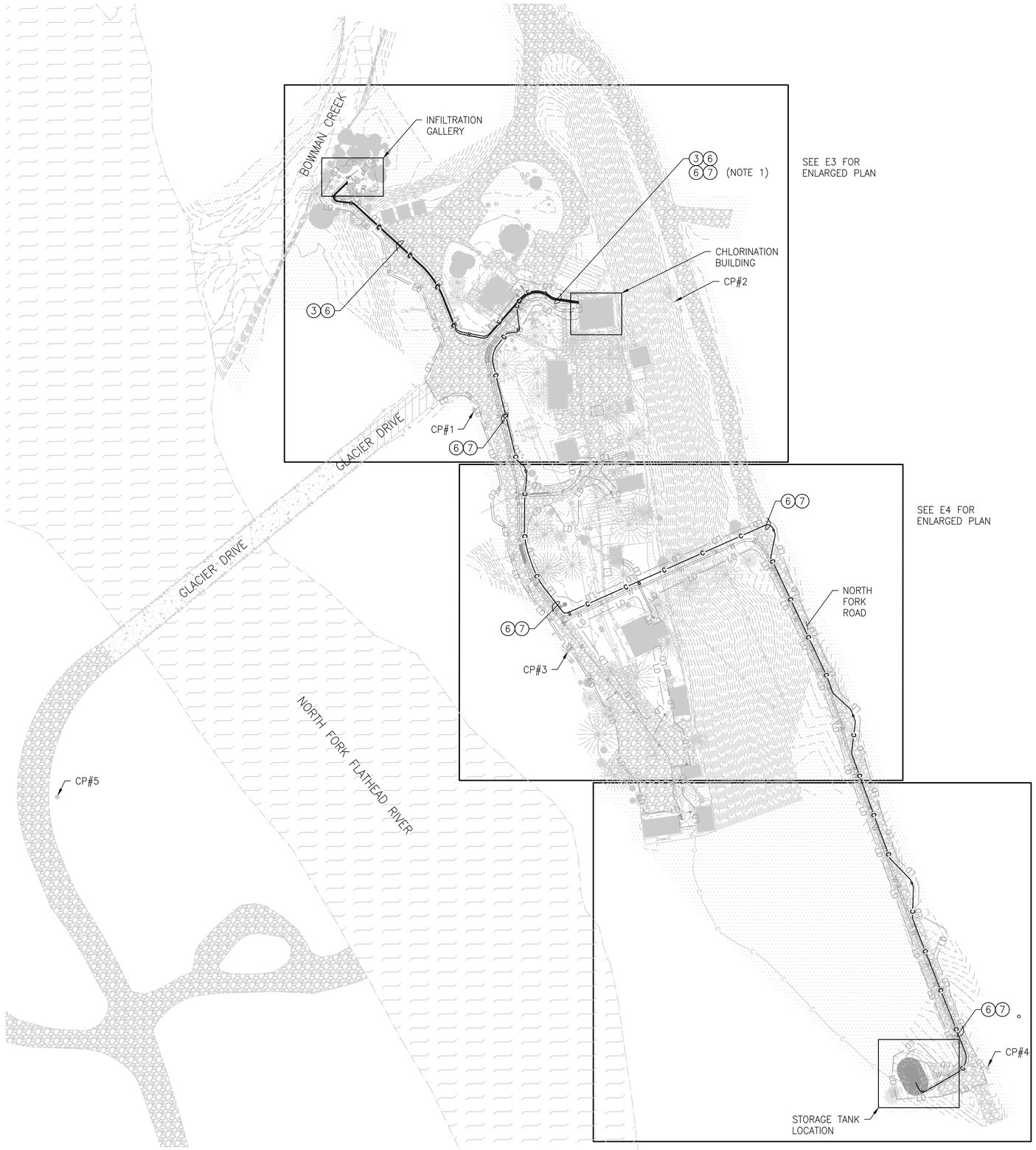

60 0 60 120 1" = 60'

SCALE OF FEET

Mark	REVISION	Date	Initial

DESIGNED: NELSON ENGINEERING

CADD D. PHAN

TECH. REVIEW: T. MOORE

DATE: 11/24/2025

SUB SHEET NO. E2

CONSTRUCTION DOCUMENTS

TITLE OF SHEET

ELECTRICAL SITE PLAN

GLACIER NATIONAL PARK
REHABILITATE POLEBRIDGE WATER SYSTEM

DRAWING NO. 117
197288

PMIS/PKG NO. 329234B

SHEET 28 OF 35

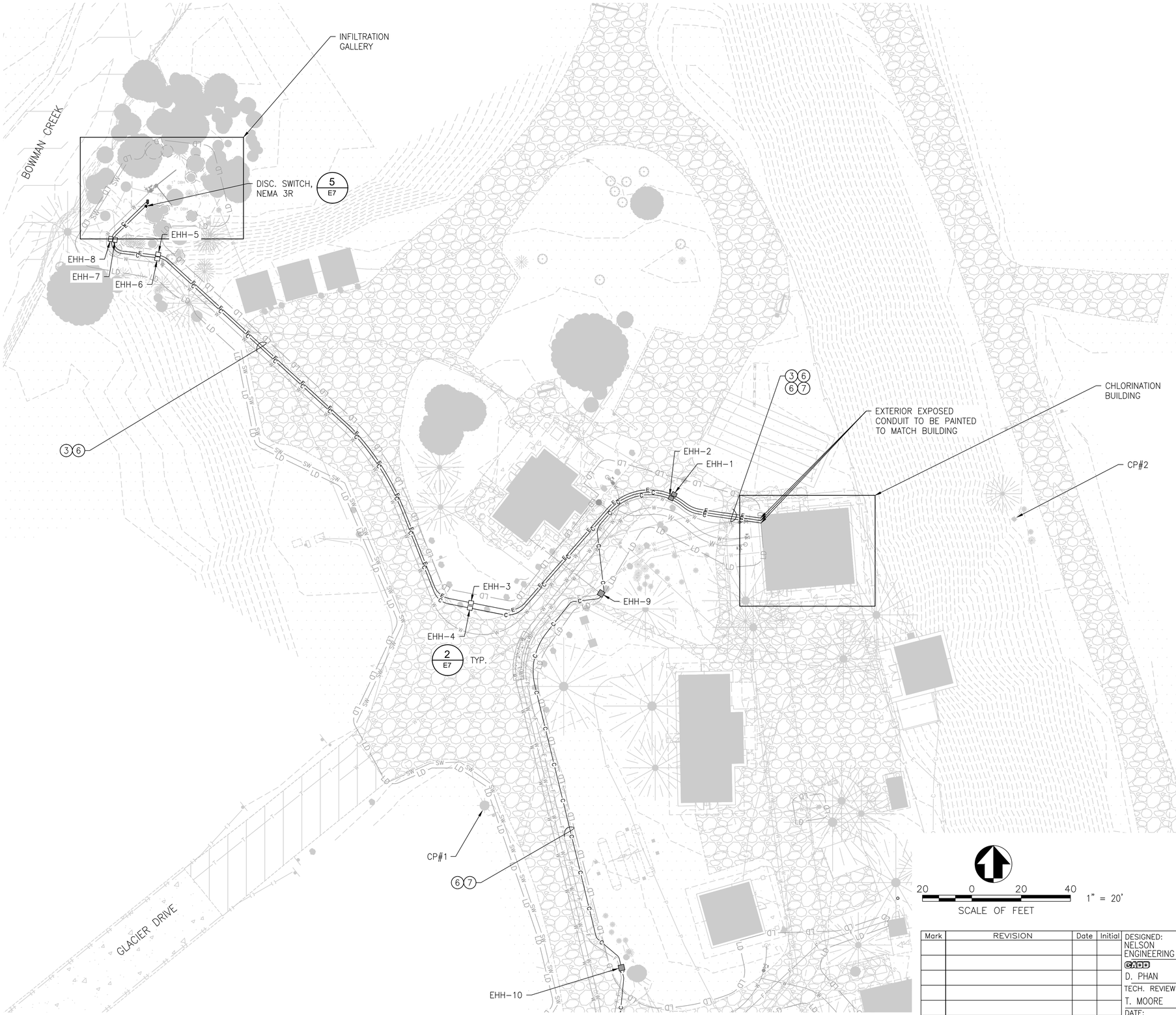

NOTE:

1. SEE E8 FOR CONDUIT AND WIRE SCHEDULE.

KEYNOTE:

1. INSTALL ALL HAND HOLES 36" MINIMUM FROM ROAD EDGE, TYPICAL.

20 0 20 40 1" = 20'

SCALE OF FEET

Mark	REVISION	Date	Initial

DESIGNED: NELSON ENGINEERING

CADD D. PHAN

TECH. REVIEW: T. MOORE

DATE: 11/24/2025

SUB SHEET NO. E3

CONSTRUCTION DOCUMENTS

TITLE OF SHEET

ENLARGED ELECTRICAL SITE PLAN

GLACIER NATIONAL PARK
REHABILITATE POLEBRIDGE WATER SYSTEM

DRAWING NO. 117 197288

PMIS/PKG NO. 329234B

SHEET 29 OF 35

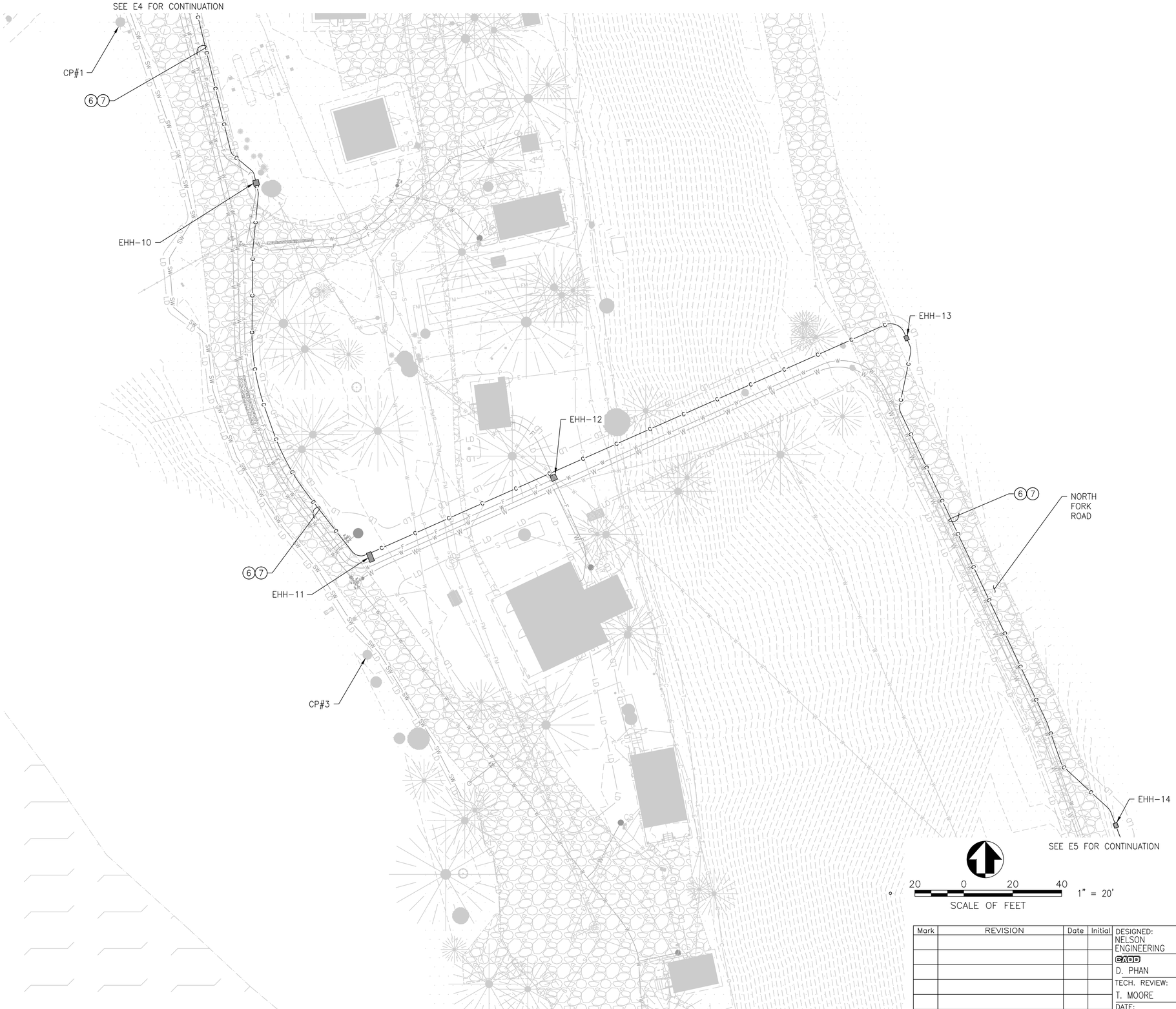

NOTE:

1. SEE E8 FOR CONDUIT AND WIRE SCHEDULE.

KEYNOTE:

1. INSTALL ALL HAND HOLES 36" MINIMUM FROM ROAD EDGE, TYPICAL.

Mark	REVISION	Date	Initial

DESIGNED: NELSON ENGINEERING
CADD D. PHAN
TECH. REVIEW: T. MOORE
DATE: 11/24/2025

SUB SHEET NO. E4

CONSTRUCTION DOCUMENTS

TITLE OF SHEET
ENLARGED ELECTRICAL SITE PLAN

GLACIER NATIONAL PARK
REHABILITATE POLEBRIDGE WATER SYSTEM

DRAWING NO. 117 / 197288
PMIS/PKG NO. 329234B
SHEET 30 OF 35

NOTE:

1. SEE E8 FOR CONDUIT AND WIRE SCHEDULE.

KEYNOTE:

1. INSTALL ALL HAND HOLES 36" MINIMUM FROM ROAD EDGE, TYPICAL.

20 0 20 40 1" = 20'

SCALE OF FEET

CONSTRUCTION DOCUMENTS

Mark	REVISION	Date	Initial

DESIGNED: NELSON ENGINEERING

CADD D. PHAN

TECH. REVIEW: T. MOORE

DATE: 11/24/2025

SUB SHEET NO. E5

TITLE OF SHEET

ENLARGED ELECTRICAL SITE PLAN

GLACIER NATIONAL PARK
REHABILITATE POLEBRIDGE WATER SYSTEM

DRAWING NO. 117

197288

PMIS/PKG NO. 329234B

SHEET 31 OF 35

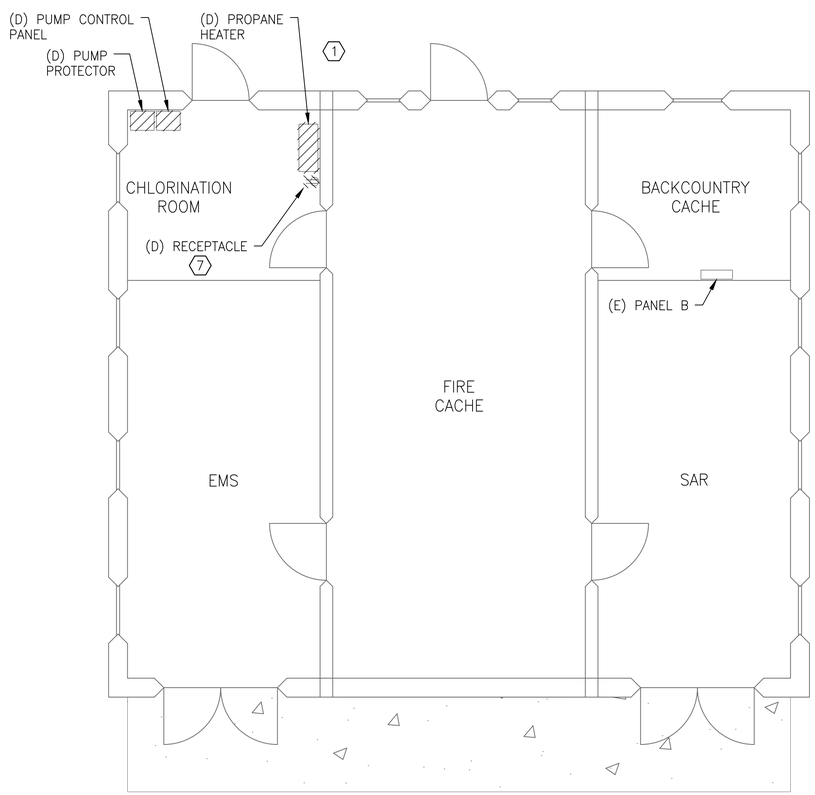

ELECTRICAL DEMOLITION PLAN

SCALE: 1" = 4'

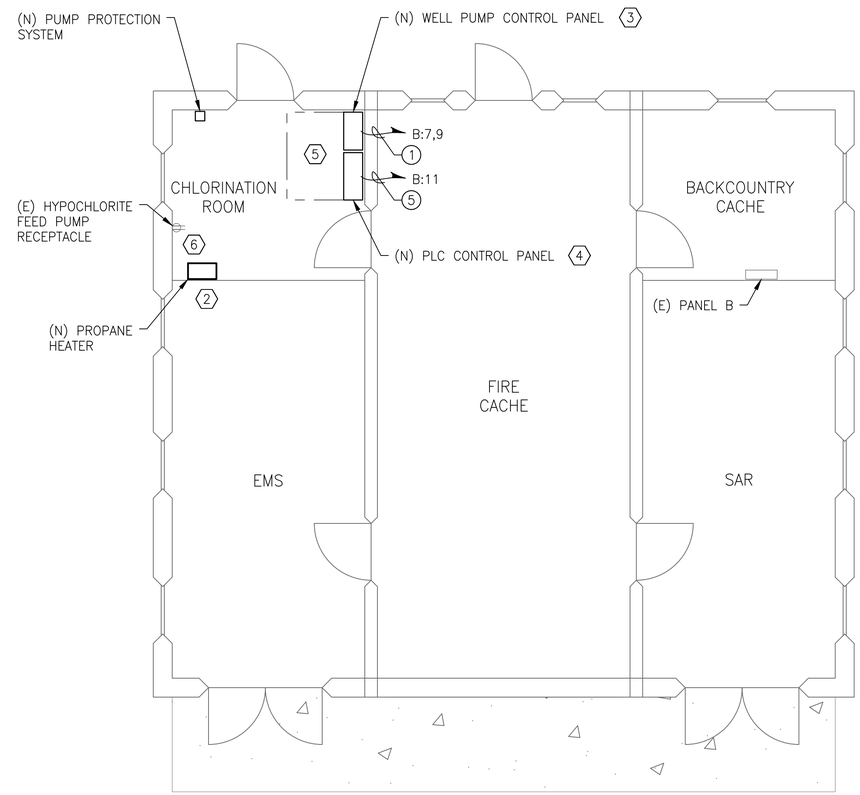

ELECTRICAL MODIFICATIONS PLAN

SCALE: 1" = 4'

NOTE:

1. SEE E8 FOR DETAILS.

KEYNOTES: ⟨–⟩

1. REMOVE EXISTING PROPANE HEATER WITH CARE, RETURN IT TO THE OWNER.
2. PROVIDE NEW WALL MOUNT 6000 BTU, VENT FREE, PROPANE HEATER. APPROXIMATE DIMENSIONS 20"Hx 18"Wx 10"D. MOUNT TOP AT 5 FEET AFF. EXTEND EXISTING GAS PIPING AND ELECTRICAL CIRCUIT TO NEW HEATER LOCATION.
3. WELL PUMP CONTROL PANEL APPROXIMATE DIMENSIONS 24"Wx 12"D.
4. PLC CONTROL PANEL APPROXIMATE DIMENSIONS 30"Wx 12"D.
5. MAINTAIN 36" CLEARANCE SPACE IN FRONT OF PANELS.
6. SEE E9 FOR DETAILS.
7. DEMO RECEPTACLES ON BOTH SIDES OF WALL. INSTALL NEW RECEPTACLE IN FIRE CACHE ROOM.

4 0 4 8 1" = 4'

SCALE OF FEET

CONSTRUCTION DOCUMENTS

Mark	REVISION	Date	Initial

DESIGNED: NELSON ENGINEERING
CADD
D. PHAN
TECH. REVIEW:
T. MOORE
DATE:
11/24/2025

SUB SHEET NO.
E6

TITLE OF SHEET
CHLORINATION BUILDING
ELECTRICAL POWER PLANS

GLACIER NATIONAL PARK
REHABILITATE POLEBRIDGE WATER SYSTEM

DRAWING NO.
117
197288

PMIS/PKG NO.
329234B

SHEET
32 OF 35

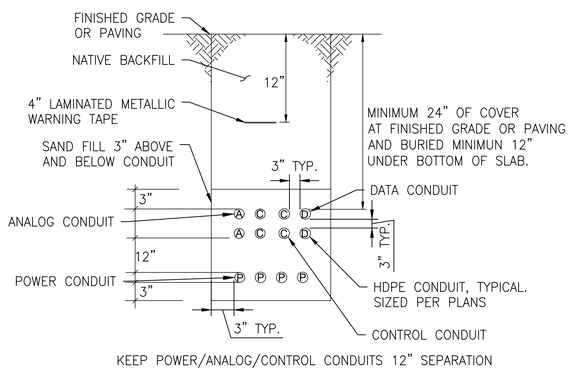

NOTE:
1. THIS DETAIL SHOWS A TYPICAL UNDERGROUND DUCT BANK CROSS SECTION. COORDINATE NUMBER OF CONDUITS WITH PLANS AND PROVIDE UNDER SLAB NECESSARY TO ACCOMMODATE ALL CONDUITS.

1 / E7 TYPICAL DUCT BANK
N.T.S

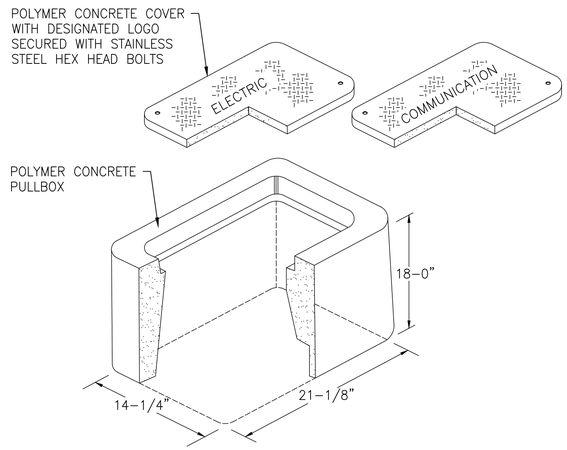

NOTES:
1. BOX DIMENSIONS VARIED UPON ACTUAL FIELD REQUIREMENT.
2. INSTALL HANDHOLE/PULLBOX 36" MINIMUM FROM ROAD EDGE.
3. HANDHOLE/PULLBOX MEET ANSI/SCTE-77 TIER 22 HEAVY DUTY.
4. COVER WITH TEXT "COMMUNICATION" OR "ELECTRIC" MARKING ACCORDINGLY. SLIP RESISTANT PER ASTM C1028.

2 / E7 TYPICAL HANDHOLE/PULLBOX
N.T.S

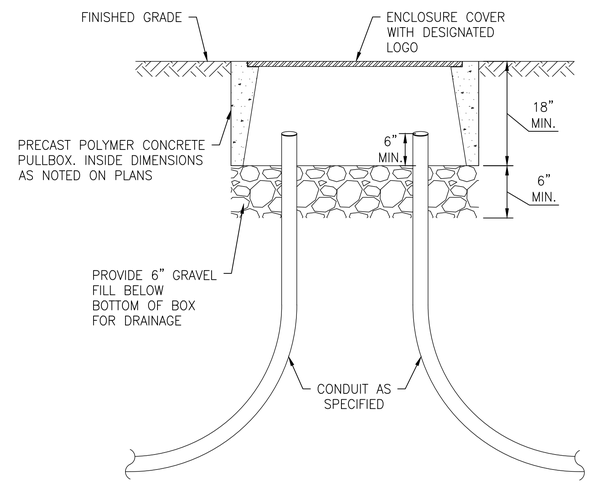

3 / E7 TYPICAL CONDUITS INSTALLED IN HANDHOLE/PULLBOX
N.T.S

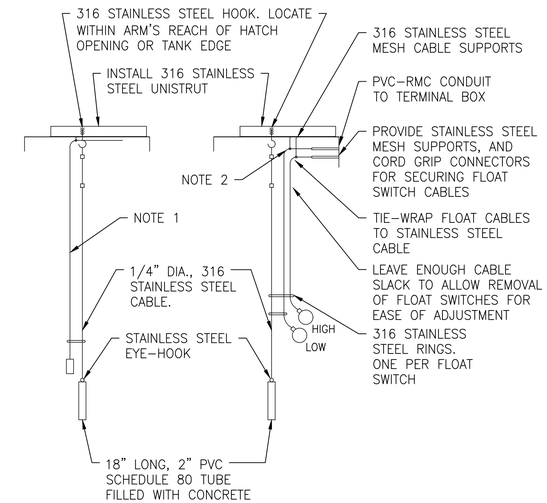

NOTES:
1. ANALOG SIGNAL WIRING, 1- #16 TSP, 3/4"C FOR LEVEL TRANSDUCER
2. DISCRETE SIGNAL WIRING, 5- #14, 3/4"C FOR LEVEL FLOAT SWITCHES
3. REFER TO CABLE SCHEDULE CONTRACT DRAWINGS FOR CONDUCTOR SIZING AND QUANTITIES.

4 / E7 LEVEL TRANSDUCER MOUNTING DETAIL
N.T.S

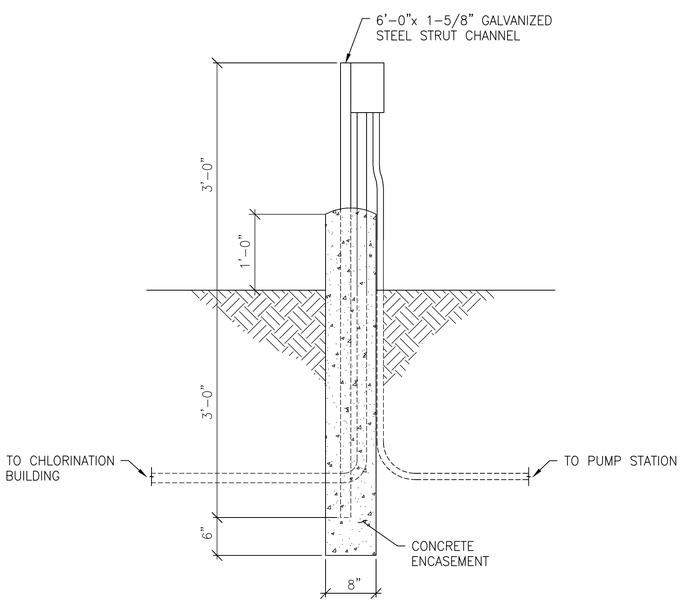

5 / E7 DISCONNECT SWITCH SUPPORT DETAIL
N.T.S

Mark	REVISION	Date	Initial

DESIGNED: NELSON ENGINEERING
CADD D. PHAN
TECH. REVIEW: T. MOORE
DATE: 11/24/2025

SUB SHEET NO. E7

CONSTRUCTION DOCUMENTS

TITLE OF SHEET
ELECTRICAL DETAILS

GLACIER NATIONAL PARK
REHABILITATE POLEBRIDGE WATER SYSTEM

DRAWING NO. 117
197288
PMIS/PKG NO. 329234B
SHEET 33 OF 35

PANELBOARD: B (EXISTING)	BUS AMPS: 100	VOLTS: 240/120
LOCATION: BACKCOUNTRY CACHE	MCB AMPS: 40	PHASE: 1
FROM: DISTRIBUTION PANEL IN GENERATOR BLDG.	MOUNTING: SURFACE	WIRE: 3
	SCCR:	

LOAD DESCRIPTION	KVA A	KVA B	CKT	BKR	BRK	CKT	KVA A	KVA B	LOAD DESCRIPTION
LIGHTING - INTERIOR	1.200		1	20	20	2	1.260		SAR / STOR. RECEPTACLES
LIGHTING - EXTERIOR		0.150	3	20	20	4		1.080	FIRE CACHE RECEPTACLES
UNIT HEATER (2)	0.150		5	20	20	6			SPARE
WELL PUMP CONTROL PANEL		**0.920**	7	20	20	8		1.080	WATER RECEPTACLES
	0.920		9		20	10			SPARE
PLC CONTROL PANEL		**0.100**	11	20	20	12		0.180	TTB RECEPTACLES
SEWER PUMP	1.150			30		14			SPACE
		1.150				16			SPACE
SPACE			17			18			SPACE
SPACE			19			20			SPACE
SPACE			21			22			SPACE
SPACE			23			24			SPACE
	3.420	2.320	TOTAL				1.260	2.340	
	PHASE LOAD		TOTAL LOAD				TOTAL AMPS		
CONNECTED	4.7	4.7	9 KVA				39 A		

EXISTING PANEL B

KEYNOTES:

1. WELL PUMP AND LEVEL SENSOR LOCATED AT INFILTRATION GALLERY AREA. SEE E2 AND CIVIL DRAWINGS FOR DETAILS.

2. INSTRUMENTATIONS LOCATED AT STORAGE TANK, SEE E2 AND CIVIL DRAWINGS FOR DETAILS.

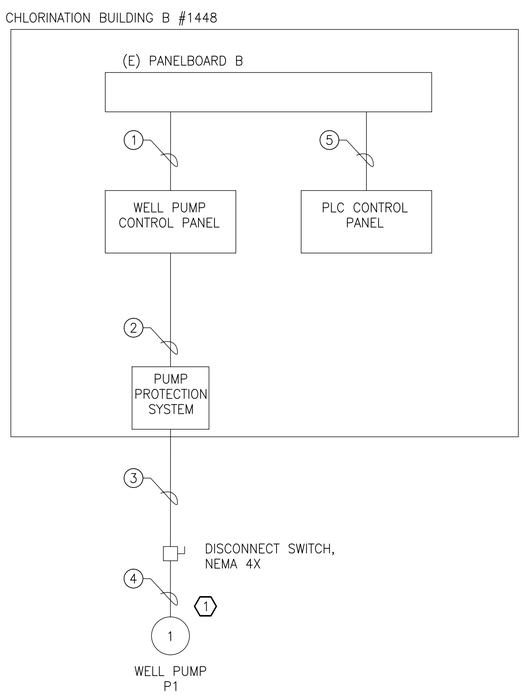

POWER ONE-LINE DIAGRAM

CONDUIT/WIRE SCHEDULE:

1. 3– #12, 1– #12 GND, 3/4"C RGS
2. 2– #12, 1– #12 GND, 3/4"C RGS
3. 2– #10, 1– #10 GND, 1"C HDPE
4. PROVIDED BY PUMP VENDOR
5. 2– #12, 1– #12 GND, 3/4"C RGS
6. 1– #16 TSP, 1"C HDPE
7. 4– #12, 1– #12 GND, 1"C HDPE
8. 12– #14, 1– #14 GND, 1"C RGS

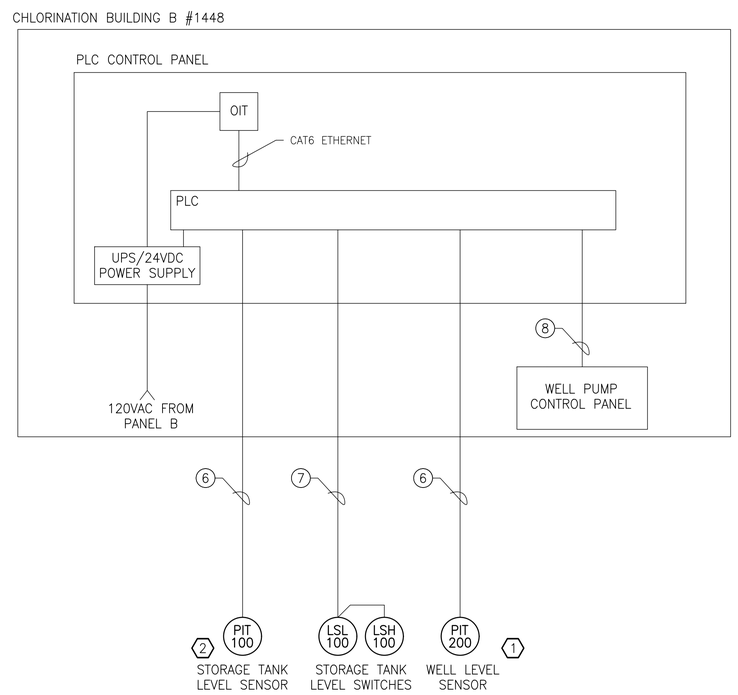

CONTROL ONE-LINE DIAGRAM

Mark	REVISION	Date	Initial

DESIGNED: NELSON ENGINEERING
D. PHAN
TECH. REVIEW: T. MOORE
DATE: 11/24/2025

SUB SHEET NO. E8

CONSTRUCTION DOCUMENTS

TITLE OF SHEET
ELECTRICAL ONE-LINE DIAGRAM AND SCHEDULES

GLACIER NATIONAL PARK
REHABILITATE POLEBRIDGE WATER SYSTEM

DRAWING NO. 117
197288
PMIS/PKG NO. 329234B
SHEET 34 OF 35

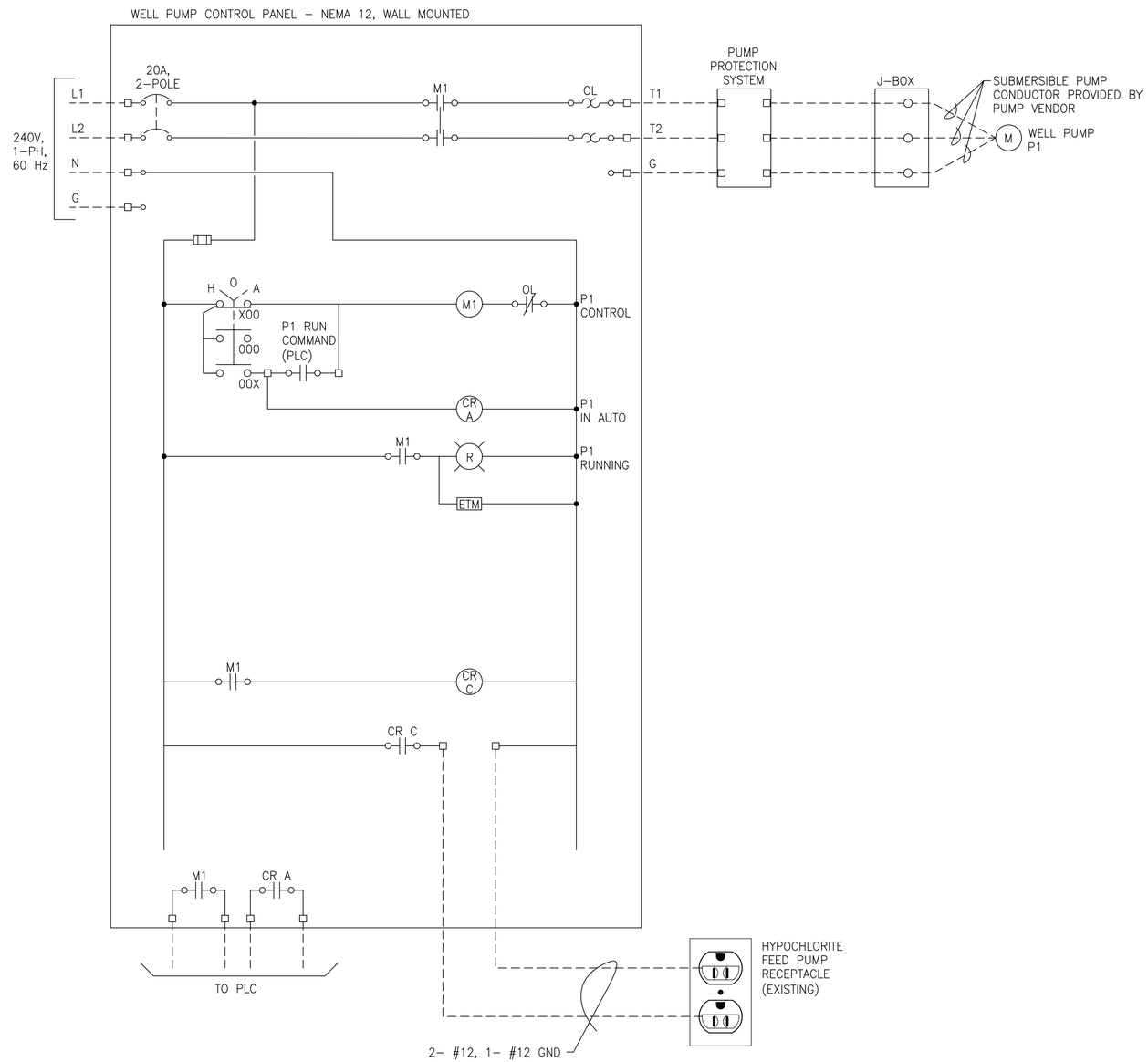

WELL PUMP MOTOR CONTROL SCHEMATIC

Mark	REVISION	Date	Initial

DESIGNED: NELSON ENGINEERING
CADD D. PHAN
TECH. REVIEW: T. MOORE
DATE: 11/24/2025

SUB SHEET NO. E9

CONSTRUCTION DOCUMENTS

TITLE OF SHEET
WELL PUMP
MOTOR CONTROL SCHEMATIC

GLACIER NATIONAL PARK
REHABILITATE POLEBRIDGE WATER SYSTEM

DRAWING NO. 117
197288
PMIS/PKG NO. 329234B
SHEET 35 OF 35