USCGC ROBERT G. WARD (WPC 1130)

SPECIFICATION FOR DRYDOCK REPAIRS

FY2027

Developed By: Patrick J Carr

(Rev-0, 30 April 2026)

TABLE OF CONTENTS

Revisions Record iii
Consolidated List of References iv
Consolidated List of Government-furnished Property x
Consolidated List of Critical Inspection Items xiii
Principal Characteristics xiv
General Requirements 1
WORK ITEM 1: Topside Exterior Structure, Repair 15
WORK ITEM 2: Hull Plating, Inspect 18
WORK ITEM 3: Tanks and Voids, Inspect and Preserve 24
WORK ITEM 4: Watertight Closures, Assess 30
WORK ITEM 5: Louver and Damper Assembly, Inspect and Repair 33
WORK ITEM 6: P-100 Fire Pump, Relocation 36
WORK ITEM 7: Propulsion Shafting System, Inspect and Repair 40
WORK ITEM 8: ASW/Firemain System Components, Renew/Overhaul 52
WORK ITEM 9: Electrical Power Distribution System, Thermographic Inspection (450 VAC And Below) 59
WORK ITEM 10: Bilge Surface, Clean, Inspect and Preserve 65
WORK ITEM 11: Machinery Ventilation System, Clean and Preserve 68
WORK ITEM 12: HVAC Duct System, Clean 71
WORK ITEM 13: Condensers, C1 and C2, Renew 74
WORK ITEM 14: Rudder Assemblies, Inspect and Repair 79
WORK ITEM 15: Stabilizing Fins, Inspect and Repair 83
WORK ITEM 16: Bow Thruster Propeller and Tunnel, Inspect and Repair 87
WORK ITEM 17: Stern Launch Door, Inspect and Preserve 90
WORK ITEM 18: Sewage and Grey Water System, Clean and Inspect 94
WORK ITEM 19: Freeboard, Preserve 100
WORK ITEM 20: Weatherdecks, Preserve 106
WORK ITEM 21: U/W Body, Preserve 113
WORK ITEM 22: Impressed Current Cathodic Protection (ICCP) and Anti-Fouling System, Inspect and Maintain 121
WORK ITEM 23: Interior Deck Coverings, Reseal 126
WORK ITEM 24: Drydocking 130
WORK ITEM 25: Temporary Services, Provide - Cutter 134
WORK ITEM 26: Sea Trial Performance, Support, Provide 137

REVISIONS RECORD

This page is used to record specification revisions, which may have occurred subsequent to a Revision 0 (Rev-0) package. Information listed is intended to provide contractors and field unit personnel a means to ensure all the current specification revision pages are present when reviewing or utilizing this specification package.

DATE	REV#	WORK ITEM#	CHANGES MADE

NOTE : All work item and paragraph numbers listed above for a given revision correspond to same numbers in the previous revision. This revised specification is self-contained with all of the above listed changes incorporated.

CONSOLIDATED LIST OF REFERENCES

The below-listed documents form a part of this specification to the extent specified herein. Approval/publication dates or revision dates/numbers are also identified, to ensure that same document versions are used at the time of specification writing and during contract execution.

All Coast guard drawings, technical publications, and standard specifications will be provided to contractors by the Coast Guard at an appropriate time, or upon request, free of charge. Other Government documents may be accessed – free of charge – from links located on the SFLC website. Commercial sites provide access to their respective documents.

COAST GUARD DRAWINGS

Coast Guard Drawing 154 WPC 079-900, Rev D, Stability and Loading Data Booklet
Coast Guard Drawing 154 WPC 079-902, Rev -, Curves of Form Hydrostatic Analysis
Coast Guard Drawing 154 WPC 085-301, Rev B, Hull Lines and Offsets
Coast Guard Drawing 154 WPC 111-301, Rev B, Shell Expansion
Coast Guard Drawing 154 WPC 127-302, Rev C, Potable Water & Sewage Tank Fabrication Details
Coast Guard Drawing 154 WPC 131-301, Rev D, Scantlings Main Deck
Coast Guard Drawing 154 WPC 151-301, Rev E, Scantlings - Superstructure
Coast Guard Drawing 154 WPC 161-301, Rev C, Skegs and Stern Tubes Support Structures
Coast Guard Drawing 154 WPC 163-201, Rev C, Sea Chest A&D
Coast Guard Drawing 154 WPC 167-201, Rev F, Schedule of Doors, Manholes and Hatches
Coast Guard Drawing 154 WPC 167-201, Rev F, Schedule of Doors, Manholes, and Hatches
Coast Guard Drawing 154 WPC 168-201, Rev F, Louvers and Covers A&D
Coast Guard Drawing 154 WPC 169-201, Rev C, Structural Closure Stern Gate
Coast Guard Drawing 154 WPC 171-201, Rev D, Mast A&D
Coast Guard Drawing 154 WPC 171-601, Rev D, Mast Prefab
Coast Guard Drawing 154 WPC 204-301, Rev F, Equipment Removal Plan
Coast Guard Drawing 154 WPC 243-201, Rev D, Main Propulsion Shafting A&D
Coast Guard Drawing 154 WPC 245-304, Rev B, Propeller Plans and Data Six Blade Propeller
Coast Guard Drawing 154 WPC 245-901, Rev -, Propeller CAD Model to Support CMM Scan (IGS File)
Coast Guard Drawing 154 WPC 251-301, Rev D, Combustion Air Diagram
Coast Guard Drawing 154 WPC 256-201, Rev C, Main Propulsion Cooling System Arrangement
Coast Guard Drawing 154 WPC 256-301, Rev D, Main and Auxiliary Cooling System Diagram
Coast Guard Drawing 154 WPC 261-201, Rev B, Fuel Oil Service System Arrangement
Coast Guard Drawing 154 WPC 320-301, Rev E, 450V System Deck Plan
Coast Guard Drawing 154 WPC 330-301, Rev G, 120V System Deck Plan
Coast Guard Drawing 154 WPC 405-201, Rev D, Antenna A&D
Coast Guard Drawing 154 WPC 405-202, Rev A, Antenna Arrangement and Installation
Coast Guard Drawing 154 WPC 406-301, Rev G, Schedule of Bonding and Grounding
Coast Guard Drawing 154 WPC 422-301, Rev F, Electrical Navigational Aids

Coast Guard Drawing 154 WPC 506-201, Rev A, Fills Vents, Sounds, and Overflows
Coast Guard Drawing 154 WPC 506-301, Rev -, Fills, Vents, Sounds, Overflows Diagram
Coast Guard Drawing 154 WPC 512-201, Rev -, HVAC Arrangement
Coast Guard Drawing 154 WPC 512-301, Rev B, HVAC System Diagram
Coast Guard Drawing 154 WPC 512-305, Rev -, HVAC Equipment List
Coast Guard Drawing 154 WPC 513-201, Rev B, Machinery Ventilation Arrangement
Coast Guard Drawing 154 WPC 513-301, Rev C, Machinery Ventilation Diagram
Coast Guard Drawing 154 WPC 521-301, Rev C, Firemain System and Magazine Sprinkler Diagram
Coast Guard Drawing 154 WPC 524-201, Rev D, Auxiliary Cooling System Arrangement
Coast Guard Drawing 154 WPC 528-301, Rev B, Grey Water System Diagram
Coast Guard Drawing 154 WPC 529-301, Rev -, Bilge System Diagram
Coast Guard Drawing 154 WPC 533-201, Rev C, Potable Water System Arrangement
Coast Guard Drawing 154 WPC 533-301, Rev H, Potable Water System Diagram
Coast Guard Drawing 154 WPC 541-201, Rev D, Fuel Oil Transfer System Arrangement
Coast Guard Drawing 154 WPC 541-301, Rev D, Fuel Oil Service and Transfer System
Coast Guard Drawing 154 WPC 551-301, Rev C, Compressed Air System Diagram
Coast Guard Drawing 154 WPC 556-202, Rev D, Fin Stabilizer Hydraulic System A&D
Coast Guard Drawing 154 WPC 556-302, Rev C, Fin Stabilizer Hydraulic System Diagram
Coast Guard Drawing 154 WPC 561-202, Rev C, Steering Arrangement & Details
Coast Guard Drawing 154 WPC 562-201, Rev A, Rudder Details
Coast Guard Drawing 154 WPC 562-202, Rev C, Rudder Arrangement & Details
Coast Guard Drawing 154 WPC 565-201, Rev -, Fin Stabilizer System A&D
Coast Guard Drawing 154 WPC 565-301, Rev A, Fin Stabilizer Control System
Coast Guard Drawing 154 WPC 565-302, Rev C, Fin Stabilizer Control System COED
Coast Guard Drawing 154 WPC 568-201, Rev B, Bow Thruster System A&D
Coast Guard Drawing 154 WPC 593-201, Rev F, Sewage System Arrangement
Coast Guard Drawing 154 WPC 593-202, Rev C, Oily Bilge System Arrangement
Coast Guard Drawing 154 WPC 593-301, Rev C, Sewage System Diagram
Coast Guard Drawing 154 WPC 593-302, Rev A, Oily Bilge System Diagram
Coast Guard Drawing 154 WPC 593-303, Rev A, Sewage Control System
Coast Guard Drawing 154 WPC 601-302, Rev D, General Arrangement
Coast Guard Drawing 154 WPC 602-305, Rev D, Visual Identification and Draft Marks Plan
Coast Guard Drawing 154 WPC 612-201, Rev D, Lifelines, Liferails & Stanchions
Coast Guard Drawing 154 WPC 613-201, Rev E, Rigging & Covers A&D
Coast Guard Drawing 154 WPC 623-301, Rev A, Ladder Arrangement
Coast Guard Drawing 154 WPC 633-301, Rev C, Cathodic Protection System
Coast Guard Drawing 154 WPC 634-301 Rev B, Deck Covering Schedule
Coast Guard Drawing 154 WPC 634-301, Rev B, Deck Covering Schedule
Coast Guard Drawing 154 WPC 635-201, Rev D, Thermal and Acoustical Insulation
Coast Guard Drawing 154 WPC 997-002, Rev B, Alternate Docking Plan 620 MT Mobile Lift
Coast Guard Drawing 154 WPC 997-004, Rev A, Steel Block Towers for Alternate Docking Plan

Coast Guard Drawing 154 WPC 997-302, Rev -, Docking Plan (Supersedes DWGS 154-WPC-997-1, 997-301)
Coast Guard Drawing 154 WPC 997-303, Rev -, Alternate Docking Plan 500 Ton Mobile Boat Lift
Coast Guard Drawing 154 WPC 997-304, Rev -, Alternate Docking Plan 820 MT Mobile Boat Lift
Coast Guard Drawing 154B WPC 111-301, Rev A, Shell Expansion
Coast Guard Drawing 154B WPC 131-301, Rev B, Scantlings Main Deck
Coast Guard Drawing 154B WPC 161-301, Rev -, Skegs and Stern Tubes Support Structures
Coast Guard Drawing 154B WPC 167-201, Rev -, Schedule of Doors, Manholes, and Hatches
Coast Guard Drawing 154B WPC 169-201, Rev -, Structural Closure Stern Gate
Coast Guard Drawing 154B WPC 171-201, Rev A, Mast A&D
Coast Guard Drawing 154B WPC 180-260, Rev -, Foundation A&D Module 60
Coast Guard Drawing 154B WPC 204-301, Rev -, Equipment Removal Plan
Coast Guard Drawing 154B WPC 204-301, Rev -, Equipment Removal Plans
Coast Guard Drawing 154B WPC 243-201, Rev A, Main Propulsion Shafting A&D
Coast Guard Drawing 154B WPC 245-301, Rev -, Propeller Plans and Data Six Blade Propeller
Coast Guard Drawing 154B WPC 251-301, Rev -, Combustion Air Diagram
Coast Guard Drawing 154B WPC 256-201, Rev -, Main Propulsion Cooling System Arrangement
Coast Guard Drawing 154B WPC 256-301, Rev -, Main and Auxiliary Cooling System Diagram
Coast Guard Drawing 154B WPC 320-301, Rev -, 450V System Deck Plan
Coast Guard Drawing 154B WPC 330-301, Rev B, 120V System Deck Plan
Coast Guard Drawing 154B WPC 405-201, Rev -, Antenna A&D
Coast Guard Drawing 154B WPC 405-202, Rev -, Antenna Arrangement and Installation
Coast Guard Drawing 154B WPC 406-301, Rev C, Schedule of Bonding and Grounding
Coast Guard Drawing 154B WPC 422-301, Rev -, Electrical Navigational Aids
Coast Guard Drawing 154B WPC 506-201, Rev A, Fills Vents, Sounds, and Overflows
Coast Guard Drawing 154B WPC 506-201, Rev A, Fills, Vents, Sounds, Overflows Arrangement
Coast Guard Drawing 154B WPC 512-201, Rev A, HVAC Arrangement
Coast Guard Drawing 154B WPC 512-301, Rev -, HVAC System Diagram
Coast Guard Drawing 154B WPC 512-301, Rev -, HVAC System Diagram
Coast Guard Drawing 154B WPC 512-305, Rev -, HVAC Equipment List
Coast Guard Drawing 154B WPC 513-201, Rev B, Machinery Ventilation Arrangement
Coast Guard Drawing 154B WPC 513-301, Rev -, Machinery Ventilation Diagram
Coast Guard Drawing 154B WPC 516-201, Rev -, HVAC Refrigerant Piping A&D
Coast Guard Drawing 154B WPC 516-301, Rev -, HVAC Refrigerant Piping Diagram
Coast Guard Drawing 154B WPC 521-301, Rev -, Firemain System and Magazine Sprinkler Diagram
Coast Guard Drawing 154B WPC 533-201, Rev -, Potable Water System Arrangement
Coast Guard Drawing 154B WPC 541-201, Rev B, Fuel Oil Transfer System Arrangement
Coast Guard Drawing 154B WPC 556-202, Rev -, Fin Stabilizer Hydraulic System A&D
Coast Guard Drawing 154B WPC 562-201, Rev -, Rudder Details
Coast Guard Drawing 154B WPC 562-202, Rev -, Rudder Arrangement & Details
Coast Guard Drawing 154B WPC 565-301, Rev -, Fin Stabilizer Control System
Coast Guard Drawing 154B WPC 565-302, Rev -, Fin Stabilizer Control System COED

Coast Guard Drawing 154B WPC 568-201, Rev -, Bow Thruster System A&D

Coast Guard Drawing 154B WPC 593-201, Rev A, Sewage System Arrangement

Coast Guard Drawing 154B WPC 593-202, Rev -, Oily Bilge System Arrangement

Coast Guard Drawing 154B WPC 593-301, Rev -, Sewage System Diagram

Coast Guard Drawing 154B WPC 601-302, Rev -, General Arrangement

Coast Guard Drawing 154B WPC 601-302, Rev B, General Arrangement

Coast Guard Drawing 154B WPC 602-305, Rev B, Visual Identification and Draft Marks Plan

Coast Guard Drawing 154-WPC 529-301, Rev -, Bilge System Diagram

Coast Guard Drawing 154-WPC 593-301, Rev C, Sewage System Diagram

Coast Guard Drawing 154-WPC-528-301, Rev B, Grey Water System Diagram

If your particular vessel doesn't have these either submit a CSMP (the work to add them will be written into this work item by SES) or have the KTR install via CR (in conjunction with the inspection/CFR requested in 3.1.8 below).

Vessels have been delivered w/out the main deck cement epoxy fairings shown on SECTION/PLAN 39 A/C on 634-301.

COAST GUARD PUBLICATIONS

Coast Guard Commandant Instruction (COMDTINST) M10360.3, Jun 2006, Coatings and Colors Manual

Coast Guard Technical Publication (TP) 8000, SWBS 256, Apr 2015, Main Engine Seawater Strainer, 10 Inch Duplex Basket Strainer

Coast Guard Technical Publication (TP) 8001B, SWBS 633, Sep 2018, Cathodic Protection System – Model CA44227

Coast Guard Technical Publication (TP) 8010B, SWBS 565, May 2019, Fin Stabilizer System – Model QC-1500 with MPU20 Hydraulic System

Coast Guard Technical Publication (TP) 8081A, SWBS 243, Apr 2018, Stern Tube Seal with Emergency Packing Gland

Coast Guard Technical Publication (TP) 8096B, SWBS 252, Aug 2018, Bowthruster – Model 60 LK with Operator Panel and Motor Drive – Installation, Service, and Operation Manual

Coast Guard Technical Publication (TP) 8123, SEP 2019, Preliminary - Heating, Ventilation, and Air Conditioning System - Frc-514-P1

Coast Guard Technical Publication (TP) 8153A, SWBS 562, Apr 2019, Rudderstock Seal Assembly, Type EL + IS, Model H 78525-01

Coast Guard Technical Publication (TP) 8911B, SWBS 086, Apr 2020, Technical Repair Standard for Use on FRC - Fin Stabilizer System Model QC-1500

Coast Guard Technical Publication (TP) 8913A, SWBS 086, Mar 2020, Technical Repair Standard for Propellers

Coast Guard Technical Publication (TP) 8916, SWBS 086, 28 JUL 2020, TECHNICAL REPAIR STANDARD FOR USE ON FRC - FLOW ADAPTIVE RUDDER AND EL + IS RUDDERSTOCK SEAL MODEL - H 78525-01 (HULLS 1118, 1139 AND ON) 154' WPC (A) AND (B) CLASS CUTTERS

Coast Guard Technical Publications (TP) 6632, SWBS 6633, Jul 2015, Reduction Gear – Model ZF 280-1

Fire Prevention and Response

Surface Forces Logistics Center Standard Specification 0000 (SFLC Std Spec 0000), 2022, General Requirements

Surface Forces Logistics Center Standard Specification 0000 (SFLC Std Spec 0000), Latest Version, General Requirements

Surface Forces Logistics Center Standard Specification 0740 (SFLC Std Spec 0740), 2022, Welding and Allied Processes

Surface Forces Logistics Center Standard Specification 0740 (SFLC Std Spec 0740), Latest Version, Welding and Allied Processes

Surface Forces Logistics Center Standard Specification 3020 (SFLC Std Spec 3020), 2022, Overhaul AC Electrical Motors

Surface Forces Logistics Center Standard Specification 3041 (SFLC Std Spec 3041), 2022, Shipboard Electrical Cable Test

Surface Forces Logistics Center Standard Specification 3042 (SFLC Std Spec 3042), 2022, Shipboard Electrical Cable Removal, Relocation, Splice, Repair, and Installation

Surface Forces Logistics Center Standard Specification 5000 (SFLC Std Spec 5000), 2022, Auxiliary Machine Systems

Surface Forces Logistics Center Standard Specification 5100 (SFLC Std Spec 5100), 2022, Clean Shipboard Ventilation Systems

Surface Forces Logistics Center Standard Specification 5550 (SFLC Std Spec 5550), Latest Version,

Surface Forces Logistics Center Standard Specification 6310 (SFLC Std Spec 6310), 2022, Requirements for Preservation of Ship Structures

Surface Forces Logistics Center Standard Specification 6310 (SFLC Std Spec 6310), Latest Version, Requirements for Preservation of Ship Structures

Surface Forces Logistics Center Standard Specification 6341 (SFLC Std Spec 6341), 2022, Install Interior Deck Covering Systems

Surface Forces Logistics Center Standard Specification 8634 (SFLC Std Spec 8634), 2022, Drydocking

Surface Forces Logistics Center Standard Specification 8635 (SFLC Std Spec 8635), 2022, Temporary Services

Surface Forces Logistics Center Standard Specification 8636 (SFLC Std Spec 8636), 2022, Temporary Hull Accesses

OTHER REFERENCES

American Bureau of Shipbuilding (ABS) Rules for Survey After Construction, Part 7

American Society for Nondestructive Testing, SNT-TC-1A: Personnel Qualification and Certification in Nondestructive Testing, 2016

American Society of Mechanical Engineers (ASME) B16.34, 2004, Valves-Flanged, Threaded, and Welding End

ASTM International (ASTM) D1330, 2010, Standard Specification for Rubber Sheet Gaskets

ASTM International (ASTM) D5363, 2008; Standard Specification for Anaerobic Single-Component Adhesives (An)

ASTM International (ASTM) F992, 2006, Standard Specification for Valve Label Plates

Coast Guard Maintenance Procedure Card (MPC) B10017.D, CONVERSION B/T ANODE BOLT (1 Time, 01-32)

Code of Federal Regulations (CFR) Title 29, Part 1915, Occupational Safety and Health Standards for Shipyard Employment

Commercial Item Descriptions (CID) A-A-59316, Nov 2003; Abrasive Materials for Blasting

DOD-STD-2003, Dec 1990, Electric Plant Installations, Standard Methods for Surface Ships and Submarines (Cable), Figures 1B5, 3B19, 3B20, 3B21

Federal Specification (Fed Spec) DDD-C-95, Mar 1972, Carpets and Rugs, Wool, Nylon, Acrylic, Modacrylic

Federal Standard (FED-STD) 595, 2008, Colors Used In Government Procurement

Manufacturers Standardization Society of the Valve and Fittings Industry (MSS) SP-61, 2003 Edition, Pressure Testing Of Steel Valves

Manufacturers Standardization Society of the Valve and Fittings Industry (MSS) SP-67, 2002 Edition, Butterfly Valves

Manufacturers Standardization Society of the Valve and Fittings Industry (MSS) SP-72, 1999 Edition, Ball Valves with Flanged or Butt-Welding Ends for General Service

Manufacturers' Standardization Society of the Valve and Fittings Industry (MSS) SP-80, 2008 Edition, Bronze Gate, Globe, Angle and Check Valves

MIL-C-16173, Jan 1993, Corrosive Preventative Compound, Solvent Cutback, Cold Application

MIL-DTL-1222, Dec 2000, Studs, Bolts, Screws and Nuts for Applications Where a High Degree of Reliability Is Required

MIL-PRF-16173, Sep 2006, Corrosion Prevention Compound, Solvent Cut-Back, Cold-Application

MIL-PRF-24635, 2009, Coating Systems, Weather-Resistant, Exterior Use

MIL-PRF-24667, Jun 2005, Coating system, Non-Skid, for Roll or Spray Application

MIL-S-45180, 1998; Sealing Compound, Gasket, Hydrocarbon Fluid and Water Resistant

NAVSEA Technical Publication T9074-AD-GIB-010/1688, (TP 1688), July 2012, Requirements for Fabrication, Welding, and Inspection of Submarine Structure

QPL-24667, May 2006, Qualified Product List of Products Qualified under Performance Specification MIL-PRF-24667, Coating system, Non-Skid, for Roll or Spray Application

Society of Automotive Engineers (SAE) Aerospace Material Specification (AMS) C6183, 2013, Cork and Rubber Composition Sheet; For Aromatic Fuel and Oil Resistant Gaskets

Society of Automotive Engineers (SAE) Aerospace Material Specification (AMS) G-6032, 2014 Grease, Plug Valve, Gasoline and Oil Resistant, NATO Code Number G-363, Metric

The Society for Protective Coatings (SSPC) Surface Preparation Specification No.1 (SSPC-SP 1), 2015, Solvent Cleaning

The Society for Protective Coatings (SSPC)/NACE International (NACE No.2 2004, Near White Blast Cleaning)

CONSOLIDATED LIST OF GOVERNMENT-FURNISHED PROPERTY

The following is a list of property, which the Government will furnish. This list supersedes any other material obligations indicated or implied by referenced drawings.

WORK ITEM	MTI	ITEM DESCRIPTION	NSN/PN	QTY	ESTIMATED COST ($/UNIT)
7	Y	**Propeller Shaft	NSN: 2010-01-605-7516	2 ea.	103,000
7	Y	**LH Propeller	NSN: 2010-01-628-0276 PN: 531915	1 ea.	190,000
7	Y	**RH Propeller	NSN: 2010-01-627-9761 531914	1 ea.	190,000
7	N	**Stave Kit (each kit contains 8 reg. Romor staves, 2 rubber locking staves, 2 Romor staves w/keeper slot)	NSN: 3120-01-605-7400 P/N: 80920203000003	4 kt	2430
7	N	**FWD Bearing Split External Retaining Ring Kit (each kit contains 1ea retaining ring, 10ea socket head cap screws)	NSN: 3120-01-605-7345 P/N: 80920203000004	2 kt	1970
7	N	**AFT Bearing Split External Retaining Ring Kit (each kit contains 1ea retaining ring, 10ea socket head cap screws)	NSN: 3120-01-605-7510 P/N: 80920203000005	2 kt	2575
7	N	**Kit, Installation Part-Replacement (see note 4.1 for kit contents)	NSN: 2010-01-629-4693 P/N: 950700	2 kt	1900
7	Y	*Kit, Propeller â€“ Removal/Installation Tools and Equipment (see note 4.2 for kit contents)	NSN: 2010-01-632-2198/ P/N: 999120	1 kt	22,970
7	N	**Shaft Seal Overhaul Kit (see table 7-4 of TP-8081, pg 7-8, Service Kit B)	NSN:5330-01-618-5248 P/N: H76214-6	2 kt	5650.93
7	N	**Shaft Seal Overhaul Kit (see table 7-5 of TP-8081, pg 7-9, Service Kit C)	NSN: 5330-01-618-5276 P/N: H76214-8	2 kt	4896
7	N	Anodes, Zinc (stern tube)	NIIN: 01-644-5483 P/N: Z0020202H3	16 ea.	50
7	N	NUT, SELF LOCKING (shaft to gear box coupling hub)	NIIN: 01-722-2196 P/N: 10493101	40 ea	10.76
7	N	BOLT, MACHINE	NIIN: 01-722-2178 P/N:	40 -ea	35,99

		(shaft to gear box coupling hub)	10492895		
13	NÂ	STBD C1 Condenser	NSN: 152078873	1 ea.	18,378.25
13	N	PORT C2 Condenser	NSN: 152078874	1 ea.	13,107.29
14	Y	**Port Rudder	NSN: 2040-01-690-5509	1 ea.	30,000
14	Y	**Stbd Rudder	NSN: 2040-01-690-5507	1 ea.	30,000
14	N	Shaft Seal Overhaul Kit (Service Kit A from TP-8153, pg 7-5, Table 7-2)	NSN: 5330-01-595-4647 PN: H785252-01-6	2 kt	9722.00
14	N	Shaft Seal Overhaul Kit (Service Kit B from TP-8153, pg 7-5, Table 7-3)	NSN: 5330- 01-596-7760 PN: H78525-01-7	2 kt	6,170.00
14	N	Locknut PC5 154WPC 562-002	NSN: 5310-33-201-6431 PN: KM32	4 ea.	100.00
14	N	Lock Washer PC6 154WPC 562-002	NSN: 5310-33-201-5247 PN: MB 32	2 ea.	150.00
14	N	Upper Roller Bearing PC7 154WPC 562-002	NSN: 3110-01-597-3537 PN: 23032 CC/C2W33	2 ea.	502.11
14	N	Oil Seal PC8 154WPC 562-002	NSN: 5330-01-618-5091 PN: CR70028 CRWH1R	2 ea.	60.00
14	N	Lower Bearing PC9 154WPC 562-002	NSN: 3120-01-631-4104	2 ea.	1,162.00
15	Y	**Fin Blade	NSN: 2040-01-598-8181 PN: 601-15-020S02-00-00-A	2 ea.	22,254.38
15	N	**Hydraulic Cylinder	NSN: 9999-01-682-3497 PN: 304-07-070040-00-01-ABS_C	4 ea.	5,723.55
15	YÂ	**Shaft, ShoulderedÂ	NSN: 3040-01-659-0358Â PN: 601-15-S00001-00-05_FÂ	2 ea.Â	12,076.58Â
16	N	**Set of bevel gears 19:28, Mfr: Schottel	NSN: 3020-01-618-1133 PN: 1088301	1st.	10,378.13
16	Y	**Propeller, Mfr: Schottel	NSN: PN: 1161329	1ea.	20,000.00
18	N	**Sewage Tank Zinc Anode	NIIN: 014474686	2	142.19
21	Y	**Depth Sounder Transducer	NSN: 5845-01-586-7921, P/N: SS164-20-10-F	1 ea.	$10,000.00
21	Y	**Speed log transducer	NSN: 6605-99-839-3629	1 ea.	$10,000.00
21	N	Parts Kit, Gate Valve (Doppler Speed Log)	NSN: 4820-99-374-5925 P/N: 81702-0410-00	1 ea.	$1,000.00
21	N	Zinc Anodes	NIN: 01-647-6179 P/N: GA-4	4 ea.	$50.00
22	N	**Anode, Corrosion, Elliptical	NSN: 5340-99-400-2561 PN: PPEC1202-MM50	2 ea.	1,900.00
22	N	**Silver/Silver Chloride Reference Electrode Cell	NSN: 6630-99-553-5405 PN: PPR100019	2 ea.	1,625.00
22	N	Copper Anode, Anti-Fouling	NSN: 5342-99-133-5325 PN: PAAZRRY037FT	3 ea.	436.69

***Government-loaned property, which shall be returned to the vessel upon completion of the availability.**
****New or refurbished equipment that the Government may provide for installation in place of existing equipment.**
*****Government-furnished property, which is to be supplied by either the vessel or the C4IT ServiceCenter**

CONSOLIDATED LIST OF CRITICAL INSPECTION ITEMS

The following is a list of work items, which contain Critical Inspection reports, which the Contractor must complete within the first 25% of the availability contract period (see SFLC Std Spec 0000, paragraph 3.2.6.5 (Inspection report particulars)):

Work Item	Title
2	Hull Plating, Inspect
3	Tanks and Voids, Inspect and Preserve
5	Louver and Damper Assembly, Inspect and Repair
7	Propulsion Shafting System, Inspect and Repair
8	ASW/Firemain System Components, Renew/Overhaul
10	Bilge Surface, Clean, Inspect and Preserve
14	Rudder Assemblies, Inspect and Repair
15	Stabilizing Fins, Inspect and Repair
16	Bow Thruster Propeller and Tunnel, Inspect and Repair
17	Stern Launch Door, Inspect and Preserve
18	Sewage and Grey Water System, Clean and Inspect
19	Freeboard, Preserve
20	Weatherdecks, Preserve
21	U/W Body, Preserve
22	Impressed Current Cathodic Protection (ICCP) and Anti-Fouling System, Inspect and Maintain
26	Sea Trial Performance, Support, Provide

PRINCIPAL CHARACTERISTICS

154' WPC (SENTINEL CLASS)	
PHYSICAL	
Anchor	ROCNA, anchor, 150 KG/ 331 LB, Stainless Steel
Bulkheads	(7), Watertight Bulkheads located below the Main Deck
Displacement, delivery, light ship	302 Metric Tons
Draft, full load	2.58 Meters (8.46 Feet)
End of service life displacement	353 Metric Tons
Framing	Longitudinal
Full load displacement	353 Metric Tons
Height of highest projection	17.22 Meters (56.5 Feet)
Length overall (loa)	46.80 Meters (153.5 Feet)
Maximum beam	7.75 Meters (25.43 Feet)
Minimum operating displacement	314 Metric Tons
Waterline length (lwl)	44.35 Meters (145.5 Feet)
HULL	
Hull/main weatherdeck material	AH-36 Steel
Superstructure	5456-H1111 Aluminum
MACHINERY	
Bow thruster	Schottel STT 60 LK
Diameter of propeller	1900 mm
Emergency service generator (edg)	Cummins 6BTA5.9-DM Diesel with Stanford 93KW Generator
Fin stabilizer	(2), Quantum QC1500
Main propulsion	(2), MTU 20V4000 M93L, Sequential Turbo-Charged Diesels
Number of blades	6
Number of propellers	(2) Michigan Wheel Marine
Propeller pitch capability	Fixed
Propulsion shafts	(2), Electralloy Nitronic 50HS (9430mm) Shafts
Reduction gears	(2), ZF 23560C/D Series
Rudders	(2), 316L Stainless Steel
Shaft rotations per minute	478
Shaft(s) bearing, aft	(2), Duramax Bearings
Shaft(s) bearing, intermediate	(2), Duramax Bearings
Shaft(s) diameter	8 Inches
Shaft(s) Seal	(2), Wartsila Mechanical Seals
Ship service generators	(2), Cummins QSM11-DM Diesels with Stanford 317KW Generator
TANK CAPACITIES AT 95% LIQUID LOAD (22,958 TOTAL GALLONS)	
Fresh water tank, port (3-38-2-w)	708 gal
Fresh water tank, stbd (3-38-1-w)	756 gal
Fuel oil edg day tank (1-10-1-f)	134 gal
Fuel oil gen. ovrflw tnk, ctr. (3-40-0-f)	1,159 gal
Fuel oil overflow tank, center (3-10-0-f)	616 gal
Fuel oil service tank, #1 port (3-17-2-f)	1,750 gal
Fuel oil service tank, #1 stbd (3-17-1-f)	1,750 gal
Fuel oil service tank, #2 port (3-40-2-f)	890 gal
Fuel oil service tank, #2 stbd (3-40-1-f)	890 gal
Fuel oil storage tank, #1 center (3-11-0-	5,040 gal

f)	
Fuel oil storage tank, #2 center (3-23-0-f)	5,350 gal
TANK CAPACITIES AT 95% LIQUID LOAD (22,958 TOTAL GALLONS)	
Grey water tank, (3-17-0-w)	2,668 gal.
Lube oil storage tank, (2-35-2-f)	146 gal.
Oily water tank, (3-34-1-w)	336 gal.
Sewage collection tank, (3-6-0-w)	429 gal.
Waste oil tank, (3-34-2-f)	336 gal.

General Requirements

1. SCOPE

1.1 Intent. This standard specification invokes general requirements for conducting vessel repairs performed at a commercial contractor's facility for Coast Guard vessels.

1.2 Term interchangeability. The terms 'Contractor', 'CG Yard', 'NAVSTA EVERETT', 'shipyard', 'Base', and 'Coast Guard Industrial' are used interchangeably in this specification. Where the primary service provider is Coast Guard personnel, references to contractor and other noted descriptors within this specification or within drawings, publications, SFLC Standard Specifications or other commercial and military references are deemed the same as prime service provider.

2. REFERENCES

COAST GUARD DRAWINGS

None

COAST GUARD PUBLICATIONS

Coast Guard Commandant Instruction (COMDTINST) M10360.3 (series), Coatings and Color Manual

Surface Forces Logistics Center Standard Specification 0000 (SFLC Std Spec 0000), Latest Version, General Requirements

Surface Forces Logistics Center Standard Specification 0740 (SFLC Std Spec 0740), Latest Version, Welding and Allied Processes

Surface Forces Logistics Center Standard Specification 5550 (SFLC Std Spec 5550), Latest Version,

Fire Prevention and Response

Surface Forces Logistics Center Standard Specification 6310 (SFLC Std Spec 6310), Latest Version, Requirements for Preservation of Ship Structures

OTHER REFERENCES

Code of Federal Regulations (CFR) Title 29, Part 1915, Occupational Safety and Health Standards for Shipyard Employment

NAVSEA Technical Publication T9074-AD-GIB-010/1688, (TP 1688), July 2012, Requirements for Fabrication, Welding, and Inspection of Submarine Structure

3. REQUIREMENTS

3.1 General. The Contractor must conform to all requirements specified in SFLC Std Spec 0000 and in this item, as applicable, during the performance of this availability. The requirements in this WI applies to all work under the scope of this contract, whether explicitly stated in all following work items or not, and to all other work subsequently authorized by changes, modifications, or extensions to the contract.

3.1.1 The Contractor must conform to all requirements specified in SFLC Std Spec 5550 and in the Fire Protection and Response work item, as applicable, during the performance of this availability.

3.1.1.1 Fire Safety Plan submission. The Contractor must submit a copy of the CFR 1915, Subpart P, Fire Safety Plan with the Contractor's bid when work will be conducted in a Contractor–owned facility. Include any MOA(s) with local firefighting facilities.

3.1.1.2 Fire Plan submission. The Contractor must submit a copy of the developed availability specific fire plan as requested in the Fire Protection and Response work item, with the Contractor's bid.

NOTE

NAVSEA drawings listed will be available FOR INSPECTION ONLY from the Coast Guard Port Engineer post-award. SFLC will not redistribute NAVSEA documents. Contractors can apply to NAVSEA headquarters directly for copies.

3.1.1.3 SFLC-PBPL Availabilities (87 WPB, 110 WPB, & 154 WPC). The Contractor must conform to SFLC Std Spec 5550 with the following amendments and supplements:

• For contracts executed at a Contractor's facility, submit (pre-award) the facility's Fire Safety Plan document described in 29 CFR 1915.502 – "Fire Safety Plan". For planning assume that Coast Guard personnel will not be available to fight a fire.

• For all contracts at all facilities, submit the following information pre-award, taking into consideration how the maintenance/repairs specified in the work items will affect uninterrupted operation of the subject systems; make all necessary amendments to this submission after discussions with the COR at the arrival conference and during contract execution as emerging conditions warrant: o Describe all anticipated needs for fire detection/alarm, fire-fighting, and shipboard lighting and communication systems supplementation (see bulleted paragraphs below) and a description of the proposed remedies/solutions (include pricing for maintaining capability in pre-award quote).

o Prior to performing weld repairs (or potentially the entire availability), the Coast Guard will be securing and electrically isolating the installed fire alarm system, in conjunction with performing other measures that will protect installed electronic systems that could be damaged by weld repairs; therefore the vessel's installed fire alarm/detection system will potentially not be available during the performance period. Provide a supplemental temporary fire-alarm system while the installed system is down. Monitor that system for the duration of its installation.

o Describe how any required temporary/supplemental fire detection/alarm systems will notify fire responders.

o Describe all anticipated breaches of the cutter's Fire Protection Boundaries and the proposed temporary solutions that will minimize impact on the Fire Protection Boundary's proper function (e.g. removal of cables/hoses/etc. at the end of work day or installation of quick disconnects, installation of temporary fire curtains, etc.).

• Whenever maintenance/repairs described in work items or Change Requests necessitate securing, or making inoperable, all or part of the vessel's fire detection or fire alarm system, submit a proposal to the COR/KO describing an equivalent method(s) for temporarily maintaining all lost functionality of the system(s). Select the most economical option(s) available (i.e. for extended loss of service of the entire system the temporary fire detections/alarm system described in SFLC Std Spec 5550 may be the best option, for shorter durations temporary watch standers may be more economical, etc.). After the COR has agreed to the proposal, maintain the capability of these systems for the duration of the contract to the greatest practicable extent.

• Whenever maintenance/repairs described in work items or Change Requests necessitate securing, or making inoperable, all or part of the vessel's firefighting (e.g. fire main system, P100 and other dewatering systems, halon systems, portable fire extinguishers, etc.), lighting, and communications systems, submit a proposal to the COR/KO describing equivalent method(s) for temporarily maintaining all lost functionality of the system(s). Select the most economical option(s) available. After the COR has agreed to the proposal, maintain fire detection/alarm/fighting and lighting/communications capability for the duration of the contract to the greatest practicable extent.

• All Fire Protection Boundaries must be left intact and functional at all times to the greatest practicable extent. Notify the COR in writing whenever a breached Fire Protection Boundary will be left unattended outside of normal working hours (e.g. a door/hatch is made un-closable/un-securable due to repair work, an access cut is made into deck/bhd that is part of a Fire Protection Boundary, etc.). When a Fire Protection Boundary must be breached to facilitate contract work, minimize the impact using industry-standard methods (e.g. fire curtains, quick-disconnect fittings, etc.)

3.2 Contractor-provided fire watch personnel. The Contractor must provide fire watch personnel and equipment.

3.2 Contractor-provided fire extinguishers. The Contractor must provide portable fire extinguishers.

3.2 Fire watch requirements. The Contractor must refer to 3.3.1.3 (Fire watch requirements) of SFLC Std Spec 0000, in accomplishing the following task:

- Provide portable fire extinguishers for Coast Guard fire watch personnel. Coast Guard fire watch is in lieu of contractor personnel during the hours of 0800-1600, Monday through Friday, and limited to two Coast Guard fire watch personnel.
- Provide fire watch personnel and fire extinguishers for the duration of the availability period, during and beyond noted Coast Guard fire watch support.

3.3 Preservation requirements. The Contractor must accomplish all preservation tasks, including touch-ups, in accordance with SFLC Std Spec 6310.

3.3.1 Brand name approval. Ensure that all contractor-furnished coatings are in accordance with SFLC Std Spec 6310, Appendix C (Authorized Coatings for Use on Cutters and Boats).

3.3.2 Coating colors and system color schemes. The Contractor must obtain a written KO authorization to deviate from any coatings required in SFLC Std Spec 6310 Appendix C before work.

3.3.3 In-process quality control measures. The Contractor must abide by all the safety, preservation, and quality control requirements specified in SFLC Std Spec 0000, paragraph 3.2.4.2 (In-process QC measures for "critical-coated surfaces").

3.3.3.1 Quality control requirements. The Contractor must abide by the following when performing preservation related inspections. The following measurements must be randomly spaced throughout for the purposes of providing a representation of the entire prepared or coated surface.

3.3.3.1.1 Surface profile measurements. One surface profile measurement must be taken for every 200 square feet for the first 1000 square feet; for each additional 500 square feet or less, one profile measurement must be taken. Profile measurements must be taken in accordance with SFLC Std Spec 6310, paragraph 3.1.8.3 (Surface profile measurements). A "measurement" for surface profile is defined as follows:

- ASTM D4417, Method B: One profile measurement is the average (mean) of 10 individual readings.
- ASTM D4417, Method C: One profile measurement is the average (mean) of 2 individual readings.

3.3.3.1.2 Soluble salt conductivity measurements. 5 conductivity measurements must be taken every 1000 square feet. For submerged (immersed) applications conductivity measurements must not exceed 30 microsiemens/cm. For non-submerged (non-immersed) applications conductivity measurements must not exceed 70 microsiemens/cm. If a conductivity check fails, clean the surface in accordance with SFLC Std Spec 6310, paragraph 3.1.8.5 (Soluble salt removal).

3.3.3.1.3 Coating thickness measurements. Three area measurements must be taken for the first 1000 square feet; for each additional 1000 square feet, perform an additional area measurement. A "measurement" for coating thickness is defined as follows:

- SSPC-PA 2 defines an area measurement as 5 separate spot measurements randomly spaced throughout a 100 square foot area.
- SSPC-PA 2 defines a spot measurement as 3 gage readings and each new gage reading the probe must be moved to a new location within a 1.5-inch diameter circle defining the spot.

3.4 Welding and brazing requirements. The Contractor must perform all welding and allied processes, and NDE in accordance with SFLC Std Spec 0740.

3.4.1 HY-130 material substitution. The Contractor must be aware that HY-130 steel plating is no longer commercially available. For the purpose of performing flight deck repairs on US Coast Guard WMEC-270 "B-Class" cutters, Strenx 900 steel plating has been approved as a replacement for HY-130. Due to the similarity in material properties and weldability of HY-130 and Strenx 900, all welding procedures and welder qualifications for welding Strenx 900 must be the same as those outlined in NAVSEA TP 1688 as applicable for welding HY-130.

3.4.2 Standard spec modification. For any welding involving HY-130 on the flight deck of WMEC-270 "B-Class" cutters, perform all welding and allied processes, and non-destructive evaluation (NDE) in accordance with NAVSEA TP 1688. The Contractor must be aware that the welding requirements specified in this document take precedence over paragraph 3.3.6 of SFLC Standard Spec 0000 for the purpose of welding involving HY-130.

3.4.3 Approval to weld HY-130. To obtain Coast Guard approval to weld on HY-130 steel for WMEC-270 "B-Class" cutters, the Contractor must provide written Performance Qualification Records (PQR's) for each process to be used. The PQR's must be approved by one of the regulatory agencies affirming that the WPS meets the welding requirements of NAVSEA TP 1688. In addition, the Contractor must ensure that all subcontractors, prior to performing welding operations, have qualified procedures by meeting all the requirements set forth in this document.

NOTE

NAVSEA approval is NOT required for welding procedures submitted but the procedures must be reviewed and shown to satisfy the requirements set forth in NAVSEA TP 1688, by a welding regulatory agency. The requirements for welding Strenx 900 are considered the same as those for welding HY-130.

3.5 Environmental protection requirements. The Contractor must adhere to the following environmental protection requirements in accordance with the SFLC Stand Spec 0000:

3.5.1 Contractor operated (non USCG) facilities. The Contractor must provide and maintain environmental protection as defined in SFLC Std Spec 0000 Appendix A, Requirements for Environmental Protection at Contractor Operated (Non USCG) Facilities, as applicable, during the performance of this availability. Contractor must plan for and provide environmental protective measures to control pollution that develops during normal practice, as well as plan for and provide environmental protective measures required to correct conditions that develop during the project. Contractor must comply with applicable Federal, state, and local laws, codes, ordinances, and regulations in their entirety. Any reference to a specific portion of a Federal, state, or local law, code, ordinance, or regulation in this or any other item must not be construed to mean that relief is provided from any other sections of the law, code, ordinance, or regulation.

3.5.1 USCG facilities. The Contractor must provide and maintain environmental protection as defined in SFLC Std Spec 0000 Appendix B, Requirements for Environmental Protection at USCG Facilities, during the performance of this availability. Contractor must plan for and provide environmental protective measures to control pollution that develops during normal practice, as well as plan for and provide environmental protective measures required to correct conditions that develop during the project. Contractor must comply with applicable Federal, state, and local laws, codes, ordinances, and regulations in their entirety. Any reference to a specific portion of a Federal, state, or local law, code, ordinance, or regulation in this or any other item must not be construed to mean that relief is provided from any other sections of the law, code, ordinance, or regulation.

3.5.1.1 USCG Generator status. The activity Generator Status for the Coast Guard Facility is _____.

3.5.1.2 Plans and permits. The CG Facility has unit specific permits including the following:

- Spill Prevention Control and Countermeasures (SPCC) Plan: Unit has a SPCC Plan which requires certain unit-specific procedures be followed for the storage, inspection, and transfer of petroleum products in containers 55 gallons or greater.
- National Pollutant Discharge Elimination System (NPDES) Storm Water (SW) Permit: Unit has an NPDES SW permit which requires unit-specific procedures be followed for the storage and inspection of equipment and materials which may contribute contaminants to storm water discharges.
- Air Emission Permit: Unit has an Air Emission Permit which requires unit-specific procedures be followed for the emissions of VOCs and hazardous air pollutants.

3.5.2 Test and procedures. The Contractor is required to promptly conduct tests and procedures for the purpose of assessing whether operations are in compliance with applicable Environmental Laws. Analytical work must be done by qualified laboratories; and where required by law, the laboratories must be certified.

3.5.3 Regulatory notifications. The Contractor is responsible for all regulatory notification requirements in accordance with Federal, State and local regulations. In cases where the Coast Guard must also provide public notification, such as storm water permitting, the Contractor must coordinate with the Contracting Officer or COR, and if work is being performed at a USCG Facility, the local Facility Engineer or Engineering Officer. The Contractor must submit copies of all regulatory notifications to the Contracting Officer and the local Facility

Engineer or Engineering Officer prior to commencement of work activities. Regulatory notifications must be provided for including but not limited to demolition, renovation, National Pollutant Discharge Elimination System (NPDES) defined site work, and remediation of controlled substances such as asbestos, hazardous waste, and lead paint.

3.5.4 Environmental manager. The Contractor must appoint in writing an Environmental Manager for the project, who is responsible for coordinating Contractor compliance with Federal, State, local, and station environmental requirements. The Environmental Manager must ensure compliance with Hazardous Waste Program requirements, including hazardous waste handling, storage, manifesting, and disposal; implement the Contractors' Environmental Management Plan; ensure that all environmental permits are obtained, maintained, and closed out; ensure compliance with Storm Water Program Management requirements; ensure compliance with Hazardous Materials including storage, handling, and reporting requirements; as well as coordinate any remediation of regulated substances such as lead, asbestos, and polychlorinated biphenyl (PCB). This may be a collateral position; however the individual must be trained to accomplish the following duties; ensure waste segregation and storage compatibility requirements are met; inspect and manage Satellite Accumulation areas; ensure only authorized personnel add wastes to containers; ensure all Contractor personnel are trained in 40 CFR requirements and individual position requirements; coordinate removal of waste containers; and maintain the Environmental Records binder and required documentation, including environmental permits compliance and close-out.

3.5.5 HW disposal. Contractor must comply with SFLC Std Spec 0000 Appendix A, Requirements For Environmental Protection At Contractor Operated (Non USCG) Facilities for HW disposal.

3.6 Local Policy. The Contractor must refer to site (e.g., Base) Regulations and Instructions for details regarding local policies (e.g., crane services, parking, or facility usage).

3.7 SFLC Standard Specification approved changes. Approved updates to the 2022 SFLC Standard Specifications will appear here.

3.7.1 SFLC Standard Specification 5550: Replace paragraph 3.11.3 to state, "Material supporting imminent work shall be brought on the cutter and stored where the work is being performed. Material that appreciably contributes to fire load shall be removed at the end of each work shift when personnel are not present. Trash, debris, and packaging materials shall be promptly removed from the vessel at the end of each work shift and not allowed to accumulate." Advance the paragraph numbering of the Fire Prevention and Safety Inspection form to 3.11.4.

4. NOTES

4.1 QA inspection forms. QA inspection forms (QA-1 thru QA-5), required in SFLC Std Spec 6310 to be completed and submitted during preservation of "critical-coated surfaces", are provided at the end of this document.

USCGC ROBERT G. WARD (WPC-154) DRYDOCK AVAILABILITY FY2027

QA-1 - QUALITY ASSURANCE INSPECTION FORM

(PRESERVATION CHECKLIST)

VESSEL NAME	HULL #	WORK ITEM #	WORK ITEM TITLE
LOCATION OF WORK (INCL. FRAME #'S)			**AREA (SQFT)**

	CHECKPOINT 1 – COATING SYSTEM COMPLIANCE
	Ensure all coatings are in compliance with SFLC Std Spec 6310, Appendix C.
CHECKPOINT 2 - PAINT STORAGE	
	Ensure all coatings are kept at a temperature of 65 to 85°F at all times, unless otherwise specified by the coating mfg.
CHECKPOINT 3 - AMBIENT CONDITIONS	
	Ensure surface and surrounding temperatures are each between 50 and 90°F for water-containing coatings, and 35 and 95°F for other coatings, unless otherwise specified by the coating manufacturer(s).
	Ensure maximum relative humidity (RH) is as follows, from surface preparations through final curing of topcoat: 50% for tanks, voids, and vent plenum; and 85% for all other areas, unless otherwise specified by manufacturer(s).
	Ensure surface temperature is at least 5°F above the dew point, unless otherwise specified by the coating mfg.
CHECKPOINT 4 - PRE-SURFACE PREPARATION	
	Remove surface contaminants (soluble salts, loose rust, mud, and marine growth) with low pressure fresh water wash down (maximum 5,000 psi). If oil and grease are present, perform solvent cleaning, as per SSPC SP-1.
	Verify equipment setup, blast media, and surface preparation methods match designated test coupon.
CHECKPOINT 5 - SURFACE PREPARATION	
	Verify environmental conditions (see CHECKPOINT 3).
	Ensure cleanliness of prepared surface is as per specification (i.e.: SSPC SP-11, SP-10, SP WJ-2…).
	Verify surface anchor profile using ASTM D4417-Methods B or C against SFLC Std Spec 6310. Conduct profile readings at a minimum of 5 locations for the first 1000-sqft area, and 2 locations for each succeeding 1000-sqft area.
	Measure soluble salt conductivity in accordance with SSPC-Guide 15. Conduct 5 measurements per each 1000-sqft area (max. threshold: 70 microsiemens/cm for non-submerged surfaces, 30 microsiemens/cm for submerged surfaces).
CHECKPOINT 6 - PRIMER COAT APPLICATION	
	Verify environmental conditions (see CHECKPOINT 3).
	Verify proper mixing and stand-in (induction) times.
	Ensure no paint is applied when the temperature is expected to drop to freezing before the paint has dried.
	Ensure surfaces are completely dry, unless otherwise allowed by the coating manufacturer(s).
	Verify wet film thickness (WFT) at random, to prevent under or over application. Verify final DFT.
	Brush out all runs, sags, drips, and puddles.
	Perform visual inspection for holidays and other defects.
CHECKPOINT 7 – STRIPE COAT APPLICATION	
	Verify environmental conditions (see CHECKPOINT 3).
	Ensure overcoating window is as per manufacturer's instructions.
	After primer coat (mist coat after inorganic zinc), brush-apply un-thinned coat of same primer paint over edges, weld seams, cut-outs, and areas of complex geometries @ 3-4 mils wet film thickness (WFT).
CHECKPOINT 8 – TOP COAT APPLICATION	
	Verify environmental conditions (see CHECKPOINT 3).
	Ensure overcoating window is as per manufacturer's instructions.
	Verify proper mixing and stand-in (induction) times, as applicable.
	Verify wet film thickness at random, to prevent under or over application.
	Brush out all runs, sags, drips, and puddles.
CHECKPOINT 9 – FINAL INSPECTION	
	Verify final system dry film thickness. Conduct 5 sets of 3 readings for each of the first 3 100-sqft areas, followed by 5 sets of 3 readings for each succeeding 1000-sqft area.
	Ensure that system cure is in accordance with manufacturer's recommendation for intended service.
	Ensure potable water tank exhaust ventilation is maintained continuously from and during coating application through final system cure, to exhaust all solvent to the atmosphere and to prevent solvent entrapment.
	For immersion coatings (including tank U/W body), record date and time of the following events: Final coat application: _____/_____; Return to service or removal from environment controls: _____/_____
CHECKPOINT 10 – RECORD KEEPING	
	Complete, sign, and submit all provided QA Inspection Forms.

NAME OF QP-1/AMPP INSPECTOR	SIGNATURE	CERT. #	DATE / TIME
NAME OF CG REPRESENTATIVE	**SIGNATURE**	**UNIT**	**DATE/TIME**

QA-2 - QUALITY ASSURANCE INSPECTION FORM
(ENVIRONMENTAL READINGS)

VESSEL NAME	HULL #	WORK ITEM #	WORK ITEM TITLE

Use one sheet for each activity. Record conditions every four hours from before surface preparation to application of final coating system coat.

DATE & TIME	ACTIVITY (SURFACE PREPARATION, PRIMER COAT, BARRIER COAT, TOP COAT, ETC…)	LOCATION (FRAME & DECK, RELATION TO EQUIPMENT, ETC.)	TEMPERATURE				% REL. HUMID-ITY
			DEW PT.	SURFACE	AMBIENT	ΔT | DP - SURFACE |	

NAME OF QP-1/AMPP INSPECTOR	SIGNATURE	CERT. #	DATE / TIME
NAME OF CG REPRESENTATIVE	**SIGNATURE**	**UNIT**	**DATE/TIME**

QA-3a - QUALITY ASSURANCE INSPECTION FORM
(SURFACE PROFILE LOG FOR PROFILE MEASUREMENTS IAW ASTM D4417-METHOD-C)

VESSEL NAME	HULL #	WORK ITEM #	WORK ITEM TITLE
LOCATION OF WORK (FRAME REFERENCES)			**AREA (SQFT)**

SURFACE PREPARATION METHOD		PROFILE ACHIEVED (MILS)		
		MIN	MAX	MEAN
SSPC-SP-10/AMPP No. 2	☐			
SSPC-SP WJ-2/AMPP WJ-2	☐			
SSPC-SP-3	☐			
SSPC-SP-11	☐			
SSPC-SP-11 (inaccessible area)	☐			
Brush-blasting (non-metallic substrate)	☐			
ABRASIVE MANUFACTURER:		**ABRASIVE SIEVE SIZE:**		

PLACE SURFACE PROFILE REPLICA TAPES IN THE SPACES PROVIDED BELOW, TO SERVE AS PERMANENT QA RECORD. MAINTAIN A SEPARATE LOG FOR EACH LOCATION. WHEN AN AREA IS DIVIDED INTO SEPARATE SECTIONS, MAINTAIN A SEPARATE LOG FOR EACH SECTION.		
Place Surface Profile Replica Tape Here	Place Surface Profile Replica Tape Here	Place Surface Profile Replica Tape Here
Reading (mils):	Reading (mils):	Reading (mils):
Place Surface Profile Replica Tape Here	Place Surface Profile Replica Tape Here	Place Surface Profile Replica Tape Here
Reading (mils):	Reading (mils):	Reading (mils):
Place Surface Profile Replica Tape Here	Place Surface Profile Replica Tape Here	Place Surface Profile Replica Tape Here
Reading (mils):	Reading (mils):	Reading (mils):
Place Surface Profile Replica Tape Here	Place Surface Profile Replica Tape Here	Place Surface Profile Replica Tape Here
Reading (mils):	Reading (mils):	Reading (mils):
Place Surface Profile Replica Tape Here	Place Surface Profile Replica Tape Here	Place Surface Profile Replica Tape Here
Reading (mils):	Reading (mils):	Reading (mils):
MEAN MIL READING (IAW ASTM D4417-METHOD C) FOR ABOVE 15 READINGS:		

NAME OF QP-1/AMPP INSPECTOR	SIGNATURE	CERT. #	DATE / TIME
NAME OF CG REPRESENTATIVE	**SIGNATURE**	**UNIT**	**DATE/TIME**

QA-3b - QUALITY ASSURANCE INSPECTION FORM
(SURFACE PROFILE LOG FOR PROFILE MEASUREMENTS IAW ASTM D4417-METHOD-B)

VESSEL NAME	HULL #	WORK ITEM #	WORK ITEM TITLE
LOCATION OF WORK (INCL. FRAME #'S)			**AREA (SQFT)**

SURFACE PREPARATION METHOD		PROFILE ACHIEVED (MILS)		
		MIN	MAX	MEAN
SSPC-SP-10/AMPP No. 2	☐			
SSPC-SP WJ-2/AMPP WJ-2	☐			
SSPC-SP-3	☐			
SSPC-SP-11	☐			
SSPC-SP-11 (inaccessible area)	☐			
Brush-blasting (non-metallic substrate)	☐			
ABRASIVE MANUFACTURER:		**ABRASIVE SIEVE SIZE:**		

RECORD MEASUREMENTS TAKEN IN THE SPACES PROVIDED BELOW, TO SERVE AS PERMANENT QA RECORD. MAINTAIN SEPARATE LOG FOR EACH LOCATION. WHEN AN AREA IS DIVIDED INTO SEPARATE SECTIONS, MAINTAIN A SEPARATE LOG FOR EACH SECTION.					
Reading (mils):					
Reading (mils):					
Reading (mils):					
Reading (mils):					
Reading (mils):					
Reading (mils):					
Reading (mils):					
Reading (mils):					
Reading (mils):					
Reading (mils):					
Mean Mils Reading (IAW ASTM D4417-Method B for above 10 readings (by column):					
Mean Reading (mils)					

NAME OF QP-1/AMPP INSPECTOR	SIGNATURE	CERT. #	DATE / TIME
NAME OF CG REPRESENTATIVE	**SIGNATURE**	**UNIT**	**DATE/TIME**

QA-4 - QUALITY ASSURANCE INSPECTION FORM
(SURFACE SOLUBLE SALT CONDUCTIVITY LOG)

VESSEL NAME	HULL #	WORK ITEM #	WORK ITEM TITLE
LOCATION OF WORK (INCL. FRAME #'S)			AREA (SQFT)

SOLUBLE SALT CONDUCTIVITY MEASUREMENTS IAW SSPC-GUIDE 15.		
DATE	TEST LOCATIONS	CONDUCTIVITY (MICROSIEMENS/CM)

NAME OF QP-1/AMPP INSPECTOR	SIGNATURE	CERT. #	DATE / TIME
NAME OF CG REPRESENTATIVE	SIGNATURE	UNIT	DATE/TIME

QA-5 - QUALITY ASSURANCE DATA FORM
(COATING THICKNESS)

(Use one sheet for each sequence)

VESSEL NAME	HULL #	WORK ITEM #	WORK ITEM TITLE

COATING MFG	PRODUCT NAME	BATCH #	INDUCTION TIME	COATING SYSTEM SEQUENCE (PRIMER/TOUCHUP/3RD COAT, ETC.)

DRY FILM THICKNESS (DFT) MEASUREMENTS IAW SSPC-PA 2.						
SPOT	1	2	3	4	5	AVERAGE VALUE
*BASE METAL READING (BMR)						
*Required, If Magnetic Pull-Off (Type I/Banana) Gauge Is Used.						

LOCATION (FRAME REFERENCE):								
SPOT	1	2	3	4	5	OVERALL AVG. DFT	ADJUSTMENTS	
1							AVG. BMR	DEVIATION
2								
3						BEFORE ADJUSTMENTS	AFTER ADJUSTMENTS	
AVG.								
LOCATION (FRAME REFERENCE):								
SPOT	1	2	3	4	5	OVERALL AVG. DFT	ADJUSTMENTS	
1							AVG. BMR	DEVIATION
2								
3						BEFORE ADJUSTMENTS	AFTER ADJUSTMENTS	
AVG.								
LOCATION (FRAME REFERENCE):								
SPOT	1	2	3	4	5	OVERALL AVG. DFT	ADJUSTMENTS	
1							AVG. BMR	DEVIATION
2								
3						BEFORE ADJUSTMENTS	AFTER ADJUSTMENTS	
AVG.								

APPLICATION METHOD (AIRLESS, CONVENTIONAL SPRAY, ROLLED)	AVERAGE DFT

NAME OF QP-1/AMPP INSPECTOR	SIGNATURE	CERT. #	DATE / TIME
NAME OF CG REPRESENTATIVE	SIGNATURE	UNIT	DATE/TIME

4.2 Tank and Void Assessment form.

SFLC-ESD-25	TANK AND VOID ASSESSMENT FORM
PRINT RESET	

GENERAL DATA	Note: Use SFLC-ESD-29 for Compartments other than Tanks & Voids.		
Inspector's Name:	Organization:	Contact Info:	
Cutter Name:	Cutter Class:	Hull:	
Tank:	Service:	Tank Area:	Gallons:
Solid Balast:	Access Compt:	Date:	Assessment Reason:

ACCESS DATA	
Manhole and cover condition:	Tank Penetration Condition:

VENT OVERFLOW DATA		
Present: ◯Yes ◯ No	Check Valve Installed: ◯Yes ◯No	Check Valve Operates Properly: ◯Yes ◯No

LADDER DATA		
NR of Ladder(s) Present: ◯Yes ◯No	Ladder Damaged: ◯Yes ◯No	Ladder Material:

TANK LEVEL INDICATOR (TLI) DATA		
TLI Present in Tank: ◯Yes ◯No	TLI Damaged: ◯Yes ◯No	TLI Type:

SOUNDING TUBE DATA	
Sounding Tube Present in Tank: ◯Yes ◯No	Sounding Tube Damaged: ◯Yes ◯No
Striker Plate Damaged (>50%): ◯Yes ◯No	

CATHODIC PROTECTION DATA		
Cathodic Protection in Tank: ◯Yes ◯No	Total Zincs:	Number of Zincs > 50% Depleted:

	1-6		Cleanliness & Housekeeping
Clean to light layer or residue		1-2 (G)	Comments:
Loose accumulation scale		3-4 (Y)	
Impending residue and sediments		5-6 (R)	

	%	1-6		Coating Systems
All Painted Surfaces			1-2 (G)	Comments:
			3-4 (Y)	
			5-6 (R)	

	%	1-6		Structural
Corrosion			1-2 (G)	Comments:
			3-4 (Y)	
			5-6 (R)	
Pitting & Grooving			1-2 (G)	Comments:
			3-4 (Y)	
			5-6 (R)	

Page 1 of 2 18MAR2015

SFLC-ESD-25	TANK AND VOID ASSESSMENT SHEET
PRINT	

Structural Integrity Data					
Estimated Total Linear Feet of Structure Requiring Repair:			Estimated Total Square Feet of Plating Requiring Repair:		
Cracks/ Fractures Present:	◯ Yes	◯ No	Buckling/Deflections/ Distortions Present:	◯ Yes	◯ No
Holes Present:	◯ Yes	◯ No	Material Wastage Present:	◯ Yes	◯ No
All Welds Intact:	◯ Yes	◯ No	Structural Evaluation Recommended:	◯ Yes	◯ No

PHOTOGRAPHS

Pictures Taken (enter quantity):

Note: To add pictures to this form, Work Station must have Adobe Acrobat (not Reader) installed.
Add all photos and photo comments to a word document and save file. Open this form and click "Combine Files". Add the document with photos you've just saved and save as a new combined .pdf files.

Additional Comments:

Page 2 of 2 18MAR2015

WORK ITEM 1: Topside Exterior Structure, Repair

1. SCOPE

1.1 Intent. This work item describes the requirements for the Contractor to repair exterior structural discrepancies as described in Table 1.

TABLE 1 – IN SCOPE DISCREPANCIES

ITEM	DESCRIPTION OF DISCREPANCIES AND RECOMMENDED REPAIRS
1	Renew approx. 6 sqft of deck plate on PORT side of Focsle along frames 7-8 from the edge of gunnel rail between the two vertical rail supports to approx. 2 feet inboard, as designated by the Coast Guard Inspector. All welding repairs must be done in accordance with SFLC Std Spec 0740.

1.2 Government-furnished property.

None.

2. REFERENCES

COAST GUARD DRAWINGS

Coast Guard Drawing 154 WPC 111-301, Rev B, Shell Expansion

Coast Guard Drawing 154 WPC 151-301, Rev E, Scantlings - Superstructure

Coast Guard Drawing 154 WPC 167-201, Rev F, Schedule of Doors, Manholes and Hatches

Coast Guard Drawing 154 WPC 168-201, Rev F, Louvers and Covers A&D

Coast Guard Drawing 154 WPC 171-201, Rev D, Mast A&D

Coast Guard Drawing 154 WPC 601-302, Rev D, General Arrangement

Coast Guard Drawing 154 WPC 612-201, Rev D, Lifelines, Liferails & Stanchions

Coast Guard Drawing 154 WPC 613-201, Rev E, Rigging & Covers A&D

Coast Guard Drawing 154 WPC 623-301, Rev A, Ladder Arrangement

COAST GUARD PUBLICATIONS

Surface Forces Logistics Center Standard Specification 0000 (SFLC Std Spec 0000), 2022, General Requirements

Surface Forces Logistics Center Standard Specification 6310 (SFLC Std Spec 6310), 2022, Requirements for Preservation of Ship Structures

Surface Forces Logistics Center Standard Specification 0740 (SFLC Std Spec 0740), 2022, Welding and Allied Processes

OTHER REFERENCES

None.

3. REQUIREMENTS

3.1 General.

3.1.1 CIR.

None.

3.1.2 Tech Rep.

Not applicable.

3.1.3 Protective measures. The Contractor must furnish and install all protective coverings to seal off and protect all non-affected vessel's components, equipment, and spaces near the work area against contamination during the performance of work. Upon completion of work, the Contractor must remove all installed protective measures, inspect for the presence of contamination, and return all contaminated equipment, components, and spaces to original condition of cleanliness.

3.1.4 Interferences. The Contractor must handle all interferences in accordance with SFLC Std Spec 0000, paragraph 3.3.5 (Interferences). Known interferences include, but are not limited to the following:

- Coating system
- Forward aux insulation
- Cabling

3.2 Inspection and Repairs. The Contractor must perform the following:

3.2.1 Inspection. Inspect all “in-scope” items and areas designated for repair in Table 1 above. Determine if there are any additional repairs required, other than those specified in the “Repair Description”. Submit a CFR detailing any recommended additional repairs that may be required to complete the work specified herein. Pending the inspection perform those additional repairs after the KO releases a change request authorizing those additional growth repairs.

3.2.2 Repairs. Repair the discrepancies described in Table 1 in the “Description of Discrepancies and Recommended Repairs” column. Refer to the Coast Guard Drawings listed in Section 2 for configuration description, as applicable.

3.3 Touch-up preservation. The Contractor must prepare and coat all new and disturbed exterior and interior surfaces to match existing adjacent surfaces, in accordance with SFLC Std Spec 6310, Appendix A (Cutter and Boat Exterior Painting Systems) and Appendix B (Cutter and Boat Interior Painting Systems), respectively, and as applicable. Abide by all touch-up requirements outlined in SFLC Std Spec 0000.

4. NOTES

This section is not applicable to this work item.

WORK ITEM 2: Hull Plating, Inspect

1. SCOPE

1.1 Intent. This work item describes the requirements for the Contractor to conduct an inspection of the hull shell plate and inaccessible voids and to perform the designated hulls scans as specified below.

TABLE 1 – ELEVATED INSPECTION SCANS

INCLUDED	SCAN TYPE
NO	Conduct an automated crawler ultrasonic inspection scanning (i.e. SIDESCAN) of underwater hull plating and entire freeboard, up to the main deck edge to detect all metal corrosion and deterioration. See paragraph 3.6.1 for requirements.
YES	Conduct a 3D laser scan of the cutter's exterior hull shell, deck and dock floor locations/deformations and provide results in 3D CAD format. See paragraph 3.6.2 for requirements

If "YES" appears in the left-column cell then the corresponding scan work is required, must be quoted on, and executed during the contract performance period. If "NO" appears in the cell then the corresponding scan work is NOT required, must NOT be quoted on, nor executed during the contract performance period.

TABLE 1A – FREEBOARD TEARDROP MODS

CSMP #	DESCRIPTION
2021001	At the port and stbd teardrop areas, extend the existing stainless-steel hull insert aft using an insert of dimensions 32" x 56" x 3/16" of the in-kind stainless-steel material specified on 154 WPC 111-301.

1.2 Government-furnished property.

None.

2. REFERENCES

COAST GUARD DRAWINGS

Coast Guard Drawing 154 WPC 085-301, Rev B, Hull Lines and Offsets

Coast Guard Drawing 154 WPC 111-301, Rev B, Shell Expansion

Coast Guard Drawing 154B WPC 111-301, Rev A, Shell Expansion

Coast Guard Drawing 154 WPC 997-302, Rev -, Docking Plan (Supersedes DWGS 154-WPC-997-1, 997-301)

COAST GUARD PUBLICATIONS

Surface Forces Logistics Center Standard Specification 0000 (SFLC Std Spec 0000), 2022, General Requirements

Surface Forces Logistics Center Standard Specification 0740 (SFLC Std Spec 0740), 2022, Welding and Allied Processes

OTHER REFERENCES

ASTM International (ASTM) D5363, 2008; Standard Specification for Anaerobic Single-Component Adhesives (An)

MIL-S-45180, 1998; Sealing Compound, Gasket, Hydrocarbon Fluid and Water Resistant

3. REQUIREMENTS

3.1 General.

3.1.1 CIR. The Contractor must submit a CIR for the inspections listed in the following paragraph(s):

- 3.4 Initial inspection/test report submission.

3.1.2 Tech Rep. None.

3.1.3 Protective measures. The Contractor must furnish and install all protective measures in accordance with SFLC Std Spec 0000, paragraph 3.3.3 (Vessel component, space, and equipment protection).

3.1.4 Interferences. The Contractor must handle all interferences in accordance with SFLC Std Spec 0000, paragraph 3.3.5 (Interferences).

3.1.5 Refer to Coast Guard Drawings listed in Section 2 (References) for guidance.

3.2 Inspect hull shell plate. In the presence of the Coast Guard Inspector, the Contractor must visually inspect all hull freeboard and underwater body shell plate (water boundary) to identify all discrepancies (e.g. pitting, rust, significant deformation, cracks, obvious reduced shell plate thickness, etc.). If "Yes" is specified in Table 1 above for either of the elevated inspections, then perform those inspections as well. If "No" is specified in Table 1 above, then the corresponding elevated inspection is not required.

3.3 Inspect and test inaccessible voids. In the presence of the Coast Guard Inspector, the Contractor must remove and dispose of all drain plugs for all voids and appendages listed in Table 2 below. Verify that no liquids drain from the voids/appendages, which may indicate a hull leak. Identify all associated discrepancies. Dispose of drained liquids in accordance with all Federal, state, and local laws and regulations. Upon completion of all work chase all female threads for each corresponding plug removed, renew all plugs (using either 316 stainless steel or Monel, as applicable), and coat new plugs prior to installation with a sealing and locking compound conforming to ASTM D5363-AN0123 or a flexible joint compound conforming to MIL-S-45180, Type II. Subsequently, if authorized by the KO, if void air tests are specified in a Change Request, then perform those air tests in accordance with SFLC Std Spec 0740, Appendix C. Upon completion of those tests submit a CFR detailing discrepancies and recommended repairs.

TABLE 2 – DRAIN PLUGS FOR U/W INACCESSIBLE VOIDS

VOID	FRAME	SIDE
Fairing Plate (4ea)	44	P/S
Skeg	38 to 42	CL

CAUTION

Some liquids that are drained may be classified as hazardous materials or hazardous waste depending on state and local regulations. The vessel environmental coordinator may assist with determination of waste category.

3.4 Initial inspection/test report submission. Submit a CIR detailing all discrepancies that were found during all hull inspections and tests performed. Include repair recommendations in the report.

3.5 Repairs. Pending inspections, if the KO releases a Change Request that specifies growth repairs to correct discrepancies, then the Contractor must perform the work specified in the Change Request and conform to the following requirements, as applicable.

3.5.1 Perform the repairs specified above in TABLE 1A – FREEBOARD TEARDROP MODS (price this work in with the pre-award quote for this work item, not by CFR/CR/MOD).

3.6 Various standards and specifications. The Contractor must conform to the following standards and specifications when performing the elevated inspection scans if they have been invoked by Table 1 above.

3.6.1 Automated ultrasonic inspection (SIDESCAN) standards and specifications. When performing this type of scan, all shell plate thickness discrepancies must be identified and reported, while accomplishing and conforming to the following:

3.6.1.1 All scanning work must be performed in the presence of the Coast Guard Inspector or COR. The KO may request that evidence be submitted proving that, at all times, one or more of the on-site technicians, who are performing or overseeing the scan work, meet all qualifications set forth below:

- have successfully operated the automated plate thickness scanner being used in this contract during at least one similar contract
- are conforming to all ASNT Recommended Practice No. SNT-TC-1A 2006 requirements
- possess ASNT Level III analyst certifications for overseeing the entire scanning process and for evaluating all data obtained during scanning.
- possess ASNT Level III or II analyst certification for operating a handheld meters

3.6.1.2 An “Echo-To-Echo Transducer” is not authorized for use.

3.6.1.3 The automated scanning machine must cover all areas of the hull (below the water line and entire freeboard area) up to a maximum of six inches around obstacles. Acceptable obstacles include sea suctions, discharges, rudderposts, anodes, stern tubes, drydock blocks and areas blocked by immovable scaffolding or shipyard activity.

3.6.1.4 The automated scanner must be capable of scanning all convex areas with a radius of 8 inches and greater and concave areas with a radius of 12 inches and greater.

3.6.1.5 Automated scanning resolution must be set to 0.5” x 0.5”.

3.6.1.6 Handheld scanning must be accomplished in areas not covered by the automated scanning, and in areas where the automated scanner loses data due to sharp dents, surface irregularities, roughness, etc. Follow these guidelines:

- the handheld meter must be calibrated each time it is powered up for use using an ASNT certified calibration block made of mild steel. Demonstrate that the equipment is calibrated prior to and immediately after scanning.
- the handheld meter must be set to a resolution of 2.0" x 2.0" or better.
- supplemental handheld readings must be provided on any area of the hull identified as thinner than the criteria for repair defined in paragraph titled "Evaluation criteria" below.
- a resolution set to 1.0" x 1.0" or better must be used in areas where the automated scanner loses data.

3.6.1.7 Measure the average paint thickness in order to provide a more accurate metal thickness at all scanned points. The average paint thickness must be clearly defined in the reports.

3.6.1.8 Evaluation Criteria. Use the following evaluation criteria for all scanned plating (underwater body and freeboard):

- Plates where scan data indicates wastage greater than or equal to 25% nominal plate thickness must be highlighted in "RED" and designated "repair areas".
- Plates where scan data indicates wastage between 10% to 24% of nominal plate thickness must be highlighted in "YELLOW".
- Plates where scan data indicates wastage less than 10% of nominal plate thickness must be highlighted in DARK GREEN.

3.6.1.9 Label each plate on the hull designated for inspection as per the CG drawings listed in Section 2.

3.6.1.10 Outline areas measured with the handheld meter on the hull.

3.6.1.11 Outline in WHITE or YELLOW all areas on the hull identified with 25% or greater deterioration.

NOTE

The colors used to label repair areas must not be used for any other markings on the hull.

3.6.1.12 Develop an electronic file side scan report comparing the results and the plate drawings (to be submitted with the CIR specified above). The reports must include the following contents (minimum):

- Findings narrative summary
- Plate summary – must be in table format with at minimum a column for plate identification, repair identification, location of repair area, size of repair area, and brief description (i.e. exterior pitting, hole, interior corrosion, etc.)
- A composite mosaic of the scan images overlaid on the appropriate shell plate expansion drawing as listed in paragraph titled "Evaluation criteria" above.
- A separate page for each plate with a scan image of that plate only. Each page must contain the following:
    - Plate nominal thickness(es).
    - A legend showing plate thickness for green, yellow and red criteria.

  - All repair areas must be outlined in blue in the scan image as they are marked on the hull.
  - All unusual areas on the scan such as rough surface, etc. must be called out and noted in blue.
  - Plate orientation relative to the cutter must be identified.
- Provide an individual photo for each plate requiring repairs.
- Raw data files.

3.6.1.13 The report must be organized as follows and included in the "Initial inspection/test report submission" described above with two copies of the side scan report on unprotected/editable compact discs (CDs).:

- Table of contents
- Plate summary
- Complete port side mosaic showing colorized results
- Port side scan and digital photos of each plate in sequential order
- Complete starboard side mosaic showing colorized results
- Starboard side scan and digital photos of each plate in sequential order
- Transom scan and digital photos

NOTE

All files must be compatible with USCG standard workstation software (i.e., AutoCAD, MS Office, Adobe PDF, JPEG format).

3.6.2 3D laser scan. When performing this type of scan, the cutter's hull (sides, bottom, and transom), shaft skegs (and shafting if in place) and the dock floor must be scanned to obtain a 3D point cloud, and a registered, reduced point cloud data set as follows:

3.6.2.1 This work must be performed by a qualified technician. The KO may request that evidence be submitted proving that one or more on-site technicians have successfully operated the 3-D laser scanning equipment being used in this contract during at least one prior similar contract. And that one or more on-site technicians have prior experience performing all tasks specified under this requirement.

3.6.2.2 The 3D laser scan point cloud accuracy must be within +/- 2 mm local scans and 5mm global scan alignment for the hull and deck surfaces. A point cloud reduction process must be conducted to determine the shell plating deformations including an average of the deck nonskid covering to show the underlying plate deformations by averaging points over a 20 mm grid on the hull. The point cloud of hull appendages must be reduced over a 1mm grid.

3.6.2.3 The 3D laser scan (3D Point cloud) must convert to a point cloud format that can be used in Rhino 3D version 5.0. Staging interferences located around the hull of the Cutter must be digitally removed from the data.

3.6.2.4 The measured 3D point cloud and meshed surfaces must be compared to the hull lines based NURBS surface developed by US Coast Guard SFLC to determine dimensional deviations from the lines based NURBS surface. The dimensional deviations must be rendered in the Rhino 3D in 1mm increments and colors to show the dimensional gradients. The hull must be positioned relative to the 3D hull surface in coordination with the US Coast Guard.

3.6.2.5 Report. A neatly organized model using layers and color contour images of the surface comparisons must be provided. The 3D point cloud in Rhino 3D 5.0 formatted files must be provided and delivered in electronic format by ftp or mailed CDs to the USCG within 2 weeks after conducting the 3D Laser Scan. The report must include all photographs, illustrations, charts, graphs, tables, calculations, text, analyses, algorithms, conclusions, and recommendation deliverables developed as a part of this project. The Coast Guard will review the report and may provide feedback or conduct discussions with the Contractor prior to acceptance. The report must be delivered to USCG with a document cover letter to the following address:

Commanding Officer (SFLC-ESD-NAME)
USCG Surface Forces Logistics Center (Mail Stop 25)
2401 Hawkins Point Road Baltimore, MD 21226-5000 A
Attn: Chief, Naval Architecture Section

4. NOTES

4.1 Data rights. All data regardless of form or medium must be the sole property of the US Coast Guard and must not be released without the written consent of the US Coast Guard.

WORK ITEM 3: Tanks and Voids, Inspect and Preserve

1. SCOPE

1.1 Intent. This work item describes the requirements for the Contractor to perform various tasks to the cutter's tanks and voids.

1.2 Government-furnished property.

None.

2. REFERENCES

COAST GUARD DRAWINGS

Coast Guard Drawing 154 WPC 506-301, Rev -, Fills, Vents, Sounds, Overflows Diagram

Coast Guard Drawing 154B WPC 506-201, Rev A, Fills, Vents, Sounds, Overflows Arrangement

Coast Guard Drawing 154 WPC 601-302, Rev D, General Arrangement

Coast Guard Drawing 154B WPC 601-302, Rev -, General Arrangement

COAST GUARD PUBLICATIONS

Surface Forces Logistics Center Standard Specification 0000 (SFLC Std Spec 0000), 2022, General Requirements

Surface Forces Logistics Center Standard Specification 6310 (SFLC Std Spec 6310), 2022, Requirements for Preservation of Ship Structures

Surface Forces Logistics Center Standard Specification 8636 (SFLC Std Spec 8636), 2022, Temporary Hull Accesses

OTHER REFERENCES

MIL-DTL-1222, Dec 2000, Studs, Bolts, Screws and Nuts for Applications Where a High Degree of Reliability Is Required

Society of Automotive Engineers (SAE) Aerospace Material Specification (AMS) C6183, 2013, Cork and Rubber Composition Sheet; For Aromatic Fuel and Oil Resistant Gaskets

3. REQUIREMENTS

3.1 General.

3.1.1 CIR. The Contractor must submit a CIR for the inspections listed in the following paragraph(s):

- 3.2.2.4 Submit tank and void inspection report.

3.1.2 Tech Rep.

None.

3.1.3 Protective measures. The Contractor must furnish and install all protective measures in accordance with SFLC Std Spec 0000, paragraph 3.3.3 (Vessel component, space, and equipment protection).

3.1.4 Interferences. The Contractor must handle all interferences in accordance with SFLC Std Spec 0000, paragraph 3.3.5 (Interferences).

3.1.5 Plug log. The Contractor must keep a written record of all plugs put in any tank's vents. A separate list must be kept for each tank being entered. Ensure that all plugs are removed from each tank upon completion of work in the tank. Ensure the plug log is available to the Coast Guard inspector when the inspector is performing his close-out inspection on each tank.

3.2 Mandatory/recurring tasks. The Contractor must refer to the Coast Guard drawings and references listed is section 2 (References) to accomplish the following:

NOTE

There are no inherent liquid load restrictions...an FRC may be docked across a full range of liquid loads (e.g. minimum operating, half load, full load, etc.). However, project-specific or docking-facility-specific conditions may emerge requiring adjustments to liquid load.

3.2.1 Adjustments to liquid load for docking purposes. If the Contractor requires a change to liquid load to facilitate docking or other emerging work, resulting in a new post-award unforeseeable cost, submit a CFR that describes and justifies the required change. If fluid removal is required, dispose of removed fluids in accordance with all applicable Federal, state, and local regulations (see 4.1 (Tank content restoration)). Document a complete chain of custody record of the removed tank contents from the vessel to the point of final destination or delivery.

NOTE

Coast Guard personnel will operate all shipboard machinery and equipment.

3.2.2 Tank and void inspections, cleaning, preservation, or "no-work". Perform the specified tasks on the tanks and voids designated in Table 1, and in accordance with the requirements specified below:

NOTE

Each tank listed in Table 1 below should be offloaded to the greatest extent practicable prior to the start of the contract unless it is designated as "No-Work".

Pending inspections, if Grey Water Tank weld repairs are required, adjacent tanks (Fuel Oil Storage 1 3-11-0-F, Fuel Oil Service 1P 3-17-2-F, Fuel Oil Service 1S 3-17-1-F, Fuel Oil Storage 2 3-23-0-F) may have to be cleaned and gas freed.

TABLE 1 – VOIDS AND TANKS

	TASK(S)	TANK/VOID	COATING SYSTEM (TABLE IN APPENDIX B OF SFLC STD SPEC 6310)	TOPCOAT COLOR
1	Inspect	Fuel Oil Service 1S, 3-17-1-F 1750 gal @95% cap.	TANKS AND VOIDS (Lube Oil and Fuel Tanks, Unballasted with Water Extraction Systems)	N/A
2	Inspect	Fuel Oil Service 1P 3-17-2-F 1750 gal @95% cap.	TANKS AND VOIDS (Lube Oil and Fuel Tanks, Unballasted with Water Extraction Systems)	N/A
3	Inspect	Fuel Oil Service 2S 3-41-1-F 840 gal @95% cap.	TANKS AND VOIDS (Lube Oil and Fuel Tanks, Unballasted with Water Extraction Systems)	N/A
4	Inspect	Fuel Oil Service 2P 3-41-2-F 840 gal @95% cap.	TANKS AND VOIDS (Lube Oil and Fuel Tanks, Unballasted with Water Extraction Systems)	N/A
5	Inspect	Emer Gen Fuel Tank 1-10-1-F 93 gal @95% cap.	TANKS AND VOIDS (Lube Oil and Fuel Tanks, Unballasted with Water Extraction Systems)	N/A
6	Inspect	Fuel Oil Storage 1 3-11-0-F 5040 gal @95% cap.	TANKS AND VOIDS (Lube Oil and Fuel Tanks, Unballasted with Water Extraction Systems)	N/A
7	Inspect	Fuel Oil Storage 2 3-23-0-F 5350 gal @95% cap.	TANKS AND VOIDS (Lube Oil and Fuel Tanks, Unballasted with Water Extraction Systems)	N/A
8	Inspect	Fuel Oil Overflow 1 3-10-0-F 606 gal @95% cap.	TANKS AND VOIDS (Fuel/JP-5 Tanks, Service, Storage, Overflow, Drain)	White (17975)
9	Inspect	Fuel Oil Overflow 2 3-40-0-F 1159 gal @95% cap.	TANKS AND VOIDS (Fuel/JP-5 Tanks, Service, Storage, Overflow, Drain)	White (17975)
10	Inspect	FWD Void (3-0-0-V)	“INACCESSIBLE AREAS (Inaccessible Areas, Steel) – Option I (see SFLC STD SPEC 6310 note 8, for “flow-coating” rqmts.)	N/A
11	Inspect	Oily Water Tank (3-34-1-W) 336 gal @95% cap.	"TANKS AND VOIDS (Tanks and Voids, General)” – Option I”	White (17975)
12	Inspect	Dirty Oil Tank (3-34-2-F) 336gal @95% cap.	"TANKS AND VOIDS (Tanks and Voids, General)” – Option I”	White (17975)
13	Clean, Inspect	Grey Water Tank (3-17-0-W) 2668gal @95% cap.	"TANKS AND VOIDS (Grey Water, Sewage, and CHT Tanks) – Option I”	White (17975)
14	Inspect	AFT Void (3-43-0-V)	"TANKS AND VOIDS (Tanks and Voids, General)” – Option I”	White (17975)

NOTE

Only perform the tasks designated in the "TASK(S)" column on the corresponding tank or void.

3.2.2.1 No Work on the tank or void. When "No-Work" is specified in the "Task(s)" column for a corresponding tank/void in Table 1 above, then no pre-award work was identified so no work on that tank or void is specified herein. Unless the KO has released a Change Request, or a condition described in paragraph 3.2.1 above has been identified, then there is no work on the tank or void. The tank or void is listed in Table 1 above "for info only".

3.2.2.2 Cleaning requirements. When "Clean" is specified in the "Task(s)" column for a corresponding tank/void in Table 1 above, perform the following on that tank or void to clean all interior surfaces:

- Clean interior surfaces free of all foreign materials (e.g. residual fuel, water, sediment, sludge, rust, biological growth, etc.)
- Do not to damage the existing coating system
- Remove any cleaning media and residues continuously during the washing process. Remove all residual wash media upon completion and wipe up all residual moisture with clean lint-free cloths.
- Dispose of residual tank contents and cleaning fluids in compliance with all applicable Federal, state, and local laws, ordinances and regulations. Document a complete chain of custody record of the removed tank contents and generated wastes, from the vessel to the point of final destination or delivery. Submit the document to the COR upon completion of work.

3.2.2.3 Inspection requirements. When "Inspect" is specified in the "Task(s)" column for a corresponding tank/void in Table 1 above, perform the following on that tank or void to identify all discrepancies:

- Witness Coast Guard Personnel perform an initial operational test any equipment directly associated with the void or tank that may be disturbed or damaged during performance of the specified work (e.g. TLI's, etc.). Preform this test prior to performing any other work on the tank or void.
- Visually inspect all interior surfaces of the void or tank (e.g. bulkheads, floor and overhead plating, structural members, manhole cover surfaces, fasteners, gasket seating surfaces, etc.) for structural discrepancies (e.g. coatings failures, rust, corrosion, bent or deferment plate or stiffeners, etc.)
- Identify all sounding/vent tube and striker plate discrepancies, as applicable
- Identify all suction and discharge piping discrepancies, as applicable
- Identify the location of, and measure the depth of, all pits in the tank/void interior surface
- Verify that all fastener are the correct material and are in satisfactory condition (correct fastener material is stainless steel).
- Identify and inspect all zinc anodes that may be installed in the tank or void, if damaged or significantly deteriorated make a recommendation to renew the anode(s) in the inspection report

3.2.2.4 Submit tank and void inspection report. **Submit a CIR** that details all discrepancies identified during the inspections specified in Table 1 and paragraph 3.2.2.3 above, include in the report all recommended repairs.

3.2.2.5 Preservation requirements. When "Preserve" is specified in the Task(s) column for a corresponding tank/void in Table 1 above, perform the following on that tank or void:

- If economically advantageous, submit a CFR requesting permission from the KO to cut hull accesses to facilitate preparation and preservation work. Perform all work required to open and close the access openings in accordance with SFLC Std Spec 8636.
- Prepare and coat all of the tank or void interior surfaces (e.g. all tank/void interior surfaces, the internal surfaces of all associated manhole covers, the manhole cover coaming extending outward to the weld joint that ties the coaming to the tank exterior, etc.). Use the preparation method and coating system designated in Table 2 above that corresponds to the tank/void being preserved.
- Refer to SFLC STD SPEC 0000 and comply with all "In-process QC measures for 'critical-coated surfaces'" requirements. All tanks and voids are considered "critical-coated surfaces".
- Prepare and coat all manhole cover external surfaces to match existing adjacent surfaces, using the system specified for "Decks, Metal Interior and Non-Skid Areas (Steel and Aluminum Decks)", in SFLC Std Spec 6310, Appendix B (Cutter and Boat Interior Painting Systems). Select finish/top coat color to match existing adjacent surfaces.

3.2.2.6 Tank and void closing. The Contractor must ensure that the tank/void remains open for at least 24 hours after completion of any KO-authorized repair and preservation procedures. Notify the COR at least 24 hours prior to closing the tank/void. After satisfactory inspection by the Coast Guard Inspector and completion of all authorized repairs, close tank/void manhole cover(s) using new gasket material conforming to AMS-C-6183. Chase threads on studs to ensure even installation of the access covers.

NOTE

Coast Guard personnel will operate all shipboard machinery and equipment.

3.2.2.7 Operational test, post repairs. After completion of work, the Contractor must thoroughly test, in the presence of the Coast Guard Inspector and demonstrate all equipment disturbed or worked (e.g. TLIs, etc.) to be in satisfactory operating condition. Submit a CFR.

3.3 Conditional repair task requirements. If the KO approves a Change Request that specifies growth repairs to correct discrepancies, the Contractor must perform the work specified in the Change Request and conform to the following requirements, as applicable.

3.3.1 Preserve the FWD Void (3-0-0-V). If preservation of the void is specified in the Change Request, accomplish the following:

- Clean the fwd void until free of loose debris, remove old rust preventive compound, then verify no damage, corrosion, or other discrepancies to the base structure.
- Fill the void interior surfaces with a rust preventive compound conforming to MIL-PRF-16173, Class II, Grade 3, to coat all surfaces.
- Drain, collect, and dispose of remaining compound in accordance with all applicable Federal, state, and local regulations.
- Ensure that the coated surfaces are left exposed to the atmosphere for 24 hours to allow for adequate drying.

4. NOTES

4.1 Tank content restoration. The Ship's force will procure new fluids and refill all tanks at the appropriate time.

WORK ITEM 4: Watertight Closures, Assess

1. SCOPE

1.1 Intent. This work item describes the requirements for the Contractor to perform a condition assessment of all installed watertight closures listed in Table 1.

TABLE 1 - LOCATIONS

WATERTIGHT DOORS LOCATIONS (11)	
1	Mid-Main Deck Stbd 1-27-1 (Passage 1-17-0-L)
2	Mid-Main Deck Port 1-27-2 (Passage 1-17-0-L)
3	FWD DC Locker 1-11-2
4	Aft DC Locker 1-35-1
5	Magazine Room 1-8-1
6	Emergency Generator Room 1-10-1
7	Generator Room 3-35.5-1
8	Passage 2-25.5-0
9	Passage 2-17-0
10	Main Engine Room 3-27-1
11	FWD Aux. Space 2-10-0
WEATHERTIGHT DOORS LOCATIONS (3)	
12	Mid “01” Weather Deck Starboard (Pilot House) 01-22-1
13	Mid “01” Weather Deck Port (Pilot House) 01-22-2
14	Aft “01” Weather Deck (Pilot House) 01-27-0
HATCH LOCATIONS (13)	
15	Forward “01” Weather Deck 1-15-1
16	Pilot House Fwd Lockers 01-19-1
17	Pilot House Fwd Lockers 01-19-2
18	Pilot House Fwd Lockers 01-19-3
19	Pilot House Fwd Lockers 01-19-4
20	Fwd Main Deck Boatswain Storage
21	Fwd Aux. Space 1-6-1
22	Aft Main Deck Main Engine Room 1-34-2
23	Aft Main Deck Generator Room 1-39-2
24	Aft Main Deck Port Steering Gear Room 1-41-1
25	Aft Main Deck Stbd Steering Gear Room 1-41-2
26	Passage 1-16-1
27	Mess Deck 1-17-1
MANHOLE LOCATIONS (2)	
28	Boatswain Storage (Void Space) 1-2-2
29	Gun Foundation

1.2 Government-furnished property.

None.

2. REFERENCES

COAST GUARD DRAWINGS

Coast Guard Drawing 154 WPC 167-201, Rev F, Schedule of Doors, Manholes, and Hatches

Coast Guard Drawing 154B WPC 167-201, Rev -, Schedule of Doors, Manholes, and Hatches

COAST GUARD PUBLICATIONS

Surface Forces Logistics Center Standard Specification 0000 (SFLC Std Spec 0000), 2022, General Requirements

Surface Forces Logistics Center Standard Specification 0740 (SFLC Std Spec 0740), 2022, Welding and Allied Processes

Surface Forces Logistics Center Standard Specification 6310 (SFLC Std Spec 6310), 2022, Requirements for Preservation of Ship Structures

OTHER REFERENCES

None

3. REQUIREMENTS

3.1 General.

3.1.1 CIR.

None.

3.1.2 Tech Rep.

None.

3.1.3 Protective measures. The Contractor must furnish and install all protective measures in accordance with SFLC Std Spec 0000, paragraph 3.3.3 (Vessel component, space, and equipment protection).

3.1.4 Interferences. The Contractor must handle all interferences in accordance with SFLC Std Spec 0000, paragraph 3.3.5 (Interferences).

3.2. Watertight closure assessment and maintenance. The Contractor must operate each watertight closure listed in Table 1 through complete dogging cycle and inspect each for all discrepancies that may cause leaks or improper operation (e.g. loose/missing/damaged parts, wear of hinge pins and striker plates; clogged drain lines, binding and/or difficult operation, closure gaskets that are painted/cracked/deteriorated/uneven/deformed more than 1/8”, gaskets that are improperly joined/sealed, gaskets that join at a radius/corner, missing or damaged grease fittings, damaged knife edges, etc.). Submit a CFR describing all discrepancies and recommended repairs. Apply grease to all intact grease

fittings, file smooth any minor nicks or gouges in knife edges. Refer to Coast Guard Drawing 154 WPC 167-201.

NOTE

If the nick or gouge has a gap greater than 1/16", the knife edge may require weld buildup prior to filing smooth in order to keep the knife edge fair.

3.2.1 Chalk test. Perform a chalk test of all inspected closures in accordance with SFLC Std Spec 0740, Appendix C.

3.2.2 Water hose test. Perform a water hose test of all exterior watertight closure boundaries in accordance with SFLC Std Spec 0740, Appendix C. Interior watertight closures do not require a water hose test.

3.3 Repairs. If a Change Request has been authorized and released by the KO, the Contractor must execute the repairs specified therein.

3.4 Operational test, post repairs. After completion of all work, and in the presence of the COR or designated Coast Guard Inspector, the Contractor must thoroughly test and demonstrate all disturbed or repaired items and shipboard devices have been repaired to be in satisfactory operating condition.

3.5 Assessment deliverables. Within seven (7) days after the completion of the assessment and follow-on repairs, the Contractor must submit a final report to the cutter EO with copy to the COR. The final reports must include:

- Complete list of watertight closures assessed
- List of closures not assessed and the reasons for non-assessment
- Condition found on all assessed closures
- List of repairs accomplished
- List of additional recommended repairs

3.6 Touch-up preservation. The Contractor must prepare and coat all new and disturbed surfaces to match existing adjacent surfaces in accordance with SFLC Std Spec 6310, paragraph 3.1.13 (Touch-ups and minor coating repairs.)

4. NOTES

This section is not applicable to this work item.

WORK ITEM 5: Louver and Damper Assembly, Inspect and Repair

1. SCOPE

1.1 Intent. This work item describes the requirements for the Contractor to open and inspect the designated ventilation accesses as specified below.

TABLE 1 – LIST OF LOUVER ASSEMBLIES DESIGNATED FOR OVERHAUL

PN SEE NOTE 1	DESCRIPTION
P01	STBD Combustion Air
P02	PORT Combustion Air
P03	STBD Generator Supply
P04	PORT Generator Supply
P05	STBD Engine Room Supply
P06	PORT Engine Room Supply
P07	STBD Engine Room Exhaust
P08	PORT Engine Room Exhaust
P09	Emer. Gen. Room Supply (PORT)
P10	Emer. Gen. Room Exhaust (STBD)
P11	Fresh Air Make Up (STBD)
P12	Sanitary Exhaust (STBD)
P13	Galley Hood Supply (STBD)
P14	Galley Hood Exhaust (STBD)
P15	Upper Eng.Room Exhaust (STBD)
P16	Upper Eng.Room Exhaust (PORT)

1 "PN" number ."EQUIPMENT PARTS" table on sheet 1 of Coast Guard Drawing 154WPC 168-201.

1.2 Government-furnished property.

None.

2. REFERENCES

COAST GUARD DRAWINGS

Coast Guard Drawing 154 WPC 168-201, Rev F, Louvers and Covers A&D

Coast Guard Drawing 154 WPC 251-301, Rev D, Combustion Air Diagram

Coast Guard Drawing 154B WPC 251-301, Rev -, Combustion Air Diagram

Coast Guard Drawing 154 WPC 512-301, Rev B, HVAC System Diagram

Coast Guard Drawing 154B WPC 512-301, Rev -, HVAC System Diagram

Coast Guard Drawing 154 WPC 513-301, Rev C, Machinery Ventilation Diagram

Coast Guard Drawing 154B WPC 513-301, Rev -, Machinery Ventilation Diagram

COAST GUARD PUBLICATIONS

Surface Forces Logistics Center Standard Specification 0000 (SFLC Std Spec 0000), 2022, General Requirements

Surface Forces Logistics Center Standard Specification 6310 (SFLC Std Spec 6310), 2022, Requirements for Preservation of Ship Structures

OTHER REFERENCES

None

3. REQUIREMENTS

3.1 General.

3.1.1 CIR. None

3.1.2 Tech Rep. None.

3.1.3 Protective measures. The Contractor must furnish and install all protective measures in accordance with SFLC Std Spec 0000, paragraph 3.3.3 (Vessel component, space, and equipment protection).

3.1.4 Interferences. The Contractor must handle all interferences in accordance with SFLC STD SPEC 0000, paragraph 3.3.5 (Interferences).

3.2 Louver removal. The Contractor must:

3.2.1 Remove interferences to gain reasonable access to the ventilation plenum/trunk designated in Table 1.

3.2.2 Inspection. Inspect louvers, dampers, actuators, thermistors, etc., as applicable. Operate each damper, verify damper assemblies move smoothly with no binding through the full range of operation. Verify vanes fully open and close. For those dampers with thermistor protection verify proper operation. Verify damper actuators remain stationary when moving the damper. Verify position indicators (Local/Remote) operate accurately, as applicable. Submit a CIR describing all discrepancies and recommended repairs.

3.2.3 Repairs. If the KO releases a Change Request perform all authorized repairs specified therein.

3.2.4 Preservation, reassembly and testing. After all repairs are completed, touch-up preserve all previously painted surfaces as described in 3.3 below. Reassemble all previously disassembled components while renewing all wearing-components (e.g. seals, gaskets, o-rings, filters, etc.). Renew all fasteners. In the presence of the COR/PE, cycle or operate all moving parts, demonstrating that all disturbed and affected equipment is operating properly. Submit a CFR indicating final acceptance of all repair work.

3.3 Touch-up preservation. The Contractor must prepare and coat all new and disturbed surfaces to match existing adjacent surfaces in accordance with SFLC Std Spec 6310, paragraph 3.1.13 (Touch-ups and minor coating repairs.).

4. NOTES

This section is not applicable to this work item.

WORK ITEM 6: P-100 Fire Pump, Relocation

1. SCOPE

1.1 Intent. This work item describes the requirements for the Contractor to fabricate new pump foundations and relocate the P-100 Fire Pump.

1.2 Government-furnished property.

None.

2. REFERENCES

COAST GUARD DRAWINGS

Coast Guard Drawing 154 WPC 330-301, Rev G, 120V System Deck Plan

Coast Guard Drawing 154B WPC 180-260, Rev -, Foundation A&D Module 60

Coast Guard Drawing 154B WPC 601-302, Rev B, General Arrangement

COAST GUARD PUBLICATIONS

Surface Forces Logistics Center Standard Specification 0000 (SFLC Std Spec 0000), 2022, General Requirements

Surface Forces Logistics Center Standard Specification 0740 (SFLC Std Spec 0740), 2022, Welding and Allied Processes

Surface Forces Logistics Center Standard Specification 3041 (SFLC Std Spec 3041), 2022, Shipboard Electrical Cable Test

Surface Forces Logistics Center Standard Specification 3042 (SFLC Std Spec 3042), 2022, Shipboard Electrical Cable Removal, Relocation, Splice, Repair, and Installation

Surface Forces Logistics Center Standard Specification 6310 (SFLC Std Spec 6310), 2022, Requirements for Preservation of Ship Structures

OTHER REFERENCES

None

3. REQUIREMENTS

3.1 General.

3.1.1 CIR.

None.

3.1.2 Tech Rep.

None.

3.1.3 Protective measures. The Contractor must furnish and install all protective measures in accordance with SFLC Std Spec 0000, paragraph 3.3.3 (Vessel component, space, and equipment protection).

3.1.4 Interferences. The Contractor must handle all interferences in accordance with SFLC Std Spec 0000, paragraph 3.3.5 (Interferences). Known interferences include, but are not limited to the following:

- Bulkhead insulation
- Piping
- Wiring

3.2 Pump(s) relocation. The Contractor must remove the P-100 fire pump located on the foc'sle and relocate the fire pump to the starboard side fantail. Refer to Figure 1 in section 4 Notes and Coast Guard Drawing 154B WPC 601-302 for each pump location.

3.2.1 Pump foundation, removal. The Contractor must remove and discard the forward P-100 pump foundation located on the foc'sle, grind the deck smooth.

3.2.2 Pump foundation, fabrication. The Contractor must fabricate and install one new pump foundation for the P-100 pump. Refer to Figure 2 in section 4 Notes and Coast Guard Drawing 154B WPC 180-260. All welding procedure must be in accordance with SFLC Std Spec 0740.

3.2.3 Pump cover. The Contractor must fabricate and install a new easily removeable rigid weathertight pump cover for the starboard P-100 pump.

3.3 P-100 pump heater, electrical. The Contractor must install a new 120-volt isolated circuit near the new P-100 pump location. Use Coast Guard Drawing 154 WPC 320-301 as reference.

3.3.1 Electrical work. The Contractor must accomplish all electrical work in accordance with SFLC Std Spec 3042, and test cables in accordance with SFLC Std Spec 3041. Utilize the existing wire ways for new cable runs as much as possible.

3.4 Touch-up preservation. The Contractor must prepare and coat all new and disturbed surfaces to match existing adjacent surfaces in accordance with SFLC Std Spec 6310, (Touch-ups and minor coating repairs.)

4. NOTES

4.1 New pump location. Pump(s) new location on fantail.

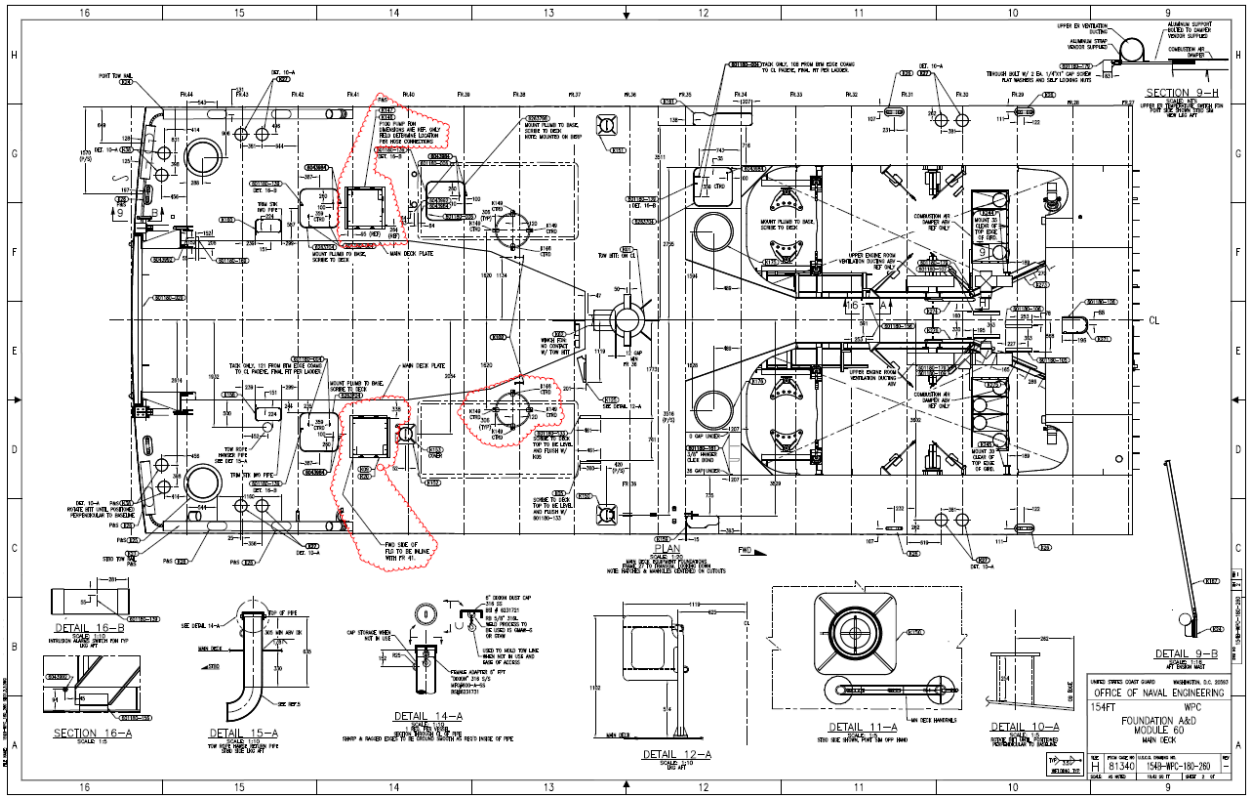

FIGURE 1 – NEW LOCATION OF P-100 PUMP

4.2 P-100 pump foundation.

BILL OF MATERIAL

PART NAME	QTY	DESCRIPTION	PART SIDE	NEST	WEIGHT (KG)	LENGTH
601180K146-001	1	PLATE 3/16" SST 316-L	P	WPC6003SST001	6.38	N/A
601180K146-002	1	PLATE 3/16" SST 316-L	P	WPC6003SST001	5.72	N/A
601180K146-003	1	PLATE 3/16" SST 316-L	P	WPC6003SST001	5.11	N/A
601180K146-004	1	PLATE 3/16" SST 316-L	P	WPC6003SST001	4.54	N/A
601180K146-005	4	PLATE 3/8" SST 316-L	P	WPC6006sst001	0.82	N/A
601180K146-006	8	PLATE 3/16" SST 316-L	P	WPC6003SST001	0.03	N/A
601180K146-007	4	PLATE 3/16" SST 316-L	P	WPC6003SST001	0.07	N/A

PIPING PARTS ONLY

BSI NO.	QTY	DESCRIPTION
5096311	1	COUPLING 3/4" 3000# SCRD S/S-316L
5386700	1	PLUG 3/4 3000-6000# SCRD SQUARE HEAD S/S-316

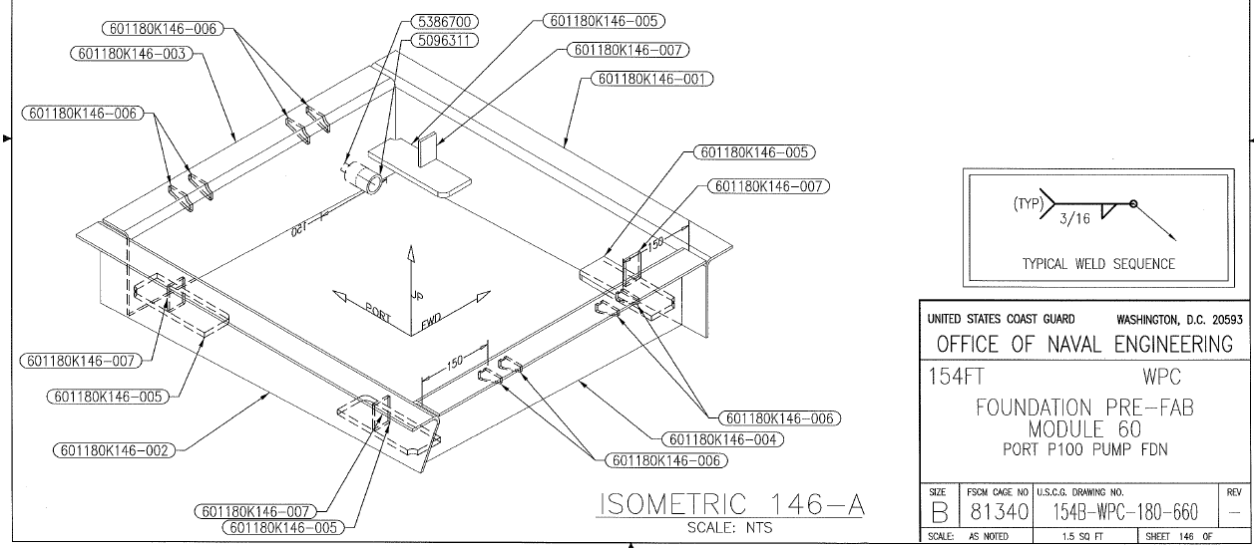

FIGURE 2 – P-100 PUMP FOUNDATION

WORK ITEM 7: Propulsion Shafting System, Inspect and Repair

1. SCOPE

1.1 Intent. This work item describes the requirements for the Contractor to perform inspections and maintenance on the propulsion shafting system. Table 1 below designates the maintenance that must be performed on the various components/sides, and that maintenance is fully described in section 3 below.

TABLE 1 – MAINTENANCE TO BE PERFORMED

		DESCRIPTION
YES	1	PORT "Propeller Inspections" (3.2 below)
YES	2	PORT "Shaft Remove/Reinstall" (3.3 below)
YES	3	PORT "Shaft Seal Overhaul" (3.4 below)
YES	4	PORT "Stern Tube Component Maintenance" (3.5 below)
YES	5	STBD "Propeller Inspections" (3.2 below)
Yes	6	STBD "Shaft Remove/Reinstall" (3.3 below)
YES	7	STBD "Shaft Seal Overhaul" (3.4 below)
YES	8	STBD "Stern Tube Component Maintenance" (3.5 below)

NOTE: If "YES" is specified in the left column then the corresponding maintenance must be performed on the designated shaft/prop/stern-tube. If "NO" is specified then do not perform that corresponding maintenance.

1.2 Government-furnished property.

MTI	ITEM DESCRIPTION	NSN/PN	QTY	ESTIMATED COST ($/UNIT)
Y	**Propeller Shaft	NSN: 2010-01-605-7516	2 ea.	103,000
Y	**LH Propeller	NSN: 2010-01-628-0276 PN: 531915	1 ea.	190,000
Y	**RH Propeller	NSN: 2010-01-627-9761 531914	1 ea.	190,000
N	**Stave Kit (each kit contains 8 reg. Romor staves, 2 rubber locking staves, 2 Romor staves w/keeper slot)	NSN: 3120-01-605-7400 P/N: 80920203000003	4 kt	2430
N	**FWD Bearing Split External Retaining Ring Kit (each kit contains 1ea retaining ring, 10ea socket head cap screws)	NSN: 3120-01-605-7345 P/N: 80920203000004	2 kt	1970

N	**AFT Bearing Split External Retaining Ring Kit (each kit contains 1ea retaining ring, 10ea socket head cap screws)	NSN: 3120-01-605-7510 P/N: 80920203000005	2 kt	2575
N	**Kit, Installation Part-Replacement (see note 4.1 for kit contents)	NSN: 2010-01-629-4693 P/N: 950700	2 kt	1900
Y	*Kit, Propeller – Removal/Installation Tools and Equipment (see note 4.2 for kit contents)	NSN: 2010-01-632-2198/ P/N: 999120	1 kt	22,970
N	**Shaft Seal Overhaul Kit (see table 7-4 of TP-8081, pg 7-8, Service Kit B)	NSN:5330-01-618-5248 P/N: H76214-6	2 kt	5650.93
N	**Shaft Seal Overhaul Kit (see table 7-5 of TP-8081, pg 7-9, Service Kit C)	NSN: 5330-01-618-5276 P/N: H76214-8	2 kt	4896
N	Anodes, Zinc (stern tube)	NIIN: 01-644-5483 P/N: Z0020202H3	16 ea.	50
N	NUT, SELF LOCKING (shaft to gear box coupling hub)	NIIN: 01-722-2196 P/N: 10493101	40 ea	10.76
N	BOLT, MACHINE (shaft to gear box coupling hub)	NIIN: 01-722-2178 P/N: 10492895	40 -ea	35,99

***Government-loaned property, which must be returned to the vessel upon completion of the availability.**
****New or refurbished equipment that the Government may provide for installation in place of existing equipment.**
*****Government-furnished property, which is to be supplied by either the vessel or the C4IT Service Center.**

2. REFERENCES

COAST GUARD DRAWINGS

Coast Guard Drawing 154 WPC 161-301, Rev C, Skegs and Stern Tubes Support Structures

Coast Guard Drawing 154B WPC 161-301, Rev -, Skegs and Stern Tubes Support Structures

Coast Guard Drawing 154 WPC 204-301, Rev F, Equipment Removal Plan

Coast Guard Drawing 154B WPC 204-301, Rev -, Equipment Removal Plans

Coast Guard Drawing 154 WPC 243-201, Rev D, Main Propulsion Shafting A&D

Coast Guard Drawing 154B WPC 243-201, Rev A, Main Propulsion Shafting A&D

Coast Guard Drawing 154 WPC 245-304, Rev B, Propeller Plans and Data Six Blade Propeller

Coast Guard Drawing 154B WPC 245-301, Rev -, Propeller Plans and Data Six Blade Propeller

Coast Guard Drawing 154 WPC 245-901, Rev -, Propeller CAD Model to Support CMM Scan (IGS File)

COAST GUARD PUBLICATIONS

Coast Guard Technical Publications (TP) 6632, SWBS 6633, Jul 2015, Reduction Gear – Model ZF 280-1

Coast Guard Technical Publication (TP) 8081A, SWBS 243, Apr 2018, Stern Tube Seal with Emergency Packing Gland

Coast Guard Technical Publication (TP) 8913A, SWBS 086, Mar 2020, Technical Repair Standard for Propellers

Surface Forces Logistics Center Standard Specification 0000 (SFLC Std Spec 0000), 2022, General Requirements

Surface Forces Logistics Center Standard Specification 6310 (SFLC Std Spec 6310), 2022, Requirements for Preservation of Ship Structures

OTHER REFERENCES

American Bureau of Shipbuilding (ABS) Rules for Survey After Construction, Part 7

3. REQUIREMENTS

3.1 General.

3.1.1 CIR. The Contractor must submit a CIR for the inspections listed in the following paragraph(s):

- 3.6. Submit all initial inspection reports.

3.1.2 Tech Rep. None.

3.1.3 Protective measures. The Contractor must furnish and install all protective measures in accordance with SFLC Std Spec 0000, paragraph 3.3.3 (Vessel component, space, and equipment protection).

3.1.4 Interferences. The Contractor must handle all interferences in accordance with SFLC Std Spec 0000, paragraph 3.3.5 (Interferences).

3.1.5 Refer to all references in Section 2 above.

3.2 Propeller inspections. The Contractor must perform the following to each designated propeller (i.e. marked “YES” in Table 1 above, if marked “NO” then do not perform this work). These inspections may be performed without removing the propeller from the shaft.

3.2.1 Visual inspections. Clean the propeller to a bright metal finish. Visually inspect the propeller in its entirety to identify all discrepancies (e.g. bends, deformation, torn material, and/or missing material, out-of-tolerance discontinuities per ABS Part 7 Appendix Section 10 Table 1, etc.) and any other abnormality that may negatively affect operation.

3.2.2 3-dimensional (3-D) scans. Using a portable 3-dimensional coordinate measuring machine (CMM), accurate to within 0.001”, scan all visible hub and blade surfaces of the propeller. Then accomplish the following:

- Under the guidance of ISO 484/2 for **CLASS 1**, conduct the inspections per Sections 7a, 7b, 7c, 7d, 8, 9, 11, 12.2, 12.3, 13 of ISO 484/2. Pitch radii must be measured at 0.3 R, 0.4 R, 0.5 R, 0.6 R, 0.7 R, 0.8 R, 0.9 R, and 0.95 R.
- Calculate all required ISO 484/2 Class I tolerances using the Government-furnished propeller CAD model (Coast Guard Drawing 154 WPC 245-901) for comparison against inspection

results

- Provide a report for each inspection detailing the results versus tolerance, highlighting those measurements that are out-of-tolerance.
- provide colored "heat map" images of actual dimensions superimposed over the CAD model showing where each measurement deviates from the CAD model dimensions by a two-color gradient (pass or fail)

3.2.3 For each scanned propeller, present a recommendation for the reuse or renewal. Submit the recommendation, all measured and calculated data, and associated images via CFR. All data, final report and recommendations must also be sent via compact disc (CD) to the following address:

Patrol Boat Product Line
ATTN: SES Chief
300 East Main Street, Suite 600
Norfolk, VA 23510

CAUTION!

Do NOT perform a 3-D scan on a propeller that has failed a visual inspection; perform the scan on the new Government-furnished propeller after it has been installed on the shaft.

3.2.4 If requested by the KO, submit evidence proving that at least one on-site technician has successfully operated the scanning equipment in at least one prior similar contract, and has prior experience performing all of the scanning tasks specified herein.

3.3 Shaft remove/reinstall. The Contractor must perform the following to each designated shaft (i.e. if marked "YES" in Table 1 above, if marked "NO" then do not perform this work). If requested by the KO, submit evidence that at least one on-site technician has successfully performed alignment measurements using optical or laser systems in a prior contract.

3.3.1 Waterborne shaft seal inspection. Prior to haul-out, while using TP 8081 as guidance, the Contractor must take shaft-to-shaft seal perpendicularity and concentricity measurements for shafts planning to be removed. Submit a CIR.

NOTE

The emergency inflatable shaft seal will need to be in good operating order to take these measurements. The water may not fully stop coming in even with the inflated emergency seal.

3.3.2 Shaft inspections.

3.3.2.1 Prior to removing the shaft from the vessel, the KTR must assess the existing shaft alignment between the shaft coupling and reduction gear coupling (e.g. gap/sag, feeler gauges, laser alignment) to establish a baseline measurement. Upon completing all work, the same alignment assessment method must be used again to record readings and compare against the baseline measurements. Submit a CFR.

3.3.2.2 Remove the shaft from the vessel, mount the shaft on a machine supported on precision roller assemblies at two points (only – intermediary supports are prohibited), each no more than 24 inches from

their respective end of the shaft. Slowly spin the shaft for at least 2hrs to remove all non-permanent bend/set (elastic hysteresis). Identify all discrepancies and determine if the shaft is satisfactory for reuse or if renewal is warranted (e.g. significantly bent, journals damaged, etc.). Support findings by taking complete shaft journal dimensions and propulsion shaft run-out readings via dial indicator survey at the small and large ends of each taper, at the fore and aft ends of each bearing position, at three equally spaced locations between the bearings, and at three equally spaced locations between the intermediate bearing and coupling taper. Mark each station at the position of maximum run-out on the periphery of the shaft. Record all data on the form at the end of this work item (see 4.3). All shaft inspections and measurements must be taken in the presence of the COR or the COR's designated Coast Guard inspector.

3.3.3 Bearing inspections. Visually inspect all stern tube bearings staves for all discrepancies (e.g. excessive wear, unusual wear patterns, etc.). Staves with greater than 0.025" wear must be renewed.

3.3.4 Alignment survey. Minimize thermal effects by performing measurements late in the evening or before sunrise. Using optical or laser methods, establish a reference line square to, and through the center of, the reduction gear output flange. Provide a detailed report indicating the vertical and horizontal offsets of the centers of the following components from the reference line, and identify and record all discrepancies and repair recommendations (if any):

- Shaft seal flange ("ADAPTOR PL")
- Forward end of the FWD stern tube bearing/housing
- Aft end of the FWD stern tube bearing/housing
- Forward end of the Prop End stern tube bearing/housing
- Aft end of the Prop End stern tube bearing/housing

3.3.5 Shaft-To-Gearbox Coupling Fasteners. Renew all shaft-to-gearbox coupling fasteners (self-locking). NOTE: If listed in the GFP list (1.2 Government-furnished property.) the Govt will provide.

3.4 Shaft seal overhaul. The Contractor must perform the following to each designated shaft seal (i.e. marked "YES" in Table 1 above, if marked "NO" then do not perform this work). Clean and visually inspect all non-expendable shaft seal components to identify all discrepancies. Renew all expendable shaft seal components. If the shaft is designated for removal in Table 1 above then use Service Kit "B" H76214-6 (non-split), otherwise use Service Kit "C" H76214-8 (split). Before cutter is un-docked, and in the presence of the COR or designated CG representative, test shaft seal and inflatable shaft seal IAW section 4.4 and 8.10 of TP 8081A. Submit CFR. If requested by the KO, submit evidence that one or more on-site technicians has successfully overhauled, renewed, or repaired the shaft face seal, or a similar model of face seal manufactured by the same company in a prior contract, and further describe all knowledge, experience, and training contributing to being qualified to disassemble/reassemble the shaft face seal.

NOTE

If the perpendicularity, concentricity, and/or stern tube face flatness measurements are not within the tolerances as prescribed in TP 8081, submit the results to the KO for adjudication. Out-of-tolerance measurements may not prevent reinstalling the affected shaft seal(s) as the decision will not be solely based on measured data.

3.5 Stern-tube component maintenance. The Contractor must perform the following to each designated stern tube (i.e. marked "YES" in Table 1 above, if marked "NO" then do not perform this work).

3.5.1 Remove the rope guard and all stern tube access covers. Remove all growth and fouling from all accessible stern tube and shaft areas prior to performing inspections. Visually inspect all exposed surfaces (e.g. shafts, shaft bearing staves, stern tube surfaces and coatings, etc.) to the greatest extent practicable for all discrepancies (e.g. damage, corrosion, excessive and/or abnormal wear, failed coatings, etc.). Stern-tube coatings and structural inspections must be performed in the presence of the COR or the COR's designated Coast Guard inspector. Renew all stern tube zinc anodes; if not already present install 12 each additional zinc anodes as shown in paragraph 4.4 (Arr & Dets stern tube zinc anodes) below. Renew the propeller zinc plate and associated fasteners.

3.5.2 Survey and record each stern tube flange face flatness and submit a CFR.

3.6 Submit all initial inspection reports. For all inspections performed above, **Submit a CIR** detailing all findings, all discrepancies noted, and describe recommended repairs that will correct those discrepancies, with supporting justification. If components are satisfactory and no further repairs are recommended (e.g. no prop/shaft renewal or repair required, no stern-tube coatings repairs required, etc.) then indicate that in the report, with supporting justification. Pending inspection results, a Change Request may be released by the KO to perform repairs.

3.7 System restoration. After completion of all inspections, maintenance, and KO authorized repairs, the Contractor must re-assemble all disassembled components and restoring the entire system to its normal operating condition in preparation for testing.

3.8 Operational tests – post repairs. During sea trials, the Contractor must demonstrate proper operation of both propeller shaft systems via sea trials throughout the entire range of running speeds and directions. Verify no unusual noise, vibrations, binding, shaft seal anomalies, etc. exist in each propulsion system. Submit a CFR acknowledging satisfactory completion of all testing.

4. NOTES

4.1 Contents of Government Furnished "Kit, Installation Part-Replacement" See Coast Guard Drawing 154WPC 245-304.

QTY PER PROP	PC#	PN	DESCRIPTION	MATL	PRICE EA	PRICE PER SET
1	3	950733	Anode Zinc Plate	Zinc	$413.26	$413.26
1	4	950724	Cover Plate	2205 SS	$83.54	$83.54
1	5	950726	Retaining Ring	304L SS	$180.50	$180.50
1	6	950746	"O" Ring Fwd End FW Cap	Buna-N	$27.84	$27.84
1	7	950744	"O" Ring Aft End FW Cap	Buna-N	$27.16	$27.16
4	8	950756	M16 X 2 X 50mm SS SHCS	SS	$5.70	$22.80
3	9	950755	M10 X 1.5 X 25mm SS SHCS	SS	$1.46	$4.37
2	10	950714	SS Hex "O" Ring Plug	SS	$41.54	$83.09
3	11	950738	Lifting Eye Bolt	Carbon Steel	$60.98	$182.93
6	12	950736	Plug - Lifting Hole	NiBrAl	$73.72	$442.32
1	13	950748	"O" Ring-Hub Fwd Propeller	Buna-N	$11.34	$11.34
3	14	950759	Anti Vibration Lock Washer	SS	$10.76	$32.28
8	15	950757	M6 X 1 X 20mm SS SHCS	SS	$1.28	$10.26

4.2 Contents of Government Furnished "Kit, Propeller – Removal/Installation Tools and Equipment"

QTY	PC#	PN	DESCRIPTION	MATL	PRICE EA	PRICE PER SET
1		999130	SPANNER WRENCH			
1		950742	SPACER]INSTALLATION			
1		999122	HYD. INSTALLATION NUT			
1		999124	SKF HYDRAULIC PUMP 15,000 PSI			
2		999125	ENERPAC HYDRAULIC PUMP 10,000 PSI			
1		999142	MCDANIEL GAGE			
1		999144	HYD.SWIVEL FITTING			
1		999146	HYD. STRAIGHT FITTING			
2		999148	WASHER]HYD. FITTING			
2		999135	SKF QUICK CONNECTING NIPPLE			
2		999136	SKF QUICK CONNECTING COUPLING			
2		999137	10-FOOT WEAT HYDRAULIC HOSE			
1		999128	INSTRUCTION MANUAL			
			INST. ROD] HYD. INST. NUT(5/8 DIA X 9			

4.3 Shaft Measurement Forms (below).

USCGC ROBERT G. WARD (WPC-154) DRYDOCK AVAILABILITY FY2027

CIRCLE ONE: PORT STARBOARD - SHAFT RUN-OUT MEASUREMENT FORM

VESSEL NAME AND HULL NUMBER: _____

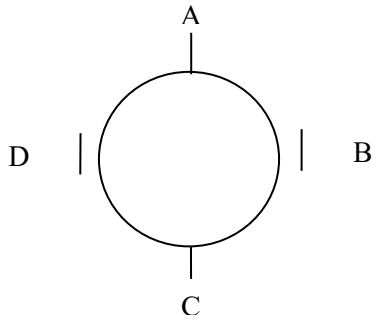

POINTS ALONG LENGTH	A	B	C	D	TOTAL INDICATED RUN-OUT (TIR)
Aft Taper (small end)					
Aft Taper (large end)					
Aft Bearing Journal (aft end)					
Aft Bearing Journal (fwd end)					
Aft-Int Brg Journal Location 1					
Aft-Int Brg Journal Location 2					
Aft-Int Brg Fwd Journal Location 3					
Int Bearing Journal (aft end)					
Int Bearing Journal (fwd end)					
Int Journal-Taper Location 1					
Int Journal-Taper Location 2					
Int Journal-Taper Location 3					
Shaft Seal					
Fwd Taper (large end)					
Fwd Taper (small end)					

Inspection Facility: _____ Date and Time:_____

Inspector Signature: _____

4.4 Arr & Dets stern tube zinc anodes. Arrangement and details showing new stern tube zinc anodes. This adds an additional 12 ea 2.8# zinc anodes (6 ea. per stern tube) to the shaft bearing access covers.

MATERIALS LIST

	PIECE NO	QTY	UNIT	MFR #/NSN	DESCRIPTION	MATERIAL	HULL APPLICABILITY	
H	1	23' 4-1/2" PER SHAFT			PIPE SCH 80 SMLS 14" NOMINAL	ASTM A106GRB		
	2	6 SQ FT		BSI# 1725556	GASKET :1/8" X 48" WIDE ROLL	DIAPHRAGM		
	3	56			BOLT: 3/8"-16 UNC X 2-3/4" LONG HEX HEAD	SST TYPE 316		
	4	52			NUT: 3/8"-16 UNC HEX HEAD	SST TYPE 316		
	5	208			FLATWASHER: 3/8"	SST TYPE 316	1149-ON	
		160			FLATWASHER: 3/8"	SST TYPE 316	1132-1148	A1
G	6	2			STRAP GROUNDING TYPE I BOND STRANDED WIRE CABLE 12" MIL-S-1310 REV-G S/S MFG#T1G12 "RT&D"	S/S		
	7	6 SQ FT			PLATE: 3/4" THICK	SST TYPE 316L		
	8	2		BSI# 6116515 GALVOTEC ALLOYS INC.	22.5# ZINC ALLOY ANODE DWG. - Z0220205F3 OR EQUAL	ZINC		
	9	8			LOCKWASHER: 3/8"	SST TYPE 316		
	10	8			WELD STUD: 3/8"-16 UNC DIA X 2-1/4" LG	SST TYPE 316L		
	11	16"			FLATBAR: 1-1/2" X 3/8" THICK	SST TYPE 316L		
	12	4			NUT: 1/2"-13 UNC HEX HEAD	SST TYPE 316		
	13	4			FLATWASHER: 1/2"	SST TYPE 316		
	14	4			LOCKNUT: 1/2"-13 UNC	SST TYPE 316		
F	15	4			WELD STUD: 1/2"-13 UNC DIA X 2-1/4" LG	SST TYPE 316L		
	16	10 SQ FT			PLATE: 1/4" THICK	ALUM ASTM H-116		
	17				NOT USED			
	18	2		BSI# 6209653	SHAFT SEAL ADAPTER PLATE - 62mm THK X 386mm OD. X 216mm ID.	SST TYPE 316L ASTM A403		
	19	10'		BSI# 6161057	TUBING MECHANICAL 16" (406.4mm) X 8" (203.2mm) (4 INCH WALL) STL-A106B	STEEL A106B		
	20	7'-0"			PIPE SCH 40 SMLS 12" NOMINAL	SST TYPE 316L		
	21	32			SCREW CAP: 3/8" X 1-1/4" UNC FLAT HEAD SOCKET COUNTERSUNK ANSI B18.3 ASTM F879 CONDITION CW TYPE 316	B18.3 SST TYPE 316		
	22	A/R			BEESWAX			
	23	A/R			PLATE: 3/8" THICK	ASTM AH36		
E	24	116			LOCKNUT: 3/8"-16 UNC HEX HEAD	SST TYPE 316	1149-ON	
		100			LOCKNUT: 3/8"-16 UNC HEX HEAD	SST TYPE 316	1132-1148	A1
	25	28		BSI# 6116590 GALVOTEC ALLOYS INC.	2.8# ZINC ALLOY ANODE DWG. - Z0020202H3 OR EQUAL	ZINC	1149-ON	
		16		BSI# 6116590 GALVOTEC ALLOYS INC.	2.8# ZINC ALLOY ANODE DWG. - Z0020202H3 OR EQUAL	ZINC	1132-1148	A1
	26	60			WELD STUD: 3/8"-16 UNC DIA X 1-1/2" LG	SST TYPE 316L	1149-ON	
		44			WELD STUD: 3/8"-16 UNC DIA X 1-1/2" LG	SST TYPE 316L	1132-1148	A1
	27	2"			PIPE SCH 40 SMLS 3" NOMINAL	SST TYPE 316L SMLS ASTM 312		
	28	2		BSI# 5091303	HALF COUPLING 1	SST TYPE 316L		
	29	A/R		BSI# 5364705	PIPE S/S A312 SMLS 316 316L COUPS SCHE 80 000 1 INCH 170PWU	SST TYPE 316L		

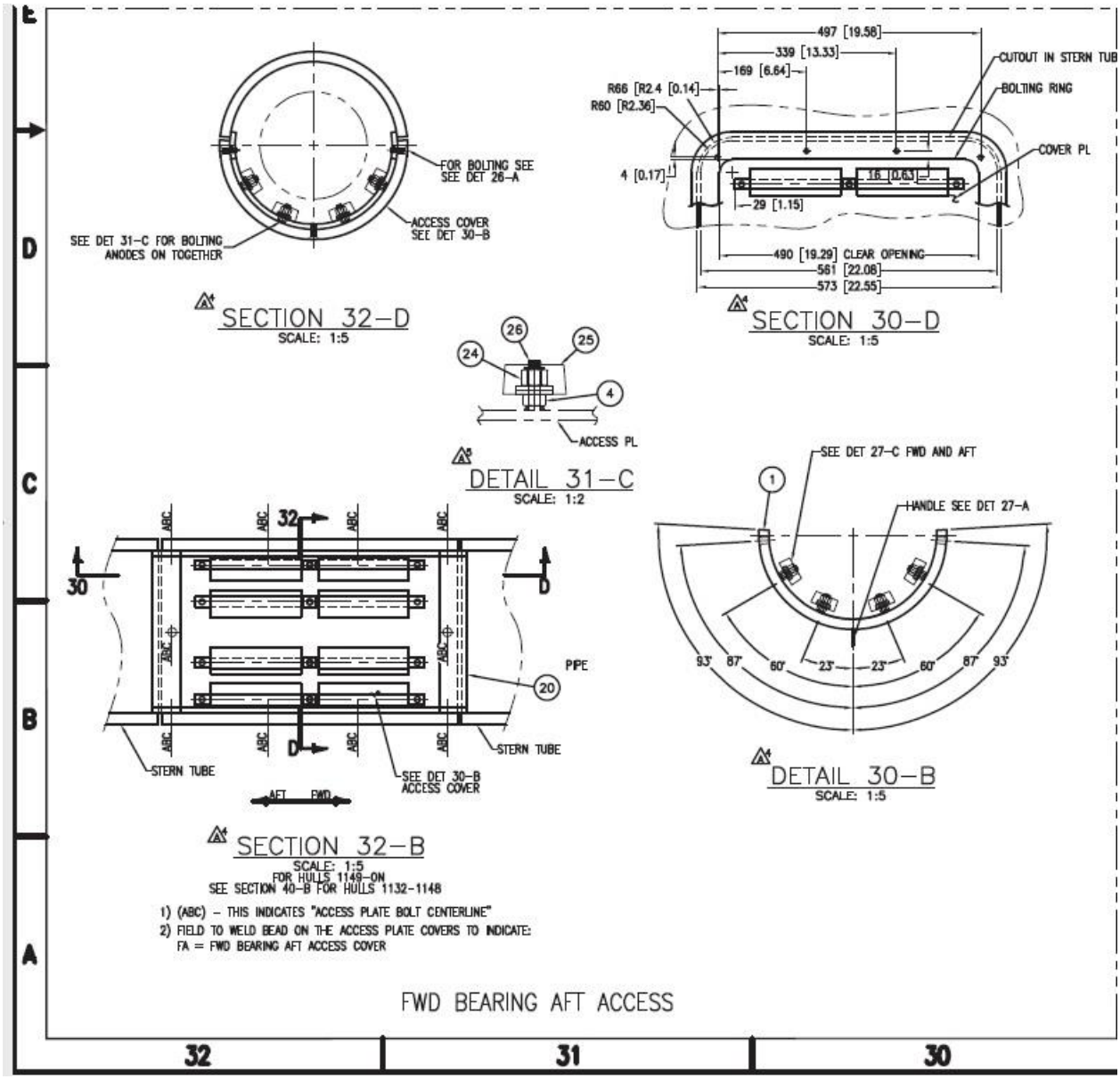
FOR BOLTING SEE SEE DET 26-A
ACCESS COVER SEE DET 30-B
SEE DET 31-C FOR BOLTING ANODES ON TOGETHER
SECTION 32-D
SCALE: 1:5
497 [19.58]
339 [13.33]
169 [6.64]
R66 [R2.4 [0.14]
R60 [R2.36]
CUTOUT IN STERN TUB
BOLTING RING
COVER PL
4 [0.17]
16 [0.63]
29 [1.15]
490 [19.29] CLEAR OPENING
561 [22.08]
573 [22.55]
SECTION 30-D
SCALE: 1:5
ACCESS PL
DETAIL 31-C
SCALE: 1:2
SEE DET 27-C FWD AND AFT
HANDLE SEE DET 27-A
93° 87° 60° 23° 23° 60° 87° 93°
DETAIL 30-B
SCALE: 1:5
PIPE
STERN TUBE
SEE DET 30-B ACCESS COVER
AFT FWD
SECTION 32-B
SCALE: 1:5
FOR HULLS 1149-ON
SEE SECTION 40-B FOR HULLS 1132-1148
1) (ABC) - THIS INDICATES "ACCESS PLATE BOLT CENTERLINE"
2) FIELD TO WELD BEAD ON THE ACCESS PLATE COVERS TO INDICATE:
FA = FWD BEARING AFT ACCESS COVER
FWD BEARING AFT ACCESS
32
31
30

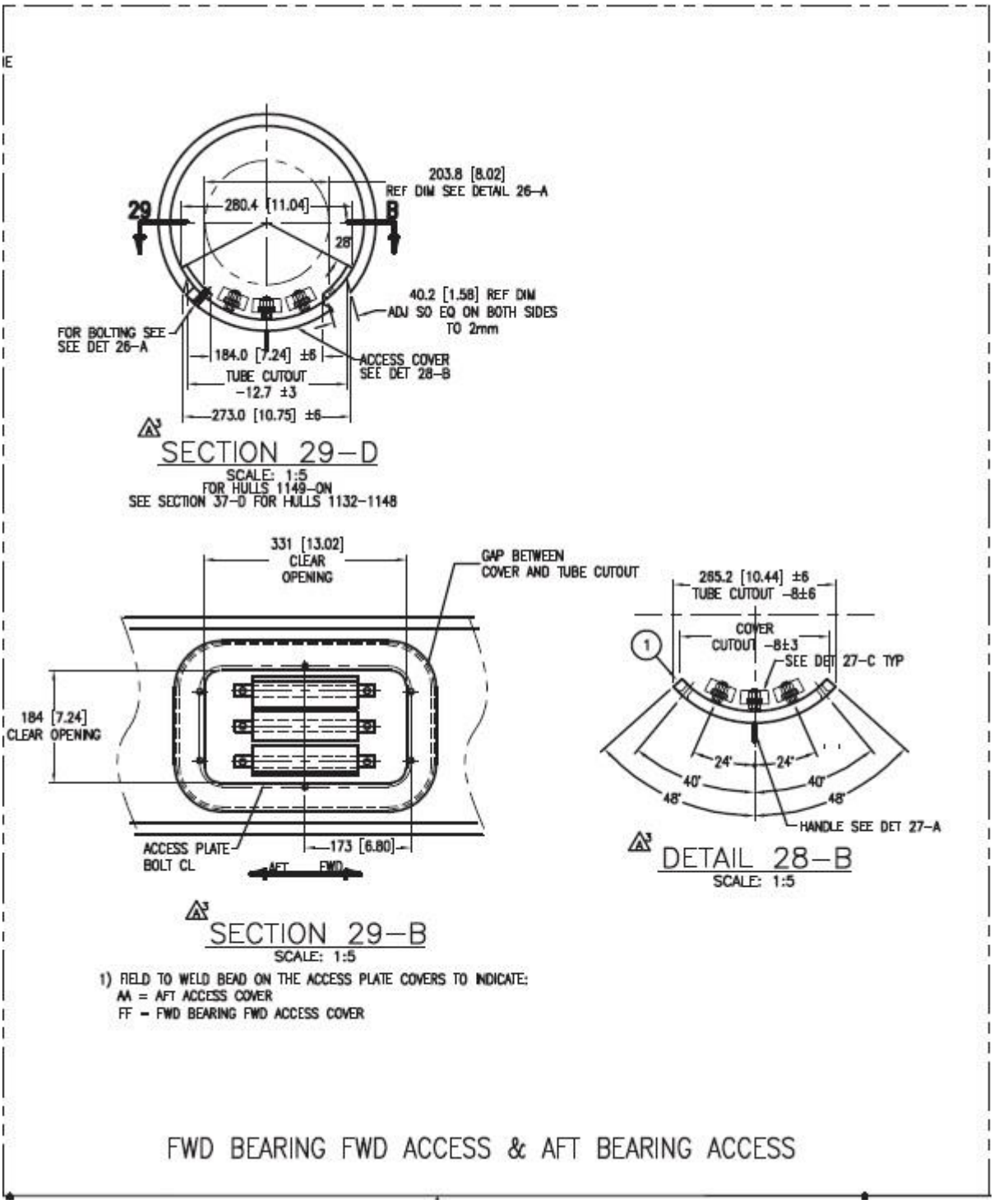
203.8 [8.02]
REF DIM SEE DETAIL 26-A
280.4 [11.04]
29
B
28°
40.2 [1.58] REF DIM
ADJ SO EQ ON BOTH SIDES
TO 2mm
FOR BOLTING SEE
SEE DET 26-A
184.0 [7.24] ±6
ACCESS COVER
SEE DET 28-B
TUBE CUTOUT
-12.7 ±3
273.0 [10.75] ±6
SECTION 29-D
SCALE: 1:5
FOR HULLS 1149-ON
SEE SECTION 37-D FOR HULLS 1132-1148
331 [13.02]
CLEAR
OPENING
GAP BETWEEN
COVER AND TUBE CUTOUT
184 [7.24]
CLEAR OPENING
ACCESS PLATE
BOLT CL
173 [6.80]
AFT
FWD
SECTION 29-B
SCALE: 1:5
265.2 [10.44] ±6
TUBE CUTOUT -8±6
COVER
CUTOUT -8±3
1
SEE DET 27-C TYP
24°
24°
40°
40°
48°
48°
HANDLE SEE DET 27-A
DETAIL 28-B
SCALE: 1:5
1) FIELD TO WELD BEAD ON THE ACCESS PLATE COVERS TO INDICATE:
AA = AFT ACCESS COVER
FF = FWD BEARING FWD ACCESS COVER
FWD BEARING FWD ACCESS & AFT BEARING ACCESS

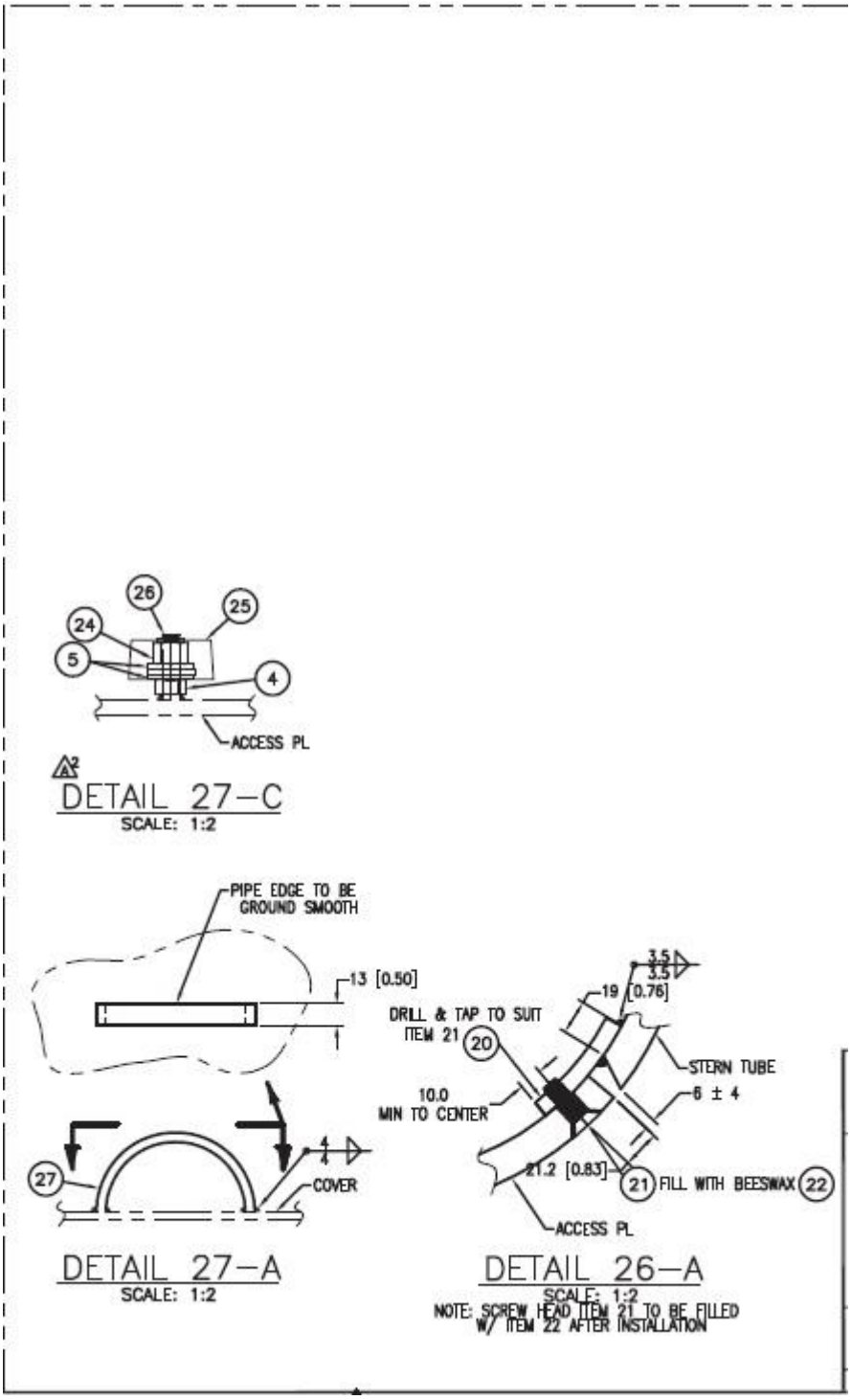
26
25
24
5
4
ACCESS PL
DETAIL 27-C
SCALE: 1:2
PIPE EDGE TO BE GROUND SMOOTH
13 [0.50]
27
4
4
COVER
DETAIL 27-A
SCALE: 1:2
3.5
3.5
3.5
19 [0.76]
DRILL & TAP TO SUIT ITEM 21
20
STERN TUBE
10.0 MIN TO CENTER
6 ± 4
21.2 [0.83]
21
FILL WITH BEESWAX
22
ACCESS PL
DETAIL 26-A
SCALE: 1:2
NOTE: SCREW HEAD ITEM 21 TO BE FILLED W/ ITEM 22 AFTER INSTALLATION

WORK ITEM 8: ASW/Firemain System Components, Renew/Overhaul

1. SCOPE

1.1 Intent. This work item describes the requirements for the Contractor to overhaul or renew various sea water system components (e.g. valves, strainers, fasteners, seals, etc.), and otherwise identify all discrepancies with the associated piping/components.

1.1.1 Valves designated for overhaul or renewal.

	TYPE	SIZE (IN)	ITEM	STYLE	RATED PRESSURE CLASS (#)
1	Butterfly	10	#2 MDE R/W Sea Chest	Lug	200
2	Butterfly	10	#1 MDE R/W Sea Chest	Lug	200
3	Butterfly	10	#1 MDE R/W SUP Valve	Wafer	200
4	Butterfly	10	#2 MDE R/W SUP Valve	Wafer	200
5	Butterfly	4	#2 Aux Cooling Pump Suction	Wafer	200
6	Butterfly	4	#1 Aux Cooling Pump Suction	Wafer	200
7	Butterfly	3	#2 SSDG Strainer Inlet	Wafer	200
8	Butterfly	3	#1 SSDG Strainer Inlet	Wafer	200
9	Butterfly	3	#1 SSDG Suction	LUG	200
10	Butterfly	3	#2 SSDG Suction	LUG	200
11	Butterfly	4	#1 Firepump Suction FMCOV 3-9-1 (fwd aux)	LUG	200
12	Butterfly	3	P-100 Suction FMCOV 3-36-2	LUG	200
13	Butterfly	4	#2 Firepump Suction FMCOV 3-32-1	Wafer	200
14	Butterfly	10	Strainer Isolation Valve A	LUG	-
15	Butterfly	10	Strainer Isolation Valve B	LUG	-
16	Butterfly	10	Strainer Isolation Valve C	LUG	-
17	Butterfly	10	Strainer Isolation Valve D	LUG	-
18	Butterfly	10	Strainer Isolation Valve E	LUG	-
19	Butterfly	10	Strainer Isolation Valve F	LUG	-
20	Butterfly	10	Strainer Isolation Valve G	LUG	-
21	Butterfly	10	Strainer Isolation Valve H	LUG	-
22	Butterfly	10	Raw Water Cross Connect Valve A	Wafer	-
23	Butterfly	10	Raw Water Cross Connect Valve B	Wafer	-

1.1.2 Strainers designated for overhaul or renewal.

SERVICE	SIZE (INCHES)	QTY	MANUFACTURER
Main Diesel Engine	10	4	Miller-Leaman
Ship Service Generator	3	2	Eaton
Propeller Shaft Seal	1.5	2	Kraissl NOTE: RPR parts from Kraissl may no longer be available. Use of a new Eaton strainer may be an option if necessary, consult the COR for approval.

1.1.3 Known discrepancies designated for overhaul or renewal.

Task #	CSMP #	Description of Scope of Known Discrepancies
1	2024001	In the Main Engine Room renew the following approximate amounts of pipe insulation using Coast Guard Drawings 154 WPC 256-301, 154 WPC 524-201, and 154 WPC 635-201 as reference: 1. 14” of 6-3/4” MSW pipe insulation on STBD side of ER overhead of MDE 2. 9” of MSW valve insulation for MSW-V-3-34-15-CV, AFT STBD side of #1 R/G discharge line 3. 8” of 2-1/4" insulation, for elbow, AFT STBD side of #1 R/G discharge line 4. 21” of 1-1/4” pipe insulation from ASW-OR-3-34-2 to outboard edge of ASW-OR-3-34-4, AFT PORT side overhead 5. 20” of 2-1/4” insulation, for elbow to pipe support, AFT PORT side overhead 6. 8” of MSW valve insulation, for MSW-OR-3-33-20 ORF PLT, outboard side of PORT MDE exhaust lagging
2	2025003	Renew the following piping spools with 70-30 CUNI using Coast Guard Drawings 154 WPC 256-301 and 154 WPC 524-201 as reference. Exact location of piping renewals may be designated by the Coast Guard Inspector: 1. PORT ASW pump outlet 3-32-1 2. Approx. 12” of 1” CUNI piping, associated 2” x 1” brazolet, and 2” CUNI piping with flange, located near ASW-OR-3-33-4 coming off the STBD ASW pump inlet 3. Approx. 6” of 2” CUNI piping above ASW-OR-3-29-2, next to PORT side A/C unit
3	2025004	Renew the following ASW check valves using Coast Guard Drawings 154 WPC 256-301 and 154 WPC 524-201 as reference. 1. 10” MSW wafer check valve (V-3-28-4) along PORT side ER FWD of MSW strainers 2. 3” ASW wafer check valve (ASW-V-3-33-1) along STBD ASW pump discharge 3. 3” ASW wafer check valve (ASW-V-3-33-14) along PORT ASW pump discharge

1.2 Government-furnished property.

None.

2. REFERENCES

COAST GUARD DRAWINGS

Coast Guard Drawing 154 WPC 256-301, Rev D, Main and Auxiliary Cooling System Diagram

Coast Guard Drawing 154 WPC 524-201, Rev D, Auxiliary Cooling System Arrangement

Coast Guard Drawing 154 WPC 529-301, Rev -, Bilge System Diagram

Coast Guard Drawing 154 WPC 635-201, Rev D, Thermal and Acoustical Insulation

COAST GUARD PUBLICATIONS

Coast Guard Technical Publication (TP) 8000, SWBS 256, Apr 2015, Main Engine Seawater Strainer, 10 Inch Duplex Basket Strainer

Surface Forces Logistics Center Standard Specification 0000 (SFLC Std Spec 0000), 2022, General Requirements

Surface Forces Logistics Center Standard Specification 6310 (SFLC Std Spec 6310), 2022, Requirements for Preservation of Ship Structures

OTHER REFERENCES

American Society of Mechanical Engineers (ASME) B16.34, 2004, Valves-Flanged, Threaded, and Welding End

ASTM International (ASTM) F992, 2006, Standard Specification for Valve Label Plates

Manufacturers Standardization Society of the Valve and Fittings Industry (MSS) SP-61, 2003 Edition, Pressure Testing Of Steel Valves

Manufacturers Standardization Society of the Valve and Fittings Industry (MSS) SP-67, 2002 Edition, Butterfly Valves

Manufacturers Standardization Society of the Valve and Fittings Industry (MSS) SP-72, 1999 Edition, Ball Valves with Flanged or Butt-Welding Ends for General Service

Manufacturers' Standardization Society of the Valve and Fittings Industry (MSS) SP-80, 2008 Edition, Bronze Gate, Globe, Angle and Check Valves

ASTM International (ASTM) D1330, 2010, Standard Specification for Rubber Sheet Gaskets

Society of Automotive Engineers (SAE) Aerospace Material Specification (AMS) G-6032, 2014 Grease, Plug Valve, Gasoline and Oil Resistant, NATO Code Number G-363, Metric

3. REQUIREMENTS

3.1 General.

3.1.1 CIR. The Contractor must submit a CIR for the inspections listed in the following paragraph(s):

- 3.2.2 Submit inspection report.

3.1.2 Tech Rep.

None.

3.1.3 Protective measures. The Contractor must furnish and install all protective measures in accordance with SFLC Std Spec 0000, paragraph 3.3.3 (Vessel component, space, and equipment protection).

3.1.4 Interferences. The Contractor must handle all interferences in accordance with SFLC Std Spec 0000, paragraph 3.3.5 (Interferences).

3.1.5 Valve material requirements. For the purposes of establishing pricing, assume all above-listed valves (paragraphs 1.1.1 and 1.1.2) have a bronze housing and flanged connections. Verify actual configuration by ship-check prior to purchasing any materials. If actual configuration differs from the drawing and the list above, document any discrepancies and submit them with the report listed in paragraph titled "Submit inspection report" below.

3.1.6 Fluid handling requirements. All residual fluids drained from the piping system must be disposed of in accordance with all Federal, state, and local rules and regulations.

NOTE

3.2 Sub-paragraphs are mandatory tasks and requirements.

3.2 Mandatory/recurring tasks. The Contractor must:

3.2.1 Remove each designated valve and disassemble each designated strainer, inspect. Remove all valves and disassemble all strainers designated in Section 1.1 (Intent), then immediately install gaskets and blank flanges over all openings, securing each flange with at least two bolts, 180 degrees apart. Visually inspect the piping, mounting arrangements, exposed bilge surfaces, and associated components and surfaces for all discrepancies (e.g. damage, failed coating systems, corrosion, etc.). Determine the percentage of remaining material for each waster piece that may be installed, if any. Determine, if any, valve label plates are damaged or missing.

3.2.2 Submit inspection report. Submit a CIR detailing all inspection findings and all discrepancies (e.g. any required modifications to accommodate new valves, corrosion and coatings failures requiring touchup, missing valve label plates, etc.). Include in the report all new recommended repairs not already specified herein.

3.2.3 Overhaul or renew each designated valve and overhaul each designated strainer. For each valve determine the most economical method for restoring the valve to a fully overhauled condition (i.e. either disassemble and overhaul the valve, or renew the valve in its entirety). Overhaul each designated strainer.

3.2.3.1 Optional valve renewal. At no additional cost to the Government, valves designated for overhaul may be renewed when that is more economical. Ensure all new valves are commercial-standard type valves, conforming to the applicable standard listed in Table I (Valve Standards). New valves must be equivalent (e.g. identical material, etc.) to the existing; substitution of body material or trim set is not authorized. MIL-STD valves installed must be substituted with equivalent commercial standard valves.

INTENT

When quoting (pre-award/pre-inspection), if a contractor determines, due to valve size, it will be more economical for them to completely renew a valve versus overhauling it (i.e., valve can be procured and swapped out more cheaply/easily than complete disassembly/reassembly) then quote/plan on renewing that valve. Otherwise quote on overhauling the valve.

Post-award, when overhauling a valve, the contractor will be expected to 1) completely disassemble, clean, reassemble, and reinstall each valve, 2) determine which valve subcomponents are consumables (e.g., seals, gaskets, o-rings, plastic parts, other soft parts, etc.) and which are non-consumables, and then furnish/renew all consumable sub-components at reassembly.

It is appropriate to submit a CFR requesting additional funds to renew or repair non-wearing sub-components (e.g., valve bodies, stems, metal discs, etc.) that are found damaged after disassembly/inspection, and must be renewed or repaired prior to reassembly.

3.2.3.2 Valve overhaul requirements. Disassemble each valve to the extent necessary to perform the required work. Clean all internal surfaces and visually inspect for defects in body and structural material. Inspect the surface finish and condition of seats, disks, parting faces, plugs, and sealing surfaces. When necessary machine, grind, lap and spot-in seat-to-disk to obtain an acceptable leakage rate at or below valve testing standards (see Table I below). Reassemble the valve using new hardware and software (e.g. packing, O-rings, gaskets, seal rings, non-metallic seats, pins, washers, inserts, etc.).

3.2.3.3 Strainer overhaul requirements. Completely disassemble each strainer and clean all surfaces to bright metal. Renew the strainer basket. Renew all associated fasteners, seals, and other soft parts, and reassemble.

3.2.3.3.1 Strainers may be renewed, at no additional cost to the Government, when that is the most economical action. New Contractor-furnished strainers must be equivalent (e.g. identical material, etc.) to the existing; substitution of materials is not authorized. The Government reserves the right to furnish a new sea strainer for installation in place of an existing strainer. If the Government exercises this right, the Contractor must dispose of the old strainer in accordance with all applicable Federal, state, and local regulations.

3.2.3.4 Shop testing requirements.

3.2.3.4.1 Test the overhauled valves in accordance with the applicable standards listed in Table 1 (Valve Standards).

3.2.3.4.2 Hydrostatically test each overhauled duplex strainer's plug valves, both chambers. Lubricate the strainer plug valves with plug valve grease conforming to AMS-G-6032. Remove the strainer cover from the unpressurized side to observe leakage rate, blank or close all other openings. Pressurize the sealed side to 5 psig (9ft head / 2.31 = 3.89 x 135% = 5.26 psig) and hold for 20min. Verify the unpressurized side does not completely fill with water. Repeat for the opposite side.

3.2.3.4.3 Submit a CFR detailing all shop testing results.

TABLE 1 - VALVE STANDARDS

VALVE TYPE	INDUSTRY STANDARD
Steel Valves	MSS SP-61
Butterfly Valve	MSS SP-67
Ball Valves, Flanged or Butt-Welded Ends	MSS SP-72
Bronze Gate, Globe, Angle and Check Valves	MSS SP-80
All others	ASME B16.34

3.2.4 Install overhauled and new valves, overhauled strainers. Remove and dispose of all temporary blanks and gaskets. Install all overhauled and new valves. Renew all disturbed gaskets, seals, and fasteners. Gaskets must conform to ASTM D1330 and fasteners must be nickel-copper.

3.3 Known discrepancy tasks.

3.3.1 Inspection. Inspect all "in-scope" items and areas designated for repair under Section 1.1.3 above. Determine if there are any additional repairs required, other than those specified in the "Repair Description". Submit a CFR detailing any recommended additional repairs that may be required to complete the work specified herein. Pending the inspection perform those additional repairs after the KO releases a change request authorizing those additional growth repairs.

NOTE

Although pipe lengths, routes, and sizes are detailed in the specified drawings, the as-built configuration may vary slightly in routes, lengths, and sizes.

3.3.2 Insulation renewals. Remove the insulation designated for renewal under Section 1.1.3, Task #1 (CSMP 2024001), clean all exposed pipe and pipe component surfaces with a soft bristle brush and a mild detergent solution to remove all visible surface contaminants, then renew all insulation identified under Section 1.1.3, Task #1.

3.3.3 Piping and check valve renewals. Repair the discrepancies described under Section 1.1.3, Task #2 (CSMPs 2025003 and 2025004) in the "Description of Discrepancies and Recommended Repairs" column. Refer to the Coast Guard Drawings listed in Section 2 for configuration description, as applicable.

3.3.4 Hydrostatic test. After all authorized repairs, the Contractor must hydrostatically test all new and disturbed piping and components of the ASW systems in accordance with SFLC Std Spec 0740, Appendix C, Hydrostatic Test. Ensure zero leakage from or permanent deformation of pressure-containing parts by repairing all leaks, deformations, and discrepancies. Submit a CFR.

NOTE

3.4 Sub-paragraphs are describe requirements for performing conditional tasks that may be initiated by change request/modification pending inspections.

3.4 Conditional repair task requirements. If the KO approves a change request that specifies growth repairs to correct discrepancies, the Contractor must conform to all aforementioned requirements, and the following requirements.

3.4.1 Bilge and foundations touch-up coatings application. Mechanically prepare and touch-up preserve bilge areas beneath strainers and valves where coatings have failed, and all new and disturbed surfaces to match existing adjacent areas. Abide by all touch-up requirements outlined in paragraph 3.1.13 (Touch-ups and minor coating repairs)) of SFLC Std Spec 6310.

3.4.2 Valve labeling requirements. New valve label plates must be in accordance with ASTM F992.

3.4.3 Hydrostatic testing. After all authorized growth welding repairs, hydrostatically test new or repaired piping in accordance with SFLC Std Spec 0740, Appendix C, Hydrostatic Test. Zero leakage or

permanent deformation allowed. Repair all discrepancies (e.g. leaks, etc.). Submit a CFR documenting completed hydrostatic testing.

3.4.4 Sea water piping upgrades. Unless circumstances prevent, failed 90-10 CuNi piping and components must renewed using 70-30 CuNi piping and components.

3.5. Perform final tests. After completing all authorized repairs, and in the presence of the COR/PE or Coast Guard inspector, test the operation and tightness of all affected seawater system components using the system fluid at normal operating pressure. Ensure zero visible leakage. Repair all discrepancies. Submit a CFR to document completion of final testing.

3.6 Preservation. Where appropriate to match existing, the Contractor must paint the newly installed insulation in accordance with SFLC Std Spec 6310, using the system specified for "Insulation Surfaces, Fiberglass Sheet/Closed Cell PVC Foam" in Appendix B (Cutter and Boat Interior Paint Systems).

4. NOTES

This section is not applicable to this work item.

WORK ITEM 9: Electrical Power Distribution System, Thermographic Inspection (450 VAC And Below)

1. SCOPE

1.1 Intent. This work item describes the requirements for the Contractor to perform a thermographic inspection on the vessel's Electrical Power Distribution System.

1.2 Government-furnished property.

None

2. REFERENCES

COAST GUARD DRAWINGS

Coast Guard Drawing 154 WPC 320-301, Rev E, 450V System Deck Plan

Coast Guard Drawing 154B WPC 320-301, Rev -, 450V System Deck Plan

Coast Guard Drawing 154 WPC 330-301, Rev G, 120V System Deck Plan

Coast Guard Drawing 154B WPC 330-301, Rev B, 120V System Deck Plan

COAST GUARD PUBLICATIONS

Surface Forces Logistics Center Standard Specification 0000 (SFLC Std Spec 0000), 2022, General Requirements

OTHER REFERENCES

American Society for Nondestructive Testing, SNT-TC-1A: Personnel Qualification and Certification in Nondestructive Testing, 2016

3. REQUIREMENTS

3.1 General.

3.1.1 CIR.

None.

3.1.2 Tech Rep.

None.

3.1.3 Protective measures. The Contractor must furnish and install all protective measures in accordance with SFLC Std Spec 0000, paragraph 3.3.3 (Vessel component, space, and equipment protection).

3.1.4 Interferences. The Contractor must handle all interferences in accordance with SFLC Std Spec 0000, paragraph 3.3.5 (Interferences).

3.2 Operational test – initial. Prior to commencement of any work, the Contractor must witness Coast Guard personnel perform an initial operational test of all items or shipboard devices to be disturbed, used, repaired, or altered, to demonstrate existing operational condition. Submit a CFR.

NOTE

Coast Guard personnel will perform start up and operational test of all shipboard machinery and equipment requiring to be energized and running for thermal imaging inspections.

3.3 Thermal imaging survey and inspections. The Contractor must conduct thermal imaging surveys and inspections on the components listed in TABLE 1 – TEST SITE LOCATIONS as described below. Refer to all documents listed in Section 2 REFERENCES.

3.3.1 Equipment loading for thermal imaging. Load/energize the equipment listed in Table 1, to the greatest practicable extent, for at least 30 minutes, and then perform a thermal imaging survey of the components in the panels to identify all discrepancies. For the Ship Service Switchboard, include output leads of all circuit breakers attached to the switchboard, output leads of both SSDG's into main circuit breakers at switchboard, and all terminal strips inside main switchboard. For all load centers, include all power panels throughout the cutter. All output leads from circuit breakers must be surveyed.

3.3.2 Exceptions to equipment loading. For equipment that cannot be energized/operated practically or safely due to cutter or project-specific constraints (e.g. bilge/fuel pumps cannot be operated because they will run dry during operations/testing, etc.), in lieu of performing a thermographic inspection, de-energized all affected equipment and conduct a thorough visual inspection of the components inside the affected panel(s). Identify all discrepancies and note all findings and recommended repairs in the "Thermal Inspection Report" below.

WARNING

Take all necessary precautions to prevent injury due to electric shock and potential arc-flash. Only necessary personnel (contracted or ship's force) must be present in the compartment while energized panels are open. Only authorized personnel, and no Coast Guard personnel, must break the plane of the arc flash boundary.

3.3.3 Thermal imaging inspections. Prior to opening an electrical enclosure, establish an arc flash boundary of at least four (4) feet from the electrical plane of the equipment. Clearly mark and erect a barrier to prevent the access of unauthorized personnel. Establish visible safety boundary at all entrances to the space where work is being performed using red danger tape or signage. Maintain this safety boundary until all thermal inspections are completed and all electrical covers are reinstalled within the space.

TABLE 1 - TEST SITE LOCATIONS

NOMENCLATURE	SPECIFICATIONS	LOCATION

USCGC ROBERT G. WARD (WPC-154) DRYDOCK AVAILABILITY FY2027

NOMENCLATURE	SPECIFICATIONS	LOCATION
SHIP SERVICE SWITCHBOARD (1S)	450VAC, 3PHASE, 60HZ, 1000A	3-36-0-E
EMERGENCY SWITCHBOARD (1E)	450VAC, 3PHASE, 60HZ, 500A	1-10-0-E
STBD MOTOR CONTROL CENTER GC21	450VAC, 3PHASE, 60HZ, 1200A	3-36-0-E
PORT MOTOR CONTROL CENTER GC22	450VAC, 3PHASE, 60HZ, 1200A	3-36-0-E
PORT ESSENTIAL PANEL	450VAC, 3PHASE, 60HZ, 250A	3-32-2
STBD ESSENTIAL PANEL	450VAC, 3PHASE, 60HZ, 250A	3-32-1
PORT EMERG/VITAL PANEL	450VAC, 3PHASE, 60HZ, 125A	3-33-2
STBD EMERG/VITAL PANEL	450VAC, 3PHASE, 60HZ, 125A	3-33-1
PORT MACHINERY PANEL	450VAC, 3PHASE, 60HZ, 125A	3-27-2
STBD MACHINERY PANEL	450VAC, 3PHASE, 60HZ, 125A	3-27-1
GALLEY PANEL	450VAC, 3PHASE, 60HZ, 250A	1-23-2
GALLEY PANEL	120VAC, 3PHASE, 60HZ, 125A	1-25-2
PORT LOAD CENTER	120VAC, 3PHASE, 60HZ, 400A	3-36-2
STBD LOAD CENTER	120VAC, 3PHASE, 60HZ, 400A	3-36-1
EMER LIGHTING PANEL	120VAC, 3PHASE, 60HZ, 250A	1-10-1
C4ISR POWER PANEL	120VAC, 3PHASE, 60HZ, 250A	2-25-1
PILOTHOUSE PANEL	120VAC, 3PHASE, 60HZ, 125A	01-26-1
PILOTHOUSE EMERG PANEL	120VAC, 3PHASE, 60HZ, 125A	01-26-3
2ND DECK EMERG PANEL	120VAC, 3PHASE, 60HZ, 125A	2-18-1
HVAC PANEL	120VAC, 3PHASE, 60HZ, 125A	1-26-2
MAIN DECK PANEL	120VAC, 3PHASE, 60HZ, 125A	1-15-2
2ND DECK PANEL	120VAC, 3PHASE, 60HZ, 125A	2-22-2
AUTO-BUS TRANSFER SWITCH (ABT24)	450VAC, 3PHASE, 60HZ, 200A	3-27-0-E
AUTO-BUS TRANSFER SWITCH (ABT23)	450VAC, 3PHASE, 60HZ, 200A	3-27-0-E
MANUAL BUS TRANSFER SWITCH (MBT22)	450VAC, 3PHASE, 60HZ, 100A	3-27-0-E
MANUAL BUS TRANSFER SWITCH (MBT21)	450VAC, 3PHASE, 60HZ, 100A	3-27-0-E
AUTO-BUS TRANSFER SWITCH (ABT21)	120VAC, 3PHASE, 60HZ, 260A	2-23-3-Q
AUTO-BUS TRANSFER SWITCH (ABT11)	450VAC, 3PHASE, 60HZ, 150A	1-10-0-E
MOTOR CONTROLLER FWD CAPSTAIN	450VAC, 3PHASE, NEMA SIZE 1	3-36-0-E
MOTOR CONTROLLER, OILY BILGE PUMP	450VAC, 3PHASE, NEMA SIZE 0	3-36-0-E
MOTOR CONTROLLER, POTABLE WATER PUMP #2	450VAC, 3PHASE, NEMA SIZE 0	3-36-0-E
MOTOR CONTROLLER, FUEL OIL OFFLOAD/TRANSFER PUMP	450VAC, 3PHASE, NEMA SIZE 0	3-36-0-E
MOTOR CONTROLLER, PORT CAPSTAIN	450VAC, 3PHASE, NEMA SIZE 1	3-36-0-E
MOTOR CONTROLLER, GREY WATER DISCHARGE PUMP	450VAC, 3PHASE, NEMA SIZE 0	3-36-0-E
MOTOR CONTROLLER, FIRE PUMP (AFT)	450VAC, 3PHASE, NEMA SIZE 3	3-36-0-E
MOTOR CONTROLLER, WASTE OIL PUMP	450VAC, 3PHASE, NEMA SIZE 0	3-36-0-E
MOTOR CONTROLLER, STBD CAPSTAIN	450VAC, 3PHASE, NEMA SIZE 1	3-36-0-E
MOTOR CONTROLLER, POTABLE WATER PUMP #1	450VAC, 3PHASE, NEMA SIZE 0	3-36-0-E
MOTOR CONTROLLER, FWD AUX AIR COMPRESSOR	450VAC, 3PHASE, NEMA SIZE 0	3-36-0-E
MOTOR CONTROLLER, FUEL OIL TRANSFER PUMP	450VAC, 3PHASE, NEMA SIZE 0	3-36-0-E
MOTOR CONTROLLER, PORT FUEL COELESCER	450VAC, 3PHASE, NEMA SIZE 0	3-36-0-E
MOTOR CONTROLLER, STBD FUEL COALESCER	450VAC, 3PHASE, NEMA SIZE 0	3-36-0-E
MOTOR CONTROLLER, PORT MDE FUEL OIL	450VAC, 3PHASE, NEMA SIZE 0	3-27-0-E

NOMENCLATURE	SPECIFICATIONS	LOCATION
BOOST PUMP		
MOTOR CONTROLLER, SEAWATER PUMP #1	450VAC, 3PHASE, NEMA SIZE 0	3-27-0-E
MOTOR CONTROLLER, BILGE PUMP #1	450VAC, 3PHASE, NEMA SIZE 0	3-27-0-E
MOTOR CONTROLLER, PORT STEERING PUMP #2	450VAC, 3PHASE, NEMA SIZE 1	3-36-0-E
MOTOR CONTROLLER, PORT UPPER ENGINE RM EXHAUST FAN	450VAC, 3PHASE, NEMA SIZE 1	3-27-0-E
MOTOR CONTROLLER, PORT LUBE OIL PRIMING PUMP	450VAC, 3PHASE, NEMA SIZE 0	3-27-0-E
MOTOR CONTROLLER, PORT ENGINE RM SUPPLY FAN	450VAC, 3PHASE, NEMA SIZE 0	3-27-0-E
MOTOR CONTROLLER, PORT ENGINE RM EXHAUST FAN	450VAC, 3PHASE, NEMA SIZE 0	3-27-0-E
MOTOR CONTROLLER, GENERATOR RM EXHAUST FAN	450VAC, 3PHASE, NEMA SIZE 0	3-36-0-E
MOTOR CONTROLLER, CUTTER BOAT LAUNCH AND RECOVERY HPU	450VAC, 3PHASE, NEMA SIZE 1	3-40-2-E
MOTOR CONTROLLER, STBD LUBE OIL PRIMING PUMP	450VAC, 3PHASE, NEMA SIZE 0	3-27-0-E
MOTOR CONTROLLER, GENERATOR RM SUPPLY FAN	450VAC, 3PHASE, NEMA SIZE 0	3-36-0-E
MOTOR CONTROLLER, STBD ENGINE RM EXHAUST FAN	450VAC, 3PHASE, NEMA SIZE 0	3-27-0-E
MOTOR CONTROLLER, STBD ENGINE RM SUPPLY FAN	450VAC, 3PHASE, NEMA SIZE 0	3-27-0-E
MOTOR CONTROLLER, FIN STABILIZER	450VAC, 3PHASE, NEMA SIZE 2	3-27-0-E
MOTOR CONTROLLER, SEA WATER PUMP #2	450VAC, 3PHASE, NEMA SIZE 0	3-27-0-E
MOTOR CONTROLLER, STBD STEERING PUMP #1	450VAC, 3PHASE, NEMA SIZE 1	3-36-0-E
MOTOR CONTROLLER, STBD MDE FUEL OIL BOOSTER PUMP	450VAC, 3PHASE, NEMA SIZE 0	3-27-0-E
MOTOR CONTROLLER, STBD UPPER ENGINE RM EXHAUST FAN	450VAC, 3PHASE, NEMA SIZE 1	3-27-0-E
MOTOR CONTROLLER, BOW THRUSTER	450VAC, 3PHASE, NEMA SIZE 4	3-3-0-E
MOTOR CONTROLLER, FIRE PUMP FWD	450VAC, 3PHASE, NEMA SIZE 3	3-3-0-E
MOTOR CONTROLLER, BILGE PUM,P #2	450VAC, 3PHASE, NEMA SIZE 0	3-27-0-E
MOTOR CONTROLLER, EMERGENCY GENERATOR RM EXHAUST FAN	450VAC, 3PHASE, NEMA SIZE 0	1-10-0-E
MOTOR CONTROLLER, PORT STORAGE COMPARTMENT EXHAUST FAN	450VAC, 3PHASE, NEMA SIZE 0	3-40-2-E
MOTOR CONTROLLER, STBD STORAGE COMPARTMENT EXHAUST FAN	450VAC, 3PHASE, NEMA SIZE 0	3-40-1-E
MOTOR CONTROLLER, FORWARD AUXILLIARY COMPARTMENT EXHAUST FAN	450VAC, 3PHASE, NEMA SIZE 0	3-3-0-E

3.4 Specifications for infrared thermal imaging system (IRTIS) equipment. The Contractor must use Infrared Thermal Image System (IRTIS) equipment/camera in performance of this survey that meets or exceeds the following performance criteria:

- Accuracy: +/- 2% or 1.9°C (3.4°F)
- Object temperature range: From at most 40°F to at least +716°F

- Display Type: Color
- Digital Image Type: Color and Grayscale
- Color Palettes: Hot Iron, Rainbow, Grayscale

3.5 Test equipment calibration and operational checks. The Contractor must ensure the IRTIS equipment is calibrated and certified per manufacturer. The IRTIS equipment must be adjusted each time equipment is energized. Initially and when the IRTIS test equipment is operated continuously for long periods of time, a grey scale check must be made in accordance with the IRTIS manufacturer's instructions.

3.6 Thermal imaging camera operator certification. Possession of a current ANSI/ASNT LEVEL I certification (or higher) meeting SNT-TC-1A: Personnel Qualification and Certification in Nondestructive Testing criteria is preferred. Otherwise, describe all relevant thermal imaging skills and experience, as directed elsewhere in the solicitation.

3.7 Scan procedure. The Contractor must perform detailed thermal imaging scan of all wiring, connections, bus work and all current carrying components that are accessible without breaking the electrical plane of the electrical equipment being surveyed while observing the monitor for hot or cold spots. When a potential hot or cold spot is found, the Contractor must determine the temperature difference between the hot or cold spot and surrounding equipment reference temperature.

NOTE

Fahrenheit (F) = Celsius (C)*(9/5) +32, and C = (5/9)*(F-32)

Hot spot. A hot spot is a relative temperature related to the equipment which is surveyed. A general rule of thumb considers a 'hot spot' 18°F / 10°C or more above the equipment reference temperature.

Cold spot: A cold spot is any area of the equipment which is surveyed where the temperature is satisfactory, but exhibits an open connection, component fault, or some other similar problem.

3.7.1 Scan spot criteria. When detecting a hot or cold spot Contractor must determine the temperature difference between the hot and cold spot in accordance with the IR test equipment OEM procedures manual. For a temperature difference of 70 degrees Celsius and above (Severity Code IV), imminent failure is expected, and must be reported immediately to the ship's Engineering Officer and Contracting Officers Representative (COR). The Contractor must follow all criteria and all reporting actions on Table 2 excluding making repairs.

TABLE 2 – REFERENCE TEMPERATURES & SEVERITY CODE DETERMINATION

TEMPERATURE RISE OR ΔT*	OPERATIONAL ASSESSMENT	SEVERITY CODE	ACTION
70°C and above	Failure Imminent	IV	Equipment should be secured immediately and ships Engineering Officer notified. Do not operate until repairs are complete.
40°C to less than 70°C	Failure Almost Certain	III	Equipment should be secured if operating conditions permit otherwise monitored until corrective action can be taken.
20°C to less than 40°C	Failure Possible	II	Corrective action should be taken as soon as feasible.
5°C to less than 20°C	Performance Degraded	I	Corrective action should be taken at next scheduled routine maintenance period or as schedule permits.

Less than 5°C	N/A	N/A	No corrective action required; note for future reference.

***The temperature rises or ΔT's indicated above are the temperature differentials between the thermal anomaly (i.e., faulty connection or component) and the reference temperature. The reference temperature is normally a similar, normal operating connection, component, or phase.**

3.7.2 Scan images. Provide, at a minimum, one color and one gray scale IR thermograph image of each faulty component or connection found, showing isothermal level scale on the images.

3.7.3 Scan photos. Provide, at a minimum, one digital non-infrared color photographic image of each faulty component or connection found from the same angle and perspective as used for the IR thermograph image, and identify the location of fault with arrow on the images.

3.7.4 Scan data. Save in electronic jpeg format, all thermal images and digital photographs, keeping a record of the images that are being saved. Record all pertinent data associated with each image regarding the piece of equipment, location, specific component or connection and the severity code (I, II, III or IV based on Table 2 criteria above).

3.8 Thermal Inspection Report. The Contractor must submit two electronic copies of the thermal image survey report to the COR within five days of the thermographic inspection. Include in the report all discrepancies and recommended repairs for all components inspected (i.e. those that could be inspected with the thermal imaging camera, and those that could only be visually inspected). The report must contain one (1) individual full page per fault/condition found including, at a minimum, the following required content:

- Date and time of inspection
- Location of equipment (id tag on gear) and name of faulty component within the equipment
- IR thermograph and non-IR digital images
- Ambient air temperature of ship space
- Temperature of faulty component
- Reference component temperature
- Temperature rise (Δ T)
- Descriptive technical fault assessment based on temperature rise
- Severity code from Table 2
- Probable cause and recommended action to correction

NOTE

Coast Guard personnel will operate all shipboard machinery and equipment.

3.9 Operational test – post repairs. After completion of work, the Contractor must thoroughly test, in the presence of the Coast Guard Inspector and demonstrate all items or shipboard devices that have been disturbed, used, repaired, altered, or installed to be in satisfactory operating condition. Submit a CFR.

4. NOTES

This section is not applicable to this work item.

WORK ITEM 10: Bilge Surface, Clean, Inspect and Preserve

1. SCOPE

1.1 Intent. This work item describes the requirements for the Contractor to perform various inspections, preventive maintenance, and tests.

1.2 Government-furnished property.

None

2. REFERENCES

COAST GUARD DRAWINGS

Coast Guard Drawing 154 WPC 261-201, Rev B, Fuel Oil Service System Arrangement

Coast Guard Drawing 154 WPC 521-301, Rev C, Firemain System and Magazine Sprinkler Diagram

Coast Guard Drawing 154B WPC 521-301, Rev -, Firemain System and Magazine Sprinkler Diagram

Coast Guard Drawing 154-WPC-528-301, Rev B, Grey Water System Diagram

Coast Guard Drawing 154-WPC 529-301, Rev -, Bilge System Diagram

Coast Guard Drawing 154 WPC 533-201, Rev C, Potable Water System Arrangement

Coast Guard Drawing 154B WPC 533-201, Rev -, Potable Water System Arrangement

Coast Guard Drawing 154 WPC 533-301, Rev H, Potable Water System Diagram

Coast Guard Drawing 154 WPC 541-201, Rev D, Fuel Oil Transfer System Arrangement

Coast Guard Drawing 154B WPC 541-201, Rev B, Fuel Oil Transfer System Arrangement

Coast Guard Drawing 154 WPC 541-301, Rev D, Fuel Oil Service and Transfer System

Coast Guard Drawing 154 WPC 551-301, Rev C, Compressed Air System Diagram

Coast Guard Drawing 154 WPC 593-201, Rev F, Sewage System Arrangement

Coast Guard Drawing 154B WPC 593-201, Rev A, Sewage System Arrangement

Coast Guard Drawing 154 WPC 593-202, Rev C, Oily Bilge System Arrangement

Coast Guard Drawing 154B WPC 593-202, Rev -, Oily Bilge System Arrangement

Coast Guard Drawing 154-WPC 593-301, Rev C, Sewage System Diagram

Coast Guard Drawing 154B WPC 593-301, Rev -, Sewage System Diagram

Coast Guard Drawing 154 WPC 593-302, Rev A, Oily Bilge System Diagram

Coast Guard Drawing 154 WPC 601-302, Rev D, General Arrangement

Coast Guard Drawing 154B WPC 601-302, Rev -, General Arrangement

COAST GUARD PUBLICATIONS

Surface Forces Logistics Center Standard Specification 0000 (SFLC Std Spec 0000), 2022, General Requirements

Surface Forces Logistics Center Standard Specification 6310 (SFLC Std Spec 6310), 2022, Requirements for Preservation of Ship Structures

OTHER REFERENCES

None.

3. REQUIREMENTS

3.1 General.

3.1.1 CIR. The Contractor shall submit a CIR for the inspections listed in the following paragraph(s):

- 3.2 Perform cleaning and inspections.

3.1.2 Tech Rep.

Not applicable.

3.1.3 Protective measures. The Contractor shall furnish and install all protective coverings to seal off and protect all non-affected vessel's components, equipment, and spaces near the work area against contamination during the performance of work. Upon completion of work, the Contractor shall remove all installed protective measures, inspect for the presence of contamination, and return all contaminated equipment, components, and spaces to original condition of cleanliness.

3.1.4 Interferences. The Contractor shall handle all interferences in accordance with SFLC Std Spec 0000, paragraph 3.3.5 (Interferences).

3.2 Perform cleaning and inspections. The Contractor shall perform all maintenance described in Table 1 below. **Submit a CIR** after completing all specified inspections. If a discrepancy is identified while performing the follow-on tasks submit a CFR describing the discrepancy and all recommended repairs. Then submit a final CFR confirming completion of all tasks. Refer to all applicable documents listed in Section 2 above.

TABLE 1

Task	Description of Work Scope
1	**BILGE CLEANING and INSPECTION** GENERATOR ROOM (3-36-0-E) – ***CSMP 2025001*** ENGINE ROOM (3-27-0-E) – ***CSMP 2023001/2025002*** Clean (e.g. pressure wash, hand wash, wipe down, etc.) all bilge surfaces in the compartments designated above free of all foreign materials, such as dirt, oil, sediment or sludge. Remove all persistent residues, taking care not to damage the coating system or to allow any contamination to enter the machinery. Remove fluids, cleaning media, and residues continuously during the washing process. Remove any residual wash media and wipe up residual moisture with clean, lint-free cloths. Collect, contain, and dispose of all fluids, wash media, residues, and cleaning materials in accordance with all Federal, state, and local regulations. Inspect all surfaces for discrepancies and detail all findings and all

	recommended repairs in the CIR described above. Remove the RO equipment in the GENERATOR ROOM from its foundation to gain access to all associated bilge and foundation structure beneath, clean and inspect as described above. Include discrepancies and recommended repairs in the CIR described above. After the KO has released a Change Request, perform the authorized bilge repairs specified therein. ***CSMP 2023001 –*** Partially preserve approx. 40 sqft of engine room bilges along the forward centerline of the engine room and outboard/underneath C1 and C2 to include catch pans/foundation for fuel oil transfer pumps, port side bilge pump and C2 compressor. ***CSMP 2025001 –*** Partially preserve approx.. 30 sqft of generator room bilges at the designation of the COR including foundations underneath the Reverse Osmosis Seawater Strainer, both SSDG strainers, and P-100 strainer. ***CSMP 2025002*** – Preserve the foundations underneath all MSW strainers and both ASW pumps.

4. NOTES

None

WORK ITEM 11: Machinery Ventilation System, Clean and Preserve

1. SCOPE

1.1 Intent. This work item describes the requirements for the Contractor to clean the interior of the following ventilation system components and ducts and preserve the demister screens in the designated locations.

TABLE 1 – MACHINERY VENTILATION DUCTS TO BE CLEANED

DUCT
Main Engine Room Supply
Main Engine Room Exhaust
Generator Room Supply
Generator Room Exhaust
PORT Steering Gear Room Supply
PORT Steering Gear Room Exhaust
STBD Steering Gear Room Supply
STBD Steering Gear Room Exhaust
FWD Auxiliary Machinery Room Supply
FWD Auxiliary Machinery Room Exhaust
EDG Room Supply
Sanitary Exhaust

TABLE 2 – LOCATIONS OF DEMISTER SCREENS TO BE PRESERVED

LOCATION
WTC 1-10-1
WTC 1-10-2
WTC 1-28-1
WTC 1-28-2
WTC 1-30-1
WTC 1-30-2
WTC 1-34-1
WTC 1-34-2
WTC 1-38-1
WTC 1-38-2

2. REFERENCES

COAST GUARD DRAWINGS

Coast Guard Drawing 154 WPC 513-201, Rev B, Machinery Ventilation Arrangement

Coast Guard Drawing 154B WPC 513-201, Rev B, Machinery Ventilation Arrangement

Coast Guard Drawing 154 WPC 513-301, Rev C, Machinery Ventilation Diagram

Coast Guard Drawing 154B WPC 513-301, Rev -, Machinery Ventilation Diagram

COAST GUARD PUBLICATIONS

Surface Forces Logistics Center Standard Specification 0000 (SFLC Std Spec 0000), 2022, General Requirements

Surface Forces Logistics Center Standard Specification 5100 (SFLC Std Spec 5100), 2022, Clean Shipboard Ventilation Systems

Surface Forces Logistics Center Standard Specification 6310 (SFLC Std Spec 6310), 2022, Requirements for Preservation of Ship Structures

Coast Guard Technical Publication (TP) 8123, SEP 2019, Preliminary - Heating, Ventilation, and Air Conditioning System - Frc-514-P1

OTHER REFERENCES

None

3. REQUIREMENTS

3.1 General.

3.1.1 CIR.

None.

3.1.2 Tech Rep.

None.

NOTE

The Contractor is reminded to comply with ALL requirements invoked by this work item, such as SFLC Std Spec 0000 and SFLC Std Spec 5100 (e.g. mark and restore damper positions; remove all intake and exhaust screens, clean vent systems in their entirety from the point where the air enters the system to the point where the air is discharged from the system; restore, renew, or repair all articles or component removed or disturbed to their original condition if damaged or modified during contract work, etc).

3.1.3 Protective measures. The Contractor must furnish and install all protective measures in accordance with SFLC Std Spec 0000, paragraph 3.3.3 (Vessel component, space, and equipment protection).

3.1.4 Interferences. The Contractor must handle all interferences in accordance with SFLC Std Spec 0000, paragraph 3.3.5 (Interferences).

3.2 Operational test, initial. Prior to commencement of work, the Contractor must witness Coast Guard Personnel perform an initial operational test of the ventilation systems included in this work item, to demonstrate the existing operational condition. Document all modifications to the system (e.g. new holes

in existing duct, etc.) that will be required to perform the cleaning work, do not perform modifications without Coast Guard authorization. Submit a CFR.

NOTE

Please be aware that this work item does not describe cleaning work for MDE and SSDG combustion air intake ducting (the large vertical trunks on main deck and the 01 deck whose inlets face aft). DO NOT perform any work on those ducts via this work item.

This work item only requires work to be performed on vent ducting that is connected directly to machinery space "compartments".

3.3 Cleaning requirements. The Contractor must clean and inspect the interior surfaces of ventilation system ducting runs and components listed in the Table 1 - MACHINERY VENTILATION DUCTS TO BE CLEANED, above. Use Coast Guard drawings and (TP) 8123 listed in Section 2 as reference. Comply with all requirements in SFLC Std Spec 5100. Submit a CFR.

3.3.1 Duct Interior Images for Final Report. After gaining access to duct interiors, take a digital photo of each duct interior surfaces at the opening created to show the condition of the duct work prior to cleaning. Then prior to closing the duct work accesses take a final image of the same area post-cleaning. Add these images to the final report submitted in paragraph 3.4 titled "Operational test, post repairs".

3.3.2 Notification. The Contractor must give written notification to the COR, 48 hours before starting ventilation cleaning work.

NOTE

Coast Guard personnel will operate all shipboard machinery and equipment.

3.4 Demister screens preservation (CSMP2025006). The Contractor must clean, inspect, and preserve the demister screens in the designated locations listed in Table 2 – LOCATIONS OF DEMISTER SCREENS TO BE PRESERVED, above. Use Coast Guard Drawings listed in Section 2 for reference. Comply with all requirements in SFLC Std Spec 5100. Submit a CFR.

3.5 Operational test, post repairs. After completion of work, the Contractor must thoroughly test, in the presence of the Coast Guard Inspector and demonstrate the ventilation systems included in this work item to be in satisfactory operating condition. Submit a CFR.

3.6 Touch-up preservation. The Contractor must prepare and coat all new and disturbed exterior and interior surfaces to match existing adjacent surfaces, in accordance with SFLC Std Spec 6310, Appendix A (Cutter and Boat Exterior Painting Systems) and Appendix B (Cutter and Boat Interior Painting Systems), respectively, and as applicable. Abide by all touch-up requirements outlined in SFLC Std Spec 0000, Appendix A (Requirements for Preservation of Ship Structures).

4. NOTES

This section is not applicable to this work item.

WORK ITEM 12: HVAC Duct System, Clean

1. SCOPE

1.1 Intent. This work item describes the requirements for the Contractor to clean the interior of the following ventilation system components and ducts.

TABLE 1 – AREAS WITH HVAC DUCT OR COMPONENTS TO BE CLEANED

COMPARTMENT	ITEMS TO BE CLEANED.
Pilot House (01-19-0-C)	All supply and return ducting and associated grating/louvers, etc.
MAIN DECK	
HVAC Equipment Room (1-24-1-Q)	All supply and return ducting and associated grating/louvers, etc. All surfaces inside of air handler assembly that contact air going out to supply ducts (e.g. coils, filters, plenums, etc.)
Passage (1-23-0-L)	All supply and return ducting and associated grating/louvers, etc.
Mess Deck (1-17-0-Q)	All supply and return ducting and associated grating/louvers, etc.
Galley (1-18-2-Q)	All supply and return ducting and associated grating/louvers, etc.
Office (1-16-1-A)	All supply and return ducting and associated grating/louvers, etc.
CO Cabin (1-12-1-L)	All supply and return ducting and associated grating/louvers, etc.
XO Stateroom (1-12-2-L)	All supply and return ducting and associated grating/louvers, etc.
OPS CPO Stateroom (1-15-2-L)	All supply and return ducting and associated grating/louvers, etc.
SECOND DECK	
Climate Controlled Store Room (2-23-4-A)	All supply and return ducting and associated grating/louvers, etc.
C4ISR Equipment RM (2-23-3-Q)	All supply and return ducting and associated grating/louvers, etc.
ENG CPO Stateroom (2-32-2-L)	All supply and return ducting and associated grating/louvers, etc.
2 Person Stateroom (2-21-2-L)	All supply and return ducting and associated grating/louvers, etc.
4 Person Stateroom (2-20-1-L)	All supply and return ducting and associated grating/louvers, etc.
4 Person Stateroom (2-17-2-L)	All supply and return ducting and associated grating/louvers, etc.
2 Person Stateroom (2-17-1-L)	All supply and return ducting and associated grating/louvers, etc.
2 Person Stateroom (2-15-2-L)	All supply and return ducting and associated grating/louvers, etc.
2 Person Stateroom (2-15-1-L)	All supply and return ducting and associated grating/louvers, etc.
1 Person Stateroom (2-10-2-L)	All supply and return ducting and associated grating/louvers, etc.
1 Person Stateroom (2-10-1-L)	All supply and return ducting and associated grating/louvers, etc.
Passage (2-10-0-L)	All supply and return ducting and associated grating/louvers, etc.

TABLE 2 – CONTRACTOR FURNISHED TEMP HVAC (PARA 3.3)

YES

2. REFERENCES

COAST GUARD DRAWINGS

Coast Guard Drawing 154 WPC 512-201, Rev -, HVAC Arrangement

Coast Guard Drawing 154 WPC 512-301, Rev B, HVAC System Diagram

Coast Guard Drawing 154 WPC 512-305, Rev -, HVAC Equipment List

Coast Guard Drawing 154B WPC 512-201, Rev A, HVAC Arrangement

Coast Guard Drawing 154B WPC 512-301, Rev -, HVAC System Diagram

Coast Guard Drawing 154B WPC 512-305, Rev -, HVAC Equipment List

COAST GUARD PUBLICATIONS

Surface Forces Logistics Center Standard Specification 0000 (SFLC Std Spec 0000), 2022, General Requirements

Surface Forces Logistics Center Standard Specification 5100 (SFLC Std Spec 5100), 2022, Clean Shipboard Ventilation Systems

Coast Guard Technical Publication (TP) 8123, SEP 2019, Preliminary - Heating, Ventilation, and Air Conditioning System - Frc-514-P1

OTHER REFERENCES

None

3. REQUIREMENTS

3.1 General.

3.1.1 CIR.

None.

3.1.2 Tech Rep.

None.

NOTE

The Contractor is reminded to comply with ALL requirements invoked by this work item, such as SFLC Std Spec 0000 and SFLC Std Spec 5100 (e.g. mark and restore damper positions; remove all intake and exhaust screens, clean vent systems in their entirety from the point where the air enters the system to the point where the air is discharged from the system; restore, renew, or repair all articles or component removed or disturbed to their original condition if damaged or modified during contract work etc).

3.1.3 Protective measures. The Contractor must furnish and install all protective measures in accordance with SFLC Std Spec 0000, paragraph 3.3.3 (Vessel component, space, and equipment protection).

3.1.4 Interferences. The Contractor must handle all interferences in accordance with SFLC Std Spec 0000, paragraph 3.3.5 (Interferences).

3.2 Operational test, initial. Prior to commencement of work, the Contractor must witness Coast Guard Personnel perform an initial operational test of the ventilation systems included in this work item, to demonstrate the existing operational condition. Document all modifications to the system (e.g. new holes in existing duct, etc.) that will be required to perform the cleaning work, do not perform modifications without Coast Guard authorization. Submit a CFR.

3.3 Temporary HVAC. If "YES" is denoted in TABLE 2 – CONTRACTOR FURNISHED TEMP HVAC, the Contractor must provide temporary ventilation to all impacted areas equivalent to the normal zonal ventilation rating for those spaces (i.e. maintain existing climate control) for the duration of work as described in SFLC Std Spec 0000, otherwise the Coast Guard will furnish any required temporary ventilation.

3.4 Cleaning requirements. The Contractor must clean and inspect the interior surfaces of ventilation system ducting runs and components listed in the TABLE 1 – AREA WITH HVAC DUCT OR COMPONENTS TO BE CLEANED above. Use Coast Guard drawings and (TP) 8123 listed in Section 2 as reference. Comply with all requirements in SFLC Std Spec 5100. Submit a CFR.

3.4.1 Duct Interior Images for Final Report. After gaining access to duct interiors, take a digital photo of each duct interior surfaces at the opening created to show the condition of the duct work prior to cleaning. Then prior to closing the duct work accesses take a final image of the same area post-cleaning. Add these images to the final report submitted in paragraph 3.6 Operational test, post repairs, below.

3.5 Notification. The Contractor must give written notification to the COR, 48 hours before starting ventilation cleaning work.

NOTE

Coast Guard personnel will operate all shipboard machinery and equipment.

3.6 Operational test, post repairs. After completion of work, the Contractor must thoroughly test, in the presence of the Coast Guard Inspector and demonstrate the ventilation systems included in this work item to be in satisfactory operating condition. Submit a CFR.

4. NOTES

This section is not applicable to this work item.

WORK ITEM 13: Condensers, C1 and C2, Renew

1. SCOPE

1.1 Intent. This work item describes the requirements for the Contractor to renew both AC Condensers.

1.2 Government-furnished property.

MTI	ITEM DESCRIPTION	NSN/PN	QTY	ESTIMATED COST ($/UNIT)
N	STBD C1 Condenser	NSN: 152078873	1 ea.	18,378.25
N	PORT C2 Condenser	NSN: 152078874	1 ea.	13,107.29

2. REFERENCES

COAST GUARD DRAWINGS

Coast Guard Drawing 154 WPC 256-201, Rev C, Main Propulsion Cooling System Arrangement

Coast Guard Drawing 154 WPC 256-301, Rev D, Main and Auxiliary Cooling System Diagram

Coast Guard Drawing 154 WPC 512-201, Rev -, HVAC Arrangement

Coast Guard Drawing 154 WPC 512-301, Rev B, HVAC System Diagram

Coast Guard Drawing 154 WPC 512-305, Rev -, HVAC Equipment List

Coast Guard Drawing 154B WPC 256-201, Rev -, Main Propulsion Cooling System Arrangement

Coast Guard Drawing 154B WPC 256-301, Rev -, Main and Auxiliary Cooling System Diagram

Coast Guard Drawing 154B WPC 512-201, Rev A, HVAC Arrangement

Coast Guard Drawing 154B WPC 512-301, Rev -, HVAC System Diagram

Coast Guard Drawing 154B WPC 512-305, Rev -, HVAC Equipment List

Coast Guard Drawing 154B WPC 516-201, Rev -, HVAC Refrigerant Piping A&D

Coast Guard Drawing 154B WPC 516-301, Rev -, HVAC Refrigerant Piping Diagram

COAST GUARD PUBLICATIONS

Surface Forces Logistics Center Standard Specification 0000 (SFLC Std Spec 0000), 2022, General Requirements

Surface Forces Logistics Center Standard Specification 0740 (SFLC Std Spec 0740), 2022, Welding and Allied Processes

Surface Forces Logistics Center Standard Specification 6310 (SFLC Std Spec 6310), 2022, Requirements for Preservation of Ship Structures

Coast Guard Technical Publication (TP) 8123, SEP 2019, Preliminary - Heating, Ventilation, and Air Conditioning System - Frc-514-P1

OTHER REFERENCES

None

3. REQUIREMENTS

3.1 General.

3.1.1 CIR.

None.

3.1.2 Tech Rep.

Not applicable.

3.1.3 Protective measures. The Contractor must furnish and install all protective measures in accordance with SFLC Std Spec 0000, paragraph 3.3.3 (Vessel component, space, and equipment protection).

3.1.4 Interferences. The Contractor must handle all interferences in accordance with SFLC Std Spec 0000, paragraph 3.3.5 (Interferences).

NOTE

Coast Guard personnel will operate all shipboard machinery and equipment.

3.2 Operational test, initial. Prior to commencement of work, the Contractor must witness Coast Guard Personnel perform an initial operational test of the ventilation systems included in this work item, to demonstrate the existing operational condition. Submit a CFR if any discrepancies are noted.

3.3 Condenser renewal. The Contractor must install protective measures and remove and dispose of old condensers. Upon install of new condensers renew all mounting brackets, affected/adjacent piping, and local operating controls. Once system is installed notify the COR and operationally test both systems in presence of COR. Remove and properly dispose of all protective measures and waste. See Para 4.1 for further description/images.

NOTE

Coast Guard personnel will operate all shipboard machinery and equipment.

3.4 Operational test, post repairs. After completion of work, the Contractor must thoroughly test, in the presence of the Coast Guard Inspector, and demonstrate the ventilation systems included in this work item to be in satisfactory operating condition. Submit a CFR.

4. NOTES

4.1

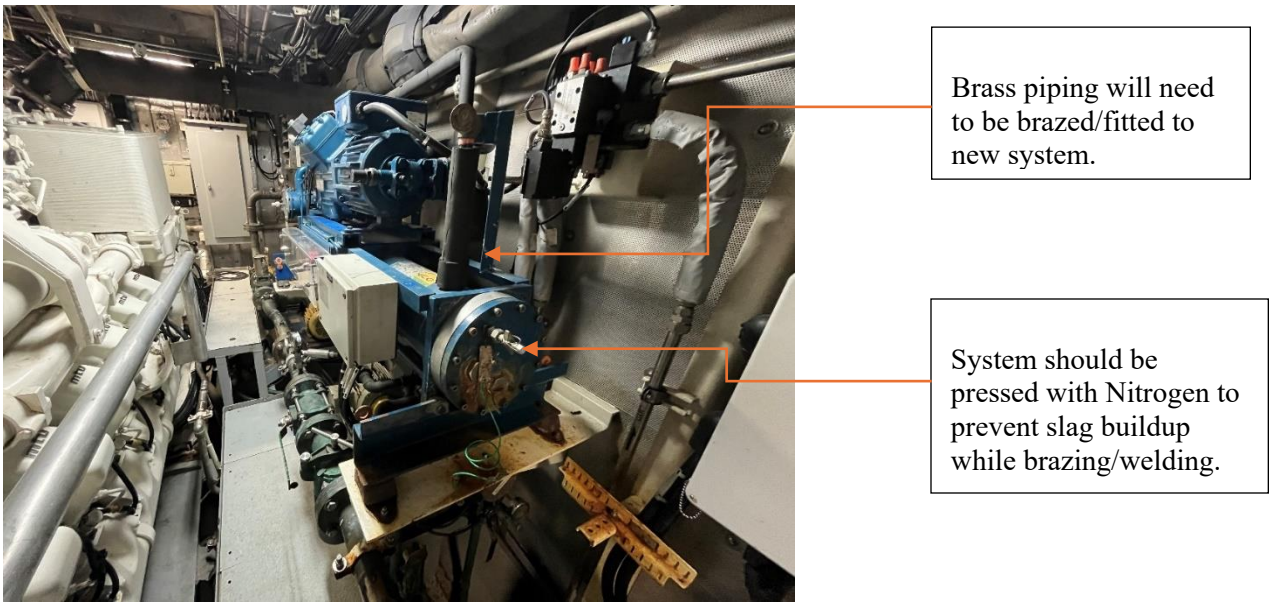

FIGURE 1 – STBD AC CONDENSER C1 (LOOKING FWD)

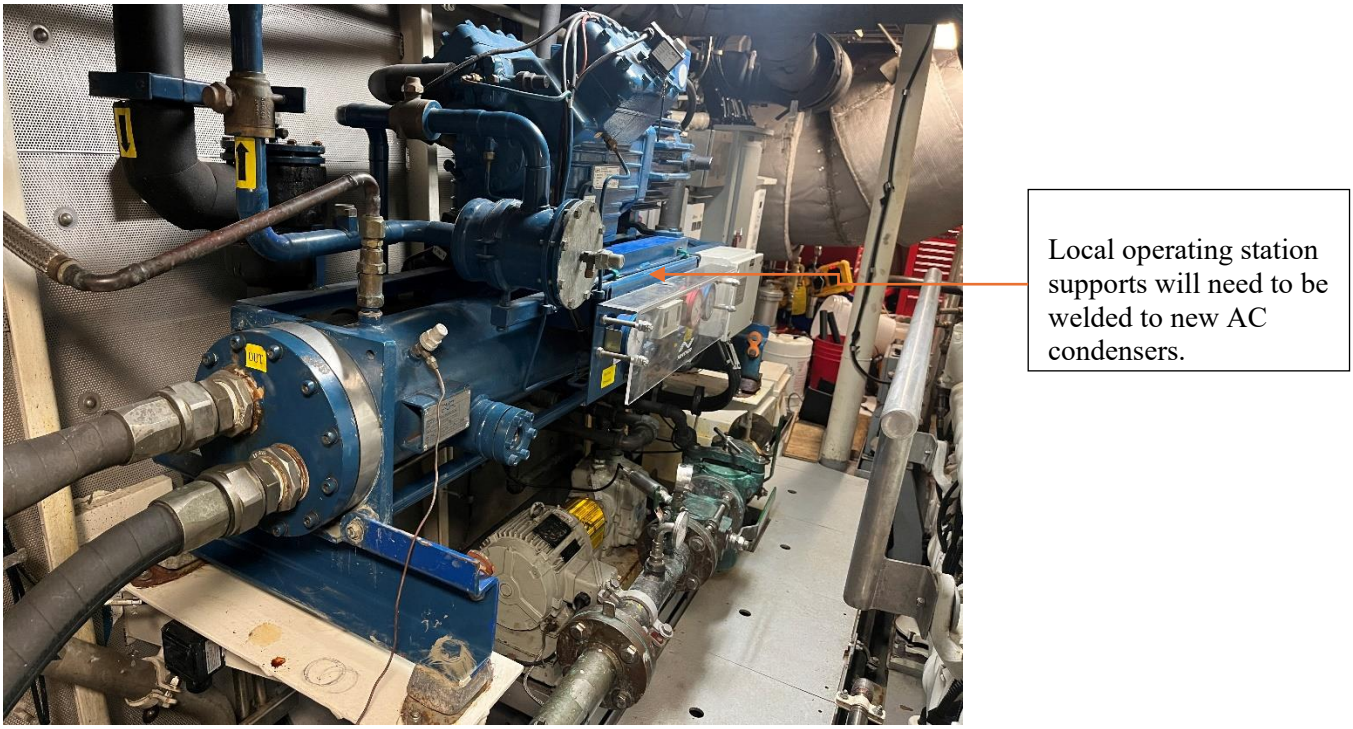

FIGURE 2 – STBD AC CONDENSER C1 (LOOKING AFT)

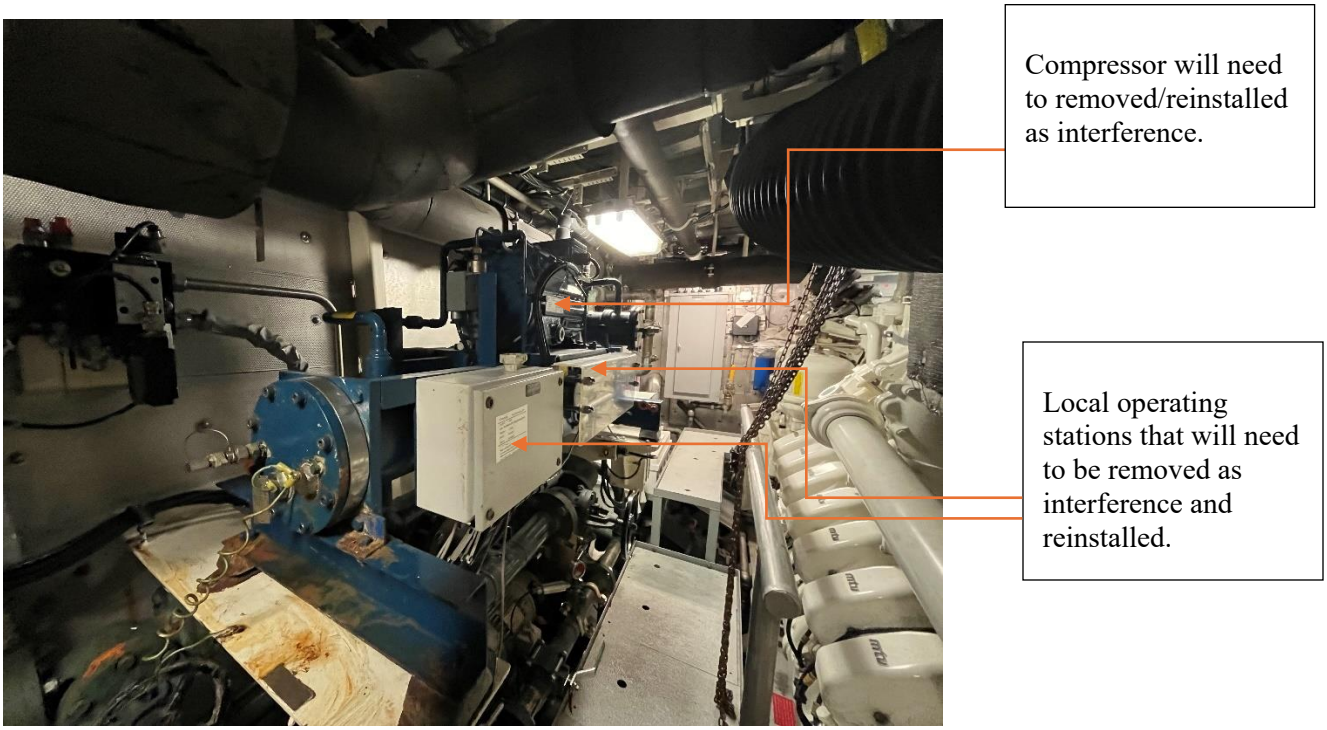

FIGURE 3 – PORT AC CONDENSER C2 LOOKING FWD

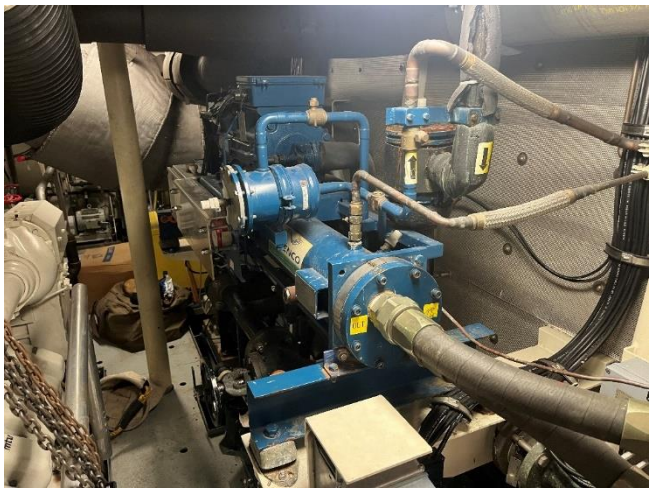

FIGURE 4 – PORT AC CONDENSER C2 LOOKING AFT

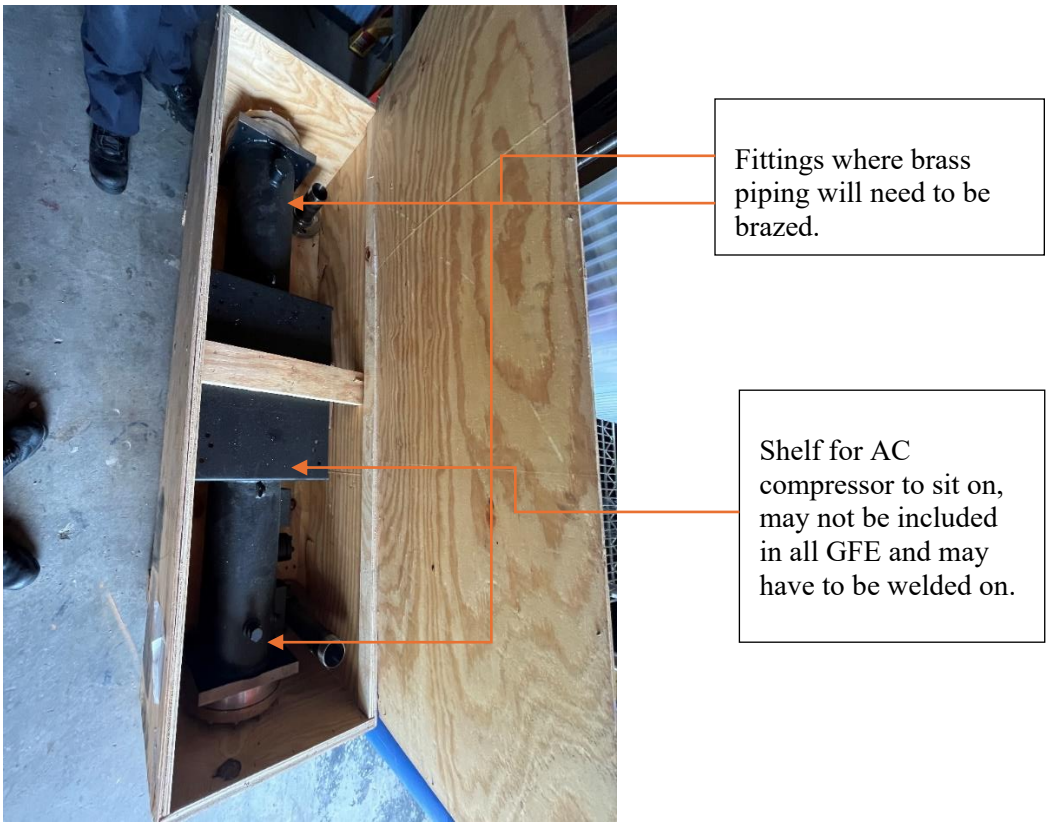

FIGURE 5 – AC CONDENSER PROVIDED AS GFE EXAMPLE

WORK ITEM 14: Rudder Assemblies, Inspect and Repair

1. SCOPE

1.1 Intent. This work item describes the requirements for the Contractor to remove, inspect, and reinstall the port and starboard rudder assemblies.

1.2 Government-furnished property.

MTI	ITEM DESCRIPTION	NSN/PN	QTY	ESTIMATED COST ($/UNIT)
Y	**Port Rudder	NSN: 2040-01-690-5509	1 ea.	30,000
Y	**Stbd Rudder	NSN: 2040-01-690-5507	1 ea.	30,000
N	Shaft Seal Overhaul Kit (Service Kit A from TP-8153, pg 7-5, Table 7-2)	NSN: 5330-01-595-4647 PN: H785252-01-6	2 kt	9722.00
N	Shaft Seal Overhaul Kit (Service Kit B from TP-8153, pg 7-5, Table 7-3)	NSN: 5330- 01-596-7760 PN: H78525-01-7	2 kt	6,170.00
N	Locknut PC5 154WPC 562-002	NSN: 5310-33-201-6431 PN: KM32	4 ea.	100.00
N	Lock Washer PC6 154WPC 562-002	NSN: 5310-33-201-5247 PN: MB 32	2 ea.	150.00
N	Upper Roller Bearing PC7 154WPC 562-002	NSN: 3110-01-597-3537 PN: 23032 CC/C2W33	2 ea.	502.11
N	Oil Seal PC8 154WPC 562-002	NSN: 5330-01-618-5091 PN: CR70028 CRWH1R	2 ea.	60.00
N	Lower Bearing PC9 154WPC 562-002	NSN: 3120-01-631-4104	2 ea.	1,162.00

***Government-loaned property, which must be returned to the vessel upon completion of the availability.**
****New or refurbished equipment that the Government may provide for installation in place of existing equipment.**
*****Government-furnished property, which is to be supplied by either the vessel or the C4IT Service Center.**

2. REFERENCES

COAST GUARD DRAWINGS

Coast Guard Drawing 154 WPC 204-301, Rev F, Equipment Removal Plan
Coast Guard Drawing 154B WPC 204-301, Rev -, Equipment Removal Plan
Coast Guard Drawing 154 WPC 561-202, Rev C, Steering Arrangement & Details
Coast Guard Drawing 154 WPC 562-201, Rev A, Rudder Details
Coast Guard Drawing 154 WPC 562-202, Rev C, Rudder Arrangement & Details
Coast Guard Drawing 154B WPC 562-201, Rev -, Rudder Details

Coast Guard Drawing 154B WPC 562-202, Rev -, Rudder Arrangement & Details

COAST GUARD PUBLICATIONS

Coast Guard Technical Publication (TP) 8153A, SWBS 562, Apr 2019, Rudderstock Seal Assembly, Type EL + IS, Model H 78525-01

Coast Guard Technical Publication (TP) 8916, SWBS 086, 28 JUL 2020, TECHNICAL REPAIR STANDARD FOR USE ON FRC - FLOW ADAPTIVE RUDDER AND EL + IS RUDDERSTOCK SEAL MODEL - H 78525-01 (HULLS 1118, 1139 AND ON) 154' WPC (A) AND (B) CLASS CUTTERS

Surface Forces Logistics Center Standard Specification 0000 (SFLC Std Spec 0000), 2022, General Requirements

Surface Forces Logistics Center Standard Specification 6310 (SFLC Std Spec 6310), 2022, Requirements for Preservation of Ship Structures

Surface Forces Logistics Center Standard Specification 0740 (SFLC Std Spec 0740), 2022, Welding and Allied Processes

OTHER REFERENCES

ASTM International (ASTM) D5363, 2008; Standard Specification for Anaerobic Single-Component Adhesives (An)

MIL-PRF-16173, Sep 2006, Corrosion Prevention Compound, Solvent Cut-Back, Cold-Application

MIL-S-45180, 1998; Sealing Compound, Gasket, Hydrocarbon Fluid and Water Resistant

MIL-C-16173, Jan 1993, Corrosive Preventative Compound, Solvent Cutback, Cold Application

3. REQUIREMENTS

3.1 General.

3.1.1 CIR. The Contractor must submit a CIR for the inspections listed in the following paragraph(s):

- 3.2.3 Submit inspection and test report.

3.1.2 Tech Rep. Qualifications for performing rudder seal maintenance and repairs. If requested by the KO, submit evidence that one or more on-site technicians has successfully overhauled, renewed, or repaired the rudder face seal, or a similar model of face seal manufactured by the same company, and further describe all knowledge, experience, and training contributing to being qualified to disassemble/reassemble the rudder face seal.

3.1.3 Protective measures. The Contractor must furnish and install all protective measures in accordance with SFLC Std Spec 0000, paragraph 3.3.3 (Vessel component, space, and equipment protection).

3.1.3.1 Protective measures- rudder specific. Provide suitable covering to protect all exposed rudder and vessel components against contamination during the performance of the work specified herein. Ensure that rudder stock/shaft surfaces are supported in a minimum of two locations, at all times, until reinstallation.

3.1.4 Interferences. The Contractor must handle all interferences in accordance with SFLC Std Spec 0000, paragraph 3.3.5 (Interferences).

NOTE

Coast Guard personnel will operate all shipboard machinery and equipment.

3.2 Mandatory/recurring tasks. The Contractor must:

3.2.1 Perform an initial inspection and witness an operational test. Prior to commencement of work, witness Coast Guard personnel perform an operational test of the steering gear and rudder systems to demonstrate existing operational condition. Ensure the carrier housing is not deflecting while taking readings. Measure and record full port and full starboard rotation angles of both rudders, note all discrepancies. Verify that port and stbd rudder movement is synchronized, that both rudders move in tandem, and both hold the same respective rudder angles while rotating. Prior to disassembly and while the rudder indicator is at zero degrees, mark the tiller arm, steering arm, autopilot potentiometer base and wheel with alignment marks for reinstallation. Measure and record vertical and horizontal movement of the rudder.

NOTE

5 feet of clearance between the bottom of the rudder and the drydock floor is required for rudder removal. Rudder interior surfaces may have been coated with a corrosion inhibitor, handle all fluids in accordance with all Federal, state and local regulations. Take care not to damage the installed lower bearings during the removal of the rudder stocks.

3.2.2 Remove, clean, inspect, and test both rudders. Referring to the documents listed in Section 2 as necessary, remove both rudders. Clean and visually inspect all exposed components and surfaces (e.g. rudder stock/shaft and blade surfaces, bearings, bearing housing, seals, and grease passages) for discrepancies (e.g. excessive wear or corrosion, cracked welds, deformation, etc.). Remove all blade drain plugs; chase all female threads. Verify rudder stocks are not bent; make note of any evidence that a rudder blade was struck or otherwise hit bottom. Verify there are no cracked weld joints on rudder blades, bearing housings, and all other associated weldments. Inspect all associated machined surfaces (e.g. rudder stock journals/sleeves, keyways, lower bearing surfaces, etc.) for unusual or excessive wear; measure and record dimensions of those worn areas to the nearest 0.001”.

3.2.2.1 Pressurize rudder voids to 2 psig and hold for 10 minutes in accordance with SFLC Std Spec 0740, Appendix C, verify no leaks.

3.2.2.2 Perform a dye penetrant test in accordance with SFLC Std Spec 0740, Appendix C on all rudder stock/nut threads, keys, and keyways; note all discrepancies.

3.2.3 Submit inspection and test report. Submit a CIR to document all noted discrepancies and measurement data taken above; include a description of recommended repairs if appropriate.

3.2.4 Renew components. Referring to the documents listed in Section 2 as necessary, renew the expendable pieces of each rudder shaft seal (sea water seal) using Government-furnished seal service kits. Ensure the non-expendable seal pieces are thoroughly cleaned and inspected prior to renewing the expendable pieces. Renew both upper roller bearings and lower bearings using government furnished property. Renew drain plugs (with the appropriate non-carbon steel material e.g. NiCuAl or stainless

steel or Monel). Coat new plugs prior to installation with a sealing and locking compound conforming to ASTM D5363-AN0123 or a flexible joint compound conforming to MIL-S-45180, Type II.

3.2.5 Reinstall rudder assemblies. Upon completion of all inspections and authorized maintenance and repairs, reassemble and reinstall the port and starboard rudder assemblies. Ensure each rudder is installed using original match-marks and is aligned to within plus or minus 1/2 degree of the pilothouse rudder angle indicator.

NOTE

3.3 Sub-paragraphs are describe requirements for performing conditional tasks that may be initiated by change request/modification pending inspections.

3.3 Conditional repair task requirements. If the KO approves a change request that specifies growth repairs to correct discrepancies, the Contractor must conform to all aforementioned requirements, and the following requirements.

3.3.1 Rudder blade and stock assembly renewal. The Government reserves the right to furnish a new rudder assembly for installation in place of the existing rudder assembly. If the Government exercises this right, the Contractor must turn over the designated components to the Coast Guard PA as an MTI items.

NOTE

Coast Guard personnel will operate all shipboard machinery and equipment.

3.4 Final grooming and operational tests. After completion of reassembly work, prior to coming out of drydock, and in the presence of the COR/PE or Coast Guard Inspector, the Contractor must thoroughly test and demonstrate the steering gear system (all modes of control) and rudders to prove all repairs to ensure the rudders travel smoothly throughout the full range of travel without chattering or binding and at the required rate of train. Steering gear must be operated in all modes of control from all locations. Compare post-repair results with the pre-repair results to detect discrepancies. Ensure the rudders are aligned to mid ships before going back in the water. Correct all discrepancies. Submit a CFR to document fully satisfactory operation.

3.4.1 Sea trail tests. Test the steering and rudder system, after the vessel is waterborne, to ensure the rudders travel smoothly throughout the full range of travel without chattering or binding and at the required rate of train. The steering must be operated in all modes of control from all locations. Compare waterborne results with the drydocked results to detect any abnormalities. While underway on sea trails, in the presence of a Coast Guard Inspector, monitor steering gear and rudder operation. Correct all discrepancies. Submit a CFR to document fully satisfactory operation.

4. NOTES

This section is not applicable to this work item.

WORK ITEM 15: Stabilizing Fins, Inspect and Repair

1. SCOPE

1.1 Intent. This work item describes the requirements for the Contractor to perform repairs to the fin stabilizer system.

1.2 Government-furnished property.

MTI	ITEM DESCRIPTION	NSN/PN	QTY	ESTIMATED COST ($/UNIT)
Y	**Fin Blade	NSN: 2040-01-598-8181 PN: 601-15-020S02-00-00-A	2 ea.	22,254.38
N	**Hydraulic Cylinder	NSN: 9999-01-682-3497 PN: 304-07-070040-00-01-ABS_C	4 ea.	5,723.55
Y	**Shaft, Shouldered	NSN: 3040-01-659-0358 PN: 601-15-S00001-00-05_F	2 ea.	12,076.58

***Government-loaned property, which must be returned to the vessel upon completion of the availability.**
****New or refurbished equipment that the Government may provide for installation in place of existing equipment.**
*****Government-furnished property, which is to be supplied by either the vessel or the C4IT Service Center.**

2. REFERENCES

COAST GUARD DRAWINGS

Coast Guard Drawing 154 WPC 556-202, Rev D, Fin Stabilizer Hydraulic System A&D

Coast Guard Drawing 154B WPC 556-202, Rev -, Fin Stabilizer Hydraulic System A&D

Coast Guard Drawing 154 WPC 556-302, Rev C, Fin Stabilizer Hydraulic System Diagram

Coast Guard Drawing 154 WPC 565-201, Rev -, Fin Stabilizer System A&D

Coast Guard Drawing 154 WPC 565-301, Rev A, Fin Stabilizer Control System

Coast Guard Drawing 154B WPC 565-301, Rev -, Fin Stabilizer Control System

Coast Guard Drawing 154 WPC 565-302, Rev C, Fin Stabilizer Control System COED

Coast Guard Drawing 154B WPC 565-302, Rev -, Fin Stabilizer Control System COED

COAST GUARD PUBLICATIONS

Surface Forces Logistics Center Standard Specification 0000 (SFLC Std Spec 0000), 2022, General Requirements

Surface Forces Logistics Center Standard Specification 6310 (SFLC Std Spec 6310), 2022, Requirements for Preservation of Ship Structures

Coast Guard Technical Publication (TP) 8010B, SWBS 565, May 2019, Fin Stabilizer System – Model QC-1500 with MPU20 Hydraulic System

Coast Guard Technical Publication (TP) 8911B, SWBS 086, Apr 2020, Technical Repair Standard for Use on FRC - Fin Stabilizer System Model QC-1500

OTHER REFERENCES

None

3. REQUIREMENTS

3.1 General.

3.1.1 CIR. The Contractor must submit a CIR for the inspections listed in the following paragraph(s):

- 3.2.2.2 Submit inspection and test report.

3.1.2 Tech Rep.

None.

3.1.3 Protective measures. The Contractor must furnish and install all protective measures in accordance with SFLC Std Spec 0000, paragraph 3.3.3 (Vessel component, space, and equipment protection).

3.1.3.1 Qualifications for performing work on Quantum Model QC-1500 fin stabilizer system. If requested by the KO, submit evidence that one or more on-site technicians has successfully performed disassembly/reassembly of the Quantum Model QC-1500 fin stabilizer hull unit, or a similar unit from the same manufacturer, on at least one prior project/contract.

NOTE

3.2 Sub-paragraphs are mandatory tasks and requirements.

3.1.4 Interferences. The Contractor must handle all interferences in accordance with SFLC Std Spec 0000, paragraph 3.3.5 (Interferences).

3.2 Mandatory/recurring tasks. The Contractor must:

3.2.1 Perform an initial inspection and witness an operational test. Prior to commencement of work, witness Coast Guard personnel perform an operational test of the fin stabilizer system to demonstrate existing operational condition. Observe all affected equipment while the system is operating to determine all discrepancies. Measure and record full clockwise and counterclockwise rotation angles of both fins. Note all discrepancies. Prior to disassembly, and while each fin indicator is at zero degrees, mark the alignment various components (e.g. tiller arms/yokes, feedback linkage adjustments, etc.) for proper reinstallation.

3.2.2 Remove, clean, inspect, internally preserve, and test both fins. The Contractor must perform the following. Refer to all drawings, technical publications, and other documents beneath section 2 above, as applicable.

NOTE

Piece 20 in TP-8010B and TP-8911B (Shaft Retaining Ring) prevents the fin shaft from being lowered outboard unless first removed. Follow disassembly/reassembly instructions provided in TP-8010B and TP-8911B.

3.2.2.1 Disassemble and inspect PORT and STBD Fin Assemblies (Hull Units). Disassemble each unit to gain access to all the components affecting lower bearing and seal (e.g. fin blade, lower seal, fin shaft, lower bearing, etc.). Clean and visually inspect all accessible fin system surfaces for damage, excessive wear, and excessive scale/dirt/etc. To the greatest extent practicable verify Chock Fast bed is installed correctly, fully intact, and not damaged. Measure and record fin shaft OD critical dimensions, at 12-6 o'clock and 3-9 o'clock positions, at the 4 locations along the shaft shown on page 1-2-25 of TP-8911B Vol 1. and make note of any discrepancies to shaft surface finish.

3.2.2.2 Submit inspection and test report. **Submit a CIR** to document a full description of each discrepancy. Include in the report recommended repairs including justification for those repairs, photo-images of the discrepancies, and all measurement data taken.

3.2.2.3 Pressurize fin voids to 2 psig and hold for 10 minutes in accordance with SFLC Std Spec 0740, Appendix C, verify no leaks.

3.2.2.4 Preserve internal fin surfaces. Preserve fin internal surfaces by filling all appendage interior surfaces with a rust preventive compound conforming to MIL-PRF-16173, Class II, Grade 3. Drain, collect, and dispose of remaining compound in accordance with all applicable Federal, state, and local regulations. Chase all fin blade plug female threads prior to reinstalling plugs. Renew drain plugs (with either stainless steel, Type 316 or Monel). Coat new plugs prior to installation with a sealing and locking compound conforming to ASTM D5363-AN0123 or a flexible joint compound conforming to MIL-S-45180, Type II.

NOTE

Preservation of fin blade external surfaces is covered under U/W Body, Preserve (100%).

3.2.2.5 Renew components. Using TP 8010B as guidance, renew upper bearings, lower bearings, and all disturbed seals and soft components (e.g. gaskets, o-rings, etc.).

3.2.3 Reinstall fin assemblies. Upon completion of all inspections and authorized maintenance and repairs, reassemble and reinstall the port and starboard fin blade assemblies. Ensure each fin is installed using original match-marks and is aligned to within plus or minus 1/2 degree of the pilothouse fin angle indicator.

3.2.4 Touch-up preservation requirements. Prepare and coat all new and disturbed interior and exterior surfaces to match existing adjacent surfaces, in accordance with SFLC Std Spec 6310, Appendix A (Cutter and Boat Exterior Painting Systems). Abide by all touch-up requirements outlined in SFLC Std Spec 0000, Appendix A (Requirements for Preservation of Ship Structures).

NOTE

3.3 Sub-paragraphs are describe requirements for performing conditional tasks that may be initiated by change request/modification pending inspections.

3.3 Conditional repair task requirements. If the KO approves a change request that specifies growth repairs to correct discrepancies, the Contractor must conform to all aforementioned requirements, and the following requirements.

3.3.1 Fin blade and stock assembly renewal. The Government reserves the right to furnish a new fin assembly for installation in place of the existing rudder assembly. If the Government exercises this right, the Contractor must turn over the designated components to the Coast Guard PA as an MTI items.

NOTE

Coast Guard personnel will operate all shipboard machinery and equipment.

3.4 Final operational tests. After completion of reassembly work, prior to coming out of drydock, and in the presence of the COR/PE or Coast Guard Inspector, the Contractor must thoroughly test and demonstrate the fin stabilizer system (all modes of control) and fins to prove all repairs to ensure the fins travel smoothly throughout the full range of motion without chattering or binding and at the required rate of train. The fin hydraulic system must be operated in all modes of control from all locations. Compare post-repair results with the pre-repair results to detect discrepancies. Ensure the fins are aligned to center position before going back in the water. Correct all discrepancies. Submit a CFR to document fully satisfactory operation.

3.4.1 Sea trail tests. Test the fin stabilizer system, after the vessel is waterborne, to ensure the fins travel smoothly throughout the full range of motion without chattering or binding and at the required rate of train. The fin stabilizer system must be operated in all modes of control from all locations. Compare waterborne results with the drydocked results to detect any abnormalities. While underway on sea trails, in the presence of a Coast Guard Inspector, monitor fin stabilizer system operation. Correct all discrepancies. Submit a CFR to document fully satisfactory operation.

4. NOTES

This section is not applicable to this work item.

WORK ITEM 16: Bow Thruster Propeller and Tunnel, Inspect and Repair

1. SCOPE

1.1 Intent. This work item describes the requirements for the Contractor to inspect and perform maintenance on the bow thruster unit.

1.2 Government-furnished property.

MTI	ITEM DESCRIPTION	NSN/PN	QTY	ESTIMATED COST ($/UNIT)
N	**Set of bevel gears 19:28, Mfr: Schottel	NSN: 3020-01-618-1133 PN: 1088301	1st.	10,378.13
Y	**Propeller, Mfr: Schottel	NSN: PN: 1161329	1ea.	20,000.00

***Government-loaned property, which must be returned to the vessel upon completion of the availability.**
****New or refurbished equipment that the Government may provide for installation in place of existing equipment.**
*****Government-furnished property, which is to be supplied by either the vessel or the C4IT Service Center.**

2. REFERENCES

COAST GUARD DRAWINGS

Coast Guard Drawing 154 WPC 204-301, Rev F, Equipment Removal Plan

Coast Guard Drawing 154 WPC 568-201, Rev B, Bow Thruster System A&D

Coast Guard Drawing 154B WPC 568-201, Rev -, Bow Thruster System A&D

Coast Guard Drawing 154 WPC 633-301, Rev C, Cathodic Protection System

COAST GUARD PUBLICATIONS

Coast Guard Technical Publication (TP) 8096B, SWBS 252, Aug 2018, Bowthruster – Model 60 LK with Operator Panel and Motor Drive – Installation, Service, and Operation Manual

Surface Forces Logistics Center Standard Specification 0000 (SFLC Std Spec 0000), 2022, General Requirements

Surface Forces Logistics Center Standard Specification 3020 (SFLC Std Spec 3020), 2022, Overhaul AC Electrical Motors

Surface Forces Logistics Center Standard Specification 5000 (SFLC Std Spec 5000), 2022, Auxiliary Machine Systems

Surface Forces Logistics Center Standard Specification 6310 (SFLC Std Spec 6310), 2022, Requirements for Preservation of Ship Structures

OTHER REFERENCES

Coast Guard Maintenance Procedure Card (MPC) B10017.D, CONVERSION B/T ANODE BOLT (1 Time, 01-32)

3. REQUIREMENTS

3.1 General.

3.1.1 CIR. The Contractor must submit a CIR for the inspections listed in the following paragraph(s):

- 3.2.2.3 Submit inspection and test report.

3.1.2 Tech Rep. Qualifications for performing bow thruster maintenance and repairs. If requested by the KO, submit evidence that one or more on-site technicians has successfully overhauled, renewed, or repaired the Schottel Transverse Thruster equipment/system, or a similar model of bow thruster manufactured by the same company, and further describe all knowledge, experience, and training contributing to being qualified to disassemble/reassemble the bow thruster.

3.1.3 Protective measures. The Contractor must furnish and install all protective measures in accordance with SFLC Std Spec 0000, paragraph 3.3.3 (Vessel component, space, and equipment protection).

3.1.4 Interferences. The Contractor must handle all interferences in accordance with SFLC Std Spec 0000, paragraph 3.3.5 (Interferences).

NOTE

3.2 Sub-paragraphs are mandatory tasks and requirements.

3.2 Mandatory/recurring tasks. The Contractor must:

3.2.1 Perform an initial inspection and witness an operational test. Prior to commencement of work, witness Coast Guard personnel perform an operational test of the bow thruster system to demonstrate existing operational condition. Observe all affected equipment while the system is operating to determine all discrepancies. Note all discrepancies.

3.2.2 Remove, clean, polish, inspect the bow thruster propeller and underwater gearbox. Perform the following. Refer to all drawings, technical publications, and other documents beneath section 2 above, as applicable.

3.2.2.1 Remove and inspect propeller. Remove the propeller as described Section 6.5 of TP 8096A. Polish the propeller to a 63 RMS surface finish. Inspect the propeller for damage, excessive wear, and all other discrepancies.

3.2.2.2 Remove and inspect underwater gearbox. Remove the underwater gearbox as described Section 6.7 of TP 8096A. Inspect all associated components (e.g. gears, gear teeth, etc.) for damage, excessive wear, and all other discrepancies. Max allowable gear backlash is 0.016”. Inspect for discrepancies (e.g. coatings failures, corrosion, pitting, etc.) at the interface between the gearbox and hull plate inserts/bedplates, and on all surrounding structural surfaces.

3.2.2.3 Submit inspection and test report. **Submit a CIR** to document a full description of each discrepancy. Include in the report recommended repairs including justification for those repairs, photo-images of the discrepancies, and all measurement data taken.

3.2.3 Renew tunnel and lower unit zinc anodes using bolt-on anodes. Renew zinc anodes in the bow thruster tunnel and on the lower unit housing (match existing quantities/sizes/weight of the existing anodes). New anodes must be bolt-on in lieu of weld on (stud-mounted). If this vessel is currently configured with weld-on vs. bolt-on then include a description of current configuration in the report above with a recommendation/proposal for converting to bolt-on. Refer to MPC B10017.D for suggested installation instructions.

3.2.4 Renew components. Renew the bearings that mate with the power input shaft and the propeller shaft. Renew all disturbed soft components (e.g. gaskets, o-rings, etc.). Renew all gear case oil.

3.2.5 Reinstall thruster lower unit assembly. Upon completion of all inspections and authorized maintenance and repairs, reassemble and reinstall the bowthruster lower unit and propeller.

3.2.6 Touch-up preservation requirements. Prepare and coat all new and disturbed interior and exterior surfaces to match existing adjacent surfaces, in accordance with SFLC Std Spec 6310, Appendix A (Cutter and Boat Exterior Painting Systems). Abide by all touch-up requirements outlined in SFLC Std Spec 0000, Appendix A (Requirements for Preservation of Ship Structures).

NOTE

3.3 Sub-paragraphs are describe requirements for performing conditional tasks that may be initiated by change request/modification pending inspections.

3.3 Conditional repair task requirements. If the KO approves a change request that specifies growth repairs to correct discrepancies, the Contractor must conform to all aforementioned requirements, and the following requirements.

NOTE

Coast Guard personnel will operate all shipboard machinery and equipment.

3.4 Operational test – post repairs. After completion of work, the Contractor must thoroughly test, in the presence of the Coast Guard Inspector and demonstrate the bow thruster system to be in satisfactory operating condition over entire range of RPM in both directions. Submit a CFR.

3.5 Sea trial test of bow thruster. During post docking sea trials test the bow thruster over entire range of RPM in both directions. Submit a CFR.

4. NOTES

This section is not applicable to this work item.

WORK ITEM 17: Stern Launch Door, Inspect and Preserve

1. SCOPE

1.1 Intent. This work item describes the requirements for the Contractor to remove, inspect, preserve, and reinstall the stern launch door. Table 1 below designates the level of preparation and coating application that is required for this contract.

TABLE 1 – PRESERVATION SCOPE

"100%" OR "PARTIAL"	ITEM
100%	Stern Launch Door
PARTIAL	PORT Hydraulic Door Cylinder
PARTIAL	STBD Hydraulic Door Cylinder

1.2 Government-furnished property.

None.

2. REFERENCES

COAST GUARD DRAWINGS

Coast Guard Drawing 154 WPC 169-201, Rev C, Structural Closure Stern Gate

Coast Guard Drawing 154B WPC 169-201, Rev -, Structural Closure Stern Gate

Coast Guard Drawing 154 WPC 633-301, Rev C, Cathodic Protection System

COAST GUARD PUBLICATIONS

Coast Guard Technical Publication (TP) 8001B, SWBS 633, Sep 2018, Cathodic Protection System – Model CA44227

Surface Forces Logistics Center Standard Specification 0000 (SFLC Std Spec 0000), 2022, General Requirements

Surface Forces Logistics Center Standard Specification 5000 (SFLC Std Spec 5000), 2022, Auxiliary Machine Systems

Surface Forces Logistics Center Standard Specification 6310 (SFLC Std Spec 6310), 2022, Requirements for Preservation of Ship Structures

OTHER REFERENCES

None

3. REQUIREMENTS

3.1 General.

3.1.1 CIR. The Contractor must submit a CIR for the inspections listed in the following paragraph(s):

- 3.2.4 Report.

3.1.2 Tech Rep.

None.

3.1.3 Protective measures. The Contractor must furnish and install all protective measures in accordance with SFLC Std Spec 0000, paragraph 3.3.3 (Vessel component, space, and equipment protection).

3.1.3.1 Layup of door actuators, controls, and sensors. The Contractor must take all necessary precautions to prevent introduction of contaminates into the hydraulic system and prevent damage to hydraulic system components (e.g. cylinder rod plated surfaces, switches and control stations, electric cables, etc.). Protect all components from overspray and damage. Do not open the hydraulic system (i.e. break hose connections to cylinders, etc.) unless absolutely necessary. If breeching the system boundary is required blank off each opening created with sheet metal discs and tape to completely seal the opening.

3.1.4 Interferences. The Contractor must handle all interferences in accordance with SFLC Std Spec 0000, paragraph 3.3.5 (Interferences).

3.2 Mandatory/recurring tasks. The Contractor must:

NOTE

Coast Guard personnel will operate all shipboard machinery and equipment.

3.2.1 Operational test - initial. Prior to commencement of work, the Contractor must witness Coast Guard personnel perform an initial operational test of all items or shipboard devices that will be disturbed, used, repaired, or altered, to demonstrate existing operational condition. Document all discrepancies identified.

WARNING!

Adequately support the door at all times. Door may warp/bend/distort if not supported properly.

If weld repairs are required, prevent distortion by minimizing heat transferred to door.

Stern door arms may be compressed at installation. Brace stern door arms prior to disassembly to prevent unexpected/inadvertent springing.

3.2.2 Remove and inspect door. Remove the stern launch door from the cutter to gain access to all surfaces (bearings, pins, etc.), taking all necessary precautions to prevent damage during disassembly and transport. Thoroughly inspect all door surfaces to identify all discrepancies (e.g. damage, deformation, excessive wear, corrosion, material defects, etc.).

3.2.3 Clean and inspect all associated components. Clean and inspect all components associated with the door (e.g. hydraulic cylinders and hoses, door hinge pins and clevises, bushings/bearings,

fasteners/studs/hardware, control valves and manifolds, etc.) to identify all discrepancies (e.g. damage, deformation, excessive wear, corrosion, material defects, etc.).

3.2.4 Report. **Submit a CIR** detailing all discrepancies and recommended repairs.

3.2.5 Preserve all of the specified stern launch door surfaces. Prepare and coat all of the stern launch door surfaces as specified in Table 1 above using the appropriate coating system, by location and material type, specified in Table 2 below, and in accordance with SFLC Std Spec 6310.

- If "100%" is specified in Table 1 then the entire surface must be completely taken down to bare metal using an approved preparation method for the particular substrate material type (e.g. SSPC SP-10, SSPC-SP WJ-2(M)/NACE WJ-2(M), etc.), as specified in SFLC STD SPEC 6310) and all coatings renewed.
- If "Partial" is specified in Table 1, then inspect and identify all damaged coatings (e.g. rust areas, discolored area, bubbling in coatings, etc.). Include in the report above a description of all discrepancies and proposed coatings repairs. After the KO has released a change request perform those coatings repairs in accordance with SFLC STD SPEC 6310. After all authorized coatings repairs have been completed, roughen/abrade all surfaces of the entire surface to provide a suitable surface profile and apply one finish coat, not to exceed 6 mils DFT, to the entire component/surface.

TABLE 2 – COATING SYSTEMS

SURFACE	REQUIRED COATING SYSTEM (SEE TABLE IN SFLC STD SPEC 6310, APPENDIX A)	TOPCOAT COLOR
Plate and component surfaces ABOVE the boot top line	Freeboard/ Superstructure, Aluminum or Galvanized Steel – Option II	White (17925)
Plate and component surfaces AT OR BELOW the boot top line	U/W Body and Boot-Top, Aluminum Hull, High Speed (>30 knots) (NOTE: Same as Underwater Body System specified in the work item titled "U/W Body, Preserve ")	Boot Top - Black (17038) Below Boot Top - Red (11105)
Door hydraulic cylinders	Machinery, Deck, Option I or Option II (cylinders may be powder coated, submit proposed coating system for Coast Guard approval prior to powder coating)	White (17925)

3.2.6 Renew both zinc anodes. Renew both zinc anodes, piece 14 of Coat Guard Drawing 154 WPC 633-301.

3.2.7 Renew door soft-parts. Renew all disturbed soft-parts (e.g. seals, gaskets, bumpers, etc.), and all soft-parts directly associated with the door.

3.2.8 Reinstall door and groom. Reinstall the stern launch door and all associated components to the original configuration. Lubricate all uncoated/bearing surfaces with grease conforming to MIL-PRF-24139. Operate the door and make all necessary adjustments to hydraulics and threaded adjustments to facilitate proper operation.

NOTE

Coast Guard personnel will operate all shipboard machinery and equipment.

3.3 Operational test, post repairs. After completion of work, the Contractor must thoroughly test, in the presence of the Coast Guard Inspector and demonstrate all items or shipboard devices that have been disturbed, used, repaired, altered, or installed to be in satisfactory operating condition. Submit a CFR.

4. NOTES

This section is not applicable to this work item.

WORK ITEM 18: Sewage and Grey Water System, Clean and Inspect

1. SCOPE

1.1 Intent. This work item describes the requirements for the Contractor to clean the sewage and grey water system (e.g. tanks, piping, etc.) and renew designated atmospheric valves.

TABLE 1
USE OF COAST GUARD SEWAGE AND GREY WATER DISPOSAL FACILITIES
(PARA 3.3.5.2)

NO

1.2 Government-furnished property.

MTI	ITEM DESCRIPTION	NSN/PN	QTY	ESTIMATED COST ($/UNIT)
N	**Sewage Tank Zinc Anode	NIIN: 014474686	2	142.19

***Government-loaned property, which must be returned to the vessel upon completion of the availability.**
****New or refurbished equipment that the Government may provide for installation in place of existing equipment.**
*****Government-furnished property, which is to be supplied by either the vessel or the C4IT Service Center.**

2. REFERENCES

COAST GUARD DRAWINGS

Coast Guard Drawing 154 WPC 127-302, Rev C, Potable Water & Sewage Tank Fabrication Details

Coast Guard Drawing 154 WPC 506-201, Rev A, Fills Vents, Sounds, and Overflows

Coast Guard Drawing 154B WPC 506-201, Rev A, Fills Vents, Sounds, and Overflows

Coast Guard Drawing 154 WPC 506-301, Rev -, Fills, Vents, Sounds, Overflows Diagram

Coast Guard Drawing 154 WPC 528-301, Rev B, Grey Water System Diagram

Coast Guard Drawing 154 WPC 593-201, Rev F, Sewage System Arrangement

Coast Guard Drawing 154 WPC 593-301, Rev C, Sewage System Diagram

Coast Guard Drawing 154B WPC 593-201, Rev A, Sewage System Arrangement

Coast Guard Drawing 154B WPC 593-301, Rev -, Sewage System Diagram

Coast Guard Drawing 154 WPC 593-303, Rev A, Sewage Control System

Coast Guard Drawing 154 WPC 601-302, Rev D, General Arrangement

Coast Guard Drawing 154B WPC 601-302, Rev -, General Arrangement

Coast Guard Drawing 154 WPC 633-301, Rev C, Cathodic Protection System

COAST GUARD PUBLICATIONS

Surface Forces Logistics Center Standard Specification 0000 (SFLC Std Spec 0000), 2022, General Requirements

Surface Forces Logistics Center Standard Specification 6310 (SFLC Std Spec 6310), 2022, Requirements for Preservation of Ship Structures

OTHER REFERENCES

ASTM International (ASTM) D1330, 2010, Standard Specification for Rubber Sheet Gaskets

3. REQUIREMENTS

3.1 General.

3.1.1 CIR. The Contractor must submit a CIR for the inspections listed in the following paragraph(s):

- 3.2.1 Inspection of Grey Water Tank.

3.1.2 Tech Rep.

None.

3.1.3 Protective measures. The Contractor must furnish and install all protective measures in accordance with SFLC Std Spec 0000, paragraph 3.3.3 (Vessel component, space, and equipment protection).

3.1.4 Interferences. The Contractor must handle all interferences in accordance with SFLC Std Spec 0000, paragraph 3.3.5 (Interferences).

3.1.5 Temporary Sanitary and Sewage Facilities. Whenever sewage or grey water collection service is disrupted due to Contractor repairs, the Contractor must provide temporary facilities in accordance with SFLC Standard Spec 0000 par 3.2.11.

3.1.6 Temporary HVAC. If the Contractor's proposed cleaning plan will degrade continuous operation of the ship's HVAC system then the Contractor must provide temporary ventilation to all impacted areas equivalent to the normal zonal ventilation rating for those spaces (i.e. maintain existing climate control) for the duration of work as described in SFLC Std Spec 0000.

3.1.7 Refer to all references beneath section 2 above, as applicable.

NOTE

Be aware that the grey water system has few isolation valves and many openings that must be plugged or blanked to contain cleaning media.

Be aware that AC condensate drains into the Grey Water Tank at 8 separate locations. Any temporary disruption or degradation of climate control must be fully addressed by the cleaning plan.

For these reasons, based on lessons learned, it is suggested that chemical cleaning be used on sewage piping and grey water system piping be cleaned mechanically (e.g. waterjetting, etc.)

3.1.8 Cleaning Plan. No later than 7 days after the arrival conference, and prior to the start of cleaning work, the Contractor must submit a cleaning plan CFR that contains the following:

- A list of qualified personnel who will disassemble machinery or handle chemicals.
- An SDS for every chemical proposed for use.
- A step by step description of the procedures and methods that will be used to clean the systems
- A list of locations in the sewage and grey water piping system where piping lines will be opened and components will be removed. At a minimum the piping must be opened at 3 separate sewage system clean-out locations and 3 separate grey water system clean-out locations for "before and after" inspections to determine the extent of cleaning required and to verify cleaning was adequately performed. These locations must be pre-approved by the COR and included in the cleaning plan CFR.

NOTE

Coast Guard personnel will operate all shipboard machinery and equipment.

3.2 Operational test and inspection - initial. Prior to commencement of cleaning work, the Contractor must witness Coast Guard personnel perform an operational pre-test of all items and shipboard devices to be disturbed, used, repaired, or altered, (e.g. TLIs, pumps, etc.) to demonstrate existing operational condition and to determine a more precise scope of cleaning required. Submit a CFR detailing any required growth work or repairs identified during the operational test based on the observed condition of the systems. Use the most economical methods for accomplishing the work.

3.2.1 Inspection of Grey Water Tank. Open and inspect the grey water tank to determine the condition of the grey water tank coating system to the greatest extent practicable, pre-cleaning. Submit a CIR detailing the condition of the grey water tank coating system and any noted discrepancies, include an estimated square footage of failed coating in the CIR.

3.3 Atmospheric Valve Renewals (CSMP 2025005). The Contractor must renew the following atmospheric valves using Coast Guard Drawings 154 WPC 506-201 and 154 WPC 506-301 as reference:

- Grease Trap Vent (TV-V-1-20-2)
- Atmospheric Vents (TV-V-1-7-1), (TV-V-1-5-2), and (TV-V-1-17-2)

3.4 Cleaning and Inspection Requirements. After the COR approves the "Cleaning Plan" the Contractor must clean the piping and tanks and in accordance with the approved "Cleaning Plan", and as described below. Clean, in their entirety, all sewage and grey water system interior surfaces (e.g. sewage and grey water ppg interiors, pump interiors, valve interiors, all sewage and grey water tank vent lines interiors, sewage vacuum switch manifold interiors, fire main sprinkler pipe interiors and spray hole interiors in main sewage tank used to flush sewage tank, overboard/to shore connection discharge pump and all related valve and pipe interiors, etc.) that may come in contact with sewage or grey-water, by removing all obstructions, clogs, uric scale, and waste build-up on piping and component interiors, ensuring subsequent free unobstructed flow of waste solids and fluids.

NOTE

Depending on the condition of the system at the contract start date, chemical cleaning may not adequately remove all obstructions, scale, and build-up present. More intrusive cleaning methods, such as pressure washing, flexible auger cleaning, or other mechanical means of cleaning, may be required to remove all obstructions, scale, etc. These more intrusive methods are in scope of this work item and the Contractor may be required to use one or more them, in the appropriate quantities, to achieve minimum cleaning requirements.

NOTE

Before filling a system with descaler ensure all openings below the fill point are blanked off or plugged.

3.4.1 Chemical Cleaning of Piping. When chemically cleaning piping and component interiors use a commercially available biodegradable sewage/grey-water system descaler (e.g. SEW CLEAN, etc.) safe for use on stainless steel. Fill the systems with descaler and hold for a long enough period to clean the systems as described above. After cleaning is complete drain and dispose of all sewage and grey water system contents.

3.4.2 Tank Cleaning. Interior surfaces of the Grey Water Tank 3-17-0-W, Sewage Holding Tank 2-4-0-W, and sewage vacuum accumulation tank must be cleaned until free of all foreign materials, sediment, and sludge. Remove all persistent residues, residual wash media, and moisture with clean lint-free cloths. Remove, clean, and re-install all tank interior components (e.g. TLIs, limit switches, eductors, etc.). Renew all sewage tank and grey water tank zinc anodes that have lost more than 50% of their material using Government-furnished property, otherwise reuse the existing zinc anodes. Remove and dispose of all sewage system contents and collect, contain, and dispose of all wash media and cleaning materials in accordance with all applicable Federal, state, and local regulations. Remove all unused chemicals from USCG property immediately upon completion of work item.

3.4.3 Inspections. After cleaning, inspect the piping interior at the locations specified in the "Cleaning Plan" using a borescope in the presence of the COR, verify that all solid deposits, visible to the unmagnified eye, have been removed. Visually inspect all system components (e.g. TLIs, limit switches, pressure switches, tank interior surfaces, fasteners, gasket seating surfaces, manhole cover surfaces, etc.) for excessive wear, damage, and all other notable discrepancies. Open and vacuum-clean the control panel assembly and inspect for any indications of overheating or loose wiring or connections. Submit a CFR.

3.4.4 Miscellaneous. Do not drain any fluids (e.g. sewage, grey water, fresh water, etc.) into any space, bilge, or exterior location. Take all precautions required to prevent contamination of personnel and spaces in accordance with all applicable Federal, state, and local regulations. Renew all disturbed soft components (e.g. seals, gaskets, o-rings, etc.). Do not use the sewage pump installed in the system to offload sewage system contents.

3.4.4.1 Plug log. Plug all unattended openings in the system. Plugs must be fitted with a lanyard, ring or other device to prevent loss of the plug inside the system. Create and maintain a written log of each plug

that specifies the location of each. Remove and dispose of all plugs upon completion of work. Furnish the plug log to the Coast Guard Inspector during the performance of close-out inspections.

3.4.4.2 Use of Coast Guard Sewage and Grey Water Disposal Facilities. If "YES" is denoted in Table 1 – (Use of Coast Guard Sewage and Grey Water Disposal Facilities), beneath paragraph 1.1 (Intent), the Contractor may offload and dispose sewage and grey water system contents into the Coast Guard pier facility tanks in lieu of a Contractor furnished tank truck, otherwise the Contractor must dispose of all waste using the Contractor's disposal facilities.

3.5 Closing tanks. The Contractor must notify the COR at least 24 hours prior to closing the tank. After completion of all authorized repairs and after the COR inspects all work performed, close the tanks.

NOTE

Coast Guard personnel will operate all shipboard machinery and equipment.

3.6 Operational test – post repairs. After completion of work, the Contractor must thoroughly test all disturbed components and systems and accomplish the following tasks in conjunction with each other as appropriate, in the presence of the Coast Guard Inspector, and submit a CFR:

3.6.1 Adjust the set point on each of the vacuum pressure switches (as applicable) to the set points noted previously.

3.6.2 Verify operation of the low and high level switches/alarms and that the pumps cycle from lead to lag status during operation. Demonstrate proper operation of tank TLIs to prove satisfactory operating condition.

3.6.3 Leak test. After all system components are reinstalled, the Contractor must test all disturbed piping for leaks, as follows:

- Run water down all disturbed grey water system piping runs for 5 minutes.
- Ensure the system holds vacuum without cycling for at least 20 mins.
- Place both vacuumarator selection switches in the "RUN" position. Allow vacuumarator pump to run until system operating pressure of -0.40 to -0.55 bar is reached. Observe vacuum tank pressure gauge. Place both vacuumarator selection switches in the "OFF" position. (NOTE: A vacuum loss of more than 0.14 bar indicates an air leak exists in the system.) Verify vacuum system pressure remains between -0.40 to -0.55 bar for 20 minutes. Record pressure value and include in the CFR.
- Perform smoke leak test on vacuum portions of the sewage system where the Contractor has disturbed a mechanical joint.
- Closely monitor the systems for leaks. Repair all leaks detected. Repeat test and inspection tasks until no leaks are detected.

3.6.4 Upon completion of testing and, in the presence of the Coast Guard Inspector, pump tanks to the limit of the ship's installed pumps.

3.7 Touch-up preservation. The Contractor must prepare and coat all new and disturbed exterior and interior surfaces to match existing adjacent surfaces, in accordance with SFLC Std Spec 6310, Appendix A (Cutter and Boat Exterior Painting Systems) and Appendix B (Cutter and Boat Interior Painting

Systems), respectively, and as applicable. Abide by all touch-up requirements outlined in SFLC Std Spec 0000, Appendix A (Requirements for Preservation of Ship Structures).

4. NOTES

This section is not applicable to this work item.

WORK ITEM 19: Freeboard, Preserve

1. SCOPE

1.1 Intent. This work item describes the requirements for the Contractor to preserve the following exterior surfaces.

TABLE 1 – AREAS TO BE PRESERVED

"100%" OR "PARTIAL" OR "NO WORK"	ITEM	DESCRIPTION OF SURFACES
100%	1	Freeboard Surfaces

If "100%" appears in the left column then the corresponding surface must be completely taken down to bare metal and all coatings renewed as described in paragraph 3.2, if "PARTIAL" then all failed coatings must be renewed and a top-coat must be applied over the entire surface as described in paragraph 3.2, if "NO WORK" is specified then do not prep/preserve the surface.

1.2 Government-furnished property.

None.

2. REFERENCES

COAST GUARD DRAWINGS

Coast Guard Drawing 154 WPC 131-301, Rev D, Scantlings Main Deck
Coast Guard Drawing 154B WPC 131-301, Rev B, Scantlings Main Deck
Coast Guard Drawing 154 WPC 171-201, Rev D, Mast A&D
Coast Guard Drawing 154B WPC 171-201, Rev A, Mast A&D
Coast Guard Drawing 154 WPC 171-601, Rev D, Mast Prefab
Coast Guard Drawing 154 WPC 251-301, Rev D, Combustion Air Diagram
Coast Guard Drawing 154B WPC 251-301, Rev -, Combustion Air Diagram
Coast Guard Drawing 154 WPC 405-201, Rev D, Antenna A&D
Coast Guard Drawing 154B WPC 405-201, Rev -, Antenna A&D
Coast Guard Drawing 154 WPC 405-202, Rev A, Antenna Arrangement and Installation
Coast Guard Drawing 154B WPC 405-202, Rev -, Antenna Arrangement and Installation
Coast Guard Drawing 154 WPC 406-301, Rev G, Schedule of Bonding and Grounding
Coast Guard Drawing 154B WPC 406-301, Rev C, Schedule of Bonding and Grounding
Coast Guard Drawing 154 WPC 422-301, Rev F, Electrical Navigational Aids

Coast Guard Drawing 154B WPC 422-301, Rev -, Electrical Navigational Aids

Coast Guard Drawing 154 WPC 601-302, Rev D, General Arrangement

Coast Guard Drawing 154B WPC 601-302, Rev -, General Arrangement

COAST GUARD PUBLICATIONS

Surface Forces Logistics Center Standard Specification 0000 (SFLC Std Spec 0000), 2022, General Requirements

Surface Forces Logistics Center Standard Specification 6310 (SFLC Std Spec 6310), 2022, Requirements for Preservation of Ship Structures

OTHER REFERENCES

The Society for Protective Coatings (SSPC)/NACE International (NACE No.2 2004, Near White Blast Cleaning)

MIL-PRF-24635, 2009, Coating Systems, Weather-Resistant, Exterior Use

Federal Standard (FED-STD) 595, 2008, Colors Used In Government Procurement

DOD-STD-2003, Dec 1990, Electric Plant Installations, Standard Methods for Surface Ships and Submarines (Cable), Figures 1B5, 3B19, 3B20, 3B21

MIL-PRF-24667, Jun 2005, Coating system, Non-Skid, for Roll or Spray Application

QPL-24667, May 2006, Qualified Product List of Products Qualified under Performance Specification MIL-PRF-24667, Coating system, Non-Skid, for Roll or Spray Application

Commercial Item Descriptions (CID) A-A-59316, Nov 2003; Abrasive Materials for Blasting

3. REQUIREMENTS

3.1 General.

3.1.1 CIR. "3.1.8 Substrate inspection report."

3.1.2 Tech Rep. None.

3.1.3 Protective measures. The Contractor must furnish and install all protective measures in accordance with SFLC Std Spec 0000, paragraph 3.3.3 (Vessel component, space, and equipment protection).

3.1.3.1 Store and protect all equipment that has been removed from the vessel to facilitate preservation to ensure the items remain completely free of damage. If the removal of equipment exposes an uncoated/unprotected surface on the vessel, those surfaces must also be protected from all damage while the equipment is removed.

3.1.4 Interferences. The Contractor must handle all interferences in accordance with SFLC Std Spec 0000, paragraph 3.3.5 (Interferences).

3.1.5 Pre-surface preparation wash. The Contractor must accomplish low-pressure (less than 5,000 psi) fresh water wash of all affected surfaces, to remove soluble chlorides and other surface contaminants. Capture, contain, and dispose of wash water for proper disposal in accordance with all Federal, state and local regulations.

3.1.6 In-process quality control measures. The Contractor must abide by all the safety, preservation, and quality control requirements specified in SFLC Std Spec 0000, paragraph 3.2.4.2 (In-process QC measures for "critical-coated surfaces).

3.1.7 Surface preparation optional methods. For steel surfaces, the Contractor may use either high/ultrahigh pressure water jetting or abrasive blasting to achieve the required surface preparation, prior to application of the coating system specified in 3.6 (Preservation requirements). The Contractor may add abrasives to the waterjet stream, for one or both of the following reasons:

- Achieving greater productivity.
- Achieving the required surface profile.

NOTES

1. Surface preparation may be accomplished by waterjetting, abrasive-blasting, or a combination of the two.

2. Waterjetting only reveals an existing substrate anchor profile and does not create a new profile. Abrasive may be introduced to the waterjet stream, to achieve required surface profile and/or greater productivity.

3. All surfaces being preserved are considered "critical-coated surfaces".

3.1.7.1 Preparation of aluminum surfaces by abrasive blasting. When abrasive blasting aluminum ensure that the abrasive material is an aluminum oxide, garnet or equivalent inert material conforming CID A-A-59316, Type I & IV.

3.1.8 Substrate inspection report. After the various surfaces have been prepared, and in the presence of the COR, the Contractor must visually inspect all surfaces to identify and document all discrepancies. Prior to application of the first coat **Submit a CIR** detailing the findings of the substrate inspections and all recommended repairs. After the KO releases a CR, repair all substrate discrepancies, prior to final coatings application. Do not put a final/permanent primer coat on discrepant substrate without prior authorization by the COR.

3.2 Preservation requirements and particulars. The Contractor must preserve all surfaces specified in Table 1 above while conforming to the corresponding requirements specified in Table 2 below, and in accordance with all requirements in SFLC STD SPEC 6310.

- If "100%" is specified in Table 1 for the corresponding surface then the entire surface shall be completely taken down to bare metal using an approved preparation method for the particular substrate material type (e.g. SSPC SP-10, SSPC-SP WJ-2(M)/NACE WJ-2(M), etc.), as specified in SFLC STD SPEC 6310) and all coatings renewed.
- If "Partial" is specified in Table 1 for the surface, then inspect and identify all damaged coatings (e.g. rust areas, discolored area, bubbling in coatings, etc). Include in the report specified above a description of all discrepancies and proposed coatings repairs. After the KO has released a change request perform those coatings repairs in accordance with SFLC STD SPEC 6310. After all coatings repairs have been performed, roughen/abrade all surfaces of the entire assembly/surface to provide a suitable surface profile and apply one finish coat, not to exceed 6 mils DFT, to the entire component/surface.
- If "No Work" is specified in Table 1 for the corresponding surface then no coatings work shall be accomplished on that surface (i.e. do not include preservation of that corresponding surface(s) in your quote).

- Use the top coat colors specified in Table 3 where applicable.

TABLE 2 – COATINGS SYSTEM REQUIREMENTS

SURFACE	REQUIRED COATING SYSTEM (SEE TABLES IN SFLC STD SPEC 6310)	OTHER TASKS, STANDARDS, AND SPECIFICATIONS FOR THE PARTICULAR SURFACE
Freeboard (See 3.2.1 for def.)	Appendix A Freeboard/Superstructure, Steel - Option I or Option II Topcoat Color: White (17925)	TEARDROP AREA COATINGS SYSTEM SPECIFICATIONS: MDE and Generator TEARDROP areas must be coated using a system similar to the system being applied to the rest of the freeboard, but with these additional attributes: • capable of withstanding substrate temperatures of up to 500 deg F • capable of withstanding temperature gradients experienced when those hot surfaces are splashed with rain and sea water at near freezing temperatures (32 deg F). • paragraph 4.3 below describes a system that meets the above high temp specification. An equivalent system is acceptable, but only after Coast Guard evaluation/acceptance, submit that description of the proposed equivalent system with "Preservation Plan" (see para 3.2 of SFLC STD SPEC 6310). ---------- All miscl markings (e.g. Coast Guard Emblems, letters, numbers, stripes, etc.) may be Vinyl stickers or painted. If painted conform to SFLC Std Spec 6310, Coast Guard Drawings FL 2804-12, and FL 2804-22 as applicable. Taff Rail topcoat color must be Spar (10371). 100% of Taff Rail exterior surfaces must be coated (no 4" bare surface at the top). OR Leave a 4 inch bare aluminum strip on the working surface of the Taff Rail. Polish that bare aluminum strip to a 125 microinch surface finish to avoid damaging towing lines.

TABLE 3 - COLORS FOR MISCELLANEOUS DETAILS

COMPONENT	*TOP COAT COLOR
Freeboard – "Tear Drop"	Black (17038)
Awning Ridgepoles	White (17925)
Bitts, towing	Spar (10371) except where line lays and runs; do not paint.
Chocks, brass/bronze	Uncoated
Chocks, bulwark	Match bulwark color
Chocks, except bulwark and roller type	Spar (10371)
Chocks, Roller	Black (17038)
Handrails and Lifeline Stanchions	White (17925)
Knife edges on watertight doors and hatches	Do not paint.
Name Plates	No coating.
Ventilators, all types, including gooseneck pipe vents, not attached or immediately adjacent to the superstructure.	Spar (10371)
Fire fittings, valves, stations, etc.	Red (11105)

***Numbers indicated are FED-STD-595 colors.**

3.2.1 Definition of freeboard surfaces. "Freeboard surfaces" are the union of the following exterior surfaces:

- From the upper limit of the entire boot top line (i.e. top of the Underwater Body Surfaces) to the outer edge of the "Main Deck Non-Skid" and the top of the bulwark, including all associated components attached to the shell plate surfaces within those limits that have a top coat color of white (e.g. transom ladders, etc.).
- From the top of the bulwark down to the "Main Deck Non-Skid surfaces"
- All main deck stanchions and taff rails

3.3 Requirements particular to various surfaces. The Contractor must conform to the following:

3.3.1 Repair of un-intended damages. The Contractor must repair all damages (including overspray) incurred to vessel surfaces (including those not covered by the intended scope of this work item), during surface preparation and paint application procedures.

4. NOTES

4.1 Unit's responsibility. Unit crew will install new superstructure DC decals, compartment check-off holders, and name plates, after the completion of work.

4.2. Although there may be several possible procurement sources for the Coast Guard Emblem decals and vinyl adhesive letters and numbers, one known source is:

Brace Enterprises
10250 SE 138 Terrace
Dunnellon, FL 34431

352-489-4442 / Fax: 352-489-4476
www.braceenterprise.com

4.3 Below is an acceptable option for the tear drop area coatings system, alternate equivalent systems may be accepted pending evaluation.

TEARDROP for MDE and Generator exhaust (see TEARDROP sketch) 1" Overlap Intergard 264 FPL274/FPA327 Epoxy (Red) at the outer perimeter	
1st coat Stripe Coat Interbond 1202UPC Metallic Grey HTA160/HTA166	N/A
2nd coat Interbond 1202UPC Metallic Grey HTA160/HTA166	4 mils
3rd coat Interbond 1202UPC Metallic Grey HTA160/HTA166	4 mils
4th coat Stripe Coat Intertherm 50 Black HTA099	N//A
5th coat Intertherm 50 Black HTA099	1 mil
6th coat- Intertherm 50 Black HTA099	1 mil
7th coat - Intertherm 50 Black HTA099	1 mil

Note 6: The Intergard 264 anticorrosive shall be thoroughly abraded to key the surface and promote adhesion between the coatings.

Note 7: SSPC-SP11, Bare Metal Power Tool Cleaning, optimum performance will be achieved with a minimum surface profile of 2 mils

Note 8: Surface temperature must always be a minimum of 5 degrees Fahrenheit (3 degrees Celsius) above dew point for coating application.

Note 9: For Intergard 264 Part B where T < 50° F (10° C) use FCA321 in lieu of FPA327.

Note 10: Stripe coat on tear drop must be applied by brush

Note 11: Do not over apply Intertherm 50. Application above 1.57 mils DFT will result in blistering when subject to high temperatures. Excessive dry film thickness may result in cracking. Dry film thickness must not exceed 1 mil.

Note 12: Up to 3 coats of Intertherm 50 at a maximum of 1 mil per coat can be applied without the requirement of heating between coats. This provides maximum corrosion protection when it is not possible to use a zinc silicate priming system.

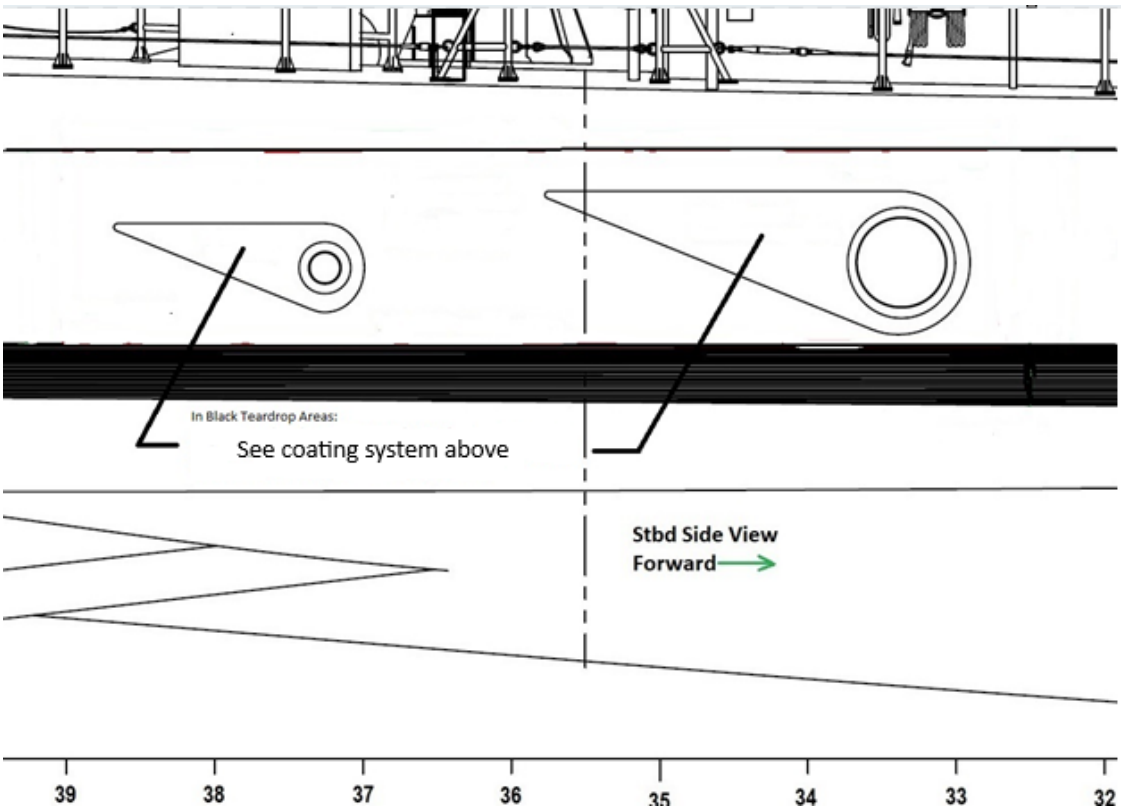

WORK ITEM 20: Weatherdecks, Preserve

1. SCOPE

1.1 Intent. This work item describes the requirements for the Contractor to preserve the following exterior surfaces.

TABLE 1 – AREAS TO BE PRESERVED

"100%" OR "PARTIAL" OR "NO WORK"	ITEM	DESCRIPTION OF SURFACES
100%	1	Main Deck Non-Skid Surfaces
100%	2	01 Deck Non-Skid Surfaces
Partial	3	All Deck Machinery

If "100%" appears in the left column then the corresponding surface must be completely taken down to bare metal and all coatings renewed as described in paragraph 3.2, if "PARTIAL" then all post inspection work will be negotiated by CR, if "NO WORK" is specified then do not prep/preserve the surface.

1.2 Government-furnished property.

None.

2. REFERENCES

COAST GUARD DRAWINGS

Coast Guard Drawing 154 WPC 131-301, Rev D, Scantlings Main Deck
Coast Guard Drawing 154B WPC 131-301, Rev B, Scantlings Main Deck
Coast Guard Drawing 154 WPC 171-201, Rev D, Mast A&D
Coast Guard Drawing 154B WPC 171-201, Rev A, Mast A&D
Coast Guard Drawing 154 WPC 171-601, Rev D, Mast Prefab
Coast Guard Drawing 154 WPC 251-301, Rev D, Combustion Air Diagram
Coast Guard Drawing 154B WPC 251-301, Rev -, Combustion Air Diagram
Coast Guard Drawing 154 WPC 405-201, Rev D, Antenna A&D
Coast Guard Drawing 154B WPC 405-201, Rev -, Antenna A&D
Coast Guard Drawing 154 WPC 405-202, Rev A, Antenna Arrangement and Installation
Coast Guard Drawing 154B WPC 405-202, Rev -, Antenna Arrangement and Installation
Coast Guard Drawing 154 WPC 406-301, Rev G, Schedule of Bonding and Grounding
Coast Guard Drawing 154B WPC 406-301, Rev C, Schedule of Bonding and Grounding

Coast Guard Drawing 154 WPC 422-301, Rev F, Electrical Navigational Aids

Coast Guard Drawing 154B WPC 422-301, Rev -, Electrical Navigational Aids

Coast Guard Drawing 154 WPC 601-302, Rev D, General Arrangement

Coast Guard Drawing 154B WPC 601-302, Rev -, General Arrangement

Coast Guard Drawing 154 WPC 634-301 Rev B, Deck Covering Schedule

COAST GUARD PUBLICATIONS

Surface Forces Logistics Center Standard Specification 0000 (SFLC Std Spec 0000), 2022, General Requirements

Surface Forces Logistics Center Standard Specification 6310 (SFLC Std Spec 6310), 2022, Requirements for Preservation of Ship Structures

OTHER REFERENCES

The Society for Protective Coatings (SSPC)/NACE International (NACE No.2 2004, Near White Blast Cleaning)

MIL-PRF-24635, 2009, Coating Systems, Weather-Resistant, Exterior Use

Federal Standard (FED-STD) 595, 2008, Colors Used In Government Procurement

DOD-STD-2003, Dec 1990, Electric Plant Installations, Standard Methods for Surface Ships and Submarines (Cable), Figures 1B5, 3B19, 3B20, 3B21

MIL-PRF-24667, Jun 2005, Coating system, Non-Skid, for Roll or Spray Application

QPL-24667, May 2006, Qualified Product List of Products Qualified under Performance Specification MIL-PRF-24667, Coating system, Non-Skid, for Roll or Spray Application

Commercial Item Descriptions (CID) A-A-59316, Nov 2003; Abrasive Materials for Blasting

3. REQUIREMENTS

3.1 General.

3.1.1 CIR. "3.1.8 Substrate inspection report"

None.

3.1.2 Tech Rep.

None.

3.1.3 Protective measures. The Contractor must furnish and install all protective measures in accordance with SFLC Std Spec 0000, paragraph 3.3.3 (Vessel component, space, and equipment protection).

3.1.3.1 Store and protect all equipment that has been removed from the vessel to facilitate preservation to ensure the items remain completely free of damage. If the removal of equipment exposes an uncoated/unprotected surface on the vessel, those surfaces must also be protected from all damage while the equipment is removed.

3.1.4 Interferences. The Contractor must handle all interferences in accordance with SFLC Std Spec 0000, paragraph 3.3.5 (Interferences).

3.1.5 Pre-surface preparation wash. The Contractor must accomplish low-pressure (less than 5,000 psi) fresh water wash of all affected surfaces, to remove soluble chlorides and other surface contaminants. Capture, contain, and dispose of wash water for proper disposal in accordance with all Federal, state and local regulations.

3.1.6 In-process quality control measures. The Contractor must abide by all the safety, preservation, and quality control requirements specified in SFLC Std Spec 0000, paragraph 3.2.4.2 (In-process QC measures for "critical-coated surfaces).

3.1.7 Surface preparation optional methods. For steel surfaces, the Contractor may use either high/ultrahigh pressure water jetting or abrasive blasting to achieve the required surface preparation, prior to application of the coating system specified in 3.6 (Preservation requirements). The Contractor may add abrasives to the waterjet stream, for one or both of the following reasons:

- Achieving greater productivity.
- Achieving the required surface profile.

NOTES

1. Surface preparation may be accomplished by waterjetting, abrasive-blasting, or a combination of the two.

2. Waterjetting only reveals an existing substrate anchor profile and does not create a new profile. Abrasive may be introduced to the waterjet stream, to achieve required surface profile and/or greater productivity.

3. All surfaces being preserved are considered "critical-coated surfaces".

3.1.7.1 Preparation of aluminum surfaces by abrasive blasting. When abrasive blasting aluminum ensure that the abrasive material is an aluminum oxide, garnet or equivalent inert material conforming CID A-A-59316, Type I & IV.

3.1.8 Substrate inspection report. After the various surfaces have been prepared, and in the presence of the COR, the Contractor must visually inspect all surfaces to identify and document all discrepancies. Prior to application of the first coat **Submit a CIR** detailing the findings of the substrate inspections and all recommended repairs. After the KO releases a CR, repair all substrate discrepancies, prior to final coatings application. Do not put a final/permanent primer coat on discrepant substrate without prior authorization by the COR.

3.2 Preservation requirements and particulars. The Contractor must preserve all surfaces specified in Table 1 above while conforming to the corresponding requirements specified in Table 2 below, and in accordance with all requirements in SFLC STD SPEC 6310.

- If "100%" is specified in Table 1 for the corresponding surface then the entire surface shall be completely taken down to bare metal using an approved preparation method for the particular substrate material type (e.g. SSPC SP-10, SSPC-SP WJ-2(M)/NACE WJ-2(M), etc.), as specified in SFLC STD SPEC 6310) and all coatings renewed.
- If "Partial" is specified in Table 1 for the surface, then inspect and identify all damaged coatings (e.g. rust areas, discolored area, bubbling in coatings, etc). Include in the report specified above a description of all discrepancies and proposed coatings repairs. After the

KO has released a change request perform those coatings repairs in accordance with SFLC STD SPEC 6310.

- If “No Work” is specified in Table 1 for the corresponding surface then no coatings work shall be accomplished on that surface (i.e. do not include preservation of that corresponding surface(s) in your quote).
- Use the top coat colors specified in Table 3 where applicable.

TABLE 2 – COATINGS SYSTEM REQUIREMENTS

SURFACE	REQUIRED COATING SYSTEM (SEE TABLES IN SFLC STD SPEC 6310)	OTHER TASKS, STANDARDS, AND SPECIFICATIONS FOR THE PARTICULAR SURFACE
Main Deck Non-Skid (See 3.2.1 for def.)	Appendix A Weather Deck Non-Skid, MIL-SPEC Coating for Steel or Aluminum - Option I or Option II Topcoat Color: Dark Gray (16099)	See Paragraph 3.3.2 below. Ensure all safety markings (e.g. HF antenna "Personal Exposure Limit" boundaries, etc.) are properly applied. Final non-skid top-coat must be applied to the same areas that were coated with the non-skid top-coat prior to blasting, layout of non-skid top-coat pattern must be maintained.
01 Deck Non-Skid (See 3.2.2 for def.)	Appendix A Weather Deck Non-Skid, MIL-SPEC Coating for Steel or Aluminum - Option I or Option II Topcoat Color: Haze Gray (36270)	See Paragraph 3.3.2 below. Ensure all safety markings (e.g. HF antenna "Personal Exposure Limit" boundaries, etc.) are properly applied. Final non-skid top-coat must be applied to the same areas that were coated with the non-skid top-coat prior to blasting, layout of non-skid top-coat pattern must be maintained.
All Deck Machinery	Appendix A Machinery, Deck, Option I or Option II Topcoat Color: Spar (10371)	Prepare and coat previously-coated surfaces of all deck machinery (e.g. 3 capstans, boat winch, j-davits, etc.) (NOTE: Working surfaces of winches and capstan drums may require abrasive-blasting to SSPC-SP10/NACE No. 2.)

TABLE 3 - COLORS FOR MISCELLANEOUS DETAILS

COMPONENT	*TOP COAT COLOR
Freeboard – "Tear Drop"	Black (17038)
Awning Ridgepoles	White (17925)
Bitts, towing	Spar (10371) except where line lays and runs; do not paint.
Chocks, brass/bronze	Uncoated
Chocks, bulwark	Match bulwark color
Chocks, except bulwark and roller type	Spar (10371)
Chocks, Roller	Black (17038)
Handrails and Lifeline Stanchions	White (17925)
Knife edges on watertight doors and hatches	Do not paint.
Name Plates	No coating.
Ventilators, all types, including gooseneck pipe vents, not attached or immediately adjacent to the superstructure.	Spar (10371)
Fire fittings, valves, stations, etc.	Red (11105)

***Numbers indicated are FED-STD-595 colors.**

3.2.1 Definition of main deck non-skid surfaces. "Main Deck Non-Skid surfaces" are the union of the following exterior surfaces:

- All existing non-skid coatings on main deck
- All adjacent horizontal surfaces and associated like-colored components (e.g. bitt and chock

foundations, machinery rack guards and machinery foundations, hatches and hatch guards, stanchion sockets, vent pipes, angle coaming area, and approximately six inches up all adjacent vertical surfaces to the bottom of "Superstructure" surfaces.

- All adjacent associated spar colored fittings attached to main deck (e.g. bits, chocks, goosenecks, etc.), but not including the taff rails and stanchions (grouped with "Freeboard" surfaces).

3.2.2 Definition of 01 deck non-skid surfaces. "01 Deck Non-Skid surfaces" are the union of the following exterior surfaces:

- All existing non-skid coatings on the 01 deck
- All adjacent horizontal surfaces and associated like-colored components (e.g. bitt and chock foundations, machinery rack guards and machinery foundations, hatches and hatch guards, stanchion sockets, vent pipes, angle coaming area, and approximately six inches up all adjacent vertical surfaces to the bottom of "Superstructure" surfaces
- All adjacent associated fittings attached to the 01 deck (e.g. bits, chocks, goosenecks, etc.).

3.3 Requirements particular to various surfaces. The Contractor must conform to the following:

3.3.1. Repair of un-intended damages. The Contractor must repair all damages (including overspray) incurred to vessel surfaces (including those not covered by the intended scope of this work item), during surface preparation and paint application procedures.

3.3.2 Weather deck non-skid.

3.3.2.1 Non-skid area specifications and standards. Maintain the existing dimensional layout of the actual non-skid areas. Do not apply non-skid to the following surfaces:

- Within two inches of deck fittings, hatches, welds, and protrusions.
- Within six inches of deck coaming, bulkheads, and deck edges.
- Within six inches of all deck edges and bulkheads.
- Within two inches of deck foundations (two inches measured from outermost portion of foundation, for example, foundation brackets on anchor windlass).
- Over deck fittings.
- Over waterways.

3.3.2.2 Non-skid surface appearance and texture for a roll-on/flight-deck type system. If the roll-on/flight-deck type system is specified in Table 2, the non-skid surface must show a pattern of peaks and ridges. The ridge profile must be continuous and reasonably uniform. Peaks and ridges must be generally in the same direction (fore and aft), approximately ½ to 1 inch apart, and approximately 1/16 to 3/32 inches high. All weld seams must be cross-rolled from a minimum of 3 inches on either side of the weld.

3.3.2.3 Optional roll-on/flight-deck type systems that may be appropriate. If a Change Request has been authorized and released, the Contractor must apply one of the following, as specified in the CR:

- A low temperature cure system, conforming to MIL-PRF-24667, Type VIII, Composition G. Ensure that top color coating is a silicone alkyd enamel product, recommended by the nonskid coating system manufacturer, in lieu of the polyurethane-based coating listed on QPL-24667.

NOTES

1. The low temperature system is only authorized for application at temperatures between 35-45 degrees F.

2. Primer, non-skid, and color coatings must be procured as part of a system kit from the system's manufacturer or supplier.

- Apply a flexible membrane type system that conforms to MIL-PRF-24667, Type III, Composition G system, with the intermediate membrane.

NOTE

The Type III non-skid system with the intermediate membrane should only be used over deck surfaces that undergo a great deal of flexing, or over uneven deck surfaces where flatness is required.

4. NOTES

4.1 Unit's responsibility. Unit crew will install new superstructure DC decals, compartment check-off holders, and name plates, after the completion of work.

4.2 Definition of coaming. Vertical raised sections of deck plating around an opening that provide a frame and/or deflect water, such as around a hatch or gooseneck.

4.3. Although there may be several possible procurement sources for the Coast Guard Emblem decals and vinyl adhesive letters and numbers, one known source is:

Brace Enterprises
10250 SE 138 Terrace
Dunnellon, FL 34431

352-489-4442 / Fax: 352-489-4476
www.braceenterprise.com

WORK ITEM 21: U/W Body, Preserve

1. SCOPE

1.1 Intent. This work item describes the requirements for the Contractor to preserve the U/W body surfaces. Table 1 below designates the level of preparation and coating application that is required for this contract.

TABLE 1 – PRESERVATION SCOPE

"100%" OR "PARTIAL"
100%

NOTE

U/W body surfaces are as defined in 4.1 (Definitions) and exclude areas covered by docking blocks, unless the vessel is fleeted for the express purpose of preserving blocked areas.

NOTE

1. A Engineering Change is occurring on the Depth Sounder system in the near future, as of this writing. The new model of transducer is listed as conditional GFP in paragraph 1.2 below.

2. Pending completion of administrative tasks before the start of this dry docking availability, a Change Request may be released to install the new type of depth sounder transducer. Installation of the new depth sounder will involve modification of the system, required modifications will be detailed in the Change Request. Otherwise remove and reinstall the existing as an interference as described below.

1.2 Government-furnished property.

MTI	ITEM DESCRIPTION	NSN/PN	QTY	ESTIMATED COST ($/UNIT)
Y	**Depth Sounder Transducer	NSN: 5845-01-586-7921, P/N: SS164-20-10-F	1 ea.	$10,000.00
Y	**Speed log transducer	NSN: 6605-99-839-3629	1 ea.	$10,000.00
N	Parts Kit, Gate Valve (Doppler Speed Log)	NSN: 4820-99-374-5925 P/N: 81702-0410-00	1 ea.	$1,000.00
N	Zinc Anodes	NIN: 01-647-6179 P/N: GA-4	4 ea.	$50.00

***Government-loaned property, which must be returned to the vessel upon completion of the availability.**
****New or refurbished equipment that the Government may provide for installation in place of existing equipment.**

*****Government-furnished property, which is to be supplied by either the vessel or the C4IT Service Center.**

2. REFERENCES

COAST GUARD DRAWINGS

Coast Guard Drawing 154 WPC 163-201, Rev C, Sea Chest A&D

Coast Guard Drawing 154 WPC 601-302, Rev D, General Arrangement

Coast Guard Drawing 154B WPC 601-302, Rev -, General Arrangement

Coast Guard Drawing 154 WPC 602-305, Rev D, Visual Identification and Draft Marks Plan

Coast Guard Drawing 154B WPC 602-305, Rev B, Visual Identification and Draft Marks Plan

COAST GUARD PUBLICATIONS

Surface Forces Logistics Center Standard Specification 0000 (SFLC Std Spec 0000), 2022, General Requirements

Surface Forces Logistics Center Standard Specification 6310 (SFLC Std Spec 6310), 2022, Requirements for Preservation of Ship Structures

OTHER REFERENCES

The Society for Protective Coatings (SSPC) Surface Preparation Specification No.1 (SSPC-SP 1), 2015, Solvent Cleaning

3. REQUIREMENTS

3.1 General.

3.1.1 CIR. The Contractor must submit a CIR for the inspections listed in the following paragraph(s):

- 3.2.5 Report.

3.1.2 Tech Rep. The Contractor must refer to SFLC Std Spec 0000, paragraphs 3.2.4.2.1 (Painting contractor certification program requirement) and 3.2.4.2.2 (Coating Tech Rep), for applicable requirements.

3.1.3 Protective measures. The Contractor must furnish and install all protective coverings to seal off and protect all non-affected vessel's components, equipment, and spaces near the work area against contamination during the performance of work. Upon completion of work, the Contractor must remove all installed protective measures, inspect for the presence of contamination, and return all contaminated equipment, components, and spaces to original condition of cleanliness. Examples of specific areas/equipment/components to be protected are:

- All scuppers and overboard discharges.
- Waterline area where U/W body coating system interfaces with freeboard coating system (unless freeboard surfaces are also being preserved).
- Fathometer transducer surfaces.
- Sea valve openings.

- Propeller shaft bearings and seals.
- Rudder bearings.
- Propellers.
- Zinc anodes (unless anodes are being renewed).

3.1.4 Interferences. The Contractor must handle all interferences in accordance with SFLC Std Spec 0000, paragraph 3.3.5 (Interferences).

NOTE

The capastic fairing is not to be removed simply as an interference for 100% near white blasting unless it is found to be failing.

3.1.5 Water used in preparation and washing procedures. The Contractor must ensure that water used in all surface preparation tasks, including pre-surface preparation wash and water jetting, is of sufficient purity and quality that it does not prevent the surface being cleaned from achieving the required degree of surface cleanliness or non-visible contamination criteria.

3.1.5.1 Ensure that surface preparation water does not contain sediments or other impurities that are destructive to the proper functioning of the cleaning equipment.

3.1.5.2 Ensure that all water used in any surface preparation or cleaning procedures is captured, contained, and all spent water disposed of in accordance with all Federal, state and local regulations.

3.1.6 Surface preparation optional methods. The Contractor has the option of using either high/ultrahigh pressure water jetting or abrasive blasting to achieve the required surface preparation, prior to application of the coating system specified in 3.2 (Preservation requirements). The Contractor may add abrasives to the water jet stream, for one or both of the following reasons:

- Achieving greater productivity.
- Achieving the required surface profile.

NOTES

1. Existing coating system on the U/W body surfaces may have a nominal thickness in excess of that which was originally installed, because of "patch-coats" applied during past drydock availabilities.

2. Water jetting without abrasive addition does not provide any additional anchor profile to the surface, beyond what was present after the previous surface preparation.

3.2 Preservation requirements. The Contractor must accomplish the following:

3.2.1 Inspections. Prior to removing the existing coating system, and after performing hull cleaning, inspect and verify all draft marks have permanent markings (weld beads or impressions), showing their location on the hull. In conjunction with "Surface Preparation" and "Solvent Cleaning" perform a visual inspection of the prepared U/W body steel substrate to identify all discrepancies that may negatively affect coating application. Remove and retain each RHIB Notch Skid Pad for reinstallation/reuse after all other work is complete. Inspect each skid pad, stud, and fastener assembly the surrounding exposed structure for damage, excessive wear, excessive corrosion, and any other discrepancy.

3.2.2 Depth sounder and speed log transducers. Remove the transducers as an interference. Pending condition, new transducers may be provided as Government-furnished property for reinstallation, otherwise reinstall existing.

NOTES

The subject flange was installed incorrectly by the shipbuilder on the following hulls: 1102, 1103, 1104, 1105, 1107, 1108, 1110, 1111, 1112, 1114.

If the discrepancy still exists on this hull reorient the flange as described below.

3.2.2.1 Transducer flange mod. Inspect the orientation of the depth sounder transducer flange (i.e. the flange should be oriented so that two of the bolts fall on a line that points directly fwd/aft) . If it is discrepant relative to the description below submit a CFR detailing required modifications (flange may be removed/reinstalled, or bolt holes may be welded up and redrilled, etc. Include desired method for correcting in the CFR). A CR will be released to mod the contract.

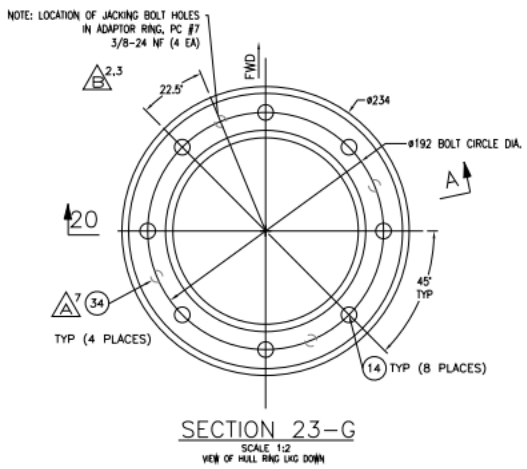

1105 Not Centered

1103 Not Centered

1106 Good

3.2.2.2 Speed Log Gate Valve overhaul. Disassemble and overhaul/clean the gate valve, reinstall. Refer to MPC F14010.D for proper speed probe extraction and insertion. After back in the water, verify valve seals adequately by retracting the probe and shutting the valve. Leakage rate should not prevent swapping of the probe while waterborne.

3.2.3 Report. Submit a CIR detailing all discrepancies identified during inspections. Provide repair recommendations.

3.2.4 Preservation requirements and particulars. The Contractor must prepare and coat the underwater body surfaces as specified in Table 1 above while conforming to the corresponding requirements specified below, and in accordance with all requirements in SFLC STD SPEC 6310. Abide by all the safety, preservation, and quality control requirements specified in SFLC Std Spec 0000, paragraph 3.2.4.2 (In-process QC measures for "critical-coated surfaces). Surfaces being preserved are considered "critical-coated surfaces".

- If "100%" is specified in Table 1 then all U/W body, appendages (e.g. fins, etc.), transducer hull rings/flanges, and RHIB notch wet deck surfaces must be taken down to bare metal in accordance with either SSPC-SP 10/NACE NO. 2 using grit conforming to MIL-A-22262 / (1.5-3.5) or SSPC-SP WJ-2(M)/NACE WJ-2(M)., as specified in SFLC STD SPEC 6310) and all coatings renewed.
- If "Partial" is specified in Table 1, then inspect and identify all damaged coatings (e.g. rust areas, discolored area, bubbling in coatings, etc.). Include in the report above a description of all discrepancies and proposed coatings repairs. After the KO has released a change request perform those coatings repairs in accordance with SFLC STD SPEC 6310. After all authorized coatings repairs have been completed, roughen/abrade all surfaces of the entire underwater body to provide a suitable surface profile and apply one finish coat, not to exceed 6 mils DFT, to the entire underwater body surface.

3.2.4.1 Solvent cleaning of exposed substrate. After completion of surface preparation and prior to coating application, perform a visual inspection of the prepared U/W body steel substrate. Then perform solvent cleaning of all prepared surfaces, in accordance with SSPC-SP 1. Capture, contain, and dispose of all wastes from solvent cleaning, in accordance with all Federal, state and local regulations.

NOTE

Lists of all authorized coating materials and suppliers, and coating colors are listed in SFLC Std Spec 6310, Appendix C (Cutter and Boat Authorized Coatings).

3.2.4.2 Coating system particulars.

- First coat, MIL-PRF-24647 Anticorrosive Epoxy, Grade A or B (Red) at 5-6 mils, DFT.
- Second coat, MIL-PRF-24647 Anticorrosive Epoxy, Grade A or B (Gray) at 5-6 mils, DFT.
- Third coat, MIL-PRF-24647 Non-copper Ablative, Type I, Class 2, Applications 1 & 4 (Red) at 5-6 mils, DFT (while epoxy beneath is still tacky).
- Fourth coat, MIL-PRF-24647 Non-copper Ablative, Type I, Class 2, Applications 1 & 4 (Black) at 5-6 mils, DFT.
- Fifth coat, MIL-PRF-24647 Non-copper Ablative, Type I, Class 2, Applications 1 & 4 (Red) at 5-6 mils, DFT.
- Boot-top area only, apply an additional coat - MIL-PRF-24647 Non-copper Ablative, Type I, Class 2, Applications 1 & 4 (Black) at 5-6 mils, DFT.

3.2.4.3 Draft mark painting. Preserve all draft marks with two coats of a "Polysiloxane" or "Silicone Alkyd Enamel" coating, at 2.0-3.0 mils DFT, white (17925).

3.3 Renew sea chest zinc anodes. Renew all sea chest zinc anodes using Government-furnished property.

3.4 AF system protective measures. If the vessel will not be refloated within the coating system manufacturer's recommended immersion time, the Contractor must take all necessary action to prevent coating damage (e.g. keeping coating system wet, shade the coating system from direct sun light, etc.).

4. NOTES

4.1 Definitions.

4.1.1 U/W Body. The underwater body is defined as the areas from the bottom of the keel to the upper edge of the boot-topping, as shown on Coast Guard Drawing 154 WPC 601-302, including transducer hull rings, sea chests (including the sea chest inlet up to the final connection with the flange face at the sea chest isolation valve(s)), sea chest riser pipes, bilge keels, skegs, gratings, and rope guards. Also included are the underwater body (boot top) area that extends into the RHIB notch wet deck (normally submerged and painted black). Rudders made of NiCuAl (bronze matl similar to the props) must not be painted, all other rudders are part of the U/W Body surfaces.

4.2 Once the vessel has come out of Dry-Dock and the hull has had a new paint system applied or repaired, the ICCP System must be switched to STAND-BY for a period of 4 weeks.

4.2.1 Do not secure the ICCP at the breaker, as this would compromise the operation of the AF system. Ensure the ICCP is energized as shown by the indication light on the right of the control cabinet (see figure below).

4.2.2 Placing the ICCP system in STAND-BY mode allows the AF system to continue functioning as intended. This will prevent impressing any current to the ship's hull (while the paint system cures), while still protecting the auxiliary seawater (ASW) system once waterborne.

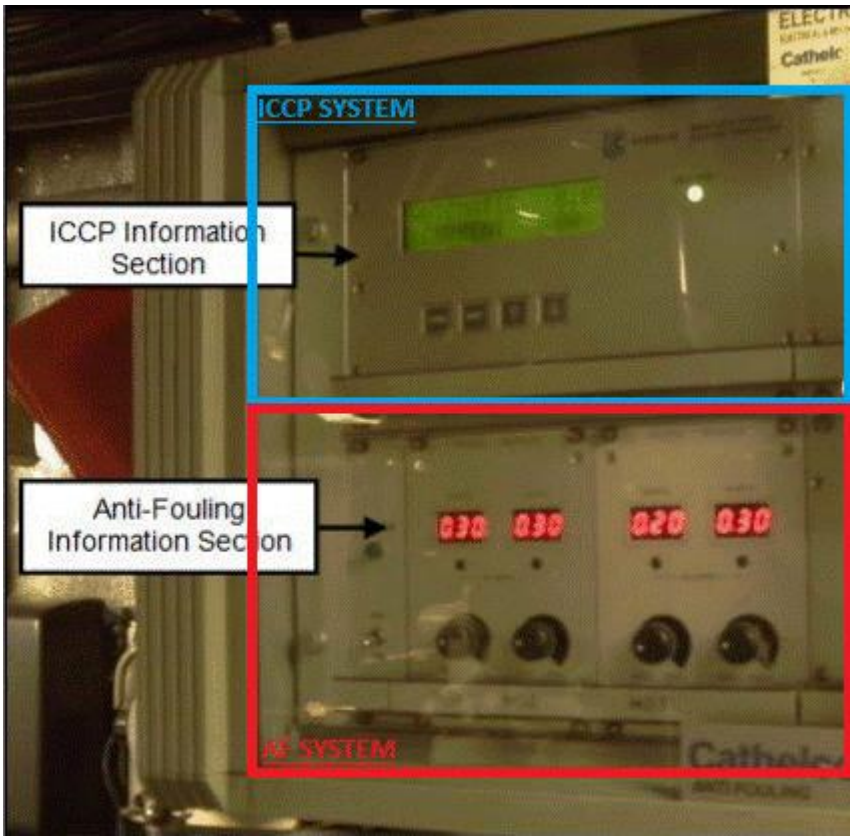
ICCP SYSTEM
ICCP Information Section
Anti-Fouling Information Section
AF SYSTEM

WORK ITEM 22: Impressed Current Cathodic Protection (ICCP) and Anti-Fouling System, Inspect and Maintain

1. SCOPE

1.1 Intent. This work item describes the requirements for the Contractor to inspect and maintain the impressed current cathodic protection (ICCP) system and the associated anti-fouling system.

1.2 Government-furnished property.

MTI	ITEM DESCRIPTION	NSN/PN	QTY	ESTIMATED COST ($/UNIT)
N	**Anode, Corrosion, Elliptical	NSN: 5340-99-400-2561 PN: PPEC1202-MM50	2 ea.	1,900.00
N	**Silver/Silver Chloride Reference Electrode Cell	NSN: 6630-99-553-5405 PN: PPR100019	2 ea.	1,625.00
N	Copper Anode, Anti-Fouling	NSN: 5342-99-133-5325 PN: PAAZRRY037FT	3 ea.	436.69

***Government-loaned property, which must be returned to the vessel upon completion of the availability.**
****New or refurbished equipment that the Government may provide for installation in place of existing equipment.**
*****Government-furnished property, which is to be supplied by either the vessel or the C4IT Service Center.**

2. REFERENCES

COAST GUARD DRAWINGS

Coast Guard Drawing 154 WPC 633-301, Rev C, Cathodic Protection System

COAST GUARD PUBLICATIONS

Coast Guard Technical Publication (TP) 8001B, SWBS 633, Sep 2018, Cathodic Protection System – Model CA44227

Surface Forces Logistics Center Standard Specification 0000 (SFLC Std Spec 0000), 2022, General Requirements

Surface Forces Logistics Center Standard Specification 6310 (SFLC Std Spec 6310), 2022, Requirements for Preservation of Ship Structures

OTHER REFERENCES

None

3. REQUIREMENTS

3.1 General.

3.1.1 CIR. The Contractor must submit a CIR for the inspections listed in the following paragraph(s):

- 3.2.2 Perform inspections, testing, and maintenance.

3.1.2 Tech Rep. None.

3.1.3 Qualifications for performing ICCP/AF system maintenance and repairs. If requested by the KO, submit evidence that one or more on-site technicians has successfully overhauled, renewed, or repaired the installed Cathelco Limited ICCP/AF system, or a similar model of ICCP/AF system manufactured by the same company, and further describe all knowledge, experience, and training contributing to being qualified to maintain, repair, and test the system.

3.1.4 Protective measures. The Contractor must furnish and install all protective measures in accordance with SFLC Std Spec 0000, paragraph 3.3.3 (Vessel component, space, and equipment protection).

3.1.5 Interferences. The Contractor must handle all interferences in accordance with SFLC Std Spec 0000, paragraph 3.3.5 (Interferences).

3.1.6 Inspection and test. The Contractor must perform all inspections and tests in the presence of the COR or Coast Guard Inspector. Submit all findings and data to the Coast Guard Inspector on a Condition Found Report within one day of test completion.

NOTE

Suggested methods for performing the micro-ohmmeter measurements specified herein - use a spool of twisted pair insulated wire with appropriate alligator clips or plugs. Use one lead to monitor the voltage drop from the remote location and the other connects to the current source return. Make the test wiring of sufficient length to reach from the controller (below decks) to the anode under test (hull exterior). The specific gauge of the test wiring is not critical as long as the required test current can be injected, but generally is no thinner than No. 20 AWG and rarely is heavier than No. 16 AWG.

TABLE 1 – HULL ANODES

ID	FRAME	SIDE	COMPARTMENT
4 (13)	34½	Stbd	Engine Room (3-27-0-E)
3 (12)	34½	Port	Engine Room (3-27-0-E)

TABLE 2 – REFERENCE CELLS

ID	FRAME	SIDE	COMPARTMENT
1 (21)	9½	Stbd	Forward Auxiliary Space (3-3-0-E)
2 (20)	9½	Port	Forward Auxiliary Space (3-3-0-E)

TABLE 3 – ANTI-FOULING ANODES

ID	FRAME	SIDE	COMPARTMENT

1	34	Stbd	Engine Room (3-27-0-E)
2	34	Port	Engine Room (3-27-0-E)
3	10	Fwd	Forward Auxiliary Space (3-3-0-E)

3.2 Mandatory/recurring tasks.

3.2.1 While waterborne, and in conjunction with performing the specified in the work item titled "Sea Trial Performance, Support, Provide", the Contractor must witness Coast Guard personnel perform an initial operational test of the ICCP system to identify all operational discrepancies. Then after de-energizing the anodes for 2 to 3 hours, and in accordance with TP 8001 Section 5, verify no opens or shorts in both reference electrodes and anodes using a high impedance multi-meter. Include a description of all discrepancies noted, with recommended repairs, in critical inspection report specified in paragraph 3.2.3 below.

3.2.2 Perform inspections, testing, and maintenance. In dry dock, perform the following using (TP) 8001B and Coast Guard Drawing 154 WPC 633-301 as reference **Submit a CIR**:

- Clean and inspect anodes, reference electrodes, and dielectric shield - Removing all marine growth and salt accumulation from all anode and reference electrodes external surfaces. Visually inspect all surfaces for discrepancies (e.g. pitting, dissolution, voids, corrosion, other damage, etc.). After protecting all anodes and electrodes, and in conjunction with the work item titled "U/W Body, Preserve 100%" sand or lightly sandblast the surrounding dielectric shield to remove all marine growth and loose paint. Visually inspect all dielectric shield surfaces for all discrepancies (e.g. damage, improper fairing shape, etc.).
- Perform various inspections, and conduction and insulation resistance tests – Test and verify proper conduction between the hull and all ICCP system ground terminals. Disconnect cables from all various components (e.g. anodes, reference electrodes, junction boxes, power units, anti-fouling system anodes, etc.) and, using a 500VDC megger, test to verify proper wire insulation resistance between each individual cable conductor and the hull. Inspect all associated components for excessive wear, damage, and corrosion. Inspect all accessible anode and reference electrode gland housings for leaks, condensation, corrosion, and all other discrepancies. Remove connection box or cofferdam covers as needed to gain access.
- Renew Anti-Fouling Anodes – Disconnect all sea chest mounted anti-fouling anodes, thoroughly clean the sleeve cavities, and install the new anodes. Renew O-rings and gland grommets.
- Propeller Shaft Earthing System Maintenance - Clean the contact surface on each propeller shaft and verify that the band clamps are tight. Clean and inspect the rigging, brushes and shunts. Remove the brushes from the brush holders and clean out dirt and other foreign debris. In the inspection report note remaining brush length. Renew any brush worn past 75 % of original length. Inspect brush shunt connections for tightness and corrosion. Apply conductive grease to prevent corrosion and torque all shunt fasteners.
- Rudder Stock and Fin Stabilizer Inspections and Maintenance - Inspect the bonding strap between each rudder stock/fin stabilizer and the ship's structure for corrosion and continuity. Verify straps are at least No. 8 AWG flexible copper cable and are brazed to cable lugs on the rudder stock and fixed ship's structure. Apply conductive grease to all connections to prevent corrosion and torque all fasteners.
- Restore System – Pending correction of all discrepancies, restore all connections. Reseal all anode and reference electrode cables in bilge junction boxes. Tighten all loose packing gland nuts.

3.3 Conditional repair task requirements. If the KO approves a Change Request that specifies growth repairs to correct discrepancies, the Contractor must perform the work specified in the Change Request and conform to the following requirements, as applicable.

NOTE

Surfaces being preserved are considered "critical-coated surfaces". SFLC Std Spec 0000, paragraph 3.2.4.2 (In-process QC measures for "critical-coated surfaces") and SFLC Std Spec 6310 apply.

3.3.1 Requirements for renewal of failed or damaged anodes and reference cells.

- Renew the items specified in the Change Request in accordance with (TP) 8001B and Coast Guard Drawing 154 WPC 633-301. Inspect all hidden underlying surfaces (e.g. hull surface, dielectric shield, etc.) revealed during the renewal process and submit CFR (3cond) detailing all discrepancies and recommended repairs.
- For reference electrodes, verify the rubber back of reference electrodes being renewed seal tightly against the hull; do not use mastic, resin, or filler. Apply anticorrosive compound to all disturbed studs and ring terminals.
- Prepare and preserve all previously coated surfaces exposed by the removal of the anode/electrode in accordance with, and in conjunction with, the "Underwater Body, Preserve (100%)" item, using the same coating system.
- Repeat all conduction and insulation resistance tests specified beneath "3.2 Mandatory/recurring tasks." above for each renewed component. Repair all discrepancies, document testing results in final report.

3.3.2 Requirements for repair or renewal of the dielectric shield.

- Protect anodes from damage and contamination while sandblasting as well as during the application of dielectric shield compound and subsequent coatings. Mask the conductive surfaces of each anode whose dielectric shield is to be repaired. Blast all areas of the shield which have blistered, peeled, broken down, or been exposed to calcareous deposits. Chamfer and undercut the removal area so that outer surface of the remaining shield slightly overhangs the bare surface below, providing a mechanical lock for the new fairing compound.
- Apply the first dielectric shield layer within four hours of surface preparation.
- Ensure that the fairing compound is applied in accordance with the manufacturer's instructions and has a smooth and uniform finish when cured, with no porosity. New material must be applied directly to the clean steel hull and not over any other coating, except at the feathered interface between old and new dielectric shielding.

NOTE

In cool weather the curing may be reduced by 1) warming the compound prior to mixing, 2) heating the cans for one hour in 70-80°F water, 3) storing in a warm area until application time, 4) applying heat to the hull, ensuring that radiant energy and temperature are controlled so that the material does not discolor or burn.

- Prepare and coat the new fairing compound in conjunction with the rest of the underwater body surfaces in accordance with the "Underwater Body, Preserve (100%)" work item. Apply the first layer while the fairing compound is still tacky for best adhesion.
- Do not energize the impressed current cathodic protection system until the dielectric shield

has cured for at least 7 days.

3.4 Final operational tests. After refloating, the Contractor must verify no hull leaks from the ICCP system hull penetrations at anodes and reference cell glands. Clean all cofferdam cover gaskets and mating sealing surfaces; and reinstall covers. After completion of all work, thoroughly test the ICCP system in the presence of the Coast Guard Inspector, demonstrating fully satisfactory operating condition. Submit a CFR confirming proper operation of the ICCP system.

4. NOTES

4.1 Once the vessel has come out of Dry-Dock and the hull has had a new paint system applied or repaired, the ICCP System must be switched to STAND-BY for a period of 4 weeks.

4.1.1 Do not secure the ICCP at the breaker, as this would compromise the operation of the AF system. Ensure the ICCP is energized as shown by the indication light on the right of the control cabinet (see figure below).

4.1.2 Placing the ICCP system in STAND-BY mode allows the AF system to continue functioning as intended. This will prevent impressing any current to the ship's hull (while the paint system cures), while still protecting the auxiliary seawater (ASW) system once waterborne.

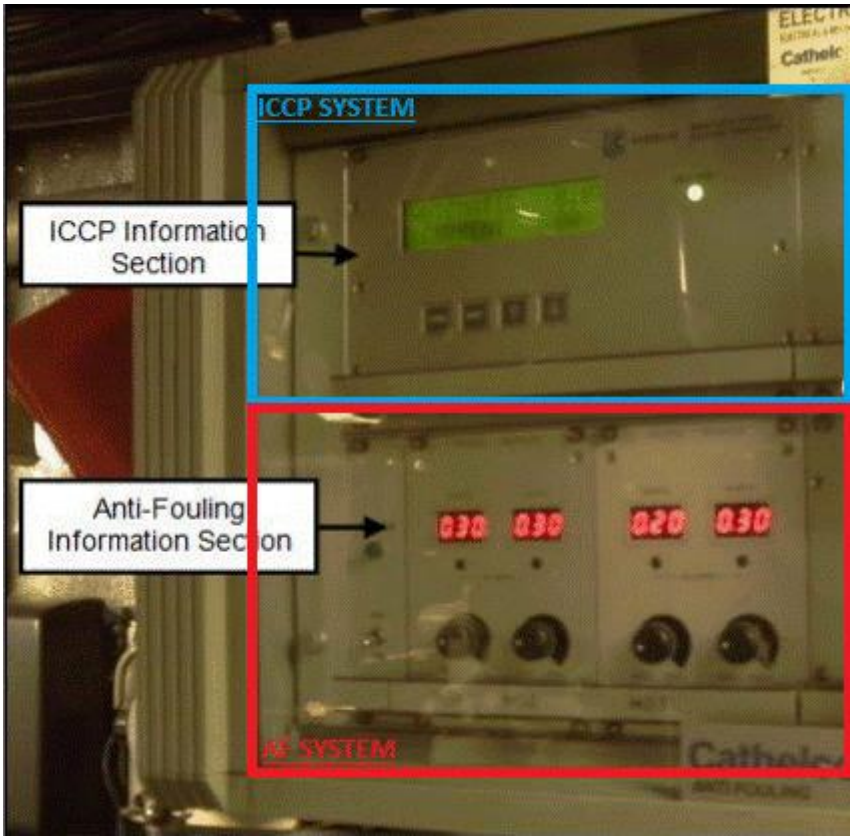

WORK ITEM 23: Interior Deck Coverings, Reseal

1. SCOPE

1.1 Intent. This work item describes the requirements for the Contractor to remove and then reapply the upper components of the deck covering in the compartments described in Table 1, to obtain a uniform and defect-free surface and renew deck covering as identified in Table 2.

TABLE 1 - DECK COVERING LOCATIONS TO BE SEALED

LOCATION NAME, SPACE	APPROX. SURFACE AREA (SQFT)	COVE BASE	REPAIRS, IN ADDITION TO RESEALING, REQUIRED TO COMPLETE THE RESEAL
Ship's Office (1-16-1-A)	35	YES	Top coat scratched, requires sand and reseal
Mess Deck (1-17-0-Q)	105	YES	Top coat faded and scuffed. Edges along inboard storage cabinets peeling. Sand, repairs, and reseal required
Galley (1-18-2-Q)	80	YES	Top coat faded. Coating along drain failed, edges along cabinets failing, requires sanding, repairs, and reseal
Head (1-23-1-L)	20	YES	Dullness and scratches in top coat, bumps on surface, requires sand and reseal
Passage (1-23-2-L)	12	YES	Dullness and scratches in top coat, requires sand and reseal
Shower (2-12-1-L)	15	YES	Approx. 5" x 5" top coat failure, requires sanding, repairs to color coat, and reseal
Head (2-13-2-L)	15	YES	Bumps on surface, requires sanding and reseal
Shower (2-14-1-L)	15	YES	Approx. 12" x 6" top coat failure, requires sanding, repairs to color coat, and reseal
Head (2-14-2-L)	15	YES	Failed top coat through color coat into the underlayment around the deck drain, requires sanding repairs to color coat, and reseal
Head (2-23-1-L)	30	YES	Top coat failing, requires sand and reseal
Passage (2-23-0-L)	50	YES	Dullness and scratches in top coat, bumps on surface, requires sand and reseal
Climate Controlled Store Room (2-23-4-A)	60	YES	Dullness and scratches in top coat, bumps in surface, requires sand and reseal

TABLE 2 - CARPETING RENEWAL

LOCATION	AREA (SQFT)	DECK MTL	COVE BASE	SYSTEM COLOR	UNDERLAYMENT REQUIREMENT
2 Person Stateroom (2-15-2-L)	35	Alum Joiner Deck	YES	See 3.4 Deck covering color	No underlayment required (deck covering to be installed over painted deck surfaces)

4 Person Stateroom (2-17-2-L)	55	Alum Joiner Deck	YES	See 3.4 Deck covering color	No underlayment required (deck covering to be installed over painted deck surfaces)
2 Person Stateroom (2-21-2-L)	35	Alum Joiner Deck	YES	See 3.4 Deck covering color	No underlayment required (deck covering to be installed over painted deck surfaces)
4 Person Stateroom (2-20-1-L)	55	Alum Joiner Deck	YES	See 3.4 Deck covering color	No underlayment required (deck covering to be installed over painted deck surfaces)
ENG CPO Stateroom (2-23-2-L)	48	Alum Joiner Deck	YES	See 3.4 Deck covering color	No underlayment required (deck covering to be installed over painted deck surfaces)

1.2 Government-furnished property.

None.

2. REFERENCES

COAST GUARD DRAWINGS

Coast Guard Drawing 154 WPC 634-301, Rev B, Deck Covering Schedule

COAST GUARD PUBLICATIONS

Surface Forces Logistics Center Standard Specification 0000 (SFLC Std Spec 0000), 2022, General Requirements

Surface Forces Logistics Center Standard Specification 6341 (SFLC Std Spec 6341), 2022, Install Interior Deck Covering Systems

Surface Forces Logistics Center Standard Specification 0740 (SFLC Std Spec 0740), 2022, Welding and Allied Processes

OTHER REFERENCES

Federal Specification (Fed Spec) DDD-C-95, Mar 1972, Carpets and Rugs, Wool, Nylon, Acrylic, Modacrylic

MIL-STD-1623E, April 2010, Fire Performance Requirements and Approved Specifications for Interior Finish Materials and Furnishings (Naval Shipboard Use)

3. REQUIREMENTS

3.1 General.

3.1.1 CIR.

None.

3.1.2 Tech Rep.

Not applicable.

3.1.3 Protective measures. The Contractor shall furnish and install all protective coverings to seal off and protect all non-affected vessel's components, equipment, and spaces near the work area against contamination during the performance of work. Upon completion of work, the Contractor shall remove all installed protective measures, inspect for the presence of contamination, and return all contaminated equipment, components, and spaces to original condition of cleanliness.

3.1.4 Interferences. The Contractor shall handle all interferences in accordance with SFLC Std Spec 0000, paragraph 3.3.5 (Interferences).

3.2 Inspection and Report. The Contractor shall inspect all deck areas being resealed as specified in Table 1 - Deck Covering Locations to be sealed, and all other affected components (e.g. cove base PC 7 of Coast Guard Drawing 154 WPC 634-301, non-skid slip resistant tread stickers PC 6 of Coast Guard Drawing 154 WPC 634-301, etc.). Determine if repairs in addition to those already specified in Table 1 will be required to complete the scope of work specified herein. Submit a CFR detailing findings and recommended additional repairs. Perform those repairs after the KO releases a modification or change request authorizing those growth repairs.

NOTE

It's not possible to know how thick the existing clear coat is in all areas, and it may be difficult to remove damaged or discolored clear coating without damaging the appearance of the flakes beneath. For these reasons the job should be planned as if application of flakes may be required over a significant portion of the specified surface to ensure scheduling problems do not occur during execution.

3.3 Epoxy flake system resealing. The Contractor shall remove coating from, and then recoat, the deck areas specified in Table 1 above. Sand down the existing deck covering areas to remove all discolorations and damage, which may require covering removal into the colored area. Reapply color coat and flakes to obtain uniform color, as required. Reapply sealers. Renew PC 6 of Coast Guard Drawing 154 WPC 634-301 (slip-resistant treads) where disturbed. Maintain the existing net weight of the deck covering system by maintaining the original thickness of the epoxy flake system; generally apply no more material than was removed. Allow sealer to cure for the manufacturer recommended times.

CAUTION

Epoxy flake system is applied over delicate joiner deck on most of the 2nd deck areas. Do not damage joiner deck during removal of top layer of existing deck material.

To minimize impact on cutter weight & moment, do not add excessive deck covering material, beyond what was removed. Make new deck covering thickness as close as practicable to the original, pre-resealed thickness.

3.4 Carpeting Renewal Requirements. The Contractor shall renew the carpeting in the locations specified in Table 2. New carpeting shall be in accordance with PC 2 of Coast Guard Drawing 154WPC 634-301. Perform all tasks specified in SFLC Std Spec 6341 and herein.

3.4.1 Deck covering color. The Contractor shall submit a deck covering color chart to Coast Guard Inspector for the purpose of color selection.

3.4.2 Visual inspection. Prior to installation, the Contractor shall perform a visual inspection of all exposed deck surfaces. Submit a CFR.

3.5 Cove Base. The Contractor shall renew all associated cove base (PC 7 on Coast Guard Drawing 154WPC 634-301) for each compartment listed in Table 1 and Table 2 if the associated Cove Base column is marked "YES". 4 inch wide cove base may be installed in lieu of 2.5 inch wide cove base as specified on the drawing. The Contractor may renew the existing cove base if 4 inch wide is installed.

3.6 Carpet Edging Adjacent to Hatches. In lieu of rubber edging as shown in Figure 1 below, all carpet edges that butt up against hatches shall have a sewn edge similar to the edge that surrounds the carpet attached directly to the hatch cover, as shown in Figure 1 below.

FIGURE 1 – CARPET EDGING

4. NOTES

This section is not applicable to this work item.

WORK ITEM 24: Drydocking

1. SCOPE

1.1 Intent. This work item describes the requirements for the Contractor to drydock the vessel, undock the vessel, and perform various drydocking-related tasks.

1.2 Government-furnished property.

None.

2. REFERENCES

COAST GUARD DRAWINGS

Coast Guard Drawing 154 WPC 079-900, Rev D, Stability and Loading Data Booklet

Coast Guard Drawing 154 WPC 079-902, Rev -, Curves of Form Hydrostatic Analysis

Coast Guard Drawing 154 WPC 997-002, Rev B, Alternate Docking Plan 620 MT Mobile Lift

Coast Guard Drawing 154 WPC 997-004, Rev A, Steel Block Towers for Alternate Docking Plan

Coast Guard Drawing 154 WPC 997-302, Rev -, Docking Plan (Supersedes DWGS 154-WPC-997-1, 997-301)

Coast Guard Drawing 154 WPC 997-303, Rev -, Alternate Docking Plan 500 Ton Mobile Boat Lift

Coast Guard Drawing 154 WPC 997-304, Rev -, Alternate Docking Plan 820 MT Mobile Boat Lift

COAST GUARD PUBLICATIONS

Surface Forces Logistics Center Standard Specification 0000 (SFLC Std Spec 0000), 2022, General Requirements

Surface Forces Logistics Center Standard Specification 8634 (SFLC Std Spec 8634), 2022, Drydocking

Coast Guard Technical Publication (TP) 8010B, SWBS 565, May 2019, Fin Stabilizer System – Model QC-1500 with MPU20 Hydraulic System

OTHER REFERENCES

None

3. REQUIREMENTS

3.1 General.

3.1.1 CIR.

None.

3.1.2 Tech Rep.

None.

3.1.3 Protective measures. The Contractor must furnish and install all protective measures in accordance with SFLC Std Spec 0000, paragraph 3.3.3 (Vessel component, space, and equipment protection).

3.1.4 Interferences. The Contractor must handle all interferences in accordance with SFLC Std Spec 0000, paragraph 3.3.5 (Interferences).

3.2 Docking requirements. The Contractor must drydock and undock the vessel in accordance with SFLC Std Spec 8634, using one of the authorized Coast Guard docking plans under Section 2 (References) above, and Coast Guard Drawings 154 WPC 079-900, 154 WPC 079-902 and TP 8010B as guidance.

WARNING!

Strict adherence to the authorized Coast Guard docking and lifting plans is a vital requirement of this contract. Deviations from the approved Coast Guard docking plans are prohibited and will prevent contract award.

The following from SFLC Standard Spec 8634 paragraph 3.5.1.2 is not applicable: "As applicable, the contractor must also submit an alternate blocking arrangement with the pre-award calculations which consists of any changes from the CG docking plan provided in the work package."

NOTES

1. **The USCG has established two blocking positions that facilitate access to all of the U/W body surfaces of the 154 WPC vessel-class, allowing periodic comprehensive inspection and/or 100% preservation.**
2. **The normal force requirements, per SFLC Std Spec 8634, paragraph 3.5.2.2, 7th bullet, and associated Figure 1, may be waived for block pairs adjacent to the keel (i.e., blocks 1P-1S, 3P-3S, etc.), if constructed such that they form a single block. The block bases, at a minimum, must be as wide as the span between the outboard edges of the soft caps for each keel-adjacent block. All of the layers of the block, including the soft cap, must be secured to prevent slippage when the caps take load. Sketches of each block build intending to have the normal force requirement waived must be submitted to the KO for approval with the docking calculations.**

3. **Temporary block removal may be required to preserve areas that were blocked previously and will again be blocked under this work item (i.e., former blocking position 1 under Coast Guard Drawing 154 WPC 997-302 will have unpreserved block areas under Coast Guard Drawing 154 WPC 997-002 or -004, position 2). A temporary blocking plan(s) must be submitted to remove any block or portion(s) thereof for each occurrence.**
4. **If running gear is to be removed as part of this contract, the Contractor must ensure proper height is established to remove the running gear. Additional support structure may be required in conjunction with the chosen docking plan to attain required height; the Contractor must detail this additional structure in the preaward and docking calculation submittals, accordingly.**

3.2.1 Calculations. The Contractor must execute and deliver all required calculations in accordance with Appendix A of SFLC Std Spec 8634. Fleeting is not required.

3.2.1.1 Preaward calculations. For preaward calculations for this class, SFLC Std Spec 8634, Appendix A, paragraph A2.4.2 permits previously submitted pre-award calculations of the same class as proof of capability for this availability. Therefore, the Contractor may submit the previous calculations to fulfill this requirement, regardless of the earlier docking position.

NOTE

For previously-submitted travel lift preaward calculations, those done using full displacement will be acceptable despite the requirements 3.2.2 and follow-on paragraphs.

3.2.1.2 Docking calculations – aft draft readings. For the docking calculations, the Contractor must be aware that the aft draft readings as observed on the hull account for the lowest point in the running gear (propeller tip) and not the cutter baseline. To determine the baseline draft reading, the KTR must subtract 0.81 feet from the observed aft draft reading.

3.2.2 Requirements specific to this contract and the 154 WPC class. Blocking Position 2 on the docking plan must be used. Fin stabilizers may affect required blocking height. Use the following conditions as applicable to the hauling method for the pre-award calculations to be submitted.

3.2.2.1 Travel Lift

- Displacement – Min Ops (LT): 312.25
- VCG (FT ABL): 10.48
- LCG (FT aft of FR 0): 86.90
- Length Overall (FT): 153.6
- Length Between Perpendiculars (FT): 145.6

3.2.2.2 All others (graving, floating, synchrolift, etc):

- Displacement – Full Load (LT): 343.24
- VCG (FT ABL): 10.14
- LCG (FT aft of FR0): 86.17
- Length Overall (FT): 153.6

- Length Between Perpendiculars (FT): 145.6

NOTES

1. When using a mobile boat lift, the cutter must be lifted in the minimum operating condition (or lighter) and with empty fuel tanks.

2. The forward reference point is 2.10 ft aft of Frame 0.

3.2.3 Pre-docking Sea Trails. See the work item titled "Sea Trial Performance, Support, Provide" for requirements. Provide pricing for those tasks with the corresponding CLIN of the same title.

3.2.4 Liquid load adjustments. See the work item titled "Tanks and Voids, Inspect and Preserve" for requirements. Provide any known pre-award pricing for those types of tasks with the "Tanks and Voids, Inspect and Preserve" CLIN of the same title.

4. NOTES

4.1 Arrival conditions. The COR will advise the Contractor of the actual tank and draft readings when the vessel arrives and will discuss with the Contractor any liquid loading changes necessary.

WORK ITEM 25: Temporary Services, Provide - Cutter

1. SCOPE

1.1 Intent. This work item describes the requirements for the Contractor to provide temporary services to the Cutter, during the performance of this availability.

1.2 Government-furnished property.

None

2. REFERENCES

COAST GUARD DRAWINGS

None

COAST GUARD PUBLICATIONS

Surface Forces Logistics Center Standard Specification 0000 (SFLC Std Spec 0000), 2022, General Requirements

Surface Forces Logistics Center Standard Specification 8635 (SFLC Std Spec 8635), 2022, Temporary Services

OTHER REFERENCES

None

3. REQUIREMENTS

3.1 General.

3.1.1 CIR.

None.

3.1.2 Tech Rep.

None.

3.1.3 Protective measures. The Contractor must furnish and install all protective measures in accordance with SFLC Std Spec 0000, paragraph 3.3.3 (Vessel component, space, and equipment protection).

3.1.4 Interferences. The Contractor must handle all interferences in accordance with SFLC Std Spec 0000, paragraph 3.3.5 (Interferences).

3.2 Temporary service particulars. The Contractor must provide the below listed temporary services, in accordance with SFLC Std Spec 8635.

TABLE 1 - SERVICE SELECTION

*SUB-PARAGRAPH	TITLE	Y/N
3.3.1	Office space	N
3.3.2	Telephone	Y
3.3.3	Parking	Y
3.3.4	Duty section berthing: 1 male, 1 female. Duty section berthing must be provided for the entire duration of the availability.	N
3.3.5	Electrical power (including all requirements in associated sub-paragraphs)	Y
3.3.6	Hull grounding straps (not applicable when cutter is waterborne)	Y
3.3.7	Compressed air (including all requirements in associated sub-paragraphs)	N
3.3.8	Hazardous material/hazardous waste disposal (see Tables 2 and 3 below)	N
3.3.9	Heavy lift equipment	N
3.3.10	Water supply	
3.3.10.1	Potable water: {___ gallons per day, at __ psig.}{ or _____ gallons, bulk}	N
3.3.10.2	Hot-circulating water	N
3.3.10.3	Cooling water	N
3.3.10.4	Firemain system (including all requirements in associated sub-paragraphs)	N
3.3.11	Steam (including all requirements in associated sub-paragraphs)	N
3.3.12	Refuse disposal	Y
3.3.13	Sewage and grey water disposal (including all requirements in associated sub-paragraphs)	N
3.3.14	Storage – General (including all requirements in associated sub-paragraphs):	
3.3.14	Dry stores.	Y
3.3.14	Paint and flammable stores.	Y
3.3.14	Refrigerated stores.	N
3.3.15	Small boat storage (including all requirements in associated sub-paragraphs)	Y

***Each sub-paragraph number relates directly to the identical sub-paragraph number in SFLC Std Spec 8635.**

TABLE 2 - HAZARDOUS WASTE DISPOSAL – LIQUIDS (GALLONS)

PAINT THINNERS	ENGINE COOLANT	BILGE WATER
20	100	100

TABLE 3 - HAZARDOUS WASTE DISPOSAL – SOLIDS

OILY FILTERS	OILY RAGS (LBS)	EMPTY 1-GAL CONTAINER*	EMPTY 5-GAL CONTAINER*	EMPTY 55-GAL CONTAINER*
25	100	10	20	6

***Previously housed hazardous materials.**

3.3 Extended temporary services. If the performance period of the contract is extended by the KO, the Contractor must continue to provide all temporary services as specified herein for the extension period.

3.4 Additional requirements. The Contractor must provide two connex boxes and EKMS storage.

4. NOTES

This section is not applicable to this work item.

WORK ITEM 26: Sea Trial Performance, Support, Provide

1. SCOPE

1.1 Intent. This work item describes the requirements for the Contractor to provide support for the performance of sea trials.

1.2 Government-furnished property.

None.

2. REFERENCES

COAST GUARD DRAWINGS

None

COAST GUARD PUBLICATIONS

Surface Forces Logistics Center Standard Specification 0000 (SFLC Std Spec 0000), 2022, General Requirements

OTHER REFERENCES

None

3. REQUIREMENTS

3.1 General.

3.1.1 CIR. The Contractor must submit a CIR for the inspections listed in the following paragraph(s):

- 3.2.2 Clean and inspect dielectric shield.

3.1.2 Tech Rep.

None.

3.1.3 Protective measures. The Contractor must furnish and install all protective measures in accordance with SFLC Std Spec 0000, paragraph 3.3.3 (Vessel component, space, and equipment protection).

3.1.4 Interferences. The Contractor must handle all interferences in accordance with SFLC Std Spec 0000, paragraph 3.3.5 (Interferences).

3.1.5 Trial applicability. The Contractor must provide support to the vessel crew to perform sea trials for all work items that require conducting operational tests while the vessel is waterborne or underway, prior to the item certification as being complete. The Contractor must be responsible for ensuring all test procedures are prepared, approved, and distributed for the sea trials, and must be responsible for recording test data and submitting CFRs to the COR.

3.1.6 Sea trial agenda. The Contractor must prepare an agenda that details the Contractor's plans for ensuring completion of the required sea trials.

3.1.6.1 Agenda contents. Ensure the agenda:

- Consists of chronological list of administrative events, inspection events and test events. Events must be arranged to permit expeditious conduct with minimum interference between concurrent events. Mutually compatible events may be scheduled simultaneously.
- Identifies installation of any test equipment or component modification that could impact the normal operation of equipment or systems during performance of the trials.
- Identifies any operating instructions or special test procedures that could impact the normal operations of equipment or systems.
- Includes the full name, title, security clearance, home address, home telephone number and name of next of kin of each Contractor-personnel scheduled to ride the ship during performance of the trials.

3.1.6.2 Agenda submission requirements. Submit four legible copies of the sea trial agenda to the COR two days prior to the scheduled trials. Coordinate both the planning and conduct of the post-overhaul ship trials with the ship's force (see 4.1 (Equipment operation)).

3.1.7 Environmental compliance. The Contractor must abide by the below-listed rules, in addition to all other Federal, state, and local rules governing the overboard discharge of garbage and oil in the water.

3.1.7.1 Discharge of garbage.

TABLE 1 – GARBAGE RULES

GARBAGE TYPE	RULE
Plastics, including synthetic ropes, fishing nets, and plastic bags	Prohibited in all areas
Floating dunnage, lining and packing materials	Prohibited less than 25 miles from nearest land
Food waste, paper, rags, glass, metal, bottles, crockery and similar refuse	Prohibited less than 12 miles from nearest land
Comminuted or ground food waste, paper, rags, glass, etc…	Prohibited less than 3 miles from nearest land

3.1.7.2 Discharge of oil. The Contractor must be aware that the Federal Water Pollution Control Act prohibits the discharge of oil or oily waste upon or into any navigable waters of the U.S. The prohibition includes any discharge that causes a film or discoloration of the surface of the water or causes a sludge or emulsion beneath the surface of the water.

CAUTION

Violators are subject to substantial civil and/or criminal sanctions including fines and imprisonment.

3.2 Pre-docking sea trials. The Contractor must:

3.2.1 Coordinate with the COR to schedule the performance of a short pre-docking sea trial (of approx. 2-4 hrs) so that inspections and assessments may be conducted, while underway, to identify all operational discrepancies that may prevent final acceptance of all other work specified herein, or that may not otherwise be identified in a timely manner through the performance of all other inspections and tests specified herein. Preform these pre-docking sea trail inspections and assessments in the presence of the COR while underway on the pre-docking sea trial. Examples of systems to assess/inspect during the pre-docking sea trial include:

- Shafting System and MDEs (e.g. verify no unusual vibrations that may indicate prop damage, verify no shaft seal leaks, etc.)
- Steering Gear & Fin Stabilizers (e.g. verify no hydraulic system leaks, verify no grooming/adjustment discrepancies, verify function of all repeaters, etc.)
- Speed log and depth sounder
- SSDGs
- ASW & Firemain System (e.g. verify no pre-existing leaks, etc.)
- Stern Launch Door (e.g. verify no hydraulic system leaks, verify no grooming/adjustment discrepancies, etc.)

3.2.2 **Submit a CIR** that includes a description of all previously unidentified discrepancies found during the pre-docking sea trial and recommended repairs.

3.3 Post docking sea trials.

3.3.1 Dock trials. The Contractor must conduct dock trials to demonstrate the material readiness of the ship for sea trials. Additionally, all onboard tests conducted after installation and prior to sea trials to prove proper installation and satisfactory operation of equipment must be conducted in accordance with the requirements specified in the work items designated in paragraph 3.1 (Trial applicability). Ensure that the dock trials are begun no later than 12 hours prior to the scheduled sea trials.

3.3.1.1 The Contractor must provide a pier facility (or allow the cutter to move to a Coast Guard pier) in order to support dock trials. Dock trials may not be conducted while the cutter remains floating inside the drydock (not touching the blocks).

3.3.1.2 During dock trials, the Contractor must ensure the Contractor's personnel observe tests under their cognizance and make such adjustments and repairs, as required.

3.3.2 Sea trials. As soon as possible after completion of the dock trials, the Contractor must coordinate performance of the seal trials, based on the operational tests, as required in the applicable work items, for the following purpose:

- Performing tests that could not be performed while the ship was moored.
- Serving as final step in proving the success of the overhaul/repair tasks required in the designated work items, and ensuring that Contractor and COR are both satisfied that the ship is in all respects ready for final acceptance.

3.3.2.1 The Contractor must have representatives on board the cutter to observe the trials for the purpose of observing whether or not the repairs are satisfactory.

3.3.2.2 The Contractor must ensure the sea trials are be carried out in free route, away from other shipping, as designated by the COR.

3.4 Post-trial examination. After the completion of the sea trial, the Contractor must perform a careful and thorough examination of parts of the repaired machinery, as designated by the COR. If any part of the ship or its equipment fails to meet contractual requirements during trials, perform additional trials after corrective measures have been taken. Submit a final CFR confirming satisfactory completion of all tests and inspections specified for the post docking sea trial.

NOTES

1. Examples of dock trials include conducting cold (pre-light off) and hot checks, cycling machinery (rudders, BPU, turning gear, fin stabilizers), and conducting any post-docking shaft alignment verification checks. This time may also be used to on-load fuel, if needed for operations.

2. The conditions of the trials will be determined largely by the character of the work that has been performed in each case, and as designated by the COR. A full power trial should be run at this time unless the COR elects to defer this run until all new machinery parts are run-in or the training status of the crew permits full power operation without undue hazard.

3. This examination may be conducted by the Engineer Officer of the ship, in which case he will report the results of the examination to the COR, fully describing any defects or improper conditions found.

4. Representatives of manufacturers who have furnished ship components may be invited to witness trials subject to approval of the CO or OINC of the ship.

4. NOTES

This section is not applicable to this work item.