Solicitation No. 140FGA26Q0050
Vehicle Bay Insulation Project
Amendment 1, Q&A

1. The quotation deadline is listed as August 13, 2026, at 10:00 AM. Please confirm the applicable time zone.

   Answer: Pacific Time Zone

2. SF 1442 indicates that performance and payment bonds are required within 14 calendar days after award. FAR 52.228-13 states that the contractor must provide either a payment bond or an irrevocable letter of credit equal to 100 percent of the contract price. Please confirm:

   - Whether both performance and payment bonds are required

     Answer: A payment bond is required for construction contracts exceeding $35,000.00 and a performance bond is required for construction contracts exceeding $150,000.00.

   - Whether only the alternative payment protection under FAR 52.228-13 is required

     Answer: Per the solicitation, the awarded Contractor shall submit one of the following payment protections: Payment bond <u>OR</u> Irrevocable letter of credit (ILC)

   - The required percentage for each applicable bond or payment protection

     Answer: 100 percent, with surety of sureties acceptable to the Government.

3. Please provide any available drawings, current photographs, floor plans, elevations, or measured net wall and roof areas for the building.

   Answer: Refer to following pages 4-10 for what we have available.

4. Please identify which portions of the building are already insulated and clarify whether any existing insulation must be removed, repaired, or tied into the new insulation system.

   Answer: The south 102' of the building is already insulated and enclosed. The wall on the south end of the uninsulated is drywalled. On the east and west sides of this wall are insulation batts that carry into the uninsulated area approximately 3 feet and presumably the full 16' eave height that will have to be removed back to the drywall or tied into the new insulation. See pictures 4 and 5 below.

5. Please confirm the applicable building code and the required standard for the white thermal or ignition intumescent barrier. Please also confirm whether a specific fire rating, tested assembly, product certification, or coating thickness is required.

   Answer: Building code IRC R316.4, Construction type V-B Occupancy classification S-2

6. Please provide the manufacturer, model, panel thickness, track configuration, window layout, and existing spring specifications for the nine overhead doors, if available.

   Answer: Subject to contractor verification the overhead doors are believed to be Amarr 2402, 24ga exterior steel thickness, 2" door thickness, deep ribbed, 24" x 6" framed plexiglas windows, standard cycle springs.

7. Please clarify whether removal and reinstallation of electrical components must be performed by a licensed electrician. Please also identify any required Oklahoma licenses, permits, or inspections.

   Answer: Removal and reinstallation of electrical components must be performed by a licensed electrician.

8. The solicitation lists a period of performance from September 14, 2026, through December 28, 2026, while also requiring completion within 90 calendar days after the Notice to Proceed. Please confirm which requirement controls if the Notice to Proceed is issued on a different date.

   Answer: Completion within 90 calendar days after the Notice to Proceed.

9. The Statement of Work requires spray insulation warrantied by the manufacturer to last the life of the building. Please clarify whether this requirement applies only to the foam product or to the complete installed system, including the intumescent coating and workmanship.

   Answer: This Applies to the foam product.

10. Please confirm whether progress payments will be permitted and provide the anticipated invoice review and payment schedule.

    Answer: Yes, progress payments will be allowed. Payments will be made in accordance with General Conditions of the contract (FAR 52.232-5). Progress payments will be made as the work progresses. Invoice for work accomplished must be submitted through www.ipp.gov. Before an invoice can be uploaded into IPP a draft invoice must be submitted to the CO and COR for approval. Once approval of the invoice is granted the invoice can then be uploaded into IPP for payment.

11. Please confirm whether attendance at the pre-proposal site visit is optional or required for a quotation to be considered responsive.

    Answer: Attendance at the pre-proposal site visit is optional, however highly encouraged. As outlined in the solicitation, failure to attend the pre-proposal site visit or to otherwise conduct an adequate site investigation prior to submitting a proposal shall not constitute grounds for an equitable adjustment, claim, or protest.

The Government assumes no responsibility for any conclusions or interpretations made by the quoter based on incomplete or inadequate site investigation. Quoters are responsible for preparing proposals that accurately account for the actual site conditions. Any underestimation or overestimation of quantities, conditions, or required work, resulting from failure to attend the pre-proposal site visit or failure to adequately investigate the site prior to proposal submission is solely at the quoter's risk. The Government reserves the right to determine that a proposal is unrealistic, unreasonable, or reflects a lack of understanding of the requirement, including proposals materially over- or under-estimated due to failure to attend the site visit, and may reject such proposals as non-responsive.

12. Please clarify whether the Government has a preferred or minimum required method for insulating the overhead doors, including acceptable pre cut panel materials, attachment methods, and required R-value documentation.

    Answer: Preferred method of insulating the overhead doors is a precut polystyrene panel with vinyl backer.

13. SOW - specification of an R-30 insulation value for the roof is overzealous and an unneeded expense. A 3" foam application meeting R-21 insulation value is most appropriate. Confirm if the SOW will be revised to change?

    Answer: Yes, the FWS agrees. The SOW specification has been updated. See revised SOW attached. Now it is an R-15 target value for the roof.

14. Are there any pictures available for the site? If so, can you please provide.

    Answer: Refer to following pages 4-8.

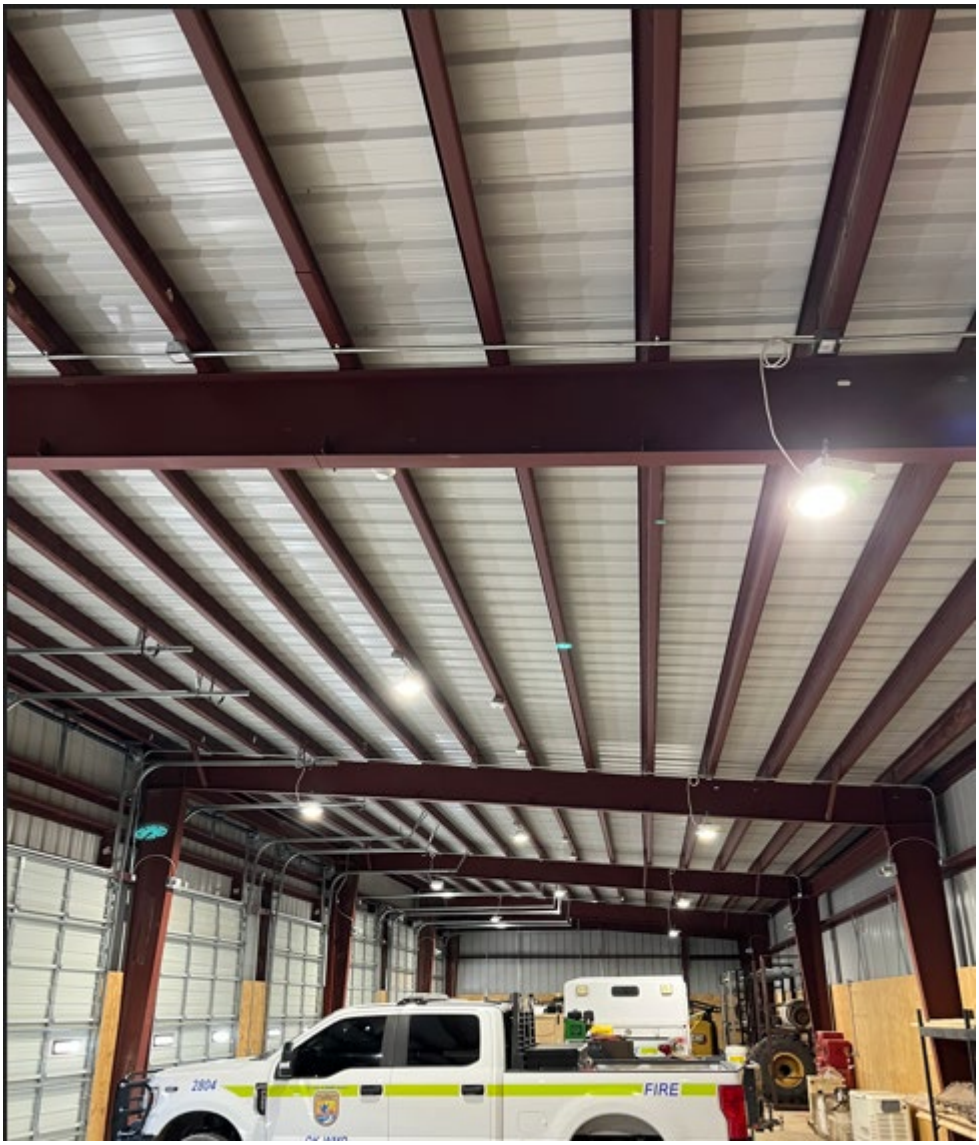
2804
FIRE

EXIT

FIRE

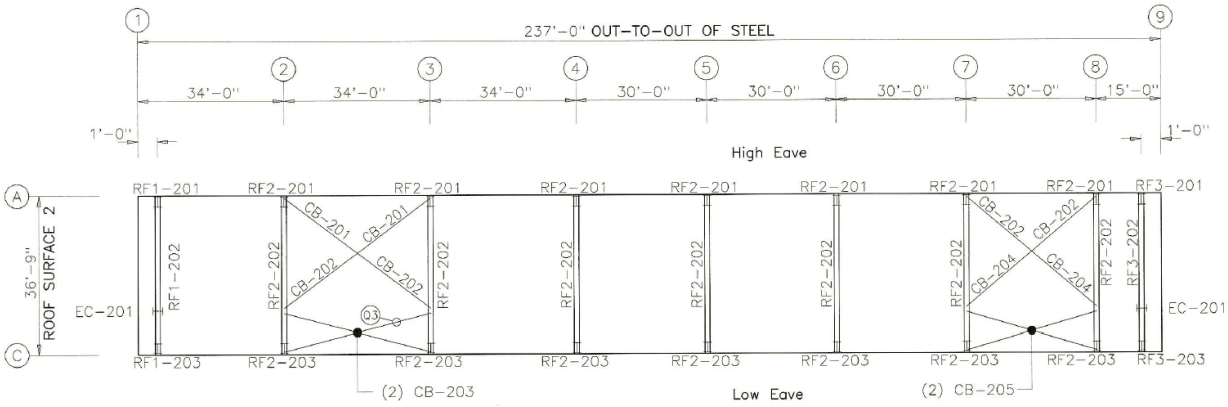

ROOF FRAMING/BRACING PLAN

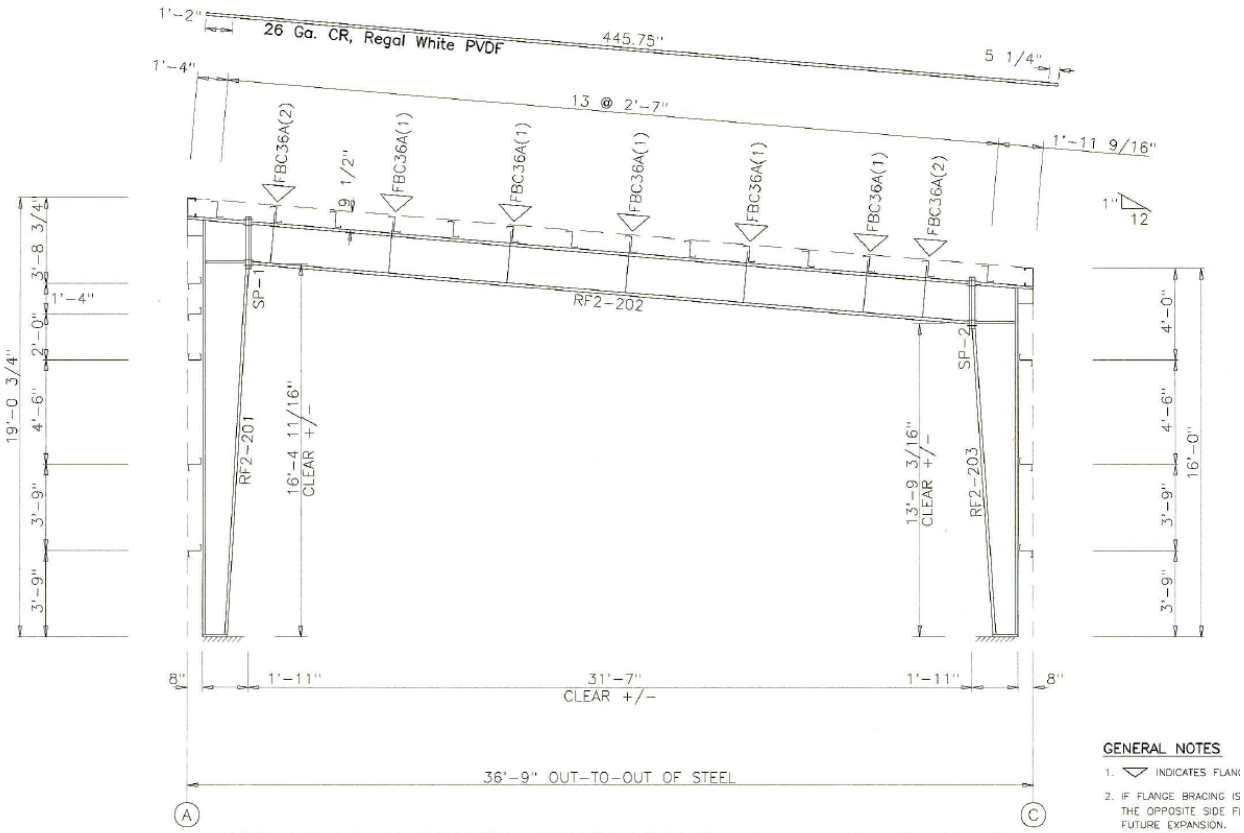

RIGID FRAME ELEVATION: FRAME LINE 2 3 4 5 6 7 8

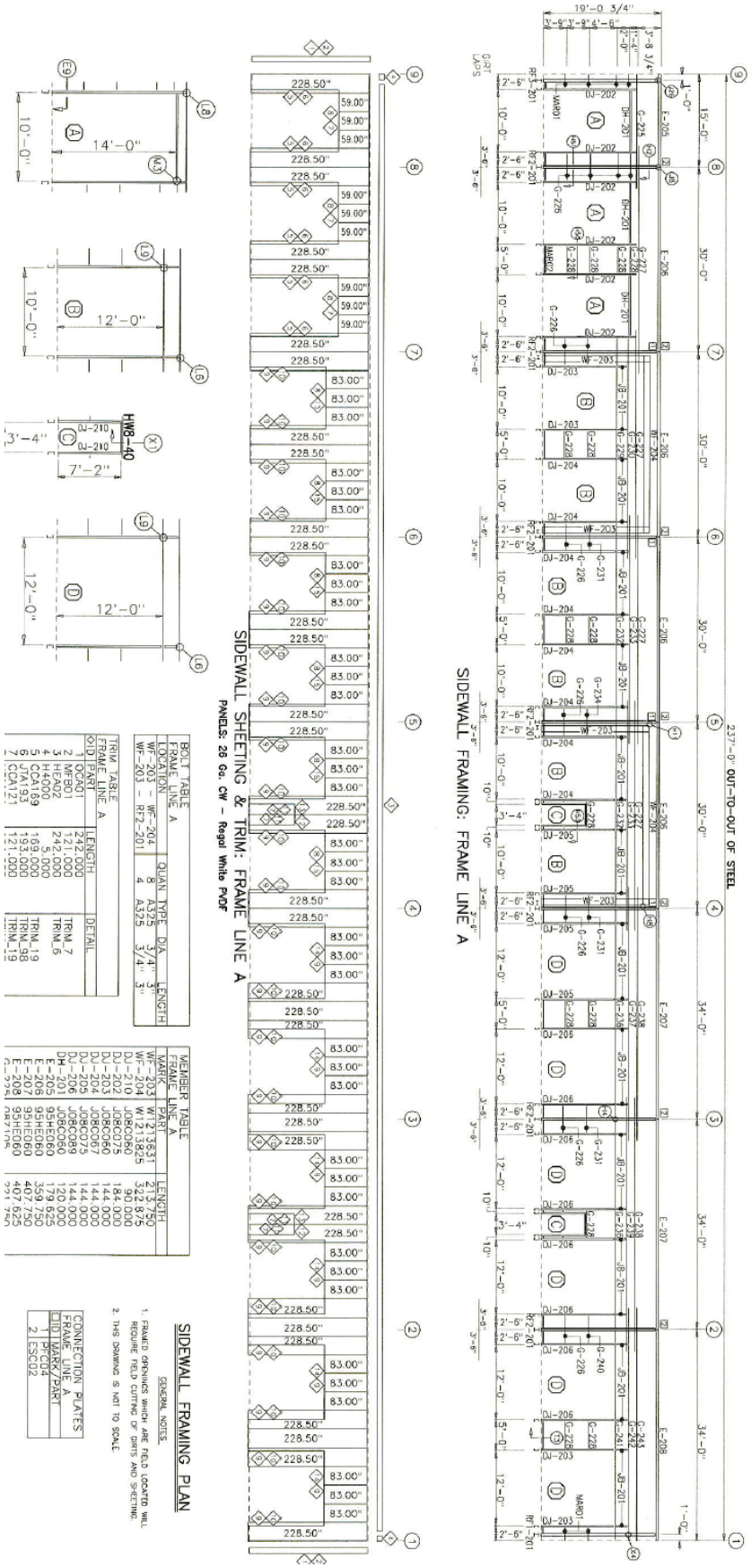
SIDEWALL FRAMING PLAN
GENERAL NOTES
1. FRAMED OPENINGS WHICH ARE FIELD LOCATED WILL REQUIRE FIELD CUTTING OF GIRTS AND SHEETING.
2. THIS DRAWING IS NOT TO SCALE
CONNECTION PLATES
FRAME LINE A
SIDEWALL FRAMING: FRAME LINE A
SIDEWALL SHEETING & TRIM: FRAME LINE A
PANELS: 26 Ga. CW - Regal White PVDF
237'-0" OUT-TO-OUT OF STEEL