Naval Facilities Engineering Systems Command
NAVFAC MID-ATLANTIC

eProjects No: 1806349

SPECIFICATIONS

SP-364 Replace Underground Cabling in SP Area

at the

Naval Station, Norfolk, Virginia

DESIGNED BY:
NAVFAC MID-ATLANTIC
Resident Officer in Charge of Construction (ROICC)
Norfolk, Virginia

PREPARED BY:

Design Manager:	Dave Burnette
Civil:	Charles Vidrine
Structural:	Bimal Shrestha, P.E.
Electrical / Telecom	Dave Burnette

Date: Click or tap to enter a date.

APPROVED BY:
Planning Design Construction Branch Head: John C. Miller, P.E.
Design Director: James M. Smith, R.A.

For Commander, NAVFAC MID-ATLANTIC:

Date: 7-2-26

THIS PAGE INTENTIONALLY LEFT BLANK

PROJECT TABLE OF CONTENTS

DIVISION 00 - PROCUREMENT AND CONTRACTING REQUIREMENTS

00 01 15	02/24	LIST OF DRAWINGS

DIVISION 01 - GENERAL REQUIREMENTS

01 11 00	02/24, CHG 1: 05/25	SUMMARY OF WORK
01 14 00	11/22, CHG 5: 05/25	WORK RESTRICTIONS
01 20 00	11/20, CHG 5: 02/25	PRICE AND PAYMENT PROCEDURES
01 30 00	11/20, CHG 5: 02/25	ADMINISTRATIVE REQUIREMENTS
01 31 23.13 20	08/23, CHG 1: 02/24	ELECTRONIC CONSTRUCTION AND FACILITY SUPPORT CONTRACT MANAGEMENT SYSTEM (eCMS)
01 32 17.00 20	05/25	COST-LOADED NETWORK ANALYSIS SCHEDULES (NAS)
01 33 00	08/18, CHG 4: 02/21	SUBMITTAL PROCEDURES
01 35 26	05/24, CHG 1: 05/25	GOVERNMENTAL SAFETY REQUIREMENTS
01 42 00	05/24	SOURCES FOR REFERENCE PUBLICATIONS
01 45 00	08/23, CHG 3: 08/25	QUALITY CONTROL
01 50 00	11/20, CHG 3: 08/24	TEMPORARY CONSTRUCTION FACILITIES AND CONTROLS
01 57 19	08/22, CHG 2: 08/25	TEMPORARY ENVIRONMENTAL CONTROLS
01 58 00	08/19, CHG 5: 08/22	PROJECT IDENTIFICATION
01 74 19	02/19, CHG 3: 11/21	CONSTRUCTION WASTE MANAGEMENT AND DISPOSAL
01 78 00	05/19, CHG 1: 08/21	CLOSEOUT SUBMITTALS

DIVISION 02 - EXISTING CONDITIONS

02 41 00	08/22	DEMOLITION

DIVISION 03 - CONCRETE

03 30 00	02/19, CHG 8: 05/24	CAST-IN-PLACE CONCRETE

DIVISION 26 - ELECTRICAL

26 05 13	08/25	MEDIUM-VOLTAGE CABLES
26 08 00	11/22	APPARATUS INSPECTION AND TESTING

DIVISION 31 - EARTHWORK

31 00 00	08/23	EARTHWORK

DIVISION 32 - EXTERIOR IMPROVEMENTS

32 16 19	05/18	CONCRETE CURBS, GUTTERS AND SIDEWALKS
32 92 23	04/06, CHG 1: 08/21	SODDING

DIVISION 33 - UTILITIES

33 71 02	02/26	UNDERGROUND ELECTRICAL DISTRIBUTION

-- End of Project Table of Contents --

THIS PAGE INTENTIONALLY LEFT BLANK

DOCUMENT 00 01 15

LIST OF DRAWINGS
02/24

PART 1 GENERAL

1.1 SUMMARY

This section lists the drawings for the project pursuant to contract clause "DFARS 252.236-7001, Contract Drawings and Specifications."

1.2 CONTRACT DRAWINGS

List of Contract drawings is contained on NAVFAC Sheet #12,944,648 which is the second sheet of the contract drawings.

1.3 SUPPLEMENTARY DRAWINGS

These supplementary drawings may not be a part of the contract but are included with the drawings for information.

1.3.1 Boring Logs

The Government does not guarantee that borings indicate actual conditions, except for the exact locations and the time that they were made. Subsurface data, not specified or indicated, have been obtained by the Government at this station. The data are available for examination by prospective bidders in the office of the Contracting Officer.

-- End of Document --

THIS PAGE INTENTIONALLY LEFT BLANK

SECTION 01 11 00

SUMMARY OF WORK
02/24, CHG 1: 05/25

PART 1 GENERAL

1.1 SUBMITTALS

Government approval is required for submittals with a "G" classification. Submittals not having a "G" classification are for Contractor Quality Control approval. Submit the following in accordance with Section 01 33 00 SUBMITTAL PROCEDURES:

SD-01 Preconstruction Submittals

Salvage Plan; G

1.2 WORK COVERED BY CONTRACT DOCUMENTS

1.2.1 Project Description

The work includes the replacement of underground electrical cable between SW 111 at SP-35 to manholes supplying buildings SP-254, 257, 362, 364, and 366 and include installation of above ground junction boxes in the vicinity of SP-254 and 257 and incidental related work.

1.2.2 Location

The work is located at the Naval Station Norfolk, approximately as indicated. The exact location will be shown by the Contracting Officer.

1.3 OCCUPANCY OF PREMISES

Building(s) will be occupied during performance of work under this Contract.

Before work is started, arrange with the Contracting Officer a sequence of procedure, means of access, space for storage of materials and equipment, and use of approaches, corridors, and stairways.

1.4 EXISTING WORK

Remove or alter existing work in such a manner as to prevent injury or damage to any portions of the existing work which remain.

Repair or replace portions of existing work which have been altered during construction operations to match existing or adjoining work, as approved by the Contracting Officer. At the completion of operations, existing work must be in a condition equal to or better than that which existed before new work started.

1.5 LOCATION OF UNDERGROUND UTILITIES

Obtain digging permits prior to start of excavation, and comply with Installation requirements for locating and marking underground utilities. Contact local utility locating service a minimum of 48 hours prior to excavating, to mark utilities, and within sufficient time required if work

occurs on a Monday or after a Holiday. Verify existing utility locations indicated on Contract drawings, within area of work.

Identify and mark all other utilities not managed and located by the local utility companies. Scan the construction site with dual frequency Ground Penetrating Radar (GPR), electromagnetic, or sonic equipment, and mark the surface of the ground or paved surface where existing underground utilities are discovered. Verify the elevations of existing piping, utilities,and any type of underground obstruction not indicated, or specified to be removed, that is indicated or discovered during scanning, in locations to be traversed by piping, ducts, and other work to be conducted or installed. Verify elevations before installing new work closer than nearest manhole or other structure at which an adjustment in grade can be made.

1.5.1 Notification Prior to Excavation

Notify the Contracting Officer at least 15 days prior to starting excavation work.

1.6 SALVAGE MATERIAL AND EQUIPMENT

Items designated by the Contracting Officer to be salvaged remain the property of the Government. Segregate, itemize, deliver and off-load the salvaged property at the Government designated storage area located within 25 miles of the construction site.

Provide a salvage plan, listing material and equipment to be salvaged, and their storage location. Maintain property control records for material or equipment designated as salvage. Provide a system for property control in the salvage plan. Store and protect salvaged materials and equipment until disposition by the Contracting Officer.

PART 2 PRODUCTS

Not used.

PART 3 EXECUTION

Not used.

-- End of Section --

SECTION 01 14 00

WORK RESTRICTIONS
11/22, CHG 5: 05/25

PART 1 GENERAL

1.1 REFERENCES

The publications listed below form a part of this specification to the extent referenced. The publications are referred to within the text by the basic designation only.

U.S. ARMY CORPS OF ENGINEERS (USACE)

EM 385-1-1	(2024) Safety -- Safety and Occupational Health (SOH) Requirements

1.2 SUBMITTALS

Government approval is required for submittals with a "G" classification. Submittals not having a "G" classification are for Contractor Quality Control approval. Submit the following in accordance with Section 01 33 00 SUBMITTAL PROCEDURES:

SD-01 Preconstruction Submittals

List of Contact Personnel

SD-07 Certificates

1.3 SPECIAL SCHEDULING REQUIREMENTS

a. The new junction boxes and feeders must be ready for operation as approved by Contracting Officer before work is started on the demolishing of the existing cabling which would interfere with normal operation.

b. Have materials, equipment, and personnel required to perform the work at the site prior to the commencement of the work. Specific items of work to which this requirement applies include:

Installation of the junction boxes and feeders.

c. The existing buildings will remain in operation during the entire construction period. Conduct operations so as to cause the least possible interference with normal operations of the activity.

d. Permission to interrupt any Activity roads or utility service must be requested in writing a minimum of 15 calendar days prior to the desired date of interruption.

e. The work under this contract requires special attention to the scheduling and conduct of the work in connection with existing operations. Identify on the construction schedule each factor which constitutes a potential interruption to operations.

(1) The following conditions apply:

Power outages for instalation of new junction boxes and feeders.

1.4 CONTRACTOR ACCESS AND USE OF PREMISES

1.4.1 Activity Regulations

Ensure that Contractor personnel employed on the Activity become familiar with and obey Activity regulations including safety, fire, traffic and security regulations. Keep within the limits of the work and avenues of ingress and egress. Wear appropriate personal protective equipment (PPE) in designated areas. Do not enter any restricted areas unless required to do so and until cleared for such entry. Ensure all Contractor equipment, including delivery vehicles, are clearly identified with their company name.

1.4.1.1 Subcontractors and Personnel Contacts

Provide a list of contact personnel of the Contractor and subcontractors including addresses and telephone numbers for use in the event of an emergency. As changes occur and additional information becomes available, correct and change the information contained in previous lists.

1.4.1.2 Additional Personnel Requirements

1.4.1.2.1 General Construction and Finish Work

General construction and finish work of the controlled area must be performed by U.S. firms using U.S. citizens or U.S. persons. General construction includes construction activities such as utilities and foundations.

1.4.1.3 Installation Access

Obtain access to Navy installations through participation in the Defense Biometrics Identification System (DBIDS). Requirements for Contractor employee registration, and transition for employees currently under Navy Commercial Access Control System (NCACS), are available at https://www.cnic.navy.mil/Operations-and-Management/Base-Support/DBIDS/. No fees are associated with obtaining a DBIDS credential.

Participation in the DBIDS is not mandatory, and Contractor personnel may apply for One-Day Passes at the Base Visitor Control Office to access an installation.

1.4.1.3.1 Registration for DBIDS

Registration for DBIDS is available at https://www.cnic.navy.mil/Operations-and-Management/Base-Support/DBIDS/. Procedure includes:

a. Present a letter or official award document (i.e. DD Form 1155 or SF 1442) from the Contracting Officer, that provides the purpose for access, to the base Visitor Control Center representative.

b. Present valid identification, such as a passport or Real ID Act-compliant state driver's license.

c. Provide completed SECNAV FORM 5512/1 to the base Visitor Control Center representative to obtain a background check. This form is available for download at https://www.cnic.navy.mil/Operations-and-Management/Base-Support/DBIDS/.

d. Upon successful completion of the background check, the Government will complete the DBIDS enrollment process, which includes Contractor employee photo, fingerprints, base restriction and several other assessments.

e. Upon successful completion of the enrollment process, the Contractor employee will be issued a DBIDS credential, and will be allowed to proceed to worksite.

1.4.1.3.2 DBIDS Eligibility Requirements

Throughout the length of the contract, the Contractor employee must continue to meet background screen standards. Periodic background screenings are conducted to verify continued DBIDS participation and installation access privileges. DBIDS access privileges will be immediately suspended or revoked if at any time a Contractor employee becomes ineligible.

An adjudication process may be initiated when a background screen failure results in disqualification from participation in the DBIDS, and Contractor employee does not agree with the reason for disqualification. The Government is the final authority.

1.4.1.3.3 DBIDS Notification Requirements

a. Immediately report instances of lost or stolen badges to the Contracting Officer.

b. Immediately collect DBIDS credentials and notify the Contracting Officer in writing under the following circumstances:

(1) An employee has departed the company without having properly returned or surrendered their DBIDS credentials.

(2) There is a reasonable basis to conclude that an employee, or former employee, might pose a risk, compromise, or threat to the safety or security of the Installation or anyone therein.

1.4.1.3.4 One-Day Passes

Personnel applying for One-Day passes at the Base Visitor Control Office are subject to daily mandatory vehicle inspection, and will have limited access to the installation. The Government is not responsible for any cost or lost time associated with obtaining daily passes or added vehicle inspections incurred by non-participants in the DBIDS.

1.4.1.4 No Smoking Policy

Smoking is prohibited within and outside of all buildings on installation, except in designated smoking areas. This applies to existing buildings, buildings under construction and buildings under renovation. Discarding tobacco materials other than into designated tobacco receptacles is considered littering and is subject to fines. The Contracting Officer will identify designated smoking areas.

1.4.2 Working Hours

Regular working hours will consist of an 8 1/2 hour period, between 7 a.m. and 3:30 p.m., Monday through Friday and 7 a.m. to 3:30 p.m. on Saturday, excluding Government holidays.

1.4.3 Work Outside Regular Hours

Work outside regular working hours requires Contracting Officer approval. Make application 15 calendar days prior to such work to allow arrangements to be made by the Government for inspecting the work in progress, giving the specific dates, hours, location, type of work to be performed, contract number and project title. Based on the justification provided, the Contracting Officer may approve work outside regular hours. During periods of darkness, the different parts of the work must be lighted in accordance with requirements of EM 385-1-1. Make utility cutovers after normal working hours or on Saturdays, Sundays, and Government holidays unless directed otherwise.

1.4.4 Occupied Buildings

Work will be around existing buildings which are occupied. Do not enter the buildings without prior approval of the Contracting Officer.

1.4.5 Utility Cutovers and Interruptions

a. Make utility cutovers and interruptions after normal working hours or on Saturdays, Sundays, and Government holidays. Conform to procedures required in paragraph WORK OUTSIDE REGULAR HOURS.

b. Ensure that new utility lines are complete, except for the connection, before interrupting existing service.

c. Interruption to water, sanitary sewer, storm sewer, telephone service, electric service, air conditioning, heating, fire alarm, compressed air, and are considered utility cutovers pursuant to the paragraph WORK OUTSIDE REGULAR HOURS.

d. Operation of Station Utilities: Do not operate nor disturb the setting of control devices in the station utilities system, including water, sewer, electrical, and steam services. The Government will operate the control devices as required for normal conduct of the work. Notify the Contracting Officer giving reasonable advance notice when such operation is required.

1.5 SECURITY REQUIREMENTS

1.5.1 Naval Station Norfolk, Norfolk, VA

a. Contractor registration. Register with the Base Police Truck Investigation Team, located behind pass and ID Office (Bldg CD-9) on Hampton Boulevard, Naval Station Norfolk, Norfolk, VA 23511-5000, telephone number 757-322-2979.

b. Storage and office trailer registration. Register storage and office trailers to be used on base with the truck investigation team. Trailers must meet State law requirements and must be in good condition.

(1) Trailers must be lockable and must be locked when not in use.

(2) Trailers must have a sign in the lower left hand corner of left door of trailer with the following information: Company name, address, registration number of trailer or vehicle identification number, location on base, duration of contract or stay on base, contract number, local on-base phone number, off-base phone number of main office, and emergency recall person and phone number.

c. Equipment markings. Equipment owned or rented by the company must have the company name painted or stenciled on the equipment in a conspicuous location. Rented equipment is to be conspicuously marked with a tag showing who rented the equipment. Register the equipment with the truck investigation team.

d. Procedure information. For additional information regarding registration procedures, contact the Officer in Charge of Construction at 757-445-1463 or Base Police at 757-444-8856.

PART 2 PRODUCTS

Not used.

PART 3 EXECUTION

Not used.

-- End of Section --

THIS PAGE INTENTIONALLY LEFT BLANK

SECTION 01 20 00

PRICE AND PAYMENT PROCEDURES
11/20, CHG 5: 02/25

PART 1 GENERAL

1.1 REFERENCES

The publications listed below form a part of this specification to the extent referenced. The publications are referred to within the text by the basic designation only.

U.S. ARMY CORPS OF ENGINEERS (USACE)

EP 1110-1-8	(2021) Engineering and Design -- Construction Equipment Ownership and Operating Expense Schedule

1.2 SUBMITTALS

Government approval is required for submittals with a "G" classification. Submittals not having a "G" classification are for Contractor Quality Control approval. Submit the following in accordance with Section 01 33 00 SUBMITTAL PROCEDURES:

SD-01 Preconstruction Submittals

Schedule of Prices1.3 SCHEDULE OF PRICES

1.3.1 Data Required

This Contract requires the use of a cost-loaded Network Analysis Schedule (NAS). Schedule of Prices must not be used with cost-loaded Network Analysis Schedule (NAS). Within 15 calendar days of notice of award, prepare and deliver to the Contracting Officer a Schedule of Prices (construction Contract) as directed by the Contracting Officer. Schedule of Prices must have cost summarized and totals provided for each construction category. Provide a detailed breakdown of the Contract price, giving quantities for each of the various kinds of work, unit prices, and extended prices. Indirect activities (e.g., meetings, presentations, submittals, surveys, haul road or storage yard maintenance, dust control, security) will not be cost loaded. Evenly distribute the costs across the associated construction activities. Contractor overhead and profit including salaries for field office personnel, if applicable, must be proportionately spread over all pay items and not included as individual pay items.

1.4 CONTRACT MODIFICATIONS

In conjunction with the Contract Clause DFARS 252.236-7000 Modification Proposals-Price Breakdown, and where actual ownership and operating costs of construction equipment cannot be determined from Contractor accounting records, base equipment use rates upon the applicable provisions of the EP 1110-1-8.

1.5 CONTRACTOR'S INVOICE AND CONTRACT PERFORMANCE STATEMENT

1.5.1 Content of Invoice

Requests for payment will be processed in accordance with the Contract Clause FAR 52.232-27 Prompt Payment for Construction Contracts and FAR 52.232-5 Payments Under Fixed-Price Construction Contracts. Invoices not completed in accordance with contract requirements will be returned to the Contractor for correction of the deficiencies. Include the documents listed below in the requests for payment.

a. The Contractor's invoice, on NAVFAC Form 7300/30 furnished by the Government, showing in summary form, the basis for arriving at the amount of the invoice. Form 7300/30 must include certification by Quality Control (QC) Manager as required by the Contract.

b. The Estimate for Voucher/ Contract Performance Statement on NAVFAC Form 4330/54 furnished by the Government. Use NAVFAC Form 4330, unless otherwise directed by the Contracting Officer, on NAVFAC Contracts when a Monthly Estimate for Voucher is required.

c. Contractor's Monthly Estimate for Voucher and Contractors Certification (NAVFAC Form 4330) with Subcontractor and supplier payment certification. Other documents, including but not limited to, that need to be received prior to processing payment include the following submittals as required. These items are still required monthly even when a pay voucher is not submitted.

d. Monthly Work-hour report.

e. Updated Construction Progress Schedule and tabular reports required by the contract.

f. Contractor Safety Self Evaluation Checklist.

g. Updated submittal register.

h. Solid Waste Disposal Report.

i. Certified payrolls.

j. Updated testing logs.

k. Other supporting documents as requested.

1.5.2 Submission of Invoices

If DFARS Clause 252.232-7006 Wide Area Work Flow Payment Instructions is included in the Contract, provide the documents listed in above paragraph CONTENT OF INVOICE in their entirety as attachments in Wide Area Work Flow (WAWF) for each invoice submitted. The maximum size of each WAWF attachment is two megabytes, but there are no limits on the number of attachments. If a document cannot be attached in WAWF due to system or size restriction, provide it as instructed by the Contracting Officer.

Monthly invoices and supporting forms for work performed through the anniversary award date of the Contract must be submitted to the Contracting Officer within 5 calendar days of the date of invoice. For example, if Contract award date is the 7th of the month, the date of each

monthly invoice must be the 7th and the invoice must be submitted by the 12th of the month.

1.5.3 Final Invoice

a. A final invoice must be accompanied by the certification required by DFARS 252.247.7023 Transportation of Supplies by Sea, and the Contractor's Final Release. If the Contractor is incorporated, the Final Release must contain the corporate seal. An officer of the corporation must sign and the corporate secretary must certify the Final Release.

b. For final invoices being submitted via WAWF, the original Contractor's Final Release Form and required certification of Transportation of Supplies by Sea must be provided directly to the respective Contracting Officer prior to submission of the final invoice. Once receipt of the original Final Release Form and required certification of Transportation of Supplies by Sea has been confirmed by the Contracting Officer, the Contractor must then submit final invoice and attach a copy of the Final Release Form and required certification of Transportation of Supplies by Sea in WAWF.

c. Final invoices not accompanied by the Contractor's Final Release and required certification of Transportation of Supplies by Sea will be considered incomplete and will be returned to the Contractor.

1.6 PAYMENTS TO THE CONTRACTOR

Payments will be made on submission of itemized requests by the Contractor which comply with the requirements of this section, and will be subject to reduction for overpayments or increase for underpayments made on previous payments to the Contractor.

1.6.1 Obligation of Government Payments

The obligation of the Government to make payments required under the provisions of this Contract will, at the discretion of the Contracting Officer, be subject to reductions and suspensions permitted under the FAR and agency regulations including the following in accordance with FAR 32.103 Progress Payments Under Construction Contracts:

a. Reasonable deductions due to defects in material or workmanship;

b. Claims which the Government may have against the Contractor under or in connection with this Contract;

c. Unless otherwise adjusted, repayment to the Government upon demand for overpayments made to the Contractor; and

d. Failure to maintain accurate "as-built" or record drawings in accordance with FAR 52.236.21 and the contract.

e. Failure to submit accurate monthly schedule updates in accordance with the contract.

1.6.2 Payment for Onsite and Offsite Materials

Progress payments may be made to the Contractor for materials delivered on the site, for materials stored off construction sites, or materials that

are in transit to the construction sites under the following conditions:

a. FAR 52.232-5(b) Payments Under Fixed Price Construction Contracts.

b. Materials delivered on the site, but not installed, and off-site materials to be considered for progress payment must be major high cost, long lead, special order, or specialty items, not susceptible to deterioration or physical damage in storage or in transit to the construction site. Examples of materials acceptable for payment consideration include, but are not limited to, structural steel, non-magnetic steel, non-magnetic aggregate, equipment, machinery, large pipe and fittings, precast/prestressed concrete products, plastic lumber (e.g., fender piles/curbs), and high-voltage electrical cable. Materials not acceptable for payment include consumable materials such as nails, fasteners, conduits, gypsum board, glass, insulation, and wall coverings.

c. Provide the Contracting Officer with documentation (e.g., Purchase Orders or Material Contracts) to justify payment for materials in advance of installation. When appropriate, include the Defense Priorities and Allocations System (DFAS) ratings (e.g., DX or DO) on purchase orders or material contracts to ensure timely delivery.

d. Materials to be considered for progress payment prior to installation must be specifically and separately identified in the Contractor's estimates of work submitted for the Contracting Officer's approval in accordance with Schedule of Prices requirement of this Contract. Requests for progress payment consideration for such items must be supported by documents establishing their value (e.g., paid invoices) and that the title requirements of the clause at FAR 52.232-5 Payments Under Fixed-Price Construction Contracts have been met.

e. Ensure materials are adequately insured and protected from theft and exposure. Provide insurance documentation (e.g., Builder's Risk Insurance) which covers the overall value of the materials to be paid in advance of installation.

f. Provide a written consent from the surety company with each payment request for offsite materials.

g. Materials to be considered for progress payments prior to installation must be stored either in Hawaii, Guam, Puerto Rico, or the Continental United States. Other locations are subject to written approval by the Contracting Officer.

h. Materials in transit to the job site or storage site are not acceptable for payment.

PART 2 PRODUCTS

Not used.

PART 3 EXECUTION

Not used.

-- End of Section --

SECTION 01 30 00

ADMINISTRATIVE REQUIREMENTS
11/20, CHG 5: 02/25

PART 1 GENERAL

1.1 REFERENCES

The publications listed below form a part of this specification to the extent referenced. The publications are referred to within the text by the basic designation only.

U.S. ARMY CORPS OF ENGINEERS (USACE)

EM 385-1-1	(2024) Safety -- Safety and Occupational Health (SOH) Requirements

1.2 SUBMITTALS

Government approval is required for submittals with a "G" classification. Submittals not having a "G" classification are for Contractor Quality Control approval. Submit the following in accordance with Section 01 33 00 SUBMITTAL PROCEDURES:

SD-01 Preconstruction Submittals

View Location Map

Progress and Completion Pictures

1.3 VIEW LOCATION MAP

Submit, prior to or with the first digital photograph submittals, a sketch or drawing indicating the required photographic locations. Update as required if the locations are moved.

1.4 PROGRESS AND COMPLETION PICTURES

Photographically document site conditions prior to start of construction operations. Include aerial photographs. Provide monthly, and within one month of the completion of work, digital photographs, 1600x1200x24 bit true color minimum resolution in JPEG file format showing the sequence and progress of work. Take a minimum of 20 digital photographs each week throughout the entire project from a minimum of ten different viewpoints selected by the Contractor unless otherwise directed by the Contracting Officer. Submit with the monthly invoice two sets of digital photographs, each set on a separate compact disc (CD) or data versatile disc (DVD), cumulative of all photos to date. Indicate photographs demonstrating environmental procedures. Provide photographs for each month in a separate monthly directory and name each file to indicate its location on the view location sketch. Also provide the view location sketch on the CD or DVD as a digital file. Include a date designator in file names. Photographs provided are for unrestricted use by the Government.

1.5 MINIMUM INSURANCE REQUIREMENTS

Provide the minimum insurance coverage required by FAR 28.307-2 Liability,

during the entire period of performance under this contract. Provide other insurance coverage as required by Virginia law.

1.6 SUPERVISION

1.6.1 Superintendent Qualifications

Provide project superintendent with a minimum of 10 years experience in construction with at least 5 of those years as a superintendent on projects similar in size and complexity. The individual must be familiar with the requirements of EM 385-1-1 and have experience in the areas of hazard identification and safety compliance. The individual must be capable of interpreting a critical path schedule and construction drawings. The qualification requirements for the alternate superintendent are the same as for the project superintendent. The Contracting Officer may request proof of the superintendent's qualifications at any point in the project if the performance of the superintendent is in question.

For projects where the superintendent is permitted to also serve as the Quality Control (QC) Manager as established in Section01 45 00 QUALITY CONTROL, the superintendent must have qualifications in accordance with that section.

1.6.2 Minimum Communication Requirements

Have at least one qualified superintendent, or competent alternate, capable of reading, writing, and conversing fluently in the English language, on the job-site at all times during the performance of Contract work. In addition, if a Quality Control (QC) representative is required on the Contract, then that individual must also have fluent English communication skills.

1.6.3 Duties

The project superintendent is primarily responsible for managing subcontractors and coordinating day-to-day production and schedule adherence on the project. The superintendent is required to attend Red Zone meetings, partnering meetings, and quality control meetings. The superintendent or qualified alternative must be on-site at all times during the performance of this contract until the work is completed and accepted.

1.6.4 Non-Compliance Actions

The Project Superintendent is subject to removal by the Contracting Officer for non-compliance with requirements specified in the contract and for failure to manage the project to ensure timely completion. Furthermore, the Contracting Officer may issue an order stopping all or part of the work until satisfactory corrective action has been taken. No part of the time lost due to such stop orders is acceptable as the subject of claim for extension of time or excess costs or damages by the Contractor.

1.7 PRECONSTRUCTION MEETING

Immediately after award, prior to commencing any work at the site, coordinate with the Contracting Officer a time and place to meet for the Preconstruction Meeting. The meeting must take place within 35 calendar days after award of the contract, but prior to commencement of any work at

the site. The purpose of this meeting is to discuss and develop a mutual understanding of the administrative requirements of the Contract including but not limited to: daily reporting, invoicing, value engineering, safety, base-access, outage requests, hot work permits, schedule requirements, quality control, schedule of prices or earned value report, shop drawings, submittals, cybersecurity, prosecution of the work, government acceptance, final inspections and contract close-out. Contractor must present and discuss their basic approach to scheduling the construction work and any required phasing.

1.7.1 Attendees

Contractor attendees must include the Project Manager, Superintendent, Site Safety and Health Officer (SSHO), Quality Control Manager and major subcontractors.

1.8 FACILITY TURNOVER PLANNING MEETINGS (Red Zone Meetings)

Meet with the Government to identify strategies to ensure the project is carried to expeditious closure and turnover to the Client. Start planning the turnover process at the Pre-Construction Conference meeting with a discussion of the Red Zone process and convene at regularly scheduled Red Zone Meetings beginning at approximately 75 percent of project completion. Include the following in the facility Turnover effort:

1.8.1 Red Zone Checklist

a. Contracting Officer's Technical Representative (COTR) will provide the Contractor a copy of the Red Zone Checklist template.

b. Prior to 75 percent completion, modify the Red Zone Checklist template by adding or deleting critical activities applicable to the project and assign planned completion dates for each activity. Submit the modified Red Zone Checklist to the Contracting Officer. The Contracting Officer may request additional activities be added to the Red Zone Checklist at any time as necessary.

1.8.2 Meetings

a. Conduct regular Red Zone Meetings beginning at approximately 75 percent project completion, or three to six months prior to Beneficial Occupancy Date (BOD), whichever comes first.

b. The Contracting Officer will establish the frequency of the meetings, which is expected to increase as the project completion draws nearer. At the beginning, Red Zone meetings may be every two weeks then increase to weekly towards the final month of the project.

c. Using the Red Zone Checklist as a Plan of Action and Milestones (POAM) and basis for discussion, review upcoming critical activities and strategies to ensure work is completed on time.

d. During the Red Zone Meetings discuss with the COTR any upcoming activities that require Government involvement.

e. Maintain the Red Zone Checklist by documenting the actual completion dates as work is completed and update the Red Zone Checklist with revised planned completion dates as necessary to match progress. Distribute copies of the current Red Zone Checklist to attendees at

each Red Zone Meeting.

1.9 PARTNERING

To most effectively accomplish this Contract, the Contractor and Government must form a cohesive partnership with the common goal of drawing on the strength of each organization in an effort to achieve a successful project without safety mishaps, conforming to the Contract, within budget and on schedule. The partnering team must consist of personnel from both the Government and Contractor including project level and corporate level leadership positions. Key Personnel from the supported command, end user, NAVFAC, PWD, FEAD/ROICC, Contractor, key subcontractors and the Designer of Record (DOR) (regardless of whether the contract is a design-build or a design-bid-build) are required to participate in the Partnering process.

1.9.1 Team-Led (Informal) Partnering

a. The Contracting Officer will coordinate the initial Team-Led (Informal) Partnering Session with key personnel of the project team, including Contractor and Government personnel. The Partnering Session will be co-led by the Government Construction Manager and Contractor's Project Manager.

b. The Initial Team-led Partnering session may be held concurrently with the Pre-Construction meeting. Partnering sessions will be held at a location mutually agreed to by the Contracting Officer and the Contractor, typically at a conference room on-base or at the Contractor's temporary trailer.

c. The Initial Team-Led Partnering Session will be conducted and facilitated using electronic media (a video and accompanying forms) provided by Contracting Officer.

d. The Partners will determine the frequency of the follow-on sessions.

e. Participants will bear their own costs for meals, lodging and transportation associated with Partnering.

PART 2 PRODUCTS

Not used.

PART 3 EXECUTION

Not used.

-- End of Section --

SECTION 01 31 23.13 20

ELECTRONIC CONSTRUCTION AND FACILITY SUPPORT CONTRACT MANAGEMENT SYSTEM (eCMS)
08/23, CHG 1: 02/24

PART 1 GENERAL

1.1 CONTRACT ADMINISTRATION

Utilize the Naval Facilities Engineering Systems Command's (NAVFAC's) Electronic Construction and Facility Support Contract Management System (eCMS) for the transfer, sharing, and management of electronic technical submittals and documents. The web-based eCMS is the designated means of transferring technical documents between the Contractor and the Government. Paper media or email submission, including originals or copies, of the documents are not permitted unless identified within the contract.

All government contracting specialist/officer, legal, and command communications will remain the same.

1.2 USER PRIVILEGES

The Contractor's key staff may be provided access to eCMS. Contact the COR for eCMS account access. Project roles and system roles will be established to control each user's menu, application, and software privileges, including the ability to create, edit, or delete objects. Additional project roles may be assigned for workflow. The COR makes the final decision on roles for the project. User's ability to view, edit documents may be lowered at the discretion of the COR.

Only one eCMS user account is required regardless of the number of user's projects. Notify the COR within seven calendar days if a contractor user is no longer associated with company or project so they can remove them from any open record and inactivate them from the project.

1.2.1 eCMS Subcontractor Users

If the contractor's user is a subcontractor, the subcontractor must be registered under the name of their company and email. For example it is common for contractors to contract Quality Control Managers. The QC Manager's account should be under their company's name and email reducing the number of eCMS accounts required.

1.2.2 Users with Multiple Roles

Users may have multiple roles associated with their account within eCMS. Roles are used in workflow. When a user is added to the project, they will be assigned the default role when the user was created. Contact the COR to change or add roles to the user for the project.

1.2.3 Loss of Privilege

Users may lose privilege to access eCMS at the discretion of the Contracting Officer. The eCMS is a collaborative system that allows flexibility of use and does not restrict all inappropriate user actions. User activities are logged into eCMS in visible and background data

collection. Users found to use eCMS in an inappropriate action may have their eCMS access revoked. Examples include, but not limited to, fraudulent representations, sharing user accounts with others, and changing approved records without the consent of the COR. Depending on the severity of the infraction, the users can lose eCMS access for a period of time, permanently for the project, or lose eCMS access for any project. The contractor may appeal the suspension in writing to the contracting officer within 14 calendar days of notice. The appeal must identify the infraction, supporting information, and steps to ensure the infraction will not happen in the future.

1.3 SUBMITTALS

Government approval is required for submittals with a "G" classification. Submittals not having a "G" classification are for Contractor Quality Control approval. Submit the following in accordance with Section 01 33 00 SUBMITTAL PROCEDURES:

SD-01 Preconstruction Submittals

List of Contractor's Personnel; G

For Division 1 government approved Pre-Construction submittals, combine into a single Pre-Construction Submittal Package. Annotated with SD Type of SD-01. Pre-Construction submittal package approval date will be used as a KPI.

1.4 SYSTEM REQUIREMENTS AND CONNECTIVITY

1.4.1 General

NAVFAC eCMS requires a web-browser (platform-neutral) and Internet connection. For best results, recommend using browser in InPrivate/Incognito mode; Internet speeds greater than 40mbps when uploading files, computers with high RAM and Solid State Drives, "White List" eCMS website, Zip or Split files for better uploading. Non-NAVFAC Users are not to use VPN when using eCMS per NAVFAC IT.

The use of eCMS is required by the Contractor and all associated costs and time necessary to utilize eCMS will be borne by the Contractor with no allowance for time extensions and at no additional cost to the government.

1.4.2 Contractor Personnel List

Within 20 calendar days of contract award, provide to the Contracting Officer a list of Contractor's personnel who will have the responsibility for the transfer, sharing and management of electronic submittals, RFIs, daily reports, and other files and will require access to the eCMS. Project personnel roles which must be filled as applicable in the eCMS, include, at a minimum, the Contractor's Project Manager (KTR-PM), Superintendent (KTSUPT), Quality Control (QC) Manager (KTR-QC), Principal (KTR-PRIN), and Site Safety and Health Officer (KTR-SSHO). Notify the COR immediately of any personnel changes to the project. The Contracting Officer reserves the right to perform a security check on all potential users.

Provide the following information:

Company Name

Name (First, Last)

Email Address

Project Role (CQM, SSHO, Superintendent, CM, PM, Principal)

Existing or New eCMS User

1.5 SECURITY CLASSIFICATION

In accordance with Department of Navy guidance, all military construction contract data are unclassified, unless specified otherwise by a properly designated Original Classification Authority (OCA) and in accordance with an established Security Classification Guide (SCG). Refer to the project's OCA when questions arise about the proper classification of information.

In conformance with the Freedom of Information Act (FOIA), DoD INSTRUCTION 5200.48 CONTROLLED UNCLASSIFIED INFORMATION (CUI), and DoD requirements, any unclassified project documentation uploaded into the eCMS must be designated either "U - UNCLASSIFIED" (U) or "CUI - CONTROLLED UNCLASSIFIED INFORMATION" (CUI).NAVFAC eCMS must only be used for the transaction of unclassified information associated with construction projects. Controlled Unclassified Identification (CUI) documents may be loaded into eCMS with the appropriate markings.

1.5.1 Markings on CUI Documents

Contractor's proprietary information, or documents determined by the originator in accordance with CUI guidance, should be marked CUI. Proprietary information not marked CUI can be released under the Freedom of Information Act (FOIA). Apply the appropriate markings before any document is uploaded into eCMS. Markings are not required on Unclassified U documents.

1.6 eCMS UTILIZATION

Establish, maintain, and update data and documentation in the eCMS throughout the duration of the contract. Utilize eCMS to transfer all submittals, RFIs, daily reports, and other files required by contract to be forwarded to the government.

Full eCMS use is required. All Submittals/Information to use eCMS Modules including, but not limited to, RFIs, Daily Reports, Meeting Minutes, Communications, Issues, Punch Lists, Checklists, and Flysheets, unless otherwise directed by the COR or Contracting Officer.

1.6.1 Restricted Information

Personally Identifiable Information (PII) transmittal such as credit card, driver's license, passport, social security, and payroll number are not permitted in eCMS. Name, address, and email are permitted. Pre-negotiation information such as cost estimates that require formal negotiations are not allowed. For example, proposed changes over the SAP level of $250k require formal negotiations. Cost estimates for LEAN, ULTRA LEAN, and Design Changes under the SAP level are at the discretion of the COR's or Contract Specialist/Officer's direction. The eCMS must only be used for the transaction of unclassified information associated

with construction projects. Controlled Unclassified Identification (CUI) documents may be loaded into eCMS with the appropriate markings. Uploading of files directly into the Documents folder is not allowed. All documents must be uploaded using an eCMS module.

1.6.2 Naming Convention for Files

Titles of files uploaded are to be descriptive of the purpose and content of the file. For example RFI_ROOF_Leak.doc or for submittals, SUB_LIGHT_FIXTURE.pdf. Titles of file to be uploaded must only contain uppercase letters, lowercase letters, numbers, hyphens (-), underscores (_) and periods (.). Use of any other characters is not allowed and may create an error. When practicable, adding the record number to the title is desired. For example RFI_XYZ12345_ROOF_Leak.doc. Uploading files with the same title will create a new revision in eCMS. Original revision is Rev 0, the first revision is Rev 1. Uploaded files are to use the default file location regardless of the module used unless directed by the COR.

Table 1 also identifies which eCMS application is to be used in the transmittal of data (these are subject to change based on the latest software configuration).

Table 1 - Project Documentation Types

SUBJECT/NAME	REMARKS	eCMS APPLICATION
As-Built Drawings	Locations of sensitive areas must be labeled as either "Controlled Area" or "Restricted Area" and may be shown on unclassified documents with the approval from Site Security Manager	Submittals
Building Information Modeling (BIM)	Locations of sensitive areas must be labeled as either "Controlled Area" or "Restricted Area" and may be shown on unclassified documents with the approval from Site Security Manager	Submittals
Construction Permits	Refer to rules of the issuing activity, state or jurisdiction	Submittals
Construction Schedules (Activities and Milestones)		Submittals
Construction Schedules		Submittals
Construction Schedules (3-Week Look ahead)	Import the schedule file into the scheduling application, and select "Approve" to establish a new schedule baseline	Meeting Minutes

SUBJECT/NAME	REMARKS	eCMS APPLICATION
DD 1354 Transfer of Real Property	When applicable, required for final billing.	Submittals
Daily Production Reports	Provide weather conditions, crew size, man-hours, equipment, and materials information	Daily Report
Daily Quality Control (QC) Reports	Provide QC Phase, Definable Features of Work Identify visitors	Daily Report
Designs and Specifications	Locations of sensitive areas must be labeled as either "Controlled Area" or "Restricted Area" and may be shown on unclassified documents with the approval from Site Security Manager	Submittals
Environmental Notice of Violation (NOV), Corrective Action Plan	Refer to rules of the issuing activity, state or jurisdiction	Submittals
Environmental Protection Plan (EPP)		Submittals
Invoice (Supporting Documentation)	Applies to supporting documentation only. Invoices are submitted in Wide-Area Workflow (WAWF)	Submittals
Jobsite Documentation, Bulletin Board, Labor Laws, SDS	Redact any PII information when loaded into eCMS	Submittals
Meeting Minutes		Meeting Minutes
Modification Documents	Provide final modification documents for the project. Upload into Modifications RFPs folder	Communications
Operations & Maintenance Support Information (OMSI/eOMSI), Facility Data Worksheet	1. Locations of sensitive areas must be labeled as either "Controlled Area" or "Restricted Area" and may be shown on unclassified documents with the approval from Site Security Manager 2. Design reviews will be performed in existing "Dr Checks"	Submittals

SUBJECT/NAME	REMARKS	eCMS APPLICATION
Photographs	Subject to base/installation restrictions	Submittals
QCM Initial Phase Checklists		Meeting Minutes or Checklists
QCM Preparatory Phase Checklists		Meeting Minutes or Checklists
Quality Control Plans		Submittals
QC Certifications		Submittals
QC Punch List		Punch Lists
Red-Zone Checklist		Punch List or Checklists
Rework Items List		Punch Lists
Request for Information (RFI) Post-Award		RFIs
Safety Plan		Submittals
Safety - Activity Hazard Analyses (AHA)		Submittals
Safety - Mishap Reports		Daily Report
Shop Drawings	Locations of sensitive areas must be labeled as either "Controlled Area" or "Restricted Area" and may be shown on unclassified documents with the approval from Site Security Manager	Submittals
Storm Water Pollution Prevention (Notice of Intent - Notice of Termination)	Refer to rules of the issuing activity, state or jurisdiction	Submittals
Submittals and Submittal Register		Submittals

SUBJECT/NAME	REMARKS	eCMS APPLICATION
Testing Plans, Logs, and Reports		Submittals
Training/Reference Materials		Submittals
Training Records (Personnel)	Redact any PII information if storing in eCMS	Submittals
Utility Outage/Tie-In Request/Approval		Submittals
Warranties/BOD Letter		Submittals
Quality Assurance Reports		Checklists (Government initiated)
Non-Compliance Notices		Non-Compliance Notices (Government initiated)
Other Government-prepared documents		GOV ONLY
Letters to government contracting, claims, REAs, and other contracting officer communications	eCMS is not the primary tool to use in contracting officer communications. eCMS can only store documents or letters after the submission to the contracting officer is made.	Communications
All Othere Documents	Refer to FOIA guidelines and contact the FOIA official to determine whether exemptions exist	As applicable

1.6.3 RFIs Module

Create contractor RFIs using eCMS RFIs module. The contractor must confirm the numbering convention with the COR if different than eCMS default.

If the government (GOV) Response has "No" Cost or Schedule Impact, this reply is given with the expressed understanding that it does not constitute a basis for any change in the amount or time of subject contract. Information provided in this response does not authorize work not currently included in the contract. If GOV Response is "Yes" or "Potentially" then this response may require a change to the contract. If the contractor disagrees with either the government's No Cost determination or No Schedule impact determination, or both, the contractor

has 14 calendar days to notify the COR and Contracting Officer in writing.

1.6.4 Submittals Module

Create contractor submittals using eCMS Submittals module. The contractor must confirm the numbering convention with the COR if different than eCMS default.

1.6.5 Submittal Packages Module

Create submittal packages using the eCMS Submittal Packages module in lieu of or in addition to Related Objects. Submittal Packages track completion of the packaged submittals and is used in NAVFAC HQ's KPIs.

1.6.6 Communications Module

Create communications using the eCMS Communications module. The Communications module is used to create or document communications that are not a part of other eCMS modules. Use of Communications module will memorialize information into an eCMS record file. The following are Types of Communications:

Email

Memo to File

Face to Face

Telephone

Web Collaboration

Photos

Other Documents

Other

Unless directed by the COR, upload documents or files that do not have a corresponding eCMS module. Choose "Photos" Type for Photos and "Other Documents" for all other documents.

1.6.7 Issues Module

Create or respond to issues using the eCMS Issues module. Respond to CPARS issues using the Issues module.

1.6.8 Meeting Minutes Module

Create or respond to Meeting Minutes using the eCMS Meetings module.

Document required contractual meetings. Dates of meetings are used in NAVFAC KPIs. Minimum meetings in eCMS include the following:

Post Award Kickoff (PAK)

Pre-construction (Pre Con)

Initial and Preparatory Three Phases of Control

Quality Control (QC)

1.6.9 Potential Change Items Module

Not used.

1.6.10 Daily Report Module

Create Daily Reports using the eCMS Daily Report Module. The contractor must confirm the numbering convention with the COR if different than eCMS default.

1.6.11 Punchlists Testing Logs (Legacy)

Punchlist Testing Logs is a legacy program that is being replaced by the Punch Lists Module. This module is to be used for reference of past projects. Use the Punch Lists Module for all future work.

1.6.12 Punch Lists Module

The eCMS Punch Lists module is useful more than just for Punchlists. The module includes the capability of batch editing, create items from Optical Character Recognition (OCR) plans, assign tasks and track completion of individual items.

Create the following using the Punch Lists module:

Rework Items List

DFOW List

Punch-Out Inspection

Pre-Final Punchlist Inspection

Final Punchlist Inspection

Testing Logs

1.6.13 FWD UltraLean COAR RFP Module

Not used.

1.6.14 Non-Compliance Notices (NCN) Module

Respond to Non-Compliance Notices listed in the Non-Compliance Notices module.

1.6.15 Checklists

Use Checklist listed in the contractor's eCMS menu and as directed by the COR. Checklists capture data and is used in dashboards and KPIs.

1.6.15.1 Partnering Team Health Survey Checklist

Contractor must use the eCMS checklist to document the partnering team health survey. Partnering Team Health Survey is in accordance with the Partnering Specification of this contract.

1.6.16 Flysheets

Use Flysheets listed in the contractor's eCMS menu, if available, and as directed by the COR. Flysheets allow the contractor to print out information from other systems and upload into eCMS. The eCMS will use OCR to capture the information as data. Flysheets capture data and used in dashboards and KPIs.

1.6.17 eCMS Outage

In the case where eCMS is unavailable for 8 hours or more, paper or email may be used in the interim to maintain project schedule.

Once the system is operational, all final records are required to be recreated using the appropriate module. Subject/title of the record to include the type of record i.e., RFI/Submittal/Daily Report/Communication/Other, the identification number(s), and the statement "Processed Outside of eCMS". Example, "RFI 001 Processed Outside of eCMS".

1.6.18 User Account Activity

NAVFAC eCMS captures user data and activities that are directly related to the user's account. The user agrees through the use of eCMS, their account activities will be captured and can be displayed on eCMS printed reports.

1.7 QUALITY ASSURANCE

Requested Government response dates on Submittals must be in accordance with the terms and conditions of the Contract unless previously agreed by the COR. Requesting response dates earlier than the required review and response time, without concurrence by the Government COR, may be cause for rejection.

Incomplete submittals will be rejected without further review and must be resubmitted. Required Government response dates for resubmittals must reflect the date of resubmittal, not the original submittal date.

All submittals and associated attachments must be transmitted to the Government via the COR. Transmittals are no longer required when using eCMS since approval status is tracked on the submittal. Transmittal forms can be attached to submittals if approved by the COR. Submittals requiring government approval are "Transmitted For" "Approval". Submittals requiring contractor approved submittals, including those designated for Contractor Quality Control approval or Information Only, are "*Transmitted For" "Information Only" in the Submittal Module. Provide and sign the QC certification or approving statement on the attachment per submittal specification section. When Submittal Packages are required, use eCMS Submittal Packages after creating individual submittals. Importing Submittals from the Submittal Register is optional. Contact the COR for the data conversion requirements.

PART 2 PRODUCTS

Not used.

PART 3 EXECUTION

Not used.

-- End of Section --

THIS PAGE INTENTIONALLY LEFT BLANK

SECTION 01 32 17.00 20

COST-LOADED NETWORK ANALYSIS SCHEDULES (NAS)
05/25

PART 1 GENERAL

1.1 DEFINITIONS

The cost-loaded Network Analysis Schedule (NAS) is a tool to manage the project, both for Contractor and Government activities. The NAS is also used to report progress, evaluate time extensions, and provide the basis for progress payments.

For consistency, when scheduling software terminology is used in this section, the terms in Oracle Primavera's scheduling programs are used.

1.2 NAS REQUIREMENTS PRIOR TO THE START OF WORK

1.2.1 Preliminary Scheduling Meeting

Before preparation of the Baseline NAS, and prior to the start of work, meet with the Contracting Officer to discuss the proposed NAS and the requirements of this section. Propose projected data dates for monthly update NAS for the project and incorporate each monthly update submittal into the submittal register. Discuss required forms, terminology, and submittal requirements of this section and other requirements related to schedule management for this contract. Use the NAVFAC-provided Preliminary Scheduling Meeting Guideline in the completion of the intended mutual understanding.

1.2.2 Baseline NAS

Submit the Baseline NAS within 30 calendar days after contract award. Data date must be set to contract award date and no progress recorded for any activity. Only bonds and the required Preliminary Scheduling Meeting may be recorded as complete prior to acceptance of the Baseline NAS. The acceptance of a Baseline NAS is a condition precedent to:

a. The Contractor starting demolition work or construction stage(s) of the contract.

b. Processing Contractor's invoices(s) for any items other than bonds.

c. Review of any NAS updates. The contractor is still required to submit monthly NAS updates. Without an accepted baseline NAS, the Government may return Monthly NAS update as received for record.

Submittal of the Baseline NAS is the Contractor's certification that the submitted NAS meets the requirements of the Contract Documents and represents the Contractor's plan on how the work will be accomplished. Provide all items listed in paragraph REQUIRED TABULAR REPORTS AND NATIVE P6 XER FILES with baseline NAS submittal.

1.3 WEEKLY LOOK AHEAD SCHEDULE

1.3.1 Quality Control and Production Integration with NAS

Submit the first Look Ahead Schedule 30 days after contract award and continue to submit weekly until contract completion.

Transmit the Weekly Look Ahead Schedule Submittal to the Contracting Officer on the first day of the current week that the Look Ahead Schedule covers and at least one working day prior to any Quality Control meetings. Contractor is required to provide all attendees at meetings with a copy of the Look Ahead Schedule. A Look Ahead Schedule is required to be submitted weekly regardless of whether a meeting is held or not.

1.3.2 Weekly Look Ahead Schedule Requirements

Prepare and issue a Three-Week Look Ahead Schedule to provide a more detailed day-to-day plan of upcoming work identified on the current Network Analysis Schedule. Requirements include:

a. For each Look Ahead Schedule activity, identify parent NAS activity number(s). The parent NAS activity is the activity in the NAS that would incorporate the Look Ahead Schedule activity requirement and scope of work.

b. Update schedule each week to show the planned work for the following three-week period. Also include previous week, as-built work, showing actual start and finish dates.

c. Include upcoming outages, closures, preparatory meetings, and initial meetings, testing and inspections.

d. Identify any offsite fabrication and production activities.

e. Clearly identify Longest Path activities on the Weekly Look Ahead Schedule. Include a key or legend that distinguishes longest path activities. Include all Longest Path activity NAS start/finish dates exceeded and occurring during this period.

f. Identify responsibility for each activity.

g. The detail work plans are to be bar chart type schedules, derived from but maintained separately from the Project NAS on an electronic spreadsheet program and printed on 11 by 17 inch sheets as directed by the Contracting Officer.

h. Activities must not exceed 5 working days in duration and have sufficient level of detail to assign crews, tools and equipment required to complete the work.

i. Look Ahead activities are not limited to only onsite work. Include submittal, offsite fabrication, and procurement activities. Include design activities, meetings, and coordination when part of scope.

j. Upload the Weekly Look Ahead Schedules to eCMS as a submittal by the date and time required.

1.4 MONTHLY NETWORK ANALYSIS

Submittal of Monthly NAS is the Contractor's certification that the submitted NAS meets the requirements of the Contract Documents and represents the Contractor's plan on how the work will be accomplished. Provide all items listed in paragraph REQUIRED TABULAR REPORTS AND NATIVE P6 XER FILES with the monthly NAS submittal.

1.4.1 Monthly Update Meeting

Meet with Government representative(s) at monthly intervals to review and agree on the information presented in the Monthly NAS Update. The Monthly Update Meeting must be a separate and distinct meeting from other meetings required of the contract. As a minimum, accomplish the following with each meeting held monthly:

a. Prior to the meeting, provide an agenda of proposed topics to be discussed to include but not limited to narrative report and items listed in paragraph REQUIRED TABULAR REPORTS. Document agenda and minutes with Meeting Minutes object in eCMS for each monthly update meeting.

b. The Approved Designated Project Scheduler must present the NAS data using Oracle Primavera P6 software and have baseline NAS, monthly update NAS, and Time Impact Analysis native files available to review as necessary.

c. Review Time Impact Analysis.

d. Document action items in eCMS Meeting Minutes for necessary revisions to Monthly NAS Update and to address any delays and or problem areas in a timely manner.

1.4.2 Monthly NAS Updates

a. The submission of an accepted, updated NAS to the Government is a condition precedent to the processing of the Contractor's invoice.

b. Regardless of whether an invoice is being submitted monthly, or no project progress occurred, an updated NAS (or with new data date) must be submitted monthly to the Government. The Monthly NAS update must be submitted within 5 calendar days of the data date.

c. Regardless of whether a baseline or other NAS is submitted andor accepted, an updated NAS must be submitted monthly to the Government. Monthly updates submitted before the baseline being accepted may be returned as received for record.

d. Provide all items listed in paragraph REQUIRED TABULAR REPORTS AND NATIVE P6 XER FILES, with each monthly NAS update submittal.

e. Activity progress must incorporate as-built events as they occurred and correspond to records including but not limited to submittals and daily production and quality control reports.

f. Software Settings: Handle NAS calculations through Retained Logic, not Progress Override. Out of Sequence progress is not allowed. Relationships must be changed to reflect as-built relationships. Show all activity durations and float values in days. Show activity

progress using Remaining Duration. Set default activity type to "Task Dependent".

g. Updated NAS must reflect current Contract Completion Date and contract value in accordance with all conformed contract modifications issued prior to data date of NAS update.

1.4.3 As-Built NAS

As a condition precedent to the release of retention and making final payment, submit an "As-Built NAS," as the last NAS update showing all activities at 100 percent completion. This NAS must reflect the exact manner in which the project was actually constructed.

1.5 CORRESPONDENCE AND TEST REPORTS

Reference NAS Activity IDs that are being addressed in each correspondence (e.g., letters, Submittals, Requests for Information (RFIs), e-mails, meeting minute items, Production and QC Daily Reports, material delivery tickets, photographs) and test report (e.g., concrete, soil compaction, weld, pressure).

1.6 ADDITIONAL NETWORK ANALYSIS SCHEDULE REQUIREMENTS

Other specification sections may include additional NAS related requirements, including systems to be inspected, tested and commissioned, and submittal procedures. Those requirements must be incorporated into the NAS.

1.7 SUBMITTALS

Government approval/acceptance is required for submittals with a "G" classification. Submittals not having a "G" classification are for Contractor Quality Control approval. Submit the following in accordance with Section 01 33 00 SUBMITTAL PROCEDURES:

SD-01 Preconstruction Submittals

Baseline NAS; G

Designated Project Scheduler; G

SD-07 Certificates

Weekly Look Ahead Schedule

Monthly NAS Updates; G

SD-11 Closeout Submittals

As-Built NAS; G

1.8 SOFTWARE

Prepare and maintain project NAS using Oracle Primavera P6 software in a version compatible with Government's current version. Submit XER files exported as version 17 or earlier. Importing data into P6 using data conversion techniques or third party software is cause for rejection of the submitted NAS. NAS with Performing Organizational Breakdown Structure

(POBS) data in any form other than column is cause for rejection. NAS must be scheduled by using the Schedule command after last entry in Oracle Primavera P6 prior to export for submission to the Government.

1.9 DESIGNATED PROJECT SCHEDULER

Within 30 calendar days of contract award, submit to the Contracting Officer for approval an individual who will serve as the Designated Project Scheduler. Include a copy of the candidate's resume with qualifications. The Designated Project Scheduler is subject to removal by the Contracting Officer for non-compliance with the requirements specified in the Contract. Payment request will not be processed without an approved Designated Project Scheduler.

1.9.1 Qualifications

The Designated Project Scheduler must have served as a scheduler and prepared and maintained at least three previous NAS for projects, at least one within the last 5 years of similar size and complexity to this contract, using Oracle Primavera P6.

1.9.2 Duties

Duties of the Designated Project Scheduler include to be actively involved and be responsible for the following:

a. Prepare Baseline NAS.

b. Prepare monthly NAS updates.

c. Prepare tabular reports.

d. Prepare Time Impact Analysis (TIA) as necessary.

e. Provide certification of contract compliance for each NAS and TIA submittal transmitted to government for review.

f. Participate with the Prime Contractor and Government Representative in a monthly teleconference call, and scheduled with sufficient time to support the Monthly Network Analysis Updates process, to discuss project status, NAS updates, critical activities, potential delays, and contract modifications impacting any project progress. Have a computer with P6 software available during the meeting.

g. Be present on the project site full-time during working hours.

1.10 NETWORK SYSTEM FORMAT

Prepare the NAS in accordance with the following Primavera P6 settings and parameters. Deviation from these settings and parameters, without prior consent of the Contracting Officer, is cause for rejection of NAS submittal.

1.10.1 NAS Activity Properties and Level of Detail

1.10.1.1 Activity Identification and Organization

a. Identify construction activities planned for the project and other activities that could impact project completion if delayed in the NAS.

b. Each activity must have a unique name.

c. Identify administrative type activity/milestones, including all pre-construction submittal and permit requirements prior to demolition or construction stage.

d. Include durations for procurement, Contractor quality control, acceptance testing and training in the NAS.

e. Include the Government approval time required for the submittals that require Government Approval prior to construction, as indicated in Section 01 33 00 SUBMITTAL PROCEDURES.

f. Create separate activities for each Phase, Area, Floor Level and Location the activity is occurring.

g. Do not use activities to represent non-work type reference (e.g., Serial Letter, Request for Information) in NAS. When RFIs need to be included in NAS, identify Non-work reference with use of added Activity codes (e.g, RFI code, Serial Letter Code). Document use of added activity codes in narrative report.

Activity categories included in the NAS are specified below.

1.10.1.2 Activity Logic

a. With the exception of the Contract Award and Contract Completion Date (CCD) milestone activities, activity must not be open-ended; each activity must have at least one predecessor and at least one successor.

b. Activities must not have open start or open finish (dangling) logic.

c. Do not use lead or lag logic without Contracting Officer prior approval. Request for approval must be submitted at the required Preliminary Scheduling Meeting for use in the Baseline NAS and at the required Monthly Network Analysis Update Meeting for use in a monthly updated NAS.

d. Minimize redundant logic ties.

e. Once an activity exists on the NAS it must not be deleted or renamed to change the scope of the activity and must not be removed from the NAS logic without approval from the Contracting Officer. Request for approval must be submitted with the required Monthly NAS Update Narrative.

f. While an activity cannot be deleted, where said activity is no longer applicable to the NAS, but must remain within the logic stream for historical record, change the activity original and remaining duration to zero and clearly label "(NO LONGER REQUIRED)" after the Activity Name.

(1) Document any such change in the activities' "Notebook," including a date and explanation for the change.

(2) The ID number for a "NO LONGER REQUIRED" activity must not be re-used for another activity.

g. No activity can be added to the NAS without the prior approval from the Contracting Officer. Request for approval must be submitted at the required Monthly Network Analysis Update Narrative for use in a monthly updated NAS.

h. Activity Type for all activities except for milestones must be set to "Task Dependent". "Level of Effort" Activity Type is not allowed.

i. Duration Type for all activities except for milestones must be set to "Fixed Duration & Units".

j. Percent Complete Type for all activities including milestones must be set to "Physical".

1.10.1.3 Longest Path Activity Baseline Limitation

For P6 settings, critical activities are defined as being on the Longest Path. Longest Path (Critical) Activities must not make up more than 30 percent of all activity within the Construction Baseline NAS.

1.10.1.4 Assigned Calendars

All NAS activity must be assigned calendars that reflect required and anticipated non-work days.

Total work hours/day for all defined calendars is set to 8.

1.10.1.5 Activity Categories

1.10.1.5.1 Pre-construction Activities

Examples of pre-construction activities include, but are not limited to, bond approval, permits, pre-construction submittals and approvals. Include pre-construction activities that are required to be completed prior to the Contractor starting the demolition or construction stage of work.

1.10.1.5.2 Procurement Activities

Include activities necessary to manage the ordering, fabrication, and delivery of material and equipment. Procurement activities must not have a duration in excess of 60 calendar days without prior approval by the Contracting Officer. Include within sequence of off-site assembly and fabrication any quality control and testing being performed.

Examples of procurement activities include, but are not limited to: Material/equipment submittal preparation, submittal and approval of material/equipment; material/equipment fabrication and delivery, and material/equipment on-site. As a minimum, separate procurement activities must be provided for critical items, long lead items, items requiring Government approval and material/equipment procurement for which payment will be requested in advance of installation. Show each delivery with relationship tie to the Construction Activity specifically for the delivery.

1.10.1.5.3 Government Activities

Government and other agency activities that could impact progress must be clearly identified. Government activities include, but are not limited

to; Government approved submittal reviews, Government conducted inspections/tests, environmental permit approvals by State regulators, utility outages, and delivery of Government Furnished Material/Equipment.

1.10.1.5.4 Construction Quality Management (CQM) Activities

The Preparatory and Initial Phase meetings for each Definable Feature of Work identified in the Contractor's Quality Control Plan must be included in the Weekly Look Ahead Schedules. Preparatory and Initial phase meetings are not required in the NAS, but can be represented by a start milestone linked to successor parent Construction Activity. The Follow-up Phase must be represented by the Construction Activities themselves in the NAS.

1.10.1.5.5 Construction Activities

On-site construction activities that are the responsibility of the Contractor or Contractor's subcontractors must not have a duration in excess of 20 working days without prior approval by the Contracting Officer. Contractor activities must be driven by calendars that reflect Saturdays, Sundays and all Federal Holidays as non-work days, unless otherwise defined in this contract. Federal Holidays are as defined in Federal Law 5 USC 6103.

1.10.1.5.6 Turnover and Closeout Activities

Include activities or milestones for items on the NAVFAC Red Zone Checklist/POAM that are applicable to this project. As a minimum, include required Contractor testing, required Government acceptance inspections on equipment, Pre-Final Inspection, Punch List Completion, Final Inspection and Acceptance. Add an unconstrained start milestone for the initial NAVFAC Red Zone - Facility Turnover Planning Meeting at approximately 75 percent construction contract completion or six months prior to Contract Completion Date (CCD), whichever is sooner. Include a separate NAVFAC Red Zone - Facility Turnover Planning Meeting Milestone for each phase if the contract requires construction to be completed in phases.

1.10.1.6 Contract Milestones and Constraints

1.10.1.6.1 Project Start Date Milestones

Include as the first activity on the NAS a start milestone titled, "Contract Award", which must have a Mandatory Start constraint equal to the Contract Award Date.

1.10.1.6.1.1 Post-Award Kickoff (PAK) meeting Milestone

Include an unconstrained finish milestone on the NAS titled, "Post-Award Kickoff Meeting". The Post Award Kickoff Meeting may be a single day, or it may range over several days. The intent is to cover all PAK topics, including Partnering and Concept Design Workshop (if required) in one continuous session.

1.10.1.6.2 Pre-Construction Meeting Milestone

Include an unconstrained finish milestone on the NAS titled, "Pre-Construction Meeting". The Pre-Construction meeting may be a single day, or it may range over several days. The intent to cover all the Pre-Con topics, including Partnering and DD1354.

1.10.1.6.3 Preconstruction Submittals Finish Milestone

Include an unconstrained finish milestone on the NAS titled, "Preconstruction Submittals". This milestone is complete when all required preconstruction submittals have been reviewed and approved by the Government.

1.10.1.6.4 Contractor Mobilization Finish Milestone

Include an unconstrained finish milestone on the NAS titled, "Contractor Mobilization".

1.10.1.6.5 NAVFAC Red Zone - Facility Turnover Planning Meeting Milestones

See paragraph TURNOVER AND CLOSEOUT ACTIVITIES above.

1.10.1.6.6 Substantial Completion Milestone

Include an unconstrained finish milestone on the NAS titled "Substantial Completion." Substantial Completion is defined as the point in time the Government would consider the project ready for beneficial occupancy wherein by mutual agreement of the Government and Contractor, Government use of the facility is allowed while construction access continues in order to complete remaining items (e.g., punch list and other close out submittals). Include a separate Substantial Completion Milestone for each phase if the contract requires construction to be completed in phases.

1.10.1.6.7 DD-1354 Finish Milestone

Add unconstrained finish milestone, titled "DD-1354" and scheduled 30 calendar days prior to Substantial Completion, whenever a Form DD-1354 is required in accordance with Section 01 20 00 PRICE AND PAYMENT PROCEDURES. Include a separate DD-1354 Finish Milestone for each phase if the contract requires construction to be completed in phases.

1.10.1.6.8 Project Completion Milestone

Include an unconstrained finish milestone on the NAS titled "Project Completion." Project Completion is defined as the point in time all contract requirements are complete and verified by the Government with a successful Final Inspection in accordance with Section 01 45 00 QUALITY CONTROL. This milestone must have the Contract Completion Date (CCD) milestone as its only successor.

1.10.1.6.9 Contract Completion Date (CCD) Milestone

Last NAS entry must be an unconstrained finish milestone titled "Contract Completion (CCD: DD-MM-YY)." DD-MM-YYYY is the current contract completion date at data date, day-month-year corresponding to P6 Must Finish By Date. NAS milestone updates of Project Completion finish date for longest path must reflect calculated float as positive or negative based on CCD. Calculation of NAS updates must be such that if the finish of the "Project Completion" milestone falls after the contract completion date, then negative float is calculated on the longest path. If the finish of the "Project Completion" milestone falls before the contract completion date, the float calculation must reflect positive float on the longest path.

1.10.1.6.10 Additional Milestones

Provide up to five additional milestones as required by Contracting Officer.

1.10.1.7 Work Breakdown Structure & Activity Code

At a minimum, establish a Work Breakdown Structure (WBS) and provide activity codes identified as follows:

1.10.1.7.1 Work Breakdown Structure (WBS)

Group all activities and milestones within appropriate WBS elements/levels including, at a minimum, the following:

a. Project Milestones:

(1) Management Milestones

(2) Project Administrative Meetings

(3) Permits

b. Pre-Construction Phase:

(1) Submittals and Reviews

(2) Procurement

(3) Mobilization

c. Construction Phase: Create multiple elements/levels in accordance with project specific definable features of work including in WBS descending order as follows:

(1) General Area

(a) Type of Work Item

1. Location

d. Project Closeout: Include activity items such as, but not limited to, Punchlist, Demobilization, O&M, As-built Drawings, Training, and As-built NAS.

e. Modifications: Create Conformed and Non-Conformed elements/levels under Modification WBS. Create multiple elements/levels as the project progresses identified by issue and Fragnet placed in Conformed for modifications issued prior data date, or Non-Conformed for issues not modified to contract prior data date.

f. Removed Activity: Activity is "removed" by remaining within logic sequence, eliminating duration and adding "(NO LONGER REQUIRED)" after Activity Name in Activity Table.

1.10.1.7.2 Responsibility Code

Use "RESP" for Activity Code Name. All activities in the project NAS must be identified with the resource, including business name, for completing

the task. Activities must not belong to more than one responsible party.

1.10.1.7.3 Activity Category Code

Use "CAT" for Activity Code Name for the following Project Level activity codes:

a. Assign "PROC" value to Procurement type activity

b. Assign "PRE-CON" value to Pre-construction activity

c. Assign "CONS" value to Construction type activity

d. Assign "TEST" value to dedicated testing type activities

e. Assign "CX" value to dedicated Commissioning type activities

f. Assign "CLOS" value to dedicated Close Out type activity

g. Assign "OTHR" to other activity not otherwise designated

1.10.1.7.4 Additional Activity Codes

Provide up to an additional five activity codes as required by the Contracting Officer

1.10.1.7.5 Drawing Code

Identify all activities in the project NAS with its respective Drawing Code. The Drawing Code is the Sheet Number on the primary project drawing which indicates work to be performed. If an activity does not have an applicable Drawing Code (e.g., Mobilize), the code must be "0000".

1.10.1.8 Adverse Weather Lost Work Days

Use the National Oceanic and Atmospheric Administration's (NOAA) Summary of Monthly Normals report to obtain the historical average number of days each month with precipitation, using a nominal 30-year, greater than 0.10 inch precipitation amount parameter, as indicated on the Station Report for the NOAA location closest to the project site as the basis for establishing a "Weather Calendar" showing the number of anticipated non-workdays for each month due to adverse weather, in addition to Saturdays, Sundays and all Federal Holidays as non-work days.

Assign the Weather Calendar to any activity that could be impacted by adverse weather. The Contracting Officer will issue a modification in accordance with the contract clauses, giving the Contractor a time only extension for the difference of days between the anticipated and actual adverse weather delay if the number of actual adverse weather delay days exceeds the number of days anticipated for the month in which the delay occurs and the adverse weather delayed activities are on the longest path to contract completion in the period when delay occurred. A lost workday due to weather conditions is defined as a day in which the Contractor cannot work at least 50 percent of the day on the impacted activity. Impacts resulting from adverse weather must be documented in Narrative Report for the month that it occurred.

Make changes to P6 project calendars to reflect as-built conditions where work occurred where originally anticipated as non-work days, and where

work did not occur (lost work day).

1.10.1.9 Cost Loading

The Project Network Analysis Schedule (NAS) must be cost-loaded and will provide the basis for progress payments. Earned Value Reports must be derived from and correspond to cost loaded NAS. Use the Critical Path Method (CPM) and the Precedence Diagram Method (PDM) to satisfy time and cost applications.

Sum of all costs assigned to activities must equal the current contract value as of the data date of the baseline or update NAS. Activity cost loading must be without front-end loading. Provide additional documentation if requested by the Contracting Officer.

1.10.1.9.1 Cost Loading Activities

a. Cost load construction activities. Define construction activities as on-site work activities that can be traced directly to the construction, alteration, demolition, repair of a project facility, infrastructure, or sitework.

b. Assign costs for materials which payment will be requested in advance of installation, including their quantities, to their respective procurement activities that were approved by the Contracting Officer. Assign labor costs, including their quantities, for material and equipment paid for after installation to their respective construction activities.

c. Costs for mobilization will not be paid as individual pay items with the exception of batch plant set-up, mobilization of dredging equipment or other similar labor-intensive situations. If payment for mobilization costs are approved, assign costs for demobilization activities. The value of demobilization activities must not be less than 40 percent of the total costs for mobilization activities. If not approved as a separate line item, evenly disperse over construction activities the costs for mobilization and demobilization.

d. The value of commissioning, testing, and closeout WBS section may not be less than 10 percent of the total costs for procurement and construction activities.

e. ALL activities assigned Government responsibility will have Zero Cost. No contractor cost should be assigned to an activity designated as a Government responsibility.

f. Do not include field overhead positions as individual cost loaded activities. Evenly disperse non-construction costs (e.g., meetings, presentations, submittals, surveys, haul road or storage yard maintenance, dust control, security) and profit to construction activities assigned to the Construction Phase WBS level.

g. If assigning resources to activities, setting for Calculate costs from units in Resources tab must be unchecked.

1.10.1.9.2 Partial Payment

Breakdown unit of measure and cost must be defined within P6 Activity Detail Expenses for partial payment of any cost loaded activity. Lump sum

cost loaded activity will not be partially paid.

1.10.2 NAS Software Settings and Restrictions

a. Activity Constraints: Date/time constraint(s), other than those required by the contract, are not allowed unless accepted by the Contracting Officer. Identify any constraints proposed and provide an explanation for the purpose of the constraint in the Narrative Report as described in paragraph REQUIRED TABULAR REPORTS.

b. Default Progress Data Disallowed: Actual Start is date work begins on activity with intent to pursue work to substantial completion. Actual Finish is date work is substantially complete to point where successor activity can begin. Actual dates on the NAS must correspond with activity dates reported on the Contractor Quality Control and Production Reports.

c. At a minimum, include the following settings and parameters in P6 NAS preparation:

(1) General: Define or establish Calendars and Activity Codes at the "Project" level, not the "Global" level.

(2) Admin Drop-Down Menu, Admin Preferences, Time Periods Tab:

(a) Set time periods for P6 to 8.0 Hours/Day, 40.0 Hours/Week, 172.0 Hours/Month and 2000.0 Hours/Year.

(b) Use assigned calendar to specify the number of work hours for each time period: Must be checked.

(3) Admin Drop-Down Menu, Admin Preferences, Earned Value Tab:

(a) Technique for computing performance percent complete: Use "Activity percent Complete"

(b) Technique for computing Estimate to Complete: Use "PF = 1".

(c) Earned Value Calculation: Use "Budgeted values with current dates".

(4) Project Level, Dates Tab:

(a) Set "Must Finish By" date to "Contract Completion Date", and set "Must Finish By" time to 05:00pm.

(5) Project Level, Defaults Tab:

(a) Duration Type: Set to "Fixed Duration & Units".

(b) Percent Complete Type: Set to "Physical".

(c) Activity Type: Set to "Task Dependent".

(d) Calendar: Set to "Standard 5 Day Workweek". Calendar must reflect Saturday, Sunday and all Federal holidays as non-work days. Alternative calendars may be used with Contracting Officer approval.

(6) Project Level, Calculations Tab:

(a) Default Price/Unit for activities without resource or role Price/Units: Set to "$1/h".

(b) Activity percent complete based on activity steps: Must be Checked.

(c) Link Budget and At Completion for not started activities: Must be Checked.

(d) Reset Remaining Duration and Units to Original: Must be Selected.

(e) Subtract Actual from At Completion: Must be Selected.

(f) Recalculate Actual units and Cost when duration percent complete changes: Must be Checked.

(g) Update units when costs change on resource assignments: Must be Unchecked.

(h) Link Actual to Date and Actual This Period Units and Cost: Must be Checked.

(7) Project Level, Settings Tab:

(a) Define Critical Activities: Check "Longest Path".

(8) Work Breakdown Structure Level, Earned Value Tab:

(a) Technique for Computing Performance Percent Complete: "Activity percent complete" is selected.

(b) Technique for Computing Estimate to Complete (ETC): "PF = 1" is selected.

1.10.3 Required Tabular Reports and Native P6 XER Files

Include the following reports with the Baseline, Monthly Update and any other required NAS submittals:

a. Time Scaled Logic NAS

Provide formatted 11 by 17-inch Time-scaled Logic NAS in color and landscape-oriented with each NAS submittal. Clearly show activities on the longest path setting Gantt chart longest path activity bars to red. Group activities by WBS and sort by finish date in ascending order. Include the following information in column form for each activity and include accompanying Gantt chart:

(1) Activity ID

(2) Activity Name

(3) Original Duration

(4) Remaining duration

(5) Physical Percent Complete

(6) Start Date

(7) Finish Date

(8) Total Float

(9) Project-level Calendar

b. Previous Monthly Update Comparison Time Scaled Logic NAS (Submit with all Monthly NAS Update Submittals.)

Provide formatted 11 by 17-inch Time-scaled Logic NAS in color and landscape-oriented with each monthly NAS update submittal. Clearly show activities on the current month longest path setting Gantt chart longest path activities bars to red. Show previous month activities as yellow bars and previous month milestones in yellow within Gantt chart. Sort by finish date in ascending order. Filter activities for longest path. Maintain and assign the accepted previous monthly NAS update or the accepted baseline NAS for the first update submittal as the baseline and primary baseline in P6 before printing the NAS. Include the following information in column form for each activity and include accompanying Gantt chart:

(1) Activity ID

(2) Activity Name

(3) Original Duration

(4) Current Month Remaining Duration

(5) Current Month Start Date

(6) Previous Month Update Start Date (BL Project Start)

(7) Start Date Delta between Current Month and Previous Month (Variance - BL Project Start Date)

(8) Current Month Finish Date

(9) Previous Month Finish Date (BL Project Finish)

(10) Finish Date Delta between Current Month and Previous Month (Variance - BL Project Start Date)

(11) Current Month Total Float

c. P6 native XER file: Include the back-up native .xer program file compatible with the current Government version of Primavera P6. Each native NAS file must have a unique file name to include project name and data date using (yyyy-mm-dd) convention. Each native NAS must have a unique Project ID and Project Name.

d. Log Report: P6 Scheduling/Leveling Report.

e. Narrative Report: Identify and justify:

Each entry in the Narrative Report must cite the respective Activity ID and Activity Name, the date and reason for any changes, and description of the change.

(1) Provide Project Summary Data in format below:

(a) Data Date _____

(b) Award Date: _____

(c) Original Project Duration: _____ days post Award Date

(d) Current Project Duration: _____ days post Award Date

(e) Time percent elapsed: _____ percent at data date

(f) Original CCD: _____

(g) Current CCD: _____ (thru MOD _____)

(h) Anticipated CCD: _____ (___ calendar days early/late)

(i) Original Contract Value: $_____

(j) Current Contract Value: $_____

(k) Invoiced Amount: $_____ (____ percent)

(l) Cost Growth: ____ percent

(m) NAS Growth: ____ percent

(n) There are a total of _____ activities, _____ activities complete (____ percent), ____ activities in progress (____ percent), _____ activities not started (____ percent). Of the in progress and not started activities; ____ (____ percent) are on the longest path. The longest path has duration of _____ calendar days from data-date to anticipated project completion.

(2) Progress made in each area of the project;

(3) Longest Path;

(4) Date/time constraint(s), other than those required by the contract

(5) Listing of all changes made between the previous monthly NAS update and current monthly NAS update include as a minimum: added or deleted activities, original and remaining durations for activities that have not started, logic (sequence constraint lag/lead), milestones, planned sequence of operations, longest path, calendars or calendar assignments, and cost loading. Identify any other changes that relate to calculations within Oracle Primavera P6;

(6) Any decrease in previously reported activity Earned Amount;

(7) Pending items and status thereof, including permits, changes

orders, and time extensions;

(8) Status of Contract Completion Date and interim milestones;

(9) Status of Projected Completion Milestone and account of difference in calendar days between previous update Projected Completion Milestone

(10) Current and anticipated delays listing Activity Names and IDs for impacted activities(describe cause of delay and corrective actions(s) and mitigation measures to minimize);

(11) Description of current and potential future NAS problem areas.

(12) Identification of any weather and restricted lost time as compared to anticipated weather for the month and anticipated restricted days for which the update is submitted. Impacts resulting from adverse weather must be documented in tabular form showing the calendar month (or billing period) with the days on which construction activity incurred Lost Work Days due to adverse weather. In narrative form, describe the adverse weather cause such as precipitation measurement, temperature, wind or other influencing factors, and why work was impacted. Identify the construction activity(s) by ID and Name that was (were) scheduled, impacted.

f. Earned Value Report: Derive from and correspond to P6 cost loaded Monthly NAS Update. List all activities having a budget amount cost loaded. Compile total earnings on the project from notice to proceed to current progress payment request. Show on the report for each activity:

(1) Current budget;

(2) Previous Physical Percent Complete;

(3) To-Date Physical Percent Complete;

(4) Previous Earned Value;

(5) To-Date Earned Value;

(6) Cost This Period;

(7) Cost to Complete.

g. Schedule Variance Control (SVC) Diagram: With each NAS submission, provide a SVC diagram representing only the current file showing 1) A Cash Flow Curve indicating planned project cost based on each of projected early and projected late activity finish dates and 2) one curve for Earned Value to-date. Revise Cash Flow Curves when the contract is modified, or as directed by the Contracting Officer Include a legend on report clearly indication 3 curves: early finish, late finish, and earned-value to date.

Use the following settings in Activity Usage Profile Options:

(1) In the Data section, under Display, the radio box for Cost must be selected.

(2) In the Data section, under Filter for Bars/Graphs, the checkbox for Total must be checked.

(3) In the Show Bars/Curves section:

(a) Under the By Date column, the checkboxes for Baseline, Actual and Remaining Late must be checked. The checkboxes for Budgeted and Remaining Early must be unchecked.

(b) Under the Cumulative column, the checkboxes for Baseline, Actual and Remaining Late must be checked. The checkboxes for Budgeted and Remaining Early must be unchecked.

(c) Set the color for Baseline to green.

(d) Set the color for Actual to blue.

(e) Set the color for Remaining Late to red.

(4) In the Show Earned Value Curves section, the checkboxes for Planned Value Cost, Earned Value Cost and Estimate at Completion must be unchecked.

h. Logic Diagram showing timescale from data date to 60 days after data date with filter for longest path. Leave Group By selection blank and sort by finish date in ascending order.

i. Logic Diagram showing timescale from data date to contract completion date with filter for longest path. Leave Group By selection blank and sort by finish date in ascending order.

j. Baseline or Monthly Update Checklist as applicable completed and certified by Qualified Scheduler. Contractor Baseline Project Schedule Review, Contractor Monthly Update Schedule Review, and Contractor Baseline Project Schedule, and General Commissioning/HVAC Review Checklist. Checklists can be found on the Whole Building Design Guide website as Related Materials to UFGS 01 32 17.00 20.

k. Screen shot PDF of Primavera P6 Time Periods Settings referenced in paragraph NAS SOFTWARE SETTINGS AND RESTRICTIONS, list item c.(2): ADMIN DROP-DOWN MENU, ADMIN PREFERENCES, TIME PERIODS TAB

l. Screen shot PDF of Primavera P6 Earned Value Settings referenced in paragraph NAS SOFTWARE SETTINGS AND RESTRICTIONS, list item c.(3): ADMIN DROP-DOWN MENU, ADMIN PREFERENCES, EARNED VALUE TAB

m. Daily Reported Production Activity: Submit on a monthly basis, in electronic spreadsheet, summary of daily reported production activity for the reporting month in the update NAS. Use the following columns for reporting:

(1) Date

(2) Activity ID

(3) Work Description

(4) Contractor

(5) Billable Hours

1.11 CONTRACT MODIFICATION

1.11.1 Time Impact Analysis (TIA)

Submit a Time Impact Analysis with each cost and time proposal for a proposed change. TIA must illustrate the influence of each change or delay on the Contract Completion Date or milestones. No time extensions will be granted nor delay damages paid unless a delay occurs which consumes all available Project Float, impacts the longest path, and extends the Projected Completion beyond the Contract Completion Date.

a. Each TIA must be in both narrative and NAS form. The narrative must:

(1) Define the scope and conditions of the change;

(2) Provide start and finish dates of impact to longest path;

(3) Identify and include any accepted NAS referenced in TIA and any changes made to accepted NAS to prepare additional NAS included in the TIA;

(4) Successor(s) and predecessor(s) activities to impact period;

(5) Responsible party;

(6) Describe how the impact originated;

b. The TIA submission must consist of at least three native XER files:

(1) Fragnet used to define the scope of the changed condition

(2) Most recent accepted baseline NAS or monthly NAS update as of the time of the impact start date. If the data date of this NAS is different than the start date of impact, update this NAS to show all activity progress as of the time of the impact start. The impact start date is identified as the time when an existing activity is impeded for either starting or finishing. This NAS must have a data date that is the same as the identified start date of impact in "a.(2)". Identify any changes made to most recent accepted NAS.

(3) The impacted NAS that has the Fragnet inserted in the updated NAS from "b.(2)" and the NAS scheduled using the Schedule command in Oracle Primavera P6 so that the new completion date is determined.

c. For claimed as-built project delay, the inserted Fragnet TIA method must be modified to account for as-built events known to occur after the data date of NAS update used. Updated NAS for periods following the impact start date will be used and included in submittal to evaluate how the project progressed (as-built) through the finish of impact. Impact to longest path must be determined for each following update period.

d. All TIAs must include any mitigation, and must determine the apportionment of the overall delay assignable to each individual

delay. Apportionment must provide identification of delay type and classification of delay by compensable and non-compensable events. The associated narrative must clearly describe analysis methodology used, and the findings in a chronological listing beginning with the earliest delay event.

(1) Identify and classify types of delay defined as follows:

(a) Force majeure delay (e.g., weather delay): Any delay event caused by something or someone other than the Government or the Contractor, or the risk of which has not been assigned solely to the Government or the Contractor. If the force majeure delay is on the longest path, in absence of other types of concurrent delays, the Contractor is granted an extension of contract time, classified as a non-compensable event.

(b) A Contractor-delay: Any delay event caused by the Contractor, or the risk of which has been assigned solely to the Contractor. If the contractor-delay is on the longest path, in absence of other types of concurrent delays, Contractor is not granted extension of contract time, and classified as a non-compensable event. Where absent other types of delays, and having impact to project completion, Contractor must provide to Contracting Officer a Corrective Action Plan identifying plan to mitigate delay.

(c) A Government-delay: Any delay event caused by the Government, or the risk of which has been assigned solely to the Government. If the Government-delay is on the longest path, in absence of other types of concurrent delays, the Contractor is granted an extension of contract time, and classified as a compensable event.

(2) Functional concurrency must be used to analyze concurrent delays, where: separate delay issues delay project completion, do not necessarily occur at same time, rather occur within same monthly NAS update period at minimum, or within same as-built period under review. If a combination of functionally concurrent delay types occurs, it is considered Concurrent Delay, which is defined in the following combinations:

(a) Government-delay concurrent with contractor-delay: excusable time extension, classified non-compensable event.

(b) Government-delay concurrent with force majeure delay: excusable time extension, classified non-compensable event.

(c) Contractor-delay concurrent with force majeure delay: excusable time extension, classified non-compensable event.

(3) Pacing delay reacting to another delay (parent delay) equally or more critical than paced activity must be identified prior to pacing. Contracting Officer will notify Contractor prior to pacing. Contractor must notify Contracting Officer prior to pacing. Notification must include identification of parent delay issue, estimated parent delay time period, paced activity(s) identity, and pacing reason(s). Pacing Concurrency is defined as follows:

(a) Government-delay concurrent with contractor-pacing: excusable time extension, classified compensable event.

(b) Contractor-delay concurrent with Government-pacing: inexcusable time extension, classified non-compensable event

e. Submit electronic files containing the narrative and the Native XER NAS files used and or referenced in the time impact analysis.

1.12 PROJECT FLOAT

Project Float is the length of time between the Project Completion Milestone and the Contract Completion Date. Project Float available in the NAS will not be for the exclusive use of either the Government or the Contractor.

The use of Resource Leveling is prohibited. Techniques used for the purpose of artificially adjusting activity durations to consume float and influence longest path are prohibited.

PART 2 PRODUCTS

Not used.

PART 3 EXECUTION

Not used.

-- End of Section --

THIS PAGE INTENTIONALLY LEFT BLANK

SECTION 01 33 00

SUBMITTAL PROCEDURES
08/18, CHG 4: 02/21

PART 1 GENERAL

1.1 DEFINITIONS

1.1.1 Submittal Descriptions (SD)

Submittal requirements are specified in the technical sections. Examples and descriptions of submittals identified by the Submittal Description (SD) numbers and titles follow:

SD-01 Preconstruction Submittals

Submittals that are required prior to or commencing with the start of work on site.

Preconstruction Submittals include schedules and a tabular list of locations, features, and other pertinent information regarding products, materials, equipment, or components to be used in the work.

Certificates Of Insurance

Surety Bonds

List Of Proposed Subcontractors

List Of Proposed Products

Baseline Network Analysis Schedule (NAS)

Submittal Register

Schedule Of Prices Or Earned Value Report

Accident Prevention Plan

Work Plan

Quality Control (QC) plan

Environmental Protection Plan

SD-02 Shop Drawings

Drawings, diagrams and schedules specifically prepared to illustrate some portion of the work.

Diagrams and instructions from a manufacturer or fabricator for use in producing the product and as aids to the Contractor for integrating the product or system into the project.

Drawings prepared by or for the Contractor to show how multiple systems and interdisciplinary work will be coordinated.

SD-03 Product Data

Catalog cuts, illustrations, schedules, diagrams, performance charts, instructions and brochures illustrating size, physical appearance and other characteristics of materials, systems or equipment for some portion of the work.

Samples of warranty language when the contract requires extended product warranties.

SD-05 Design Data

Design calculations, mix designs, analyses or other data pertaining to a part of work.

SD-06 Test Reports

Report signed by authorized official of testing laboratory that a material, product or system identical to the material, product or system to be provided has been tested in accord with specified requirements. Unless specified in another section, testing must have been within three years of date of contract award for the project.

Report that includes findings of a test required to be performed on an actual portion of the work or prototype prepared for the project before shipment to job site.

Report that includes finding of a test made at the job site or on sample taken from the job site, on portion of work during or after installation.

Investigation reports

Daily logs and checklists

Final acceptance test and operational test procedure

SD-07 Certificates

Statements printed on the manufacturer's letterhead and signed by responsible officials of manufacturer of product, system or material attesting that the product, system, or material meets specification requirements. Must be dated after award of project contract and clearly name the project.

Document required of Contractor, or of a manufacturer, supplier, installer or Subcontractor through Contractor. The document purpose is to further promote the orderly progression of a portion of the work by documenting procedures, acceptability of methods, or personnel qualifications.

Confined space entry permits

Text of posted operating instructions

SD-08 Manufacturer's Instructions

Preprinted material describing installation of a product, system or material, including special notices and Safety Data

Sheets(SDS)concerning impedances, hazards and safety precautions.

SD-11 Closeout Submittals

Documentation to record compliance with technical or administrative requirements or to establish an administrative mechanism.

Submittals required for Guiding Principle Validation (GPV) or Third Party Certification (TPC).

Special requirements necessary to properly close out a construction contract. For example, Record Drawings and as-built drawings. Also, submittal requirements necessary to properly close out a major phase of construction on a multi-phase contract.

1.1.2 Approving Authority

Office or designated person authorized to approve the submittal.

1.1.3 Work

As used in this section, on-site and off-site construction required by contract documents, including labor necessary to produce submittals, construction, materials, products, equipment, and systems incorporated or to be incorporated in such construction. In exception, excludes work to produce SD-01 submittals.

1.2 SUBMITTALS

Government approval is required for submittals with a "G" classification. Submittals not having a "G" classification are for Contractor Quality Control approval. Submit the following in accordance with Section 01 33 00 SUBMITTAL PROCEDURES:

SD-01 Preconstruction Submittals

Submittal Register; G

1.3 SUBMITTAL CLASSIFICATION

1.3.1 Government Approved (G)

Government approval is required for extensions of design, critical materials, variations, equipment whose compatibility with the entire system must be checked, and other items as designated by the Government.

Within the terms of the Contract Clause SPECIFICATIONS AND DRAWINGS FOR CONSTRUCTION, submittals are considered to be "shop drawings."

1.3.2 For Information Only

Submittals not requiring Government approval will be for information only. Within the terms of the Contract Clause SPECIFICATIONS AND DRAWINGS FOR CONSTRUCTION, they are not considered to be "shop drawings."

1.4 FORWARDING SUBMITTALS REQUIRING GOVERNMENT APPROVAL

As soon as practicable after award of contract, and before procurement or fabrication, forward to the Commander, NAVFAC, Code CI4,

Architect-Engineer: submittals required in the technical sections of this specification, including shop drawings, product data and samples. In addition, forward a copy of the submittals to the Contracting Officer.

1.4.1 O&M Data

Submit data specified for a given item within 30 calendar days after the item is delivered to the contract site.

In the event the Contractor fails to deliver O&M data within the time limits specified, the Contracting Officer may withhold from progress payments 50 percent of the price of the items to which such O&M data apply.

1.5 PREPARATION

1.5.1 Transmittal Form

Transmit each submittal, except sample installations and sample panels to the office of the approving authority using the transmittal form prescribed by the Contracting Officer. Include all information prescribed by the transmittal form and required in paragraph IDENTIFYING SUBMITTALS. Use the submittal transmittal forms to record actions regarding samples.

1.5.2 Identifying Submittals

The Contractor's Quality Control Manager must prepare, review and stamp submittals, including those provided by a subcontractor, before submittal to the Government.

Identify submittals, except sample installations and sample panels, with the following information permanently adhered to or noted on each separate component of each submittal and noted on transmittal form. Mark each copy of each submittal identically, with the following:

a. Project title and location

b. Construction contract number

c. Dates of the drawings and revisions

d. Name, address, and telephone number of Subcontractor, supplier, manufacturer, and any other Subcontractor associated with the submittal.

e. Section number of the specification by which submittal is required

f. Submittal description (SD) number of each component of submittal

g. For a resubmission, add alphabetic suffix on submittal description, for example, submittal 18 would become 18A, to indicate resubmission

h. Product identification and location in project.

1.5.3 Submittal Format

1.5.3.1 Format of SD-01 Preconstruction Submittals

When the submittal includes a document that is to be used in the project, or is to become part of the project record, other than as a submittal, do

not apply the Contractor's approval stamp to the document itself, but to a separate sheet accompanying the document.

Provide data in the unit of measure used in the contract documents.

1.5.3.2 Format for SD-02 Shop Drawings

Provide shop drawings not less than 8 1/2 by 11 inches nor more than 30 by 42 inches, except for full-size patterns or templates. Prepare drawings to accurate size, with scale indicated, unless another form is required. Ensure drawings are suitable for reproduction and of a quality to produce clear, distinct lines and letters, with dark lines on a white background.

a. Include the nameplate data, size, and capacity on drawings. Also include applicable federal, military, industry, and technical society publication references.

b. Dimension drawings, except diagrams and schematic drawings. Prepare drawings demonstrating interface with other trades to scale. Use the same unit of measure for shop drawings as indicated on the contract drawings. Identify materials and products for work shown.

Present shop drawings sized 8 1/2 by 11 inches as part of the bound volume for submittals. Present larger drawings in sets. Submit an electronic copy of drawings in PDF format and native electronic format.

1.5.3.2.1 Drawing Identification

Include on each drawing the drawing title, number, date, and revision numbers and dates, in addition to information required in paragraph IDENTIFYING SUBMITTALS.

Number drawings in a logical sequence. Each drawing is to bear the number of the submittal in a uniform location next to the title block. Place the Government contract number in the margin, immediately below the title block, for each drawing.

Reserve a blank space, no smaller than 3 inches on the right-hand side of each sheet for the Government disposition stamp.

1.5.3.3 Format of SD-03 Product Data

Present product data submittals for each section as a complete, bound volume. Include a table of contents, listing the page and catalog item numbers for product data.

Indicate, by prominent notation, each product that is being submitted; indicate the specification section number and paragraph number to which it pertains.

1.5.3.3.1 Product Information

Supplement product data with material prepared for the project to satisfy the submittal requirements where product data does not exist. Identify this material as developed specifically for the project, with information and format as required for submission of SD-07 Certificates.

Provide product data in units used in the Contract documents. Where product data are included in preprinted catalogs with another unit, submit

the dimensions in contract document units, on a separate sheet.

1.5.3.3.2 Standards

Where equipment or materials are specified to conform to industry or technical-society reference standards of such organizations as the American National Standards Institute (ANSI), ASTM International (ASTM), National Electrical Manufacturer's Association (NEMA), Underwriters Laboratories (UL), or Association of Edison Illuminating Companies (AEIC), submit proof of such compliance. The label or listing by the specified organization will be acceptable evidence of compliance. In lieu of the label or listing, submit a certificate from an independent testing organization, competent to perform testing, and approved by the Contracting Officer. State on the certificate that the item has been tested in accordance with the specified organization's test methods and that the item complies with the specified organization's reference standard.

1.5.3.3.3 Data Submission

Collect required data submittals for each specific material, product, unit of work, or system into a single submittal that is marked for choices, options, and portions applicable to the submittal. Mark each copy of the product data identically. Partial submittals will not be accepted for expedition of the construction effort.

Submit the manufacturer's instructions before installation.

1.5.3.4 Format of SD-04 Samples

1.5.3.4.1 Sample Characteristics

Furnish samples in the following sizes, unless otherwise specified or unless the manufacturer has prepackaged samples of approximately the same size as specified:

a. Sample of Equipment or Device: Full size.

b. Sample of Materials Less Than 2 by 3 inches: Built up to 8 1/2 by 11 inches.

c. Sample of Materials Exceeding 8 1/2 by 11 inches: Cut down to 8 1/2 by 11 inches and adequate to indicate color, texture, and material variations.

d. Sample of Linear Devices or Materials: 10 inch length or length to be supplied, if less than 10 inches. Examples of linear devices or materials are conduit and handrails.

e. Sample Volume of Nonsolid Materials: Pint. Examples of nonsolid materials are sand and paint.

f. Color Selection Samples: 2 by 4 inches. Where samples are specified for selection of color, finish, pattern, or texture, submit the full set of available choices for the material or product specified. Sizes and quantities of samples are to represent their respective standard unit.

g. Sample Panel: 4 by 4 feet.

h. Sample Installation: 100 square feet.

1.5.3.4.2 Sample Incorporation

Reusable Samples: Incorporate returned samples into work only if so specified or indicated. Incorporated samples are to be in undamaged condition at the time of use.

Recording of Sample Installation: Note and preserve the notation of any area constituting a sample installation, but remove the notation at the final clean-up of the project.

1.5.3.4.3 Comparison Sample

Samples Showing Range of Variation: Where variations in color, finish, pattern, or texture are unavoidable due to nature of the materials, submit sets of samples of not less than three units showing extremes and middle of range. Mark each unit to describe its relation to the range of the variation.

When color, texture, or pattern is specified by naming a particular manufacturer and style, include one sample of that manufacturer and style, for comparison.

1.5.3.5 Format of SD-05 Design Data

Provide design data and certificates on 8 1/2 by 11 inch paper. Provide a bound volume for submittals containing numerous pages.

1.5.3.6 Format of SD-06 Test Reports

Provide reports on 8 1/2 by 11 inch paper in a complete bound volume.

By prominent notation, indicate each report in the submittal. Indicate the specification number and paragraph number to which each report pertains.

1.5.3.7 Format of SD-07 Certificates

Provide design data and certificates on 8 1/2 by 11 inch paper. Provide a bound volume for submittals containing numerous pages.

1.5.3.8 Format of SD-08 Manufacturer's Instructions

Present manufacturer's instructions submittals for each section as a complete, bound volume. Include the manufacturer's name, trade name, place of manufacture, and catalog model or number on product data. Also include applicable federal, military, industry, and technical-society publication references. If supplemental information is needed to clarify the manufacturer's data, submit it as specified for SD-07 Certificates.

Submit the manufacturer's instructions before installation.

1.5.3.8.1 Standards

Where equipment or materials are specified to conform to industry or technical-society reference standards of such organizations as the American National Standards Institute (ANSI), ASTM International (ASTM),

National Electrical Manufacturer's Association (NEMA), Underwriters Laboratories (UL), or Association of Edison Illuminating Companies (AEIC), submit proof of such compliance. The label or listing by the specified organization will be acceptable evidence of compliance. In lieu of the label or listing, submit a certificate from an independent testing organization, competent to perform testing, and approved by the Contracting Officer. State on the certificate that the item has been tested in accordance with the specified organization's test methods and that the item complies with the specified organization's reference standard.

1.5.3.9 Format of SD-09 Manufacturer's Field Reports

Provide reports on 8 1/2 by 11 inch paper in a complete bound volume.

By prominent notation, indicate each report in the submittal. Indicate the specification number and paragraph number to which each report pertains.

1.5.3.10 Format of SD-11 Closeout Submittals

When the submittal includes a document that is to be used in the project or is to become part of the project record, other than as a submittal, do not apply the Contractor's approval stamp to the document itself, but to a separate sheet accompanying the document.

Provide data in the unit of measure used in the contract documents.

1.5.4 Source Drawings for Shop Drawings

1.5.4.1 Source Drawings

The entire set of source drawing files (DWG) will not be provided to the Contractor. Request the specific Drawing Number for the preparation of shop drawings. Only those drawings requested to prepare shop drawings will be provided. These drawings are provided only after award.

1.5.4.2 Terms and Conditions

Data contained on these electronic files must not be used for any purpose other than as a convenience in the preparation of construction data for the referenced project. Any other use or reuse is at the sole risk of the Contractor and without liability or legal exposure to the Government. The Contractor must make no claim, and waives to the fullest extent permitted by law any claim or cause of action of any nature against the Government, its agents, or its subconsultants that may arise out of or in connection with the use of these electronic files. The Contractor must, to the fullest extent permitted by law, indemnify and hold the Government harmless against all damages, liabilities, or costs, including reasonable attorney's fees and defense costs, arising out of or resulting from the use of these electronic files.

These electronic source drawing files are not construction documents. Differences may exist between the source drawing files and the corresponding construction documents. The Government makes no representation regarding the accuracy or completeness of the electronic source drawing files, nor does it make representation to the compatibility of these files with the Contractor hardware or software. The Contractor is responsible for determining if any conflict exists. In the event that

a conflict arises between the signed and sealed construction documents prepared by the Government and the furnished source drawing files, the signed and sealed construction documents govern. Use of these source drawing files does not relieve the Contractor of the duty to fully comply with the contract documents, including and without limitation the need to check, confirm and coordinate the work of all contractors for the project. If the Contractor uses, duplicates or modifies these electronic source drawing files for use in producing construction data related to this contract, remove all previous indication of ownership (seals, logos, signatures, initials and dates).

1.5.5 Electronic File Format

Provide submittals in electronic format, with the exception of material samples required for SD-04 Samples items. In addition to the electronic submittal, provide three hard copies of the submittals. Compile the submittal file as a single, complete document, to include the Transmittal Form described within, and also separately attach the native files which were used to create PDF. The attached files should include the original digital files used to create the submittal. Name the electronic submittal file specifically according to its contents, and coordinate the file naming convention with the Contracting Officer. Electronic files must be of sufficient quality that all information is legible. Use PDF as the electronic format, unless otherwise specified or directed by the Contracting Officer. Generate PDF files from original documents with bookmarks so that the text included in the PDF file is searchable and can be copied. If documents are scanned, optical character resolution (OCR) routines are required. Index and bookmark files exceeding 30 pages to allow efficient navigation of the file. When required, the electronic file must include a valid electronic signature or a scan of a signature.

E-mail electronic submittal documents smaller than 10MB to an e-mail address as directed by the Contracting Officer. Provide electronic documents over 10 MB on an optical disc or through an electronic file sharing system such as the DOD SAFE Web Application located at the following website: https://safe.apps.mil/.

1.6 QUANTITY OF SUBMITTALS

1.6.1 Number of SD-01 Preconstruction Submittal Copies

Unless otherwise specified, submit two sets of administrative submittals.

1.6.2 Number of SD-02 Shop Drawing Copies

Submit six copies of submittals of shop drawings requiring review and approval by a QC organization. Submit seven copies of shop drawings requiring review and approval by the Contracting Officer.

1.6.3 Number of SD-03 Product Data Copies

Submit in compliance with quantity requirements specified for shop drawings.

1.6.4 Number of SD-04 Samples

a. Submit one sample. One approved sample or set of samples will be retained by the approving authority .

b. Submit one sample panel or provide one sample installation where directed. Include components listed in the technical section or as directed.

c. Submit one sample installation, where directed.

d. Submit one sample of nonsolid materials.

1.6.5 Number of SD-05 Design Data Copies

Submit in compliance with quantity requirements specified for shop drawings.

1.6.6 Number of SD-06 Test Report Copies

Submit in compliance with quantity and quality requirements specified for shop drawings, other than field test results that will be submitted with QC reports.

1.6.7 Number of SD-07 Certificate Copies

Submit in compliance with quantity requirements specified for shop drawings.

1.6.8 Number of SD-08 Manufacturer's Instructions Copies

Submit in compliance with quantity requirements specified for shop drawings.

1.6.9 Number of SD-09 Manufacturer's Field Report Copies

Submit in compliance with quantity and quality requirements specified for shop drawings other than field test results that will be submitted with QC reports.

1.6.10 Number of SD-10 Operation and Maintenance Data Copies

Submit three copies of O&M data to the Contracting Officer for review and approval.

1.6.11 Number of SD-11 Closeout Submittals Copies

Unless otherwise specified, submit two sets of administrative submittals.

1.7 INFORMATION ONLY SUBMITTALS

Submittals without a "G" designation must be certified by the QC manager and submitted to the Contracting Officer for information-only. Provide information-only submittals to the Contracting Officer a minimum of 14 calendar days prior to the Preparatory Meeting for the associated Definable Feature of Work (DFOW). Approval of the Contracting Officer is not required on information only submittals. The Contracting Officer will mark "receipt acknowledged" on submittals for information and will return only the transmittal cover sheet to the Contractor. Normally, submittals for information only will not be returned. However, the Government reserves the right to return unsatisfactory submittals and require the Contractor to resubmit any item found not to comply with the contract. This does not relieve the Contractor from the obligation to furnish material conforming to the plans and specifications; will not prevent the

Contracting Officer from requiring removal and replacement of nonconforming material incorporated in the work; and does not relieve the Contractor of the requirement to furnish samples for testing by the Government laboratory or for check testing by the Government in those instances where the technical specifications so prescribe.

1.8 PROJECT SUBMITTAL REGISTER

A sample Project Submittal Register showing items of equipment and materials for when submittals are required by the specifications is provided as "Attachment A - Submittal Register."

1.8.1 Submittal Management

Prepare and maintain a submittal register, as the work progresses. Do not change data that is output in columns (c), (d), (e), and (f) as delivered by Government; retain data that is output in columns (a), (g), (h), and (i) as approved. As an attachment, provide a submittal register showing items of equipment and materials for which submittals are required by the specifications. This list may not be all-inclusive and additional submittals may be required.

Column (c): Lists specification section in which submittal is required.

Column (d): Lists each submittal description (SD Number. and type, e.g., SD-02 Shop Drawings) required in each specification section.

Column (e): Lists one principal paragraph in each specification section where a material or product is specified. This listing is only to facilitate locating submitted requirements. Do not consider entries in column (e) as limiting the project requirements.

Column (f): Lists the approving authority for each submittal.

Thereafter, the Contractor is to track all submittals by maintaining a complete list, including completion of all data columns and all dates on which submittals are received by and returned by the Government.

1.8.2 Preconstruction Use of Submittal Register

Submit the submittal register. Include the QC plan and the project schedule. Verify that all submittals required for the project are listed and add missing submittals. Coordinate and complete the following fields on the register submitted with the QC plan and the project schedule:

Column (a) Activity Number: Activity number from the project schedule.

Column (g) Contractor Submit Date: Scheduled date for the approving authority to receive submittals.

Column (h) Contractor Approval Date: Date that Contractor needs approval of submittal.

Column (i) Contractor Material: Date that Contractor needs material delivered to Contractor control.

1.8.3 Contractor Use of Submittal Register

Update the following fields with each submittal throughout the contract.

Column (b) Transmittal Number: List of consecutive, Contractor-assigned numbers.

Column (j) Action Code (k): Date of action used to record Contractor's review when forwarding submittals to QC.

Column (l) Date submittal transmitted.

Column (q) Date approval was received.

1.8.4 Approving Authority Use of Submittal Register

Update the following fields:

Column (b) Transmittal Number: List of consecutive, Contractor-assigned numbers.

Column (l) Date submittal was received.

Column (m) through (p) Dates of review actions.

Column (q) Date of return to Contractor.

1.8.5 Action Codes

1.8.5.1 Government Review Action Codes

"A" - "Approved as submitted"

"AN" - "Approved as noted"

"RR" - "Disapproved as submitted"; "Completed"

"NR" - "Not Reviewed"

"RA" - "Receipt Acknowledged"

1.8.6 Delivery of Copies

Submit an updated electronic copy of the submittal register to the Contracting Officer with each invoice request. Provide an updated Submittal Register monthly regardless of whether an invoice is submitted.

1.9 VARIATIONS

Variations from contract requirements require Contracting Officer approval pursuant to contract Clause FAR 52.236-21 Specifications and Drawings for Construction, and will be considered where advantageous to the Government.

1.9.1 Considering Variations

Discussion of variations with the Contracting Officer before submission will help ensure that functional and quality requirements are met and minimize rejections and resubmittals. For variations that include design changes or some material or product substitutions, the Government may

require an evaluation and analysis by a licensed professional engineer hired by the contractor.

Specifically point out variations from contract requirements in a transmittal letter. Failure to point out variations may cause the Government to require rejection and removal of such work at no additional cost to the Government.

1.9.2 Warranting that Variations are Compatible

When delivering a variation for approval, the Contractor warrants that this contract has been reviewed to establish that the variation, if incorporated, will be compatible with other elements of work.

1.9.3 Review Schedule Extension

In addition to the normal submittal review period, a period of 14 working days will be allowed for the Government to consider submittals with variations.

1.10 SCHEDULING

Schedule and submit concurrently product data and shop drawings covering component items forming a system or items that are interrelated. Submit pertinent certifications at the same time. No delay damages or time extensions will be allowed for time lost in late submittals. .

a. Coordinate scheduling, sequencing, preparing, and processing of submittals with performance of work so that work will not be delayed by submittal processing. The Contractor is responsible for additional time required for Government reviews resulting from required resubmittals. The review period for each resubmittal is the same as for the initial submittal.

b. Submittals required by the contract documents are listed on the submittal register. If a submittal is listed in the submittal register but does not pertain to the contract work, the Contractor is to include the submittal in the register and annotate it "N/A" with a brief explanation. Approval by the Contracting Officer does not relieve the Contractor of supplying submittals required by the contract documents but that have been omitted from the register or marked "N/A."

c. Resubmit the submittal register and annotate it monthly with actual submission and approval dates. When all items on the register have been fully approved, no further resubmittal is required.

Contracting Officer review will be completed within 10 working days after the date of submission.

d. Except as specified otherwise, allow a review period, beginning with receipt by the approving authority, that includes at least 15 working days for submittals for QC manager approval and 20 working days for submittals where the Contracting Officer is the approving authority. The period of review for submittals with Contracting Officer approval begins when the Government receives the submittal from the QC organization.

e. For submittals requiring review by a Government fire protection

engineer, allow a review period, beginning when the Government receives the submittal from the QC organization, of 30 working days for return of the submittal to the Contractor.

1.10.1 Reviewing, Certifying, and Approving Authority

The QC Manager is responsible for reviewing all submittals and certifying that they are in compliance with contract requirements. The approving authority on submittals is the QC Manager unless otherwise specified. At each "Submittal" paragraph in individual specification sections, a notation "G" following a submittal item indicates that the Contracting Officer is the approving authority for that submittal item. Provide an additional copy of the submittal to the Government Approving authority

1.10.2 Constraints

Conform to provisions of this section, unless explicitly stated otherwise for submittals listed or specified in this contract.

Submit complete submittals for each definable feature of the work. At the same time, submit components of definable features that are interrelated as a system.

When acceptability of a submittal is dependent on conditions, items, or materials included in separate subsequent submittals, the submittal will be returned without review.

Approval of a separate material, product, or component does not imply approval of the assembly in which the item functions.

1.10.3 QC Organization Responsibilities

a. Review submittals for conformance with project design concepts and compliance with contract documents.

b. Process submittals based on the approving authority indicated in the submittal register.

(1) When the QC manager is the approving authority, take appropriate action on the submittal from the possible actions defined in paragraph APPROVED SUBMITTALS.

(2) When the Contracting Officer is the approving authority or when variation has been proposed, forward the submittal to the Government, along with a certifying statement, or return the submittal marked "not reviewed" or "revise and resubmit" as appropriate. The QC organization's review of the submittal determines the appropriate action.

c. Ensure that material is clearly legible.

d. Stamp each sheet of each submittal with a QC certifying statement or an approving statement, except that data submitted in a bound volume or on one sheet printed on two sides may be stamped on the front of the first sheet only.

(1) When the approving authority is the Contracting Officer, the QC organization will certify submittals forwarded to the Contracting Officer with the following certifying statement:

"I hereby certify that the (equipment) (material) (article) shown and marked in this submittal is that proposed to be incorporated with Contract Number is in compliance with the contract drawings and specification, can be installed in the allocated spaces, and is submitted for Government approval.

Certified by Submittal Reviewer _____, Date _____
(Signature when applicable)

Certified by QC Manager _____, Date _____"
(Signature)

(2) When approving authority is the QC manager, the QC manager will use the following approval statement when returning submittals to the Contractor as "Approved" or "Approved as Noted."

"I hereby certify that the (material) (equipment) (article) shown and marked in this submittal and proposed to be incorporated with Contract Number is in compliance with the contract drawings and specification, can be installed in the allocated spaces, and is approved for use.

Certified by Submittal Reviewer _____, Date _____
(Signature when applicable)

Approved by QC Manager _____, Date _____"
(Signature)

e. Sign the certifying statement or approval statement. The QC organization member designated in the approved QC plan is the person signing certifying statements. The use of original ink for signatures is required. Stamped signatures are not acceptable.

f. Update the submittal register as submittal actions occur, and maintain the submittal register at the project site until final acceptance of all work by the Contracting Officer.

g. Retain a copy of approved submittals and approved samples at the project site.

h. For "S" submittals, provide a copy of the approved submittal to the Government Approving authority.

1.11 GOVERNMENT APPROVING AUTHORITY

When the approving authority is the Contracting Officer, the Government will:

a. Note the date on which the submittal was received from the QC manager.

b. Review submittals for approval within the scheduling period specified and only for conformance with project design concepts and compliance with contract documents.

c. Identify returned submittals with one of the actions defined in paragraph REVIEW NOTATIONS and with comments and markings appropriate for the action indicated.

Upon completion of review of submittals requiring Government approval,

stamp and date submittals. Two copies of the submittal will be retained by the Contracting Officer and two copies of the submittal will be returned to the Contractor.

1.11.1 Review Notations

Submittals will be returned to the Contractor with the following notations:

a. Submittals marked "approved" or "accepted" authorize proceeding with the work covered.

b. Submittals marked "approved as noted" or "approved, except as noted, resubmittal not required," authorize proceeding with the work covered provided that the Contractor takes no exception to the corrections.

c. Submittals marked "not approved," "disapproved," or "revise and resubmit" indicate incomplete submittal or noncompliance with the contract requirements or design concept. Resubmit with appropriate changes. Do not proceed with work for this item until the resubmittal is approved.

d. Submittals marked "not reviewed" indicate that the submittal has been previously reviewed and approved, is not required, does not have evidence of being reviewed and approved by Contractor, or is not complete. A submittal marked "not reviewed" will be returned with an explanation of the reason it is not reviewed. Resubmit submittals returned for lack of review by Contractor or for being incomplete, with appropriate action, coordination, or change.

e. Submittals marked "receipt acknowledged" indicate that submittals have been received by the Government. This applies only to "information-only submittals" as previously defined.

1.12 DISAPPROVED SUBMITTALS

Make corrections required by the Contracting Officer. If the Contractor considers any correction or notation on the returned submittals to constitute a change to the contract drawings or specifications, give notice to the Contracting Officer as required under the FAR clause titled CHANGES. The Contractor is responsible for the dimensions and design of connection details and the construction of work. Failure to point out variations may cause the Government to require rejection and removal of such work at the Contractor's expense.

If changes are necessary to submittals, make such revisions and resubmit in accordance with the procedures above. No item of work requiring a submittal change is to be accomplished until the changed submittals are approved.

1.13 APPROVED SUBMITTALS

The Contracting Officer's approval of submittals is not to be construed as a complete check, and indicates only that

Approval or acceptance by the Government for a submittal does not relieve the Contractor of the responsibility for meeting the contract requirements or for any error that may exist, because under the Quality Control (QC) requirements of this contract, the Contractor is responsible for ensuring information contained with in each submittal accurately conforms with the

requirements of the contract documents.

After submittals have been approved or accepted by the Contracting Officer, no resubmittal for the purpose of substituting materials or equipment will be considered unless accompanied by an explanation of why a substitution is necessary.

1.14 APPROVED SAMPLES

Approval of a sample is only for the characteristics or use named in such approval and is not be construed to change or modify any contract requirements. Before submitting samples, provide assurance that the materials or equipment will be available in quantities required in the project. No change or substitution will be permitted after a sample has been approved.

Match the approved samples for materials and equipment incorporated in the work. If requested, approved samples, including those that may be damaged in testing, will be returned to the Contractor, at its expense, upon completion of the contract. Unapproved samples will also be returned to the Contractor at its expense, if so requested.

Failure of any materials to pass the specified tests will be sufficient cause for refusal to consider, under this contract, any further samples of the same brand or make as that material. The Government reserves the right to disapprove any material or equipment that has previously proved unsatisfactory in service.

Samples of various materials or equipment delivered on the site or in place may be taken by the Contracting Officer for testing. Samples failing to meet contract requirements will automatically void previous approvals. Replace such materials or equipment to meet contract requirements.

PART 2 PRODUCTS

Not Used

PART 3 EXECUTION

Not Used

-- End of Section --

THIS PAGE INTENTIONALLY LEFT BLANK

CONTRACTOR'S SUBMITTAL TRANSMITTAL

CONTRACT NO:	DATE:
TRANSMITTAL/RESUBMITTAL NO.:	PREVIOUS SUBMITTAL NO (if applicable):
FROM CONTRACTOR:	PROJECT TITLE AND LOCATION:
TO:	

CONTRACTOR USE ONLY	REVIEWER USE ONLY	GOVT USE ONLY
List only one specification division per form *List only one of the following categories on each transmittal form and indicate which is being submitted* ☐ Contractor Approval ☐Govt Approval ☐ Variance Request (Govt Approval)	ACTION CODES A – Approved D – Disapproved AN – Approved As Noted ANR – Approved As Noted Resubmit NR – Not Reviewed	ACTION CODES A – Approved D – Disapproved (Revise and Resubmit) AN – Approved As Noted ANR – Approved As Noted (Resubmit) NR – Not Reviewed

ITEM	SPEC. SECT. & PARA. And/or DWG. NO.	ITEM IDENTIFICATION (Type, size, model no., Mfg. Name, drawing or brochure number)	NO. OF COPIES	RECOMMENDED ACTION	REVIEWER'S INITIALS AND DATE	ACTION	GOVERNMENT REPRESENTATIVE INITIALS, CODE AND DATE

CONTRACTOR'S CERTIFICATION AND COMMENTS: IT IS HEREBY CERTIFIED THAT THE EQUIPMENT AND/OR MATERIAL SHOWN AND MARKED IN THIS SUBMITTAL IS THAT PROPOSED TO BE INCORPORATED INTO THIS CONTRACT, IS IN COMPLIANCE WITH THE CONTRACT DRAWINGS AND SPECIFICATIONS, AND CAN BE INSTALLED IN THE ALLOCATED SPACES.	DATE RECEIVED BY REVIEWER:	DATE RECEIVED BY GOVT:
NOTE: APPROVAL BY THE GOVERNMENT OF SUBMITTED ITEMS DOES NOT RELIEVE THE CONTRACTOR FROM COMPLYING WITH ALL THE REQUIREMENTS OF THE CONTRACT PLANS AND SPECIFICATIONS	REVIEWER'S COMMENTS:	GOVT COMMENTS:
CONTRACTOR'S QC (SIGNATURE): DATE:	REVIEWER'S SIGNATURE: DATE:	GOVT REP SIGNATURE: DATE:

THIS PAGE INTENTIONALLY LEFT BLANK

SUBMITTAL REGISTER

CONTRACT NO.
1806349

TITLE AND LOCATION
Replace Underground Cabling in SP Area

CONTRACTOR

ACTIVITY NO	TRANSMITTAL NO	SPEC SECT	DESCRIPTION ITEM SUBMITTED	PARAGRAPH #	CLASSIFICATION	GOVT OR A/E REVWR	CONTRACTOR: SCHEDULE DATES			CONTRACTOR ACTION			APPROVING AUTHORITY					
							SUBMIT	APPROVAL NEEDED BY	MATERIAL NEEDED BY	ACTION CODE	DATE OF ACTION	DATE FWD TO APPR AUTH/ DATE RCD FROM CONTR	DATE FWD TO OTHER REVIEWER	DATE RCD FROM OTH REVIEWER	ACTION CODE	DATE OF ACTION	MAILED TO CONTR/ DATE RCD FRM APPR AUTH	REMARKS
(a)	(b)	(c)	(d)	(e)	(f)		(g)	(h)	(i)	(j)	(k)	(l)	(m)	(n)	(o)	(p)	(q)	(r)
		01 11 00	SD-01 Preconstruction Submittals															
			Salvage Plan	1.6	G													
		01 14 00	SD-01 Preconstruction Submittals															
			List of Contact Personnel	1.4.1.1														
		01 20 00	SD-01 Preconstruction Submittals															
			Schedule of Prices	1.3														
		01 30 00	SD-01 Preconstruction Submittals															
			View Location Map	1.3														
			Progress and Completion	1.4														
			Pictures															
		01 31 23.13 20	SD-01 Preconstruction Submittals															
			List of Contractor's Personnel	1.4.2	G													
		01 32 17.00 20	SD-01 Preconstruction Submittals															
			Baseline NAS	1.2.2	G													
			Designated Project Scheduler	1.9	G													
			SD-07 Certificates															
			Weekly Look Ahead Schedule	1.3														
			Monthly NAS Updates	1.4.2	G													
			SD-11 Closeout Submittals															
			As-Built NAS	1.4.3	G													
		01 33 00	SD-01 Preconstruction Submittals															
			Submittal Register	1.8	G													
		01 35 26	SD-01 Preconstruction Submittals															
			Accident Prevention Plan (APP)	1.9.1	G													
			SD-06 Test Reports															
			Accident Reports	1.13.2	G													

THIS PAGE INTENTIONALLY LEFT BLANK

SUBMITTAL REGISTER

CONTRACT NO. 1806349

TITLE AND LOCATION: Replace Underground Cabling in SP Area

CONTRACTOR:

ACTIVITY NO	TRANSMITTAL NO	SPEC SECT	DESCRIPTION ITEM SUBMITTED	PARAGRAPH #	CLASSIFICATION	GOVT OR A/E REVWR	CONTRACTOR: SCHEDULE DATES			CONTRACTOR ACTION			APPROVING AUTHORITY				MAILED TO CONTR/ DATE RCD FRM APPR AUTH	REMARKS
							SUBMIT	APPROVAL NEEDED BY	MATERIAL NEEDED BY	ACTION CODE	DATE OF ACTION	DATE FWD TO APPR AUTH/ DATE RCD FROM CONTR	DATE FWD TO OTHER REVIEWER	DATE RCD FROM OTH REVIEWER	ACTION CODE	DATE OF ACTION		
(a)	(b)	(c)	(d)	(e)	(f)		(g)	(h)	(i)	(j)	(k)	(l)	(m)	(n)	(o)	(p)	(q)	(r)
		01 35 26	LHE Inspection Reports	1.13.3														
			Monthly Exposure Reports	1.5	G													
			SD-07 Certificates															
			Activity Hazard Analysis (AHA)	1.10	G													
			Certificate of Compliance	1.13.4														
			Contractor Safety Self-Evaluation	1.6														
			Checklist															
			Hot Work Permit	1.14														
			Standard Lift Plan	1.13.4.2	G													
			Critical Lift Plan	1.13.4.2	G													
		01 45 00	SD-01 Preconstruction Submittals															
			Contractor Quality Control (CQC)	1.5.2	G													
			Plan															
			SD-06 Test Reports															
			Verification Statement	1.12.3														
		01 50 00	SD-01 Preconstruction Submittals															
			Construction Site Plan	1.3	G													
			Traffic Control Plan	3.3.1	G													
			Haul Road Plan	2.2.1	G													
			Contractor Computer	1.5.1.4	G													
			Cybersecurity Compliance															
			Statements															
			Contractor Temporary Network	1.5.4	G													
			Cybersecurity Compliance															
			Statements															
		01 57 19	SD-01 Preconstruction Submittals															

THIS PAGE INTENTIONALLY LEFT BLANK

SUBMITTAL REGISTER

CONTRACT NO. 1806349

TITLE AND LOCATION: Replace Underground Cabling in SP Area

CONTRACTOR:

ACTIVITY NO	TRANSMITTAL NO	SPEC SECT	DESCRIPTION ITEM SUBMITTED	PARAGRAPH #	CLASSIFICATION	GOVT OR A/E REVWR	CONTRACTOR: SCHEDULE DATES			CONTRACTOR ACTION			APPROVING AUTHORITY					REMARKS
							SUBMIT	APPROVAL NEEDED BY	MATERIAL NEEDED BY	ACTION CODE	DATE OF ACTION	DATE FWD TO APPR AUTH/ DATE RCD FROM CONTR	DATE FWD TO OTHER REVIEWER	DATE RCD FROM OTH REVIEWER	ACTION CODE	DATE OF ACTION	MAILED TO CONTR/ DATE RCD FRM APPR AUTH	
(a)	(b)	(c)	(d)	(e)	(f)		(g)	(h)	(i)	(j)	(k)	(l)	(m)	(n)	(o)	(p)	(q)	(r)
		01 57 19	Contractor Hazardous Material	3.7.1	G													
			Inventory Log															
			Preconstruction Survey	1.6.1														
			Regulatory Notifications	1.6.2														
			Environmental Manager	1.6.4														
			Qualifications															
			Employee Training Records	1.6.5														
			Environmental Protection Plan	1.7	G													
			Dirt and Dust Control Plan	1.7.9.1														
			Solid Waste Management Permit	1.10														
			SD-06 Test Reports															
			Monthly Solid Waste Disposal	1.10.1	G													
			Report															
			Laboratory Analysis	3.6.1.1.2														
			SD-07 Certificates															
			ECATTS Certificate Of	1.4.1.2	G													
			Completion															
			Employee Training Records	1.6.5	G													
			Erosion and Sediment Control	1.6.5														
			Inspector															
			SD-11 Closeout Submittals															
			Contractor Hazardous Material	3.7.1	G													
			Inventory Log															
			Regulatory Notifications	1.6.2	G													
			Assembled Employee Training	1.6.5	G													
			Records															

THIS PAGE INTENTIONALLY LEFT BLANK

SUBMITTAL REGISTER

CONTRACT NO. 1806349

TITLE AND LOCATION: Replace Underground Cabling in SP Area

CONTRACTOR:

ACTIVITY NO	TRANSMITTAL NO	SPEC SECT	DESCRIPTION ITEM SUBMITTED	PARAGRAPH #	CLASSIFICATION	GOVT OR A/E REVWR	CONTRACTOR: SCHEDULE DATES			CONTRACTOR ACTION			APPROVING AUTHORITY					
							SUBMIT	APPROVAL NEEDED BY	MATERIAL NEEDED BY	ACTION CODE	DATE OF ACTION	DATE FWD TO APPR AUTH/ DATE RCD FROM CONTR	DATE FWD TO OTHER REVIEWER	DATE RCD FROM OTH REVIEWER	ACTION CODE	DATE OF ACTION	MAILED TO CONTR/ DATE RCD FRM APPR AUTH	REMARKS
(a)	(b)	(c)	(d)	(e)	(f)		(g)	(h)	(i)	(j)	(k)	(l)	(m)	(n)	(o)	(p)	(q)	(r)
		01 57 19	Solid Waste Management Permit	1.10	G													
			Waste Determination	3.6.1	G													
			Documentation															
			Project Solid Waste Disposal	3.6.2.1	G													
			Documentation Report															
			Sales Documentation	3.6.2.1	G													
			Contractor Certification	3.6.2.1														
			Hazardous Waste/Debris	3.6.3.1	G													
			Management															
			Disposal Documentation for	3.6.3.5	G													
			Hazardous and Regulated Waste															
		01 74 19	SD-01 Preconstruction Submittals															
			Construction Waste Management	1.7	G													
			Plan															
			SD-11 Closeout Submittals															
			Final Construction Waste	1.9	S													
			Diversion Report															
		01 78 00	SD-03 Product Data															
			Warranty Management Plan	1.6.1														
			Warranty Tags	1.6.4														
			Final Cleaning	3.3														
			Spare Parts Data	1.5														
			SD-08 Manufacturer's Instructions															
			Instructions	1.6.1														
			SD-11 Closeout Submittals															
			As-Built Drawings	3.1	G													

THIS PAGE INTENTIONALLY LEFT BLANK

SUBMITTAL REGISTER

CONTRACT NO. 1806349

TITLE AND LOCATION: Replace Underground Cabling in SP Area

CONTRACTOR:

ACTIVITY NO	TRANSMITTAL NO	SPEC SECT	DESCRIPTION ITEM SUBMITTED	PARAGRAPH #	CLASSIFICATION	GOVT OR A/E REVWR	CONTRACTOR: SCHEDULE DATES			CONTRACTOR ACTION			APPROVING AUTHORITY					
							SUBMIT	APPROVAL NEEDED BY	MATERIAL NEEDED BY	ACTION CODE	DATE OF ACTION	DATE FWD TO APPR AUTH/ DATE RCD FROM CONTR	DATE FWD TO OTHER REVIEWER	DATE RCD FROM OTH REVIEWER	ACTION CODE	DATE OF ACTION	MAILED TO CONTR/ DATE RCD FRM APPR AUTH	REMARKS
(a)	(b)	(c)	(d)	(e)	(f)		(g)	(h)	(i)	(j)	(k)	(l)	(m)	(n)	(o)	(p)	(q)	(r)
		01 78 00	Record Drawings	3.2	G													
			Warranted Equipment and	1.6.1														
			Materials															
			Certification of EPA Designated	2.1	G													
			Items															
			Interim DD FORM 1354	3.4.1	G													
		02 41 00	SD-01 Preconstruction Submittals															
			Demolition Plan	1.2.2	G													
			Existing Conditions	1.11														
			SD-07 Certificates															
			Notification	1.7	G													
		03 30 00	SD-01 Preconstruction Submittals															
			Quality Control Program	1.6.5														
			Quality Control Personnel	1.6.6														
			Certifications															
			Quality Control Organizational	1.6.6														
			Chart															
			Laboratory Accreditation	1.6.8														
			Maturity Method Data	3.3.9														
			SD-02 Shop Drawings															
			Formwork	1.6.2.1														
			Reinforcing Steel	1.6.2.2														
			SD-03 Product Data															
			Joint Sealants	2.4.4														
			Joint Filler	2.4.3														
			Formwork Materials	2.1														

THIS PAGE INTENTIONALLY LEFT BLANK

SUBMITTAL REGISTER

CONTRACT NO. 1806349

TITLE AND LOCATION: Replace Underground Cabling in SP Area

CONTRACTOR:

ACTIVITY NO	TRANSMITTAL NO	SPEC SECT	DESCRIPTION ITEM SUBMITTED	PARAGRAPH #	CLASSIFICATION	GOVT OR A/E REVWR	CONTRACTOR: SCHEDULE DATES			CONTRACTOR ACTION			APPROVING AUTHORITY					
							SUBMIT	APPROVAL NEEDED BY	MATERIAL NEEDED BY	ACTION CODE	DATE OF ACTION	DATE FWD TO APPR AUTH/ DATE RCD FROM CONTR	DATE FWD TO OTHER REVIEWER	DATE RCD FROM OTH REVIEWER	ACTION CODE	DATE OF ACTION	MAILED TO CONTR/ DATE RCD FRM APPR AUTH	REMARKS
(a)	(b)	(c)	(d)	(e)	(f)		(g)	(h)	(i)	(j)	(k)	(l)	(m)	(n)	(o)	(p)	(q)	(r)
		03 30 00	Cementitious Materials	2.3.1														
			Vapor Retarder and Vapor Barrier	2.4.5														
			Concrete Curing Materials	2.4.1														
			Reinforcement	2.6														
			Admixtures	2.3.4														
			Nonshrink Grout	2.4.2														
			SD-05 Design Data															
			Concrete Mix Design	1.6.1.1	G													
			SD-06 Test Reports															
			Concrete Mix Design	1.6.1.1	G													
			Fly Ash	1.6.4.1														
			Pozzolan	1.6.4.1														
			Slag Cement	1.6.4.2														
			Aggregates	1.6.4.3														
			Compressive Strength Tests	3.13.3.3														
			Air Content	3.13.3.4														
			Slump Tests	3.13.3.1														
			Water	2.3.2														
			SD-07 Certificates															
			Reinforcing Bars	2.6.1														
			Welder Qualifications	1.7														
			Safety Data Sheets	1.6.3.1														
			Field Testing Technician and	1.6.6.2														
			Testing Agency															
			SD-08 Manufacturer's Instructions															
			Joint Sealants	2.4.4														

THIS PAGE INTENTIONALLY LEFT BLANK

SUBMITTAL REGISTER

CONTRACT NO. 1806349

TITLE AND LOCATION: Replace Underground Cabling in SP Area

CONTRACTOR:

ACTIVITY NO	TRANSMITTAL NO	SPEC SECT	DESCRIPTION ITEM SUBMITTED	PARAGRAPH #	CLASSIFICATION	GOVT OR A/E REVWR	CONTRACTOR: SCHEDULE DATES			CONTRACTOR ACTION			APPROVING AUTHORITY					
							SUBMIT	APPROVAL NEEDED BY	MATERIAL NEEDED BY	ACTION CODE	DATE OF ACTION	DATE FWD TO APPR AUTH/ DATE RCD FROM CONTR	DATE FWD TO OTHER REVIEWER	DATE RCD FROM OTH REVIEWER	ACTION CODE	DATE OF ACTION	MAILED TO CONTR/ DATE RCD FRM APPR AUTH	REMARKS
(a)	(b)	(c)	(d)	(e)	(f)		(g)	(h)	(i)	(j)	(k)	(l)	(m)	(n)	(o)	(p)	(q)	(r)
		03 30 00	Curing Compound	2.4.1														
		26 05 13	SD-01 Preconstruction Submittals															
			List of Splices and Terminations	1.4.1	G													
			to be Installed by															
			Splicer/Terminator															
			SD-02 Shop Drawings															
			Pulling Plan	3.1.3	G													
			SD-03 Product Data															
			Single-Conductor Shielded	2.1.2	G													
			Cables															
			Ground Conductors	2.3.1	G													
			Cable Supports and Fittings	2.5.1	G													
			Cable Tags	2.5.2	G													
			Fireproof Tape	2.5.3	G													
			Splices	2.4.2	G													
			Terminations	2.4.3	G													
			Cable Identification	3.1.7	G													
			SD-05 Design Data															
			Cable Pulling Calculations	3.1.2	G													
			SD-06 Test Reports															
			Factory Inspection and Tests	1.6	G													
			Field Acceptance Testing	3.3	G													
			Wire And Cable Test Record	3.3.1	G													
			Form															
			Phase Rotation Test Record	3.1.1	G													
			Form															

THIS PAGE INTENTIONALLY LEFT BLANK

SUBMITTAL REGISTER

CONTRACT NO. 1806349

TITLE AND LOCATION: Replace Underground Cabling in SP Area

CONTRACTOR:

ACTIVITY NO	TRANSMITTAL NO	SPEC SECT	DESCRIPTION ITEM SUBMITTED	PARAGRAPH #	CLASSIFICATION	GOVT OR A/E REVWR	CONTRACTOR: SCHEDULE DATES			CONTRACTOR ACTION			APPROVING AUTHORITY					
							SUBMIT	APPROVAL NEEDED BY	MATERIAL NEEDED BY	ACTION CODE	DATE OF ACTION	DATE FWD TO APPR AUTH/ DATE RCD FROM CONTR	DATE FWD TO OTHER REVIEWER	DATE RCD FROM OTH REVIEWER	ACTION CODE	DATE OF ACTION	MAILED TO CONTR/ DATE RCD FRM APPR AUTH	REMARKS
(a)	(b)	(c)	(d)	(e)	(f)		(g)	(h)	(i)	(j)	(k)	(l)	(m)	(n)	(o)	(p)	(q)	(r)
		26 05 13	SD-07 Certificates															
			Splicer/Terminator Certifications	1.5.3	G													
			SD-08 Manufacturer's Instructions															
			Terminations	2.4.3	G													
			Splices	2.4.2	G													
		26 08 00	SD-06 Test Reports															
			Acceptance Tests and	3.1	G													
			Inspections															
			SD-07 Certificates															
			Qualifications	1.3.1	G													
			Acceptance Test and Inspections	1.3.3	G													
			Procedure															
		31 00 00	SD-03 Product Data															
			Flowable fill mix design	2.2														
			Dewatering Work Plan															
			SD-06 Test Reports															
			Select Material Testing	3.9.2														
			Density tests	3.9.3														
		32 16 19	SD-03 Product Data															
			Concrete	2.1														
			SD-06 Test Reports															
			Field Quality Control	3.6														
		32 92 23	SD-03 Product Data															
			Fertilizer	2.4														
			SD-06 Test Reports															
			Topsoil composition tests	2.2.3														

THIS PAGE INTENTIONALLY LEFT BLANK

SUBMITTAL REGISTER

CONTRACT NO. 1806349

TITLE AND LOCATION: Replace Underground Cabling in SP Area

CONTRACTOR:

ACTIVITY NO	TRANSMITTAL NO	SPEC SECT	DESCRIPTION ITEM SUBMITTED	PARAGRAPH #	CLASSIFICATION	GOVT OR A/E REVWR	CONTRACTOR: SCHEDULE DATES			CONTRACTOR ACTION			APPROVING AUTHORITY					
							SUBMIT	APPROVAL NEEDED BY	MATERIAL NEEDED BY	ACTION CODE	DATE OF ACTION	DATE FWD TO APPR AUTH/ DATE RCD FROM CONTR	DATE FWD TO OTHER REVIEWER	DATE RCD FROM OTH REVIEWER	ACTION CODE	DATE OF ACTION	MAILED TO CONTR/ DATE RCD FRM APPR AUTH	REMARKS
(a)	(b)	(c)	(d)	(e)	(f)		(g)	(h)	(i)	(j)	(k)	(l)	(m)	(n)	(o)	(p)	(q)	(r)
		32 92 23	SD-07 Certificates															
			sods	2.1														
		33 71 02	SD-03 Product Data															
			Medium Voltage Cable	2.2	G													
			Medium Voltage Cable Joints	2.4	G													
			Medium Voltage Cable	2.3	G													
			Terminations															
			Live End Caps	2.5	G													
			SD-06 Test Reports															
			Medium Voltage Cable	2.12.2	G													
			Qualification and Production Tests															
			Field Acceptance Checks and	3.16.1	G													
			Tests															
			Arc-proofing Test	2.12.1	G													
			Cable Installation Plan and	3.3	G													
			Procedure															
			SD-07 Certificates															
			Cable splicer/terminator	1.5.1	G													
			Cable Installer Qualifications	1.5.2	G													

THIS PAGE INTENTIONALLY LEFT BLANK

SECTION 01 35 26

GOVERNMENTAL SAFETY REQUIREMENTS
05/24, CHG 1: 05/25

PART 1 GENERAL

1.1 REFERENCES

The publications listed below form a part of this specification to the extent referenced. The publications are referred to within the text by the basic designation only.

AMERICAN SOCIETY OF SAFETY PROFESSIONALS (ASSP)

ANSI/ASSP A10.34	(2021) Protection of the Public on or Adjacent to Construction Sites
ANSI/ASSP A10.44	(2020) Control of Energy Sources (Lockout/Tagout) for Construction and Demolition Operations

ASTM INTERNATIONAL (ASTM)

ASTM F855	(2020) Standard Specifications for Temporary Protective Grounds to Be Used on De-energized Electric Power Lines and Equipment

INSTITUTE OF ELECTRICAL AND ELECTRONICS ENGINEERS (IEEE)

IEEE 1048	(2016) Guide for Protective Grounding of Power Lines
IEEE C2	(2023) National Electrical Safety Code

INTERNATIONAL SAFETY EQUIPMENT ASSOCIATION (ISEA)

ANSI/ISEA Z89.1	(2014; R 2019) American National Standard for Industrial Head Protection

NATIONAL ELECTRICAL MANUFACTURERS ASSOCIATION (NEMA)

NEMA Z535.2	(2011; R 2017) Environmental and Facility Safety Signs

NATIONAL FIRE PROTECTION ASSOCIATION (NFPA)

NFPA 51B	(2024) Standard for Fire Prevention During Welding, Cutting, and Other Hot Work
NFPA 70	(2026; TIA 26-1; ERTA 26-1; TIA 26-2; TIA 26-3; TIA 26-4; TIA 26-5; TIA 26-6; TIA 26-7; ERTA 26-2; ERTA 26-3) National Electrical Code
NFPA 70E	(2024) Standard for Electrical Safety in the Workplace

NFPA 241	(2022; ERTA 22-1) Standard for Safeguarding Construction, Alteration, and Demolition Operations
NFPA 306	(2024) Standard for the Control of Gas Hazards on Vessels

U.S. ARMY CORPS OF ENGINEERS (USACE)

EM 385-1-1	(2024) Safety -- Safety and Occupational Health (SOH) Requirements

U.S. NATIONAL ARCHIVES AND RECORDS ADMINISTRATION (NARA)

29 CFR 1910	Occupational Safety and Health Standards
29 CFR 1915	Confined and Enclosed Spaces and Other Dangerous Atmospheres in Shipyard Employment
29 CFR 1926	Safety and Health Regulations for Construction
CPL 2.100	(1995) Application of the Permit-Required Confined Spaces (PRCS) Standards, 29 CFR 1910.146

1.2 DEFINITIONS

The following definitions are for the convenience of the reader. If there is a referenced document in the text of this specification section, that is the document that should define terms for that paragraph. If further clarification is needed, contact the Contracting Officer.

1.2.1 Site Safety and Health Officer (SSHO)

A Contractor Employee that is responsible for overseeing and ensuring implementation of the prime Contractor's Safety and Occupational Health (SOH) program according to the Contract, EM 385-1-1, applicable federal, state, and local requirements.

1.2.1.1 Level One SSHO

A designated employee with full-time SOH responsibility that meets and follows the requirements of EM 385-1-1.

1.2.1.2 Level Two SSHO

A designated employee with Level Two SSHO responsibility that meets and follows the requirements of EM 385-1-1. Level Two SSHOs cannot be assigned to projects that have a residual Risk Assessment Code (RAC) of high or extremely high.

1.2.1.3 Level Three SSHO

A designated Qualified Person or Competent Person with SOH responsibility that meets and follows the requirements of EM 385-1-1. Level 3 SSHOs cannot be assigned to projects that have a residual RAC of high or

extremely high.

1.2.1.4 Alternate SSHO

An employee that meets the definition of the contract-required level SSHO, but is not the primary SSHO.

1.2.2 Competent Person (CP)

The CP is a person designated in writing, who, through training, knowledge and experience, is capable of identifying, evaluating, and addressing existing and predictable hazards in the working environment or working conditions that are unsanitary, hazardous, or dangerous to personnel, and who has authorization to take prompt corrective measures to eliminate them.

1.2.3 Qualified Person (QP)

The QP is a person designated in writing, who, by possession of a recognized degree, certificate, or professional standing, or extensive knowledge, training, and experience, has successfully demonstrated their ability to solve or resolve problems related to the subject matter, the work, or the project.

1.3 SUBMITTALS

Government Acceptance or Approval does not remove responsibility from the Contractors for their actions or liability.

Government approval is required for submittals with a "G" classification. Submittals not having a "G" classification are for Contractor Quality Control approval. Submit the following in accordance with Section 01 33 00 SUBMITTAL PROCEDURES:

SD-01 Preconstruction Submittals

Accident Prevention Plan (APP); G

SD-06 Test Reports

Accident Reports; G

LHE Inspection Reports

Monthly Exposure Reports; G

SD-07 Certificates

Activity Hazard Analysis (AHA); G

Certificate of Compliance

Contractor Safety Self-Evaluation Checklist

Hot Work Permit

Standard Lift Plan; G

Critical Lift Plan; G

1.4 PUBLIC HEALTH EMERGENCIES

In the event of a declared public health emergency, follow safety precautions as required by the Occupational Safety and Health Administration (OSHA) www.osha.gov, the Centers for Disease Control and Prevention (CDC) www.cdc.gov, and as required by federal, state and local requirements.

1.5 MONTHLY EXPOSURE REPORTS

Provide a Monthly Exposure Report by the fifth day of each month for the previous month. This report is a compilation of employee-hours worked each month for all site workers, both Prime and subcontractor. Failure to submit the report may result in retention of up to 10 percent of the progress payment.

1.6 CONTRACTOR SAFETY SELF-EVALUATION CHECKLIST

Contracting Officer will provide a "Contractor Safety Self-Evaluation checklist" to the Contractor at the preconstruction conference. Complete the checklist monthly and submit with each request for payment voucher. This submission is required monthly even when a payment voucher is not requested. An acceptable score of 90 or greater is required. Failure to submit the completed safety self-evaluation checklist or achieve a score of at least 90 may result in retention of up to 10 percent of the voucher. The Contractor Safety Self-Evaluation checklist can be found on the Whole Building Design Guide website at www.wbdg.org/dod/ufgs/ufgs-01-35-26

1.7 REGULATORY REQUIREMENTS

In addition to the detailed requirements included in the provisions of this Contract, comply with the most recent edition of USACE EM 385-1-1, and the following federal, state, and local laws, ordinances, criteria, rules and regulations at the date of the Solicitation for this Contract. Submit matters of interpretation of standards to the appropriate administrative agency for resolution before starting work. Where the requirements of this specification, applicable laws, criteria, ordinances, regulations, and referenced documents vary, the most stringent requirements govern.

1.7.1 Subcontractor Safety Requirements

For this Contract, neither Contractor nor any subcontractor may enter into Contract with any subcontractor that fails to meet the following requirements. The term subcontractor in this and the following paragraphs means any entity holding a Contract with the Contractor or with a subcontractor at any tier.

1.7.1.1 Experience Modification Rate (EMR)

Subcontractors on this Contract must have an effective EMR less than or equal to 1.10, as computed by the National Council on Compensation Insurance (NCCI) or if not available, as computed by the state agency's rating bureau in the state where the subcontractor is registered, when entering into a subcontract agreement with the Prime Contractor or a subcontractor at any tier. The Prime Contractor may submit a written request for additional consideration to the Contracting Officer where the specified acceptable EMR range cannot be achieved. Relaxation of the EMR

range will only be considered for approval on a case-by-case basis for special conditions and must not be anticipated as tacit approval. Contractor's Site Safety and Health Officer (SSHO) must collect and maintain the certified EMR ratings for all subcontractors on the project and make them available to the Government at the Government's request.

1.7.1.2 OSHA Days Away from Work, Restricted Duty, or Job Transfer (DART) Rate

Subcontractors on this Contract must have a DART rate, calculated from the most recent, complete calendar year, less than or equal to 3.4 when entering into a subcontract agreement with the Prime Contractor or a subcontractor at any tier. The OSHA Dart Rate is calculated using the following formula:

(N/EH) x 200,000

Where:

N = number of injuries and illnesses with days away, restricted work, or job transfer

EH = total hours worked by all employees during most recent, complete calendar year

200,000 = base for 100 full-time equivalent workers (working 40-hours per week, 50 weeks per year)

The Prime Contractor may submit a written request for additional consideration to the Contracting Officer where the specified acceptable OSHA Dart rate range cannot be achieved for a particular subcontractor. Relaxation of the OSHA DART rate range will only be considered for approval on a case-by-case basis for special conditions and must not be anticipated as tacit approval. Contractor's Site Safety and Health Officer (SSHO) must collect and maintain self-certified OSHA DART rates for all subcontractors on the project and make them available to the Government at the Government's request.

1.8 SITE QUALIFICATIONS, DUTIES, AND MEETINGS

1.8.1 Site Safety and Health Officer (SSHO)

1.8.1.1 Qualifications of SSHO

All SSHOs will have met the training, experience requirements identified in the EM 385-1-1 and this Contract.

1.8.1.2 Duties of SSHO

All SSHOs will carry out the roles and responsibilities as identified in this Contract and the EM 385-1-1. All SSHOs will be designated on an ENG Form 6282, provided by the Contracting Officer. Superintendent, QC Manager, and SSHO are subject to dismissal if their required duties are not being effectively carried out. If either the Superintendent, QC Manager, or SSHO are dismissed, project work will be stopped and will not be allowed to resume until a suitable replacement is approved and the above duties are again being effectively carried out.

1.8.1.3 Safety Meetings

Conduct safety meetings to review past activities, plan for new or changed operations, review pertinent aspects of appropriate AHA (by trade), establish safe working procedures for anticipated hazards, and provide pertinent Safety and Occupational Health (SOH) training and motivation. Conduct meetings at least once a month for all supervisors at the project location. The SSHO, supervisors, or foremen must conduct meetings at least once a week for the trade workers. Document meeting minutes to include the date, persons in attendance, subjects discussed, and names of individual(s) who conducted the meeting. Maintain documentation on-site and furnish copies to the Contracting Officer on request. Notify the Contracting Officer of all scheduled meetings 7 calendar days in advance.

1.8.2 Roles and Responsibilities of Prime Contractor and SSHO

The Prime Contractor and SSHO must ensure that the requirements of all applicable OSHA and EM 385-1-1 are met for the project. The Prime Contractor must ensure an SSHO or an equally qualified Alternate SSHO(s) is at the worksite at all times to implement and administer the Contractor's safety program and Government accepted Accident Prevention Plan. If the required SSHO has to temporarily (that is, up to 24 hours / 1 day) leave the site of work due to unforeseen or emergency situations, a Level One, Two, or Three SSHO may be used in the interim and must be on the site of work at all times when work is being performed.

If the SSHO must be off-site for a period longer than 24 hours / 1 day, a qualified alternate that meets the contract requirements must be onsite.

a. Prime contractor must ensure all SSHOs will:

(1) Are designated on an ENG Form 6282.

(2) Meet minimum training and experience requirements identified in EM 385-1-1.

(3) Execute roles and responsibilities identified in EM 385-1-1.

1.8.3 Additional Requirements

The Level Two SSHO may also serve as the Quality Control Manager. The One SSHO must not serve as the Superintendent.

1.8.4 Competent Person for Confined Space Entry

Provide a CP for Confined Space Entry who meets the requirements of EM 385-1-1 and herein. The CP for Confined Space Entry must supervise the entry into each confined space in accordance with EM 385-1-1.

Since this work involves operations that handle combustible or hazardous materials, this person must have the ability to understand and follow through on the air sampling, Personal Protective Equipment (PPE), and instructions of a Marine Chemist, Coast Guard authorized persons, or Certified Industrial Hygienist. Confined space and enclosed space work must comply with NFPA 306, 29 CFR 1915, "Confined and Enclosed Spaces and Other Dangerous Atmospheres in Shipyard Employment," or as applicable in 29 CFR 1910 for general industry, 29 CFR 1926 for construction.

1.8.5 Qualified Trainer Requirements

Individuals qualified to instruct the 40-hour contract safety awareness course, or portions thereof, must meet the definition of a Competent Person Trainer as defined in the EM 385-1-1, and, at a minimum, possess a working knowledge of the following subject areas: EM 385-1-1, Electrical Standards, Lockout/Tagout, Fall Protection, Confined Space Entry for Construction; Excavation, Trenching and Soil Mechanics, and Scaffolds in accordance with 29 CFR 1926.

Instructors are required to:

a. Prepare class presentations that cover construction-related safety requirements.

b. Ensure that all attendees attend all sessions by using a class roster signed daily by each attendee. Maintain copies of the roster for at least 5 years. This is a certification class and must be attended 100 percent. In cases of emergency where an attendee cannot make it to a session, the attendee can make it up in another class session for the same subject.

c. Update training course materials whenever an update of the EM 385-1-1 becomes available.

d. Provide a written exam of at least 50 questions. Students are required to answer 80 percent correctly to pass.

e. Request, review and incorporate student feedback into a continuous course improvement program.

1.8.6 Preconstruction Conference

a. Contractor representatives who have a responsibility or significant role in accident prevention on the project must attend the preconstruction conference. This includes the project superintendent, Site Safety and Occupational Health Officer, quality control manager, or any other assigned safety and health professionals who participated in the development of the APP (including the Activity Hazard Analyses (AHAs) and special plans, program and procedures associated with it).

b. Discuss the details of the submitted APP to include incorporated plans, programs, procedures and a listing of anticipated AHAs that will be developed and implemented during the performance of the Contract. This list of proposed AHAs will be reviewed and an agreement will be reached between the Contractor and the Contracting Officer as to which phases will require an analysis. In addition, establish a schedule for the preparation, submittal, and Government review of AHAs to preclude project delays. The creation of the APP and Schedule will be created after being given Notice to Proceed.

c. Deficiencies in the submitted APP, identified during the Contracting Officer's review, must be corrected, and the APP re-submitted for review prior to the start of construction. Work is not permitted to begin until an APP is established that is acceptable to the Contracting Officer.

1.9 ACCIDENT PREVENTION PLAN (APP)

1.9.1 Accident Prevention Plan (APP)

Submit the Accident Prevention Plan (APP) for review and acceptance by the Government at least 15 calendar days prior to the start, after being given Notice to Proceed. A competent person must prepare the written site-specific APP. Prepare the APP in accordance with the format and requirements of EM 385-1-1, ENG Form 6293, and herein. The APP must be job-specific and address any unusual or unique aspects of the project or activity for which it is written. The APP must interface with the Contractor's overall safety and occupational health program referenced in the APP in the applicable APP element, and made site-specific. Describe the methods to evaluate past safety performance of potential subcontractors in the selection process. Also, describe innovative methods used to ensure and monitor safe work practices of subcontractors. The Government considers the Prime Contractor to be the "controlling employer" for all worksite safety and health of the subcontractors. Contractors are responsible for informing their subcontractors of the safety provisions under the terms of the Contract and the penalties for noncompliance, coordinating the work to prevent one craft from interfering with or creating hazardous working conditions for other crafts, and inspecting subcontractor operations to ensure that accident prevention responsibilities are being carried out. The APP must be signed in accordance with the APP and ENG Form 6293 Accident Prevention Plan Worksheet. The SSHO must provide and maintain the APP and a log of signatures by each subcontractor foreman, attesting that they have read and understand the APP, and make the APP and log available on-site to the Contracting Officer. If English is not the foreman's primary language, the Prime Contractor must provide an interpreter.

Submit the APP to the Contracting Officer within 30 calendar days of Contract award and not less than 10 calendar days prior to the date of the preconstruction conference for acceptance. Work cannot proceed without an accepted APP. Once reviewed and accepted by the Contracting Officer, the APP and attachments will be enforced as part of the Contract. Disregarding the provisions of this Contract or the accepted APP is cause for stopping of work, at the discretion of the Contracting Officer, until the matter has been rectified. Continuously review and amend the APP, as necessary, throughout the life of the Contract. Changes to the accepted APP must be made with the knowledge and concurrence of the Contracting Officer, project superintendent, SSHO and Quality Control Manager. Incorporate unusual or high-hazard activities not identified in the original APP as they are discovered. Should any severe hazard exposure (i.e., imminent danger) become evident, stop work in the area, secure the area, and develop a plan to remove the exposure and control the hazard. Notify the Contracting Officer within 24 hours of discovery. Eliminate and remove the hazard. In the interim, take all necessary action to restore and maintain safe working conditions in order to safeguard onsite personnel, visitors, the public (as defined by ANSI/ASSP A10.34), and the environment.

1.9.2 Names and Qualifications

Provide plans in accordance with the requirements outlined in EM 385-1-1, including the following:

a. Names and qualifications (resumes including education, training, experience and certifications) of site safety and health personnel

designated to perform work on this project to include the designated Site Safety and Health Officer and other competent and qualified personnel to be used. Specify the duties of each position.

b. As a minimum, designate and submit qualifications of Competent Persons (CP) for each of the following major areas: excavation; scaffolding; fall protection; hazardous energy; confined space; health hazard recognition, evaluation and control of chemical, physical and biological agents; and personal protective equipment and clothing to include selection, use and maintenance. Designate and submit qualifications for additional CPs as applicable to the work performed under this Contract.

1.9.3 Plans

Provide plans in the APP in accordance with the requirements outlined in EM 385-1-1, including the following:

1.9.3.1 Site Demolition Plan

Identify the safety and health aspects, and prepare in accordance with Section 02 41 00 DEMOLITION and referenced sources. Include engineering survey as applicable.

1.10 ACTIVITY HAZARD ANALYSIS (AHA)

Before beginning each activity, task or Definable Feature of Work (DFOW) involving a type of work presenting hazards not experienced in previous project operations, or where a new work crew or subcontractor is to perform the work, the Contractor(s) performing that work activity must prepare an AHA. AHAs must be developed by the Prime Contractor, subcontractor, or supplier performing the work, and provided for Prime Contractor review and approval before submitting to the Contracting Officer. AHAs must be signed by the SSHO, Superintendent, QC Manager and the subcontractor Foreman performing the work. Format the AHA in accordance with EM 385-1-1 or as directed by the Contracting Officer. Submit the AHA for review at least 15 working days prior to the start of each activity task, or DFOW. The Government reserves the right to require the Contractor to revise and resubmit the AHA if it fails to effectively identify the work sequences, specific anticipated hazards, site conditions, equipment, materials, personnel and the control measures to be implemented.

AHAs must identify competent persons required for phases involving high risk activities, including confined entry, crane and rigging, excavations, trenching, electrical work, fall protection, and scaffolding.

1.10.1 AHA Management

Review the AHA list periodically (at least monthly) at the Contractor supervisory safety meeting, and update as necessary when procedures, scheduling, or hazards change. Use the AHA during daily inspections by the SSHO to ensure the implementation and effectiveness of the required safety and health controls for that work activity.

1.10.2 AHA Signature Log

Each employee performing work as part of an activity, task or DFOW must review the AHA for that work and sign a signature log specifically

maintained for that AHA prior to starting work on that activity. The SSHO must maintain a signature log on site for every AHA. Provide employees whose primary language is other than English, with an interpreter to ensure a clear understanding of the AHA and its contents.

1.11 SITE SAFETY REFERENCE MATERIALS

Maintain safety-related references applicable to the project, including those listed in paragraph REFERENCES. Maintain applicable equipment manufacturer's manuals.

1.12 EMERGENCY MEDICAL TREATMENT

Contractors must arrange for their own emergency medical treatment in accordance with EM 385-1-1. The Government has no responsibility to provide emergency medical treatment.

1.13 NOTIFICATIONS AND REPORTS

1.13.1 Accident Notification

Notify the Contracting Officer in accordance with the EM 385-1-1 Accident Reporting Timeline.

Table
Accident Reporting Required Timeline

Accident Type	Notify KO or COR	Complete Final Accident Report on ENG 3394 and provide to KO or COR
Fatality, in-patient hospitalization, amputation, eye loss, or property damage over $600,000.	Immediately, no later than (NLT) 8 Hours	Within 7 Days
All other accidents and near misses	Immediately, no later than (NLT) 24 Hours	Within 7 Days

Within notification include Contractor name; Contract title; type of Contract; name of activity, installation or location where accident occurred; date and time of accident; names of personnel injured; extent of property damage, if any; extent of injury, if known, and brief description of accident (for example, type of construction equipment used and PPE used). Preserve the conditions and evidence on the accident site until the Government investigation team arrives on-site and Government investigation is conducted. Assist and cooperate fully with the Government's investigation(s) of any accident or near miss.

1.13.2 Accident Reports

a. Conduct an accident investigation for recordable injuries and illnesses, property damage, and near misses as defined in EM 385-1-1, to establish the root cause(s) of the accident. Complete the applicable NAVFAC Contractor Incident Reporting System (CIRS), and electronically submit via the NAVFAC Enterprise Safety Applications

Management System (ESAMS). Complete and submit an accident investigation report in ESAMS within 7 days for accidents as defined by EM 385-1-1. Complete the investigation report within 30 days. Accidents must include a written report submitted as an attachment in ESAMS using the following outline:

(1) Summary description to include:

(a) process

(b) findings

(c) outcomes

(2) Root Cause

(3) Direct Factors

(4) Indirect and Contributing Factors

(5) Corrective Actions

(6) Recommendations

All accidents are reportable, regardless of whether or not it is recordable.

a. Near Misses: For Navy Projects, complete the applicable documentation in NAVFAC Contractor Incident Reporting System (CIRS), and electronically submit via the NAVFAC Enterprise Safety Applications Management System (ESAMS). Near miss reports are considered positive and proactive Contractor safety management actions.

b. Conduct an accident investigation for any load handling equipment accident (including rigging accidents) to establish the root cause(s) of the accident. Complete the Load Handling Equipment (LHE) Accident Report (Crane and Rigging Accident Report) form and provide the report to the Contracting Officer within 30 calendar days of the accident. Do not proceed with crane operations until cause is determined and corrective actions have been implemented to the satisfaction of the Contracting Officer. The Contracting Officer will provide a blank copy of the accident report form.

1.13.3 LHE Inspection Reports

Submit LHE inspection reports required in accordance with EM 385-1-1 and as specified herein with Daily Reports of Inspections.

1.13.4 Certificate of Compliance and Pre-lift Plan/Checklist for LHE and Rigging

1.13.4.1 Certificate of Compliance

Provide a Certificate of Compliance for LHE utilized to perform work under this Contract in accordance with Section 16-7 of the EM 385-1-1. Post completed certificate on the crane.

1.13.4.2 Pre-Lift Plans

Develop either a Standard Lift Plan (SLP) or Critical Lift Plan (CLP) as required in accordance with EM 385-1-1. Utilize the Standard Lift Plan ENG Form 6203 for routine crane lifts and use the Critical Lift Plan ENR Form 6213 for non-routine crane lifts requiring more detailed planning and additional safety precautions, as defined by Section 16-2j of the EM 385-1-1. Submit lift plans to the Contracting Officer for approval within 15 calendar days in advance of planned lift.

1.14 HOT WORK PERMIT

1.14.1 Permit and Personnel Requirements

Submit and obtain a written permit prior to performing "Hot Work" (i.e., welding or cutting) or operating other flame-producing/spark producing devices, from the Fire Division. A permit is required from the Explosives Safety Office for work in and around where explosives are processed, stored, or handled. Contractors are required to meet all criteria before a permit is issued. Provide at least two 20 pound 4A:20 BC rated extinguishers for normal "Hot Work". The extinguishers must be current inspection tagged, and contain an approved safety pin and tamper resistant seal. It is also mandatory to have a designated FIRE WATCH for any "Hot Work" done at this activity. The Fire Watch must be trained in accordance with NFPA 51B and remain on-site for a minimum of 1 hour after completion of the task or as specified on the hot work permit.

1.15 CONFINED SPACE ENTRY REQUIREMENTS

Confined space entry must comply with EM 385-1-1, 29 CFR 1926, 29 CFR 1910, and Directive CPL 2.100. Any potential for a hazard in the confined space requires a permit system to be used.

1.15.1 Rescue Procedures and Coordination with Local Emergency Responders

Develop and implement an on-site rescue and recovery plan and procedures. The rescue plan must not rely on local emergency responders for rescue from a confined space.

PART 2 PRODUCTS

2.1 CONFINED SPACE SIGNAGE

Provide permanent signs integral to or securely attached to access covers for new permit-required confined spaces. Signs for confined spaces must comply with NEMA Z535.2. Provide signs with wording: "DANGER--PERMIT-REQUIRED CONFINED SPACE, DO NOT ENTER" in bold letters a minimum of one inch in height and constructed to be clearly legible with all paint removed. The signal word "DANGER" must be red and readable from 5 feet.

PART 3 EXECUTION

3.1 CONSTRUCTION AND OTHER WORK

Comply with EM 385-1-1, NFPA 70, NFPA 70E, NFPA 241, the APP, the AHA, Federal and State OSHA regulations, and other related submittals and activity fire and safety regulations. The most stringent standard prevails.

PPE is governed in all areas by the nature of the work the employee is performing. Use personal hearing protection at all times in designated noise hazardous areas or when performing noise hazardous tasks. Safety glasses must be worn or carried/available on each person. Mandatory PPE includes:

a. Head Protection that meets ANSI/ISEA Z89.1

b. Long Pants

c. Appropriate Safety Footwear

d. Appropriate Class Reflective Vests

3.1.1 Worksite Communication

Employees working alone in a remote location or away from other workers must be provided an effective means of emergency communications (i.e., cellular phone, two-way radios, land-line telephones or other acceptable means). The selected communication must be readily available (easily within the immediate reach) of the employee and must be tested prior to the start of work to verify that it effectively operates in the area/environment. Develop an employee check-in/check-out communication procedure to ensure employee safety.

3.1.2 Hazardous Material Use

Each hazardous material must receive approval from the Contracting Office or their designated representative prior to being brought onto the job site or prior to any other use in connection with this Contract. Allow a minimum of 10 working days for processing of the request for use of a hazardous material.

3.1.3 Unforeseen Hazardous Material

Contract documents identify materials such as PCB, lead paint, and friable and non-friable asbestos and other OSHA regulated chemicals (i.e., 29 CFR Part 1910.1000). If material(s) that can be hazardous to human health upon disturbance are encountered during demolition, repair, renovation, or construction operations, stop portions of work that would disturb the material and notify the Contracting Officer immediately. Within 14 calendar days the Government will determine if the material is hazardous. If material is not hazardous or poses no danger, the Government will direct the Contractor to proceed without change. If material is hazardous and handling of the material is necessary to accomplish the work, the Government will issue a modification.

3.2 UTILITY OUTAGE REQUIREMENTS

Apply for utility outages at least 15 days in advance. At a minimum, the written request must include the location of the outage, utilities being affected, duration of outage, any necessary sketches, and a description of the means to fulfill energy isolation requirements in accordance with EM 385-1-1. In accordance with EM 385-1-1, where outages involve Government or Utility personnel, coordinate with the Government on all activities involving the control of hazardous energy.

These activities include, but are not limited to, a review of Hazardous

Energy Control Program (HECP) and HEC procedures, as well as applicable Activity Hazard Analyses (AHAs). In accordance with EM 385-1-1 and NFPA 70E, work on energized electrical circuits must not be performed without prior Government authorization. Government permission is considered through the permit process and submission of a detailed AHA. Energized work permits are considered only when de-energizing introduces additional or increased hazard or when de-energizing is infeasible.

3.3 OUTAGE COORDINATION MEETING

After the utility outage request is approved and prior to beginning work on the utility system requiring shut-down, conduct a pre-outage coordination meeting in accordance with EM 385-1-1. This meeting must include the Prime Contractor, the Prime and subcontractors performing the work, the Contracting Officer, and the Installation representative. All parties must fully coordinate HEC activities with one another. During the coordination meeting, all parties must discuss and coordinate on the scope of work, HEC procedures (specifically, the lock-out/tag-out procedures for worker and utility protection), the AHA, assurance of trade personnel qualifications, identification of competent persons, and compliance with HECP training in accordance with EM 385-1-1. Clarify when personal protective equipment is required during switching operations, inspection, and verification.

3.4 CONTROL OF HAZARDOUS ENERGY (LOCKOUT/TAGOUT)

Provide and operate a Hazardous Energy Control Program (HECP) in accordance with EM 385-1-1, 29 CFR 1910, 29 CFR 1915, ANSI/ASSP A10.44, NFPA 70E.

3.4.1 Safety Preparatory Inspection Coordination Meeting with the Government or Utility

For electrical distribution equipment that is to be operated by Government or Utility personnel, the Prime Contractor and the subcontractor performing the work must attend the safety preparatory inspection coordination meeting, which will also be attended by the Contracting Officer's Representative, and required by EM 385-1-1. The meeting will occur immediately preceding the start of work and following the completion of the outage coordination meeting. Both the safety preparatory inspection coordination meeting and the outage coordination meeting must occur prior to conducting the outage and commencing with lockout/tagout procedures.

3.4.2 Lockout/Tagout Isolation

Where the Government or Utility performs equipment isolation and lockout/tagout, the Contractor must place their own locks and tags on each energy-isolating device and proceed in accordance with the HECP. Before any work begins, both the Contractor and the Government or Utility must perform energy isolation verification testing while wearing required PPE detailed in the Contractor's AHA and required by EM 385-1-1. Install personal protective grounds, with tags, to eliminate the potential for induced voltage in accordance with EM 385-1-1.

3.4.3 Lockout/Tagout Removal

Upon completion of work, conduct lockout/tagout removal procedure in accordance with the HECP. In accordance with EM 385-1-1, each lock and

tag must be removed from each energy isolating device by the authorized individual or systems operator who applied the device. Provide formal notification to the Government (by completing the Government form if provided by Contracting Officer's Representative), confirming that steps of de-energization and lockout/tagout removal procedure have been conducted and certified through inspection and verification. Government or Utility locks and tags used to support the Contractor's work will not be removed until the authorized Government employee receives the formal notification.

3.5 FALL PROTECTION PROGRAM

Establish a fall protection program, for the protection of all employees exposed to fall hazards. Within the program include company policy, identify roles and responsibilities, education and training requirements, fall hazard identification, prevention and control measures, inspection, storage, care and maintenance of fall protection equipment and rescue and evacuation procedures in accordance with EM 385-1-1.

3.5.1 Fall Protection Equipment and Systems

Enforce use of personal fall protection equipment and systems designated (to include fall arrest, restraint, and positioning) for each specific work activity in the Site Specific Fall Protection and Prevention Plan and AHA at all times when an employee is exposed to a fall hazard. Protect employees from fall hazards as specified in EM 385-1-1.

Provide personal fall protection equipment, systems, subsystems, and components that comply with EM 385-1-1 and 29 CFR 1926.

3.5.1.1 Additional Personal Fall Protection Measures

In addition to the required fall protection systems, other protective measures such as safety skiffs, personal floatation devices, and life rings, are required when working above or next to water in accordance with EM 385-1-1. Personal fall protection systems and equipment are required when working from an articulating or extendible boom, swing stages, or suspended platform. In addition, personal fall protection systems are required when operating other equipment such as scissor lifts. The need for tying-off in such equipment is to prevent ejection of the employee from the equipment during raising, lowering, travel, or while performing work.

3.5.1.2 Personal Fall Protection Equipment

Only a full-body harness with a shock-absorbing lanyard or self-retracting lanyard is an acceptable personal fall arrest body support device. The use of body belts is not acceptable. Harnesses must have a fall arrest attachment affixed to the body support (usually a Dorsal D-ring) and specifically designated for attachment to the rest of the system. Snap hooks and carabineers must be self-closing and self-locking, capable of being opened only by at least two consecutive deliberate actions and have a minimum gate strength of 3,600 lbs in all directions. Use webbing, straps, and ropes made of synthetic fiber. The maximum free fall distance when using fall arrest equipment must not exceed 6 feet, unless the proper energy absorbing lanyard is used. Always take into consideration the total fall distance and any swinging of the worker (pendulum-like motion), that can occur during a fall, when attaching a person to a fall arrest system. Equip all full body harnesses with Suspension Trauma Preventers

such as stirrups, relief steps, or similar in order to provide short-term relief from the effects of orthostatic intolerance in accordance with EM 385-1-1.

3.6 USE OF EXPLOSIVES

Explosives must not be used or brought to the project site without prior written approval from the Contracting Officer. Such approval does not relieve the Contractor of responsibility for injury to persons or for damage to property due to blasting operations.

Storage of explosives, when permitted on Government property, must be only where directed and in approved storage facilities. These facilities must be kept locked at all times except for inspection, delivery, and withdrawal of explosives.

3.7 ELECTRICAL

Perform electrical work in accordance with EM 385-1-1.

3.7.1 Electrical Work

As described in EM 385-1-1, electrical work is to be conducted in a de-energized state unless there is no alternative method for accomplishing the work. In those cases obtain an energized work permit from the Contracting Officer. The energized work permit application must be accompanied by the AHA and a summary of why the equipment/circuit needs to be worked energized. Underground electrical spaces must be certified safe for entry before entering to conduct work. Cables that will be cut must be positively identified and de-energized prior to performing each cut. Attach temporary grounds in accordance with ASTM F855 and IEEE 1048. Perform all high voltage cable cutting remotely using hydraulic cutting tool. When racking in or live switching of circuit breakers, no additional person other than the switch operator is allowed in the space during the actual operation. Plan so that work near energized parts is minimized to the fullest extent possible. Use of electrical outages clear of any energized electrical sources is the preferred method.

When working in energized substations, only qualified electrical workers are permitted to enter. When work requires work near energized circuits as defined by NFPA 70, high voltage personnel must use personal protective equipment that includes, as a minimum, electrical hard hat, safety footwear, insulating gloves and electrical arc flash protection for personnel as required by NFPA 70E. Insulating blankets, hearing protection, and switching suits may also be required, depending on the specific job and as delineated in the Contractor's AHA. Ensure that each employee is familiar with and complies with these procedures and 29 CFR 1910.

3.7.2 Qualifications

Electrical work must be performed by QP with verifiable credentials who are familiar with applicable code requirements. Verifiable credentials consist of State, National and Local Certifications or Licenses that a Master or Journeyman Electrician may hold, depending on work being performed, and must be identified in the appropriate AHA. Journeyman/Apprentice ratio must be in accordance with State, Local requirements applicable to where work is being performed.

3.7.3 Arc Flash

Conduct a hazard analysis/arc flash hazard analysis whenever work on or near energized parts greater than 50 volts is necessary, in accordance with NFPA 70E.

All personnel entering the identified arc flash protection boundary must be QPs and properly trained in NFPA 70E requirements and procedures. Unless permitted by NFPA 70E, no Unqualified Person is permitted to approach nearer than the Limited Approach Boundary of energized conductors and circuit parts. Training must be administered by an electrically qualified source and documented.

3.7.4 Grounding

Ground electrical circuits, equipment and enclosures in accordance with NFPA 70 and IEEE C2 to provide a permanent, continuous and effective path to ground unless otherwise noted by EM 385-1-1.

3.7.5 Testing

Temporary electrical distribution systems and devices must be inspected, tested and found acceptable for Ground-Fault Circuit Interrupter (GFCI) protection, polarity, ground continuity, and ground resistance before initial use, before use after modification and at least monthly. Monthly inspections and tests must be maintained for each temporary electrical distribution system, and signed by the electrical CP or QP.

-- End of Section --

THIS PAGE INTENTIONALLY LEFT BLANK

SECTION 01 42 00

SOURCES FOR REFERENCE PUBLICATIONS
05/24

PART 1 GENERAL

1.1 REFERENCES

Various publications are referenced in other sections of the specifications to establish requirements for the work. These references are identified in each section by document number, date and title. The document number used in the citation is the number assigned by the standards producing organization (e.g., ASTM B564 Standard Specification for Nickel Alloy Forgings). However, when the standards producing organization has not assigned a number to a document, an identifying number has been assigned for reference purposes.

1.2 ORDERING INFORMATION

The addresses of the standards publishing organizations whose documents are referenced in other sections of these specifications are listed below, and if the source of the publications is different from the address of the sponsoring organization, that information is also provided.

AMERICAN ASSOCIATION OF STATE HIGHWAY AND TRANSPORTATION OFFICIALS (AASHTO)
555 12th Street NW, Suite 1000
Washington, DC 20004
Ph: 202-624-5800
Fax: 202-624-5806
E-Mail: info@aashto.org
Internet: https://www.transportation.org/

AMERICAN CONCRETE INSTITUTE (ACI)
38800 Country Club Drive
Farmington Hills, MI 48331-3439
Ph: 248-848-3800
Fax: 248-848-3701
Internet: https://www.concrete.org/

AMERICAN SOCIETY OF SAFETY PROFESSIONALS (ASSP)
520 N. Northwest Highway
Park Ridge, IL 60068
Ph: 847-699-2929
E-mail: customerservice@assp.org
Internet: https://www.assp.org/

AMERICAN WELDING SOCIETY (AWS)
8669 NW 36 Street, #130
Miami, FL 33166-6672
Ph: 800-443-9353
Email: customercare@aws.org
Internet: https://www.aws.org/

AMERICAN WOOD PROTECTION ASSOCIATION (AWPA)
P.O. Box 361784
Birmingham, AL 35236-1784

Ph: 205-733-4077
Fax: 205-733-4075
Internet: http://www.awpa.com

ASSOCIATION OF EDISON ILLUMINATING COMPANIES (AEIC)

P.O. Box 58130
Washington, DC 20037
Ph: 205-257-3839
Fax: 205-257-2540
Internet: https://aeic.org/

ASTM INTERNATIONAL (ASTM)
100 Barr Harbor Drive, P.O. Box C700
West Conshohocken, PA 19428-2959
Ph: 610-832-9500
Fax: 610-832-9555
E-mail: service@astm.org
Internet: https://www.astm.org/

CONCRETE REINFORCING STEEL INSTITUTE (CRSI)
933 North Plum Grove Road
Schaumburg, IL 60173-4758
Ph: 847-517-1200
Email: crsi@crsi.org
Fax: 847-517-1206
Internet: http://www.crsi.org/

GREEN SEAL (GS)
601 13th St NW 12th Floor
Washington, DC 20005
Ph: 202-872-6400
Fax: 202-872-4324
E-mail: greenseal@greenseal.org
Internet: https://www.greenseal.org/

INSTITUTE OF ELECTRICAL AND ELECTRONICS ENGINEERS (IEEE)
445 and 501 Hoes Lane
Piscataway, NJ 08854-4141
Ph: 732-981-0060 or 800-701-4333
Fax: 732-981-9667
E-mail: onlinesupport@ieee.org
Internet: https://www.ieee.org/

INSULATED CABLE ENGINEERS ASSOCIATION (ICEA)
P.O. Box 493
Miamitown, OH 45041-9998
E-mail: info@icea.net
Internet: https://www.icea.net/

INTERNATIONAL CODE COUNCIL (ICC)
200 Massachusetts Ave, NW Suite 250
Washington, DC 20001
Ph: 800-786-4452 or 888-422-7233
Fax: 202-783-2348
E-mail: order@iccsafe.org
Internet: https://www.iccsafe.org/

INTERNATIONAL ELECTRICAL TESTING ASSOCIATION (NETA)
3050 Old Centre Ave. Suite 101
Portage, MI 49024
Ph: 269-488-6382 or 1-888-300-6382
Fax: 269-488-6383
Internet: https://www.netaworld.org/

INTERNATIONAL SAFETY EQUIPMENT ASSOCIATION (ISEA)
1101 Wilson Blvd, Suite 1425
Arlington, VA 22209-1762
Ph: 703-525-1695
Fax: 703-528-2148
Internet: https://safetyequipment.org/

NATIONAL ELECTRICAL MANUFACTURERS ASSOCIATION (NEMA)
1300 North 17th Street, Suite 900
Arlington, VA 22209
Ph: 703-841-3200
Email: communications@nema.org
Internet: https://www.nema.org

NATIONAL FIRE PROTECTION ASSOCIATION (NFPA)
1 Batterymarch Park
Quincy, MA 02169-7471
Ph: 800-344-3555
Fax: 800-593-6372
Internet: https://www.nfpa.org

NATIONAL INSTITUTE OF STANDARDS AND TECHNOLOGY (NIST)
100 Bureau Drive
Gaithersburg, MD 20899
Ph: 301-975-2000
Internet: https://www.nist.gov/

TURFGRASS PRODUCERS INTERNATIONAL (TPI)
444 E. Roosevelt Road
#346
Lombard, IL 60148
Ph: 800-405-8873 or 847-649-5555
Fax: 847-649-5678
E-mail: info@turfgrasssod.org
Internet: http://www.turfgrasssod.org

U.S. ARMY CORPS OF ENGINEERS (USACE)
CRD-C DOCUMENTS available on Internet: https://www.wbdg.org/army
THE CAD/BIM TECHNOLOGY CENTER FOR FACILITIES, INFRASTRUCTURE, AND ENVIRONMENT (USACE)on Internet:
https://cadbimcenter.erdc.dren.mil/
Order Other Documents from:
Official Publications of the Headquarters, USACE
E-mail: hqpublications@usace.army.mil
Internet: http://www.publications.usace.army.mil/
or
https://www.hnc.usace.army.mil/Missions/Engineering-Directorate/TECHINFO/

U.S. DEPARTMENT OF AGRICULTURE (USDA)
Order AMS Publications from:
AGRICULTURAL MARKETING SERVICE (AMS)

Seed Regulatory and Testing Branch
801 Summit Crossing Place, Suite C
Gastonia, NC 28054-2193
Ph: 704-810-8884
E-mail: PA@usda.gov
Internet: https://www.ams.usda.gov/
Order Other Publications from:
USDA Rural Development
Rural Utilities Service
STOP 1510, Rm 5135
1400 Independence Avenue SW
Washington, DC 20250-1510
Phone: (202) 720-9540
Internet:
https://www.rd.usda.gov/about-rd/agencies/rural-utilities-service

U.S. DEPARTMENT OF DEFENSE (DOD)
Order DOD Documents from:
Room 3A750-The Pentagon
1400 Defense Pentagon
Washington, DC 20301-1400
Ph: 703-571-3343
Fax: 215-697-1462
E-mail: customerservice@ntis.gov
Internet: https://www.ntis.gov/
Obtain Military Specifications, Standards and Related Publications from:
Acquisition Streamlining and Standardization Information System (ASSIST)
Department of Defense Single Stock Point (DODSSP)
Document Automation and Production Service (DAPS)
Building 4/D
700 Robbins Avenue
Philadelphia, PA 19111-5094
Ph: 215-697-6396 - for account/password issues
Internet: https://assist.dla.mil/online/start/; account registration required
Obtain Unified Facilities Criteria (UFC) from:
Whole Building Design Guide (WBDG)
National Institute of Building Sciences (NIBS)
1090 Vermont Avenue NW, Suite 700
Washington, DC 20005
Ph: 202-289-7800
Fax: 202-289-1092
Internet:
https://www.wbdg.org/ffc/dod/unified-facilities-criteria-ufc

U.S. ENVIRONMENTAL PROTECTION AGENCY (EPA)
1200 Pennsylvania Avenue, N.W.
Washington, DC 20004
Ph: 202-564-4700
Internet: https://www.epa.gov
--- Some EPA documents are available only from:
National Technical Information Service (NTIS)
5301 Shawnee Road
Alexandria, VA 22312
Ph: 703-605-6060 or 1-800-363-2068
Fax: 703-605-6880
TDD: 703-487-4639

E-mail: info@ntis.gov
Internet: https://www.ntis.gov/

U.S. FEDERAL HIGHWAY ADMINISTRATION (FHWA)
1200 New Jersey Ave., SE
Washington, DC 20590
Ph: 202-366-4000
E-mail: ExecSecretariat.FHWA@dot.gov
Internet: https://highways.dot.gov/
Order from:
Superintendent of Documents
U.S. Government Publishing Office (GPO)
732 N. Capitol Street, NW
Washington, DC 20401
Ph: 202-512-1800 or 866-512-1800
Bookstore: 202-512-0132
Internet: https://www.gpo.gov/

U.S. NATIONAL ARCHIVES AND RECORDS ADMINISTRATION (NARA)
8601 Adelphi Road
College Park, MD 20740-6001
Ph: 866-272-6272
Internet: https://www.archives.gov/
Order documents from:
Superintendent of Documents
U.S. Government Publishing Office (GPO)
732 N. Capitol Street, NW
Washington, DC 20401
Ph: 202-512-1800 or 866-512-1800
Bookstore: 202-512-0132
Internet: https://www.gpo.gov/

UL SOLUTIONS (UL)
333 Pfingsten Road
Northbrook, IL 60062
Ph: 877-854-3577 or 360-817-5500
E-mail: CustomerExperienceCenter@ul.com
Internet: https://www.ul.com/
UL Directories available through IHS at https://accuristech.com/

PART 2 PRODUCTS

Not used

PART 3 EXECUTION

Not used

-- End of Section --

THIS PAGE INTENTIONALLY LEFT BLANK

SECTION 01 45 00

QUALITY CONTROL
08/23, CHG 3: 08/25

PART 1 GENERAL

1.1 REFERENCES

The publications listed below form a part of this specification to the extent referenced. The publications are referred to in the text by the basic designation only.

ASTM INTERNATIONAL (ASTM)

ASTM C1077	(2026) Standard Practice for Agencies Testing Concrete and Concrete Aggregates for Use in Construction and Criteria for Testing Agency Evaluation
ASTM D3666	(2016) Standard Specification for Minimum Requirements for Agencies Testing and Inspecting Road and Paving Materials
ASTM D3740	(2019) Minimum Requirements for Agencies Engaged in the Testing and/or Inspection of Soil and Rock as Used in Engineering Design and Construction
ASTM E329	(2025b) Standard Specification for Agencies Engaged in Construction Inspection, Testing, or Special Inspection
ASTM E543	(2021) Standard Specification for Agencies Performing Non-Destructive Testing

U.S. ARMY CORPS OF ENGINEERS (USACE)

EM 385-1-1	(2024) Safety -- Safety and Occupational Health (SOH) Requirements

1.2 PAYMENT

Separate payment will not be made for providing and maintaining an effective Quality Control program. Include all associated costs in the applicable Bid Schedule item.

1.3 SUBMITTALS

Government approval is required for submittals with a "G" classification. Submittals not having a "G" classification are for Contractor Quality Control approval. Submit the following in accordance with Section 01 33 00 SUBMITTAL PROCEDURES.

SD-01 Preconstruction Submittals

Contractor Quality Control (CQC) Plan; G

SD-06 Test Reports

Verification Statement

1.4 GENERAL REQUIREMENTS

Establish and maintain an effective quality control (QC) system that complies with FAR 52.246-12 Inspection of Construction. QC is comprised of plans, procedures, and organization necessary to produce an end product that complies with the Contract requirements. The QC system covers all construction operations, both onsite and offsite, and must be keyed to the proposed construction sequence. The Quality Control Manager, Superintendent, Site Safety and Health Officer (SSHO), and all on-site supervisors are responsible for the quality of work and are subject to removal by the Contracting Officer for non-compliance with the quality requirements specified in the Contract. The Quality Control Manager must maintain a physical presence at the work site at all times and is the primary individual responsible for all quality control.

1.5 QUALITY CONTROL (QC) PROGRAM REQUIREMENTS

Establish and maintain a QC program as described in this section. The QC program consists of a QC Organization, QC Plan, QC Plan Meeting(s), a Coordination and Mutual Understanding Meeting, QC meetings, three phases of control, submittal review and approval, testing, completion inspections, QC certifications, and documentation necessary to provide materials, equipment, workmanship, fabrication, construction and operations that comply with the requirements of this Contract. The QC program must cover on-site and off-site work and be keyed to the work sequence. No construction work or testing may be performed unless the QC Manager is on the work site. The QC Manager must report to an officer of the firm and not be subordinate to the Project Superintendent or the Project Manager. The QC Manager, Project Superintendent and Project Manager must work together effectively. Although the QC Manager is the primary individual responsible for quality control, all individuals will be held responsible for the quality of work on the job.

1.5.1 Meetings

1.5.1.1 Quality Control Plan Meeting

Prior to submission of the QC Plan, the Contractor may request a meeting with the Contracting Officer to discuss the QC Plan requirements of this Contract.

The purpose of this meeting is to develop a mutual understanding of the QC Plan requirements prior to plan development and submission and to agree on the Contractor's list of Definable Feature of Work (DFOW).

1.5.1.2 Coordination and Mutual Understanding Meeting

After the Preconstruction Conference, before start of construction, and prior to acceptance by the Government of the CQC Plan, meet with the Contracting Officer and discuss the Contractor's quality control system. During the meeting, a mutual understanding of the system details must be developed, including the forms for recording the CQC operations, control activities, testing, administration of the system for both onsite and offsite work, and the interrelationship of Contractor's Management and control with the Government's Quality Assurance. Minutes of the meeting

will be prepared by the QC Manager and signed by the Contractor and the Government. Provide a copy of the signed minutes to all attendees and incorporate into the relevant QC Plan. At a minimum the Coordination and Mutual Understanding Meeting must be repeated when a new QC Manager is appointed. There can be other occasions when subsequent conferences will be called by either party to reconfirm mutual understandings or address deficiencies in the CQC system or procedures which can require corrective action by the Contractor.

1.5.1.2.1 Purpose

The purpose of this meeting is to develop a mutual understanding of the QC details, including documentation, administration for on-site and off-site work, design intent, environmental requirements and procedures, coordination of activities to be performed, and the coordination of the Contractor's management, production, and QC personnel. At the meeting, the Contractor must explain in detail how three phases of control will be implemented for each DFOW, as well as how each DFOW will be affected by each management plan or requirement as listed below:

a. Waste Management Plan.

b. Procedures for noise and acoustics management.

c. Environmental Protection Plan.

d. Environmental regulatory requirements.

1.5.1.2.2 Coordination of Activities

Coordinate activities included in various sections to assure efficient and orderly installation of each component. Coordinate operations included under different sections that are dependent on each other for proper installation and operation.

1.5.1.2.3 Attendees

As a minimum, the Contractor's personnel required to attend include an officer of the firm, the Project Manager, Project Superintendent, QC Manager, Alternate QC Manager, QC Specialists, and subcontractor representatives. Each subcontractor who will be assigned QC responsibilities must have a principal of the firm at the meeting.

1.5.1.3 Quality Control (QC) Meetings

After the start of construction, conduct weekly QC meetings led by the QC Manager at the work site with the Project Superintendent, and the other personnel as necessary. The QC Manager is to prepare the minutes of the meeting and provide a copy to the Contracting Officer within 2 working days after the meeting. The Contracting Officer may attend these meetings. As a minimum, accomplish the following at each meeting:

a. Review the minutes of the previous meeting.

b. Review the schedule and the status of work and deficiencies/rework. Review the most current approved schedule (in accordance with schedule specification) and the status of work and deficiencies/rework.

c. Review the status of submittals and Request For Information (RFIs).

d. Review the work to be accomplished in the next 3 weeks as defined by the schedule section paragraph WEEKLY LOOK AHEAD in Section 01 32 17.00 20 COST-LOADED NETWORK ANALYSIS SCHEDULES (NAS) and all quality control documentation required for that work.

e. Review Testing Plan and Log including status of tests performed since last QC Meeting.

f. Resolve QC and production problems. Discuss status of pending change orders.

g. Address items that may require revising the QC Plan.

h. Review Accident Prevention Plan (APP) and effectiveness of the safety program.

i. Review environmental requirements and procedures.

j. Review Environmental Management Plan.

k. Review Waste Management Plan.

l. Review the status of training completion.

1.5.2 Contractor Quality Control (CQC) Plan

Submit no later than 30 days after Contract Award, the CQC Plan proposed to implement the requirements FAR 52.246-12 Inspection of Construction. Construction will be permitted to begin only after acceptance of the CQC Plan and other Contract requirements

1.5.2.1 Content of Contractor Quality Control (CQC) Plan

Provide a CQC Plan, prior to start of construction that includes a table of contents, with major sections identified, pages numbered sequentially, and that documents the proposed methods and responsibilities for accomplishing quality control during the construction of the project. The CQC Plan must at a minimum include the following sections:

a. A description of the quality control organization and acknowledgment that the CQC staff will implement the three phase control system for all aspects of the work specified.

b. An organizational chart showing the quality control organization with individual names and job titles and lines of authority up to an executive of the company at the home office.

c. NAMES AND QUALIFICATIONS: Names and qualifications, in resume format, (including position titles and durations for qualifying experiences) for each person in the QC organization. Include the Construction Quality Management (CQM) for Contractors course certifications for the QC personnel as required by the paragraph CONSTRUCTION QUALITY MANAGEMENT TRAINING.

d. DUTIES, RESPONSIBILITY AND AUTHORITY OF QC PERSONNEL: Duties, responsibilities, and authorities of each person in the QC organization.

e. OUTSIDE ORGANIZATIONS: A listing of outside organizations, such as architectural and consulting engineering firms, that will be employed by the Contractor and a description of the services these firms will provide.

f. APPOINTMENT LETTERS: Letters signed by an officer of the firm appointing the QC Manager and Alternate QC Manager, and stating that they are responsible for implementing and managing the QC program as described in this Contract. Include in this letter the responsibility of the QC Manager and Alternate QC Manager to implement and manage the three phases of control, and their authority to stop work that is not in compliance with the Contract. Letters of direction are to be issued by the QC Manager to all other QC Specialists or quality control representatives outlining their duties, authorities, and responsibilities. Include copies of the letters in the QC Plan.

g. SUBMITTAL PROCEDURES AND INITIAL SUBMITTAL REGISTER: Procedures for reviewing, approving, scheduling, and managing submittals, including those of subcontractors, offsite fabricators, suppliers, and purchasing agents. Provide the name(s) of the person(s) in the QC organization authorized to review and certify submittals prior to approval. Provide the initial submittal of the Submittal Register as specified in Section 01 33 00 SUBMITTAL PROCEDURES.

h. TESTING LABORATORY INFORMATION: Testing laboratory information required by the paragraph ACCREDITATION REQUIREMENTS, as applicable.

i. TESTING PLAN AND LOG: A Testing Plan and Log that includes the tests required, associated feature of work required, referenced by the specification paragraph number requiring the test, the frequency, and the person responsible for each test.

j. Procedures to complete construction deficiencies from identification through acceptable corrective action. Establish verification procedures that identified deficiencies have been corrected. This phase is performed prior to beginning work on each definable feature of work, after all required plans, documents, materials are approved, and after copies are at the work site.

k. Reporting procedures, including proposed reporting formats.

l. Procedures for submitting and reviewing design changes/variations prior to submission to the Contracting Officer.

m. LIST OF DEFINABLE FEATURES: A Definable Feature of Work (DFOW) is a task that is separate and distinct from other tasks and has control requirements and work crews unique to that task. A DFOW is identified by different trades or disciplines, or it is work by the same trade in a different environment. A DFOW is by definition any item or activity on the construction schedule, and the schedule specification provides direction regarding how the DFOWs are to be structured. Include in the list of DFOWs for all activities on the Construction Schedule. Although each section of the specifications can generally be considered as a definable feature of work, there are frequently more than one definable features under a particular section. Identify the specification section number and schedule activity ID for each DFOW listed. The DFOW list will be reviewed in coordination with the construction schedule and agreed upon during the Coordination and Mutual Understanding Meeting.

n. PROCEDURES FOR PERFORMING AND TRACKING THE THREE PHASES OF CONTROL: Identify procedures used to ensure the three phases of control to manage the quality on this project. For each Definable Feature of Work (DFOW), a Preparatory and Initial phase checklist will be filled out during the Preparatory and Initial phase meetings. Conduct the Preparatory and Initial Phases and meetings with a view towards obtaining quality construction by planning ahead and identifying potential problems for each DFOW.

o. . PROCEDURES FOR COMPLETION INSPECTION: Procedures for identifying and documenting the completion inspection process. Include in these procedures the responsible party for punch out inspection, pre-final inspection, and final acceptance inspection.

p. ORGANIZATION AND PERSONNEL CERTIFICATIONS LOG: Procedures for coordinating, tracking and documenting all certifications required for entities such as subcontractors, testing laboratories, suppliers, and personnel. The QC Manager will ensure that certifications are current, appropriate for the work being performed, and will not lapse during any period of the Contract that the work is being performed.

1.5.3 Acceptance of the Quality Control (QC) Plan

The Contracting Officer's acceptance of the Contractor QC Planis required prior to the start of construction. The Contracting Officer reserves the right to require changes in the QC Plan and operations as necessary, including removal or addition of personnel, to ensure the specified quality of work. The Contracting Officer reserves the right to interview any member of the QC organization at any time to verify the submitted qualifications. All QC organization personnel are subject to acceptance by the Contracting Officer. The Contracting Officer may require the removal of any individual for non-compliance with quality requirements specified in the Contract.

1.5.4 Preliminary Construction Work Authorized Prior to Acceptance

The only construction work that is authorized to proceed prior to the acceptance of the QC Plan is mobilization of storage and office trailers, temporary utilities, and surveying with specific prior approval of the Contracting Officer.

1.5.5 Notification of Changes

Notify the Contracting Officer, in writing, of any proposed changes in the QC Plan or changes to the QC organization personnel. Proposed changes are subject to acceptance by the Contracting Officer.

1.6 QUALITY CONTROL (QC) ORGANIZATION

1.6.1 Quality Control (QC) Manager

1.6.1.1 Duties

Provide a QC Manager at the work site to implement and manage the QC program, and to serve as the Level two Site Safety and Health Officer (SSHO) as detailed in Section 01 35 26 GOVERNMENTAL SAFETY REQUIREMENTS. The only duties and responsibilities of the QC Manager are to manage and implement the QC program on this Contract. The QC Manager must attend the

partnering meetings, QC Plan Meetings, Coordination and Mutual Understanding Meeting, conduct the QC meetings, perform the three phases of control, perform submittal review and approval, ensure testing is performed and provide QC certifications and documentation required in this Contract. The QC Manager is responsible for managing and coordinating the three phases of control and documentation performed by testing laboratory personnel and any other inspection and testing personnel required by this Contract. The QC Manager is the manager of all QC activities.

1.6.1.2 Qualifications

The QC Manager must be an individual with a minimum of 5 years combined experience in the following positions: Project Superintendent, QC Manager, Project Manager, Project Engineer or Construction Manager on similar size and type construction Contracts which included the major trades that are part of this Contract. The individual must have at least 2 years experience as a QC Manager. The individual must be familiar with the requirements of EM 385-1-1 and have experience in the areas of hazard identification, safety compliance, and sustainability.

The QC Manager and all members of the QC organization must be capable of reading, writing, and conversing fluently in the English language.

1.6.1.3 Construction Quality Management Training

In addition to the above experience and education requirements, the QC Manager Alternate QC Manager, Superintendent, QC Specialist, and DQCM must have completed the CQM for Contractors course. If the QC Manager does not have a current certification, obtain the CQM for Contractors course certification within 90 days of award. This course is periodically offered by the Naval Facilities Engineering Systems Command and the Army Corps of Engineers. Contact the Contracting Officer for information on the next scheduled class.

The Construction Quality Management Training certificate expires after 5 years. If the QC Manager's certificate has expired, retake the course to remain current.

1.6.2 Organizational Changes

Maintain the QC staff with personnel as required by the specification section at all times. When it is necessary to make changes to the QC staff, revise the CQC Plan to reflect the changes and submit the changes to the Contracting Officer for acceptance.

1.6.3 Alternate Quality Control (QC) Manager Duties and Qualifications

Designate an alternate for the QC Manager at the work site to serve in the event of the designated QC Manager's absence. The period of absence may not exceed 2 weeks at one time, and not more than 30 workdays during a calendar year. The qualification requirements for the Alternate QC Manager must be the same as for the QC Manager.

1.7 SUBMITTAL AND DELIVERABLES REVIEW AND APPROVAL

Procedures for submission, review and approval of submittals are described in Section 01 33 00 SUBMITTAL PROCEDURES. Procedures must include field verification of relevant dimensions and component characteristics by the QC organization prior to submittal being sent to the Contracting Officer.

The CQC organization is responsible for certifying that all submittals and deliverables are in compliance with the Contract.

1.8 THREE PHASES OF CONTROL

CQC enables the Contractor to ensure that the construction, including that of subcontractors and suppliers, complies with the requirements of the Contract. At least three phases of control must be conducted by the QC Manager to adequately cover both on-site and off-site work for each definable feature of the construction work as follows:

1.8.1 Preparatory Phase

Document the results of the preparatory phase actions by separate minutes prepared by the QC Manager and attach to the daily CQC report. Instruct applicable workers as to the acceptable level of workmanship required to meet Contract specifications.

Notify the Contracting Officer at least 2 business days in advance of each preparatory phase meeting. The meeting will be conducted by the QC Manager and attended by the Project Superintendent, and the foreman responsible for the DFOW. When the DFOW will be accomplished by a subcontractor, that subcontractor's foreman must attend the preparatory phase meeting. This phase is performed prior to beginning work on each definable feature of work, after all required plans/documents/materials are approved/accepted, and after copies are at the work site. Perform the following prior to beginning work on each DFOW:

a. Review each paragraph of the applicable specification sections, reference codes, and standards. Make available during the prepatory inspection a copy of those sections of referenced codes and standards applicable to that portion of the work to be accomplished in the field. Maintain and make available in the field for use by Government personnel until final acceptance of the work.

b. Review the Contract drawings.

c. Verify that field measurements are as indicated on construction or shop drawings or both before confirming product orders, to minimize waste due to excessive materials.

d. Verify that appropriate shop drawings and submittals for materials and equipment have been submitted and approved. Verify receipt of approved factory test results, when required.

e. Review the testing plan and ensure that provisions have been made to provide the required QC testing.

f. Examine the work area to ensure that the required preliminary work has been completed and complies with the Contract and ensure any deficiencies/rework items in the preliminary work have been corrected and confirmed by the Contracting Officer.

g. Review coordination of product/material delivery to designated prepared areas to execute the work.

h. Examine the required materials, equipment and sample work to ensure that they are on hand and conform to the approved shop drawings and submitted data and are properly stored.

i. Check to assure that all materials and equipment have been tested, submitted, and approved.

j. Discuss specific controls to be used, construction methods, construction tolerances, workmanship standards, and the approach that will be used to provide quality construction by planning ahead and identifying potential problems for each DFOW. Ensure any portion of the plan requiring separate Contracting Officer acceptance has been approved.

k. Review the APP and appropriate Activity Hazard Analysis (AHA) to ensure that applicable safety requirements are met, and that required Safety Data Sheets (SDS) are submitted.

1.8.2 Initial Phase

Notify the Contracting Officer at least 2 business days in advance of each initial phase. When construction crews are ready to start work on a DFOW, conduct the initial phase with the Project Superintendent, and the foreman responsible for that DFOW. Observe the initial segment of the DFOW to ensure that the work complies with Contract requirements. Document the results of the initial phase in the Initial Phase Checklist. Repeat the initial phase for each new crew to work on-site when acceptable levels of specified quality are not being met. Indicate the exact location of initial phase for definable feature of work for future reference and comparison with follow-up phases. Perform the following for each DFOW:

a. Check work to ensure that it is in full compliance with Contract requirements. Review minutes of the preparatory meeting.

b. Verify adequacy of controls to ensure full Contract compliance. Verify required control inspection and testing comply with the Contract.

c. Establish level of workmanship and verify that it meets the minimum acceptable workmanship standards. Compare with required sample panels as appropriate.

d. Resolve any workmanship issues.

e. Ensure that testing is performed by the approved laboratory.

f. Check work procedures for compliance with the APP and the appropriate AHA to ensure that applicable safety requirements are met.

g. Review project specific work plans (i.e., HAZMAT Abatement, Stormwater Management) to ensure all preparatory work items have been completed and documented.

1.8.3 Follow-Up Phase

Perform the following for on-going DFOW daily, or more frequently as necessary, until the completion of each DFOW. The Final Follow-Up for any DFOW will clearly note in the daily report the DFOW is completed, and all deficiencies/rework items have been completed in accordance with the paragraph DEFICIENCY/REWORK ITEMS LIST. Each DFOW that has completed the Initial Phase and has not completed the Final Follow-up must be included on each daily report. If no work was performed on that DFOW for the

period of that daily report, it must be so noted. Document all Follow-Up activities for DFOWs in the daily CQC Report:

a. Ensure the work including control testing complies with Contract requirements until completion of that particular work feature. Record checks in the CQC documentation.

b. Maintain the quality of workmanship required.

c. Ensure that testing is performed by the approved laboratory.

d. Ensure that deficiencies/rework items are being corrected. Conduct final follow-up checks and correct all deficiencies prior to the start of additional features of work which may be affected by the deficient work.

e. Do not build upon nor conceal non-conforming work.

f. Assure manufacturers' representatives have performed necessary inspections if required and perform safety inspections.

1.8.4 Additional Preparatory and Initial Phases

Conduct additional preparatory and initial phases on the same DFOW if the quality of on-going work is unacceptable, if there are changes in the applicable QC organization, if there are changes in the on-site production supervision or work crew, if work on a DFOW has not started within 45 days of the initial preparatory meeting or has resumed after 45 days of inactivity, or if other problems develop.

1.8.5 Notification of Three Phases of Control for Off-Site Work

Notify the Contracting Officer at least 2 weeks prior to the start of the preparatory and initial phases.

1.8.6 Deficiency/Rework Items List

The QC Manager must maintain a list of work that does not comply with the Contract, identifying what items need to be corrected, the activity ID number associated with the item, the date the item was originally discovered, the date the item will be corrected by, and the date the item was corrected.

The QC Manager reviews the list at each weekly QC Meeting:

a. There is no requirement to report a deficiency/rework item that is corrected the same day it is discovered.

b. No successor task may be advanced beyond the preparatory phase meeting until all deficiencies/rework items have been cleared by the QC Manager and concurred with by the Contracting Officer. This must be confirmed as part of the Preparatory Phase activities.

c. Attach a copy of the "Deficiency/Rework Items List" to the last daily CQC Report of each month.

d. The Contractor is responsible for including those items identified by the Contracting Officer.

e. All deficiencies/rework items must be confirmed as corrected by the QC Manager, and concurred by the Contracting Officer, prior to commencement of any completion inspections per paragraph COMPLETION INSPECTIONS unless specifically exempted by the Contracting Officer.

f. Non-Compliance with these requirements is grounds for removal in accordance with paragraph ACCEPTANCE OF THE QUALITY CONTROL (QC) PLAN.

g. All delays, concurrent or related to failure to manage, monitor, control, and correct deficiencies/rework items are entirely the responsibility of the Contractor and can not be made the subject, or any component of any request for additional time or compensation.

1.9 TESTING

Perform specified or required tests to verify that control measures are adequate to provide a product which conforms to Contract requirements. Upon request, furnish to the Government duplicate samples of test specimens for possible testing by the Government. Testing includes operation and acceptance tests when specified. Procure the services of an U.S. Army Corps of Engineers approved testing laboratory or establish an approved testing laboratory at the project site or within 25 miles. Perform the following activities and record and provide the following data:

a. Verify that testing procedures comply with Contract requirements.

b. Verify that facilities and testing equipment are available and comply with testing standards.

c. Check test instrument calibration data against certified standards.

d. Verify that recording forms and test identification control number system, including all test documentation requirements, have been prepared.

e. Record results of all tests taken, both passing and failing on the CQC report for the date taken. Specification paragraph reference, location where tests were taken, and the sequential control number identifying the test. If approved by the Contracting Officer, actual test reports are submitted later with a reference to the test number and date taken. Provide an information copy of tests performed by an offsite or commercial test facility directly to the Contracting Officer. Failure to submit timely test reports as stated results in nonpayment for related work performed and disapproval of the test facility for this Contract.

1.9.1 Accreditation Requirements

Construction materials testing laboratories must be accredited by a laboratory accreditation authority and must submit a copy of the Certificate of Accreditation and Scope of Accreditation. The laboratory's scope of accreditation must include the appropriate ASTM standards (ASTM E329, ASTM C1077, ASTM D3666, ASTM D3740, ASTM E543) listed in the technical sections of the specifications. Laboratories engaged in Hazardous Materials Testing must meet the requirements of OSHA and EPA. The policy applies to the specific laboratory performing the actual testing, not just the Corporate Office.

1.9.2 Laboratory Accreditation Authorities

Laboratory Accreditation Authorities include the National Voluntary Laboratory Accreditation Program (NVLAP) administered by the National Institute of Standards and Technology at https://www.nist.gov/nvlap, the American Association of State Highway and Transportation Officials (AASHTO) Accreditation Program at http://www.aashtoresource.org/aap/overview, International Accreditation Services, Inc. (IAS) at https://www.iasonline.org/, U.S. Army Corps of Engineers Materials Testing Center (MTC) at https://www.erdc.usace.army.mil/Media/Fact-Sheets/Fact-Sheet-Article-View/Article/476661/materials-testing-center/, the American Association for Laboratory Accreditation (A2LA) program at https://a2la.org/, the Washington Association of Building Officials (WABO) at https://www.wabo.org/ (Approval authority for WABO is limited to projects within Washington State), and the Washington Area Council of Engineering Laboratories (WACEL) at https://www.wacel.org/lab-accreditation-and-inspection-agency-audit-programs/laboratory-accreditation-program/(Approval authority by WACEL is limited to projects within Facilities Engineering Command (FEC) Washington geographical area).

1.9.3 Capability Check

The Contracting Officer retains the right to check laboratory equipment in the proposed laboratory and the laboratory technician's testing procedures, techniques, and other items pertinent to testing, for compliance with the standards set forth in this Contract. Laboratories utilized for testing soils, concrete, asphalt, and steel must meet criteria detailed in ASTM D3740 and ASTM E329.

1.9.4 Test Results

Cite applicable Contract requirements, tests or analytical procedures used. Provide actual results and include a statement that the item tested or analyzed conforms or fails to conform to specified requirements. If the item fails to conform, notify the Contracting Officer immediately. Conspicuously stamp the cover sheet for each report in large red letters "CONFORMS" or "DOES NOT CONFORM" to the specification requirements, whichever is applicable. Test results must be signed by a testing laboratory representative authorized to sign certified test reports. Furnish the signed reports, certifications, and other documentation to the Contracting Officer via the QC Manager. Furnish a summary report of field tests at the end of each month, in accordance with paragraph DOCUMENTATION AND INFORMATION FOR THE CONTRACTING OFFICER.

1.9.5 Test Reports and Monthly Summary Report of Tests

Furnish the signed reports, certifications, and a summary report of field tests at the end of each month to the Contracting Officer. Attach a copy of the summary report to the last daily CQC Report of each month.

1.10 COMPLETION INSPECTIONS

1.10.1 Punch-Out Inspection

Near the completion of all work or any increment thereof, established by a completion time stated in the Contract Clause entitled "Commencement, Prosecution, and Completion of Work," or stated elsewhere in the specifications, the QC Manager must conduct an inspection of the work and

develop a "punch list" of items which do not conform to the approved drawings, specifications, and Contract. Include in the punch list any remaining items on the "Deficiency/Rework Items List", that were not corrected prior to the Punch-Out Inspection as approved by the Contracting Officer in accordance with the paragraph DEFICIENCY/REWORK ITEMS LIST. Include within the punch list the estimated date by which the deficiencies will be corrected. Provide a copy of the punch list to the Contracting Officer.

The QC Manager, or staff, must make follow-on inspections to ascertain that all deficiencies have been corrected. All punch list items must be confirmed as corrected by the QC Manager and concurred by the Contracting Officer. Once this is accomplished, notify the Government that the facility is ready for the Government "Pre-Final Inspection".

1.10.2 Pre-Final Inspection

The Government and QC Manager will perform this inspection to verify that the facility is complete and ready to be occupied. A Government "Pre-Final Punch List" will be documented by the QC Manager as a result of this inspection. The QC Manager will ensure that all items on this list are corrected and concurred by the Contracting Officer prior to notifying the Government that a "Final" inspection with the Client can be scheduled. All items noted on the "Pre-Final" inspection must be corrected and concurred by the Contracting Officer in a timely manner and be accomplished before the Contract completion date for the work, or any increment thereof, if the project is divided into increments by separate completion dates unless exceptions are directed by the Contracting Officer.

1.10.3 Final Acceptance Inspection

Notify the Contracting Officer at least 14 calendar days prior to the date a final acceptance inspection can be held. State within the notice that all items previously identified on the pre-final punch list will be corrected and acceptable, along with any other unfinished Contract work, by the date of the final acceptance inspection. The Contractor must be represented by the QC Manager, the Project Superintendent, and others deemed necessary. Attendees for the Government will include the Contracting Officer, other Government QA personnel, and personnel representing the Client. Failure of the Contractor to have all Contract work acceptably complete for this inspection will be cause for the Contracting Officer to bill the Contractor for the Government's additional inspection cost in accordance with the Contract Clause entitled "Inspection of Construction."

1.11 QUALITY CONTROL (QC) CERTIFICATIONS

1.11.1 Contractor Quality Control (CQC) Report Certification

Contain the following statement within the CQC Report: "On behalf of the Contractor, I certify that this report is complete and correct and equipment and material used, and work performed during this reporting period is in compliance with the Contract drawings and specifications to the best of my knowledge, except as noted in this report."

1.11.2 Completion Certification

Upon completion of work under this Contract, the QC Manager must furnish a certificate to the Contracting Officer attesting that "the work has been

completed, inspected, tested and is in compliance with the Contract." Provide a copy of this final QC Certification for completion to the preparer of the Operation & Maintenance (O&M) documentation.

1.11.3 Invoice Certification

Furnish a certificate to the Contracting Officer with each payment request, signed by the QC Manager, attesting that as-built drawings are current, coordinated and attesting that the work for which payment is requested, including stored material, complies with Contract requirements.

1.12 DOCUMENTATION AND INFORMATION FOR THE CONTRACTING OFFICER

1.12.1 Construction Documentation

Prepare a Construction Production Report and a Contractor Quality Control Report for each day that work is performed. Attach the Construction Production Report to the Contractor Quality Control Report prepared for the same day. Maintain current and complete records of on-site and off-site QC program operations and activities.
Account for each calendar day throughout the life of the Contract.

The Project Superintendent and the QC Manager must prepare and sign the Contractor Production and CQC Reports, respectively. Every space on the forms must be filled in. Use N/A if nothing can be reported in one of the spaces. The reporting of work must be identified by terminology consistent with the construction schedule. In the "Remarks" sections of the reports, enter pertinent information including directions received, problems encountered during construction, work progress and delays, conflicts or errors in the drawings or specifications, field changes, safety hazards encountered, instructions given and corrective actions taken, delays encountered, a record of visitors to the work site, quality control problem areas, deviations from the QC Plan, construction deficiencies encountered, and meetings held. For each entry in the report(s), identify the Schedule Activity No. that is associated with the entered remark.

1.12.2 Quality Control Activities

CQC and Contractor Production reports will be prepared daily to maintain current records providing factual evidence that required quality control activities and tests have been performed. Include in these records the work of subcontractors and suppliers on an acceptable form that includes, as a minimum, the following information:

a. The name and area of responsibility of the Contractors and any subcontractors.

b. Operating plant/equipment with hours worked, idle, or down for repair.

c. Work performed each day, giving location, description, and by whom. When a Network Analysis Schedule (NAS) is used, identify each item of work performed each day by NAS activity number.

d. Control phase activities performed. Preparatory, and Initial phase Checklists associated with the DFOW referenced to the construction schedule. Follow-up phase activities identified to the DFOW. If testing or specific QC Specialist activities are associated with the

Follow-up phase activities for a specific DFOW note this and include those reports.

e. Test and control activities performed with results and references to specifications and drawings requirements. Identify the control phase (Preparatory, Initial, Follow-up). List of deficiencies noted, along with corrective action in accordance with the paragraph DEFICIENCY/REWORK ITEMS LIST.

f. Quantity of materials received at the site with statement as to acceptability, storage, and reference to specifications and drawings requirements.

g. Submittals and deliverables reviewed, with Contract reference, by whom, and action taken.

h. Offsite surveillance activities, including actions taken.

i. Job safety evaluations stating what was checked, results, and instructions or corrective actions.

j. Instructions given/received and conflicts in plans and specifications.

1.12.3 Verification Statement

Indicate a description of trades working on the project; the number of personnel working; weather conditions encountered; and any delays encountered. Cover both conforming and deficient features and include a statement that equipment and materials incorporated in the work and workmanship comply with the Contract.

Furnish the original and one copy of these records in report form to the Government by 10:00 AM the next working day after the date covered by the report. As a minimum, prepare and submit one report for every 7 days of no work and on the last day of a no work period. All calendar days need to be accounted for throughout the life of the Contract. The first report following a day of no work will be for that day only. Reports need to be signed and dated by the QC Manager. Include copies of test reports and copies of reports prepared by all subordinate quality control personnel within the QC Manager Report.

1.12.4 Quality Control Validation

Establish and maintain the following in an electronic folder. Divide folder into a series of tabbed sections as shown below. Ensure folder is updated at each required progress meeting.

a. CQC Meeting minutes in accordance with paragraph QUALITY CONTROL (QC) MEETINGS.

b. All completed Preparatory and Initial Phase Checklists, arranged by specification section, further sorted by DFOW referenced to the construction schedule. Submit each individual Phase Checklist the day the phase event occurs as part of the CQC daily report.

c. All milestone inspections, arranged by Activity Number referenced to the construction schedule.

d. An up-to-date copy of the Testing Plan and Log with supporting field

test reports, arranged by specification section referenced to the DFOW to which individual reports results are associated. Individual field test reports will be submitted within 2 working days after the test is performed in accordance with the paragraph QUALITY CONTROL ACTIVITIES. Monthly Summary Report of Tests: Submit the report as an electronic attachment to the CQC Report at the end of each month.

e. Copies of all Contract modifications, arranged in numerical order. Also include documentation that modified work was accomplished.

f. An up-to-date copy of the paragraph DEFICIENCY/REWORK ITEMS LIST.

g. g. Upon commencement of Completion Inspections of the entire project or any defined portion, maintain up-to-date copies of all punch lists issued by the QC staff to the Contractor and subcontractors and all punch lists issued by the Government in accordance with the paragraph COMPLETION INSPECTIONS.

1.12.5 Testing Plan and Log

As tests are performed, the QC Manager will record on the "Testing Plan and Log" the date the test was performed and the date the test results were forwarded to the Contracting Officer. Attach a copy of the updated "Testing Plan and Log" to the last daily CQC Report of each month. Provide a copy of the final "Testing Plan and Log" to the preparer of the Operation & Maintenance (O&M) documentation.

1.12.6 As-Built Drawings

The QC Manager must ensure the as-built drawings, required by Section 01 78 00 CLOSEOUT SUBMITTALS are kept current on a daily basis and marked to show deviations which have been made from the Contract drawings. The as-built drawings document commences with the QC Manager ensuring all amendments, or changes to the Contract prior to Contract award are accurately noted in the initial document set creating the accurate baseline of the Contract prior to any work starting. Ensure each deviation has been identified with the appropriate modifying documentation (e.g., PC No., Modification No., Request for Information No.). The QC Manager must initial each revision. Upon completion of work, the QC Manager will furnish a certificate attesting to the accuracy of the as-built drawings prior to submission to the Contracting Officer.

1.13 NOTIFICATION ON NON-COMPLIANCE

The Contracting Officer will notify the Contractor of any detected non-compliance with the Contract. Take immediate corrective action after receipt of such notice. Such notice, when delivered to the Contractor at the work site, is deemed sufficient for the purpose of notification. If the Contractor fails or refuses to comply promptly, the Contracting Officer may issue an order stopping all or part of the work until satisfactory corrective action has been taken. No part of the time lost due to such stop orders will be made the subject of a claim for extension of time for excess costs or damages by the Contractor.

1.14 DELIVERY, STORAGE, AND HANDLING

Designate receiving/storage areas for incoming material to be delivered according to installation schedule and to be placed convenient to work area in order to minimize waste due to excessive materials handling and

misapplication. Store and handle materials in a manner as to prevent loss from weather and other damage. Keep materials, products, and accessories covered and off the ground, and store in a dry, secure area. Prevent contact with material that may cause corrosion, discoloration, or staining. Protect all materials and installations from damage by the activities of other trades.

PART 2 PRODUCTS

Not used.

PART 3 EXECUTION

Not used.

-- End of Section --

THIS PAGE INTENTIONALLY LEFT BLANK

CONTRACTOR PRODUCTION REPORT

(ATTACH ADDITIONAL SHEETS IF NECESSARY)

DATE	Enter Date (DD/MMM/YY)
REPORT NO	Enter Report # Here

CONTRACT NO	TITLE AND LOCATION
Enter Cnt# Here	Enter Title and Location of Construction Contract Here

CONTRACTOR	SUPERINTENDENT
Enter The Contractor's Company Name Here	Enter Superintendent's Name Here

AM WEATHER	PM WEATHER	MAX TEMP (F)	MIN TEMP (F)
Enter AM Weather Data Here	Enter PM Weather Data Here	Enter Max Temp Here	Enter Min Temp Here

WORK PERFORMED TODAY

Schedule Activity No.	WORK LOCATION AND DESCRIPTION	EMPLOYER	NUMBER	TRADE	HRS

JOB SAFETY

WAS A JOB SAFETY MEETING HELD THIS DATE? (If YES attach copy of the meeting minutes)	☐ YES	☐ NO	TOTAL WORK HOURS ON JOB SITE, THIS DATE, INCL CON'T SHEETS	
WERE THERE ANY LOST TIME ACCIDENTS THIS DATE? (If YES attach copy of completed OSHA report)	☐ YES	☐ NO	CUMULATIVE TOTAL OF WORK HOURS FROM PREVIOUS REPORT	
WAS CRANE/MANLIFT/TRENCHING/SCAFFOLD/HV ELEC/HIGH WORK/ HAZMAT WORK DONE? (If YES attach statement or checklist showing inspection performed.)	☐ YES	☐ NO		
WAS HAZARDOUS MATERIAL/WASTE RELEASED INTO THE ENVIRONMENT? (If YES attach description of incident and proposed action.)	☐ YES	☐ NO	TOTAL WORK HOURS FROM START OF CONSTRUCTION	

Schedule Activity No.	LIST SAFETY ACTIONS TAKEN TODAY/SAFETY INSPECTIONS CONDUCTED	☐ SAFETY REQUIREMENTS HAVE BEEN MET.

EQUIPMENT/MATERIAL RECEIVED TODAY TO BE INCORPORATED IN JOB (INDICATE SCHEDULE ACTIVITY NUMBER)

Schedule Activity No.	Submittal #	Description of Equipment/Material Received

CONSTRUCTION AND PLANT EQUIPMENT ON JOB SITE TODAY. INDICATE HOURS USED AND SCHEDULE ACTIVITY NUMBER.

Schedule Activity No.	Owner	Description of Construction Equipment Used Today (incl Make and Model)	Hours Used

Schedule Activity No.	REMARKS

CONTRACTOR/SUPERINTENDENT DATE

CONTRACTOR QUALITY CONTROL REPORT

(ATTACH ADDITIONAL SHEETS IF NECESSARY)

DATE	Enter (DD/MMM/YY)
REPORT NO	Enter Rpt # Here

PHASE	CONTRACT NO Enter Cnt# Here	CONTRACT TITLE Enter Title and Location of Construction Contract Here

PREPARATORY

WAS PREPARATORY PHASE WORK PREFORMED TODAY? YES ☐ NO ☐

IF YES, FILL OUT AND ATTACH SUPPLEMENTAL PREPARATORY PHASE CHECKLIST.

Schedule Activity No.	Definable Feature of Work	Index #

INITIAL

WAS INITIAL PHASE WORK PREFORMED TODAY? YES ☐ NO ☐

IF YES, FILL OUT AND ATTACH SUPPLEMENTAL INITIAL PHASE CHECKLIST.

Schedule Activity No.	Definable Feature of Work	Index #

FOLLOW-UP

WORK COMPLIES WITH CONTRACT AS APPROVED DURING INITIAL PHASE? YES ☐ NO ☐

WORK COMPLIES WITH SAFETY REQUIREMENTS? YES ☐ NO ☐

Schedule Activity No.	Description of Work, Testing Performed & By Whom, Definable Feature of Work, Specification Section, Location and List of Personnel Present

REWORK ITEMS IDENTIFIED TODAY (NOT CORRECTED BY CLOSE OF BUSINESS)

Schedule Activity No.	Description

REWORK ITEMS CORRECTED TODAY (FROM REWORK ITEMS LIST)

Schedule Activity No.	Description

REMARKS (Also Explain Any Follow-Up Phase Checklist Item From Above That Was Answered "NO"), Manuf. Rep On-Site, etc.

Schedule Activity No.	Description

On behalf of the contractor, I certify that this report is complete and correct and equipment and material used and work performed during this reporting period is in compliance with the contract drawings and specifications to the best of my knowledge except as noted in this report.

AUTHORIZED QC MANAGER AT SITE DATE

GOVERNMENT QUALITY ASSURANCE REPORT

DATE

QUALITY ASSURANCE REPRESENTATIVE'S REMARKS AND/OR EXCEPTIONS TO THE REPORT

Schedule Activity No.	Description

GOVERNMENT QUALITY ASSURANCE MANAGER DATE

THIS PAGE INTENTIONALLY LEFT BLANK

GOVERNMENT QUALITY ASSURANCE (QA) REPORT

(ATTACH ADDITIONAL SHEETS IF NECESSARY)

DATE	Enter Date (DD/MMM/YY)
REPORT NO	Enter Report # Here

CONTRACT NO	TITLE AND LOCATION
Enter Cnt# Here	Enter Title and Location of Construction Contract Here

Status

WORKING?	YES	NO	IF NO, WHY NOT:
	☐	☐	

WEATHER CONDITIONS:

Check Points

	YES	NO	REMARKS:
SUPERINTENDENT ON SITE	☐	☐	
QC MANAGER ON SITE	☐	☐	
QC REPORTS CURRENT	☐	☐	
AS-BUILTS CURRENT	☐	☐	
SUBMITTALS APPROVED FOR FOR ONGOING WORK	☐	☐	
DEFICIENCY LIST REVIEWED	☐	☐	

WORK OBSERVED/DEFICIENCIES NOTED/SAFETY ISSUES DISCUSSED/QA TESTS AND RESULTS:

Schedule Activity No	DESCRIBE OBSERVATIONS

MEETING/CONFERENCE NOTES (INCLUDING PARTICIPANTS):

Schedule Activity No.	NOTES

INSTRUCTIONS GIVEN OR RECEIVED/CONTROVERSIES PENDING:

Schedule Activity No.	INSTRUCTIONS/CONTROVERSIES

QA REPRESENTATIVE DATE

SUPV INITIALS DATE

THIS PAGE INTENTIONALLY LEFT BLANK

INITIAL PHASE CHECKLIST

SPEC SECTION	DATE
Enter Spec Section # Here	Enter Date (DD/MMM/YY)

CONTRACT NO	DEFINABLE FEATURE OF WORK	SCHEDULE ACT NO.	INDEX #
Enter Cnt# Here	Enter DFOW Here	Enter Sched Act ID Here	Enter Index# Here

PERSONNEL PRESENT

GOVERNMENT REP NOTIFIED _____ HOURS IN ADVANCE: YES ☐ NO ☐

NAME	POSITION	COMPANY/GOVERNMENT

PROCEDURE COMPLIANCE

IDENTIFIY FULL COMPLIANCE WITH PROCEDURES IDENTIFIED AT PREPARATORY. COORDINATE PLANS, SPECIFICATIONS, AND SUBMITTALS.

COMMENTS:

PRELIMINARY WORK

ENSURE PRELIMINARY WORK IS COMPLETE AND CORRECT. IF NOT, WHAT ACTION IS TAKEN?

WORKMANSHIP

ESTABLISH LEVEL OF WORKMANSHIP.

WHERE IS WORK LOCATED?

IS SAMPLE PANEL REQUIRED? YES ☐ NO ☐

WILL THE INIITAL WORK BE CONSIDERED AS A SAMPLE? YES ☐ NO ☐

(IF YES, MAINTAIN IN PRESENT CONDITION AS LONG AS POSSIBLE AND DESCRIBE LOCATION OF SAMPLE)

RESOLUTION

RESOLVE ANY DIFFERENCES.

COMMENTS:

CHECK SAFETY

REVIEW JOB CONDITIONS USING EM 385-1-1 AND JOB HAZARD ANALYSIS

COMMENTS:

OTHER

OTHER ITEMS OR REMARKS

QC MANAGER DATE

Instructions for Using Report Forms in MS-Word

In the Report Header, fields that have instructional text such as "Enter Title and Location of Construction Contract Here" prompt the user to enter the information in a specific location, governed by the field. Single mouse click anywhere in the field and the field will darken. Entry of text/data at this point will delete the instructional text in the field and will be replaced with entered text/data.

All check boxes are all defaulted as unchecked (i.e.; ☐). To check the box (i.e.; ☒), double click the box and the "Check Box Form Field Options" box will appear. In the "Default value" section of the box, click in the Radio Button for "Checked", then click on the "OK" button and the box will be checked.

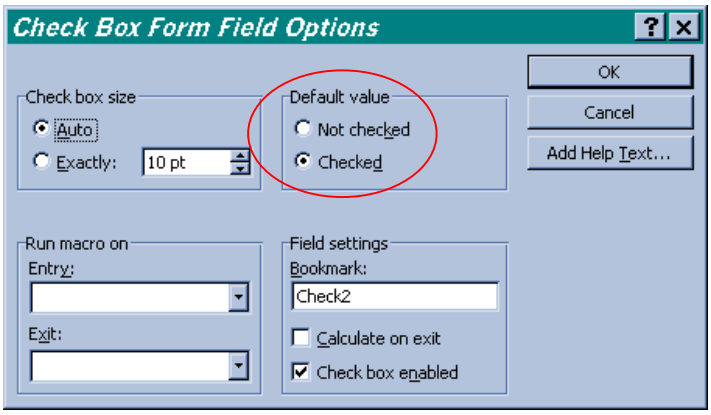

The "Hour" fields where intentionally not programmed to total. If the Contractor deleted the formula in a field within the range that was to be totaled, the total would be wrong.

With the ability to [unlimitedly] expand the Contractor Production Report and Contractor Quality Control Representative Report, their Continuation Sheets are obsolete.

In the footer of each form are data fields for the Sheet number and the total number of sheets in the report (Sheet 1 of 2). The first number will generate itself when pages of the report are added. But MS-Word will not automatically update the second number. To update the NumPages field, click the field or the field results and then press F9. You can also click **Options** in the **Tools** menu, click the **Print** tab, and then select the **Update fields** check box.

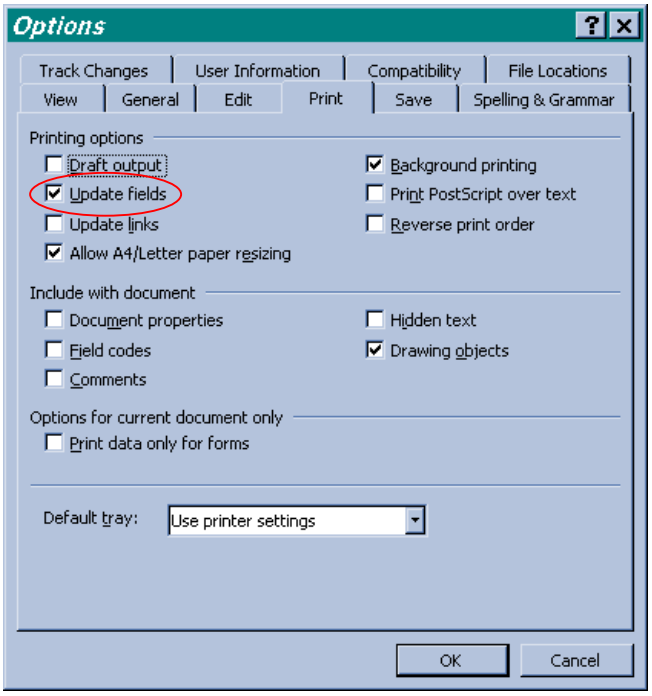

THIS PAGE INTENTIONALLY LEFT BLANK

PREPARATORY PHASE CHECKLIST

(CONTINUED ON SECOND PAGE)

SPEC SECTION	DATE
Enter Spec Section # Here	Enter Date (DD/MMM/YY)

CONTRACT NO	DEFINABLE FEATURE OF WORK	SCHEDULE ACT NO.	INDEX #
Enter Cnt# Here	Enter DFOW Here	Enter Sched Act ID Here	Enter Index# Here

PERSONNEL PRESENT

GOVERNMENT REP NOTIFIED _____ HOURS IN ADVANCE: YES ☐ NO ☐

NAME	POSITION	COMPANY/GOVERNMENT

SUBMITTALS

REVIEW SUBMITTALS AND/OR SUBMITTAL REGISTER. HAVE ALL SUBMITTALS BEEN APPROVED? YES ☐ NO ☐

IF NO, WHAT ITEMS HAVE NOT BEEN SUBMITTED? _____

ARE ALL MATERIALS ON HAND? YES ☐ NO ☐

IF NO, WHAT ITEMS ARE MISSING? _____

CHECK APPROVED SUBMITTALS AGAINST DELIVERED MATERIAL. (THIS SHOULD BE DONE AS MATERIAL ARRIVES.)

COMMENTS: _____

MATERIAL STORAGE

ARE MATERIALS STORED PROPERLY? YES ☐ NO ☐

IF NO, WHAT ACTION IS TAKEN? _____

SPECIFICATIONS

REVIEW EACH PARAGRAPH OF SPECIFICATIONS. _____

DISCUSS PROCEDURE FOR ACCOMPLISHING THE WORK. _____

CLARIFY ANY DIFFERENCES. _____

PRELIMINARY WORK & PERMITS

ENSURE PRELIMINARY WORK IS CORRECT AND PERMITS ARE ON FILE.

IF NOT, WHAT ACTION IS TAKEN? _____

TESTING	IDENTIFY TEST TO BE PERFORMED, FREQUENCY, AND BY WHOM.
	WHEN REQUIRED?
	WHERE REQUIRED?
	REVIEW TESTING PLAN.
	HAS TEST FACILITIES BEEN APPROVED?
SAFETY	ACTIVITY HAZARD ANALYSIS APPROVED? YES ☐ NO ☐ REVIEW APPLICABLE PORTION OF EM 385-1-1.
MEETING COMMENTS	NAVY/ROICC COMMENTS DURING MEETING.
OTHER ITEMS OR REMARKS	OTHER ITEMS OR REMARKS:

QC MANAGER DATE

RESPONSIBILITIES/AUTHORITY OF THE QC MANAGER

1. Appointing letter to the QC manager shall detail his/her authority and responsibility to act for the contractor and outline his/her duties, responsibilities and authority. He/she shall have no job-related responsibilities other than QC unless specifically permitted in the specification.

2. He/she shall be on the site at all times during progress of the work, with complete authority to take any action necessary to ensure conformance with the contract requirements. In the event of his/her absence, approved backup shall be on the site.

3. Authority to immediately stop any segment of work which does not comply with the contract plans and specifications and direct the removal and replacement of any defective work.

4. Conduct daily inspection of work performed for compliance with plans and specifications.

5. Certify daily that all materials and equipment delivered/installed in the work comply with contract plans and specifications. Certify daily that all work performed on the construction site and off the construction site conforms to plans and specifications. Report any deficiencies and remedial action planned and taken.

6. Supervise and coordinate the inspection and tests made by the members of the Quality Control Organization, including subcontractors.

7. Assure QC staff is adequate to meet its responsibilities.

8. Maintain a copy of the ROICC approved QC Plan on file at the jobsite complete with up-to-date approved revisions/filled-in log of submittals. Maintain at the jobsite an
up-to-date QC Submittal Register (provided in the specification) showing the status of all submittals required by the contract.

9. Maintain at the jobsite a testing plan showing status of all tests required by the contracts. Ensure that all tests required are performed and report the results of same. Indicate whether test results show the item tested conforms to contract requirements or not.

10. Authority to remove any individual from the site who fails to perform his/her work in a skillful and workmanlike manner or his/her work does not comply with the contract plans and specifications.

11. QC manager does not have authority to deviate from plans and specifications without prior approval, in writing, from the ROICC.

12. Ensure that the contractor's Quality Control Organization is adequately staffed with qualified personnel to perform all the detailed inspections and testing specified in the plans and specifications.

13. Maintain at the jobsite the up-to-date QC Rework Items List.

ATTACHMENT A

THIS PAGE INTENTIONALLY LEFT BLANK

REWORK ITEMS LIST

Contract No. and Title: Enter Contract # and Title Here

Contractor: Enter Contractor's Company Name Here

NUMBER	DATE IDENTIFIED	DESCRIPTION	CONTRACT REQUIREMENT (Spec. Section and Par. No., Drawing No. and Detail No., etc.)	ACTION TAKEN BY QC MANAGER	RESOLUTION	DATE COMPLETED

THIS PAGE INTENTIONALLY LEFT BLANK

TESTING PLAN AND LOG

CONTRACT NUMBER			PROJECT TITLE AND LOCATION							CONTRACTOR	
Enter Contract # Here			Enter Contract Title and Location Here							Enter Contractor's Company Name Here	
SPECIFICATION SECTION AND PARAGRAPH NUMBER	ITEM OF WORK	TEST REQUIRED	ACCREDITED/ APPROVED LAB		SAMPLED BY	TESTED BY	LOCATION OF TEST		DATE COMPLETED	DATE FORWARDED TO CONTR. OFF.	REMARKS
			YES	NO			ON SITE	OFF SITE			

THIS PAGE INTENTIONALLY LEFT BLANK

SECTION 01 50 00

TEMPORARY CONSTRUCTION FACILITIES AND CONTROLS
11/20, CHG 3: 08/24

PART 1 GENERAL

1.1 REFERENCES

The publications listed below form a part of this specification to the extent referenced. The publications are referred to within the text by the basic designation only.

NATIONAL FIRE PROTECTION ASSOCIATION (NFPA)

NFPA 70	(2026; TIA 26-1; ERTA 26-1; TIA 26-2; TIA 26-3; TIA 26-4; TIA 26-5; TIA 26-6; TIA 26-7; ERTA 26-2; ERTA 26-3) National Electrical Code
NFPA 241	(2022; ERTA 22-1) Standard for Safeguarding Construction, Alteration, and Demolition Operations

U.S. ARMY CORPS OF ENGINEERS (USACE)

EM 385-1-1	(2024) Safety -- Safety and Occupational Health (SOH) Requirements

U.S. FEDERAL HIGHWAY ADMINISTRATION (FHWA)

MUTCD	(2023) Manual on Uniform Traffic Control Devices

1.2 SUBMITTALS

Government approval is required for submittals with a "G" classification. Submittals not having a "G" classification are for Contractor Quality Control approval. Submit the following in accordance with Section 01 33 00 SUBMITTAL PROCEDURES:

SD-01 Preconstruction Submittals

Construction Site Plan; G

Traffic Control Plan; G

Haul Road Plan; G

Contractor Computer Cybersecurity Compliance Statements; G

Contractor Temporary Network Cybersecurity Compliance Statements; G

1.3 CONSTRUCTION SITE PLAN

Prior to the start of work, submit for Government approval a site plan showing the locations and dimensions of temporary facilities (including layouts and details, equipment and material storage area (onsite and

offsite), and access and haul routes, avenues of ingress/egress to the fenced area and details of the fence installation. Identify any areas which may have to be graveled to prevent the tracking of mud. Indicate if the use of a supplemental or other staging area is desired. Show locations of safety and construction fences, site trailers, construction entrances, trash dumpsters, temporary sanitary facilities, and worker parking areas.

1.4 CONDITION OF READINESS (COR) LEVELS FOR WEATHER

The Condition of Readiness (COR) is based on the weather forecast and the potential for sustained winds 50 knots (58 mph) or greater. Contact the Contracting Officer for the current COR.

Monitor weather conditions a minimum of twice a day and take appropriate actions according to the approved Emergency Plan in the accepted Accident Prevention Plan, EM 385-1-1 Emergency Plan requirements and the instructions below.

Unless otherwise directed by the Contracting Officer, comply with:

a. Condition FOUR (Sustained winds of 58 mph or greater expected within 72 hours): Normal daily jobsite cleanup and good housekeeping practices. Collect and store in piles or containers scrap lumber, waste material, and rubbish for removal and disposal at the close of each work day. Maintain the construction site including storage areas, free of accumulation of debris. Stack form lumber in neat piles less than 3.3 feet high. Remove all debris, trash, or objects that could become missile hazards. Review requirements pertaining to "Condition THREE" and continue action as necessary to attain "Condition FOUR" readiness. Contact Contracting Officer for weather and COR updates and completion of required actions.

b. Condition THREE (Sustained winds of 58 mph or greater expected within 48 hours): Maintain "Condition FOUR" requirements and commence securing operations necessary for "Condition ONE" which cannot be completed within 18 hours. Cease all routine activities which might interfere with securing operations. Commence securing and stow all gear and portable equipment. Make preparations for securing buildings. Reinforce or remove formwork and scaffolding. Secure machinery, tools, equipment, materials, or remove from the jobsite. Expend every effort to clear all missile hazards and loose equipment from general base areas. Contact Contracting Officer for weather and COR updates and completion of required actions. Review requirements pertaining to "Condition TWO" and continue action as necessary to attain "Condition THREE" readiness.

c. Condition TWO (Sustained winds of 58 mph or greater expected within 24 hours): Secure the jobsite, and leave Government premises.

d. Condition ONE. (Sustained winds of 58 mph or greater expected within 12 hours): Contractor access to the jobsite and Government premises is prohibited.

1.5 CYBERSECURITY DURING CONSTRUCTION

{For Reference Only: This subpart (and its subparts) relates to AC-18, SA-3, CCI-00258.} Meet the following requirements throughout the construction process.

1.5.1 Contractor Computer Equipment

Contractor owned computers may be used for construction. When used, contractor computers must meet the following requirements:

1.5.1.1 Operating System

The operating system must be an operating system currently supported by the manufacturer of the operating system. The operating system must be current on security patches and operating system manufacturer required updates.

1.5.1.2 Anti-Malware Software

The computer must run anti-malware software from a reputable software manufacturer. Anti-malware software must be a version currently supported by the software manufacturer, must be current on all patches and updates, and must use the latest definitions file. All computers used on this project must be scanned using the installed software at least once per day.

1.5.1.3 Passwords and Passphrases

The passwords and passphrases for all computers must be changed from their default values. Passwords must be a minimum of eight characters with a minimum of one uppercase letter, one lowercase letter, one number and one special character.

1.5.1.4 Contractor Computer Cybersecurity Compliance Statements

Provide a single submittal containing completed Contractor Computer Cybersecurity Compliance Statements for each company using contractor owned computers. Contractor Computer Cybersecurity Compliance Statements must use the template published at https://www.wbdg.org/dod/ufgs/ufgs-01-50-00. Each Statement must be signed by a cybersecurity representative for the relevant company.

1.5.2 Government Access to Network

Government personnel, as defined, prescribed, and identified by the Contracting Officer, must be allowed to have complete and immediate access to the network at any time in order to verify compliance with this specification. If there is a Government agency responsible for network access, identify that agency.

1.5.3 Passwords and Passphrases

The passwords and passphrases for all network devices and network access must be changed from their default values. Passwords must be a minimum 8 characters with a minimum of one uppercase letter, one lowercase letter, one number and one special character.

1.5.4 Contractor Temporary Network Cybersecurity Compliance Statements

Provide a single submittal containing completed Contractor Temporary Network Cybersecurity Compliance Statements for each company implementing a temporary IP network. Contractor Temporary Network Cybersecurity Compliance Statements must use the template published at https://www.wbdg.org/dod/ufgs/ufgs-01-50-00. Each Statement must be

signed by a cybersecurity representative for the relevant company. If no temporary IP networks will be used, provide a single copy of the Statement indicating this.

PART 2 PRODUCTS

2.1 TEMPORARY SIGNAGE

2.1.1 Bulletin Board

Prior to the commencement of work activities, provide a clear weatherproof covered bulletin board not less than 36 by 48 inches in size for displaying the Equal Employment Opportunity poster, a copy of the wage decision contained in the Contract, Wage Rate Information poster, Safety and Health Information as required by EM 385-1-1 and other information approved by the Contracting Officer. Coordinate requirements herein with 01 35 26 GOVERNMENTAL SAFETY REQUIREMENTS. Locate the bulletin board at the project site in a conspicuous place easily accessible to all employees, and in location as approved by the Contracting Officer.

2.1.2 Project Identification Signs

The requirements for the signs, their content, and location are as indicated. Erect signs within 15 days after receipt of the notice to proceed. Correct the data required by the safety sign daily, with light colored metallic or non-metallic numerals.

2.1.3 Warning Signs

Post temporary signs, tags, and labels to give workers and the public adequate warning and caution of construction hazards according to the EM 385-1-1. Attach signs to the perimeter fencing every 150 feet warning the public of the presence of construction hazards. Signs must require unauthorized persons to keep out of the construction site. Correct the data required by safety signs daily. Post signs at all points of entry designating the construction site as a hard hat area.

2.2 TEMPORARY TRAFFIC CONTROL

2.2.1 Haul Roads

Construct access and haul roads necessary for proper prosecution of the work under this Contract in accordance with EM 385-1-1. Construct with suitable grades and widths. Avoid sharp curves, blind corners, and dangerous cross traffic.. Submit haul road plan for approval. Provide necessary lighting, signs, barricades, and distinctive markings for the safe movement of traffic. The method of dust control, although optional, must be adequate to ensure safe operation at all times. Location, grade, width, and alignment of construction and haul roads are subject to approval by the Contracting Officer. Lighting must be adequate to assure full and clear visibility for full width of haul road and work areas during any night work operations.

2.2.2 Barricades

Erect and maintain temporary barricades to limit public access to hazardous areas. Barricades are required whenever safe public access to paved areas such as roads, parking areas or sidewalks is prevented by construction activities or as otherwise necessary to ensure the safety of

both pedestrian and vehicular traffic. Securely place barricades clearly visible with adequate illumination to provide sufficient visual warning of the hazard during both day and night.

2.3 FENCING

Provide fencing along the construction site and at all open excavations and tunnels to control access by unauthorized personnel. Safety fencing must be highly visible to be seen by pedestrians and vehicular traffic. All fencing must meet the requirements of EM 385-1-1. Remove the fence upon completion and acceptance of the work.

2.3.1 Post-Driven Chain Link Fencing

Temporary post-driven fencing must be galvanized chain link fencing 8 feet high supported by an tightly secured to galvanized steel posts driven below grade. Fence posts must be located on minimum 10 foot centers. Posts may be set in various surfaces such as sand, soil, asphalt or concrete as necessary. Chain link fencing must remain rigid and taut with a minimum of 200 pounds of force exerted on it from any direction with less than 4 inches of deflection. Completely remove fencing and posts at the completion of construction and restore surfaces disturbed or damaged to its original condition. Locate and identify underground utilities prior to setting fence posts. Equip fence with a lockable gate. Gate must remain locked when construction personnel are not present.

2.4 TEMPORARY WIRING

Provide temporary wiring in accordance with EM 385-1-1, NFPA 241 and NFPA 70. Include monthly inspection and testing of all equipment and apparatus.

PART 3 EXECUTION

3.1 EMPLOYEE PARKING

Construction Contract employees must park privately owned vehicles in an area designated by the Contracting Officer. Employee parking must not interfere with existing and established parking requirements of the Government installation.

3.2 AVAILABILITY AND USE OF UTILITY SERVICES

3.2.1 Temporary Utilities

Provide temporary utilities required for construction. Materials may be new or used, must be adequate for the required usage, not create unsafe conditions, and not violate applicable codes and standards.

3.2.2 Payment for Utility Services

a. The Government will make all reasonably required utilities available from existing outlets and supplies, as specified in the Contract. Unless otherwise provided in the Contract, the amount of each utility service consumed will be charged to or paid at prevailing rates charged to the Government or, where the utility is produced by the Government, at reasonable rates determined by the Contracting Officer. Carefully conserve utilities furnished without charge.

b. The point at which the Government will deliver such utilities or services and the quantity available is as indicated. Pay all costs incurred in connecting, converting, and transferring the utilities to the work. Make connections, including and providing transformers; and make disconnections. Under no circumstances will taps to base fire hydrants be allowed for obtaining domestic water.

c. The Contractor must provide their own utilities.

3.2.3 Meters and Temporary Connections

Provide and maintain necessary temporary connections, distribution lines, and meter bases (Government will provide meters) required to measure the amount of each utility used for the purpose of determining charges. Notify the Contracting Officer, in writing, 5 working days before final electrical connection is desired so that a utilities contract can be established. The Government will provide a meter and make the final hot connection after inspection and approval of the Contractor's temporary wiring installation. Do not make the final electrical connection.

3.2.4 Advance Deposit

An advance deposit for utilities consisting of an estimated month's usage or a minimum of $50.00 will be required. The last monthly bills for the fiscal year will normally be offset by the deposit and adjustments will be billed or returned as appropriate. Services to be rendered for the next fiscal year, beginning 1 October, will require a new deposit. Notification of the due date for this deposit will be mailed prior to the end of the current fiscal year.

3.2.5 Final Meter Reading

Before completion of the work and final acceptance of the work by the Government, notify the Contracting Officer, in writing, 5 working days before termination is desired. The Government will take a final meter reading, disconnect service, and remove the meters. Then remove all the temporary distribution lines, meter bases, and associated appurtenances. Pay all outstanding utility bills before final acceptance of the work by the Government.

3.2.6 Sanitation

Provide and maintain within the construction area minimum field-type sanitary facilities in accordance with EM 385-1-1. Locate the facilities behind the construction fence or out of the public view. Clean units and empty wastes at least once a week or more frequently into a municipal, district, or station sanitary sewage system, or remove waste to a commercial facility. Obtain approval from the system owner prior to discharge into a municipal, district, or commercial sanitary sewer system. Penalties or fines associated with improper discharge will be the responsibility of the Contractor. Coordinate with the Contracting Officer and follow station regulations and procedures when discharging into the station sanitary sewer system. Maintain these conveniences at all times. Include provisions for pest control and elimination of odors. Government toilet facilities will not be available to Contractor's personnel.

3.2.7 Telephone

Make arrangements and pay all costs for telephone facilities desired.

3.2.8 Fire Protection

Provide temporary fire protection equipment for the protection of personnel and property during construction. Remove debris and flammable materials daily to minimize potential hazards.

3.3 TRAFFIC PROVISIONS

3.3.1 Maintenance of Traffic

a. Conduct operations in a manner that will not close a thoroughfare or interfere with traffic on railways or highways except with written permission of the Contracting Officer at least 15 calendar days prior to the proposed modification date, and provide a Traffic Control Plan for Government approval detailing the proposed controls to traffic movement for approval. The plan must be in accordance with State and local regulations and the MUTCD, Part VI. Make all notifications and obtain all permits required for modification to traffic movements outside Station's jurisdiction.. Contractor may move oversized and slow-moving vehicles to the worksite provided requirements of the highway authority have been met.

b. Conduct work so as to minimize obstruction of traffic, and maintain traffic on at least half of the roadway width at all times. Obtain approval from the Contracting Officer prior to starting any activity that will obstruct traffic.

c. Provide, erect, and maintain, at Contractor's expense, lights, barriers, signals, passageways, detours, Life Safety Signage, overhead protection, and other items that may be required by the authority having jurisdiction.

d. Provide cones, signs, barricades, lights, or other traffic control devices and personnel required to control traffic. Do not use foil-backed material for temporary pavement marking because of its potential to conduct electricity during accidents involving downed power lines.

3.3.2 Protection of Traffic

Maintain and protect traffic on all affected roads during the construction period except as otherwise specifically directed by the Contracting Officer. Measures for the protection and diversion of traffic, including the provision of watchmen and flagmen, erection of barricades, placing of lights around and in front of equipment the work, and the erection and maintenance of adequate warning, danger, and direction signs, will be as required by the State and local authorities having jurisdiction. Provide self-illuminated (lighted) barricades during hours of darkness. All personnel working in roadways will wear brightly-colored vests or other high visibility apparel in accordance with EM 385-1-1. Protect the traveling public from damage to person and property. Minimize the interference with public traffic on roads selected for hauling material to and from the site. Investigate the adequacy of existing roads and their allowable load limit. Contractor is responsible for the repair of damage to roads caused by construction operations.

3.3.3 Rush Hour Restrictions

Do not interfere with the peak traffic flows preceding and during normal operations without notification to and approval by the Contracting Officer.

3.4 CONTRACTOR'S TEMPORARY FACILITIES

Contractor is responsible for security of their property. Provide adequate outside security lighting at the temporary facilities. Trailers must be anchored to resist high winds and meet applicable state or local standards for anchoring mobile trailers. Coordinate anchoring with EM 385-1-1. The Contract Clause entitled "FAR 52.236-10, Operations and Storage Areas" and the following apply:

3.4.1 Storage Area

Construct a temporary 6 foot high chain link fence around trailers and materials. Include plastic strip inserts, colored green, so that visibility through the fence is obstructed. Fence posts may be driven, in lieu of concrete bases, where soil conditions permit. Do not place or store trailers, materials, or equipment outside the fenced area unless such trailers, materials, or equipment are assigned a separate and distinct storage area by the Contracting Officer away from the vicinity of the construction site but within the installation boundaries. Trailers, equipment, or materials must not be open to public view with the exception of those items which are in support of ongoing work on the current day. Do not stockpile materials outside the fence in preparation for the next day's work. Park mobile equipment, such as tractors, wheeled lifting equipment, cranes, trucks, and like equipment within the fenced area at the end of each work day.

Keep fencing in a state of good repair and proper alignment. If the Contractor elects to traverse grassed or unpaved areas which are not established roadways with construction equipment or other vehicles, cover the grassed or unpaved areas with a layer of gravel as necessary to prevent rutting and the tracking of mud onto paved or established roadways; gravel gradation must be at the Contractor's discretion. Mow and maintain grass located within the boundaries of the construction site for the duration of the project. Grass and vegetation along fences, structures, under trailers, and in areas not accessible to mowers must be edged or trimmed neatly.

3.4.2 Supplemental Storage Area

Upon request, and pending availability, the Contracting Officer will designate another or supplemental area for the use and storage of trailers, equipment, and materials. This area may not be in close proximity of the construction site but will be within the installation boundaries. Maintain the area in a clean and orderly fashion and secured if needed to protect supplies and equipment. Utilities will not be provided to this area by the Government.

3.4.3 Appearance of Trailers

a. Trailers must be roadworthy and comply with all appropriate state and local vehicle requirements. Trailers which are rusted, have peeling paint or are otherwise in need of repair will not be allowed on Installation property. Trailers must present a clean and neat exterior

appearance and be in a state of good repair.

b. Maintain the temporary facilities. Failure to do so will be sufficient reason to require their removal at the Contractor's expense.

3.4.4 Trailers or Storage Buildings

a. Trailers or storage buildings will be permitted, where space is available, subject to the approval of the Contracting Officer.

b. Mount a sign not smaller than 13.78 by 13.78 inches on the trailer or building that shows the company name, business phone number, emergency phone number and conforms to the following requirements and sketch:

Graphic panel	Aluminum, painted blue
Copy	Screen painted or vinyl die-cut, white
Typeface	Univers 65 u/lc
See Sketch No. 01500 (graphic).	

3.4.5 Safety Systems

Protect the integrity of all installed safety systems or personnel safety devices. Obtain prior approval from the Contracting Officer if entrance into systems serving safety devices is required. If it is temporarily necessary to remove or disable personnel safety devices in order to accomplish Contract requirements, provide alternative means of protection prior to removing or disabling any permanently installed safety devices or equipment and obtain approval from the Contracting Officer.

3.4.6 Weather Protection of Temporary Facilities and Stored Materials

Take necessary precautions to ensure that roof openings and other critical openings in the building are monitored carefully. Take immediate actions required to seal off such openings when rain or other detrimental weather is imminent, and at the end of each workday. Ensure that the openings are completely sealed off to protect materials and equipment in the building from damage.

3.4.6.1 Building and Site Storm Protection

When a warning of gale force winds is issued, take precautions to minimize danger to persons, and protect the work and nearby Government property. Precautions must include, but are not limited to, closing openings; removing loose materials, tools and equipment from exposed locations; and removing or securing scaffolding and other temporary work. Close openings in the work when storms of lesser intensity pose a threat to the work or any nearby Government property.

3.5 TEMPORARY PROJECT SAFETY FENCING

As soon as practicable, but not later than 15 days after the date established for commencement of work, furnish and erect temporary project safety fencing at the work site. Maintain the safety fencing during the life of the Contract and, upon completion and acceptance of the work,

remove from the work site.

3.6 CLEANUP

Remove construction debris, waste materials, packaging material and the like from the work site daily. Any dirt or mud which is tracked onto paved or surfaced roadways must be cleaned away. Store all salvageable materials resulting from demolition activities within the fenced area described above or at the supplemental storage area. Neatly stack stored materials not in trailers, whether new or salvaged.

3.7 RESTORATION OF STORAGE AREA

Upon completion of the project remove the bulletin board, signs, barricades, haul roads, and all other temporary products from the site. After removal of trailers, materials, and equipment from within the fenced area, remove the fence. Restore areas used during the performance of the Contract to the original or better condition. Remove gravel used to traverse grassed areas and restore the area to its original condition, including top soil and seeding as necessary.

-- End of Section --

SECTION 01 57 19

TEMPORARY ENVIRONMENTAL CONTROLS
08/22, CHG 2: 08/25

PART 1 GENERAL

1.1 REFERENCES

The publications listed below form a part of this specification to the extent referenced. The publications are referred to within the text by the basic designation only.

U.S. ENVIRONMENTAL PROTECTION AGENCY (EPA)

EPA SW-846	(Third Edition; Update VII) Test Methods for Evaluating Solid Waste: Physical/Chemical Methods

U.S. NATIONAL ARCHIVES AND RECORDS ADMINISTRATION (NARA)

29 CFR 1910.1200	Hazard Communication
40 CFR 60	Standards of Performance for New Stationary Sources
40 CFR 63	National Emission Standards for Hazardous Air Pollutants for Source Categories
40 CFR 64	Compliance Assurance Monitoring
40 CFR 241	Guidelines for Disposal of Solid Waste
40 CFR 243	Guidelines for the Storage and Collection of Residential, Commercial, and Institutional Solid Waste
40 CFR 258	Subtitle D Landfill Requirements
40 CFR 260	Hazardous Waste Management System: General
40 CFR 261	Identification and Listing of Hazardous Waste
40 CFR 261.7	Residues of Hazardous Waste in Empty Containers
40 CFR 262	Standards Applicable to Generators of Hazardous Waste
40 CFR 262.11	Hazardous Waste Determination and Recordkeeping
40 CFR 262.34	Standards Applicable to Generators of Hazardous Waste-Accumulation Time
40 CFR 263	Standards Applicable to Transporters of Hazardous Waste

40 CFR 264	Standards for Owners and Operators of Hazardous Waste Treatment, Storage, and Disposal Facilities
40 CFR 265	Interim Status Standards for Owners and Operators of Hazardous Waste Treatment, Storage, and Disposal Facilities
40 CFR 266	Standards for the Management of Specific Hazardous Wastes and Specific Types of Hazardous Waste Management Facilities
40 CFR 268	Land Disposal Restrictions
40 CFR 273	Standards for Universal Waste Management
40 CFR 273.2	Standards for Universal Waste Management - Batteries
40 CFR 273.4	Standards for Universal Waste Management - Mercury Containing Equipment
40 CFR 273.5	Standards for Universal Waste Management - Lamps
40 CFR 273.6	Applicability - Aerosol Cans
40 CFR 279	Standards for the Management of Used Oil
40 CFR 372	Toxic Chemical Release Reporting
49 CFR 171	General Information, Regulations, and Definitions
49 CFR 172	Hazardous Materials Table, Special Provisions, Hazardous Materials Communications, Emergency Response Information, and Training Requirements
49 CFR 173	Shippers - General Requirements for Shipments and Packagings
49 CFR 178	Specifications for Packagings

1.2 DEFINITIONS

1.2.1 Class I and II Ozone Depleting Substance (ODS)

Class I ODS is defined in Section 602(a) of The Clean Air Act. A list of Class I ODS can be found on the EPA website at the following weblink. https://www.epa.gov/ozone-layer-protection/ozone-depleting-substances.

Class II ODS is defined in Section 602(s) of The Clean Air Act. A list of Class II ODS can be found on the EPA website at the following weblink. https://www.epa.gov/ozone-layer-protection/ozone-depleting-substances.

1.2.2 Contractor Generated Hazardous Waste

Contractor generated hazardous waste is materials that, if abandoned or disposed of, may meet the definition of a hazardous waste. These waste streams would typically consist of material brought on site by the Contractor to execute work, but are not fully consumed during the course of construction. Examples include, but are not limited to, excess paint thinners (i.e., methyl ethyl ketone, toluene), waste thinners, excess paints, excess solvents, waste solvents, excess pesticides, and contaminated pesticide equipment rinse water.

1.2.3 Electronics Waste

Electronics waste is discarded electronic devices intended for salvage, recycling, or disposal.

1.2.4 Environmental Pollution and Damage

Environmental pollution and damage is the presence of chemical, physical, or biological elements or agents which adversely affect human health or welfare; unfavorably alter ecological balances of importance to human life; affect other species of importance to humankind; or degrade the environment aesthetically, culturally or historically.

1.2.5 Environmental Protection

Environmental protection is the prevention/control of pollution and habitat disruption that may occur to the environment during construction. The control of environmental pollution and damage requires consideration of land, water, and air; biological and cultural resources; and includes management of visual aesthetics; noise; solid, chemical, gaseous, and liquid waste; radiant energy and radioactive material as well as other pollutants.

1.2.6 Hazardous Debris

As defined in paragraph SOLID WASTE, debris that contains listed hazardous waste (either on the debris surface, or in its interstices, such as pore structure) in accordance with 40 CFR 261. Hazardous debris also includes debris that exhibits a characteristic of hazardous waste in accordance with 40 CFR 261.

1.2.7 Hazardous Materials

Hazardous material is any material that: Is defined in 49 CFR 171, listed in 49 CFR 172, regulated as a hazardous material in accordance with 49 CFR 173; or requires a Safety Data Sheet (SDS) in accordance with 29 CFR 1910.1200; or during end use, treatment, handling, packaging, storage, transportation, or disposal meets or has components that meet or have potential to meet the definition of a hazardous waste as defined by 40 CFR 261 Subparts A, B, C, or D. Designation of a material by this definition, when separately regulated or controlled by other sections or directives, does not eliminate the need for adherence to that hazard-specific guidance which takes precedence over this section for "control" purposes. Such material includes ammunition, weapons, explosive actuated devices, propellants, pyrotechnics, chemical and biological warfare materials, medical and pharmaceutical supplies, medical waste and infectious materials, bulk fuels, radioactive materials, and other materials such as asbestos, mercury, and polychlorinated biphenyls (PCBs).

1.2.8 Hazardous Waste

Hazardous Waste is any material that meets the definition of a solid waste and exhibits a hazardous characteristic (ignitability, corrosivity, reactivity, or toxicity) as specified in 40 CFR 261, Subpart C, or contains a listed hazardous waste as identified in 40 CFR 261, Subpart D, or meets a state, local, or host nation definition of a hazardous waste.

1.2.9 Land Application

Land Application means spreading or spraying discharge water at a rate that allows the water to percolate into the soil. No sheeting action, soil erosion, discharge into storm sewers, discharge into defined drainage areas, or discharge into the "waters of the United States" must occur. Comply with federal, state, and local laws and regulations.

1.2.10 Municipal Separate Storm Sewer System (MS4) Permit

MS4 permits are those held by municipalities or installations to obtain NPDES permit coverage for their stormwater discharges.

1.2.11 National Pollutant Discharge Elimination System (NPDES)

The NPDES permit program controls water pollution by regulating point sources that discharge pollutants into waters of the United States.

1.2.12 Oily Waste

Oily waste are those materials that are, or were, mixed with Petroleum, Oils, and Lubricants (POLs) and have become separated from that POLs. Oily wastes also means materials, including wastewaters, centrifuge solids, filter residues or sludges, bottom sediments, tank bottoms, and sorbents which have come into contact with and have been contaminated by, POLs and may be appropriately tested and discarded in a manner which is in compliance with other state and local requirements.

This definition includes materials such as oily rags, "kitty litter" sorbent clay and organic sorbent material. These materials may be land filled provided that: It is not prohibited in other state regulations or local ordinances; the amount generated is "de minimus" (a small amount); it is the result of minor leaks or spills resulting from normal process operations; and free-flowing oil has been removed to the practicable extent possible. Large quantities of this material, generated as a result of a major spill or in lieu of proper maintenance of the processing equipment, are a solid waste. As a solid waste, perform a hazardous waste determination prior to disposal. As this can be an expensive process, it is recommended that this type of waste be minimized through good housekeeping practices and employee education.

1.2.13 Regulated Waste

Regulated waste are solid wastes that have specific additional federal, state, or local controls for handling, storage, or disposal.

1.2.14 Sediment

Sediment is soil and other debris that have eroded and have been transported by runoff water or wind.

1.2.15 Solid Waste

Solid waste is a solid, liquid, semi-solid or contained gaseous waste. A solid waste can be a hazardous waste, non-hazardous waste, or non-Resource Conservation and Recovery Act (RCRA) regulated waste. Types of solid waste typically generated at construction sites may include:

1.2.15.1 Debris

Debris is non-hazardous solid material generated during the construction, demolition, or renovation of a structure that exceeds 2.5-inch particle size that is: a manufactured object; plant or animal matter; or natural geologic material (for example, cobbles and boulders), broken or removed concrete, masonry, and rock asphalt paving; ceramics; roofing paper and shingles. Inert materials may be reinforced with or contain ferrous wire, rods, accessories and weldments. A mixture of debris and other material such as soil or sludge is also subject to regulation as debris if the mixture is comprised primarily of debris by volume, based on visual inspection.

1.2.15.2 Green Waste

Green waste is the vegetative matter from landscaping, land clearing and grubbing, including, but not limited to, grass, bushes, scrubs, small trees and saplings, tree stumps and plant roots. Marketable trees, grasses and plants that are indicated to remain, be re-located, or be re-used are not included.

1.2.15.3 Material Not Regulated As Solid Waste

Material not regulated as solid waste is nuclear source or byproduct materials regulated under the Federal Atomic Energy Act of 1954 as amended; suspended or dissolved materials in domestic sewage effluent or irrigation return flows, or other regulated point source discharges; regulated air emissions; and fluids or wastes associated with natural gas or crude oil exploration or production.

1.2.15.4 Non-Hazardous Waste

Non-hazardous waste is waste that is excluded from, or does not meet, hazardous waste criteria in accordance with 40 CFR 261.

1.2.15.5 Recyclables

Recyclables are materials, equipment and assemblies such as doors, windows, door and window frames, plumbing fixtures, glazing and mirrors that are recovered and sold as recyclable, wiring, insulated/non-insulated copper wire cable, and structural components. It also includes commercial-grade refrigeration equipment with Freon removed, household appliances where the basic material content is metal, clean polyethylene terephthalate bottles, cooking oil, used fuel oil, textiles, high-grade paper products and corrugated cardboard, stackable pallets in good condition, clean crating material, and clean rubber/vehicle tires. Metal meeting the definition of "lead contaminated" or "lead based paint contaminated" may be included as recyclable only if the metal is handled and transported in accordance with regulations, and the facility receiving the material is permitted and authorized to accept and process lead contaminated materials. Paint cans that meet the definition of empty

containers in accordance with 40 CFR 261.7 may be included as recyclable if sold to a scrap metal company.

1.2.15.6 Surplus Soil

Surplus soil is existing soil that is in excess of what is required for this work, including aggregates intended, but not used, for on-site mixing of concrete, mortars, and paving. Contaminated soil meeting the definition of hazardous material or hazardous waste is not included and must be managed in accordance with paragraph HAZARDOUS MATERIAL MANAGEMENT.

1.2.15.7 Scrap Metal

This includes scrap and excess ferrous and non-ferrous metals such as reinforcing steel, structural shapes, pipe, and wire that are recovered or collected and disposed of as scrap. Scrap metal meeting the definition of hazardous material or hazardous waste is not included.

1.2.15.8 Wood

Wood is dimension and non-dimension lumber, plywood, chipboard, hardboard. Treated or painted wood that meets the definition of lead contaminated or lead based contaminated paint is not included. Treated wood includes, but is not limited to, lumber, utility poles, crossties, and other wood products with chemical treatment.

1.2.16 Surface Discharge

Surface discharge means discharge of water into drainage ditches, storm sewers, or creeks meeting the definition of "waters of the United States". Surface discharges from construction sites are discrete, identifiable sources and require a permit from the governing agency. Comply with federal, state, and local laws and regulations.

1.2.17 Wastewater

Wastewater is the aqueous liquid waste generated by a project, to include both domestic wastewater (sewage) and industrial wastewater.

1.2.17.1 Stormwater

Stormwater is any precipitation in an urban or suburban area that does not evaporate or soak into the ground, but instead collects and flows into storm drains, rivers, and streams.

1.2.18 Waters of the United States

Waters of the United States means Federally jurisdictional waters, including wetlands, that are subject to regulation under Section 404 of the Clean Water Act or navigable waters, as defined under the Rivers and Harbors Act.

1.2.19 Wetlands

Wetlands are those areas that are inundated or saturated by surface or groundwater at a frequency and duration sufficient to support, and that under normal circumstances do support, a prevalence of vegetation typically adapted for life in saturated soil conditions.

1.2.20 Universal Waste

The universal waste regulations streamline collection requirements for certain hazardous wastes in the following categories: batteries, pesticides, mercury-containing equipment (for example, thermostats), and lamps (for example, fluorescent bulbs). The rule is designed to reduce hazardous waste in the municipal solid waste (MSW) stream by making it easier for universal waste handlers to collect these items and send them for recycling or proper disposal. These regulations can be found at 40 CFR 273.

1.3 SUBMITTALS

Government approval is required for submittals with a "G" classification. Submittals not having a "G" classification are for Contractor Quality Control approval. Submit the following in accordance with Section 01 33 00 SUBMITTAL PROCEDURES:

SD-01 Preconstruction Submittals

Contractor Hazardous Material Inventory Log; G

Preconstruction Survey

Regulatory Notifications

Environmental Manager Qualifications

Employee Training Records

Environmental Protection Plan; G

Dirt and Dust Control Plan

Solid Waste Management Permit

SD-06 Test Reports

Monthly Solid Waste Disposal Report; G

Laboratory Analysis

SD-07 Certificates

ECATTS Certificate Of Completion; G

Employee Training Records; G

Erosion and Sediment Control Inspector Qualifications

SD-11 Closeout Submittals

Contractor Hazardous Material Inventory Log; G

Regulatory Notifications; G

Assembled Employee Training Records; G

Solid Waste Management Permit; G

Waste Determination Documentation; G

Project Solid Waste Disposal Documentation Report; G

Sales Documentation; G

Contractor Certification

Hazardous Waste/Debris Management; G

Disposal Documentation for Hazardous and Regulated Waste; G

1.4 ENVIRONMENTAL PROTECTION REQUIREMENTS

Provide and maintain, during the life of the contract, environmental protection as defined. Plan for and provide environmental protective measures to control pollution that develops during construction practice. Plan for and provide environmental protective measures required to correct conditions that develop during the construction of permanent or temporary environmental features associated with the project. Protect the environmental resources within the project boundaries and those affected outside the limits of permanent work during the entire duration of this Contract. Comply with federal, state, and local regulations pertaining to the environment, including water, air, solid waste, hazardous waste and substances, oily substances, and noise pollution.

Tests and procedures assessing whether construction operations comply with Applicable Environmental Laws may be required. Analytical work must be performed by qualified laboratories; and where required by law, the laboratories must be certified.

1.4.1 Training in Environmental Compliance Assessment Training and Tracking System (ECATTS)

1.4.1.1 Personnel Requirements

The Environmental Manager is responsible for environmental compliance on projects. The Environmental Manager and other staff, must complete applicable ECATTS training modules (installation specific or general) prior to starting respective portions of on-site work under this Contract. If personnel changes occur for any of these positions after starting work, replacement personnel must complete applicable ECATTS training within 14 days of assignment to the project.

Personnel ECATTS Training certifications are valid for three years, then personnel are required to refresh training certificates. If the contract surpasses 3 years, all personnel must be re-certified.

1.4.1.2 Certification

Submit an ECATTS certificate of completion for personnel who have completed the required ECATTS training. This training is web-based and can be accessed from any computer with Internet access using the following instructions.

Register for NAVFAC Environmental Compliance Assessment, Training, and Tracking System, by logging on to https://environmentaltraining.ecatts.com/. Obtain the password for registration from the Contracting Officer.

1.4.1.3 Refresher Training

This training has been structured to allow contractor personnel to receive credit under this contract and to carry forward credit to future contracts. Ensure the Environmental Manager review their training plans for new modules or updated training requirements prior to beginning work. Some training modules are tailored for specific state regulatory requirements; therefore, Contractors working in multiple states will be required to retake modules tailored to the state where the contract work is being performed.

1.4.2 Conformance with the Environmental Management System

Perform work under this contract consistent with the policy and objectives identified in the installation's Environmental Management System (EMS). Perform work in a manner that conforms to objectives and targets of the environmental programs and operational controls identified by the EMS. Support Government personnel when environmental compliance and EMS audits are conducted by escorting auditors at the Project site, answering questions, and providing proof of records being maintained. Provide monitoring and measurement information as necessary to address environmental performance relative to environmental, energy, and transportation management goals. In the event an EMS nonconformance or environmental noncompliance associated with the contracted services, tasks, or actions occurs, take corrective and preventative actions. In addition, employees must be aware of their roles and responsibilities under the installation EMS and of how these EMS roles and responsibilities affect work performed under the contract.

Coordinate with the installation's EMS coordinator to identify training needs associated with environmental aspects and the EMS, and arrange training or take other action to meet these needs. Provide training documentation to the Contracting Officer. The Installation Environmental Office will retain associated environmental compliance records. Make EMS Awareness training completion certificates available to Government auditors during EMS audits and include the certificates in the Employee Training Records. See paragraph EMPLOYEE TRAINING RECORDS.

1.5 SPECIAL ENVIRONMENTAL REQUIREMENTS

Comply with the special environmental requirements listed here and attached at the end of this section.

1.5.1 Mid-Atlantic

Comply with the following state, regional, and local requirements.

1.5.1.1 Virginia

1.5.1.1.1 Definition and Disposal Requirements of Empty Paint Cans

Paint Cans: Paint cans that are empty (free of liquids and as defined in 40 CFR 261.7) of paints, solvents, thinners and adhesives may be disposed of in dumpsters.

Metal paint cans that meet the empty standard can be placed in dumpsters marked "metal only"; plastic cans may be placed in solid waste dumpsters. Manage paint cans with liquid or more than one inch of solidified

oil-based paint as a hazardous waste and label properly. Manage paint cans with excess water-based paint as non-hazardous waste provided that they do not contain free liquids or contain any substance with a hazardous characteristic as defined in 40 CFR 261. Contact NAVFAC MIDLANT Environmental Services for management requirements.

1.5.1.1.2 Hazardous Waste Requirements for Virginia Installations

1.5.1.1.2.1 Demolition

Remove the following items from the site prior to demolition: polychlorinated biphenyls (PCBs), fluorescent bulbs, mercury and metal components (such as furnaces, ducts, and piping), and any hazardous materials. Manage lead, fluorescent bulbs, mercury-containing equipment, and any other waste as "hazardous or universal waste" as appropriate (see paragraph HAZARDOUS AND UNIVERSAL WASTE GENERATION).

1.5.1.1.2.2 Hazardous and Universal Waste Generation

Hazardous and Universal Waste includes fluorescent bulbs, PCB ballast, lead paint, and mercury-containing equipment. Contact the EV HW Program Manager to set up an appropriate accumulation area. Manage waste in a satellite accumulation area (SAA), hazardous waste accumulation area (HWAA), or universal waste accumulation area (UWAA) as directed by the EV HW Program Manager through the Contracting Officer. Keep containers securely closed unless adding or removing material and waste. Ensure custodians managing the accumulation area(s) have appropriate training that has been taken within the year prior to the area being established. Training is an annual requirement that can be taken on the https://environmentaltraining.ecatts.com/ site. Keep copies of training records and certificates on site.

Hazardous Waste Accumulation Areas (less than 90-day sites) require Virginia Department of Environmental Quality (VDEQ) notification. Notify the HA Media Manager (HW MM) 14 days prior to the start of waste accumulation. The EV HW Program Manager is authorized to notify VDEQ when Hazardous Waste Accumulation Areas are established. A copy of the Activity Hazardous Material Reutilization, Hazardous Waste Minimization and Disposal Guide will be provided by the Contracting Officer. For waste disposal, phone the NAVFAC MIDLANT EV Service Desk to arrange pick up in your area. Fax a completed DD 1348-1A to the Service Desk for all waste turn-ins. Notify the Service Desk if any containers are leaking or are in poor condition. A representative from NAVFAC MIDLANT EV Services is the authorized entity approved to sign manifests for off-site waste disposal.

1.5.1.1.2.3 Waste Management - Disposal by the Contractor

Manage and dispose of all Hazardous Waste generated or discovered during the project. Dispose of all waste in accordance with all federal and state environmental regulations. Sign and submit all paperwork (lab analyses, profiles, manifests) and records to the Navy. Allow inspection by the Regional Environmental Core for compliance with federal, state and Navy requirements.

1.5.1.1.2.3.1 Contractor Site Custodian

a. Designate a Site Custodian and an Alternate for waste management. Provide 24-hour phone numbers where Site Custodian and alternate can be contacted in the event of an emergency.

b. Personnel must be trained in hazardous waste management procedures to comply with the requirements of 40 CFR 262.34 and 40 CFR 265.16.

1.5.1.1.2.3.2 Waste Accumulation

a. Establish a SAA, UWAA or a temporary 90-Day HWAA for waste accumulation. Obtain the HW Media Manager approval. Do not use accumulation areas as lay-down areas.

b. EV Core HW MM will notify VDEQ. Notify the HW MM 14 days prior to the start of waste accumulation. All agency notifications will originate from the Regional Environmental Core.

c. The Site Custodian and Alternate must attend the HW MM training session for the management of the SAA, UWAA or HWAA.

1.5.1.1.2.3.3 Waste Disposal

a. The Navy will be considered the "generator" for all wastes that are generated on Navy property, regardless if the waste was generated as result of Contractor activity.

b. Pack, mark, label and transport all waste in accordance with Department of Transportation 49 CFR Regulations.

c. Obtain the EPA Hazardous Waste Identification Number (EPA ID#) for the installation or off-site Contractor location, from the EV Core HW MM. Use the generator's EPA ID# on the Hazardous Waste Manifest.

(1) Provide the name and EPA ID Number for the Hazardous Waste Transporter and the disposal facility to the HW MM.

(2) Submit all waste profiles and documentation supporting the waste disposal to the HW MM for review.

d. Obtain the Hazardous Waste Manifest signature from designated representative of the Regional Environmental Services Group (EV Services). Contact the Environmental Services Department Dispatcher to schedule this service. Obtain signature on the day the waste is scheduled to be picked up.

e. The Contractor is to ensure that the Certificates of Disposal and Manifests are mailed to EV Services, in accordance with the all Federal and State regulations.

1.5.1.1.2.4 Excavation

If soil is to be reused onsite, sampling is not required unless otherwise directed. Excavated soil may be reused within the construction site with no testing necessary. Soil may be stockpiled until the end of the project, then reused as much as possible prior to sampling and analysis for residual soil to be disposed. Store in a manner that prevents rain from infiltrating the soil matrix and preventing runoff into the surrounding soil or pavement (for example, store the soil on top of plastic sheets and covered with plastic sheets or store in lined, covered dumpsters). If the soil is going to be relocated or disposed outside the construction site, sampling and analysis is required. Contact the installation HW Program Manager prior to disposal to determine the

appropriate sampling and test parameter. Soil disposal requirements will depend on test results. If soil is to be shipped to a destination outside the fire ant quarantine area (outside of James City County, York County, Chesapeake, Hampton, Newport News, Norfolk, Poquoson, Portsmouth, Suffolk, Virginia Beach, or Williamsburg) it MUST have a valid inspection certificate issued by an Officer of the Plant Protection and Quarantine Program (PPQ) of the U.S. Department of Agriculture. Contact the EV Pest Management Coordinator for additional information.

1.5.1.1.2.5 Painting and Paint Removal

Air-drying cans for disposal are allowed only if liquid residue is less than one inch; keep all paint or solvent containers closed and secured when not adding or removing material or waste. Waste paint chips and debris must be collected and sampled to determine the proper disposal method. Contact the NAVFAC MIDLANT EV HW Program Manager for sampling requirements. If waste paint is determined to be hazardous, waste must be managed as hazardous and an appropriate accumulation area must be established. Contact the NAVFAC MIDLANT EV HW Program Manager for site setup.

1.5.1.1.2.6 Dumpsters

Label trash containers to appropriately describe the contents.

1.5.1.1.3 Air Requirements

1.5.1.1.3.1 Concrete Crushing

Secure an air permit for the crusher from the regulatory agency where the equipment is home-based (in Virginia contact VADEQ). Provide a copy of the permit to the EV Office (Air Program Manager) through the Contracting Officer at least 30 days prior to bringing crusher onsite.

1.5.1.1.4 Spill Response and Reporting

Report spills at Hampton Roads Navy installations to the appropriate installation Emergency Call Center (ECC) immediately upon discovery.

After notifying the installation ECC, notify the Navy point of contact. Refer to the Installation Hazardous Material Reutilization, Hazardous Waste Minimization and Disposal Guide Appendix 3 for spill contact procedures. Refer to Table 1 - Spill Reporting Contact Number for the appropriate point of contact.

1.6 QUALITY ASSURANCE

1.6.1 Preconstruction Survey and Protection of Features

This paragraph supplements the Contract Clause PROTECTION OF EXISTING VEGETATION, STRUCTURES, EQUIPMENT, UTILITIES, AND IMPROVEMENTS. Prior to start of any onsite construction activities, perform a Preconstruction Survey of the project site with the Contracting Officer, and take photographs showing existing environmental conditions in and adjacent to the site. Submit a report for the record. Include in the report a plan describing the features requiring protection under the provisions of the Contract Clauses, which are not specifically identified on the drawings as environmental features requiring protection along with the condition of trees, shrubs and grassed areas immediately adjacent to the site of work

and adjacent to the Contractor's assigned storage area and access route(s), as applicable. The Contractor and the Contracting Officer will sign this survey report upon mutual agreement regarding its accuracy and completeness. Protect those environmental features included in the survey report and any indicated on the drawings, regardless of interference that their preservation may cause to the work under the Contract.

1.6.2 Regulatory Notifications

Provide regulatory notification requirements in accordance with federal, state and local regulations. In cases where the Government will also provide public notification (such as stormwater permitting), coordinate with the Contracting Officer. Submit copies of regulatory notifications to the Contracting Officer at least 15 days prior to commencement of work activities. Typically, regulatory notifications must be provided for the following (this listing is not all-inclusive): demolition, renovation, NPDES defined site work, construction, removal or use of a permitted air emissions source, and remediation of controlled substances (asbestos, hazardous waste, lead paint).

1.6.3 Environmental Brief

Attend an environmental brief to be included in the preconstruction meeting. Provide the following information: types, quantities, and use of hazardous materials that will be brought onto the installation; and types and quantities of wastes/wastewater that may be generated during the Contract. Discuss the results of the Preconstruction Survey at this time.

Prior to initiating any work on site, meet with the Contracting Officer and installation Environmental Office to discuss the proposed Environmental Protection Plan (EPP) or equipment local requirement. Develop a mutual understanding relative to the details of environmental protection, including measures for protecting natural and cultural resources, required reports, required permits, permit requirements (such as mitigation measures), and other measures to be taken.

1.6.4 Environmental Manager

Appoint in writing an Environmental Manager for the project site. The Environmental Manager is directly responsible for coordinating contractor compliance with federal, state, local, and installation requirements. The Environmental Manager must ensure compliance with Hazardous Waste Program requirements (including hazardous waste handling, storage, manifesting, and disposal); implement the EPP; ensure environmental permits are obtained, maintained, and closed out; ensure compliance with Stormwater Program requirements; ensure compliance with Hazardous Materials (storage, handling, and reporting) requirements; and coordinate any remediation of regulated substances (lead, asbestos, PCB transformers). This can be a collateral position; however, the person in this position must be trained to adequately accomplish the following duties: ensure waste segregation and storage compatibility requirements are met; inspect and manage Satellite Accumulation areas; ensure only authorized personnel add wastes to containers; ensure Contractor personnel are trained in 40 CFR requirements in accordance with their position requirements; coordinate removal of waste containers; and maintain the Environmental Records binder and required documentation, including environmental permits compliance and close-out. Submit Environmental Manager Qualifications to the Contracting Officer.

1.6.5 Employee Training Records

Prepare and maintain Employee Training Records throughout the term of the contract meeting applicable 40 CFR requirements. Provide Employee Training Records in the Environmental Records Binder. Ensure every employee completes a program of classroom instruction or on-the-job training that teaches them to perform their duties in a way that ensures compliance with federal, state and local regulatory requirements for RCRA Large Quantity Generator. Provide a Position Description for each employee, by subcontractor, based on the Davis-Bacon Wage Rate designation or other equivalent method, evaluating the employee's association with hazardous and regulated wastes. This Position Description will include training requirements as defined in 40 CFR 265 for a Large Quantity Generator facility. Submit these Assembled Employee Training Records to the Contracting Officer at the conclusion of the project, unless otherwise directed.

Train personnel to meet EPA and state requirements. Conduct environmental protection/pollution control meetings for personnel prior to commencing construction activities. Conduct additional meetings for new personnel and when site conditions change. Include in the training and meeting agenda: methods of detecting and avoiding pollution; familiarization with statutory and contractual pollution standards; installation and care of devices, vegetative covers, and instruments required for monitoring purposes to ensure adequate and continuous environmental protection/pollution control; anticipated hazardous or toxic chemicals or wastes, and other regulated contaminants; recognition and protection of archaeological sites, artifacts, waters of the United States, and endangered species and their habitat that are known to be in the area. Provide copy of the Erosion and Sediment Control Inspector

1.6.6 Non-Compliance Notifications

The Contracting Officer will notify the Contractor in writing of any observed noncompliance with federal, state or local environmental laws or regulations, permits, and other elements of the Contractor's EPP. After receipt of such notice, inform the Contracting Officer of the proposed corrective action and take such action when approved by the Contracting Officer. The Contracting Officer may issue an order stopping all or part of the work until satisfactory corrective action has been taken. FAR 52.242-14 Suspension of Work provides that a suspension, delay, or interruption of work due to the fault or negligence of the Contractor allows for no adjustments to the contract for time extensions or equitable adjustments. In addition to a suspension of work, the Contracting Officer may use additional authorities under the contract or law.

1.7 ENVIRONMENTAL PROTECTION PLAN

The purpose of the EPP is to present an overview of known or potential environmental issues that must be considered and addressed during construction. Incorporate construction related objectives and targets from the installation's EMS into the EPP. Include in the EPP measures for protecting natural and cultural resources, required reports, and other measures to be taken. Meet with the Contracting Officer or Contracting Officer Representative to discuss the EPP and develop a mutual understanding relative to the details for environmental protection including measures for protecting natural resources, required reports, and other measures to be taken. Submit the EPP within 15 days after Contractor award and not less than 10 days before the preconstruction

meeting. Revise the EPP throughout the project to include any reporting requirements, changes in site conditions, or contract modifications that change the project scope of work in a way that could have an environmental impact. No requirement in this section will relieve the Contractor of any applicable federal, state, and local environmental protection laws and regulations. During Construction, identify, implement, and submit for approval any additional requirements to be included in the EPP. Maintain the current version onsite.

The EPP includes, but is not limited to, the following elements:

1.7.1 General Overview and Purpose

1.7.1.1 Descriptions

A brief description of each specific plan required by environmental permit or elsewhere in this Contract such as spill control plan, solid waste management plan, contaminant prevention plan, traffic control plan Non-Hazardous Solid Waste Disposal Plan.

1.7.1.2 Duties

The duties and level of authority assigned to the person(s) on the job site who oversee environmental compliance, such as who is responsible for adherence to the EPP, who is responsible for spill cleanup and training personnel on spill response procedures, who is responsible for manifesting hazardous waste to be removed from the site (if applicable), and who is responsible for training the Contractor's environmental protection personnel.

1.7.1.3 Procedures

A copy of any standard or project-specific operating procedures that will be used to effectively manage and protect the environment on the project site.

1.7.1.4 Communications

Communication and training procedures that will be used to convey environmental management requirements to Contractor employees and subcontractors.

1.7.1.5 Contact Information

Emergency contact information contact information (office phone number, cell phone number, and e-mail address).

1.7.2 General Site Information

1.7.2.1 Drawings

Drawings showing locations of proposed temporary excavations or embankments for haul roads, stream crossings, jurisdictional wetlands, material storage areas, structures, sanitary facilities, storm drains and conveyances, and stockpiles of excess soil.

1.7.2.2 Work Area

Work area plan showing the proposed activity in each portion of the area

and identify the areas of limited use or nonuse. Include measures for marking the limits of use areas, including methods for protection of features to be preserved within authorized work areas and methods to control runoff and to contain materials on site, and a traffic control plan.

Show where any fuels, hazardous substances, solvents, or lubricants will be stored. Provide a spill plan to address any releases of those materials.

1.7.2.3 Documentation

A letter signed by an officer of the firm appointing the Environmental Manager and stating that person is responsible for managing and implementing the Environmental Program as described in this contract. Include in this letter the Environmental Manager's authority to direct the removal and replacement of non-conforming work.

1.7.3 Management of Natural Resources

a. Land resources

b. Tree protection

c. Replacement of damaged landscape features

d. Temporary construction

e. Stream crossings

f. Fish and wildlife resources

g. Wetland areas

1.7.4 Protection of Historical and Archaeological Resources

a. Objectives

b. Methods

1.7.5 Stormwater Management and Control

a. Ground cover

b. Erodible soils

c. Temporary measures

(1) Structural Practices

(2) Temporary and permanent stabilization

d. Effective selection, implementation and maintenance of Best Management Practices (BMPs).

e. Stormwater Pollution Prevention Plan (SWPPP).

1.7.6 Protection of the Environment from Waste Derived from Contractor Operations

This item consists of the management procedures for hazardous waste to be generated. The elements of those procedures will coincide with the Installation Hazardous Waste Management Plan when within an installation. The Contracting Officer will provide a copy of the Installation Hazardous Waste Management Plan as applicable.

As a minimum, include the following:

a. List of the types of hazardous wastes expected to be generated

b. Procedures to ensure a written waste determination is made for appropriate wastes that are to be generated

c. Sampling/analysis plan, including laboratory method(s) that will be used for waste determinations and copies of relevant laboratory certifications

d. Methods and proposed locations for hazardous waste accumulation/storage (that is, in tanks or containers)

e. Management procedures for storage, labeling, transportation, and disposal of waste (treatment of waste is not allowed unless specifically noted)

f. Management procedures and regulatory documentation ensuring disposal of hazardous waste complies with Land Disposal Restrictions (40 CFR 268)

g. Management procedures for recyclable hazardous materials such as lead-acid batteries, used oil, and similar

h. Used oil management procedures in accordance with 40 CFR 279; Hazardous waste minimization procedures

i. Plans for the disposal of hazardous waste by permitted facilities; and Procedures to be employed to ensure required employee training records are maintained.

1.7.7 Prevention of Releases to the Environment

Procedures to prevent releases to the environment

Notifications in the event of a release to the environment

1.7.8 Regulatory Notification and Permits

List what notifications and permit applications must be made. Some permits require up to 180 days to obtain. Demonstrate that those permits have been obtained or applied for by including copies of applicable environmental permits. The EPP will not be approved until the permits have been obtained.

1.7.9 Clean Air Act Compliance

1.7.9.1 Haul Route

Submit truck and material haul routes along with a Dirt and Dust Control Plan for controlling dirt, debris, and dust on Installation roadways. As a minimum, identify in the plan the subcontractor and equipment for cleaning along the haul route and measures to reduce dirt, dust, and debris from roadways.

1.7.9.2 Pollution Generating Equipment

Identify air pollution generating equipment or processes that may require federal, state, or local permits under the Clean Air Act. Determine requirements based on any current installation permits and the impacts of the project. Provide a list of all fixed or mobile equipment, machinery or operations that could generate air emissions during the project to the Installation Environmental Office (Air Program Manager). Ensure required permits are obtained prior to installing and operating applicable equipment/processes.

1.7.9.3 Stationary Internal Combustion Engines

Identify portable and stationary internal combustion engines that will be supplied, used or serviced. Comply with 40 CFR 60 Subpart IIII, 40 CFR 60 Subpart JJJJ, 40 CFR 63 Subpart ZZZZ, and local regulations as applicable. At minimum, include the make, model, serial number, manufacture date, size (engine brake horsepower), and EPA emission certification status of each engine. Maintain applicable records and log hours of operation and fuel use. Logs must include reasons for operation and delineate between maintenance/testing, emergency, and non-emergency operation.

1.7.9.4 Air Pollution-engineering Processes

Identify planned air pollution-generating processes and management control measures (including, but not limited to, spray painting, abrasive blasting, demolition, material handling, fugitive dust, and fugitive emissions). Log hours of operations and track quantities of materials used.

1.7.9.5 Compliant Materials

Provide the Government a list of SDSs for all hazardous materials proposed for use on site. Materials must be compliant with all Clean Air Act regulations for emissions including solvent and volatile organic compound contents, and applicable National Emission Standards for Hazardous Air Pollutants requirements. The Government may alter or limit use of specific materials as needed to meet installation permit requirements for emissions.

1.8 LICENSES AND PERMITS

Obtain licenses and permits required for the construction of the project and in accordance with FAR 52.236-7 Permits and Responsibilities. Notify the Government of all equipment that may require permits or special approvals that the Contractor plans to use on site. This paragraph supplements the Contractor's responsibility under FAR 52.236-7 Permits and Responsibilities.

1.9 ENVIRONMENTAL RECORDS BINDER

Maintain on-site a separate three-ring Environmental Records Binder and submit at the completion of the project. Make separate parts within the binder that correspond to each submittal listed under paragraph CLOSEOUT SUBMITTALS in this section.

1.10 SOLID WASTE MANAGEMENT PERMIT

Provide the Contracting Officer with written notification of the quantity of anticipated solid waste or debris that is anticipated or estimated to be generated by construction. Include in the report the locations where various types of waste will be disposed or recycled. Include letters of acceptance from the receiving location or as applicable; submit one copy of the receiving location state and local Solid Waste Management Permit or license showing such agency's approval of the disposal plan before transporting wastes off Government property.

1.10.1 Monthly Solid Waste Disposal Report

Monthly, submit a solid waste disposal report to the Contracting Officer. For each waste, the report will state the classification (using the definitions provided in this section), amount, location, and name of the business receiving the solid waste.

PART 2 PRODUCTS

Not Used

PART 3 EXECUTION

3.1 PROTECTION OF NATURAL RESOURCES

Minimize interference with, disturbance to, and damage to fish, wildlife, and plants, including their habitats. Prior to the commencement of activities, consult with the Installation Environmental Office as applicable, regarding rare species or sensitive habitats that need to be protected. The protection of rare, threatened, and endangered animal and plant species identified, including their habitats, is the Contractor's responsibility.

Preserve the natural resources within the project boundaries and outside the limits of permanent work. Restore to an equivalent or improved condition upon completion of work that is consistent with the requirements of the Installation Environmental Office or as otherwise specified. Confine construction activities to within the limits of the work indicated or specified.

3.1.1 Flow Ways

Do not alter water flows or otherwise significantly disturb the native habitat adjacent to the project and critical to the survival of fish and wildlife, except as specified and permitted.

3.1.2 Vegetation

Except in areas to be cleared, do not remove, cut, deface, injure, or destroy trees or shrubs without the Contracting Officer's permission. Do

not fasten or attach ropes, cables, or guys to existing nearby trees for anchorages unless authorized by the Contracting Officer. Where such use of attached ropes, cables, or guys is authorized, the Contractor is responsible for any resultant damage.

Protect existing trees and critical root zones (CRZ) that are to remain to ensure they are not injured, bruised, defaced, or otherwise damaged by construction operations. Remove displaced rocks from uncleared areas. Coordinate with the Contracting Officer and Installation Environmental Office to determine appropriate action for trees and other landscape features scarred or damaged by equipment operations.

3.2 STORMWATER

Do not discharge stormwater from construction sites to the sanitary sewer. If the water is noted or suspected of being contaminated, it may only be released to the storm drain system if the discharge is specifically permitted. Obtain authorization in advance from the Installation Environmental Office for any release of contaminated water.

3.2.1 Erosion and Sediment Control Measures

Provide erosion and sediment control measures in accordance with state and local laws and regulations. Preserve vegetation to the maximum extent practicable.

Erosion control inspection reports may be compiled as part of a stormwater pollution prevention plan inspection reports.

3.2.1.1 Sediment Control Practices

Implement sediment control practices to divert flows from exposed soils, temporarily store flows, or otherwise limit runoff and the discharge of pollutants from exposed areas of the site. Implement sediment control practices prior to soil disturbance and prior to creating areas with concentrated flow, during the construction process to minimize erosion and sediment laden runoff. Include the following devices: silt fence.

3.2.2 Work Area Limits

Mark the areas that need not be disturbed under this Contract prior to commencing construction activities. Mark or fence isolated areas within the general work area that are not to be disturbed. Protect monuments and markers before construction operations commence. Where construction operations are to be conducted during darkness, all markers must be visible in the dark. Personnel must be knowledgeable of the purpose for marking and protecting particular objects.

3.2.3 Contractor Facilities and Work Areas

Place field offices, staging areas, stockpile storage, and temporary buildings in areas designated on the drawings or as directed by the Contracting Officer. Move or relocate the Contractor facilities only when approved by the Government. Provide erosion and sediment controls for onsite borrow and spoil areas to prevent sediment from entering nearby waters. Control temporary excavation and embankments for plant or work areas to protect adjacent areas.

3.3 SURFACE AND GROUNDWATER

3.3.1 Cofferdams, Diversions, and Dewatering

Construction operations for dewatering, removal of cofferdams, tailrace excavation, and tunnel closure must be constantly controlled to maintain compliance with existing state water quality standards and designated uses of the surface water body. Comply with the State of Virginia water quality standards and anti-degradation provisions. Do not discharge excavation ground water to the sanitary sewer, storm drains, or to surface waters without prior specific authorization in writing from the Installation Environmental Office or Contracting Officer. Discharge of hazardous substances will not be permitted under any circumstances. Use sediment control BMPs to prevent construction site runoff from directly entering any storm drain or surface waters.

If the construction dewatering is noted or suspected of being contaminated, it may only be released to the storm drain system if the discharge is specifically permitted. Obtain authorization for any contaminated groundwater release in advance from the Installation Environmental Officer and the federal or state authority, as applicable. Discharge of hazardous substances will not be permitted under any circumstances.

3.3.2 Waters of the United States

Do not enter, disturb, destroy, or allow discharge of contaminants into waters of the United States.

3.4 AIR RESOURCES

Equipment operation, activities, or processes will be in accordance with 40 CFR 64 and state air emission and performance laws and standards.

3.4.1 Preconstruction Air Permits

Notify the Air Program Manager, through the Contracting Officer, at least 6 months prior to bringing equipment, assembled or unassembled, onto the Installation, so that air permits can be secured. Necessary permitting time must be considered in regard to construction activities. Clean Air Act (CAA) permits must be obtained prior to bringing equipment, assembled or unassembled, onto the Installation.

3.5 WASTE MINIMIZATION

Minimize the use of hazardous materials and the generation of waste. Include procedures for pollution prevention/ hazardous waste minimization in the Hazardous Waste Management Section of the EPP. Obtain a copy of the installation's Pollution Prevention/Hazardous Waste Minimization Plan for reference material when preparing this part of the EPP. If no written plan exists, obtain information by contacting the Contracting Officer. Describe the anticipated types of the hazardous materials to be used in the construction when requesting information.

3.5.1 Salvage, Reuse and Recycle

Identify anticipated materials and waste for salvage, reuse, and recycling. Describe actions to promote material reuse, resale or recycling. To the extent practicable, all scrap metal must be sent for

reuse or recycling and will not be disposed of in a landfill.

Include the name, physical address, and telephone number of the hauler, if transported by a franchised solid waste hauler. Include the destination and, unless exempted, provide a copy of the state or local permit (cover) or license for recycling.

3.5.2 Nonhazardous Solid Waste Diversion Report

Maintain an inventory of nonhazardous solid waste diversion and disposal of construction and demolition debris. Submit a report to the Contracting Officer on the first working day after each fiscal year quarter, starting the first quarter that nonhazardous solid waste has been generated. Include the following in the report:

Construction and Demolition (C&D) Debris Disposed	cubic yards as appropriate
C&D Debris Recycled	cubic yards as appropriate
C&D Debris Composted	cubic yards as appropriate
Total C&D Debris Generated	cubic yards as appropriate
Waste Sent to Waste-To-Energy Incineration Plant (This amount should not be included in the recycled amount)	cubic yards as appropriate

3.6 WASTE MANAGEMENT AND DISPOSAL

3.6.1 Waste Determination Documentation

Complete a Waste Determination form (provided at the pre-construction conference) for Contractor-derived wastes to be generated. All potentially hazardous solid waste streams that are not subject to a specific exclusion or exemption from the hazardous waste regulations (e.g., scrap metal, domestic sewage) or subject to special rules, (lead-acid batteries and precious metals) must be characterized in accordance with the requirements of 40 CFR 262.11 or corresponding applicable state or local regulations. Base waste determination on user knowledge of the processes and materials used, and analytical data when necessary. Consult with the Installation environmental staff for guidance on specific requirements. Attach support documentation to the Waste Determination form. As a minimum, provide a Waste Determination form for the following waste (this listing is not exhaustive): oil- and latex -based painting and caulking products, solvents, adhesives, aerosols, petroleum products, and containers of the original materials.

3.6.1.1 Sampling and Analysis of Waste

3.6.1.1.1 Waste Sampling

Sample waste in accordance with EPA SW-846. Clearly mark each sampled drum or container with the Contractor's identification number, and cross reference to the chemical analysis performed.

3.6.1.1.2 Laboratory Analysis

Follow the analytical procedure and methods in accordance with the 40 CFR 261. Provide analytical results and reports performed to the Contracting Officer. Coordinate all activities with Installation Hazardous Waste Manager.

3.6.1.1.3 Analysis Type

Identify hazardous waste by analyzing for the following characteristics: toxicity based on TCLP results.

3.6.2 Solid Waste Management

3.6.2.1 Project Solid Waste Disposal Documentation Report

Provide copies of the waste handling facilities' weight tickets, receipts, bills of sale, and other sales documentation. In lieu of sales documentation, a statement indicating the disposal location for the solid waste that is signed by an employee authorized to legally obligate or bind the firm may be submitted. The sales documentation Contractor certification must include the receiver's tax identification number and business, EPA or state registration number, along with the receiver's delivery and business addresses and telephone numbers. For each solid waste retained for the Contractor's own use, submit the information previously described in this paragraph on the solid waste disposal report. Prices paid or received do not have to be reported to the Contracting Officer unless required by other provisions or specifications of this Contract or public law.

3.6.2.2 Control and Management of Solid Wastes

Pick up solid wastes, and place in covered containers that are regularly emptied. Do not prepare or cook food on the project site. Prevent contamination of the site or other areas when handling and disposing of wastes. At project completion, leave the areas clean. Employ segregation measures so that no hazardous or toxic waste will become co-mingled with non-hazardous solid waste. Transport solid waste off Government property and dispose of it in compliance with 40 CFR 260, state, and local requirements for solid waste disposal. A Subtitle D RCRA permitted landfill is the minimum acceptable offsite solid waste disposal option. Verify that the selected transporters and disposal facilities have the necessary permits and licenses to operate. Solid waste disposal offsite must comply with most stringent local, state, and federal requirements, including 40 CFR 241, 40 CFR 243, and 40 CFR 258.

Manage hazardous material used in construction, including but not limited to, aerosol cans, waste paint, cleaning solvents, contaminated brushes, and used rags, in accordance with 49 CFR 173.

3.6.3 Control and Management of Hazardous Waste

Do not dispose of hazardous waste on Government property. Do not discharge any waste to a sanitary sewer, storm drain, or to surface waters or conduct waste treatment or disposal on Government property without written approval of the Contracting Officer and Installation Hazardous Waste Manager.

3.6.3.1 Hazardous Waste/Debris Management

Identify construction activities that will generate hazardous waste or debris. Provide a documented waste determination for resultant waste streams. Identify, label, handle, store, and dispose of hazardous waste or debris in accordance with federal, state, and local regulations, including 40 CFR 261, 40 CFR 262, 40 CFR 263, 40 CFR 264, 40 CFR 265, 40 CFR 266, and 40 CFR 268.

Manage hazardous waste in accordance with the approved Hazardous Waste Management Section of the EPP. Store hazardous wastes in approved containers in accordance with 49 CFR 173 and 49 CFR 178. Hazardous waste generated within the confines of Government facilities is identified as being generated by the Government. Prior to removal of any hazardous waste from Government property, hazardous waste manifests must be signed by personnel from the Installation Environmental Office. Do not bring hazardous waste onto Government property. Provide the Contracting Officer with a copy of waste determination documentation for any solid waste streams that have any potential to be hazardous waste or contain any chemical constituents listed in 40 CFR 372-SUBPART D.

3.6.3.2 Hazardous Waste Disposal

3.6.3.2.1 Responsibilities for Contractor's Disposal

Provide hazardous waste manifest to the Installations Environmental Office for review, approval, and signature prior to shipping waste off Government property.

3.6.3.2.1.1 Services

Provide service necessary for the final treatment or disposal of the hazardous material or waste in accordance with 40 CFR 260 - 40 CFR 279, local, and state, laws and regulations, and the terms and conditions of the Contract within 60 days after the materials have been generated. These services include necessary personnel, labor, transportation, packaging, detailed analysis (if required for disposal or transportation, include manifesting or complete waste profile sheets, equipment, and compile documentation).

3.6.3.2.1.2 Samples

Obtain a representative sample of the material generated for each job done to provide waste stream determination.

3.6.3.2.1.3 Analysis

Analyze each sample taken and provide analytical results to the Contracting Officer. See paragraph WASTE DETERMINATION DOCUMENTATION.

3.6.3.2.1.4 Labeling

During waste accumulation label all containers in accordance with 40 CFR 262. Prior to offering a waste for off-site transport, determine the Department of Transportation's (DOT's) proper shipping names for waste in accordance with 49 CFR 172 (each container requiring disposal) and demonstrate to the Contracting Officer how this determination is developed and supported by the sampling and analysis requirements contained herein. Label all containers of hazardous waste with the words "Hazardous Waste"

or other words to describe the contents of the container in accordance with 40 CFR 262 and applicable state or local regulations.

3.6.3.3 Universal Waste Management

Manage the following categories of universal waste in accordance with federal, state, and local requirements and installation instructions:

a. Batteries as described in 40 CFR 273.2

b. Lamps as described in 40 CFR 273.5

c. Mercury-containing equipment as described in 40 CFR 273.4

d. Aerosol cans as described in 40 CFR 273.6

e. Installation specific

Mercury is prohibited in the construction of this facility, unless specified otherwise, and with the exception of mercury vapor lamps and fluorescent lamps. Dumping of mercury-containing materials and devices such as mercury vapor lamps, fluorescent lamps, and mercury switches, in rubbish containers is prohibited. Remove without breaking, pack to prevent breakage, and transport out of the activity in an unbroken condition for disposal as directed.

3.6.3.4 Electronics End-of-Life Management

Recycle or dispose of electronics waste, including, but not limited to, used electronic devices such computers, monitors, hard-copy devices, televisions, mobile devices, in accordance with 40 CFR 260-262, state, and local requirements, and installation instructions.

3.6.3.5 Disposal Documentation for Hazardous and Regulated Waste

Contact the Contracting Officer for the facility RCRA identification number that is to be used on each manifest.

Submit a copy of the applicable EPA and or state permit(s), manifest(s), or license(s) for transportation, treatment, storage, and disposal of hazardous and regulated waste by permitted facilities. Hazardous or toxic waste manifests must be reviewed, signed, and approved by the Contracting Officer before the Contractor may ship waste. To obtain specific disposal instructions, coordinate with the Installation Environmental Office. Refer to location special requirements for the Installation Point of Contact information.

3.6.4 Releases/Spills of Oil and Hazardous Substances

3.6.4.1 Response and Notifications

Exercise due diligence to prevent, contain, and respond to spills of hazardous material, hazardous substances, hazardous waste, sewage, regulated gas, petroleum, lubrication oil, and other substances regulated in accordance with 40 CFR 300. Maintain spill cleanup equipment and materials at the work site. In the event of a spill, take prompt, effective action to stop, contain, curtail, or otherwise limit the amount, duration, and severity of the spill/release. In the event of any releases of oil and hazardous substances, chemicals, or gases; immediately (within

15 minutes) notify the Regional Dispatch Center (RDC) at 757-444-3333. The RDC will collect information about the spill and make the appropriate notifications to the Fire Department/Police Dept., Command Duty Officer (CDO), Installation Environmental (EV) Staff and notify the National Response Center (NRC) and Navy On-Scene Coordinator (NOSC), if required. A spill report containing all details of the spill will need to be provided to the appropriate EV staff.

Spill response must be in accordance with 40 CFR 300 and applicable state and local regulations. Contain and clean up these spills without cost to the Government.

3.6.4.2 Clean Up

Clean up hazardous and non-hazardous waste spills. Reimburse the Government for costs incurred including sample analysis materials, clothing, equipment, and labor if the Government will initiate its own spill cleanup procedures, for Contractor- responsible spills, when: Spill cleanup procedures have not begun within one hour of spill discovery/occurrence; or, in the Government's judgment, spill cleanup is inadequate and the spill remains a threat to human health or the environment.

3.6.5 Wastewater

3.7 HAZARDOUS MATERIAL MANAGEMENT

Include hazardous material control procedures in the Accident Prevention Plan (APP), in accordance with Section 01 35 26 GOVERNMENTAL SAFETY REQUIREMENTS. Address procedures and proper handling of hazardous materials, including the appropriate transportation requirements. Do not bring hazardous material onto Government property that does not directly relate to requirements for the performance of this contract. Submit an SDS and estimated quantities to be used for each hazardous material to the Contracting Officer prior to bringing the material on the installation. Typical materials requiring SDS and quantity reporting include, but are not limited to, oil and latex based painting and caulking products, solvents, adhesives, aerosol, and petroleum products. Use hazardous materials in a manner that minimizes the amount of hazardous waste generated. Containers of hazardous materials must have National Fire Protection Association labels or their equivalent. Certify that hazardous materials removed from the site are hazardous materials and do not meet the definition of hazardous waste, in accordance with 40 CFR 261 and state and installation requirements.

3.7.1 Contractor Hazardous Material Inventory Log

Submit the "Contractor Hazardous Material Inventory Log"(found at: https://www.wbdg.org/dod/ufgs/forms-graphics-tables), which provides information required by (EPCRA Sections 312 and 313) along with corresponding SDS, to the Contracting Officer at the start and at the end of construction (30 days from final acceptance), and update no later than January 31 of each calendar year during the life of the contract. Keep copies of the SDSs for hazardous materials onsite. At the end of the project, provide the Contracting Officer with copies of the SDSs, and the maximum quantity of each material that was present at the site at any one time, the dates the material was present, the amount of each material that was used during the project, and how the material was used.

The Contracting Officer may request documentation for any spills or releases, environmental reports, or off-site transfers.

3.8 PREVIOUSLY USED EQUIPMENT

Clean previously used construction equipment prior to bringing it onto the project site. Equipment must be free from soil residuals, egg deposits from plant pests, noxious weeds, and plant seeds. Consult with the U.S. Department of Agriculture jurisdictional office for additional cleaning requirements.

3.9 INADVERTENT DISCOVERY OF PETROLEUM-CONTAMINATED SOIL OR HAZARDOUS WASTES

If petroleum-contaminated soil, or suspected hazardous waste is found during construction that was not identified in the Contract documents, immediately notify the Contracting Officer. Do not disturb this material until authorized by the Contracting Officer.

3.10 CHLORDANE

Evaluate excess soils and concrete foundation debris generated during the demolition of housing units or other wooden structures for the presence of chlordane or other pesticides prior to reuse or final disposal.

3.11 POST CONSTRUCTION CLEANUP

Clean up areas used for construction in accordance with Contract Clause: "Cleaning Up". Unless otherwise instructed in writing by the Contracting Officer, remove traces of temporary construction facilities such as haul roads, work area, structures, foundations of temporary structures, stockpiles of excess or waste materials, and other vestiges of construction prior to final acceptance of the work. Grade parking area and similar temporarily used areas to conform with surrounding contours.

-- End of Section --

THIS PAGE INTENTIONALLY LEFT BLANK

SECTION 01 58 00

PROJECT IDENTIFICATION
08/19, CHG 5: 08/22

PART 1 GENERAL

1.1 REFERENCES

The publications listed below form a part of this specification to the extent referenced. The publications are referred to within the text by the basic designation only.

AMERICAN WOOD PROTECTION ASSOCIATION (AWPA)

AWPA U1	(2025) Use Category System: User Specification for Treated Wood

1.2 QUALITY CONTROL

1.3 PROJECT IDENTIFICATION SIGN

Prior to initiating any work on site, provide one project identification sign at the location designated. Construct the sign in accordance with project sign detail, which can be downloaded at: https://www.wbdg.org/dod/ufgs/ufgs-forms-graphics-tables. Maintain sign throughout the life of the project. Upon completion of the project, remove the sign from the site.

1.3.1 Project Identification Signboard

Provide a project identification signboard in accordance with attached Plates 1, 3, and 4. Erect a signboard at a conspicuous location on the job site where directed by the Contracting Officer.

a. The field of the sign consists of a 4 by 8 foot sheet of grade B-B medium density overlaid exterior plywood.

b. Lumber is B or better Southern pine, pressure-preservative treated in accordance with AWPA U1. Nails are aluminum or galvanized steel.

c. Give one coat of exterior alkyd primer and two coats of exterior alkyd enamel paint to the entire signboard and supports. Perform the lettering and sign work by a skilled sign painter using paint known in the trade as bulletin colors. The colors, lettering sizes, and lettering styles are as indicated. Where preservative-treated lumber is required, utilize only cured pressure-treated wood which has had the chemicals leached from the surface of the wood prior to painting.

d. Use spray applied automotive quality high gloss acrylic white enamel paint as background for the NAVFAC logo. NAVFAC logo is an applied 2 mil film sticker/decal with either transparent or white background or paint the logo by stencil onto the sign. The weather resistant sticker/decal film is rated for a minimum of 2-year exterior vertical exposure. Mount the self-adhering sticker to the sign with pressure sensitive, permanent acrylic adhesive. Shop cut sticker/decal to rectangular shape and provide pull-off backing sheet on adhesive side of design sticker for shipping.

e. Sign paint colors (manufacturer's numbers/types listed below for color identification only)

(1) Blue = To match dark blue color in the NAVFAC logo.

(2) White = To match Brilliant White color in the NAVFAC logo.

f. NAVFAC logo must retain proportions and design integrity. NAVFAC logos in electronic format may be obtained from the WBDG at the following link: https://www.wbdg.org/dod/ufgs/ufgs-forms-graphics-tables. Use the following to choose color values for the paint to be used:

(1) Dark Blue = equivalent to CMYK values 100, 72, 0, 8.

(2) Light Blue = equivalent to CMYK values 69, 34, 0, 0.

(3) Cyan = equivalent to CMYK values 100, 9, 0, 6.

(4) Yellow = equivalent to CMYK values 0.9,94, 0.

PART 2 PRODUCTS

Not used.

PART 3 EXECUTION

Not used.

-- End of Section --

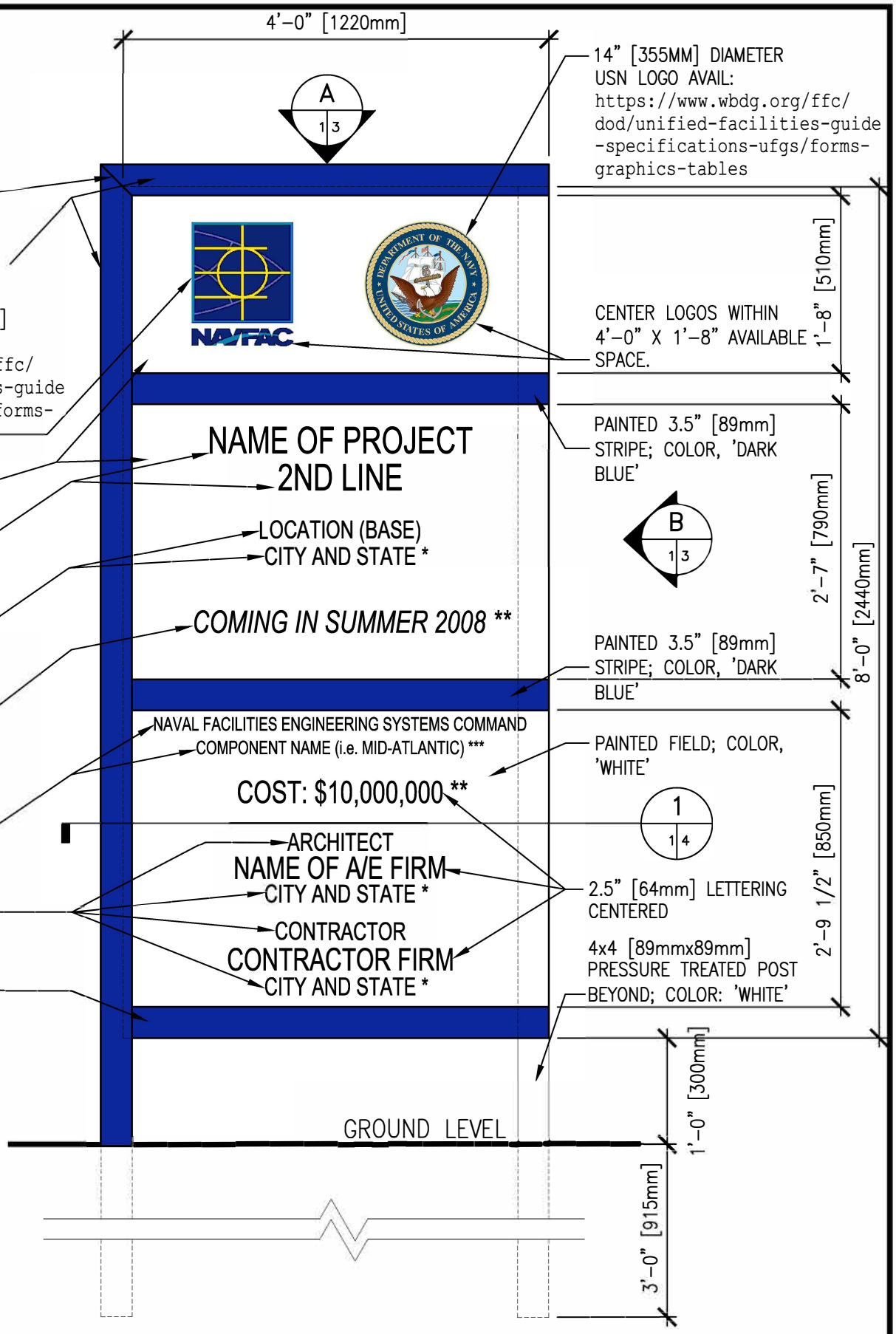

NOTES:
1. PAINT ALL OTHER WOOD SURFACES WITH ONE COAT EXT. PRIMER AND TWO COATS GLOSS WHITE ENAMEL.
2. ALL LETTERING SHALL BE EVENLY SPACED.
3. LETTER STYLE, 'ARIAL', COLOR 'DARK BLUE'. TYPICAL FOR ALL LETTERING.

*–ABBREVIATE STATE
**–CONFIRM USE WITH CONTRACTING OFFICER
***–VERIFY NAME WITH CONTRACTING OFFICER.

NAVAL FACILITIES ENGINEERING SYSTEMS COMMAND PROJECT IDENTIFICATION SIGNBOARD

SCALE: 3/4" = 1'-0"

PLATE 1USN

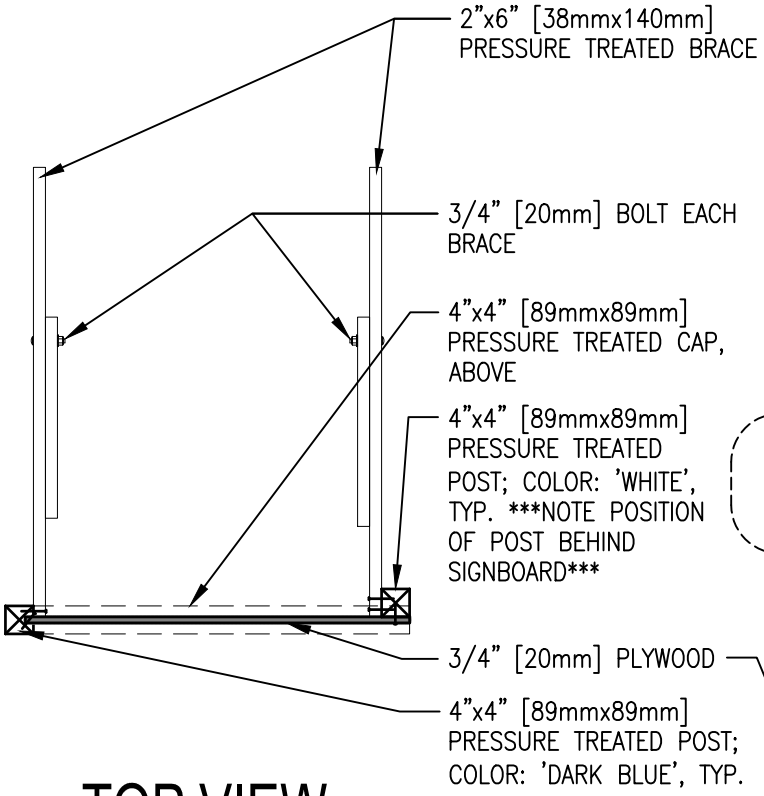

A
1,2 3

TOP VIEW

SCALE: 1/2" = 1'-0"

NOTES:
1. POSTS AND BRACES SHALL BE PRESSURE TREATED.
2. ALL FASTENERS SHALL BE ZINC COATED.
3. BRACING IS REQUIRED IN ALL SOIL CONDITIONS AND HIGH WIND ENVIRONMENTS.

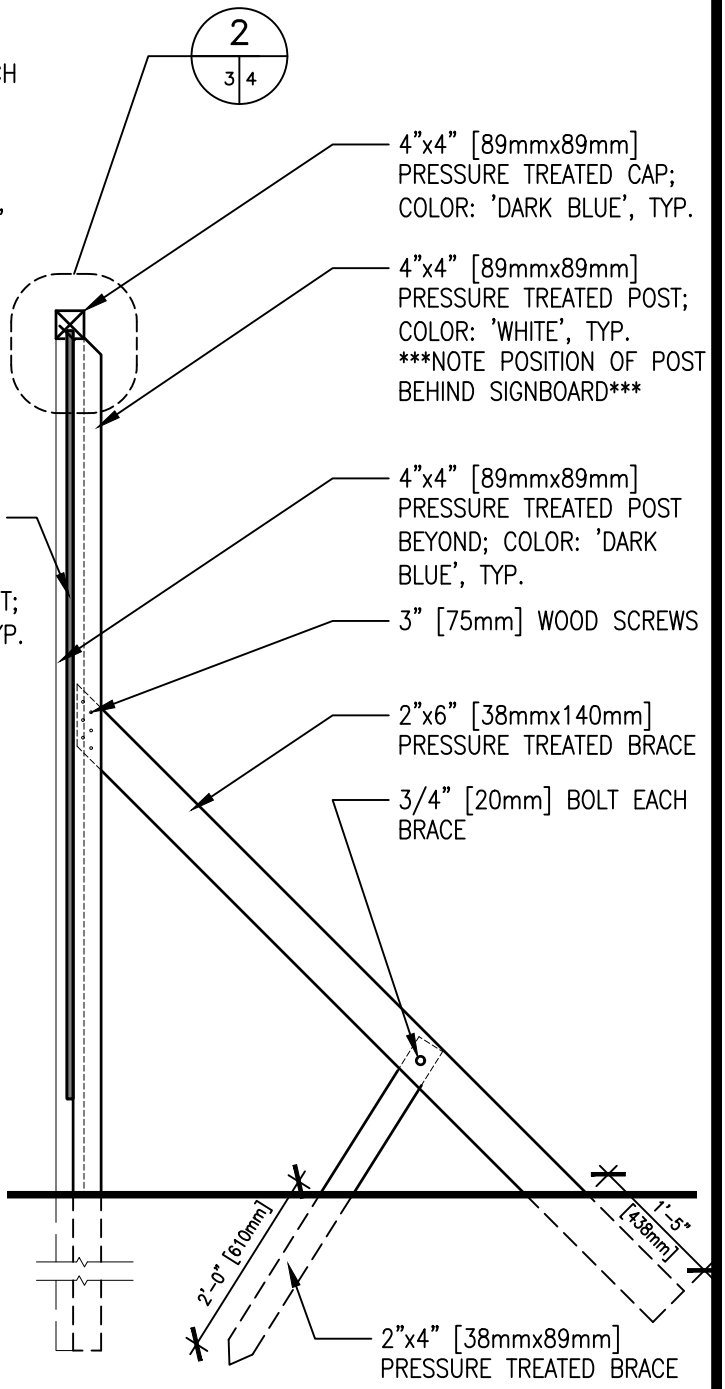

B
1,2 3

SIDE VIEW

SCALE: 1/2" = 1'-0"

NAVAL FACILITIES ENGINEERING SYSTEMS COMMAND
PROJECT IDENTIFICATION SIGNBOARD
SUPPORT DETAILS

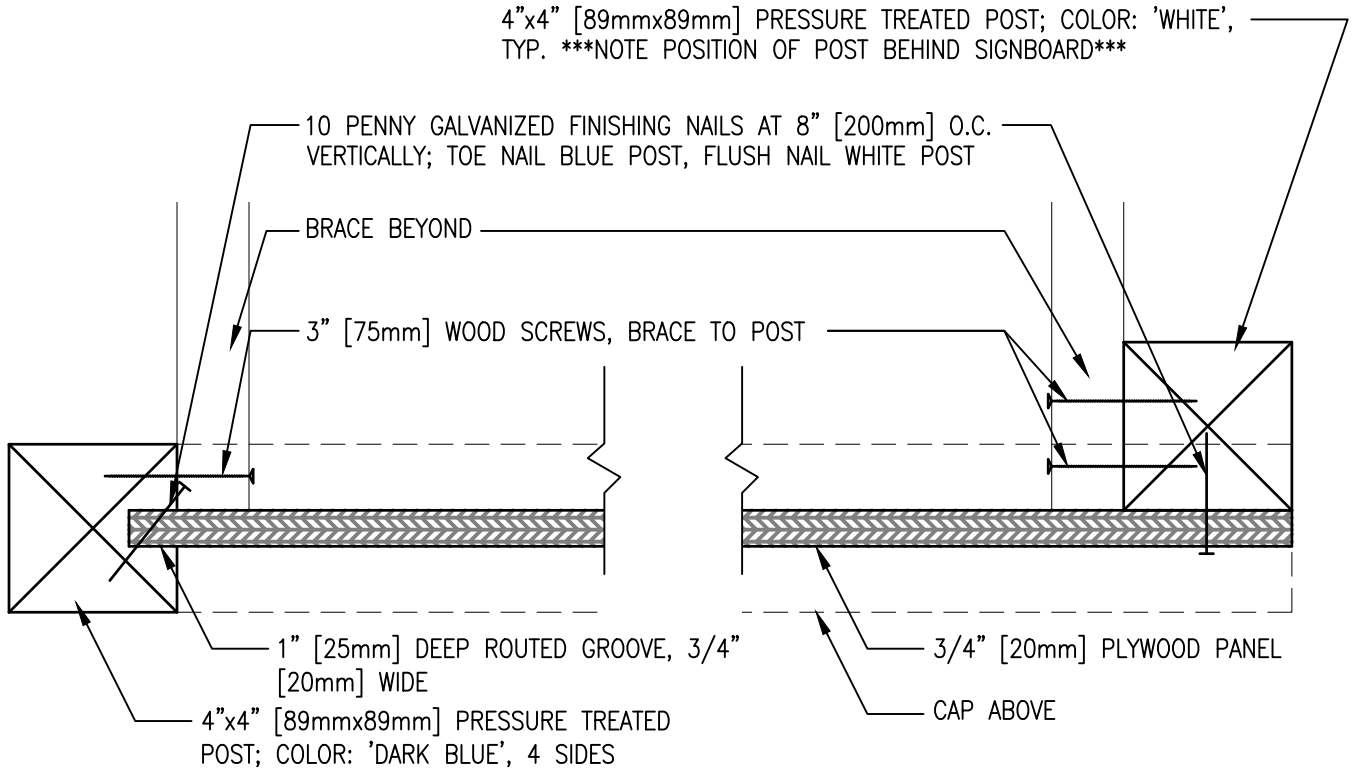

1 PLAN SECTION

1,2 | 4

SCALE: 3" = 1'-0"

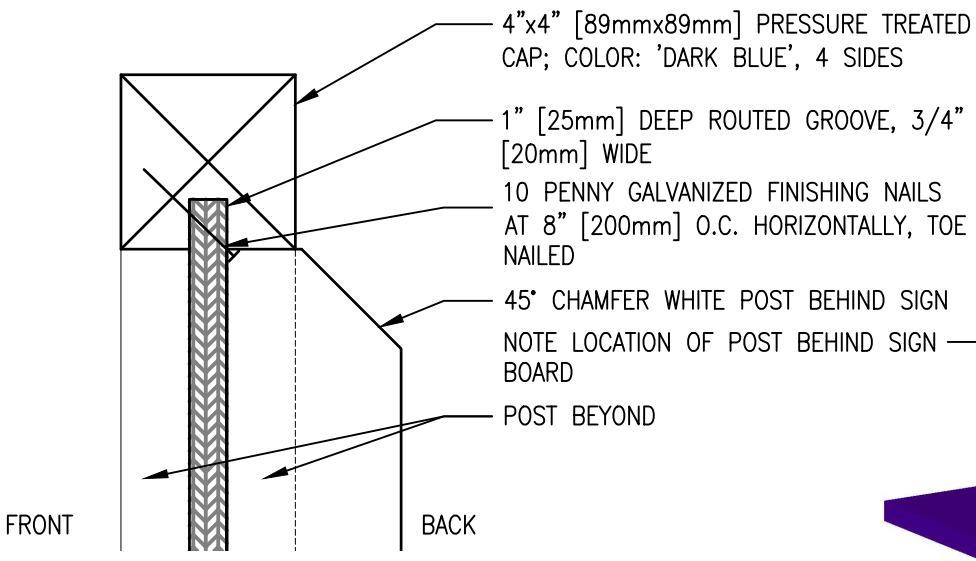

2 SECTION AT TOP

1,2 | 4

SCALE: 3" = 1'-0"

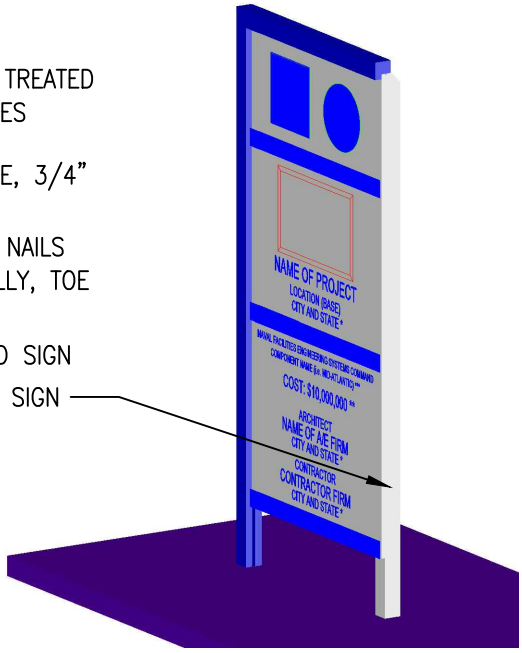

3 ISO VIEW

2 | 4

SCALE: NONE

NAVAL FACILITIES ENGINEERING SYSTEMS COMMAND
PROJECT IDENTIFICATION SIGNBOARD SECTIONS

THIS PAGE INTENTIONALLY LEFT BLANK

SECTION 01 74 19

CONSTRUCTION WASTE MANAGEMENT AND DISPOSAL
02/19, CHG 3: 11/21

PART 1 GENERAL

1.1 REFERENCES

The publications listed below form a part of this specification to the extent referenced. The publications are referred to within the text by the basic designation only.

U.S. NATIONAL ARCHIVES AND RECORDS ADMINISTRATION (NARA)

40 CFR 273	Standards for Universal Waste Management
49 CFR 173	Shippers - General Requirements for Shipments and Packagings
49 CFR 178	Specifications for Packagings

1.2 DEFINITIONS

1.2.1 Co-mingle

The practice of placing unrelated materials together in a single container, usually for benefits of convenience and speed.

1.2.2 Construction Waste

Waste generated by construction activities, such as scrap materials, damaged or spoiled materials, temporary and expendable construction materials, and other waste generated by the workforce during construction activities.

1.2.3 Demolition Debris/Waste

Waste generated from demolition activities, including minor incidental demolition waste materials generated as a result of Intentional dismantling of all or portions of a building, to include clearing of building contents that have been destroyed or damaged.

1.2.4 Disposal

Depositing waste in a solid waste disposal facility, usually a managed landfill or incinerator, regulated in the US under the Resource Conservation and Recovery Act (RCRA).

1.2.5 Diversion

The practice of diverting waste from disposal in a landfill or incinerator, by means of eliminating or minimizing waste, or reuse of materials.

1.2.6 Final Construction Waste Diversion Report

A written assertion by a material recovery facility operator identifying

constituent materials diverted from disposal, usually including summary tabulations of materials, weight in short-ton.

1.2.7 Recycling

The series of activities, including collection, separation, and processing, by which products or other materials are diverted from the solid waste stream for use in the form of raw materials in the manufacture of new products sold or distributed in commerce, or the reuse of such materials as substitutes for goods made of virgin materials, other than fuel.

1.2.8 Reuse

The use of a product or materials again for the same purpose, in its original form or with little enhancement or change.

1.2.9 Salvage

Usable, salable items derived from buildings undergoing demolition or deconstruction, parts from vehicles, machinery, other equipment, or other components.

1.2.10 Source Separation

The practice of administering and implementing a management strategy to identify and segregate unrelated waste at the first opportunity.

1.3 CONSTRUCTION WASTE (INCLUDES DEMOLITION DEBRIS/WASTE)

Divert a minimum of 60 percent by weight of the project construction waste and demolition debris/waste from the landfill or incinerator. Follow applicable industry standards in the management of waste. Apply sound environmental principles in the management of waste. (1) Practice efficient waste management when sizing, cutting, and installing products and materials and (2) use all reasonable means to divert construction waste and demolition debris/waste from landfills and incinerators and to facilitate the recycling or reuse of excess construction materials.

1.4 CONSTRUCTION WASTE MANAGEMENT

Implement a Construction Waste Management Program for the project. Take a pro-active, responsible role in the management of construction waste, recycling process, disposal of demolition debris/waste, and require all subcontractors, vendors, and suppliers to participate in the Construction Waste Management Program. Establish a process for clear tracking, and documentation of construction waste and demolition debris/waste.

1.4.1 Implementation of Construction Waste Management Program

Develop and document how the Construction Waste Management Program will be implemented in a Construction Waste Management Plan. Submit a Construction Waste Management Plan to the Contracting Officer for approval. Construction waste and demolition debris/waste materials include un-used construction materials not incorporated in the final work, as well as demolition debris/waste materials from demolition activities or deconstruction activities. In the management of waste, consider the availability of viable markets, the condition of materials, the ability to provide material in suitable condition and in a quantity acceptable to

available markets, and time constraints imposed by internal project completion mandates.

1.4.2 Oversight

The Environmental Manager, as specified in Section 01 57 19 TEMPORARY ENVIRONMENTAL CONTROLS, is responsible for overseeing and documenting results from executing the Construction Waste Management Plan for the project.

1.4.3 Special Programs

Implement special programs involving rebates or similar incentives related to recycling of construction waste and demolition debris/waste materials. Retain revenue or savings from salvaged or recycling, unless otherwise directed. Ensure firms and facilities used for recycling, reuse, and disposal are permitted for the intended use to the extent required by federal, state, and local regulations.

1.4.4 Special Instructions

Provide on-site instruction of appropriate separation, handling, recycling, salvage, reuse, and return methods to be used by all parties at the appropriate stages of the projects. Designation of single source separating or commingling will be clearly marked on the containers.

1.4.5 Waste Streams

Delineate waste streams and characterization, including estimated material types and quantities of waste, in the Construction Waste Management Plan. Manage all waste streams associated with the project. Typical waste streams are listed below. Include additional waste steams not listed:

a. Land Clearing Debris

b. Asphalt

c. Masonry and CMU

d. Concrete

e. Metals (Includes, but is not limited to, banding, stud trim, ductwork, piping, rebar, roofing, other trim, steel, iron, galvanized, stainless steel, aluminum, copper, zinc, bronze.)

f. Wood (nails and staples allowed)

g. Glass

h. Paper

i. Plastics (PET, HDPE,PVC,LDPE,PP,PS, Other)

j. Gypsum

k. Non-hazardous paint and paint cans

l. Carpet

m. Ceiling Tiles

n. Insulation

o. Beverage Containers

1.5 SUBMITTALS

Government approval is required for submittals with a "G" classification. Submittals not having a "G" classification are for Contractor Quality Control approval. Submit the following in accordance with Section 01 33 00 SUBMITTAL PROCEDURES:

SD-01 Preconstruction Submittals

Construction Waste Management Plan; G

SD-11 Closeout Submittals

Final Construction Waste Diversion Report; S

1.6 MEETINGS

Conduct Construction Waste Management meetings. After award of the Contract and prior to commencement of work, schedule and conduct a meeting with the Contracting Officer to discuss the proposed Construction Waste Management Plan and to develop a mutual understanding relative to the management of the Construction Waste Management Program and how waste diversion requirements will be met.

The requirements of this meeting may be fulfilled during the coordination and mutual Understanding meeting outlined in Section 01 45 00 QUALITY CONTROL. At a minimum, discuss and document waste management goals at following meetings:

a. Preconstruction meeting.

b. Regular site meetings.

c. Work safety meeting (if applicable).

1.7 CONSTRUCTION WASTE MANAGEMENT PLAN

Submit Construction Waste Management Plan within 15calendar days after contract award. Revise and resubmit Construction Waste Management Plan as necessary, in order for construction to begin.. Execute demolition or deconstruction activities in accordance with Section 02 41 00 DEMOLITION. Manage demolition debris/waste or deconstruction materials in accordance with the approved construction waste management plan.

An approved Construction Waste Management Plan will not relieve the Contractor of responsibility for compliance with applicable environmental regulations or meeting project cumulative waste diversion requirement. Ensure all subcontractors receive a copy of the approved Construction Waste Management Plan. The plan demonstrates how to meet the project waste diversion requirement. Also, include the following in the plan:

a. Identify the names of individuals responsible for waste management and waste management tracking, along with roles and responsibilities on the project.

b. Actions that will be taken to reduce solid waste generation, including coordination with subcontractors to ensure awareness and participation.

c. Description of the regular meetings to be held to address waste management.

d. Description of the specific approaches to be used in recycling/reuse of the various materials generated, including the areas on site and equipment to be used for processing, sorting, and temporary storage of materials.

e. Name of landfill and incinerator to be used.

f. Identification of local and regional re-use programs, including non-profit organizations such as schools, local housing agencies, and organization that accept used materials such as material exchange networks and resale stores. Include the name, location, phone number for each re-use facility identified, and provide a copy of the permit or license for each facility.

g. List of specific materials, by type and quantity, that will be salvaged for resale, salvaged and reused on the current project, salvaged and stored for reuse on a future project, or recycled. Identify the recycling facilities by name, address, and phone number.

h. Identification of materials that cannot be recycled or reused with an explanation or justification, to be approved by the Contracting Officer.

i. Description of the means by which materials identified in item (g) above will be protected from contamination.

j. Description of the means of transportation of the recyclable materials (whether materials will be site-separated and self-hauled to designated centers, or whether mixed materials will be collected by a waste hauler and removed from the site).

k. Copy of training plan for subcontractors and other services to prevent contamination by co-mingling materials identified for diversion and waste materials.

l. Identification of at least 5 construction or demolition material streams for diversion.

m. Detailed plan and distribution of waste diversion between buildings, when project is a part of a campus.

n. Facilities or subcontractors offering construction waste transport on-site or off-site must ensure that proper shipping orders, bill of lading, manifests, or other shipping documents containing waste diversion information meet requirements of 40 CFR 273 Universal Waste Management, 49 CFR 173 Shippers - General Requirements for Shipments and Packagings, and 49 CFR 178 Specifications for Packaging. Individuals signing manifests or other shipping documents should meet the minimum training requirements.

Distribute copies of the waste management plan to each subcontractor,

Environmental Manager, and the Contracting Officer.

1.8 RECORDS (DOCUMENTATION)

1.8.1 General

Maintain records to document the types and quantities of waste generated and diverted though re-use, recycling and sale to third parties; through disposal to a landfill or incinerator facility. Provide explanations for materials not recycled, reused or sold. Collect and retain manifests, weight tickets, sales receipts, and invoices specifically identifying diverted project waste materials or disposed materials.

1.8.2 Accumulated

Maintain a running record of materials generated and diverted from landfill disposal, including accumulated diversion rates for the project. Make records available to the Contracting Officer during construction or incidental demolition activities. Provide a copy of the diversion records to the Contracting Officer upon completion of the construction, incidental demolitions or minor deconstruction activities.

1.9 FINAL CONSTRUCTION WASTE DIVERSION REPORT

A Final Construction Waste Diversion Report is required at the end of the project. Provide Final Construction Waste Diversion Report 60 days prior to the Beneficial Occupancy Date (BOD).

1.10 COLLECTION

Collect, store, protect, and handle reusable and recyclable materials at the site in a manner which prevents contamination, and provides protection from the elements to preserve their usefulness and monetary value. Provide receptacles and storage areas designated specifically for recyclable and reusable materials and label them clearly and appropriately to prevent contamination from other waste materials. Keep receptacles or storage areas neat and clean.

Train subcontractors and other service providers to either separate waste streams or use the co-mingling method as described in the Construction Waste Management Plan. Handle hazardous waste and hazardous materials in accordance with applicable regulations and coordinate with Section 01 57 19 TEMPORARY ENVIRONMENTAL CONTROLS. Separate materials by one of the following methods:

1.10.1 Source Separation Method

Separate waste products and materials that are recyclable from trash and sort as described below into appropriately marked separate containers and then transport to the respective recycling facility for further processing. Deliver materials in accordance with recycling or reuse facility requirements (e.g., free of dirt, adhesives, solvents, petroleum contamination, and other substances deleterious to the recycling process). Separate materials into the category types as defined in the Construction Waste Management Plan.

1.10.2 Co-Mingled Method

Place waste products and recyclable materials into a single container and

then transport to an authorized recycling facility, which meets all applicable requirements to accept and dispose of recyclable materials in accordance with all applicable local, state and federal regulations. The Co-mingled materials must be sorted and processed in accordance with the approved Construction Waste Management Plan.

1.10.3 Other Methods

Other methods proposed by the Contractor may be used when approved by the Contracting Officer.

1.11 DISPOSAL

Control accumulation of waste materials and trash. Recycle or dispose of collected materials off-site at intervals approved by the Contracting Officer and in compliance with waste management procedures as described in the waste management plan. Except as otherwise specified in other sections of the specifications, dispose of in accordance with the following:

1.11.1 Reuse

Give first consideration to reusing construction and demolition materials as a disposition strategy. Recover for reuse materials, products, and components as described in the approved Construction Waste Management Plan. Coordinate with the Contracting Officer to identify onsite reuse opportunities or material sales or donation available through Government resale or donation programs. Sale of recovered materials is not allowed on the Installation. Consider the use of surplus industrial supply broker services, who match entities with reusable or repurpose industrial materials with entities with need of such materials.

1.11.2 Recycle

Recycle non-hazardous construction and demolition/debris materials that are not suitable for reuse. Track rejection of contaminated recyclable materials by the recycling facility. Rejected recyclables materials will not be counted as a percentage of diversion calculation. Recycle all fluorescent lamps, HID lamps, mercury (Hg) -containing thermostats and ampoules, and PCBs-containing ballasts and electrical components as directed by the Contracting Officer. Do not crush lamps on site as this creates a hazardous waste stream with additional handling requirements.

1.11.3 Waste

Dispose by landfill or incineration only those waste materials with no practical use, economic benefit, or recycling opportunity.

PART 2 PRODUCTS

Not used.

PART 3 EXECUTION

Not used. -- End of Section --

THIS PAGE INTENTIONALLY LEFT BLANK

SECTION 01 78 00

CLOSEOUT SUBMITTALS
05/19, CHG 1: 08/21

PART 1 GENERAL

1.1 REFERENCES

The publications listed below form a part of this specification to the extent referenced. The publications are referred to within the text by the basic designation only.

ASTM INTERNATIONAL (ASTM)

ASTM E1971	(2024) Standard Guide for Stewardship for the Cleaning of Commercial and Institutional Buildings

GREEN SEAL (GS)

GS-37	(2017) Cleaning Products for Industrial and Institutional Use

U.S. DEPARTMENT OF DEFENSE (DOD)

FC 1-300-09N	(2024) Navy and Marine Corps Design
UFC 1-300-08	(2023) Criteria for Transfer and Acceptance of DoD Real Property

1.2 DEFINITIONS

1.2.1 As-Built Drawings

As-built drawings are the marked-up drawings, maintained by the Contractor on-site, that depict actual conditions and deviations from the Contract Documents. These deviations and additions may result from coordination required by, but not limited to: contract modifications; official responses to submitted Requests for Information (RFI's); direction from the Contracting Officer; design that is the responsibility of the Contractor, and differing site conditions. Maintain the as-builts throughout construction as red-lined hard copies on site. These files serve as the basis for the creation of the record drawings.

1.2.2 Record Drawings

The record drawings are the final compilation of actual conditions reflected in the as-built drawings.

1.3 SOURCE DRAWING FILES

Request the full set of electronic drawings, in the source format, for Record Drawing preparation, after award and at least 30 days prior to required use.

1.3.1 Terms and Conditions

Data contained on these electronic files must not be used for any purpose other than as a convenience in the preparation of construction drawings and data for the referenced project. Any other use or reuse is at the sole risk of the Contractor and without liability or legal exposure to the Government. The Contractor must make no claim and waives to the fullest extent permitted by law, any claim or cause of action of any nature against the Government, its agents or sub consultants that may arise out of or in connection with the use of these electronic files. The Contractor must, to the fullest extent permitted by law, indemnify and hold the Government harmless against all damages, liabilities or costs, including reasonable attorney's fees and defense costs, arising out of or resulting from the use of these electronic files.

These electronic CAD drawing files are not construction documents. Differences may exist between the CAD files and the corresponding construction documents. The Government makes no representation regarding the accuracy or completeness of the electronic CAD files, nor does it make representation to the compatibility of these files with the Contractor hardware or software. In the event that a conflict arises between the signed and sealed construction documents prepared by the Government and the furnished Source drawing files, the signed and sealed construction documents govern. The Contractor is responsible for determining if any conflict exists. Use of these Source Drawing files does not relieve the Contractor of duty to fully comply with the contract documents, including and without limitation, the need to check, confirm and coordinate the work of all contractors for the project. If the Contractor uses, duplicates or modifies these electronic source drawing files for use in producing construction drawings and data related to this contract, remove all previous indicia of ownership (seals, logos, signatures, initials and dates).

1.4 SUBMITTALS

Government approval is required for submittals with a "G" classification. Submittals not having a "G" classification are for Contractor Quality Control approval. Submit the following in accordance with Section 01 33 00 SUBMITTAL PROCEDURES:

SD-03 Product Data

Warranty Management Plan

Warranty Tags

Final Cleaning

Spare Parts Data

SD-08 Manufacturer's Instructions

Posted Instructions

SD-11 Closeout Submittals

As-Built Drawings; G

Record Drawings; G,

Warranted Equipment and Materials

Certification of EPA Designated Items; G

Interim DD FORM 1354; G

1.5 SPARE PARTS DATA

Submit two copies of the Spare Parts Data list.

a. Indicate manufacturer's name, part number, and stock level required for test and balance, pre-commissioning, maintenance and repair activities. List those items that may be standard to the normal maintenance of the system.

1.6 WARRANTY MANAGEMENT

1.6.1 Warranty Management Plan

Develop a warranty management plan which contains information relevant to FAR 52.246-21 Warranty of Construction. At least 30 days before the planned pre-warranty conference, submit one set of the warranty management plan. Include within the warranty management plan all required actions and documents to assure that the Government receives all warranties to which it is entitled. The plan narrative must contain sufficient detail to render it suitable for use by future maintenance and repair personnel, whether tradesmen, or of engineering background, not necessarily familiar with this contract. The term "status" as indicated below must include due date and whether item has been submitted or was accomplished. Submit warranty information, made available during the construction phase, to the Contracting Officer for approval prior to each monthly pay estimate. Assemble approved information in a binder and turn over to the Government upon acceptance of the work. The construction warranty period must begin on the date of project acceptance and continue for the full product warranty period. Conduct a joint 4 month and 9 month warranty inspection, measured from time of acceptance; with the Contractor, Contracting Officer and the Customer Representative. The warranty management plan must include, but is not limited to, the following:

a. Roles and responsibilities of personnel associated with the warranty process, including points of contact and telephone numbers within the organizations of the Contractors, subcontractors, manufacturers or suppliers involved.

b. For each warranty, the name, address, telephone number, and e-mail of each of the guarantor's representatives nearest to the project location.

c. A list and status of delivery of Certificates of Warranty for extended warranty items, including roofs, HVAC balancing, pumps, motors, transformers, and for commissioned systems, such as fire protection and alarm systems, sprinkler systems, and lightning protection systems.

d. Warranted Equipment and Materials list for each warranted equipment, item, feature of construction or system indicating:

(1) Name of item.
(2) Model and serial numbers.
(3) Location where installed.

(4) Name and phone numbers of manufacturers or suppliers.
(5) Names, addresses and telephone numbers of sources of spare parts.
(6) Warranties and terms of warranty. Include one-year overall warranty of construction, including the starting date of warranty of construction. Items which have warranties longer than one year must be indicated with separate warranty expiration dates.
(7) Cross-reference to warranty certificates as applicable.
(8) Starting point and duration of warranty period.
(9) Summary of maintenance procedures required to continue the warranty in force.
(10) Cross-reference to specific pertinent Operation and Maintenance manuals.
(11) Organization, names and phone numbers of persons to call for warranty service.
(12) Typical response time and repair time expected for various warranted equipment.

e. The plans for attendance at the 4 and 9 month post-construction warranty inspections conducted by the Government.

f. Procedure and status of tagging of equipment covered by warranties longer than one year.

g. Copies of instructions to be posted near selected pieces of equipment where operation is critical for warranty or safety reasons.

1.6.2 Performance Bond

The Performance Bond must remain effective throughout the construction and warranty period.

a. In the event the Contractor fails to commence and diligently pursue any construction warranty work required, the Contracting Officer will have the work performed by others, and after completion of the work, will charge the remaining construction warranty funds of expenses incurred by the Government while performing the work, including, but not limited to administrative expenses.

b. In the event sufficient funds are not available to cover the construction warranty work performed by the Government at the Contractor's expense, the Contracting Officer will have the right to recoup expenses from the bonding company.

c. Following oral or written notification of required construction warranty repair work, respond in a timely manner. Written verification will follow oral instructions. Failure to respond will be cause for the Contracting Officer to proceed against the Contractor.

1.6.3 Pre-Warranty Conference

Prior to contract completion, and at a time designated by the Contracting Officer, meet with the Contracting Officer to develop a mutual understanding with respect to the requirements of this section. At this meeting, establish and review communication procedures for Contractor notification of construction warranty defects, priorities with respect to the type of defect, reasonable time required for Contractor response, and other details deemed necessary by the Contracting Officer for the execution of the construction warranty In connection with these requirements and at the time of the Contractor's quality control

completion inspection, furnish the name, telephone number and address of a licensed and bonded company which is authorized to initiate and pursue construction warranty work action on behalf of the Contractor. This point of contact must be located within the local service area of the warranted construction, be continuously available, and be responsive to Government inquiry on warranty work action and status. This requirement does not relieve the Contractor of any of its responsibilities in connection with other portions of this provision.

1.6.4 Warranty Tags

At the time of installation, tag each warranted item with a durable, oil and water resistant tag approved by the Contracting Officer. Attach each tag with a copper wire and spray with a silicone waterproof coating. Also, submit two record copies of the warranty tags showing the layout and design. The date of acceptance and the QC signature must remain blank until the project is accepted for beneficial occupancy. Show the following information on the tag.

Type of product/material	
Model number	
Serial number	
Contract number	
Warranty period from/to	
Inspector's signature	
Construction Contractor	
Address	
Telephone number	
Warranty contact	
Address	
Telephone number	
Warranty response time priority code	
WARNING - PROJECT PERSONNEL TO PERFORM ONLY OPERATIONAL MAINTENANCE DURING THE WARRANTY PERIOD.	

PART 2 PRODUCTS

2.1 CERTIFICATION OF EPA DESIGNATED ITEMS

Submit the Certification of EPA Designated Items as required by FAR 52.223-9 Estimate of Percentage of Recovered Material Content for EPA Designated Items and FAR 52-223-17 Affirmative Procurement of EPA designated items in Service and Construction Contracts. Include on the certification form the following information: project name, project number, Contractor name, license number, Contractor address, and certification. The certification will read as follows and be signed and dated by the Contractor. "I hereby certify the information provided herein is accurate and that the requisition/procurement of all materials listed on this form comply with current EPA standards for recycled/recovered materials content. The following exemptions may apply to the non-procurement of recycled/recovered content materials:

a. The product does not meet appropriate performance standards;

b. The product is not available within a reasonable time frame;

c. The product is not available competitively (from two or more sources);

d. The product is only available at an unreasonable price (compared with a comparable non-recycled content product)."_____

Record each product used in the project that has a requirement or option of containing recycled content, noting total price, total value of post-industrial recycled content, total value of post-consumer recycled content, exemptions (a, b, c, or d, as indicated), and comments. Recycled content values may be determined by weight or volume percent, but must be consistent throughout.

PART 3 EXECUTION

3.1 AS-BUILT DRAWINGS

Provide and maintain two black line print copies of the PDF contract drawings for As-Built Drawings. Maintain the as-builts throughout construction as red-lined hard copies on site and or red-lined PDF files. Submit As-Built Drawings 30 days prior to Beneficial Occupancy Date (BOD).

3.1.1 Markup Guidelines

Make comments and markup the drawings complete without reference to letters, memos, or materials that are not part of the As-Built drawing. Show what was changed, how it was changed, where item(s) were relocated and change related details. These working as-built markup prints must be neat, legible and accurate as follows:

a. Use base colors of red, green, and blue. Color code for changes as follows:

(1) Special (Blue) - Items requiring special information, coordination, or special detailing or detailing notes.

(2) Deletions (Red) - Over-strike deleted graphic items (lines), lettering in notes and leaders.

(3) Additions (Green) - Added items, lettering in notes and leaders.

b. Provide a legend if colors other than the "base" colors of red, green, and blue are used.

c. Add and denote any additional equipment or material facilities, service lines, incorporated under As-Built Revisions if not already shown in legend.

d. Use frequent written explanations on markup drawings to describe changes. Do not totally rely on graphic means to convey the revision.

e. Use legible lettering and precise and clear digital values when marking prints. Clarify ambiguities concerning the nature and application of change involved.

f. Wherever a revision is made, also make changes to related section views, details, legend, profiles, plans and elevation views, schedules, notes and call out designations, and mark accordingly to avoid conflicting data on all other sheets.

g. For deletions, cross out all features, data and captions that relate to that revision.

h. For changes on small-scale drawings and in restricted areas, provide large-scale inserts, with leaders to the applicable location.

i. Indicate one of the following when attaching a print or sketch to a markup print:

(1) Add an entire drawing to contract drawings

(2) Change the contract drawing to show changes on the drawing.

(3) Provided for reference only to further detail the initial design.

j. Incorporate all shop and fabrication drawings into the markup drawings.

3.1.2 As-Built Drawings Content

Show on the as-built drawings, but not limited to, the following information:

a. The actual location, kinds and sizes of all sub-surface utility lines. In order that the location of these lines and appurtenances may be determined in the event the surface openings or indicators become covered over or obscured, show by offset dimensions to two permanently fixed surface features the end of each run including each change in direction on the record drawings. Locate valves, splice boxes and similar appurtenances by dimensioning along the utility run from a reference point. Also record the average depth below the surface of each run.

b. The location and dimensions of any changes within the building structure.

c. Layout and schematic drawings of electrical circuits and piping.

d. Correct grade, elevations, cross section, or alignment of roads,

earthwork, structures or utilities if any changes were made from contract plans.

e. Changes in details of design or additional information obtained from working drawings specified to be prepared or furnished by the Contractor; including but not limited to shop drawings, fabrication, erection, installation plans and placing details, pipe sizes, insulation material, dimensions of equipment, and foundations.

f. The topography, invert elevations and grades of drainage installed or affected as part of the project construction.

g. Changes or Revisions which result from the final inspection.

h. Where contract drawings or specifications present options, show only the option selected for construction on the working as-built markup drawings.

i. If borrow material for this project is from sources on Government property, or if Government property is used as a spoil area, furnish a contour map of the final borrow pit/spoil area elevations.

j. Systems designed or enhanced by the Contractor, such as HVAC controls, fire alarm, fire sprinkler, and irrigation systems.

k. Changes in location of equipment and architectural features.

l. Modifications and compliance with FC 1-300-09N procedures.

m. Actual location of anchors, construction and control joints, etc., in concrete.

n. Unusual or uncharted obstructions that are encountered in the contract work area during construction.

o. Location, extent, thickness, and size of stone protection particularly where it will be normally submerged by water.

3.2 RECORD DRAWINGS

Prepare and provide Record Drawings and Source Documents in accordance with FC 1-300-09N. Provide four copies of Record Drawings and Documents on separate CDs or DVDs 30 days after BOD.

3.3 CLEANUP

Provide final cleaning in accordance with ASTM E1971 and submit two copies of the listing of completed final clean-up items. Leave premises "broom clean." Comply with GS-37 for general purpose cleaning and bathroom cleaning. Use only nonhazardous cleaning materials, including natural cleaning materials, in the final cleanup. Clean interior and exterior glass surfaces exposed to view; remove temporary labels, stains and foreign substances; polish transparent and glossy surfaces; vacuum carpeted and soft surfaces. Clean equipment and fixtures to a sanitary condition. Clean filters of operating equipment and comply with the Indoor Air Quality (IAQ) Management Plan. Clean debris from roofs, gutters, downspouts and drainage systems. Sweep paved areas and rake clean landscaped areas. Remove waste and surplus materials, rubbish and construction facilities from the site. Recycle, salvage, and return

construction and demolition waste from project in accordance with Section 01 57 19 TEMPORARY ENVIRONMENTAL CONTROLS, and 01 74 19 CONSTRUCTION WASTE MANAGEMENT AND DISPOSAL.

3.4 REAL PROPERTY RECORD

Refer to UFC 1-300-08 for instruction on completing the DD FORM 1354. Contact the Contracting Officer for any project specific information necessary to complete the DD FORM 1354.

3.4.1 Interim DD FORM 1354

Near the completion of Project, but a minimum of 60 days prior to final acceptance of the work, complete, update draft DD FORM 1354, and submit an accounting of all installed property with Interim DD FORM 1354. Include any additional assets, improvements, and alterations from the Draft DD FORM 1354.

3.4.2 Completed DD FORM 1354

For convenience, a blank fillable PDF DD FORM 1354 may be obtained at the following link:
www.esd.whs.mil/Portals/54/Documents/DD/forms/dd/dd1354.pdf

-- End of Section --

THIS PAGE INTENTIONALLY LEFT BLANK

SECTION 02 41 00

DEMOLITION
08/22

PART 1 GENERAL

1.1 REFERENCES

The publications listed below form a part of this specification to the extent referenced. The publications are referred to within the text by the basic designation only.

AMERICAN ASSOCIATION OF STATE HIGHWAY AND TRANSPORTATION OFFICIALS (AASHTO)

AASHTO M 145	(1991; R 2025) Standard Specification for Classification of Soils and Soil-Aggregate Mixtures for Highway Construction Purposes
AASHTO T 180	(2025) Standard Method of Test for Moisture-Density Relations of Soils Using a 4.54-kg (10-lb) Rammer and a 457-mm (18-in.) Drop

AMERICAN SOCIETY OF SAFETY PROFESSIONALS (ASSP)

ASSP A10.6	(2006) Safety & Health Program Requirements for Demolition Operations - American National Standard for Construction and Demolition Operations

U.S. ARMY CORPS OF ENGINEERS (USACE)

EM 385-1-1	(2024) Safety -- Safety and Occupational Health (SOH) Requirements

U.S. NATIONAL ARCHIVES AND RECORDS ADMINISTRATION (NARA)

40 CFR 61	National Emission Standards for Hazardous Air Pollutants

1.2 PROJECT DESCRIPTION

1.2.1 Definitions

1.2.1.1 Critical Root Zone (CRZ)

The critical root zone is the area around and under a tree where the majority of its roots are located. The CRZ is usually measured as a circle with a radius that's 1.5- foot for every inch of the tree's diameter at breast height (DBH), and a depth of 24 inches.

1.2.1.2 Demolition

Demolition is the process of tearing apart and removing any feature of a facility together with any related handling and disposal operations.

1.2.1.3 Deconstruction

Deconstruction is the process of taking apart a facility with the primary goal of preserving the value of all useful building materials.

1.2.1.4 Demolition Plan

Demolition Plan is the planned steps and processes for managing demolition activities and identifying the required sequencing activities and disposal mechanisms.

1.2.1.5 Deconstruction Plan

Deconstruction Plan is the planned steps and processes for dismantling all or portions of a structure or assembly, to include managing sequencing activities, storage, re-installation activities, salvage and disposal mechanisms.

1.2.2 Demolition Plan

Prepare a Demolition Plan and submit proposed demolition, and removal procedures for approval before work is started. Include in the plan procedures for careful removal and disposition of materials specified to be salvaged, coordination with other work in progress, a disconnection schedule of utility services, a detailed description of methods and equipment to be used for each operation and of the sequence of operations. Identify components and materials to be salvaged for reuse or recycling with reference to paragraph Existing Facilities to be Removed. Append tracking forms for all removed materials indicating type, quantities, condition, destination, and end use. Coordinate with Waste Management Plan in accordance with Section 01 74 19 CONSTRUCTION WASTE MANAGEMENT AND DISPOSAL. Provide procedures for safe conduct of the work in accordance with EM 385-1-1. Plan must be approved by Contracting Officer prior to work beginning.

1.2.3 General Requirements

Do not begin demolition until authorization is received from the Contracting Officer. The work of this section is to be performed in a manner that maximizes the value derived from the salvage and recycling of materials. Remove rubbish and debris from the station daily; do not allow accumulations inside or outside the buildings The work includes demolition,, salvage of identified items and materials, and removal of resulting rubbish and debris. Remove rubbish and debris from Government property daily, unless otherwise directed. Store materials that cannot be removed daily in areas specified by the Contracting Officer. In the interest of occupational safety and health, perform the work in accordance with EM 385-1-1, Section 17, Demolition, and other applicable Sections.

1.3 ITEMS TO REMAIN IN PLACE

Comply with FAR 52.236-9 to protect existing vegetation, structures, equipment, utilities, and improvements. Coordinate the work of this section with all other work indicated. Construct and maintain shoring, bracing, and supports as required. Ensure that structural elements are not overloaded. Increase structural supports or add new supports as may be required as a result of any cutting, removal, deconstruction, or demolition work performed under this contract. Do not overload structural elements . Provide new supports and reinforcement for existing

construction weakened by demolition, deconstruction, or removal work. Repairs, reinforcement, or structural replacement require approval by the Contracting Officer prior to performing such work.

1.3.1 Existing Construction Limits and Protection

Do not disturb existing construction beyond the extent indicated or necessary for installation of new construction. Provide temporary shoring and bracing for support of building components to prevent settlement or other movement. Provide protective measures to control accumulation and migration of dust and dirt in all work areas. Remove snow, dust, dirt, and debris from work areas daily.

1.3.2 Weather Protection

For portions of the building to remain, protect building interior and materials and equipment from the weather at all times. Where removal of existing roofing is necessary to accomplish work, have materials and workmen ready to provide adequate and temporary covering of exposed areas.

1.3.3 Trees

Protect the trees that are to remain and might be damaged during demolition or deconstruction by a 6 foot high chain link fence. Erect and secure fence to protect the critical root zone (CRZ) using a 1.5-foot protection radius for each 1 inch of tree diameter measured at breast height (DBH) or edge of tree canopy, whichever is greater. Replace any tree designated to remain that is damaged during the work under this contract and approved by the Contracting Officer.

1.3.4 Utility Service

Maintain existing utilities indicated to stay in service and protect against damage during demolition and deconstruction operations. Prior to start of work, utilities serving each area of alteration or removal will be shut off by the Government and disconnected and sealed by the Contractor .

1.3.5 Facilities

Protect electrical and mechanical services and utilities. Where removal of existing utilities and pavement is specified or indicated, provide approved barricades, temporary covering of exposed areas, and temporary services or connections for electrical and mechanical utilities. Floors, roofs, walls, columns, pilasters, and other structural components that are designed and constructed to stand without lateral support or shoring, and are determined to be in stable condition, must remain standing without additional bracing, shoring, or lateral support until demolished or deconstructed, unless directed otherwise by the Contracting Officer. Ensure that no elements determined to be unstable are left unsupported and place and secure bracing, shoring, or lateral supports as may be required as a result of any cutting, removal, deconstruction, or demolition work performed under this contract.

1.4 BURNING

The use of burning at the project site for the disposal of refuse and debris will not be permitted . Where burning is permitted, adhere to federal, state, and local regulations.

1.5 AVAILABILITY OF WORK AREAS

Areas in which the work is to be accomplished will be available at contract award.

1.6 SUBMITTALS

Government approval is required for submittals with a "G" classification. Submittals not having a "G" classification are for Contractor Quality Control approval. Submit the following in accordance with Section 01 33 00 SUBMITTAL PROCEDURES:

SD-01 Preconstruction Submittals

Demolition Plan; G

Existing Conditions

SD-07 Certificates

Notification; G

1.7 QUALITY ASSURANCE

Submit timely notification of demolitionand renovation projects to Federal, State, regional, and local authorities in accordance with 40 CFR 61, Subpart M. Notify the Regional Office of the United States Environmental Protection Agency (USEPA) and the Contracting Officer in writing 10 working days prior to the commencement of work in accordance with 40 CFR 61, Subpart M. Comply with federal, state, and local hauling and disposal regulations. In addition to the requirements of the "Contract Clauses," conform to the safety requirements contained in ASSP A10.6. Comply with the Environmental Protection Agency requirements specified. Use of explosives will not be permitted.

1.7.1 Dust and Debris Control

Prevent the spread of dust and debristo occupied portions of the building and avoid the creation of a nuisance or hazard in the surrounding area. Do not use water if it results in hazardous or objectionable conditions such as, but not limited to, ice, flooding, or pollution. Vacuum and dust the work area daily Sweep pavements as often as necessary to control the spread of debris that may result in foreign object damage potential to aircraft.

1.8 PROTECTION

1.8.1 Traffic Control Signs

a. Where pedestrian and driver safety is endangered in the area of removal work, use traffic barricades with flashing lights. Anchor barricades in a manner to prevent displacement by wind, jet or prop blast. Notify the Contracting Officer prior to beginning such work.

1.8.2 Protection of Personnel

Before, during and after the demolition work continuously evaluate the condition of the site specific features being demolished and take immediate action to protect all personnel working in and around the

project site. No area, section, or component of floors, roofs, walls, columns, pilasters, or other structural element will be allowed to be left standing without sufficient bracing, shoring, or lateral support to prevent collapse or failure while workmen remove debris or perform other work in the immediate area.

1.9 FOREIGN OBJECT DAMAGE (FOD)

Aircraft and aircraft engines are subject to FOD from debris and waste material lying on airfield pavements. Remove all such materials that may appear on operational aircraft pavements due to the Contractor's operations. If necessary, the Contracting Officer may require the Contractor to install a temporary barricade at the Contractor's expense to control the spread of FOD potential debris. Provide a barricade consisting of a fence covered with a fabric designed to stop the spread of debris. Anchor the fence and fabric to prevent displacement by winds or jet/prop blasts. Remove barricade when no longer required.

1.10 RELOCATIONS

Perform the removal and reinstallation of relocated items as indicated with workmen skilled in the trades involved. Repair or replace items to be relocated which are damaged by the Contractor with new undamaged items as approved by the Contracting Officer.

1.11 EXISTING CONDITIONS

Before beginning any demolition or deconstruction work, survey the site and examine the drawings and specifications to determine the extent of the work. Record existing conditions in the presence of the Contracting Officer or the Contracting Officer's Representative showing the condition of structures and other facilities adjacent to areas of alteration or removal. Photographs or electronic images with a minimum resolution of 3072 x 2304 pixels, capable of a print resolution of 300 dpi, will be acceptable as a record of existing conditions. Include in the record the elevation of the top of foundation walls, finish floor elevations, possible conflicting electrical conduits, plumbing lines, alarms systems, the location and extent of existing cracks and other damage and description of surface conditions that exist prior to starting work. It is the Contractor's responsibility to verify and document all required outages which will be required during the course of work, and to note these outages on the record document. Submit survey results to the Contracting Officer or the Contracting Officer's Representative.

PART 2 PRODUCTS

2.1 FILL MATERIAL

a. Comply with excavating, backfilling, and compacting procedures for soils used as backfill material to fill basements, voids, depressions or excavations resulting from demolition or deconstruction of structures. Provide fill material consisting of waste products from demolition or deconstruction until all waste appropriate for this purpose is consumed.

b. Provide fill material conforming to the definition of satisfactory soil material as defined in AASHTO M 145, Soil Classification Groups A-1, A-2-4, A-2-5 and A-3. In addition, fill material must be free from roots and other organic matter, trash, debris, frozen materials,

and stones larger than 2 inches in any dimension.

c. Proposed fill material must be sampled and tested by an approved soil testing laboratory, as follows:

Soil classification	AASHTO M 145
Moisture-density relations	AASHTO T 180, Method B or D

PART 3 EXECUTION

3.1 EXISTING FACILITIES TO BE REMOVED

Inspect and evaluate existing structures onsite for reuse. Disassemble existing construction scheduled to be removed for reuse. Dismantled and removed materials are to be separated, set aside, and prepared as specified, and stored or delivered to a collection point for reuse, remanufacture, recycling, or other disposal, as specified. Designate materials for reuse onsite whenever possible.

3.1.1 Utilities and Related Equipment

3.1.1.1 General Requirements

Do not interrupt existing utilities serving occupied or used facilities, except when authorized in writing by the Contracting Officer. Do not interrupt existing utilities serving facilities occupied and used by the Government except when approved in writing and then only after temporary utility services have been approved and provided. Do not begin demolition or deconstruction work until all utility disconnections have been made. Shut off and cap utilities for future use, as indicated.

3.1.1.2 Disconnecting Existing Utilities

Remove existing utilities , as indicated and terminate in a manner conforming to the nationally recognized code covering the specific utility and approved by the Contracting Officer. When utility lines are encountered but are not indicated on the drawings, notify the Contracting Officer prior to further work in that area. Remove meters and related equipment and deliver to a location on the station in accordance with instructions of the Contracting Officer.

3.1.2 Chain Link Fencing

Remove chain link fencing, gates and other related salvaged items scheduled for removal and transport to designated areas. Remove gates as whole units. Cut chain link fabric to 25 foot lengths and store in rolls off the ground.

3.1.3 Paving and Slabs

Remove groundscarifiedsawcut concrete and asphaltic concrete paving and slabs including aggregate base as indicated to a depth of 6 inches below existing adjacent grade. Provide neat sawcuts at limits of pavement removal as indicated. Move, grind and store pavement and slabs designated to be recycled and utilized in this project as directed by the Contracting Officer. Remove pavement and slabs not to be used in this project from

the installation at Contractor's expense.

3.1.4 Concrete

Saw concrete along straight lines to a depth of a minimum 2 inch. Make each cut in walls perpendicular to the face and in alignment with the cut in the opposite face. Break out the remainder of the concrete provided that the broken area is concealed in the finished work, and the remaining concrete is sound. At locations where the broken face cannot be concealed, grind smooth or saw cut entirely through the concrete. Sawcuts in existing concrete sidewalkroads parking areas must be at the nearest existing expansion joint or weakened plane joint and at full depth.

3.1.5 Patching

Where removals leave holes and damaged surfaces exposed in the finished work, patch and repair these holes and damaged surfaces to match adjacent finished surfaces, using on-site materials when available. Where new work is to be applied to existing surfaces, perform removals and patching in a manner to produce surfaces suitable for receiving new work. Make finished surfaces of patched area flush with the adjacent existing surface and match the existing adjacent surface as closely as possible to texture and finish. Provide patching as specified and indicated, and include the following:

a. Concrete and Masonry: Completely fill holes and depressions, left as a result of removals in existing masonry walls to remain, with an approved masonry patching material, applied in accordance with the manufacturer's printed instructions.

b. Where existing partitions have been removed leaving damaged or missing resilient tile flooring, patch to match the existing floor tile.

3.1.6 Electrical Equipment and Fixtures

3.1.6.1 Electrical Devices

Remove and salvage switches, switchgear, transformers, conductors including wire and nonmetallic sheathed and flexible armored cable, regulators, meters, instruments, plates, circuit breakers, panelboards, outlet boxes, and similar items. Box and tag these items for identification according to type and size.

3.1.6.2 Wiring Ducts or Troughs

Remove and salvage wiring ducts or troughs. Dismantle plug-in ducts and wiring troughs into unit lengths. Remove plug-in or disconnecting devices from the busway and store separately.

3.1.6.3 Conduit and Miscellaneous Items

Salvage conduit except where embedded in concrete or masonry. Consider corroded, bent, or damaged conduit as scrap metal. Sort straight and undamaged lengths of conduit according to size and type. Classify supports, knobs, tubes, cleats, and straps as debris to be removed and disposed.

3.1.7 Items With Unique/Regulated Disposal Requirements

Remove and dispose of items with unique or regulated disposal requirements in the manner dictated by law or in the most environmentally responsible manner.

3.2 CONCURRENT EARTH-MOVING OPERATIONS

Do not begin excavation, filling, and other earth-moving operations that are sequential to demolition or deconstruction work in areas occupied by structures to be demolished or deconstructed until all demolition and deconstruction in the area has been completed and debris removed. Fill holes, open basements and other hazardous openings.

3.3 DISPOSITION OF MATERIAL

3.3.1 Title to Materials

Except for salvaged items specified in related Sections, and for materials or equipment scheduled for salvage, all materials and equipment removed and not reused or salvaged, become the property of the Contractor and must be removed from Government property. Materials approved for storage by the Contracting Officer must be removed before completion of the contract. Title to materials resulting from demolition and deconstruction, and materials and equipment to be removed, is vested in the Contractor upon approval by the Contracting Officer. The Government will not be responsible for the condition or loss of, or damage to, such property after contract award. Showing for sale or selling materials and equipment on site is prohibited.

3.3.2 Reuse of Materials and Equipment

Remove and store materials and equipment listed in the Demolition Plan indicated to be reused or relocated to prevent damage, and reinstall as the work progresses. Coordinate the re-use of materials and equipment with the re-use requirements in accordance with Section 01 74 19 CONSTRUCTION WASTE MANAGEMENT AND DISPOSAL. Capture re-use of materials in the diversion calculations for the project.

3.3.3 Salvaged Materials and Equipment3.3.4 Unsalvageable and Non-Recyclable Material

Dispose of unsalvageable and non-recyclable noncombustible material in the disposal area located on-site..

3.4 CLEANUP

Remove debris and rubbish from project site and similar excavations. Remove and transport the debris in a manner that prevents spillage on streets or adjacent areas. Apply local regulations regarding hauling and disposal.

3.5 DISPOSAL OF REMOVED MATERIALS

3.5.1 Regulation of Removed Materials

Dispose of debris, rubbish, scrap, and other nonsalvageable materials resulting from removal operations with all applicable federal, state and local regulations as contractually specified in the Waste Management Plan.

Storage of removed materials on the project site is prohibited.

3.5.2 Burning on Government Property

Burning of materials removed from demolished and deconstructed structures will not be permitted on Government property.

3.5.3 Removal to Spoil Areas on Government Property

Transport noncombustible materials removed from demolition and deconstruction structures to designated spoil areas on Government property.

3.5.4 Removal from Government Property

Transport waste materials removed from demolished and deconstructed structures, except waste soil, from Government property for legal disposal. Dispose of waste soil as directed.

3.6 REUSE OF SALVAGED ITEMS

Recondition salvaged materials and equipment designated for reuse before installation. Replace items damaged during removal and salvage operations or restore them as necessary to usable condition.

-- End of Section --

THIS PAGE INTENTIONALLY LEFT BLANK

SECTION 03 30 00

CAST-IN-PLACE CONCRETE
02/19, CHG 8: 05/24

PART 1 GENERAL

1.1 REFERENCES

The publications listed below form a part of this specification to the extent referenced. The publications are referred to within the text by the basic designation only.

AMERICAN CONCRETE INSTITUTE (ACI)

ACI 117	(2010; R 2015) Specifications for Tolerances for Concrete Construction and Materials and Commentary
ACI 121R	(2008) Guide for Concrete Construction Quality Systems in Conformance with ISO 9001
ACI 301	(2020) Specifications for Structural Concrete
ACI 302.1R	(2015) Guide for Concrete Floor and Slab Construction
ACI 304.2R	(2017) Guide to Placing Concrete by Pumping Methods
ACI 304R	(2000; R 2009) Guide for Measuring, Mixing, Transporting, and Placing Concrete
ACI 305R	(2020) Guide to Hot Weather Concreting
ACI 306R	(2016) Guide to Cold Weather Concreting
ACI 308.1	(2011) Specification for Curing Concrete
ACI MNL-2	(2019; 11th Edition) ACI Manual of Concrete Inspection
ACI MNL-15	(2020) Field Reference Manual: Specifications for Concrete Construction ACI 301-20 with Selected ACI References

AMERICAN HARDBOARD ASSOCIATION (AHA)

AHA A135.4	(1995; R 2004) Basic Hardboard

AMERICAN WELDING SOCIETY (AWS)

AWS D1.4/D1.4M	(2018) Structural Welding Code - Reinforcing Steel

ASTM INTERNATIONAL (ASTM)

ASTM A184/A184M	(2019) Standard Specification for Welded Deformed Steel Bar Mats for Concrete Reinforcement
ASTM A615/A615M	(2022) Standard Specification for Deformed and Plain Carbon-Steel Bars for Concrete Reinforcement
ASTM A706/A706M	(2022a) Standard Specification for Low-Alloy Steel Deformed and Plain Bars for Concrete Reinforcement
ASTM A934/A934M	(2022) Standard Specification for Epoxy-Coated Prefabricated Steel Reinforcing Bars
ASTM A996/A996M	(2016) Standard Specification for Rail-Steel and Axle-Steel Deformed Bars for Concrete Reinforcement
ASTM C31/C31M	(2024) Standard Practice for Making and Curing Concrete Test Specimens in the Field
ASTM C33/C33M	(2023) Standard Specification for Concrete Aggregates
ASTM C39/C39M	(2023) Standard Test Method for Compressive Strength of Cylindrical Concrete Specimens
ASTM C42/C42M	(2020) Standard Test Method for Obtaining and Testing Drilled Cores and Sawed Beams of Concrete
ASTM C78/C78M	(2022) Standard Test Method for Flexural Strength of Concrete (Using Simple Beam with Third-Point Loading)
ASTM C94/C94M	(2023) Standard Specification for Ready-Mixed Concrete
ASTM C136/C136M	(2019) Standard Test Method for Sieve Analysis of Fine and Coarse Aggregates
ASTM C143/C143M	(2020) Standard Test Method for Slump of Hydraulic-Cement Concrete
ASTM C150/C150M	(2022) Standard Specification for Portland Cement
ASTM C172/C172M	(2017) Standard Practice for Sampling Freshly Mixed Concrete
ASTM C173/C173M	(2024) Standard Test Method for Air Content of Freshly Mixed Concrete by the Volumetric Method

ASTM C231/C231M	(2024) Standard Test Method for Air Content of Freshly Mixed Concrete by the Pressure Method
ASTM C260/C260M	(2010a; R 2016) Standard Specification for Air-Entraining Admixtures for Concrete
ASTM C311/C311M	(2024) Standard Test Methods for Sampling and Testing Fly Ash or Natural Pozzolans for Use in Portland-Cement Concrete
ASTM C330/C330M	(2017a) Standard Specification for Lightweight Aggregates for Structural Concrete
ASTM C494/C494M	(2019; E 2022) Standard Specification for Chemical Admixtures for Concrete
ASTM C595/C595M	(2023) Standard Specification for Blended Hydraulic Cements
ASTM C618	(2023; E 2023) Standard Specification for Coal Fly Ash and Raw or Calcined Natural Pozzolan for Use in Concrete
ASTM C803/C803M	(2023) Standard Test Method for Penetration Resistance of Hardened Concrete
ASTM C845/C845M	(2018) Standard Specification for Expansive Hydraulic Cement
ASTM C873/C873M	(2015) Standard Test Method for Compressive Strength of Concrete Cylinders Cast in Place in Cylindrical Molds
ASTM C900	(2015) Standard Test Method for Pullout Strength of Hardened Concrete
ASTM C920	(2018) Standard Specification for Elastomeric Joint Sealants
ASTM C989/C989M	(2024) Standard Specification for Slag Cement for Use in Concrete and Mortars
ASTM C1012/C1012M	(2018b) Standard Test Method for Length Change of Hydraulic-Cement Mortars Exposed to a Sulfate Solution
ASTM C1074	(2019; E 2021) Standard Practice for Estimating Concrete Strength by the Maturity Method
ASTM C1077	(2024) Standard Practice for Agencies Testing Concrete and Concrete Aggregates for Use in Construction and Criteria for Testing Agency Evaluation
ASTM C1107/C1107M	(2020) Standard Specification for Packaged Dry, Hydraulic-Cement Grout (Nonshrink)

ASTM C1157/C1157M	(2023) Standard Performance Specification for Hydraulic Cement
ASTM C1218/C1218M	(2020c) Standard Test Method for Water-Soluble Chloride in Mortar and Concrete
ASTM C1240	(2020) Standard Specification for Silica Fume Used in Cementitious Mixtures
ASTM C1260	(2023) Standard Test Method for Potential Alkali Reactivity of Aggregates (Mortar-Bar Method)
ASTM C1293	(2008; R 2015) Standard Test Method for Determination of Length Change of Concrete Due to Alkali-Silica Reaction
ASTM C1567	(2023) Standard Test Method for Potential Alkali-Silica Reactivity of Combinations of Cementitious Materials and Aggregate (Accelerated Mortar-Bar Method)
ASTM C1602/C1602M	(2022) Standard Specification for Mixing Water Used in Production of Hydraulic Cement Concrete
ASTM D1751	(2018) Standard Specification for Preformed Expansion Joint Filler for Concrete Paving and Structural Construction (Nonextruding and Resilient Bituminous Types)
ASTM D2628	(1991; R 2016) Standard Specification for Preformed Polychloroprene Elastomeric Joint Seals for Concrete Pavements
ASTM D2835	(1989; R 2017) Standard Specification for Lubricant for Installation of Preformed Compression Seals in Concrete Pavements
ASTM D3042	(2017) Standard Test Method for Insoluble Residue in Carbonate Aggregates
ASTM D5759	(2012; R 2020) Characterization of Coal Fly Ash and Clean Coal Combustion Fly Ash for Potential Uses
ASTM D6690	(2021) Standard Specification for Joint and Crack Sealants, Hot Applied, for Concrete and Asphalt Pavements
ASTM E96/E96M	(2024) Standard Test Methods for Gravimetric Determination of Water Vapor Transmission Rate of Materials
ASTM E329	(2023) Standard Specification for Agencies Engaged in Construction Inspection,

	Testing, or Special Inspection
ASTM E1155	(2020) Standard Test Method for Determining Floor Flatness and Floor Levelness Numbers
ASTM E1643	(2018a) Standard Practice for Selection, Design, Installation, and Inspection of Water Vapor Retarders Used in Contact with Earth or Granular Fill Under Concrete Slabs
ASTM E1745	(2017; R 2023) Standard Specification for Water Vapor Retarders Used in Contact with Soil or Granular Fill under Concrete Slabs

CONCRETE REINFORCING STEEL INSTITUTE (CRSI)

CRSI 10MSP	(2018; Errata 2019) Manual of Standard Practice
CRSI RB4.1	(2016) Supports for Reinforcement Used in Concrete

NATIONAL INSTITUTE OF STANDARDS AND TECHNOLOGY (NIST)

NIST PS 1	(2009) DOC Voluntary Product Standard PS 1-07, Structural Plywood

U.S. ARMY CORPS OF ENGINEERS (USACE)

COE CRD-C 104	(1980) Method of Calculation of the Fineness Modulus of Aggregate

1.2 DEFINITIONS

a. "Cementitious material" as used herein must include all portland cement, pozzolan, fly ash, slag cement, and silica fume.

b. "Exposed to public view" means situated so that it can be seen from eye level from a public location after completion of the building. A public location is accessible to persons not responsible for operation or maintenance of the building.

c. "Chemical admixtures" are materials in the form of powder or fluids that are added to the concrete to give it certain characteristics not obtainable with plain concrete mixes.

d. "Supplementary cementing materials" (SCM) include coal fly ash, silica fume, slag cement, natural or calcined pozzolans, and ultra-fine coal ash when used in such proportions to replace the portland cement that result in improvement to sustainability and durability and reduced cost.

e. "Design strength" (f'c) is the specified compressive strength of concrete at time(s) specified in this section to meet structural design criteria.

f. "Mass Concrete" is any concrete system that approaches a maximum temperature of 158 degrees F within the first 72 hours of placement.

In addition, it includes all concrete elements with a section thickness of 3 feet or more regardless of temperature.

g. "Mixture proportioning" is the process of designing concrete mixture proportions to enable it to meet the strength, service life and constructability requirements of the project while minimizing the initial and life-cycle cost.

h. "Mixture proportions" are the masses or volumes of individual ingredients used to make a unit measure (cubic meter or cubic yard) of concrete.

i. "Pozzolan" is a siliceous or siliceous and aluminous material, which in itself possesses little or no cementitious value but will, in finely divided form and in the presence of moisture, chemically react with calcium hydroxide at ordinary temperatures to form compounds possessing cementitious properties.

j. "Workability (or consistence)" is the ability of a fresh (plastic) concrete mix to fill the form/mould properly with the desired work (vibration) and without reducing the concrete's quality. Workability depends on water content, chemical admixtures, aggregate (shape and size distribution), cementitious content and age (level of hydration).

1.3 SUBMITTALS

Government approval is required for submittals with a "G" classification. Submittals not having a "G" classification are for Contractor Quality Control approval. Submit the following in accordance with Section 01 33 00 SUBMITTAL PROCEDURES:

SD-01 Preconstruction Submittals

Quality Control Program;

Quality Control Personnel Certifications;

Quality Control Organizational Chart

Laboratory Accreditation;

Maturity Method Data

SD-02 Shop Drawings

Formwork

Reinforcing Steel;

SD-03 Product Data

Joint Sealants;

Joint Filler;

Formwork Materials

Cementitious Materials;

Vapor Retarder and Vapor Barrier

Concrete Curing Materials

Reinforcement;

Admixtures

Nonshrink Grout

SD-05 Design Data

Concrete Mix Design; G

SD-06 Test Reports

Concrete Mix Design; G

Fly Ash

Pozzolan

Slag Cement

Aggregates

Compressive Strength Tests;

Air Content

Slump Tests

Water

SD-07 Certificates

Reinforcing Bars

Welder Qualifications

Safety Data Sheets

Field Testing Technician and Testing Agency

SD-08 Manufacturer's Instructions

Joint Sealants;

Curing Compound

1.4 MODIFICATION OF REFERENCES

Accomplish work in accordance with ACI publications except as modified herein. Consider the advisory or recommended provisions to be mandatory. Interpret reference to the "Building Official," the "Structural Engineer," and the "Architect/Engineer" to mean the Contracting Officer.

1.5 DELIVERY, STORAGE, AND HANDLING

Follow ACI 301, ACI 304R and ASTM A934/A934M requirements and recommendations. Do not deliver concrete until vapor retarder, forms, reinforcement, embedded items, and chamfer strips are in place and ready for concrete placement. Do not store concrete curing compounds or sealers with materials that have a high capacity to adsorb volatile organic compound (VOC) emissions. Do not store concrete curing compounds or sealers in occupied spaces.

1.5.1 Reinforcement

Store reinforcement of different sizes and shapes in separate piles or racks raised above the ground to avoid excessive rusting. Protect from contaminants such as grease, oil, and dirt. Ensure bar sizes can be accurately identified after bundles are broken and tags removed.

1.6 QUALITY ASSURANCE

1.6.1 Design Data

1.6.1.1 Concrete Mix Design

Sixty days minimum prior to concrete placement, submit a mix design for each strength and type of concrete. Submit all documentation required in ACI 301 Section 4 and as specified in this section. Submit a complete list of materials including type; brand; source and amount of cement, supplementary cementitious materials, and admixtures; and applicable reference specifications. Submit mill test and all other test for cement, supplementary cementitious materials, aggregates, and admixtures. Provide documentation of maximum nominal aggregate size, gradation analysis, percentage retained and passing sieve, and a graph of percentage retained verses sieve size. Provide mix proportion data using at least three different water-cementitious material ratios for each type of mixture, which produce a range of strength encompassing those required for each type of concrete required. If source material changes, resubmit mix proportion data using revised source material. Provide only materials that have been proven by trial mix studies to meet the requirements of this specification, unless otherwise approved in writing by the Contracting Officer. Indicate clearly in the submittal where each mix design is used when more than one mix design is submitted. Resubmit data on concrete components if the qualities or source of components changes. Required average strength can be documented by field experience if field strength test data are available and represent a single group of at least 10 consecutive strength tests for one mixture, using materials and conditions similar to those expected for work, and encompassing a period of not less than 45 days. The average of field strength tests shall equal or exceed fcr'. Changes in materials, conditions, and proportions within the test record shall not have been more closely restricted than those for the proposed work. Test records shall not be more than 24 months old. Obtain mix design approval from the contracting officer prior to concrete placement.

1.6.2 Shop Drawings

1.6.2.1 Formwork

Drawings showing details of formwork including, but not limited to; joints, supports, studding and shoring, and sequence of form and shoring

removal. Indicate placement schedule, construction, location and method of forming control joints. Include locations of inserts, conduit, sleeves and other embedded items. Reproductions of contract drawings are unacceptable.

Design, fabricate, erect, support, brace, and maintain formwork so that it is able to support, without failure, all vertical and lateral loads that may reasonably be anticipated to be applied to the formwork.

1.6.2.2 Reinforcing Steel

Indicate bending diagrams, assembly diagrams, splicing and laps of bars, shapes, dimensions, and details of bar reinforcing, accessories, and concrete cover. Do not scale dimensions from structural drawings to determine lengths of reinforcing bars. Reproductions of contract drawings are unacceptable.

1.6.3 Control Submittals

1.6.3.1 Safety Data Sheets

Submit Safety Data Sheets (SDS) for all materials that are regulated for hazardous health effects. SDS must be readily accessible during each work shift to employees when they are at the construction site.

1.6.4 Test Reports

1.6.4.1 Fly Ash and Pozzolan

Submit test results in accordance with ASTM C618 for fly ash and pozzolan. Submit test results performed within 6 months of submittal date.

1.6.4.2 Slag Cement

Submit test results in accordance with ASTM C989/C989M for slag cement. Submit test results performed within 6 months of submittal date.

1.6.4.3 Aggregates

Submit test results in accordance with ASTM C33/C33M, or ASTM C330/C330M for lightweight aggregate, and ASTM C1293 or ASTM C1567 as required in the paragraph titled ALKALI-AGGREGATE REACTION.

1.6.5 Quality Control Program

Develop and submit for approval a concrete quality control program in accordance with the guidelines of ACI 121R and as specified herein. The plan must include approved laboratories. Provide direct oversight for the concrete qualification program inclusive of associated sampling and testing. All quality control reports must be provided to the Contracting Officer, Quality Manager and Concrete Supplier. Maintain a copy of ACI MNL-15 and CRSI 10MSP at project site.

1.6.6 Quality Control Personnel Certifications

The Contractor must submit for approval the responsibilities of the various quality control personnel, including the names and qualifications of the individuals in those positions and a quality control organizational chart defining the quality control hierarchy and the responsibility of the

various positions. Quality control personnel must be employed by the Contractor.

Submit American Concrete Institute certification for the following:

a. CQC personnel responsible for inspection of concrete operations.

b. Lead Foreman or Journeyman of the Concrete Placing, Finishing, and Curing Crews.

c. Field Testing Technicians: ACI Concrete Field Testing Technician, Grade I.

1.6.6.1 Quality Manager Qualifications

The quality manager must hold a current license as a professional engineer in a U.S. state or territory with experience on at least five similar projects. Evidence of extraordinary proven experience may be considered by the Contracting Officer as sufficient to act as the Quality Manager.

1.6.6.2 Field Testing Technician and Testing Agency

Submit data on qualifications of proposed testing agency and technicians for approval by the Contracting Officer prior to performing testing on concrete.

a. Work on concrete under this contract must be performed by an ACI Concrete Field Testing Technician Grade 1 qualified in accordance with ACI MNL-2 or equivalent. Equivalent certification programs must include requirements for written and performance examinations as stipulated in ACI MNL-2.

b. Testing agencies that perform testing services on reinforcing steel must meet the requirements of ASTM E329.

c. Testing agencies that perform testing services on concrete materials must meet the requirements of ASTM C1077.

1.6.7 Laboratory Qualifications for Concrete Qualification Testing

The concrete testing laboratory must have the necessary equipment and experience to accomplish required testing. The laboratory must meet the requirements of ASTM C1077 and be Cement and Concrete Reference Laboratory (CCRL) inspected.

1.6.8 Laboratory Accreditation

Laboratory and testing facilities must be provided by and at the expense of the Contractor. The laboratories performing the tests must be accredited in accordance with ASTM C1077, including ASTM C78/C78M and ASTM C1260. The accreditation must be current and must include the required test methods, as specified. Furthermore, the testing must comply with the following requirements:

a. Aggregate Testing and Mix Proportioning: Aggregate testing and mixture proportioning studies must be performed by an accredited laboratory and under the direction of a registered professional engineer in a U.S. state or territory competent in concrete materials who is competent in concrete materials and must sign all reports and designs.

b. Acceptance Testing: Furnish all materials, labor, and facilities required for molding, curing, testing, and protecting test specimens at the site and in the laboratory. Furnish and maintain boxes or other facilities suitable for storing and curing the specimens at the site while in the mold within the temperature range stipulated by ASTM C31/C31M.

c. Contractor Quality Control: All sampling and testing must be performed by an approved, onsite, independent, accredited laboratory.

1.7 QUALIFICATIONS FOR WELDING WORK

Welding procedures must be in accordance with AWS D1.4/D1.4M.

Verify that Welder qualifications are in accordance with AWS D1.4/D1.4M for welding of reinforcement or under an equivalent qualification test approved in advance. Welders are permitted to do only the type of welding for which each is specifically qualified.

PART 2 PRODUCTS

2.1 FORMWORK MATERIALS

a. Form-facing material in contact with concrete must be lumber, plywood, tempered concrete-form-grade hardboard, metal, plastic, or treated paper that creates specified appearance and texture of concrete surface. Submit product information on proposed form-facing materials if different from that specified herein.

b. Design formwork, shores, reshores, and backshores to support loads transmitted to them and to comply with applicable building code requirements.

c. Design formwork and shoring for load redistribution resulting from stressing of post-tensioned reinforcement. Ensure that formwork allows movement resulting from application of prestressing force.

d. Design formwork to withstand pressure resulting from placement and vibration of concrete and to maintain specified tolerances.

e. Design formwork to accommodate waterstop materials in joints at locations indicated in Contract Documents.

f. Provide temporary openings in formwork if needed to facilitate cleaning and inspection.

g. Design formwork joints to inhibit leakage of mortar.

h. Limit deflection of facing materials for concrete surfaces exposed to view to 1/240 of center-to-center spacing of facing supports.

i. Do not use earth cuts as forms for vertical or sloping surfaces.

j. Submit product information on proposed form-facing materials if different from that specified herein.

n. Submit manufacturer's product data on form liner proposed for use with each formed surface.

2.1.1 Wood Forms

Use lumber as follows. Provide lumber that is square edged or tongue-and-groove boards, free of raised grain, knotholes, or other surface defects. Provide plywood that complies with NIST PS 1, B-B concrete form panels or better or AHA A135.4, hardboard for smooth form lining. Submit data verifying that composite wood products contain no urea formaldehyde resins. Virgin wood used must be FSC-certified.

2.1.1.1 Concrete Form Plywood (Standard Rough)

Provide plywood that conforms to NIST PS 1, B-B, concrete form, not less than 5/8-inch thick.

2.1.1.2 Overlaid Concrete Form Plywood (Standard Smooth)

Provide plywood that conforms to NIST PS 1, B-B, high density form overlay, not less than 5/8-inch thick.

2.1.2 Plastic Forms

Provide plastic forms that contain a minimum of 50 percent post-consumer recycled content, or a minimum of 50 percent post-industrial recycled content.

2.1.3 Steel Forms

Provide steel form surfaces that do not contain irregularities, dents, or sags.

2.2 FORMWORK ACCESSORIES

a. Use commercially manufactured formwork accessories, including ties and hangers.

b. Form ties and accessories must not reduce the effective cover of the reinforcement.

2.2.1 Form Ties

a. Use form ties with ends or end fasteners that can be removed without damage to concrete.

b. Where indicated in Contract Documents, use form ties with integral water barrier plates or other acceptable positive water barriers in walls.

c. The breakback distance for ferrous ties must be at least 2 in. for Surface Finish-2.0 or Surface Finish-3.0, as defined in ACI 301.

d. If the breakback distance is less than 3/4 in., use coated or corrosion-resistant ties.

e. Submit manufacturer's data sheet on form ties.

2.2.2 Chamfer Materials

Use lumber materials with dimensions of 3/4 x 3/4 in.

2.2.3 Construction and movement joints

a. Submit details and locations of construction joints in accordance with the requirements herein.

b. Locate construction joints within middle one-third of spans of slabs, beams, and girders. If a beam intersects a girder within the middle one-third of girder span, the distance between the construction joint in the girder and the edge of the beam must be at least twice the width of the larger member.

c. For members with post-tensioning tendons, locate construction joints where tendons pass through centroid of concrete section.

d. Locate construction joints in walls and columns at underside of slabs, beams, or girders and at tops of footings or slabs.

e. Make construction joints perpendicular to main reinforcement.

f. Provide movement joints where indicated in Contract Documents or in accepted alternate locations.

g. Submit location and detail of movement joints if different from those indicated in Contract Documents.

h. Submit manufacturer's data sheet on expansion joint materials.

i. Provide keyways where indicated in Contract Documents. Longitudinal keyways indicated in Contract Documents must be at least 1-1/2 in. deep, measured perpendicular to the plane of the joint.

2.2.4 Other Embedded items

Use sleeves, inserts, anchors, and other embedded items of material and design indicated in Contract Documents.

2.3 CONCRETE MATERIALS

2.3.1 Cementitious Materials

2.3.1.1 Portland Cement

a. Unless otherwise specified, provide cement that conforms to ASTM C150/C150M Type I or II.

b. Use one brand and type of cement for formed concrete having exposed-to-view finished surfaces.

c. Submit information along with evidence demonstrating compliance with referenced standards. Submittals must include types of cementitious materials, manufacturing locations, shipping locations, and certificates showing compliance.

d. Cementitious materials must be stored and kept dry and free from contaminants.

2.3.1.2 Blended Cements

a. Blended cements must conform to ASTM C595/C595M Type IP IS or ASTM C1157/C1157M Type GU.

b. Slag cement added to the Type IP or Type IS blended cements must meet ASTM C989/C989M.

c. The pozzolan added to the Type IP or Type IT blended cements must meet ASTM C618 Class F and must be interground with the cement clinker. The manufacturer must state in writing that the amount of pozzolan in the finished cement will not vary more than plus or minus 5 mass percent of the finished cement from lot-to-lot or within a lot. The percentage and type of pozzolan used in the blend must not change from that submitted for the aggregate evaluation and mixture proportioning.

2.3.1.3 Fly Ash

a. ASTM C618, Class F except that the maximum allowable loss on ignition must not exceed 6 percent.

b. If fly ash is used it shall range from 15 to 20 percent by weight of cementitious material, provided the fly ash does not reduce the amount of cement in the concrete mix below the minimum requirements of local building codes. Where the use of fly ash cannot meet the minimum level,it shall not be used. Report the chemical analysis of the fly ash in accordance with ASTM C311/C311M. Evaluate and classify fly ash in accordance with ASTM D5759.

2.3.1.4 Slag Cement

ASTM C989/C989M, Grade 120.

2.3.1.5 Silica Fume

Silica fume must conform to ASTM C1240, including the optional limits on reactivity with cement alkalis. Silica fume may be furnished as a dry, densified material or as slurry. Proper mixing is essential to accomplish proper distribution of the silica fume and avoid agglomerated silica fume which can react with the alkali in the cement resulting in premature and extensive concrete damage. Supervision at the batch plant, finishing, and curing is essential. Provide at the Contractor's expense the services of a manufacturer's technical representative, experienced in mixing, proportioning, placement procedures, and curing of concrete containing silica fume. This representative must be present on the project prior to and during at least the first 4 days of concrete production and placement using silica fume.

2.3.1.6 Other Supplementary Cementitious Materials

Natural pozzolan must be raw or calcined and conform to ASTM C618, Class N, including the optional requirement for uniformity.

Ultra Fine Fly Ash (UFFA) and Ultra Fine Pozzolan (UFP) must conform to ASTM C618, Class F or N, and the following additional requirements:

a. The strength activity index at 28 days of age must be at least 95 percent of the control specimens.

b. The average particle size must not exceed 6 microns.

c. The sum of SiO_2 plus Al_2O_3 plus Fe_2O_3 must be greater than 77 percent.

2.3.2 Water

a. Water or ice must comply with the requirements of ASTM C1602/C1602M.

b. Minimize the amount of water in the mix. Improve workability by adjusting the grading of the aggregate and using admixture rather than by adding water.

c. Water must be potable; free from injurious amounts of oils, acids, alkalis, salts, organic materials, or other substances deleterious to concrete.

d. Protect mixing water and ice from contamination during storage and delivery.

e. Submit test report showing water complies with ASTM C1602/C1602M.

f. When nonpotable source is proposed for use, submit documentation on effects of water on strength and setting time in compliance with ASTM C1602/C1602M.

2.3.3 Aggregate

2.3.3.1 Normal-Weight Aggregate

a. Aggregates must conform to ASTM C33/C33M.

b. Aggregates used in concrete must be obtained from the same sources and have the same size range as aggregates used in concrete represented by submitted field test records or used in trial mixtures.

c. Provide sand that is at least 50 percent acid insoluble based on ASTM D3042.

d. Store and handle aggregate in a manner that will avoid segregation and prevents contamination by other materials or other sizes of aggregates. Store aggregates in locations that will permit them to drain freely. Do not use aggregates that contain frozen lumps.

e. Submit types, pit or quarry locations, producers' names, aggregate supplier statement of compliance with ASTM C33/C33M, and ASTM C1293 expansion data not more than 18 months old.

2.3.4 Admixtures

a. Chemical admixtures must conform to ASTM C494/C494M.

b. Air-entraining admixtures must conform to ASTM C260/C260M.

c. Do not use calcium chloride admixtures.

e. Use a corrosion-inhibiting admixture for concrete classified under exposure category C1.

f. Admixtures used in concrete must be the same as those used in the

concrete represented by submitted field test records or used in trial mixtures.

g. Protect stored admixtures against contamination, evaporation, or damage.

h. To ensure uniform distribution of constituents, provide agitating equipment for admixtures used in the form of suspensions or unstable solutions. Protect liquid admixtures from freezing and from temperature changes that would adversely affect their characteristics.

i. Submit types, brand names, producers' names, manufacturer's technical data sheets, and certificates showing compliance with standards required herein.

2.4 MISCELLANEOUS MATERIALS

2.4.1 Concrete Curing Materials

Provide concrete curing material in accordance with ACI 301 Section 5 and ACI 308.1 Section 2. Submit product data for concrete curing compounds. Submit manufactures instructions for placement of curing compound.

2.4.2 Nonshrink Grout

Nonshrink grout in accordance with ASTM C1107/C1107M.

2.4.3 Expansion/Contraction Joint Filler

ASTM D1751 Type I or Type II. Material must be 1 inch thick, unless otherwise indicated.

2.4.4 Joint Sealants

Submit manufacturer's product data, indicating VOC content.

2.4.4.1 Horizontal Surfaces, 3 Percent Slope, Maximum

ASTM D6690 or ASTM C920, Type M, Class 25, Use T.

2.4.4.2 Vertical Surfaces Greater Than 3 Percent Slope

ASTM C920, Type M, Grade NS, Class 25, Use T.

2.4.4.3 Preformed Polychloroprene Elastomeric Type

ASTM D2628.

2.4.4.4 Lubricant for Preformed Compression Seals

ASTM D2835.

2.4.5 Vapor Retarder and Vapor Barrier

ASTM E1745 Class C polyethylene sheeting, minimum 10 mil thickness or other equivalent material with a maximum permeance rating of 0.04 perms per ASTM E96/E96M.

Consider plastic vapor retarders and adhesives with a high recycled

content, low toxicity low VOC (Volatile Organic Compounds) levels.

2.4.6 Dovetail Anchor Slot

Preformed metal slot approximately 1 inch by 1 inch of not less than 22 gage galvanized steel cast in concrete. Coordinate actual size and throat opening with dovetail anchors and provide with removable filler material.

2.5 CONCRETE MIX DESIGN

2.5.1 Properties and Requirements

a. Use materials and material combinations listed in this section and the contract documents.

b. Cementitious material content must be adequate for concrete to satisfy the specified requirements for strength, w/cm, durability, and finishability described in this section and the contract documents.

The minimum cementitious material content for concrete used in floors must meet the following requirements:

Nominal maximum size of aggregate, in.	Minimum cementitious material content, pounds per cubic yard
1-1/2	470
1	520
3/4	540
3/8	610

c. Selected target slump must meet the requirements this section, the contract documents, and must not exceed 9 in. Concrete must not show visible signs of segregation.

d. The target slump must be enforced for the duration of the project. Determine the slump by ASTM C143/C143M. Slump tolerances must meet the requirements of ACI 117.

e. The nominal maximum size of coarse aggregate for a mixture must not exceed three-fourths of the minimum clear spacing between reinforcement, one-fifth of the narrowest dimension between sides of forms, or one-third of the thickness of slabs or toppings.

f. Concrete must be air entrained for members assigned to Exposure Class F1, F2, or F3. The total air content must be in accordance with the requirements of the paragraph titled DURABILITY.

g. Measure air content at the point of delivery in accordance with ASTM C173/C173M or ASTM C231/C231M.

h. Concrete for slabs to receive a hard-troweled finish must not contain an air-entraining admixture or have a total air content greater than 3 percent.

i. Concrete properties and requirements for each portion of the structure are specified in the table below. Refer to the paragraph titled DURABILITY for more details on exposure categories and their requirements.

	Minimum *f'c* psi	**Exposure Categories^**	**Miscellaneous Requirements**
Slabs-on-ground	4,000 at 28 days	S0 ; C0; W0; F0 and F2	

2.5.2 Durability

2.5.2.1 Alkali-Aggregate Reaction

Do not use any aggregate susceptible to alkali-carbonate reaction (ACR). Use one of the three options below for qualifying concrete mixtures to reduce the potential of alkali-silica reaction (ASR):

a. For each aggregate used in concrete, the expansion result determined in accordance with ASTM C1293 must not exceed 0.04 percent at one year.

b. For each aggregate used in concrete, the expansion result of the aggregate and cementitious materials combination determined in accordance with ASTM C1567 must not exceed 0.10 percent at an age of 16 days.

2.5.2.2 Freezing and Thawing Resistance

a. Provide concrete meeting the following requirements based on exposure class assigned to members for freezing-and-thawing exposure in Contract Documents:

Exposure class	**Maximum *w/cm****	**Minimum *f'c*, psi**	**Air content**	**Additional Requirements**
F0	N/A	2500	N/A	
F1	0.55	3500	Depends on aggregate size	N/A

Exposure class	Maximum *w/cm**	Minimum *f'c*, psi	Air content	Additional Requirements
F2	0.45	4000	Depends on aggregate size	See limits on maximum cementitious material by mass
F3	0.40	5000	Depends on aggregate size	See limits on maximum cementitious material by mass
F3 plain concrete	0.45	4500	Depends on aggregate size	See limits on maximum cementitious material by mass

*The maximum *w/cm* limits do not apply to lightweight concrete.

b. Concrete must be air entrained for members assigned to Exposure Class F1, F2, or F3. The total air content must meet the requirements of the following table:

Nominal maximum aggregate size, in.	Total air content, percent*^	
	Exposure Class F2 and F3	Exposure Class F1
3/8	7.5	6.0
1/2	7.0	5.5
3/4	6.0	5.0
1	6.0	4.5
1-1/2	5.5	4.5
2	5.0	4.0
3	5.5	3.5

*Tolerance on air content as delivered must be plus/minus 1.5 percent.

^For f'c greater than 5000 psi, reducing air content by 1.0 percentage point is acceptable.

c. Submit documentation verifying compliance with specified requirements.

d. For sections of the structure that are assigned Exposure Class F3, submit certification on cement composition verifying that concrete mixture meets the requirements of the following table:

Cementitious material	Maximum percent of total cementitious material by mass*
Fly ash or other pozzolans conforming to ASTM C618	25
Slag cement conforming to ASTM C989/C989M	50
Silica fume conforming to ASTM C1240	10
Total of fly ash or other pozzolans, slag cement, and silica fume	50^
Total of fly ash or other pozzolans and silica fume	35^

*Total cementitious material also includes ASTM C150/C150M, ASTM C595/C595M, ASTM C845/C845M, and ASTM C1157/C1157M cement. The maximum percentages above must include:

i. Fly ash or other pozzolans present in ASTM C1157/C1157M or ASTM C595/C595M Type IP blended cement.

ii. Slag cement present in ASTM C1157/C1157M or ASTM C595/C595M Type IS blended cement.

iii. Silica fume conforming to ASTM C1240 present in ASTM C1157/C1157M or ASTM C595/C595M Type IP blended cement.

^Fly ash or other pozzolans and silica fume must constitute no more than 25 percent and 10 percent, respectively, of the total mass of the cementitious materials.

2.5.2.3 Corrosion and Chloride Content

a. Provide concrete meeting the requirements of the following table based on the exposure class assigned to members requiring protection against reinforcement corrosion in Contract Documents.

b. Submit documentation verifying compliance with specified requirements.

c. Water-soluble chloride ion content contributed from constituents including water, aggregates, cementitious materials, and admixtures must be determined for the concrete mixture by ASTM C1218/C1218M at age between 28 and 42 days.

d. The maximum water-soluble chloride ion (Cl-) content in concrete, percent by mass of cement is as follows:

Exposure class	Maximum *w/cm**	Minimum f'c, psi	Maximum water-soluble chloride ion (CL-) content in concrete, percent by mass of cement
Reinforced concrete			
C0	N/A	2500	1.00
C1	N/A	2500	0.30
C2	0.4	5000	0.15
Prestressed concrete			
C0	N/A	2500	0.06
C1	N/A	2500	0.06
C2	0.4	5000	0.06

*The maximum w/cm limits do not apply to lightweight concrete.

2.5.2.4 Sulfate Resistance

a. Provide concrete meeting the requirements of the following table based on the exposure class assigned to members for sulfate exposure.

Exposure class	Maximum w/cm	Minimum f'c, psi	Required cementitious materials-types			Calcium chloride admixture
			ASTM [illegible]	ASTM [illegible]	ASTM [illegible]	
S0	N/A	2500	N/A	N/A	N/A	No restrictions
S1	0.50	4000	II*^	Types with (MS) designation	MS	No restrictions
S2	0.45	4500	V^	Types with (HS) designation	HS	Not permitted
S3	0.45	4500	V + pozzolan or slag cement**	Types with (HS) designation plus pozzolan or slag cement**	HS + pozzolan or slag cement**	Not permitted
S3	0.40	5000	V***	Types with (HS) designation	HS	Not permitted

* For seawater exposure, other types of portland cements with tricalcium aluminate (C3A) contents up to 10 percent are acceptable if the w/cm does not exceed 0.40.

** The amount of the specific source of the pozzolan or slag cement to be used shall be at least the amount determined by test or service record to improve sulfate resistance when used in concrete containing Type V cement. Alternatively, the amount of the specific source of the pozzolan or slag used shall not be less than the amount tested in accordance with ASTM C1012/C1012M and meeting the requirements maximum

expansion requirements listed herein.

*** If Type V cement is used as the sole cementitious material, the optional sulfate requirement of 0.040 percent maximum expansion in ASTM C150/C150M shall be required.

^ Other available types of cement, such as Type III or Type I, are acceptable in exposure classes S1 or S2 if the C3A contents are less than 8 or 5 percent, respectively.

b. The maximum w/cm limits for sulfate exposure do not apply to lightweight concrete.

c. Alternative combinations of cementitious materials of those listed in this paragraph are acceptable if they meet the maximum expansion requirements listed in the following table:

Exposure class	**Maximum expansion when tested using ASTM C1012/C1012M**		
	At 6 months	**At 12 months**	**At 18 months**
S1	0.10 percent	N/A	N/A
S2	0.05 percent	0.10 percent^	N/A
S3	N/A	N/A	0.10 percent

^The 12-month expansion limit applies only when the measured expansion exceeds the 6-month maximum expansion limit.

2.5.2.5 Concrete Temperature

The temperature of concrete as delivered must not exceed 95°F.

2.5.2.6 Concrete Permeability

a. Provide concrete meeting the requirements of the following table based on exposure class assigned to members requiring low permeability in the Contract Documents.

Exposure class	**Maximum *w/cm****	**Minimum f'c, psi**	**Additional minimum requirements**
W0	N/A	2500	None
W1	0.5	4000	None
W2	0.50	4000	None

*The maximum w/cm limits do not apply to lightweight concrete.

b. Submit documentation verifying compliance with specified requirements.

2.5.3 Trial Mixtures

Trial mixtures must be in accordance to ACI 301.

2.5.4 Ready-Mix Concrete

Provide concrete that meets the requirements of ASTM C94/C94M.

Ready-mixed concrete manufacturer must provide duplicate delivery tickets with each load of concrete delivered. Provide delivery tickets with the following information in addition to that required by ASTM C94/C94M:

a. Type and brand cement

b. Cement and supplementary cementitious materials content in 94-pound bags per cubic yard of concrete

c. Maximum size of aggregate

d. Amount and brand name of admixtures

e. Total water content expressed by water cementitious material ratio

2.6 REINFORCEMENT

Shop Fabricate reinforcing bars to conform to shapes and dimensions indicated for reinforcement, and as follows:

a. Bend reinforcement cold. Reinforcement must be bent cold to shapes as indicated. Bending must be done in the shop. Rebending of a reinforcing bar that has been bent incorrectly is not permitted. Bending must be in accordance with the standard approved practice and by approved machine methods. Provide hooks and bends that are in accordance with the Contract Documents. Fabricate reinforcement in accordance with fabricating tolerances of ACI 117.

b. Submit manufacturer's certified test report for reinforcement.

c. Submit placing drawings showing fabrication dimensions and placement locations of reinforcement and reinforcement supports. Placing drawings must indicate locations of splices, lengths of lap splices, and details of mechanical and welded splices.

d. Submit request with locations and details of splices not indicated in Contract Documents.

e. Submit request to place column dowels without using templates.

f. Submit request and procedure to field-bend or straighten reinforcing bars partially embedded in concrete at locations not indicated in Contract Documents.

g. Submit request for field cutting, including location and type of bar to be cut and reason field cutting is required.

2.6.1 Reinforcing Bars

a. Reinforcing bars must be deformed, except spirals, load-transfer dowels, and welded wire reinforcement, which may be plain.

b. ASTM A615/A615M with the bars marked S, Grade 60; or ASTM A996/A996M with the bars marked R, Grade 60, or marked A, Grade 60.

c. Submit mill certificates for reinforcing bars.

2.6.1.1 Bar Mats

a. Bar mats must conform to ASTM A184/A184M.

2.6.2 Reinforcing Bar Supports

a. Provide reinforcement support types within structure as required by Contract Documents. Reinforcement supports must conform to CRSI RB4.1. Submit description of reinforcement supports and materials for fastening coated reinforcement if not in conformance with CRSI RB4.1.

c. Legs of supports in contact with formwork must be hot-dip galvanized, or plastic coated after fabrication, or stainless-steel bar supports.

d. Plastic and steel may contain post-consumer or post-industrial recycled content.

2.6.3 Welding

a. Provide weldable reinforcing bars that conform to ASTM A706/A706M and ASTM A615/A615M and Supplement S1, Grade 60, except that the maximum carbon content must be 0.55 percent.

b. Comply with AWS D1.4/D1.4M unless otherwise specified. Do not tack weld reinforcing bars.

c. Welded assemblies of steel reinforcement produced under factory conditions, such as welded wire reinforcement, bar mats, and deformed bar anchors, are allowed.

PART 3 EXECUTION

3.1 EXAMINATION

a. Do not begin installation until substrates have been properly constructed; verify that substrates are level.

b. If substrate preparation is the responsibility of another installer, notify Contracting Officer of unsatisfactory preparation before processing.

c. Check field dimensions before beginning installation. If dimensions vary too much from design dimensions for proper installation, notify Contracting Officer and wait for instructions before beginning installation.

3.2 PREPARATION

Determine quantity of concrete needed and minimize the production of excess concrete. Designate locations or uses for potential excess concrete before the concrete is poured.

3.2.1 General

a. Surfaces against which concrete is to be placed must be free of debris, loose material, standing water, snow, ice, and other deleterious substances before start of concrete placing.

b. Remove standing water without washing over freshly deposited concrete. Divert flow of water through side drains provided for such purpose.

3.2.2 Subgrade Under Foundations and Footings

a. When subgrade material is semi-porous and dry, sprinkle subgrade surface with water as required to eliminate suction at the time concrete is deposited, or seal subgrade surface by covering surface with specified vapor retarder.

b. When subgrade material is porous, seal subgrade surface by covering surface with specified vapor retarder.

3.2.3 Subgrade Under Slabs on Ground

a. Before construction of slabs on ground, have underground work on pipes and conduits completed and approved.

b. Previously constructed subgrade or fill must be cleaned of foreign materials

c. Finish surface of capillary water barrier under interior slabs on ground must not show deviation in excess of 1/4 inch when tested with a 10-foot straightedge parallel with and at right angles to building lines.

d. Finished surface of subgrade or fill under exterior slabs on ground must not be more than 0.02-foot above or 0.10-foot below elevation indicated.

3.2.4 Edge Forms and Screed Strips for Slabs

a. Set edge forms or bulkheads and intermediate screed strips for slabs to obtain indicated elevations and contours in finished slab surface and must be strong enough to support vibrating bridge screeds or roller pipe screeds if nature of specified slab finish requires use of such equipment.

b. Align concrete surface to elevation of screed strips by use of strike-off templates or approved compacting-type screeds.

3.2.5 Reinforcement and Other Embedded Items

a. Secure reinforcement, joint materials, and other embedded materials in position, inspected, and approved before start of concrete placing.

b. When concrete is placed, reinforcement must be free of materials deleterious to bond. Reinforcement with rust, mill scale, or a combination of both will be considered satisfactory, provided minimum nominal dimensions, nominal weight, and minimum average height of deformations of a hand-wire-brushed test specimen are not less than applicable ASTM specification requirements.

3.3 FORMS

a. Provide forms, shoring, and scaffolding for concrete placement. Set forms mortar-tight and true to line and grade.

b. Chamfer above grade exposed joints, edges, and external corners of concrete 0.75 inch. Place chamfer strips in corners of formwork to produce beveled edges on permanently exposed surfaces.

c. Provide formwork with clean-out openings to permit inspection and removal of debris.

d. Inspect formwork and remove foreign material before concrete is placed.

e. At construction joints, lap form-facing materials over the concrete of previous placement. Ensure formwork is placed against hardened concrete so offsets at construction joints conform to specified tolerances.

f. Provide positive means of adjustment (such as wedges or jacks) of shores and struts. Do not make adjustments in formwork after concrete has reached initial setting. Brace formwork to resist lateral deflection and lateral instability.

g. Fasten form wedges in place after final adjustment of forms and before concrete placement.

h. Provide anchoring and bracing to control upward and lateral movement of formwork system.

i. Construct formwork for openings to facilitate removal and to produce opening dimensions as specified and within tolerances.

j. Provide runways for moving equipment. Support runways directly on formwork or structural members. Do not support runways on reinforcement. Loading applied by runways must not exceed capacity of formwork or structural members.

k. Position and support expansion joint materials, waterstops, and other embedded items to prevent displacement. Fill voids in sleeves, inserts, and anchor slots temporarily with removable material to prevent concrete entry into voids.

l. Clean surfaces of formwork and embedded materials of mortar, grout, and foreign materials before concrete placement.

3.3.1 Coating

a. Cover formwork surfaces with an acceptable material that inhibits bond with concrete.

b. If formwork release agent is used, apply to formwork surfaces in accordance with manufacturer's recommendations before placing reinforcement. Remove excess release agent on formwork prior to concrete placement.

c. Do not allow formwork release agent to contact reinforcement or hardened concrete against which fresh concrete is to be placed.

3.3.2 Reshoring

a. Do not allow structural members to be loaded with combined dead and construction loads in excess of loads indicated in the accepted procedure.

b. Install and remove reshores or backshores in accordance with accepted procedure.

c. For floors supporting shores under newly placed concrete, either leave original supporting shores in place, or install reshores or backshores. Shoring system and supporting slabs must resist anticipated loads. Locate reshores and backshores directly under a shore position or as indicated on formwork shop drawings.

d. In multistory buildings, place reshoring or backshoring over a sufficient number of stories to distribute weight of newly placed concrete, forms, and construction live loads.

3.3.3 Reuse

a. Reuse forms providing the structural integrity of concrete and the aesthetics of exposed concrete are not compromised.

b. Wood forms must not be clogged with paste and must be capable of absorbing high water-cementitious material ratio paste.

c. Remove leaked mortar from formwork joints before reuse.

3.3.4 Forms for Standard Rough Form Finish

Provide formwork in accordance with ACI 301 Section 5 with a surface finish, SF-1.0, for formed surfaces that are to be concealed by other construction.

3.3.5 Forms for Standard Smooth Form Finish

Provide formwork in accordance with ACI 301 Section 5 with a surface finish, SF-3.0, for formed surfaces that are exposed to view.

3.3.6 Form Ties

a. For post-tensioned structures, do not remove formwork supports until stressing records have been accepted by the Contracting Officer.

b. After ends or end fasteners of form ties have been removed, repair tie holes in accordance with ACI 301 Section 5 requirements.

3.3.7 Tolerances for Form Construction

a. Construct formwork so concrete surfaces conform to tolerances in ACI 117.

b. Position and secure sleeves, inserts, anchors, and other embedded items such that embedded items are positioned within ACI 117 tolerances.

c. To maintain specified elevation and thickness within tolerances, install formwork to compensate for deflection and anticipated

settlement in formwork during concrete placement. Set formwork and intermediate screed strips for slabs to produce designated elevation, camber, and contour of finished surface before formwork removal. If specified finish requires use of vibrating screeds or roller pipe screeds, ensure that edge forms and screed strips are strong enough to support such equipment.

3.3.8 Removal of Forms and Supports

a. If vertical formed surfaces require finishing, remove forms as soon as removal operations will not damage concrete.

b. Remove top forms on sloping surfaces of concrete as soon as removal will not allow concrete to sag. Perform repairs and finishing operations required. If forms are removed before end of specified curing period, provide curing and protection.

c. Do not damage concrete during removal of vertical formwork for columns, walls, and sides of beams. Perform needed repair and finishing operations required on vertical surfaces. If forms are removed before end of specified curing period, provide curing and protection.

d. Leave formwork and shoring in place to support construction loads and weight of concrete in beams, slabs, and other structural members until in-place required strength of concrete is reached.

e. Form-facing material and horizontal facing support members may be removed before in-place concrete reaches specified compressive strength if shores and other supports are designed to allow facing removal without deflection of supported slab or member.

3.3.9 Strength of Concrete Required for Removal of Formwork

If removal of formwork, reshoring, or backshoring is based on concrete reaching a specified in-place strength, mold and field-cure cylinders in accordance with ASTM C31/C31M. Test cylinders in accordance with ASTM C39/C39M. Alternatively, use one or more of the methods listed herein to evaluate in-place concrete strength for formwork removal.

a. Tests of cast-in-place cylinders in accordance with ASTM C873/C873M. This option is limited to slabs with concrete depths from 5 to 12 in.

b. Penetration resistance in accordance with ASTM C803/C803M.

c. Pullout strength in accordance with ASTM C900.

d. Maturity method in accordance with ASTM C1074. Submit maturity method data using project materials and concrete mix proportions used on the project to demonstrate the correlation between maturity and compressive strength of laboratory cured test specimens to the Contracting Officer.

3.4 WATERSTOP INSTALLATION AND SPLICES

a. Provide waterstops in construction joints as indicated.

b. Install formwork to accommodate waterstop materials. Locate waterstops in joints where indicated in Contract Documents. Minimize

number of splices in waterstop. Splice waterstops in accordance with manufacturer's written instructions. Install factory-manufactured premolded mitered corners.

c. Install waterstops to form a continuous diaphragm in each joint. Make adequate provisions to support and protect waterstops during progress of work. Protect waterstops protruding from joints from damage.

3.4.1 PVC Waterstop

Make splices by heat sealing the adjacent waterstop edges together using a thermoplastic splicing iron utilizing a non-stick surface specifically designed for waterstop welding. Reform waterstops at splices with a remolding iron with ribs or corrugations to match the pattern of the waterstop. The spliced area, when cooled, must show no signs of separation, holes, or other imperfections when bent by hand in as sharp an angle as possible.

3.4.2 Rubber Waterstop

Rubber waterstops must be spliced using cold bond adhesive as recommended by the manufacturer.

3.4.3 Thermoplastic Elastomeric Rubber Waterstop

Fittings must be shop made using a machine specifically designed to mechanically weld the waterstop. A portable power saw must be used to miter or straight cut the ends to be joined to ensure good alignment and contact between joined surfaces. Maintain continuity of the characteristic features of the cross section of the waterstop (for example ribs, tabular center axis, and protrusions) across the splice.

3.4.4 Hydrophilic Waterstop

Miter cut ends to be joined with sharp knife or shears. The ends must be adhered with adhesive.

3.5 PLACING REINFORCEMENT AND MISCELLANEOUS MATERIALS

a. Unless otherwise specified, placing reinforcement and miscellaneous materials must be in accordance to ACI 301. Provide bars, welded wire reinforcement, wire ties, supports, and other devices necessary to install and secure reinforcement.

b. Reinforcement must not have rust, scale, oil, grease, clay, or foreign substances that would reduce the bond. Rusting of reinforcement is a basis of rejection if the effective cross-sectional area or the nominal weight per unit length has been reduced. Remove loose rust prior to placing steel. Tack welding is prohibited.

c. Nonprestressed cast-in-place concrete members must have concrete cover for reinforcement given in the following table:

Concrete Exposure	Member	Reinforcement	Specified cover, in.
Cast against and permanently in contact with ground	All	All	3
Exposed to weather or in contact with ground	All	No. 6 through No. 18 bars	2
		No. 5 bar, W31 or D31 wire, and smaller	1-1/2
Not exposed to weather or in contact with ground	Slabs, joists, and walls	No. 14 and No. 18 bars	1-1/2
		No. 11 bar and smaller	3/4
	Beams, columns, pedestals, and tension ties	Primary reinforcement, stirrups, ties, spirals, and hoops	1-1/2

3.5.1 General

Provide details of reinforcement that are in accordance with the Contract Documents.

3.5.2 Vapor Retarder and Vapor Barrier

a. Install in accordance with ASTM E1643. Provide beneath the on-grade concrete floor slab. Use the greatest widths and lengths practicable to eliminate joints wherever possible. Lap joints a minimum of 12 inches and tape.

b. Remove torn, punctured, or damaged vapor retarder and vapor barrier material and provide with new vapor retarder and vapor barrier prior to placing concrete. Concrete placement must not damage vapor retarder and vapor barrier material. Place vapor barrier directly on underlying subgrade, base course, or capillary water barrier, unless it consists of crushed material or large granular material which could puncture the vapor barrier. In this case, a thin layer of approximately 1/2 inch of fine graded material should be rolled or compacted over the fill before installation of the vapor barrier to reduce the possibility of puncture. Control concrete placement so as to prevent damage to the vapor barrier.

3.5.3 Reinforcement Supports

Provide reinforcement support in accordance with CRSI RB4.1 and ACI 301 Section 3 requirements. Supports for coated or galvanized bars must also be coated with electrically compatible material for a distance of at least 2 inches beyond the point of contact with the bars.

3.5.4 Splicing

As indicated in the Contract Documents. For splices not indicated follow ACI 301. Do not splice at points of maximum stress. Overlap welded wire reinforcement the spacing of the cross wires, plus 2 inches.

3.5.5 Future Bonding

Plug exposed, threaded, mechanical reinforcement bar connectors with a greased bolt. Provide bolt threads that match the connector. Countersink the connector in the concrete. Caulk the depression after the bolt is installed.

3.5.6 Setting Miscellaneous Material

Place and secure anchors and bolts, pipe sleeves, conduits, and other such items in position before concrete placement and support against displacement. Plumb anchor bolts and check location and elevation. Temporarily fill voids in sleeves with readily removable material to prevent the entry of concrete.

3.5.7 Inspection of Reinforcement

Inspect and verify proper reinforcement grade, shape, cross section and condition. Do not use reinforcement with the following defects:

a. Bar lengths, depths, and bends beyond specified fabrication tolerances.

b. Bends or kinks not indicated on drawings or approved shop drawings.

c. Bars with reduced cross section due to rusting or other cause.

3.5.8 Placing Reinforcement

Place reinforcement in accordance with ACI 301.

For slabs on grade (over earth or over capillary water barrier) and for footing reinforcement, support bars or welded wire reinforcement on precast concrete blocks, spaced at intervals required by size of reinforcement, to keep reinforcement the minimum height specified above the underside of slab or footing.

For slabs other than on grade, supports for which any portion is less than 1 inch from concrete surfaces that are exposed to view or to be painted must be of precast concrete units, plastic-coated steel, or stainless steel protected bar supports. Precast concrete units must be wedge shaped, not larger than 3-1/2 by 3-1/2 inches, and of thickness equal to that indicated for concrete protection of reinforcement. Provide precast units that have cast-in galvanized tie wire hooked for anchorage and blend with concrete surfaces after finishing is completed.

Provide reinforcement that is supported and secured together to prevent

displacement by construction loads or by placing of wet concrete, and as follows:

a. Provide supports for reinforcing bars that are sufficient in number and have sufficient strength to carry the reinforcement they support, and in accordance with ACI 301 and CRSI 10MSP. Do not use supports to support runways for concrete conveying equipment and similar construction loads.

b. Equip supports on ground and similar surfaces with sand-plates.

c. Support welded wire reinforcement as required for reinforcing bars.

d. Secure reinforcements to supports by means of tie wire. Wire must be black, soft iron wire, not less than 16 gage.

e. Reinforcement must be accurately placed, securely tied at intersections, and held in position during placing of concrete by spacers, chairs, or other approved supports. Point wire-tie ends away from the form. Unless otherwise indicated, numbers, type, and spacing of supports must conform to the Contract Documents.

f. Bending of reinforcing bars partially embedded in concrete is permitted only as specified in the Contract Documents.

3.5.9 Spacing of Reinforcing Bars

a. Spacing must be as indicated in the Contract Documents.

b. Reinforcing bars may be relocated to avoid interference with other reinforcement, or with conduit, pipe, or other embedded items. If any reinforcing bar is moved a distance exceeding one bar diameter or specified placing tolerance, resulting rearrangement of reinforcement is subject to preapproval by the Contracting Officer.

3.5.10 Concrete Protection for Reinforcement

Additional concrete protection must be in accordance with the Contract Documents.

3.5.11 Welding

Welding must be in accordance with AWS D1.4/D1.4M.

3.6 BATCHING, MEASURING, MIXING, AND TRANSPORTING CONCRETE

In accordance with ASTM C94/C94M, ACI 301, ACI 302.1R and ACI 304R, except as modified herein. Batching equipment must be such that the concrete ingredients are consistently measured within the following tolerances: 1 percent for cement and water, 2 percent for aggregate, and 3 percent for admixtures. Furnish mandatory batch ticket information for each load of ready mix concrete.

3.6.1 Measuring

Make measurements at intervals as specified in paragraphs SAMPLING and TESTING.

3.6.2 Mixing

a. Mix concrete in accordance with ASTM C94/C94M, ACI 301 and ACI 304R.

b. Machine mix concrete. Begin mixing within 30 minutes after the cement has been added to the aggregates. Place concrete within 90 minutes of either addition of mixing water to cement and aggregates or addition of cement to aggregates. A retarder shall be used to facilitate placing and finishing when concrete temperature is 85 degrees F or greater.

c. If the entrained air content falls below the specified limit, add a sufficient quantity of admixture, within the manufacturer's recommended dosage, to bring the entrained air content within the specified limits. Dissolve admixtures in the mixing water and mix in the drum to uniformly distribute the admixture throughout the batch. Do not reconstitute concrete that has begun to solidify.

3.6.3 Transporting

Transport concrete from the mixer to the forms as rapidly as practicable. Prevent segregation or loss of ingredients. Clean transporting equipment thoroughly before each batch. Do not use aluminum pipe or chutes. Remove concrete which has segregated in transporting and dispose of as directed.

3.7 PLACING CONCRETE

Place concrete in accordance with ACI 301 Section 5. Concrete shall be placed within 15 minutes of discharge into non-agitating equipment.

3.7.1 Pumping

ACI 304R and ACI 304.2R. Pumping must not result in separation or loss of materials nor cause interruptions sufficient to permit loss of plasticity between successive increments. Loss of slump in pumping equipment must not exceed 2 inches at discharge/placement. Do not convey concrete through pipe made of aluminum or aluminum alloy. Avoid rapid changes in pipe sizes. Limit maximum size of course aggregate to 33 percent of the diameter of the pipe. Limit maximum size of well-rounded aggregate to 40 percent of the pipe diameter. Take samples for testing at both the point of delivery to the pump and at the discharge end.

3.7.2 Cold Weather

Cold weather concrete must meet the requirements of ACI 301 unless otherwise specified. Do not allow concrete temperature to decrease below 50 degrees F. Obtain approval prior to placing concrete when the ambient temperature is below 40 degrees F or when concrete is likely to be subjected to freezing temperatures within 24 hours. Cover concrete and provide sufficient heat to maintain 50 degrees F minimum adjacent to both the formwork and the structure while curing. Limit the rate of cooling to 5 degrees F in any one hour and 18 degrees F per 24 hours after heat application.

3.7.3 Hot Weather

Hot weather concrete must meet the requirements of ACI 301 unless otherwise specified. Maintain required concrete temperature using Figure 4.2 in ACI 305R to prevent the evaporation rate from exceeding 0.2 pound

of water per square foot of exposed concrete per hour. Cool ingredients before mixing or use other suitable means to control concrete temperature and prevent rapid drying of newly placed concrete. Shade the fresh concrete as soon as possible after placing. Start curing when the surface of the fresh concrete is sufficiently hard to permit curing without damage. Provide water hoses, pipes, spraying equipment, and water hauling equipment, where job site is remote to water source, to maintain a moist concrete surface throughout the curing period. Provide burlap cover or other suitable, permeable material with fog spray or continuous wetting of the concrete when weather conditions prevent the use of either liquid membrane curing compound or impervious sheets. For vertical surfaces, protect forms from direct sunlight and add water to top of structure once concrete is set.

3.7.4 Bonding

Surfaces of set concrete at joints, must be roughened and cleaned of laitance, coatings, loose particles, and foreign matter. Roughen surfaces in a manner that exposes the aggregate uniformly and does not leave laitance, loosened particles of aggregate, nor damaged concrete at the surface.

Obtain bonding of fresh concrete that has set as follows:

a. At joints between footings and walls or columns, between walls or columns and the beams or slabs they support, and elsewhere unless otherwise specified; roughened and cleaned surface of set concrete must be dampened, but not saturated, immediately prior to placing of fresh concrete.

b. At joints in exposed-to-view work; at vertical joints in walls; at joints near midpoint of span in girders, beams, supported slabs, other structural members; in work designed to contain liquids; the roughened and cleaned surface of set concrete must be dampened but not saturated and covered with a cement grout coating.

c. Provide cement grout that consists of equal parts of portland cement and fine aggregate by weight with not more than 6 gallons of water per sack of cement. Apply cement grout with a stiff broom or brush to a minimum thickness of 1/16 inch. Deposit fresh concrete before cement grout has attained its initial set.

3.8 WASTE MANAGEMENT

Provide as specified in the Waste Management Plan and as follows.

3.8.1 Mixing Equipment

Before concrete pours, designate Contractor-owned site meeting environmental standards for cleaning out concrete mixing trucks. Minimize water used to wash equipment.

3.8.2 Reinforcing Steel

Collect reinforcing steel and place in designated area for recycling.

3.8.3 Other Waste

Identify concrete manufacturer's or supplier's policy for collection or

return of construction waste, unused material, deconstruction waste, and/or packaging material.

3.9 SURFACE FINISHES EXCEPT FLOOR, SLAB, AND PAVEMENT FINISHES

3.9.1 Defects

Repair surface defects in accordance with ACI 301 Section 5.

3.9.2 Formed Surfaces

3.9.2.1 Tolerances

Tolerances in accordance with ACI 117 and as indicated.

3.9.2.2 As-Cast Rough Form

Provide for surfaces not exposed to public view a surface finish SF-1.0. Patch holes and defects in accordance with ACI 301.

3.9.2.3 Standard Smooth Finish

Provide for surfaces exposed to public view a surface finish SF-3.0. Patch holes and defects in accordance with ACI 301.

3.9.3 Smooth-Rubbed Finish

Provide a smooth-rubbed finish per ACI 301 Section 5 in the locations indicated.

3.10 FLOOR, SLAB, AND PAVEMENT FINISHES AND MISCELLANEOUS CONSTRUCTION

In accordance with ACI 301 and ACI 302.1R, unless otherwise specified. Slope floors uniformly to drains where drains are provided. Where straightedge measurements are specified, Contractor must provide straightedge.

3.10.1 Finish

Place, consolidate, and immediately strike off concrete to obtain proper contour, grade, and elevation before bleedwater appears. Permit concrete to attain a set sufficient for floating and supporting the weight of the finisher and equipment. If bleedwater is present prior to floating the surface, drag the excess water off or remove by absorption with porous materials. Do not use dry cement to absorb bleedwater. Grate tampers ("jitterbugs") shall not be used.

3.10.1.1 Scratched

Use for surfaces intended to receive bonded applied cementitious applications. Finish concrete in accordance with ACI 301 Section 5 for a scratched finish.

3.10.1.2 Nonslip Finish

Use on surfaces of exterior platforms, steps, and landings; and on exterior and interior pedestrian ramps. Finish concrete in accordance with ACI 301 Section 5 for a dry-shake finish. After the selected material has been embedded by the two floatings, complete the operation

with a broomed finish.

3.10.1.3 Broomed

Use on surfaces of exterior walks, platforms, patios, and ramps, unless otherwise indicated. Finish concrete in accordance with ACI 301 Section 5 for a broomed finish.

3.10.2 Flat Floor Finishes

ACI 302.1R. Construct in accordance with one of the methods recommended in Table 10.15.3a, "Slab-on-ground flatness/levelness construction guide" or Table 10.15.3b, "Suspended slab flatness/levelness construction guide" appropriate for the type of construction. ACI 117 for tolerance tested by ASTM E1155.

a. Specified Conventional Value:

Floor Flatness (Ff) 20 minimum

Floor Levelness (FL) 15 minimum

3.10.2.1 Remedies for Out of Tolerance Work

Contractor is required to repair and retest any floors not meeting specified tolerances. Prior to repair, Contractor must submit and receive approval for the proposed repair, including product data from any materials proposed. Repairs must not result in damage to structural integrity of the floor. For floors exposed to public view, repairs must prevent any uneven or unusual coloring of the surface.

3.11 JOINTS

3.11.1 Construction Joints

Make and locate joints not indicated so as not to impair strength and appearance of the structure, as approved. Joints must be perpendicular to main reinforcement. Reinforcement must be continued and developed across construction joints. Locate construction joints as follows:

3.11.1.1 Construction Joints for Constructability Purposes

a. In walls, at top of footing; at top of slabs on ground; at top and bottom of door and window openings or where required to conform to architectural details; and at underside of deepest beam or girder framing into wall.

b. In columns or piers, at top of footing; at top of slabs on ground; and at underside of deepest beam or girder framing into column or pier.

c. Near midpoint of spans for supported slabs, beams, and girders unless a beam intersects a girder at the center, in which case construction joints in girder must offset a distance equal to twice the width of the beam. Make transfer of shear through construction joint by use of inclined reinforcement.

Provide keyways at least 1-1/2-inches deep in construction joints in walls and slabs and between walls and footings; approved bulkheads may be used

for slabs.

3.12 CURING AND PROTECTION

Curing and protection in accordance with ACI 301 Section 5, unless otherwise specified. Begin curing immediately following form removal. Avoid damage to concrete from vibration created by blasting, pile driving, movement of equipment in the vicinity, disturbance of formwork or protruding reinforcement, and any other activity resulting in ground vibrations. Protect concrete from injurious action by sun, rain, flowing water, frost, mechanical injury, tire marks, and oil stains. Do not allow concrete to dry out from time of placement until the expiration of the specified curing period. Do not use membrane-forming compound on surfaces where appearance would be objectionable, on any surface to be painted, where coverings are to be bonded to the concrete, or on concrete to which other concrete is to be bonded. If forms are removed prior to the expiration of the curing period, provide another curing procedure specified herein for the remaining portion of the curing period. Provide moist curing for those areas receiving liquid chemical sealer, hardener, or epoxy coating. Allow curing compound/sealer installations to cure prior to the installation of materials that adsorb VOCs.

3.12.1 Curing Periods

ACI 301 Section 5, except 10 days for retaining walls, pavement or chimneys. Begin curing immediately after placement. Protect concrete from premature drying, excessively hot temperatures, and mechanical injury; and maintain minimal moisture loss at a relatively constant temperature for the period necessary for hydration of the cement and hardening of the concrete. The materials and methods of curing are subject to approval by the Contracting Officer.

3.12.2 Curing Formed Surfaces

Accomplish curing of formed surfaces, including undersurfaces of girders, beams, supported slabs, and other similar surfaces by moist curing with forms in place for full curing period or until forms are removed. If forms are removed before end of curing period, accomplish final curing of formed surfaces by any of the curing methods specified above, as applicable.

3.12.3 Curing Unformed Surfaces

a. Accomplish initial curing of unformed surfaces, such as monolithic slabs, floor topping, and other flat surfaces, by membrane curing.

b. Accomplish final curing of unformed surfaces by any of curing methods specified, as applicable.

3.12.4 Temperature of Concrete During Curing

When temperature of atmosphere is 41 degrees F and below, maintain temperature of concrete at not less than 55 degrees F throughout concrete curing period or 45 degrees F when the curing period is measured by maturity. When necessary, make arrangements before start of concrete placing for heating, covering, insulation, or housing as required to maintain specified temperature and moisture conditions for concrete during curing period.

When the temperature of atmosphere is 80 degrees F and above or during other climatic conditions which cause too rapid drying of concrete, make arrangements before start of concrete placing for installation of wind breaks, of shading, and for fog spraying, wet sprinkling, or moisture-retaining covering of light color as required to protect concrete during curing period.

Changes in temperature of concrete must be uniform and not exceed 5 degrees F in any one hour nor 49 degrees F in any 24-hour period.

3.12.5 Protection from Mechanical Injury

During curing period, protect concrete from damaging mechanical disturbances, particularly load stresses, heavy shock, and excessive vibration and from damage caused by rain or running water.

3.12.6 Protection After Curing

Protect finished concrete surfaces from damage by construction operations.

3.13 FIELD QUALITY CONTROL

3.13.1 Aggregate Testing

3.13.1.1 Fine Aggregate

At least once during each shift when the concrete plant is operating, there shall be one sieve analysis and fineness modulus determination in accordance with ASTM C136/C136M and COE CRD-C 104 for the fine aggregate or for each fine aggregate if it is batched in more than one size or classification. The location at which samples are taken may be selected by the Contractor as the most advantageous for control. However, the Contractor is responsible for delivering fine aggregate to the mixer within specification limits. When the amount passing on any sieve is outside the specification limits, the fine aggregate shall be immediately resampled and retested. If there is another failure on any sieve, the fact shall be immediately reported to the Contracting Officer, concreting shall be stopped, and immediate steps taken to correct the grading.

3.13.1.2 Coarse Aggregate

At least once during each shift in which the concrete plant is operating, there shall be a sieve analysis in accordance with ASTM C136/C136M for each size of coarse aggregate. The location at which samples are taken may be selected by the Contractor as the most advantageous for production control. However, the Contractor shall be responsible for delivering the aggregate to the mixer within specification limits. A test record of samples of aggregate taken at the same locations shall show the results of the current test as well as the average results of the five most recent tests including the current test. The Contractor may adopt limits for control coarser than the specification limits for samples taken other than as delivered to the mixer to allow for degradation during handling. When the amount passing any sieve is outside the specification limits, the coarse aggregate shall be immediately resampled and retested. If the second sample fails on any sieve, that fact shall be reported to the Contracting Officer. Where two consecutive averages of 5 tests are outside specification limits, the operation shall be considered out of control and reported to the Contracting Officer. Concreting shall be stopped and immediate steps shall be taken to correct the grading.

3.13.2 Concrete Sampling

ASTM C172/C172M. Collect samples of fresh concrete to perform tests specified. ASTM C31/C31M for making test specimens.

3.13.3 Concrete Testing

3.13.3.1 Slump Tests

ASTM C143/C143M. Take concrete samples during concrete placement/discharge. The maximum slump may be increased as specified with the addition of an approved admixture provided that the water-cementitious material ratio is not exceeded. Perform tests at commencement of concrete placement, when test cylinders are made.

3.13.3.2 Temperature Tests

Test the concrete delivered and the concrete in the forms. Perform tests in hot or cold weather conditions (below 50 degrees F and above 80 degrees F) for each batch (minimum) or every 20 cubic yards (maximum) of concrete, until the specified temperature is obtained, and whenever test cylinders and slump tests are made.

3.13.3.3 Compressive Strength Tests

ASTM C39/C39M. Make six 6 inch by 12 inch test cylinders for each set of tests in accordance with ASTM C31/C31M, ASTM C172/C172M and applicable requirements of ACI 305R and ACI 306R. Take precautions to prevent evaporation and loss of water from the specimen. Test two 6 inch by 12 inchcylinders at 7 days, two 6 inch by 12 inch cylinders at 28 days, and hold two 6 inch by 12 inch cylinders in reserve. Concrete compressive tests must meet the requirements of this section, the Contract Document, and ACI 301.

3.13.3.4 Air Content

ASTM C173/C173M or ASTM C231/C231M for normal weight concrete. Test air-entrained concrete for air content at the same frequency as specified for slump tests.

3.13.3.5 Strength of Concrete Structure

The strength of the concrete structure will be considered to be deficient if any of the following conditions are identified:

a. Failure to meet compressive strength tests as evaluated.

b. Reinforcement not conforming to requirements specified.

c. Concrete which differs from required dimensions or location in such a manner as to reduce strength.

d. Concrete curing and protection of concrete against extremes of temperature during curing, not conforming to requirements specified.

e. Concrete subjected to damaging mechanical disturbances, particularly load stresses, heavy shock, and excessive vibration.

f. Poor workmanship likely to result in deficient strength.

Where the strength of the concrete structure is considered deficient submit a mitigation or remediation plan for review and approval by the contracting officer.

3.13.3.6 Non-Conforming Materials

Factors that indicate that there are non-conforming materials include (but not limited to) excessive compressive strength, inadequate compressive strength, excessive slump, excessive voids and honeycombing, concrete delivery records that indicate excessive time between mixing and placement, or excessive water was added to the mixture during delivery and placement. Any of these indicators alone are sufficient reason for the Contracting Officer to request additional sampling and testing.

Investigations into non-conforming materials must be conducted at the Contractor's expense. The Contractor must be responsible for the investigation and must make written recommendations to adequately mitigate or remediate the non-conforming material. The Contracting Officer may accept, accept with reduced payment, require mitigation, or require removal and replacement of non-conforming material at no additional cost to the Government.

3.13.3.7 Testing Concrete Structure for Strength

When there is evidence that strength of concrete structure in place does not meet specification requirements or there are non-conforming materials, make cores drilled from hardened concrete for compressive strength determination in accordance with ASTM C42/C42M, and as follows:

a. Take at least three representative cores from each member or area of concrete-in-place that is considered potentially deficient. Location of cores will be determined by the Contracting Officer.

b. Test cores after moisture conditioning in accordance with ASTM C42/C42M if concrete they represent is more than superficially wet under service.

c. Air dry cores, (60 to 80 degrees F with relative humidity less than 60 percent) for 7 days before test and test dry if concrete they represent is dry under service conditions.

d. Strength of cores from each member or area are considered satisfactory if their average compressive strength is equal to or greater than 85 percent of the design compressive strength, and if no single core strength is less than 75 percent of the design compressive strength. Additional testing of cores extracted from locations represented by erratic core strength results will be permitted only when approved by the Contracting Officer.

Fill core holes solid with patching mortar and finished to match adjacent concrete surfaces.

Correct concrete work that is found inadequate by core tests in a manner approved by the Contracting Officer.

3.14 REPAIR, REHABILITATION AND REMOVAL

Before the Contracting Officer accepts the structure the Contractor must inspect the structure for cracks, damage and substandard concrete placements that may adversely affect the service life of the structure. A report documenting these defects must be prepared which includes recommendations for repair, removal or remediation must be submitted to the Contracting Officer for approval before any corrective work is accomplished.

3.14.1 Crack Repair

Prior to final acceptance, all cracks in excess of 0.02 inches wide must be documented and repaired. The proposed method and materials to repair the cracks must be submitted to the Contracting Officer for approval. The proposal must address the amount of movement expected in the crack due to temperature changes and loading.

3.14.2 Repair of Weak Surfaces

Weak surfaces are defined as mortar-rich, rain-damaged, uncured, or containing exposed voids or deleterious materials. Concrete surfaces with weak surfaces less than 1/4 inch thick must be diamond ground to remove the weak surface. Surfaces containing weak surfaces greater than 1/4 inch thick must be removed and replaced or mitigated in a manner acceptable to the Contracting Officer.

3.14.3 Failure of Quality Assurance Test Results

Proposed mitigation efforts by the Contractor must be approved by the Contracting Officer prior to proceeding.

-- End of Section --

THIS PAGE INTENTIONALLY LEFT BLANK

SECTION 26 05 13

MEDIUM-VOLTAGE CABLES
08/25

PART 1 GENERAL

Provide the project name, contract name, and a brief description of the work covered. Provide references to the Basic or General electrical section and any other technical sections that might or should reference this section. 33 71 02 UNDERGROUND ELECTRICAL DISTRIBUTION applies to work specified in this section.

1.1 DEFINITIONS

Medium-voltage power cables include all cables rated above 2,000 volts up to 35,000 volts.

1.2 REFERENCES

The publications listed below form a part of this specification to the extent referenced. The publications are referred to within the text by the basic designation only.

ASTM INTERNATIONAL (ASTM)

ASTM B3	(2013; R 2024) Standard Specification for Soft or Annealed Copper Wire
ASTM B8	(2023) Standard Specification for Concentric-Lay-Stranded Copper Conductors, Hard, Medium-Hard, or Soft
ASTM B33	(2010; R 2020) Standard Specification for Tinned Soft or Annealed Copper Wire for Electrical Purposes
ASTM D746	(2024) Standard Test Method for Brittleness Temperature of Plastics and Elastomers by Impact

INSTITUTE OF ELECTRICAL AND ELECTRONICS ENGINEERS (IEEE)

IEEE 48	(2020) Test Procedures and Requirements for Alternating-Current Cable Terminations Used on Shielded Cables Having Laminated Insulation Rated 2.5 kV through 765 kV or Extruded Insulation Rated 2.5 kV through 500 kV
IEEE 386	(2016) Separable Insulated Connector Systems for Power Distribution Systems Rated 2.5 kV through 35 kV
IEEE 400	(2023) Guide for Field Testing and Evaluation of the Insulation of Shielded Power Cable Systems Rated 5 kV and Above

IEEE 400.2	(2024) Guide for Field Testing of Shielded Power Cable Systems Using Very Low Frequency (VLF)
IEEE 404	(2012) Standard for Extruded and Laminated Dielectric Shielded Cable Joints Rated 2500 V to 500,000 V
IEEE 1202	(2006; R 2012; CORR 1 2012) Flame-Propagation Testing of Wire and Cable
IEEE C2	(2023) National Electrical Safety Code

INSULATED CABLE ENGINEERS ASSOCIATION (ICEA)

ICEA T-29-520	(1986) Conducting Vertical Cable Tray Flame Tests with Theoretical Heat Input Rate of 210,000 B.T.U./Hour

INTERNATIONAL ELECTRICAL TESTING ASSOCIATION (NETA)

NETA ATS	(2025) Standard for Acceptance Testing Specifications for Electrical Power Equipment and Systems

NATIONAL ELECTRICAL MANUFACTURERS ASSOCIATION (NEMA)

ANSI C119.1	(2023) Electric Connectors - Sealed Insulated Underground Connector Systems Rated 600 Volts
ANSI/NEMA WC 71/ICEA S-96-659	(2014; R 2022) Standard for Nonshielded Cables Rated 2001-5000 Volts for use in the Distribution of Electric Energy
NEMA WC 74/ICEA S-93-639	(2022) 5-46 kV Shielded Power Cable for Use in the Transmission and Distribution of Electric Energy

NATIONAL FIRE PROTECTION ASSOCIATION (NFPA)

NFPA 70	(2026; TIA 26-1; ERTA 26-1; TIA 26-2; TIA 26-3; TIA 26-4; TIA 26-5; TIA 26-6; TIA 26-7; ERTA 26-2; ERTA 26-3) National Electrical Code
NFPA 70E	(2024) Standard for Electrical Safety in the Workplace

UL SOLUTIONS (UL)

UL 1581	(2019; Reprint Nov 2023) UL Standard for Safety Reference Standard for Electrical Wires, Cables, and Flexible Cords
UL 1685	(2015) UL Standard for Safety Vertical-Tray Fire-Propagation and Smoke-Release Test for Electrical and Optical-Fiber Cables

1.3 SUBMITTALS

Government approval is required for submittals with a "G" or "S" classification. Submittals not having a "G" or "S" classification are for Contractor Quality Control approval. Submit the following in accordance with Section 01 33 00 SUBMITTAL PROCEDURES:

SD-01 Preconstruction Submittals

List of Splices and Terminations to be Installed by Splicer/Terminator; G

SD-02 Shop Drawings

Pulling Plan; G

SD-03 Product Data

Single-Conductor Shielded Cables; G

Ground Conductors; G

Cable Supports and Fittings; G

Cable Tags; G

Fireproof Tape; G

Splices; G

Terminations; G

Cable Identification; G,

SD-05 Design Data

Submit within 90 calendar days of Notice to Proceed.

Cable Pulling Calculations; G,

SD-06 Test Reports

Factory Inspection and Tests; G,

Field Acceptance Testing; G

Wire And Cable Test Record Form; G

Phase Rotation Test Record Form; G

SD-07 Certificates

Splicer/Terminator Certifications; G

SD-08 Manufacturer's Instructions

Terminations; G

Splices; G

1.4 ADMINISTRATIVE REQUIREMENTS

1.4.1 Pre-Installation Meetings

No later than 30 days after Notice to Proceed, coordinate with the Contracting Officer to schedule a pre-installation meeting. Submit the following for review and approval prior to the meeting:

a. Pulling Plan. Do not perform any pull until Government reviews and approves the pulling plan, pulling calculations, and cable factory test certificates.

b. Splicer/Terminator Certifications

c. List of Splices and Terminations to be Installed by Splicer/Terminator

d. Manufacturer's catalog data for all cables, cable supports and fittings, cable tags, fireproof tape, splice kits, terminations, and any other product data required to complete the work.

1.5 QUALITY CONTROL

1.5.1 Regulatory Requirements

In each of the publications referred to herein, consider the advisory provisions to be mandatory. Interpret references in these publications to the "authority having jurisdiction," or words of similar meaning, to mean the Contracting Officer. Ensure equipment, materials, installation, and workmanship are in accordance with the mandatory and advisory provisions of NFPA 70, IEEE C2 unless more stringent requirements are specified or indicated.

1.5.2 Standard Products

Provide materials and equipment that are products of manufacturers regularly engaged in the production of such products which are of equal material, design and workmanship. Provide products which have been in satisfactory commercial or industrial use for 2 years prior to bid opening. Ensure the 2-year period includes applications of equipment and materials under similar circumstances and of similar size. Ensure the product has been on sale on the commercial market through advertisements, manufacturers' catalogs, or brochures during the 2-year period. Where two or more items of the same class of equipment are required, these items must be products of a single manufacturer.

1.5.3 Qualifications

Verify personnel performing Medium Voltage (MV) splicing or terminations have 5 years minimum experience in cable splicing and terminations of the type used in this project. Submit splicer/terminator certifications issued by the cable splice and termination manufacturer who has examined and tested a test splice or termination of each type required by this contract for each cable splicer. Ensure the certification identifies which splices and terminations it applies to.
Once a splice or termination has been started by a splicer, ensure the same splicer completes that particular splice, and that each termination and splice is started and completed in one continuous work period.

Maintain and submit a list of splices and terminations to be installed by splicer/terminator. Ensure the list includes the following for each splice or termination completed.

a. Name of splicer/terminator.

b. Date splice or termination was performed.

c. Location of splice or termination. For terminations at equipment indicate equipment number as required to completely define the location.

d. Feeder number, as applicable.

1.6 FACTORY INSPECTION AND TESTS

1.6.1 General

Perform factory inspection and tests of wire and cable by and at the plant of the manufacturer. Ensure testing complies with Section 7 of ANSI/NEMA WC 71/ICEA S-96-659 and Section 9 of NEMA WC 74/ICEA S-93-639 as applicable. Include specific tests required for particular materials, components, and completed cables as specified in the sections of the above standards applicable to those materials, components, and cable types. Also perform tests in accordance with the additional requirements specified below. In addition to the manufacturer's routine sample testing, for each reel perform an insulation resistance test, and a shield continuity test as applicable. Do not ship cable until after the manufacturer's test reports have been submitted and approved.

1.6.2 Flame Tests

Provide multiple-conductor and single-conductor cable assemblies for cable trays and risers that have passed IEEE 1202 (FT4), UL 1685, or ICEA T-29-520 flame tests. For all other single-conductor cables and individual conductors of multiple-conductor cables, provide cables that have at least passed UL 1581 (VW-1 or FT1) flame tests. If such tests have previously been performed on identical cables of the same design and is indicated in the product data, these tests need not be repeated.

1.7 DELIVERY, STORAGE, AND HANDLING

a. Ship cables on reels in a way that protects the cable from mechanical injury. Hermetically seal end of each cable length using heat-shrinkable molded cable end caps to exclude moisture and securely attached to the reel.

b. Store cables on reels with the axis hole parallel to the horizontal plane. Cables on reels stored laying flat on the side of the reel will not be accepted. Roll reels in the direction indicated by the manufacturer.

c. Make the minimum reel drum diameter a minimum of 14 times the overall diameter of the cable. Ensure that each cable length is installed with a pulling eye installed by the manufacturer, for installation in ducts, manholes, and utility tunnels.

d. Unreel or uncoil cables slowly to prevent damage to the sheath by

sudden bending. Stop unreeling or uncoiling if kinks appear and do not proceed until kinks have been removed. Kinked cable will be rejected. Improperly handled cable may be rejected.

PART 2 PRODUCTS

2.1 MEDIUM-VOLTAGE CABLE

2.1.1 Wire and Cable Schedule

Provide cable as indicated on the drawings. Estimated quantities are approximate for bidding purposes and must be verified by the Contractor.

2.1.2 Governing Standards

Provide materials, construction, and tests, unless otherwise specified, conforming to the applicable requirements of ANSI/NEMA WC 71/ICEA S-96-659 and NEMA WC 74/ICEA S-93-639 as applicable, for the following:

a. Single-Conductor Shielded Cables

2.2 MATERIALS

2.2.1 Submittal Requirements

Submit catalog data sufficient to demonstrate compliance with the specifications requirements for all cable types provided.

2.2.2 Rated Circuit Voltages

Provide cables with minimum rated circuit voltages in accordance with ANSI/NEMA WC 71/ICEA S-96-659, and NEMA WC 74/ICEA S-93-639 as applicable.

2.2.3 Conductors

2.2.3.1 Material for Conductors

Provide conductors that in accordance with Section 2 of ANSI/NEMA WC 71/ICEA S-96-659, and NEMA WC 74/ICEA S-93-639, annealed copper conforming to ASTM B3 or ASTM B8 unless specified otherwise. Copper conductors must be bare, or tin- or lead-alloy-coated, if required by the type of insulation used. Tin-coated copper conductors must conform to ASTM B33.

2.2.3.2 Conductor Size

Minimum wire sizes are No. 6 AWG for 5kV cable and and No. 2 AWG for 15kV cable.

2.2.3.3 Stranding

Provide class B stranding as defined in Table G-2 of ANSI/NEMA WC 71/ICEA S-96-659, and Table H-2 of NEMA WC 74/ICEA S-93-639, as applicable.

2.2.4 Insulation

2.2.4.1 Insulation Material

Except as otherwise specified, provide ethylene-propylene rubber (EPR) type insulation meeting the requirements of Section 4 of ANSI/NEMA WC 71/ICEA S-96-659 and NEMA WC 74/ICEA S-93-639 as applicable. Polyvinyl Chloride (PVC) insulation will not be accepted.

2.2.4.2 Insulation Thickness

Provide minimum insulation thickness for each conductor based on its rated voltage and insulation material for 133 percent insulation levels. For both single-conductor cables and individual conductors of multiconductor cables, provide insulation thickness per Table 4-2 of ANSI/NEMA WC 71/ICEA S-96-659 and per Table 4-4 of NEMA WC 74/ICEA S-93-639 as applicable. Thicknesses shown below are nominal, ranging from -5 mils below nominal to +30 mils above nominal. Acceptable nominal thicknesses are:

Voltage Rating (kV)	Insulation Level (percent)	Typical Insulation Thickness	
		mm	mils
2.4	100	Depends on conductor size, see Table 4-2, NEMA WC 71	
	133	Depends on conductor size, see Table 4-2, NEMA WC 71	
5	100	2.29	90
	133	2.92	115
	173	3.56	140
8	100	2.92	115
	133	3.56	140
	173	4.45	175
15	100	4.45	175
	133	5.59	220
	173	6.6	260
25	100	6.6	260
	133	8.13	320
	173	10.67	420

Voltage Rating (kV)	Insulation Level (percent)	Typical Insulation Thickness	
		mm	mils
35	100	8.76	345
	133	10.67	420
	173	14.73	580

2.2.4.3 Insulation Shielding

Provide shielding that complies with Sections 5 and 6 of NEMA WC 74/ICEA S-93-639 for all cables rated 5kV and higher.

2.2.5 Jackets

Provide jackets meeting the requirements of Section 5.1 of ANSI/NEMA WC 71/ICEA S-96-659 and Section 7.1 of NEMA WC 74/ICEA S-93-639 as applicable for all cables. Individual conductors of multiple-conductor cables are required to have jackets only if they are necessary for the conductor to meet other specifications herein. For single-conductor cables and individual conductors of multiple-conductor cables, except for shielded cables, provide jackets in direct contact and adhered or vulcanized to the conductor insulation. For multiple-conductor cables and shielded single-conductor cables, provide a common overall jacket, tightly and concentrically formed around the core. Repaired jacket defects found and corrected during manufacturing are permitted if the cable, including jacket, afterward fully meets these specifications and the requirements of the applicable standards.

2.2.5.1 Jacket Material

Provide jackets of one of the materials listed below, in accordance with Section 5 of ANSI/NEMA WC 71/ICEA S-96-659 and Section 7 of NEMA WC 74/ICEA S-93-639 as applicable. Polyvinyl chloride compounds will not be permitted.

a. Black neoprene (CR).

b. Chlorosulfonated polyethylene (CSPE)

c. Chlorinated polyethylene (CPE)

d. Low smoke zero halogen (LSZH)

e. Crosslinked polyolefin (XLPO)

f. Medium-density polyethylene (MDPE)

2.2.5.2 Jacket Thickness

Ensure the minimum thickness of the jackets at any point is not less than 80 percent of the nominal thicknesses specified in Tables 5-2 and 5-3 of ANSI/NEMA WC 71/ICEA S-96-659 and Table 7-4 of NEMA WC 74/ICEA S-93-639 as applicable.

2.2.6 Cabling

Assemble individual conductors of multiple-conductor cables with flame-and moisture-resistant fillers, binders, and a lay in accordance with Section 8 of NEMA WC 74/ICEA S-93-639 as applicable. Provide non-hygroscopic fillers compatible with the cable insulation, jacket, and other components of the cable in the interstices of multiple-conductor round cables, with a common covering where necessary to give the completed cable a substantially circular cross section. Provide rubber-filled or other approved type of binding tape that is compatible with the other components of the cable and lapped at least 10 percent of its width.

2.2.7 Dimensional Tolerance

Ensure outside diameters of single-conductor cables and of multiple-conductor cables do not vary more than 5 percent and 10 percent, respectively, from the manufacturer's published catalog data.

2.2.8 Cable Identification

Provide cables with printing on the outer jacket showing the name of the manufacturer, conductor size and material, type of insulation and nominal thickness, and the year in which the cable was manufactured. Closely group the information on the tape at 3.3-foot (1 meter) maximum intervals to permit complete identification.

2.3 SPECIAL WIRE AND CABLE

2.3.1 Ground Conductors

Provide ground conductors that are bare, soft-drawn, Class A or B stranded copper cables sized in accordance with NFPA 70, or NEMA WC 74/ICEA S-93-639 Section 8 as applicable.

2.4 SPLICES, CONNECTIONS, AND TERMINATIONS

2.4.1 Nonload Break Connectors

Provide nonload-break terminations that comply with IEEE 386 requirements where the drawings indicate plug-type field connections to equipment terminals, or where otherwise specified. Provide connector with a steel reinforced hook-stick eye, grounding eye, test point, and arc-quenching contact material. Ensure connections are compatible with equipment bushings.

2.4.2 Splices

Provide heat shrink splice kits which are the product of a single manufacturer. Ensure the power cable splice meets the requirements of IEEE 404 for a 15 kV rating, and are rated by the manufacturer for use on 15 kV class cable systems. Ensure splices are rated for continuous operation at 221 degrees F, with an emergency overload temperature rating

of 284 degrees F. Ensure the kit is capable of splicing cables with copper conductors sized as indicated in the contract drawings or accommodate a conductor size transition. Provide splices specifically designed for the cable and grounding provisions.

Provide heat shrink splices which include but are not limited to the following:

a. Inner heat shrink stress control tube with external end sealant, additional heat shrink tube over inner tube and inner tube end sealant.

b. Heat shrink outer wraparound sleeve with heat sensitive indications on both the tube and rail/channel area to indicate proper torch heating, stress relief material, mastic, sealant, shielding mesh, and silicone grease.

Provide splices of a cold shrink design which does not require any additional heat source for installation. The cold shrink splice body must be of a molded design made of silicone rubber with splice jacketing made of EPDM rubber.

2.4.3 Terminations

Provide Class 1A terminations per IEEE 48.

2.5 SUPPORTS, TAGS, AND ACCESSORIES

2.5.1 Cable Supports and Fittings

Provide cable supports, related fittings, and accessories for use in corrosive underground locations, such as manholes and utility tunnels, with a factory-applied coating of PVC of at least 20 mils thick. Provide PVC coated items that have a uniform thickness and are free of blisters, breaks, and holidays. Provide PVC compound that conforms to ASTM D746.

Provide cable racks, cable tray supports and related fittings that are UL-listed standard-duty nonmetallic glass-reinforced nylon .

2.5.2 Cable Tags

Provide cable identification tags of polyethylene or polypropylene that are non-corrosive. Ensure tags are resistive to acids, alkalis, organic solvents, salt water, and are distortion resistant to 149 degrees C. Tags must be suitable for contact with the type of insulation or jacket material used, and be composed of block letters, numbers, and symbols 1 inch high on a yellow background. Ensure letters, numbers, and symbols do not fall off or change positions regardless of the cable tags orientation. Markings must have been tested by an independent testing laboratory or by the manufacturer to indicate that the markings will not stain or discolor when subjected to an accelerated aging test while in contact with the cable materials and ultraviolet light exposure. Provide a one-piece nylon, self-locking tie at each end of the cable tag. Ensure ties have a minimum loop tensile strength of 175 pounds.

2.5.3 Fireproof Tape

Provide fireproof tape approximately 30 mils thick by 3 inches wide, consisting of a flexible, unsupported elastomer that expands in fire to provide a thick char buildup between the flame and the cable. Ensure the

tape does not give off a smoke when subjected to flames or support combustion. Also, ensure tape does not deteriorate when subjected to oil, water, gases, salt water, sewage and fungus.

PART 3 EXECUTION

3.1 INSTALLATION

3.1.1 General

Install medium-voltage cables in accordance with NFPA 70, NFPA 70E; and IEEE C2. Refer to contract provisions for safety submittals and requirements associated with working in the vicinity of energized cables and equipment. The use of arc-flash and shock prevention equipment and personal protective equipment is mandatory. Prior to starting work on a medium-voltage cable system, the Contractor must identify and tag the phasing of equipment with a phase rotation meter, and submitting a Phase Rotation Test Record Form. The Contractor is responsible for maintaining the phasing, and matching the existing phase rotation and phasing when installing conductors in existing electrical systems. Install the cables in the following locations:

Exterior:

a. In underground duct banks

b. In manholes

Inside Buildings:

a. In conduits, exposed or embedded/concealed mounted cable trays

Secure cables with heavy-duty cable ties andor cleats in existing or new trays mounted horizontally, where the cable rests on the tray bottom. Install cable ties at a minimum of 10 foot intervals. Install cleats at intervals as recommended by the cable cleat manufacturer's force calculations. Secure cables with PVC-coated cable clamps, straps, hangers, or other approved supporting devices to tunnel walls and ceilings, where not installed in cable trays. Immediately seal cut ends of cables cut in the field to prevent entrance of moisture with heat-shrinkable molded cable end caps.

3.1.2 Cable Pulling Calculations

Cable pulling calculations must be performed by the cable manufacturer's Field Engineer or by another qualified engineer and approved by the cable manufacturer's Field Engineer. Provide calculations that show the cable manufacturer's maximum allowed pulling force and maximum allowed sidewall pressure are not exceeded, and that cables do not require splices. If the calculations show that a splice is required at any point to avoid damage to the cable, immediately bring to the attention of the Government.

3.1.3 Pulling Cables in Conduits, Ducts, Manholes and Utility Tunnels

Thoroughly clean ducts before installation of power cables. Pull a standard flexible mandrel through each duct to loosen particles of earth, sand, or foreign material in the line. Use a mandrel that is not less than

12 inches long with a diameter 1/2 inch less than the inside diameter of the duct. Then pull a brush with stiff bristles through each duct to remove the loosened particles. Use a brush with a diameter that is the same as or slightly larger than the diameter of the duct. Cable pulling using a vehicle is not be permitted.

Submit a Pulling Plan including staging provisions, known splice and or termination points, calculations of pulling tension and side wall pressure anticipated, the maximum allowable pulling tension for each pull, and the method of measuring pulling tension throughout the pull. Do not perform any pull until Government reviews and approves the pulling plan and the cable pulling calculations. Cables may only be pulled manually, or by use of a tugger designed for cable pulling. Either method must employ a dynamometer to measure pulling tension throughout the pull.

3.1.3.1 Staging

Pull medium-voltage cables into ducts and utility tunnels with equipment designed for this purpose, including a power-driven winch, cable-feeding flexible tube guide, cable grips, and lubricants. Employ a sufficient number of trained personnel and equipment to ensure correct installation of the cable.

Set up the cable reel at the side of the manhole or tunnel hatch opening and above the duct or hatch level, allowing the cable to enter through the opening without reverse bending. Install a flexible tube guide through the opening in a manner that prevents the cable from rubbing against the edges of structural members.

3.1.3.2 Allowable Sidewall Pressure

The allowable sidewall pressure is the smaller of500 pounds per foot of bend radius for 5-15kV shielded cable, 300 pounds per foot for interlocked armored cable and cable rated above 15kV, or the cable manufacturer's recommended maximum value. Show in the pulling plan submittal the calculations for allowable tension and sidewall pressure as well as the anticipated tension and sidewall pressure for each pull in the project.

Unreel cable from the top of the reel, carefully controlling payout. Attach cable to be pulled through a swivel to the main pulling wire by means of a pulling eye installed by the factory or approved cable splicer . Attach pulling eyes to the cable conductors of the 3-1/c circuit to prevent damage to the cable structure. Pull the entire 3-1/c circuit simultaneously.

3.1.3.3 Minimum Bending Radius

Minimum bending radius during cable pulling operations is 30 inches. For permanent cable bending the minimum bending radius is 12 times cable diameter.

3.1.3.4 Coating of Cables

Liberally coat cables with a suitable cable-pulling lubricant as it enters the tube guide or duct. Do not use greaser and oil lubricants. Cover nonmetallic sheathed cables with wire-pulling compounds, when required, which have no deleterious effects on the cable. Use rollers, sheaves or tube guides, around which the cable is pulled, conforming to the 30 inches minimum bending radius of the cable during the pulling operations.

3.1.3.5 Pulling Speed

Pull cables into ducts at a speed not to exceed 50 feet per minute and not in excess of maximum permissible pulling tension specified by the cable manufacturer. Stop pulling operations immediately with any indication of binding or obstruction and do not resume until such difficulty is corrected. Provide sufficient slack for free movement of cable due to expansion or contraction.

3.1.4 Ventilation

Provide a blower to force fresh air into manholes or confined areas where free movement or circulation of air is obstructed.

3.1.4.1 Moisture Control and Water Intrusion

Have waterproof protective coverings available on the work site to protect against moisture while a splice is being made. Use pumps to keep manholes dry during splicing operations. Never make a splice or termination with the interior of a cable exposed to moisture. Use a manhole ring at least 6 inches above ground around the manhole entrance to keep surface water from entering the manhole. Before starting the splice, plug unused ducts and stop water seepage through ducts in use.

3.1.5 Splices

Make splices in manholes or tunnels except where cable terminations are specifically indicated. Expedite splicing and terminating of cables in order to minimize exposure and cable deterioration. If cable splices in the tunnel are not installed in cable trays, install the cable splices on cable racks or by other approved methods that minimize physical stress on the splice connections. Support splices at approximately the same elevation as the installed cable except where space limitations or existing cable length limitations make this method impractical or impossible.

3.1.5.1 Materials

Use only equipment and materials recommended by the splice manufacturer including calibrated cutting equipment to ensure consistent cut depths when preparing cable ends for the application of the splice kit. Use the cable manufacturer's recommended splice kit. Alternatively, if a kit is not available, connect the cable concentric neutral/shield wires across one side of the splice by split bundling the splice neutral wiring and connecting each bundle set to a continuous No. 4 AWG solid bare copper conductor via two compression conductors. Ensure the No. 4 AWG conductor extrudes from the cable splice jacket and connects to the manholes grounding system. Make all connections within the splice utilizing long barrel-type compression connectors and appropriate compression tools with proper size dies to ensure a satisfactory mechanical and electrical joint. Ensure bare connections of concentric neutral/shield wires are either contained within the splice kit or sealed via an additional outer covering,consisting of a heavy wall, heat-shrinkable tubing containing adhesive material (mastic) that melts as heat is applied and the outer tubing shrinks to form a moisture proof environmental seal. Provide outer tubing conforming to ANSI C119.1. Ensure splice meets the requirements of IEEE 404 matching the voltage rating of the cable, and is rated by the manufacturer for use on the same voltage rating as the cable. Take extra

precautions to seal around the exit area of the bare copper jumpers with an additional mastic per the splice manufacturer's recommendations.

3.1.5.2 Splice Support

Firmly support cable splices made up in manholes on cable racks as indicated. Do not pull cable splices in ducts. Overlap cable ends at the ends of a section to provide sufficient undamaged cable for splicing. Overlap cables to be spliced in manholes to the centerline of the proposed joint by not less than 2 feet.

Locate cable splices in manholes midway between the cable racks on the walls of the manholes and supported with cable arms at approximately the same elevation as the enclosing duct. Support each cable end termination using a pair of saddle supports under the cable end termination or cable with a minimum 12 inches and a maximum 30 inches separation between the supports. Secure the cable end termination and cable to the supports in a manner that prevents movement of termination or cable at the support. Install saddle supports on a galvanized steel framing channel that is anchored to the wall, securely fastened to the cable tray, or installed by other approved methods.

3.1.6 Terminations

Terminate cables in approved cable termination kits. Provide terminations with adequate means for making external connections to the cable conductors of single-conductor cables (phase and concentric neutral if applicable), as well as the single cables of multi-conductor cables. Protect the cable insulation against moisture, oil, or other contaminants. Take extra precautions in physically protecting and supporting cables, and maintaining the insulation level of the cable.

3.1.7 Cable Identification

Provide identification of all cables on both ends using the designations shown on the Contract drawings or as otherwise shown on approved shop drawings. Display the designation by tags conforming to Paragraph 2.5.2 Cable Tags. Install markers in uniform positions on the cables, and where the legends are visible where conductors are terminated at the equipment. Fasten the tags or band markers at each termination, junction or pull box, where cables enter or leave cable trays, manholes, and at other points of access. Install cable tags over the fireproofing as needed. Position the tags so that they are clearly visible without disturbing any cabling or wiring.

3.1.8 Fireproofing

Provide fireproofing (Arc Proofing) for individual cable conductor in manholes, handholes and vaults which carry current at 2200 volts or more. Tightly wrap strips of fireproofing tape around each cable spirally in half-lapped wrapping. Extend the tape 1 inch into the ducts. To prevent unraveling, random wrap the fireproofing tape the entire length of the fireproofing with pressure-sensitive glass cloth tape.

3.1.9 Grounding

Include a separate ground conductor in all circuits unless the drawings indicate equipment grounding at both ends to the embedded grounding grid of the facility if available, or unless the ground conductor is an integral

part of a multiple conductor cable. Support exposed ground cable runs to follow conduit, equipment or concrete wall contours using corrosion resistant clamps or clips. Drilling of equipment housings or frames will be permitted only when approved. Use concrete anchors for fastening to concrete surfaces.

3.2 DEMOLITION OR CABLE CUTTING

Notify the Contracting Officer 14 working days prior to an outage for demolition or cable cutting of medium voltage electrical system. The Government has established a mandatory inspection point prior to Contractor performing any medium voltage cable cuts or demolition. Notify the Contracting Officer 48 hours in advance of this mandatory inspection point.

As part of the mandatory inspection point, positively identify and label the medium voltage cable to be worked utilizing an electronic cable identifier. Ensure the process of identifying and labeling the cable to be worked is witnessed by the Government. Cable cutting and demolition of any medium voltage cable can occur only after approval by the Contracting Officer. Cut medium voltage cables and conductors by indirect means using cable cutters specifically designed to be operated remotely only. Cutting of medium voltage cables and conductors by direct means is not permitted.

3.3 FIELD ACCEPTANCE TESTING

3.3.1 Testing

Test per IEEE 400 and NETA ATS recommended procedures.

a. Submit Test Reports in accordance with referenced standards in this section.

b. After completion of the installation and prior to energizing the conductors, perform wire and cable continuity and insulation tests as herein specified.

c. Provide all necessary test equipment, labor, and personnel to perform the tests, as herein specified.

d. Perform all Field Acceptance Testing and submittals as described herein.

e. Isolate completely all wire and cable from all extraneous electrical connections at cable terminations and joints. Use substation and switchboard feeder breakers, disconnects in combination motor starters, circuit breakers in panel boards, and other disconnecting devices to isolate the circuits under test.

f. Retain suitable and complete records indicating the insulation-resistance tests, high voltage tests, continuity tests, phase rotation tests, high potential tests, and conductor identification markings. Provide a duplicate record of all tests to the Contracting Officer. Prior to testing, submit the wire and cable test record form for approval. Provide room for the Contracting Officer's signature on the test report.

3.3.2 Tests to be Performed

After installation, but just prior to terminal connection, perform as a minimum the following tests:

a. Perform a Conductor Continuity Test on each wire and each individual conductor of a multiconductor cable to insure correct connections end-to-end.

b. Perform a Shield Continuity Test on each cable shield.

c. Perform a Shield Resistance Test on each cable shield. Shield resistance must be less than 10 ohms per 1000 feet of cable.

d. Perform an Insulation Resistance Test on each field-installed conductor with respect to ground and adjacent conductors in a cable assembly. Perform applied potential test at 2500 volts DC for 5kV and 15kV rated cable. Minimum insulation resistance values must not be less than 1500 Megohms for 5kV rated cable, and 5000 Megohms for 15kV rated cable.

e. Perform a VLF AC High Potential Test on each shielded cable in accordance with IEEE 400.2. Test each field-installed conductor with respect to ground and adjacent conductors. If the Contractor believes that VLF AC testing is not feasible or not recommended for any given situation, the Contractor may instead perform DC testing with the explicit approval of both the cable manufacturer and the Contracting Officer on an individual case basis. If approved, perform the DC test at the voltage recommended by the cable manufacturer. In lieu of the cable manufacturer's recommendation for a voltage level, perform the test in accordance with NETA ATS Table 100.6.1.

f. Perform a Phase Rotation Test on all three-phase circuits using a phase-rotation indicating instrument. Perform phase rotation of electrical connections to connected equipment to verify matching the phasing at connections to new or existing equipment, and to existing systems.

g. Tests must be witnessed by the Contracting Officer, and the wire and cable installation test reports submitted in accordance with Section 01 33 00, SUBMITTAL PROCEDURES.

3.3.3 Acceptance

Final acceptance will depend upon the successful performance of wire and cable under test. Do not energize any conductors until the final test reports are reviewed and approved by the Contracting Officer.

-- End of Section --

SECTION 26 08 00

APPARATUS INSPECTION AND TESTING
11/22

PART 1 GENERAL

1.1 REFERENCES

The publications listed below form a part of this specification to the extent referenced. The publications are referred to within the text by the basic designation only.

INTERNATIONAL ELECTRICAL TESTING ASSOCIATION (NETA)

NETA ATS	(2025) Standard for Acceptance Testing Specifications for Electrical Power Equipment and Systems

1.2 SUBMITTALS

Government approval is required for submittals with a "G" classification. Submittals not having a "G" classification are for Contractor Quality Control approval. Submit the following in accordance with Section 01 33 00 SUBMITTAL PROCEDURES:

SD-06 Test Reports

Acceptance Tests and Inspections; G

SD-07 Certificates

Qualifications of Organization, and Lead Engineering Technician; G

Acceptance Test and Inspections Procedure; G

1.3 QUALITY ASSURANCE

1.3.1 Qualifications

Engage the services of a qualified testing organization to provide inspection, testing, calibration, and adjustment of the electrical distribution system and generation equipment listed in paragraph ACCEPTANCE TESTS AND INSPECTIONS herein. Organization must be independent of the supplier, manufacturer, and installer of the equipment. The organization must be a first tier subcontractor. No work required by this section of the specification may be performed by a second tier subcontractor.

a. Submit name and qualifications of organization. Organization must have been regularly engaged in the testing of electrical materials, devices, installations, and systems for a minimum of 5 years. The organization must have a calibration program, and test instruments used must be calibrated in accordance with NETA ATS.

b. Submit name and qualifications of the lead engineering technician performing the required testing services. Include a list of three comparable jobs performed by the technician with specific names and

telephone numbers for reference. Testing, inspection, calibration, and adjustments must be performed by an engineering technician, certified by NETA (Level III) or the National Institute for Certification in Engineering Technologies (NICET) with a minimum of 5 years' experience inspecting, testing, and calibrating electrical distribution and generation equipment, systems, and devices.

1.3.2 Acceptance Tests and Inspections Reports

Submit certified copies of inspection reports and test reports. Include certification of compliance with specified requirements, identify deficiencies, and recommend corrective action when appropriate. Type and neatly bind test reports to form a part of the final record. Submit test reports documenting the results of each test not more than 10 days after test is completed.

1.3.3 Acceptance Test and Inspections Procedure

Submit test procedure reports for each item of equipment to be field tested at least 45 days prior to planned testing date. Do not perform testing until after test procedure has been approved.

PART 2 PRODUCTS

Not used.

PART 3 EXECUTION

3.1 ACCEPTANCE TESTS AND INSPECTIONS

Testing organization will perform acceptance tests and inspections. Test methods, procedures, and test values must be performed and evaluated in accordance with NETA ATS, the manufacturer's recommendations, and paragraph FIELD QUALITY CONTROL of each applicable specification section. Tests identified as optional in NETA ATS are not required unless otherwise specified. Place equipment in service only after completion of required tests and evaluation of the test results have been completed. Supply to the testing organization complete sets of shop drawings, settings of adjustable devices, and other information necessary for an accurate test and inspection of the system prior to the performance of any final testing. Notify Contracting Officer at least 14 days in advance of when tests will be conducted by the testing organization. Perform acceptance tests and inspections on applicable equipment and systems specified in the following sections:

a. Section 33 71 02 UNDERGROUND ELECTRICAL DISTRIBUTION. Medium voltage cables and grounding systems only.

3.2 SYSTEM ACCEPTANCE

Final acceptance of the system is contingent upon satisfactory completion of acceptance tests and inspections.

3.3 PLACING EQUIPMENT IN SERVICE

A representative of the approved testing organization must be present when equipment tested by the organization is initially energized and placed in service.

-- End of Section --

THIS PAGE INTENTIONALLY LEFT BLANK

SECTION 31 00 00

EARTHWORK
08/23

PART 1 GENERAL

1.1 REFERENCES

The publications listed below form a part of this specification to the extent referenced. The publications are referred to within the text by the basic designation only.

ASTM INTERNATIONAL (ASTM)

ASTM C33/C33M	(2024a) Standard Specification for Concrete Aggregates
ASTM C150/C150M	(2024) Standard Specification for Portland Cement
ASTM C260/C260M	(2024) Standard Specification for Air-Entraining Admixtures for Concrete
ASTM C618	(2025a) Standard Specification for Coal Fly Ash and Raw or Calcined Natural Pozzolan for Use in Concrete
ASTM C989/C989M	(2025) Standard Specification for Slag Cement for Use in Concrete and Mortars
ASTM D698	(2012; E 2014; E 2015) Laboratory Compaction Characteristics of Soil Using Standard Effort (12,400 ft-lbf/cu. ft. (600 kN-m/cu. m.))
ASTM D1140	(2017) Standard Test Methods for Determining the Amount of Material Finer than 75-µm (No. 200) Sieve in Soils by Washing
ASTM D2321	(2020) Standard Practice for Underground Installation of Thermoplastic Pipe for Sewers and Other Gravity-Flow Applications
ASTM D2487	(2017; E 2020) Standard Practice for Classification of Soils for Engineering Purposes (Unified Soil Classification System)
ASTM D4253	(2016; E 2019) Standard Test Methods for Maximum Index Density and Unit Weight of Soils Using a Vibratory Table
ASTM D4254	(2016) Standard Test Methods for Minimum Index Density and Unit Weight of Soils and Calculation of Relative Density

ASTM D4318	(2017; E 2018) Standard Test Methods for Liquid Limit, Plastic Limit, and Plasticity Index of Soils
ASTM D4829	(2021) Standard Test Method for Expansion Index of Soils
ASTM D4832	(2016; E 2018) Standard Test Method for Preparation and Testing of Controlled Low Strength Material (CLSM) Test Cylinders
ASTM D6023	(2016) Standard Test Method for Density (Unit Weight), Yield, Cement Content, and Air Content (Gravimetric) of Controlled Low-Strength Material (CLSM)
ASTM D6103/D6103M	(2017; E 2021) Standard Test Method for Flow Consistency of Controlled Low Strength Material (CLSM)

U.S. ARMY CORPS OF ENGINEERS (USACE)

EM 385-1-1	(2024) Safety -- Safety and Occupational Health (SOH) Requirements

U.S. ENVIRONMENTAL PROTECTION AGENCY (EPA)

EPA 600/4-79/020	(1983) Methods for Chemical Analysis of Water and Wastes
EPA SW-846.3-3	(1999, Third Edition, Update III-A) Test Methods for Evaluating Solid Waste: Physical/Chemical Methods

1.2 DEFINITIONS

1.2.1 Structural Fill

Soil material placed to support buildings, walls, pads, and other similar facilities.

1.2.2 Porous Fill

Free-draining material placed for subsurface drainage, as a capillary break, or another specific purpose.

1.2.3 Topsoil

Surface layer of primarily organic soil capable of supporting vegetation growth.

1.2.4 Utility Bedding Material

Fill placed to directly support pipes, conduits, cables, and appurtenant structures. Bedding may also be used to provide a cushion between utilities and bedrock, obstacles, obstructions and other unyielding materials.

1.2.5 Flowable Fill

Fill placed in a plastic or liquid form that flows to near its final placement location with limited assistance and subsequently cures or solidifies to provide a stable or impermeable barrier. VDOT RBS Section 249 FLOWABLE BACKFILL. Design compressive strength must be 100 pounds per square inch at 28 days.

1.2.6 Satisfactory Materials

Satisfactory materials for fill, backfill comprise any materials classified by ASTM D2487 as GW, GP, GM, GP-GM, GW-GM, GC, GP-GC, GM-GC, SW, SP, SM, SW-SM, SC,SW-SC, SP-SM, SP-SC, CL, ML. Maximum particle size to be no greater than 3 inches in any dimension.

1.2.7 Unsatisfactory Materials

Materials which do not comply with the requirements for satisfactory materials are unsatisfactory. The unsatisfactory material classification is applicable to proposed fill materials and excavated materials only and not to existing in place subgrade materials. Unsatisfactory materials also include man-made fills; trash; refuse; undocumented backfills from previous construction; fill material classified as satisfactory which contains roots and other organic matter or frozen material, and stones larger than 3 inches. Unsatisfactory material determination will be made by the NAVFAC Geotechnical Engineer and Confirmed by the Contracting Officer. Notify the Contracting Officer when encountering any contaminated materials.

1.2.8 Cohesionless Materials

Cohesionless materials include materials classified in ASTM D2487 as GW, GP, SW, and SP. Materials classified as GM and SM will be identified as cohesionless only when the fines are nonplastic. Perform testing, required for classifying materials, in accordance with ASTM D4318 and ASTM D1140.

1.2.9 Cohesive Materials

Cohesive materials include materials classified as GC, SC, ML, CL, MH, and CH. Materials classified as GM and SM will be identified as cohesive only when the fines are plastic. Perform testing, required for classifying materials, in accordance with ASTM D4318 and ASTM D1140.

1.2.10 Hard/Unyielding Materials

Hard/Unyielding materials comprise weathered rock, dense consolidated deposits, or conglomerate materials which are not included in the definition of "rock" with stones greater than 3 inch in any dimension or as defined by the pipe manufacturer, whichever is smaller. These materials usually require the use of heavy excavation equipment, ripper teeth, or jack hammers for removal.

1.2.11 Unstable Material

Unstable materials are too weak to adequately support the utility pipe, conduit, equipment, or appurtenant structure. Satisfactory material may become unstable due to ineffective drainage, dewatering, becoming frozen, excessive loading.

1.2.12 Expansive Soils

Expansive soils are defined as soils that have an expansion index greater than 20 when tested in accordance with ASTM D4829.

1.2.13 Rock

Solid homogeneous interlocking crystalline material with firmly cemented, laminated, or foliated masses or conglomerate deposits, neither of which can be removed without systematic drilling and blasting, drilling and the use of expansion jacks or feather wedges, or the use of backhoe-mounted pneumatic hole punchers or rock breakers; also large boulders, buried masonry, or concrete other than pavement exceeding 1 cubic yard in volume. Removal of hard material will not be considered rock excavation because of intermittent drilling and blasting that is performed merely to increase production.

1.2.14 Capillary Water Barrier

A layer of clean, poorly graded crushed rock, stone, or natural sand or gravel having a high porosity which is placed beneath a building slab with or without a vapor barrier to cut off the capillary flow of pore water to the area immediately below a slab.

1.2.15 Degree of Compaction (Proctor)

Degree of compaction required, except as noted in the second sentence, is expressed as a percentage of the maximum density obtained by the test procedure presented in ASTM D698 abbreviated as a percent of laboratory maximum density.

1.2.16 Degree of Compaction (Relative Density)

Degree of compaction required for soils with less than 5 percent passing the No. 200 sieve, is expressed as a relative percentage of the maximum index density/dry unit weight and minimum index density/dry unit weight, obtained by the test procedures in accordance with ASTM D4253 and ASTM D4254, respectively, abbreviated as a percent of laboratory relative density.

1.2.17 Borrow

Soil brought to the project site from an external location off of Government property for the purposes of project construction.

1.2.18 Subgrade

Earth materials directly below foundations and directly below granular base materials in building slab and pavement areas including shoulders.

1.2.19 Geotechnically Unsuitable Subgrade

Existing subgrade materials that exhibit insufficient strength or excessive movement after proper execution of work specified in Paragraphs PROTECTION, SURFACE PREPARATION, EXCAVATION and SUBGRADE PREPARATION. Unsuitable subgrade also contains soil mixed with appreciable degradable matter such as organic material, wood, trash and non-inert debris which may affect the performance or life expectancy of the supported facility. Unsuitable

subgrade will be determined by the NAVFAC Geotechnical Engineer and confirmed by the Contracting Officer. Existing subgrade soil materials which do not comply with the requirements for satisfactory materials do not necessarily classify as Geotechnically Unsuitable Subgrade.

1.3 RELATED REQUIREMENTS

Section 32 92 19 SEEDING applies to this section for Topsoil requirements.

1.4 CRITERIA FOR BIDDING

Base bids on the following criteria:

a. Surface elevations are as indicated.

b. Pipes or other artificial obstructions, except those indicated, will not be encountered.

c. Ground water elevations indicated by the boring log were those existing at the time subsurface investigations were made and do not necessarily represent ground water elevation at the time of construction.

d. Normal groundwater depths at the Magazine site and Segregation Facilities sites are at approximately 15 to 35 feet and 17 to 22 feet below the existing ground surface, respectively. Estimated seasonal high water table depths range from 12 to 30 feet at the Magazine site and 15 to 18 feet at the Segregation Facilities sites below the existing ground surface. Seasonal perched water table conditions must be expected during periods of wet weather at a depth of approximately 3 feet below existing ground surface. Employ measures and equipment to permit construction to proceed during periods of wet weather

e. Material character is indicated by the boring logs. Linear interpolation of stratification depths must be used to estimate quantities of material types between adjacent boring test locations.

f. Hard materials and rock will not be encountered.

g. Imported material from off of Government property will be required for all Structural Fill Material, Select Material, Utility Bedding, Porous Fill, and Aggregate Base Course. Excavated onsite soils removed from planned excavations must be mechanically processed, blended and moisture conditioned and may only be reused as Common Fill or the processed soil mixed with imported Structural Fill to meet the requirements for Magazine Embankment Earth Cover Material.

h. Blasting will not be permitted. Remove matrial in a approved manner.

i. Demolition, removal and disposal of unforeseen buried concrete, abandoned foundations/structures, piping, creosote timbers and metal debris not identified on the project plans and greater than 1/2 cubic yard in volume encountered within planned excavations and replacement with imported Select Material will be paid for under the Unit Price Line Item on the Price Schedule.

j. The base bid must include undercut of 4,000 cubic yards of geotechnically unsuitable subgrade soils (i.e. soft subgrade soils) and replacment with imported Select Material or VDOT #57 crushed stone.

Unsuitable subgrade soil determinations must be made by the NAVFAC Geotechnical Engineer and approved by the Contracting Officer. The work must include removal of geotechnically unsuitable soils encountered at the planned footing subgrades or identified during proofrolling of planned subgrades, placement of the undercut excavation soils in the designated onsite Common Fill Areas, and backfilling the excavation with compacted imported Select Material or imported VDOT #57 crushed stone. Soils disturbed by the contractor's construction activities, or that are excessively wet and soft due to lack of proper site maintenance and protection measures, and lack of specified drainage or excavation dewatering will not be considered unsuitable. This work must include all handling and transportation. The volume of material removed and imported backfill required must be neat quantities determined based on field measurements (length x width x depth) of the completed excavation to remove the unsuitable soil as determined by the NAVFAC Geotechnical Engineer and approved by the Contracting Officer. This work will not proceed without prior written approval of the Contracting Officer and direction of the NAVFAC Geotechnical Engineer.

1.5 REQUIREMENTS FOR OFF SITE SOIL

Soils brought in from off site for use as backfill must be tested via representative in-situ testing for the State of Virginia DEQs Table 2 (Management of and Reuse of Contaminated Media Guidance/#LPR-SW-01-2012) and additional analysis as required by the Installation as listed below:

a. Target Analyte List (TAL) Inorganics (total metals)

b. Target Compound List (TCL) Volatile Organic Compounds (VOCs), including benzene, toluene, ethylbenzene, and xylene

c. TCL Semi-Volatile Organic Compounds (SVOCs)

d. TCL Polychlorinated Biphenyl's (PCBs)

e. TCL Pesticides

f. Chlorinated Dioxins

g. Total Petroleum Hydrocarbons (TPH)

h. Total Organic Halogen/Halide (TOX)

i. Per and Polyfluoroakyl Substances (PFAS)

All analysis, methods, and sample collection must be conducted in accordance with EPA SW-846 test methods for evaluating solid waste, Physical/Chemical methods. PFAS must be analyzed and collected via EPA standard operating procedures and method in accordance with the DoD QSM V 5.3, Table B-15. Analytical laboratories must be ELAP certified/accredited and provided to the Installation Environmental Hazardous Waste program manager for approval prior to sample collection.

Backfill must not contain concentrations of these analytes above the appropriate State and/or EPA criteria. Provide borrow site testing for petroleum hydrocarbons and BTEX from a grab sample of material from the area most likely to be contaminated at the borrow site (as indicated by visual or olfactory evidence), with at least one test from each borrow site. For each borrow site, provide borrow site testing from a composite

sample of material, collected in accordance with standard soil sampling techniques. Do not bring material onsite until tests results have been received and approved by the Installation Environmental Hazardous Waste Program Manager and Contracting Officer.

1.6 SUBMITTALS

Government approval is required for submittals with a "G" classification. Submittals not having a "G" classification are for Contractor Quality Control approval. Submit the following in accordance with Section 01 33 00 SUBMITTAL PROCEDURES:

SD-01 Preconstruction Submittals

SD-03 Product Data

Flowable fill mix design; G

Dewatering Work Plan; G

SD-06 Test Reports

Select Material Testing; G

Density tests; G

Submit copies of all laboratory and field test reports within 24 hours of the completion of the tests.

1.7 QUALITY CONTROL

1.7.1 Dewatering Work Plan

Submit procedures for accomplishing dewatering work. The plan must address and describe how the Contractor will accomplish the required site preparation and excavation work when surface and/or subsurface water is present. The Dewatering Work Plan must comply with the requirements of Section 01 57 19 TEMPORARY ENVIRONMENTAL CONTROLS.

1.7.2 Quality Assurance Field Inspections

Perform Quality Assurance Inspections and testing in accordance with Section 01 45 25 QUALITY ASSURANCE FIELD INSPECTIONS.

1.7.3 Utilities

Movement of construction machinery and equipment over pipes and utilities during construction must be at the Contractor's risk. Excavation made with power-driven equipment is not permitted within two feet of known Government-owned utility or subsurface construction. For work immediately adjacent to or for excavations exposing a utility or other buried obstruction, excavate by hand. Start hand excavation on each side of the indicated obstruction and continue until the obstruction is uncovered or until clearance for the new grade is assured. Support uncovered lines or other existing work affected by the contract excavation until approval for backfill is granted by the Contracting Officer. Report damage to utility lines or subsurface construction immediately to the Contracting Officer.

PART 2 PRODUCTS

2.1 SOIL MATERIALS

2.1.1 Satisfactory Materials

Materials classified by ASTM D2487 as GW, GP, GM, GP-GM, GW-GM, GC, GP-GC, GM-GC, SW, SP, SM, SW-SM, SC, SW-SC, SP-SM, SP-SC,and properly processed and moisture conditioned CL, ML, CL-ML, CH, and MH free of debris, roots, wood, scrap material, vegetation, refuse, soft unsound particles, and frozen, deleterious, or objectionable materials. Unless specified otherwise, the maximum particle diameter must be 3 inches. All material will be moisture conditioned to within +/- 2 percent of the optimum moisture content as defined by ASTM D698 prior to placement and compaction. All CL, ML, CL-ML, CH, and MH soils will require soil processing as outlined in Section 2.1.1.1.1 SOIL PROCESSING AND BENDING.

2.1.1.1 On-site Materials for Reuse as Common Fill

On-site material meeting the required characteristics to compact to the density specified for the intended locations (i.e. Satisfactory) may be reused on-site as Common Fill unless specified otherwise. All on-site materials must be mechanically processed and blended to permit re-use as indicated in Section 2.1.1.1.1 SOIL PROCESSING AND BLENDING

2.1.1.1.1 Soil Processing and Blending

Mechanical processing and blending will be required for all CL, ML, CL-ML, CH, and MH soils prior to being reused as Common Fill. The soil processing and blending operations must be performed in the designated staging areas. The Contractor must provide all necessary equipment and resources to ensure the successful implementation of the processing and blending operations and reuse of the material as Common Fill. The excavated on-site soils must be processed using applicable equipment (i.e. soil pulverizer, clay shredder, or soil mill) to properly reduce the material to a maximum particle diameter of 3 inches. The mechanically processed soils must be mixed blended to create a uniform consistency. After completion of the processing, the material must be mixed with 5% lime to moisture condition the material to within +/- 2 percent of the optimum moisture content, if necessary. Care must be taken during processing and mixing to ensure that the material does not become segregated. Temporary stockpiles of processed and blended materials must be covered to mitigate moisture intrusion. 30 days prior to the start of soil processing operations, a soil processing plan must be prepared by the Contractor's Geotechnical Engineer and submitted to the NAVFAC Geotechnical Engineer for approval. The soil processing plan must indicate the proposed method for reducing the size of material, how the soil will be mixed with the lime, and means for reducing segregation of the material, and any other applicable items. Full-time observation by Contractor's Geotechnical Engineer is required during all soil processing operations to verify that soil processing plan is being followed.

2.1.2 Unsatisfactory Materials

Fill materials which do not comply with the requirements for satisfactory materials. The unsatisfactory material classification is applicable to proposed fill materials and excavated materials only and not to existing in place subgrade materials. Unsatisfactory materials also include fills containing trash or refuse and undocumented backfills from previous

construction. Unsatisfactory material also includes fill material classified as satisfactory which contains root and other organic matter, frozen material, and stones larger than 3 inches. Unsatisfactory material determination will be made by the NAVFAC Geotechnical Engineer and Confirmed by the Contracting Officer. The Contracting Officer must be immediately notified of any contaminated materials.

2.1.3 Common Fill

Approved, unclassified soil material with the characteristics required to compact to the soil density specified for the intended location.

2.1.4 Structural Fill Material

ASTM D2487, classification GW, GP, GM, SW, SP, SP-SM, SM, with a maximum ASTM D4318 liquid limit of 30, maximum ASTM D4318 plasticity index of 6, and a maximum of 20 percent by weight passing ASTM D1140, No. 200 sieve.

2.1.5 Select Material

Provide materials classified as GW, GP, SW, SP, or SP-SM by ASTM D2487 where indicated. The plasticity index must not be greater than zero when tested in accordance with ASTM D4318. The bearing ratio at 0.1 inch penetration must be 20 percent at 95 percent ASTM D698 maximum density as determined in accordance with ASTM D1883 for a laboratory soaking period of not less than 4 days.

2.1.6 Topsoil

To be allowed for limited reuse, onsite topsoil and organic material excavated from the O and A soil horizons must be : Natural, friable soil representative of productive, well-drained soils in the area, free of subsoil, stumps, rocks larger than one inch diameter, brush, weeds, toxic substances, and other material detrimental to plant growth. Excavated onsite topsoil must not be utilized on magazine slopes.

All topsoil, whether onsite excavated or imported, must additionally meet the requirements of Section 32 92 23 SODDING.

2.1.7 Utility Bedding Material

Except as specified otherwise in the individual piping section, provide bedding for buried piping in accordance with ASTM D2321. Backfill to top of pipe must be compacted to 95 percent of ASTM D698 maximum density. Install bedding for plastic piping to spring line of pipe. Provide geotextile fabric below bedding layer where indicated. Utility bedding material may include the following:

2.1.7.1 Sand

Clean, coarse-grained ASTM C33/C33M sand classified SW by ASTM D2487 for bedding and backfill.

2.1.7.2 Gravel and Crushed Stone

Clean, coarsely graded natural gravel, No. 57 crushed stone or a combination thereof identified as aggregate blend of size 5, 6 and 7 stone of the DOT RBS of the Virginia State Standard or having a classification of GW in accordance with ASTM D2487 for bedding. Do not exceed maximum

particle size of 3 inches.

2.2 FLOWABLE FILL

Design and submit flowable fill mix design to consist of Portland cement, fly ash, and/or slag cement and fine aggregate. Include the dry weights of cementitious material(s); quality and gradation of aggregates in the saturated surface-dry weights along with gradation tests; quantities, types, and names of admixtures; and quantity of water per cubic yard. The minimum unconfined compressive strength to be 100 psi at 28 days in accordance with ASTM D4832. The aggregates in accordance with ASTM C33/C33M Fine Aggregates. Air-entrain fill in accordance with ASTM C260/C260M. The air content to be between 8 and 15 percent in accordance with ASTM D6023. The flow to be between 8 and 12 inches in accordance with ASTM D6103/D6103M. Portland cement to be Type I or II in accordance with ASTM C150/C150M. Fly ash to be Class C in accordance with ASTM C618. Provide slag cement in Grade 100 or 120 in accordance with ASTM C989/C989M.

2.3 BURIED WARNING AND IDENTIFICATION MARKERS

Provide polyethylene plastic warning tape manufactured specifically for warning and identification of buried utility lines. Provide tape on rolls, 3 inches minimum width, color coded as specified below for the intended utility with warning and identification imprinted in bold black letters continuously over the entire tape length. Warning and identification to read, "CAUTION, BURIED (intended service) LINE BELOW" or similar wording. Provide permanent color and printing, unaffected by moisture or soil.

Warning Tape Color Codes	
Red	Electric
Yellow	Gas, Oil; Dangerous Materials
Orange	Telephone and Other Communications
Blue	Water Systems
Green	Sewer Systems
White	Steam Systems
Gray	Compressed Air
Purple	Non Potable, Reclaimed Water, Irrigation and Slurry lines

2.3.1 Warning Tape for Metallic Piping

Provide acid and alkali-resistant polyethylene plastic tape conforming to the width, color, and printing requirements specified above, with a minimum thickness of 0.003 inch and a minimum strength of 1500 psi lengthwise, and 1250 psi crosswise, with a maximum 350 percent elongation.

2.3.2 Detectable Warning Tape for Non-Metallic Piping

Provide polyethylene plastic tape conforming to the width, color, and printing requirements specified above, with a minimum thickness of 0.004

inch, and a minimum strength of 1500 psi lengthwise and 1250 psi crosswise. Manufacture tape with integral wires, foil backing, or other means of enabling detection by a metal detector when tape is buried up to 3 feet deep. Encase metallic element of the tape in a protective jacket or provide with other means of corrosion protection.

2.3.3 Detection Wire for Non-Metallic Piping

Insulate a single strand, solid copper detection wire with a minimum of 12 AWG.

2.4 BORROW

Provide borrow materials from sources located outside of Government property, unless otherwise indicated.

2.5 BACKFILL FOR FOUNDATION DRAINAGE AND ROADWAY EDGEDRAIN

Clean gravel conforming to ASTM C33/C33M No 57 stone for the foundation drains and for the roadway edgedrains as shown on the plans.

2.6 OPEN GRADED AGGREGATE BASE COURSE

Provide open-graded aggregate base course conforming to No. 57 crushed stone for the Load Transfer Platform material.

PART 3 EXECUTION

3.1 PROTECTION

Perform all work specified in accordance with applicable requirements of the Corps of Engineers publication EM 385-1-1 Safety and Health Requirements Manual. Provide a Geotechnical Engineer to monitor construction activities and to prepare necessary work plans and reports; see paragraph QUALITY CONTROL.

Use equipment of type and size appropriate for the site conditions. Maintenance of exposed subgrades and fills is the responsibility of the Contractor. The Contractor is required to prevent damage by ineffective drainage, dewatering, and heavy loads and equipment by implementing precautionary measures. Repair or replace any defects or damage.

3.1.1 Underground Utilities

Location of the existing utilities indicated is approximate. Physically verify the location and elevation of the existing utilities indicated prior to starting construction. The Contractor is responsible for protecting utilities from damage during construction.

3.1.2 Drainage and Dewatering

Provide for the collection and disposal of surface and subsurface water encountered during construction.

3.1.2.1 Drainage

So that construction operations progress successfully, completely drain construction site during periods of construction to keep soil materials sufficiently dry. The Contractor must establish/construct storm drainage

features (ponds/basins) at the earliest stages of site development, and throughout construction grade the construction area to provide positive surface water runoff away from the construction activity and/or provide temporary ditches, dikes, swales, and other drainage features and equipment as required to maintain dry soils, prevent erosion and undermining of foundations. When unsuitable working platforms for equipment operation and unsuitable soil support for subsequent construction features develop, remove unsuitable material and provide new soil material as specified herein. It is the responsibility of the Contractor to assess the soil and groundwater conditions presented by the plans and specifications and to employ necessary measures to permit construction to proceed. Excavated slopes and backfill surfaces must be protected to prevent erosion and sloughing. Excavation must be performed so that the site, the area immediately surrounding the site, and the area affecting operations at the site must be continually and effectively drained.

3.1.2.2 Dewatering

Control groundwater flowing toward or into excavations to prevent sloughing of excavation slopes and walls, boils, uplift and heave in the excavation and to eliminate interference with orderly progress of construction. French drains, sumps, ditches or trenches are not allowed within 3 feet of the foundation of any structure, except with specific written approval, and after specific contractual provisions for restoration of the foundation area have been made. Perform control measures by the time the excavation reaches the water level in order to maintain the integrity of the in-situ material. While the excavation is open, maintain the water level continuously, at least 2 feet below the working level. Submit a Dewatering Work Plan outlining procedures for accomplishing dewatering work. Operate dewatering system continuously until construction work below existing water levels is complete. Measure and record performance of dewatering system at same time each day by use of observation wells or piezometers installed in conjunction with the dewatering system. Submit dewatering performance records weekly.

3.1.3 Shoring and Sheeting

Provide shoring, bracing, trench boxes, underpinning, and sheeting where indicated. In addition to Section 25 A and B of EM 385-1-1 ,and other requirements set forth in this contract include provisions in the shoring and sheeting plan that will accomplish the following:

a. Prevent undermining of pavements, foundations and slabs.

b. Prevent slippage or movement in banks or slopes adjacent to the excavation.

Submit an Excavation and Trenching Plan to stabilize features, prevent undermining or unintended horizontal and vertical movement of adjacent structures, and prevent slippage or movement in banks or slopes adjacent to the excavation. Submit drawings and calculations, certified by a registered professional engineer, describing the methods for shoring and sheeting of excavations. Drawings to include material sizes and types, arrangement of members, and the sequence and method of installation and removal. Calculations are to include data and references used.

3.1.4 Protection of Graded Surfaces

Protect newly backfilled, graded, and topsoiled areas from traffic, erosion, and settlements that may occur. Repair or reestablish damaged grades, elevations, or slopes.

3.1.5 Machinery and Equipment

Movement of construction machinery and equipment over pipes during construction must be at the Contractor's risk. Repair, or remove and provide new pipe for existing or newly installed pipe that has been displaced or damaged.

3.2 BORROW

Select borrow material to meet the requirements and conditions of the fill or embankment for which it is to be used. Obtain borrow material from approved private sources. Submit a Borrow Plan that includes materials to be excavated, stockpile locations, proposed slopes, drainage, and closure. Unless otherwise provided in the contract, the Contractor is responsible for obtaining the right to procure material, pay royalties and other charges involved, and bear the expense of developing the sources, including rights-of-way for hauling from the owners. Unless specifically provided, do not obtain borrow within the limits of the project site without prior written approval.

3.2.1 Contractor Furnished Borrow Area(s)

Obtain approved borrow materials from approved offsite sources. If a borrow source is selected that is not a commercial entity from which soil material is directly purchased, submit a Borrow Plan that includes the borrow source location, geotechnical test results showing the fill material meets the Contract requirements, environmental test results in accordance with paragraph ENVIRONMENTAL REQUIREMENTS FOR OFF-SITE SOIL, and any Federal, State, and local permits required for excavation and reclamation of the borrow area.

3.2.2 Environmental Requirements for Off-Site Soil

Test offsite soils brought in for use as backfill for Total Petroleum Hydrocarbons (TPH), Benzene, Toluene, Ethyl Benzene, and Xylene (BTEX) and full Toxicity Characteristic Leaching Procedure (TCLP) including ignitability, corrosivity and reactivity. Backfill may not contain concentrations above appropriate State and EPA criteria, and for hazardous waste characteristics 10 parts per million (ppm) of total petroleum hydrocarbons (TPH) and 10 ppm of the sum of Benzene, Toluene, Ethyl Benzene, and Xylene (BTEX) and pass the TCPL test. Determine TPH concentrations by using EPA 600/4-79/020 Method 418.1. Determine BTEX concentrations by using EPA SW-846.3-3 Method 5030/8020/8260B. Perform TCLP in accordance with EPA SW-846.3-3 Method 1311. Perform hazardous waste characteristic tests for ignitability, corrosivity, and reactivity in accordance with accepted standard methods. Perform PCB testing in accordance with accepted standard methods for sampling and analysis of bulk solid samples. Provide borrow site testing for petroleum hydrocarbons and BTEX from a grab sample of material from the area most likely to be contaminated at the borrow site (as indicated by visual or olfactory evidence), with at least one test from each borrow site. Provide borrow site testing for hazardous waste characteristics (TPH, BTEX and TCLP) from a composite sample of material, collected in accordance

with standard soil sampling techniques. Do not bring borrow material to project site until Borrow Plan containing environmental test results has been received and approved by the Contracting Officer.

3.3 SURFACE PREPARATION

3.3.1 Subgrade Maintenance

Maintenance of exposed subgrades is the responsibility of the Contractor. The Contractor is required to prevent damage by heavy loads and equipment to the subgrade by implementing precautionary measures such as construction of temporary haul roads and the use of timber matting. Any defects or damage must be repaired or replaced at the Contractor's expense before placement of any succeeding courses.

3.3.2 Stripping

Strip suitable soil from the site where excavation or grading is indicated and stockpile separately from other excavated material. Strip site of pavement material where indicated on the plans. Remove the existing railroad tracks, ties, ballast stone and any sub-ballast where indicated on the plans. Screen organics from ballast stone and stockpile for reuse on this project as needed. Haul unused ballast stone offsite.

Existing surface materials will be stripped to a depth of 9 inches below the existing ground surface in areas designated as Clear and Grub on the plans to remove surficial topsoil, root mat, tree stumps, and other deleterious organic material.

Existing surficial soils will be stripped to a depth of 6 inches in all other areas. Stripping will be performed in all areas within the planned limits of disturbance.

Stripped surficial soil must remain separate from Common Fill.

After completion of site stripping, the entire project site must be root raked to a depth of 9 inches below the stripped ground surface. Immediately following root raking operations, the exposed subgrade will be recompacted with a minimum of three passes with a 15 ton smooth drum roller using static compactive effort.

All stripping and root raking operations must be monitored on a full-time basis by the Contractor's Geotechnical Engineer.

All stripped soil materials that are not suitable for reuse as topsoil must be disposed of offsite.

All stripped topsoil suitable for reuse must be screened and free of stumps, large root mat, and inorganic debris prior stockiling or reuse. Organic material maybe be ground before screening and must meet section 32 92 19 SEEDING 2.3.6 Composted Derivatives requirements for reuse.

All stripped non-topsoils and Common Fill suitable for reuse must be screened to remove roots and organic materials prior to reuse or stockpiling.

All root material and other non-suitable organic material must be disposed of off site as specified at the Contractor's expense.

Stripped onsite topsoil must not be utilized on Magazine slopes.

3.3.3 Unsuitable Material

Remove vegetation, debris, decayed vegetable matter, sod, mulch, and rubbish underneath paved areas, Magazine and roadway embankments or concrete slabs.

3.3.4 Proof Rolling

Perform proof rolling on exposed subgrade that is unfrozen and free of surface water (wet conditions resulting from rainfall)which would promote degredation of an otherwise acceptable subgrade. Notify the Contracting Officer a minimum of three days prior to proof rolling. Perform proof rolling in the presence of the NAVFAC Geotechnical Engineer. Rutting or pumping of material must be corrected as determined by the NAVFAC Geotechnical Engineer and confirmed by the Contracting Officer.

After stripping, excavating, and rough grading to the planned elevation, proof roll the existing subgrade of all building, pavement and magazine embankment areas located outside of the load transfer platform, within the forklift charging station, within the forklift ramp areas and within mechanical equipment areas with six passes of a loaded tandem axle dump truck or 15 ton, pneumatic-tired or smooth drum roller. Operate the roller or truck in a systematic manner to ensure the number of passes over all areas, and at speeds between 2.5 to 3.5 miles per hour. Subgrade materials that exhibit excessive deflection and/or rutting during proof rolling need to be scarified, aerated, and re-compacted to specified density at plus or minus 2 percent of optimum moisture content prior to being considered for remedial action by the Contracting Officer. When proof rolling under buildings, the building subgrade is considered to extend 5 feet beyond the building lines, and make one-half of the passes with the roller in a direction perpendicular to the other passes.

3.3.5 Stockpiling Operations

Place and grade stockpiles of satisfactory and unsatisfactory as specified. Keep stockpiles in a neat and well drained condition, giving due consideration to drainage at all times. Clear, grub, and seal by rubber-tired equipment, the ground surface at stockpile locations; separately stockpile excavated satisfactory and unsatisfactory materials. Protect stockpiles of satisfactory materials from contamination which may destroy the quality and fitness of the stockpiled material.

Topsoil stockpiles must not exceed 6' height to avoid soil compaction. Cover topsoil stockpiles in a 3" layer of mulch or other organic matter to regulate temperatrures and moisture to preserve microbial activity. Where topsoil will be stockpiled for longer than 3 months, seed with temporary cover crop.

Do not create stockpiles that could obstruct the flow of any stream, endanger a partly finished structure, impair the efficiency or appearance of any structure, or be detrimental to the completed work in any way. If the Contractor fails to protect the stockpiles, and any material becomes unsatisfactory, remove and replace such material with satisfactory material from approved sources.

3.4 EXCAVATION

Excavate to contours, elevation, and dimensions indicated. Reuse excavated materials only as specified in Paragraph 3.4.3 "Excavated Materials". Keep excavations free from water. Excavate soil disturbed or weakened by Contractor's operations, and soils softened or made unstable for subsequent construction due to exposure to weather. Use material removed from excavations meeting the specified requirements in the construction of fills, embankments, subgrades, shoulders, bedding (as backfill), and for similar purposes to minimize surplus material and to minimize additional material to brought on site. Do not excavate below indicated depths except to remove unstable material as determined by the NAVFAC Geotechnical Engineer and confirmed by the Contracting Officer. Remove and replace excavations below the grades shown with appropriate materials as directed by the Contracting Officer. Refill with select material where indicated and compact to 95 percent of ASTM D698 maximum density. Unless specified otherwise, refill excavations cut below indicated depth with select material where indicated and compact to 95 percent of ASTM D698 maximum density. Satisfactory material removed below the depths indicated, without specific direction of the Contracting Officer, must be replaced with compacted imported backfill and fill to the indicated excavation grade. Determination of elevations and measurements of approved undercut depth excavation of unsuitable material below subgrades indicated must be done under the direction of the NAVFAC Geotechnical Engineer and approved by the Contracting Officer.

If at any time during excavation, including excavation from borrow areas, the Contractor encounters material that may be classified as rock or as hard/unyielding material, uncover such material, and notify the Contracting Officer. Do not proceed with the excavation of this material until the Contracting Officer has classified the materials as common excavation or rock excavation. Failure on the part of the Contractor to uncover such material, notify the Contracting Officer, and allow sufficient time for classification and delineation of the undisturbed surface of such material will cause the forfeiture of the Contractor's right of claim to any classification or volume of material to be paid for other than that allowed by the Contracting Officer for the areas of work in which such deposits occur.

3.4.1 Trench Excavation Requirements

Excavate the trench as recommended by the manufacturer of the pipe to be installed. Slope trench walls below the top of the pipe, or make vertical, and of such width as recommended by the manufacturer. Provide vertical trench walls where no manufacturer installation instructions are available. Do not exceed the trench width of 24 inches below the top pipe plus pipe outside diameter (O.D.) for pipes of less than 24 inches inside diameter, and do not exceed 36 inches plus pipe outside diameter for pipe sizes larger than 24 inches inside diameter. Where recommended trench widths are exceeded, provide redesign, stronger pipe, or special installation procedures. The Contractor is responsible for the cost of redesign, stronger pipe, or special installation procedures without any additional cost to the Government.

3.4.1.1 Bottom Preparation

Grade the bottoms of trenches accurately to provide uniform bearing and support for the bottom quadrant of each section of the pipe. Excavate bell holes to the necessary size at each joint or coupling to eliminate

point bearing. Remove stones of 3 inches or greater in any dimension, or as recommended by the pipe manufacturer, whichever is smaller, to avoid point bearing.

3.4.1.2 Removal of Unyielding Material

Where unyielding material is encountered in the bottom of the trench, notify the Contracting Officer. Following approval, remove such material 12 inches below the required grade and replaced with suitable materials as provided in paragraph FILLING AND COMPACTION.

3.4.1.3 Removal of Unstable Material

Where unstable material is encountered in the bottom of the trench, remove such material to the depth directed and replace it to the proper grade with suitable material as provided in paragraph FILLING AND COMPACTION. When removal of unstable material is required due to the Contractor's fault or neglect in performing the work, the Contractor is responsible for excavating the resulting material and replacing it without additional cost to the Government.

3.4.1.4 Excavation for Appurtenances

Provide excavation for manholes, catch-basins, inlets, or similar structures of sufficient size to permit the placement and removal of forms for the full length and width of structure footings and foundations as shown.

3.4.1.5 Gas Distribution

Excavate trenches to a depth that will provide a minimum 24 inches of cover.

3.4.1.6 Water Lines

Excavate trenches to a depth that provides a minimum cover of 1 foot from the existing ground surface, or from the indicated finished grade, whichever is lower, to the top of the pipe.

3.4.2 Excavated Materials

Satisfactory excavated material must only be reused as Common Fill as outlined in parapragh Common Fill Placement and must be mechanical processed and blending as outlined in paragraph Soil Processing and Blending. Satisfactory material in excess of that required for the permanent work and all unsatisfactory material must be disposed of as specified in Paragraph "DISPOSITION OF SURPLUS MATERIAL".

3.4.3 Final Grade of Surface to Support Concrete

Excavation to final grade must not be made until just before concrete is to be placed. Approximately level surfaces must be roughened, and sloped surfaces must be cut as indicated into rough steps or benches to provide a satisfactory bond for compacting materials.

3.4.4 Underground Utilities

Perform work adjacent to utilities in accordance with procedures outlined by utility owner. Excavation made with power-driven equipment is not

permitted within 2 feet of known utility or subsurface construction. For work immediately adjacent to or for excavations exposing a utility or other buried obstruction, excavate by hand. Start hand excavation on each side of the indicated obstruction and continue until the obstruction is uncovered or until clearance for the new grade is assured. Support uncovered lines or other existing work affected by the contract excavation until approval for backfill is granted by the Contracting Officer. Report damage to utility lines or subsurface construction immediately to the Contracting Officer.

3.4.5 Structural Excavation

Make excavations to the lines, grades, and elevations shown, or as directed. Provide trenches and foundation pits of sufficient size to permit the placement and removal of forms for the full length and width of structure footings and foundations as shown. Clean foundation subgrades of loose debris and cut to a firm, level surface.

Concrete placement is not allowed until footing subgrades have been inspected and approved by the Contracting Officer.

3.4.6 Structures with Spread Footings

Ensure that footing subgrades have been inspected and approved by the NAVFAC Geotechnical Engineer and Contracting Officer prior to the palcement of No. 57 Stone, reinforcing steel, and concrete placement. Fill over excavations with concrete during foundation placement unless otherwise directed by the Contracting Officer.

3.4.7 Pipe Trenches

Excavate to the dimension indicated. Bedding is required as specified for all pipes. Grade bottom of trenches to provide uniform support for each section of pipe after pipe bedding placement. Tamp if necessary to provide a firm pipe bed. Recesses must be excavated to accommodate bells and joints so that pipe will be uniformly supported for the entire length.

3.5 SUBGRADE PREPARATION

3.5.1 General Requirements

Equipment used for site preparation and hauling must be of type and size appropriate for the site conditions (soil character and moisture content). The Contractor is responsible for not causing deterioration to the subgrade stability/integrity by excessive equipment loads or traffic passes. Utilize tracked equipment and methods to minimize subgrade damage. Unsuitable material in surfaces to receive fill or in excavated areas, as determined by proof rolling for pavements and areas outside of the load transfer platform or visual inspection for areas within the load transfer platform, must be removed and replaced with Structural Fill or Select Material as directed by the NAVFAC Geotechnical Engineer and approved by the Contracting Officer. The NAVFAC Geotechnical Engineer will inspect and approve the exposed subgrade within the Load transfer Platform areas immediately upon completion of the excavation to planned subgrade elevation. The NAVFAC Geotechnical Engineer will inspect and approve the exposed foundation subgrade soils for the shallow foundations prior to placement of No. 57 stone, reinforcing steel, and concrete. Notify the Contracting Officer and the NAVFAC Geotechnical Engineer a minimum of 48 hours prior to planned excavations.

Shape subgrade to line, grade, and cross section as indicated. Remove unsatisfactory and unstable material in surfaces to receive fill or in excavated areas, and replaced with structural fill. Do not place material on surfaces that are muddy, frozen, contain frost, or otherwise containing unstable material. Scarify the surface to a depth of 6 inches prior to placing fill. Step or bench sloped surfaces steeper than 1 vertical to 4 horizontal prior to scarifying. Sloped surfaces steeper than 1 vertical to 4 horizontal must be plowed, stepped, benched, or broken up so that the fill material will bond with the existing material. Place 6 inches of loose fill and blend with scarified material. When subgrade is part fill and part excavation or natural ground, scarify to a depth of 12 inches and compacted as specified for the adjacent fill.Compaction must be accomplished by sheepsfoot rollers, pneumatic-tired rollers, steel-wheeled rollers, or other approved equipment well suited to the soil being compacted. Material must be moistened or aerated as necessary to plus or minus 2 percent of optimum moisture content prior to placement. Minimum subgrade density must be as specified herein.

3.5.2 Subgrade for Structures, Spread Footings, and Concrete Slabs

Do not excavate below depth shown for structures, spread footings, and concrete slabs. If over excavation occurs, notify the Contracting Officer and remove, replace, and compact as directed. Compact disturbed material to 95 percent of ASTM D698. After final rolling, the surface of the subgrade for buildings and pavements must not show deviations greater than 0.05 foot when tested with a 12-foot straightedge applied both parallel and at right angles to the centerline of the area.

3.5.3 Subgrade for Pavements

Compact top 12 inches of subgrade for pavements to at least 95 percent of ASTM D698. After final rolling, the surface of the subgrade for buildings and pavements must not show deviations greater than 0.05 foot when tested with a 12-foot straightedge applied both parallel and at right angles to the centerline of the area.

3.5.4 Subgrade for Turf and Mixed Open Space Planting

Compact top 12 inches of subgrade, to 90 percent of ASTM D698. All Magazine slopes must be compacted to 95 percent of ASTM D698. Prior to installation of topsoil, distribute and till in 1"-2" of compost/organic matter within top 4".

3.6 FILLING AND COMPACTION

Prepare ground surface on which backfill is to be placed and provide compaction requirements for backfill materials in conformance with the applicable portions of paragraphs for SUBGRADE PREPARATION. Do not place material on surfaces that are muddy, frozen, or contain frost. Finish compaction by sheepsfoot rollers, pneumatic-tired rollers, steel-wheeled rollers, or other approved equipment well suited to the soil being compacted. Moisten material as necessary to plus or minus 2 percent of optimum moisture. Fill and backfill to contours, elevations, and dimensions indicated. Compact and test each lift before placing overlaying lift.

3.6.1 Common Fill Placement

Provide for general site and as indicated on the drawings. Place in 8 inch horizontal lifts. Compact areas not accessible to rollers or compactors with mechanical hand tampers. Aerate material excessively moistened by rain to a satisfactory moisture content. Finish to a smooth surface by blading, rolling with a smooth roller, or both.

3.6.2 Structural Fill Material Placement

Provide for pavement embankments, under the Segregation Facilities buildings, Forklift Charging Station, equipment pads and under concrete slabs, except where select material is provided. Place in 8 inch horizontal lifts. A 12 to 18 inch bridge lift may be placed to over the clay subgrade soils to provide a solid working surface for successive lifts. Do not place over wet or frozen areas. Place backfill material adjacent to structures as the structural elements are completed and accepted. Backfill against concrete only when approved. Place and compact material to avoid loading upon or against the structure.

3.6.3 Select Material Placement

Provide under pavements as the subbase course and structures where indicated. Place in 8 inch horizontal lifts. A 12 to 18 inch bridge lift may be placed to over the clay subgrade soils to provide a solid working surface for successive lifts. Do not place over wet or frozen areas. Backfill adjacent to structures must be placed as structural elements are completed and accepted. Backfill against concrete only when approved. Place and compact material to avoid loading upon or against structure.

3.6.4 Structural Fill Material Placement Over Pipes and at Walls

Backfilling must not begin until construction below finish grade has been approved, underground utilities systems have been inspected, tested and approved, forms removed, and the excavation cleaned of trash and debris. Backfill must be brought to indicated finish grade. Where pipe is coated or wrapped for protection against corrosion, the backfill material up to an elevation 2 feet above sewer lines and 1 foot above other utility lines must be free from stones larger than 1 inch in any dimension. Heavy equipment for spreading and compacting backfill must not be operated closer to foundation or retaining walls than a distance equal to the height of backfill above the top of footing; the area remaining must be compacted in layers not more than 4 inches in compacted thickness with power-driven hand tampers suitable for the material being compacted. Backfill must be placed carefully around pipes or tanks to avoid damage to coatings, wrappings, or tanks. Backfill must not be placed against foundation walls prior to 7 days after completion of the walls. As far as practicable, backfill must be brought up evenly on each side of the wall and sloped to drain away from the wall.

3.6.5 Trench Backfill

Backfill trenches to the grade shown. Backfill as rapidly as construction, testing, and acceptance of work permits. Place and compact backfill under structures and paved areas in 6 inch lifts. Backfill the trench to 1 foot above the top of pipe prior to performing the required pressure tests. Leave the joints and couplings uncovered during the pressure test.

3.6.5.1 Replacement of Unyielding Material

Replace unyielding material removed from the bottom of the trench with satisfactory material or initial backfill material.

3.6.5.2 Replacement of Unstable Material

Replace unstable material removed from the bottom of the trench or excavation with satisfactory material placed in layers not exceeding 6 inches loose thickness.

3.6.5.3 Bedding and Initial Backfill

Provide bedding of the type and thickness shown. Place initial backfill material and compact it with approved tampers to a height of at least one foot above the utility pipe or conduit. Bring up the backfill evenly on both sides of the pipe for the full length of the pipe. Take care to ensure thorough compaction of the fill under the haunches of the pipe. Except where shown or when specified otherwise in the individual piping section, provide bedding for buried piping in accordance with PART 2 paragraph UTILITY BEDDING MATERIAL. Compact backfill to top of pipe to 95 percent of ASTM D698 maximum density. Provide plastic piping with bedding to spring line of pipe.

3.6.5.4 Final Backfill

Do not begin backfill until construction below finish grade has been approved, underground utilities systems have been inspected, tested and approved, forms removed, and the excavation cleaned of trash and debris. Bring backfill to indicated finish grade. Where pipe is coated or wrapped for protection against corrosion, the backfill material up to an elevation 2 feet above sewer lines and one foot above other utility lines need to be free from stones larger than one inch in any dimension. Heavy equipment for spreading and compacting backfill are not to be operated closer to foundation or retaining walls than a distance equal to the height of backfill above the top of footing; compact remaining area in layers not more than 4 inches in compacted thickness with power-driven hand tampers suitable for the material being compacted. Place backfill carefully around pipes or tanks to avoid damage to coatings, wrappings, or tanks. Do not place backfill against foundation walls prior to 7 days after completion of the walls. As far as practicable, bring backfill up evenly on each side of the wall and sloped to drain away from the wall.

Fill the remainder of the trench, except for special materials for buildings and pavements with satisfactory material. Place backfill material and compact as follows:

3.6.5.4.1 Buildings and Pavements

Place backfill up to the required elevation as specified. Do not permit water flooding or jetting methods of compaction. Compact as specified for Structural Fill.

3.6.5.4.2 Turfed or Seeded Areas and Miscellaneous Areas

Deposit subgrade backfill in layers of a maximum of 12 inches loose thickness, and compact it 90 percent maximum density. Do not permit compaction by water flooding or jetting. Apply this requirement to all other areas not specifically designated above. Prior to installation of

amended topsoil and seed, apply and mix in 1"-2" of compost/organic matter within top 4".

3.6.5.5 Electrical Distribution System

Provide a minimum cover of 24 inches from the finished grade to direct burial cable and conduit or duct line, unless otherwise indicated.

3.6.5.6 Displacement of Features

After other required tests have been performed and the trench backfill compacted to 1 foot above the top of the pipe, inspect the pipe to determine whether unexpected or damaging displacement has occurred. Conduct walk-through inspection of pipe sizes larger than 48 inches. Inspect pipes smaller than 48 inches using remote methods using closed circuit television, sonar, or hybrid that can provide a 360-degree inspection of the pipe. Prepare and submit a pipe inspection report consisting of digital video or photos. If, in the judgment of the Contracting Officer, the interior of the pipe shows poor alignment or any other defects that would cause improper functioning of the system, replace or repair the defects as directed at no additional cost to the Government.

3.6.5.7 Buried Tape And Detection Wire

3.6.5.7.1 Buried Warning and Identification Tape

Provide buried utility lines with utility identification tape. Bury tape 12 inches below finished grade; under pavements and slabs, bury tape 6 inches below top of subgrade.

3.6.5.7.2 Buried Detection Wire

Bury detection wire directly above non-metallic piping at a distance not to exceed 12 inches above the top of pipe. Extend the wire continuously and unbroken, from manhole to manhole. Terminate the ends of the wire inside the manholes at each end of the pipe, with a minimum of 3 feet of wire, coiled, remaining accessible in each manhole. Furnish insulated wire over its entire length. Install wires at manholes between the top of the corbel and the frame, and extend up through the chimney seal between the frame and the chimney seal. For force mains, terminate the wire in the valve pit at the pump station end of the pipe.

3.6.6 Structural Fill Placement

Place fill and backfill beneath and adjacent to structures in successive horizontal layers of loose material not more than 8 inches in depth, or in loose layers not more than 4 inches in depth when using hand-operated compaction equipment. Do not place over wet or frozen materials. Compact to 95 percent of laboratory maximum density, except as otherwise specified. Perform compaction in such a manner as to prevent wedging action or eccentric loading upon or other damage to the structure. Moisture condition fill and backfill material to within range of plus 2 or minus 2 percent of optimum moisture content at the time of compaction.

3.6.7 Backfill for Appurtenances

After the manhole, catchbasin, inlet, or similar structure has been constructed and the concrete has been allowed to cure for 7 days, place backfill in such a manner that the structure is not be damaged by the

shock of falling earth. Deposit the backfill material, compact it as specified for final backfill, and bring up the backfill evenly on all sides of the structure to prevent eccentric loading and excessive stress.

3.6.8 Flowable Fill

Place fill in a manner to completely fill voids in the location indicated. Do not place when atmospheric temperatures are expected to be below 33 degrees F at any time during the 3 day period following placement.

3.6.9 Compaction

3.6.9.1 Subgrade

Determine in-place density of existing subgrade; if required density exists, no compaction or testing of existing subgrade will be required, if the existing subgrade materials are found to be firm and stable during the proof rolling specified in paragraph 3.3.5 Proof Rolling or a visual inspection for the area within the load transfer platform. Subgrade materials that exhibit excessive deflection and/or rutting during proof rolling must be scarified, aerated, and re-compacted to specified density at +/- 2 percent of optimum moisture content prior to being considered for remedial action by the Contracting Officer.

3.6.9.2 Structures, Spread Footings, and Concrete Slabs

Compact top 12 inches of subgrades to 95 percent of ASTM D698. Compact fill and backfill material, magazine embankment fill and select material to 95 percent of ASTM D698.

3.6.9.3 General Site

Compact underneath areas designated for vegetation and areas outside the 5 foot line of the paved area or structure to 90 percent of ASTM D698.

3.6.9.4 Adjacent Areas

Compact areas within 5 feet of structures to 95 percent of ASTM D698.

3.6.9.5 Paved Areas

Compact top 12 inches of subgrades to 95 percent of ASTM D698. Compact fill and backfill materials and select material to 95 percent of ASTM D698.

3.7 FINISHING/FINISH OPERATIONS

During construction, keep embankments and excavations shaped and drained. Maintain ditches and drains along subgrade to drain effectively at all times. Do not disturb the finished subgrade by traffic or other operation. Protect and maintain the finished subgrade in a satisfactory condition until ballast, subbase, base, or pavement is placed. Do not permit the storage or stockpiling of materials on finished subgrade. Do not lay subbase, base course, ballast, or pavement until the subgrade has been checked and approved, and in no case place subbase, base, surfacing, pavement, or ballast on a muddy, spongy, frozen or otherwise unstable subgrade.

Finish the surface of excavations, embankments, and subgrades to a smooth and compact surface in accordance with the lines, grades, and cross

sections or elevations shown. Provide the degree of finish for graded areas within 0.1 foot of the grades and elevations indicated except as indicated for subgrades specified in paragraph SUBGRADE PREPARATION. Finish gutters and ditches in a manner that will result in effective drainage. Finish the surface of areas to be turfed to a smoothness suitable for the application of turfing materials. Repair graded, topsoiled, or backfilled areas prior to acceptance of the work, and re-established grades to the required elevations and slopes.

3.7.1 Grading Around Structures

Construct areas within 5 feet outside of each building and structure line true-to-grade, shape to drain, and maintain free of trash and debris until final inspection has been completed and the work has been accepted.

3.7.2 Grading

Finish grades as indicated within one-tenth of one foot. Grade areas to drain water away from structures. Maintain areas free of trash and debris. For existing grades that will remain but which were disturbed by Contractor's operations, grade as directed.

3.7.3 Amended Topsoil

Provide and install as specified in Section 32 92 19 SEEDING.

3.7.4 Protection of Surfaces

Protect newly backfilled, graded, and topsoiled areas from traffic, erosion, and settlements that may occur. Repair or reestablish damaged grades, elevations, or slopes.

3.8 DISPOSITION OF SURPLUS MATERIAL

Remove from Government property all surplus or other soil material not required or not suitable for filling or backfilling, along with brush, refuse, stumps, roots, and timber. Properly disposed of in accordance with all applicable laws and regulations. Prepare plan for Disposition of Surplus Materials to include permissions document to dispose of nonsalable products. Dispose of all material as specified in Section 01 57 19 Temporary Environmental Controls.

3.9 TESTING

Perform one of each of the following tests for each material used. Provide additional tests for each source change.

3.9.1 Fill and Backfill Material Testing

Test fill and backfill material and magazine embankment fill in accordance with ASTM C136/C136M for conformance to ASTM D2487 gradation limits; ASTM D1140 for material finer than the No. 200 sieve; ASTM D4318 for liquid limit and for plastic limit; ASTM D698 or ASTM D1557 for moisture density relations, as applicable. Tests must be performed for every 1,000 cubic yards of import material. All test reports must have been completed within 6 months of submission.

3.9.2 Select Material Testing

Test select material in accordance with ASTM C136/C136M for conformance to ASTM D2487 gradation limits; ASTM D1140 for material finer than the No. 200 sieve; ASTM D698 or ASTM D1557 for moisture density relations, as applicable. Tests must be performed for every 1,000 cubic yards of import material. All test reports must have been completed within 6 months of submission.

3.9.3 Density Tests

Test density in accordance with ASTM D1556/D1556M, or ASTM D6938. When ASTM D6938 density tests are used, verify density test results by performing an ASTM D1556/D1556M density test at a location already ASTM D6938 tested as specified herein. Perform an ASTM D1556/D1556M density test at the start of the job, and for every 10 ASTM D6938 density tests thereafter. Test each lift at randomly selected locations every 2000 square feet of existing grade in fills for structures and concrete slabs, and every 2500 square feet for other fill areas. Include density test results in daily report.

Bedding and backfill in trenches: One test per 50 linear feet in each lift.

3.9.4 Moisture Content Tests

Perform a minimum of two tests per day per type of material or source of materials being placed in accordance with ASTM D2216. Include moisture content test results in daily report.

-- End of Section --

THIS PAGE INTENTIONALLY LEFT BLANK

SECTION 32 16 19

CONCRETE CURBS, GUTTERS AND SIDEWALKS
05/18

PART 1 GENERAL

1.1 UNIT PRICES

1.1.1 Measurement

1.1.1.1 Sidewalks

The quantities of sidewalks to be paid for will be the number of square yards of each depth of sidewalk constructed as indicated.

1.1.1.2 Curbs and Gutters

The quantities of curbs and gutters to be paid for will be the number of linear feet of each cross section constructed as indicated, measured along the face of the curb at the gutter line.

1.1.2 Payment

1.1.2.1 Sidewalks

Payment of the quantities of sidewalks measured as specified will be at the Contract unit price per square yard of the thickness specified.

1.1.2.2 Curbs and Gutters

Payment of the quantities of curbs and gutters measured as specified will be at the Contract unit price per linear foot of each cross section.

1.2 REFERENCES

The publications listed below form a part of this specification to the extent referenced. The publications are referred to within the text by the basic designation only.

AMERICAN ASSOCIATION OF STATE HIGHWAY AND TRANSPORTATION OFFICIALS (AASHTO)

AASHTO M 182	(2005; R 2017) Standard Specification for Burlap Cloth Made from Jute or Kenaf and Cotton Mats

ASTM INTERNATIONAL (ASTM)

ASTM A615/A615M	(2024) Standard Specification for Deformed and Plain Carbon-Steel Bars for Concrete Reinforcement
ASTM A1064/A1064M	(2024) Standard Specification for Carbon-Steel Wire and Welded Wire Reinforcement, Plain and Deformed, for Concrete

ASTM C31/C31M	(2025b) Standard Practice for Making and Curing Concrete Test Specimens in the Field
ASTM C143/C143M	(2020) Standard Test Method for Slump of Hydraulic-Cement Concrete
ASTM C171	(2020) Standard Specification for Sheet Materials for Curing Concrete
ASTM C172/C172M	(2017) Standard Practice for Sampling Freshly Mixed Concrete
ASTM C173/C173M	(2024a) Standard Test Method for Air Content of Freshly Mixed Concrete by the Volumetric Method
ASTM C231/C231M	(2024) Standard Test Method for Air Content of Freshly Mixed Concrete by the Pressure Method
ASTM C309	(2019) Standard Specification for Liquid Membrane-Forming Compounds for Curing Concrete
ASTM C920	(2018; R 2024) Standard Specification for Elastomeric Joint Sealants
ASTM D1751	(2018) Standard Specification for Preformed Expansion Joint Filler for Concrete Paving and Structural Construction (Nonextruding and Resilient Bituminous Types)
ASTM D1752	(2018) Standard Specification for Preformed Sponge Rubber, Cork and Recycled PVC Expansion Joint Fillers for Concrete Paving and Structural Construction
ASTM D5893/D5893M	(2016) Standard Specification for Cold Applied, Single Component, Chemically Curing Silicone Joint Sealant for Portland Cement Concrete Pavements

INTERNATIONAL CODE COUNCIL (ICC)

ICC A117.1 COMM	(2017) Standard And Commentary Accessible and Usable Buildings and Facilities

1.3 SUBMITTALS

Government approval is required for submittals with a "G" classification. Submittals not having a "G" classification are for Contractor Quality Control approval. Submit the following in accordance with Section 01 33 00 SUBMITTAL PROCEDURES:

SD-03 Product Data

Concrete

SD-06 Test Reports

Field Quality Control

1.4 EQUIPMENT, TOOLS, AND MACHINES

1.4.1 General Requirements

Plant, equipment, machines, and tools used in the work will be subject to approval and must be maintained in a satisfactory working condition at all times. Use equipment capable of producing the required product, meeting grade controls, thickness control and smoothness requirements as specified. Discontinue using equipment that produces unsatisfactory results. Allow the Contracting Officer access at all times to the plant and equipment to ensure proper operation and compliance with specifications.

1.4.2 Slip Form Equipment

Slip form paver or curb forming machines, will be approved based on trial use on the job and must be self-propelled, automatically controlled, crawler mounted, and capable of spreading, consolidating, and shaping the plastic concrete to the desired cross section in one pass.

1.5 ENVIRONMENTAL REQUIREMENTS

1.5.1 Placing During Cold Weather

Do not place concrete when the air temperature reaches 40 degrees F and is falling, or is already below that point. Placement may begin when the air temperature reaches 35 degrees F and is rising, or is already above 40 degrees F. Make provisions to protect the concrete from freezing during the specified curing period. If necessary to place concrete when the temperature of the air, aggregates, or water is below 35 degrees F, placement and protection must be approved in writing. Approval will be contingent upon full conformance with the following provisions. Prepare and protect the underlying material so that it is entirely free of frost when the concrete is deposited. Heat mixing water and aggregates as necessary to result in the temperature of the in-place concrete being between 50 and 85 degrees F. Methods and equipment for heating must be approved. Use only aggregates that are free of ice, snow, and frozen lumps before entering the mixer. Provide covering or other means as needed to maintain the concrete at a temperature of at least 50 degrees F for not less than 72 hours after placing, and at a temperature above freezing for the remainder of the curing period.

1.5.2 Placing During Warm Weather

The temperature of the concrete as placed must not exceed 85 degrees F except where an approved retarder is used. Cool the mixing water and aggregates as necessary to maintain a satisfactory placing temperature. The placing temperature must not exceed 95 degrees F at any time.

PART 2 PRODUCTS

2.1 CONCRETE

Provide concrete conforming to the applicable requirements of Section

03 30 00 CAST-IN-PLACE CONCRETE except as otherwise specified. Concrete must have a minimum compressive strength of 3500 psi at 28 days. Size of aggregate must not exceed 1-1/2 inches. Submit copies of certified delivery tickets for all concrete used in the construction.

2.1.1 Air Content

Use concrete mixtures that have an air content by volume of concrete of 5 to 7 percent, based on measurements made immediately after discharge from the mixer.

2.1.2 Slump

Use concrete with a slump of 3 inches plus or minus 1 inch for hand placed concrete or 1 inch plus or minus 1/2 inch for slipformed concrete as determined in accordance with ASTM C143/C143M.

2.1.3 Reinforcement Steel

Use reinforcement bars conforming to ASTM A615/A615M. Use wire mesh reinforcement conforming to ASTM A1064/A1064M.

2.2 CONCRETE CURING MATERIALS

2.2.1 Impervious Sheet Materials

Use impervious sheet materials conforming to ASTM C171, type optional, except that polyethylene film, if used, must be white opaque.

2.2.2 Burlap

Use burlap conforming to AASHTO M 182.

2.2.3 White Pigmented Membrane-Forming Curing Compound

Use white pigmented membrane-forming curing compound conforming to ASTM C309, Type 2.

2.3 CONCRETE PROTECTION MATERIALS

Use concrete protection materials consisting of a linseed oil mixture of equal parts, by volume, of linseed oil and either mineral spirits, naphtha, or turpentine. At the option of the Contractor, commercially prepared linseed oil mixtures, formulated specifically for application to concrete to provide protection against the action of deicing chemicals may be used, except that emulsified mixtures are not acceptable.

2.4 JOINT FILLER STRIPS

2.4.1 Expansion Joint Filler, Premolded

Onless otherwise indicated, use 1/2 inch thick premolded expansion joint filler conforming to ASTM D1751 or ASTM D1752.

2.5 JOINT SEALANTS

Use cold-applied joint sealant conforming to ASTM C920 or ASTM D5893/D5893M.

2.6 FORM WORK

Design and construct form work to ensure that the finished concrete will conform accurately to the indicated dimensions, lines, and elevations, and within the tolerances specified. Use wood or steel forms that are straight and of sufficient strength to resist springing during depositing and consolidating concrete.

2.6.1 Sidewalk Forms

Use sidewalk forms that are of a height equal to the full depth of the finished sidewalk.

2.7 Detectable Warning System

Detectable Warning Systems shown on the Contract plans are to meet requirements of ICC A117.1 COMM - Section 705.

PART 3 EXECUTION

3.1 SUBGRADE PREPARATION

Construct subgrade to the specified grade and cross section prior to concrete placement.

3.1.1 Sidewalk Subgrade

Place and compact the subgrade in accordance with Section 31 00 00 EARTHWORK. Test the subgrade for grade and cross section with a template extending the full width of the sidewalk and supported between side forms.

3.1.2 Maintenance of Subgrade

Maintain subgrade in a smooth, compacted condition in conformity with the required section and established grade until the concrete is placed. The subgrade must be in a moist condition when concrete is placed. Prepare and protect subgrade so that it is free from frost when the concrete is deposited.

3.2 FORM SETTING

Set forms to the indicated alignment, grade and dimensions. Hold forms rigidly in place by a minimum of 3 stakes per form placed at intervals not to exceed 4 feet. Use additional stakes and braces at corners, deep sections, and radius bends, as required. Use clamps, spreaders, and braces where required to ensure rigidity in the forms. Remove forms in a manner that will not injure the concrete. Do not use bars or heavy tools against the concrete when removing the forms. Promptly and satisfactorily repair concrete found to be defective after form removal. Clean forms and coat with form oil or biodegradable form release agent each time before concrete is placed. Wood forms may, instead, be thoroughly wetted with water before concrete is placed, except that with probable freezing temperatures, oiling is mandatory.

3.2.1 Sidewalks

Set forms for sidewalks with the upper edge true to line and grade with an allowable tolerance of 1/8 inch in any 10 foot long section. After forms are set, grade and alignment must be checked with a 10 foot straightedge.

Sidewalks must have a transverse slope of 1/4 inch per foot Do not remove side forms less than 12 hours after finishing has been completed.

3.2.2 Curbs and Gutters

Remove forms used along the front of the curb not less than 2 hours nor more than 6 hours after the concrete has been placed. Do not remove forms used along the back of curb until the face and top of the curb have been finished, as specified for concrete finishing. Do not remove gutter forms while the concrete is sufficiently plastic to slump in any direction.

3.3 SIDEWALK CONCRETE PLACEMENT AND FINISHING

3.3.1 Formed Sidewalks

Place concrete in the forms in one layer. When consolidated and finished, the sidewalks must be of the thickness indicated. Use a strike-off guided by side forms after concrete has been placed in the forms to bring the surface to proper section to be compacted. Consolidate concrete by tamping and spading or with an approved vibrator. Finish the surface to grade with a strike off.

3.3.2 Concrete Finishing

After straightedging, when most of the water sheen has disappeared, and just before the concrete hardens, finish the surface with a wood or magnesium float or darby to a smooth and uniformly fine granular or sandy texture free of waves, irregularities, or tool marks. Produce a scored surface by brooming with a fiber-bristle brush in a direction transverse to that of the traffic, followed by edging.

3.3.3 Edge and Joint Finishing

Finish all slab edges, including those at formed joints, with an edger having a radius of 1/8 inch. Edge transverse joints before brooming. Eliminate the flat surface left by the surface face of the edger with brooming. Clean and solidly fill corners and edges which have crumbled and areas which lack sufficient mortar for proper finishing with a properly proportioned mortar mixture and then finish.

3.3.4 Surface and Thickness Tolerances

Finished surfaces must not vary more than 5/16 inch from the testing edge of a 10-foot straightedge. Permissible deficiency in section thickness will be up to 1/4 inch.

3.4 SIDEWALK JOINTS

Construct sidewalk joints to divide the surface into rectangular areas. Space transverse contraction joints at a distance equal to the sidewalk width or 5 feet on centers, whichever is less, and continuous across the slab. Construct longitudinal contraction joints along the centerline of all sidewalks 10 feet or more in width. Construct transverse expansion joints at sidewalk returns and opposite expansion joints in adjoining curbs. Where the sidewalk is not in contact with the curb, install transverse expansion joints as indicated. Form expansion joints around structures and features which project through or into the sidewalk pavement, using joint filler of the type, thickness, and width indicated. Expansion joints are not required between sidewalks and curb that abut the

sidewalk longitudinally.

3.4.1 Sidewalk Contraction Joints

Form contraction joints in the fresh concrete by cutting a groove in the top portion of the slab to a depth of at least one-fourth of the sidewalk slab thickness. Unless otherwise approved or indicated, either use a jointer to cut the groove or saw a groove in the hardened concrete with a power-driven saw. Construct sawed joints by sawing a groove in the concrete with a 1/8 inch blade. Provide an ample supply of saw blades on the jobsite before concrete placement is started. Provide at least one standby sawing unit in good working order at the jobsite at all times during the sawing operations.

3.4.2 Sidewalk Expansion Joints

Form expansion joints using 1/2 inch joint filler strips. Joint filler in expansion joints surrounding structures and features within the sidewalk may consist of preformed filler material conforming to ASTM D1752 or building paper. Hold joint filler in place with steel pins or other devices to prevent warping of the filler during floating and finishing. Immediately after finishing operations are completed, round joint edges using an edging tool having a radius of 1/8 inch. Remove any concrete over the joint filler. At the end of the curing period, clean the top of expansion joints and fill with cold-applied joint sealant. Use joint sealant that is gray or stone in color. Thoroughly clean the joint opening before the sealing material is placed. Do not spill sealing material on exposed surfaces of the concrete. Apply joint sealing material only when the concrete at the joint is surface dry and atmospheric and concrete temperatures are above 50 degrees F. Immediately remove any excess material on exposed surfaces of the concrete and clean the concrete surfaces.

3.4.3 Reinforcement Steel Placement

Accurately and securely fasten reinforcement steel in place with suitable supports and ties before the concrete is placed.

3.5 CURING AND PROTECTION

3.5.1 General Requirements

Protect concrete against loss of moisture and rapid temperature changes for at least 7 days from the beginning of the curing operation. Protect unhardened concrete from rain and flowing water. All equipment needed for adequate curing and protection of the concrete must be on hand and ready for use before actual concrete placement begins. Protect concrete as necessary to prevent cracking of the pavement due to temperature changes during the curing period.

3.5.1.1 Mat Method

Cover the entire exposed surface with two or more layers of burlap. Overlap mats at least 6 inches. Thoroughly wet the mat with water prior to placing on concrete surface and keep the mat continuously in a saturated condition and in intimate contact with concrete for not less than 7 days.

3.5.1.2 Impervious Sheeting Method

Wet the entire exposed surface with a fine spray of water and then cover with impervious sheeting material. Lay sheets directly on the concrete surface with the light-colored side up and overlapped 12 inches when a continuous sheet is not used. Use sheeting that is not less than 18-inches wider than the concrete surface to be cured. Secure sheeting using heavy wood planks or a bank of moist earth placed along edges and laps in the sheets. Satisfactorily repair or replace sheets that are torn or otherwise damaged during curing. Sheeting must remain on the concrete surface to be cured for not less than 7 days.

3.5.1.3 Membrane Curing Method

Apply a uniform coating of white-pigmented membrane-curing compound to the entire exposed surface of the concrete as soon after finishing as the free water has disappeared from the finished surface. Coat formed surfaces immediately after the forms are removed and in no case longer than 1 hour after the removal of forms. Do not allow concrete surface to dry before application of the membrane. If drying has occurred, moisten the surface of the concrete with a fine spray of water and apply the curing compound as soon as the free water disappears. Apply curing compound in two coats by hand-operated pressure sprayers at a coverage of approximately 200 square feet/gallon for the total of both coats. Apply the second coat in a direction approximately at right angles to the direction of application of the first coat. The compound must form a uniform, continuous, coherent film that will not check, crack, or peel and must be free from pinholes or other imperfections. If pinholes, abrasion, or other discontinuities exist, apply an additional coat to the affected areas within 30 minutes. Respray concrete surfaces that are subjected to heavy rainfall within 3 hours after the curing compound has been applied by the method and at the coverage specified above. Respray areas where the curing compound is damaged by subsequent construction operations within the curing period. Take precautions necessary to ensure that the concrete is properly cured at sawed joints, and that no curing compound enters the joints. Tightly seal the top of the joint opening and the joint groove at exposed edges before the concrete in the region of the joint is resprayed with curing compound. Use a method used for sealing the joint groove that prevents loss of moisture from the joint during the entire specified curing period. Provide approved standby facilities for curing concrete pavement at a location accessible to the jobsite for use in the event of mechanical failure of the spraying equipment or other conditions that might prevent correct application of the membrane-curing compound at the proper time. Adequately protect concrete surfaces to which membrane-curing compounds have been applied during the entire curing period from pedestrian and vehicular traffic, except as required for joint-sawing operations and surface tests, and from other possible damage to the continuity of the membrane.

3.5.2 Backfilling

After curing, remove debris and backfill, grade, and compact the area adjoining the concrete to conform to the surrounding area in accordance with lines and grades indicated.

3.5.3 Protection

Protect completed concrete from damage until accepted. Repair damaged concrete and clean concrete discolored during construction. Remove and

reconstruct concrete that is damaged for the entire length between regularly scheduled joints. Refinishing the damaged portion will not be acceptable. Dispose of removed material as directed.

3.5.4 Protective Coating

Apply a protective coating of linseed oil mixture to the exposed-to-view concrete surface after the curing period, if concrete will be exposed to de-icing chemicals within 6 weeks after placement. Moist cure concrete to receive a protective coating.

3.5.4.1 Application

Complete curing and backfilling operation prior to applying two coats of protective coating. Concrete must be surface dry and clean before each application. Spray apply at a rate of not more than 50 square yards/gallon for first application and not more than 70 square yards/gallon for second application, except that the number of applications and coverage for each application for commercially prepared mixture must be in accordance with the manufacturer's instructions. Protect coated surfaces from vehicular and pedestrian traffic until dry.

3.5.4.2 Precautions

Do not heat protective coating by direct application of flame or electrical heaters and protect the coating from exposure to open flame, sparks, and fire adjacent to open containers or applicators. Do not apply material at ambient or material temperatures lower than 50 degrees F.

3.6 FIELD QUALITY CONTROL

Submit copies of all test reports within 24 hours of completion of the test.

3.6.1 General Requirements

Perform the inspection and tests described and meet the specified requirements for inspection details and frequency of testing. Based upon the results of these inspections and tests, take the action and submit reports as required below, and additional tests to ensure that the requirements of these specifications are met.

3.6.2 Concrete Testing

3.6.2.1 Strength Testing

Take concrete samples in accordance with ASTM C172/C172M not less than once a day nor less than once for every 250 cubic yards of concrete placed. Mold cylinders in accordance with ASTM C31/C31M for strength testing by an approved laboratory. Each strength test result must be the average of 2 test cylinders from the same concrete sample tested at 28 days, unless otherwise specified or approved. Concrete specified on the basis of compressive strength will be considered satisfactory if the averages of all sets of three consecutive strength test results equal or exceed the specified strength, and no individual strength test result falls below the specified strength by more than 500 psi.

3.6.2.2 Air Content

Determine air content in accordance with ASTM C173/C173M or ASTM C231/C231M. Use ASTM C231/C231M with concretes and mortars made with relatively dense natural aggregates. Make two tests for air content on randomly selected batches of each class of concrete placed during each shift. Make additional tests when excessive variation in concrete workability is reported by the placing foreman or the Government inspector. Notify the placing foreman if results are out of tolerance. The placing foreman must take appropriate action to have the air content corrected at the plant. Additional tests for air content will be performed on each truckload of material until such time as the air content is within the tolerance specified.

3.6.2.3 Slump Test

Perform two slump tests on randomly selected batches of each class of concrete for every 250 cubic yards, or fraction thereof, of concrete placed during each shift. Perform additional tests when excessive variation in the workability of the concrete is noted or when excessive crumbling or slumping is noted along the edges of slip-formed concrete.

3.6.3 Thickness Evaluation

Determine the anticipated thickness of the concrete prior to placement by passing a template through the formed section or by measuring the depth of opening of the extrusion template of the curb forming machine. If a slip form paver is used for sidewalk placement, construct the subgrade true to grade prior to concrete placement. The thickness will be determined by measuring each edge of the completed slab.

3.6.4 Surface Evaluation

Provide finished surfaces for each category of the completed work that are uniform in color and free of blemishes and form or tool marks.

3.7 SURFACE DEFICIENCIES AND CORRECTIONS

3.7.1 Thickness Deficiency

When measurements indicate that the completed concrete section is deficient in thickness by more than 1/4 inch the deficient section will be removed, between regularly scheduled joints, and replaced.

3.7.2 High Areas

In areas not meeting surface smoothness and plan grade requirements, reduce high areas either by rubbing the freshly finished concrete with carborundum brick and water when the concrete is less than 36 hours old or by grinding the hardened concrete with an approved surface grinding machine after the concrete is 36 hours old or more. The area corrected by grinding the surface of the hardened concrete must not exceed 5 percent of the area of any integral slab, and the depth of grinding must not exceed 1/4 inch. Remove and replace pavement areas requiring grade or surface smoothness corrections in excess of the limits specified.

3.7.3 Appearance

Exposed surfaces of the finished work will be inspected by the Contracting

Officer and deficiencies in appearance will be identified. Remove and replace areas which exhibit excessive cracking, discoloration, form marks, or tool marks or which are otherwise inconsistent with the overall appearances of the work.

3.8 DETECTABLE WARNING SYSTEM

Install Detectable Warning Systems required by Contract plans in accordance with ICC A117.1 COMM, Section 705, and by manufacturers' installation instructions.

-- End of Section --

THIS PAGE INTENTIONALLY LEFT BLANK

SECTION 32 92 23

SODDING
04/06, CHG 1: 08/21

PART 1 GENERAL

1.1 REFERENCES

The publications listed below form a part of this specification to the extent referenced. The publications are referred to within the text by the basic designation only.

ASTM INTERNATIONAL (ASTM)

ASTM C602	(2023) Agricultural Liming Materials
ASTM D4427	(2018) Standard Classification of Peat Samples by Laboratory Testing
ASTM D4972	(2018) Standard Test Methods for pH of Soils

TURFGRASS PRODUCERS INTERNATIONAL (TPI)

TPI GSS	(1995) Guideline Specifications to Turfgrass Sodding

U.S. DEPARTMENT OF AGRICULTURE (USDA)

DOA SSIR 42	(2022) Kellogg Soil Survey Laboratory Methods Manual, Soil Survey Investigations Report, No. 42, Version 6.0

1.2 DEFINITIONS

1.2.1 Stand of Turf

100 percent ground cover of the established species.

1.3 RELATED REQUIREMENTS

Section 31 00 00 EARTHWORK, Section 32 92 19 SEEDING applies to this section for pesticide use and plant establishment requirements, with additions and modifications herein.

1.4 SUBMITTALS

Government approval is required for submittals with a "G" classification. Submittals not having a "G" classification are for Contractor Quality Control approval. Submit the following in accordance with Section 01 33 00 SUBMITTAL PROCEDURES:

SD-03 Product Data

Fertilizer

Include physical characteristics, and recommendations.

SD-06 Test Reports

Topsoil composition tests (reports and recommendations).

SD-07 Certificates

Sod farm certification for sods. Indicate type of sod in accordance with TPI GSS.

1.5 DELIVERY, STORAGE, AND HANDLING

1.5.1 Delivery

1.5.1.1 Sod Protection

Protect from drying out and from contamination during delivery, on-site storage, and handling.

1.5.1.2 Fertilizer Delivery

Deliver to the site in original, unopened containers bearing manufacturer's chemical analysis, name, trade name, trademark, and indication of conformance to state and federal laws. Instead of containers, fertilizer may be furnished in bulk with certificate indicating the above information.

1.5.2 Storage

1.5.2.1 Sod Storage

Lightly sprinkle with water, cover with moist burlap, straw, or other approved covering; and protect from exposure to wind and direct sunlight until planted. Provide covering that will allow air to circulate so that internal heat will not develop. Do not store sod longer than 24 hours. Do not store directly on concrete or bituminous surfaces.

1.5.2.2 Topsoil

Prior to stockpiling topsoil, treat growing vegetation with application of appropriate specified non-selective herbicide. Clear and grub existing vegetation three to four weeks prior to stockpiling topsoil.

1.5.2.3 Handling

Do not drop or dump materials from vehicles.

1.6 TIME RESTRICTIONS AND PLANTING CONDITIONS

1.6.1 Restrictions

Do not plant when the ground is frozen, snow covered, muddy, or when air temperature exceeds 90 degrees Fahrenheit.

1.7 TIME LIMITATIONS

1.7.1 Sod

Place sod a maximum of thirty six hours after initial harvesting, in

accordance with TPI GSS as modified herein.

PART 2 PRODUCTS

2.1 SODS

2.1.1 Classification

Nursery grown, certified as classified in the TPI GSS. Machine cut sod at a uniform thickness of 3/4 inch within a tolerance of 1/4 inch, excluding top growth and thatch. Each individual sod piece must be strong enough to support its own weight when lifted by the ends. Broken pads, irregularly shaped pieces, and torn or uneven ends will be rejected.

2.1.2 Purity

Sod species must be genetically pure, free of weeds, pests, and disease.

2.1.3 Composition

2.1.3.1 Proportion

Proportion grass species as follows.

Botanical Name	Common Name	Percent
Cynodon Spp.	Tifway Bermuda Grass	100 percent

2.2 TOPSOIL

2.2.1 On-Site Topsoil

Surface soil stripped and stockpiled on site and modified as necessary to meet the requirements specified for topsoil in paragraph COMPOSITION. When available topsoil shall be existing surface soil stripped and stockpiled on-site in accordance with Section 31 00 00 EARTHWORK.

2.2.2 Off-Site Topsoil

Conform to requirements specified in paragraph COMPOSITION. Additional topsoil must be furnished by the Contractor if on-site topsoil cannot meet project specifications.

2.2.3 Composition

Containing from 5 to 10 percent organic matter as determined by the topsoil composition tests of the Organic Carbon, 6A, Chemical Analysis Method described in DOA SSIR 42. Maximum particle size, 3/4 inch, with maximum 3 percent retained on 1/4 inch screen. The pH must be tested in accordance with ASTM D4972. Topsoil must be free of sticks, stones, roots, and other debris and objectionable materials. Other components must conform to the following limits:

Silt	25-50 percent

Clay	10-30 percent
Sand	20-35 percent
pH	5.5 to 7.0
Soluble Salts	600 ppm maximum

2.3 SOIL CONDITIONERS

Add conditioners to topsoil as required to bring into compliance with "composition" standard for topsoil as specified herein.

2.3.1 Lime

Commercial grade hydrate or burnt limestone containing a calcium carbonate equivalent (C.C.E.) as specified in ASTM C602 of not less than 80 percent.

2.3.2 Aluminum Sulfate

Commercial grade.

2.3.3 Sulfur

100 percent elemental

2.3.4 Iron

100 percent elemental

2.3.5 Peat

Natural product of peat moss derived from a freshwater site and conforming to ASTM D4427. Shred and granulate peat to pass a 1/2 inch mesh screen and condition in storage pile for minimum 6 months after excavation.

2.3.6 Sand

Clean and free of materials harmful to plants.

2.3.7 Perlite

Horticultural grade.

2.3.8 Composted Derivatives

Ground bark, nitrolized sawdust, humus or other green wood waste material free of stones, sticks, and soil stabilized with nitrogen and having the following properties:

2.3.8.1 Particle Size

Minimum percent by weight passing:

No. 4 mesh screen	95
No. 8 mesh screen	80

2.3.8.2 Nitrogen Content

Minimum percent based on dry weight:

Fir Sawdust	0.7
Fir or Pine Bark	1.0

2.3.9 Gypsum

Coarsely ground gypsum comprised of calcium sulfate dihydrate 91 percent, calcium 22 percent, sulfur 17 percent; minimum 96 percent passing through 20 mesh screen, 100 percent passing thru 16 mesh screen.

2.3.10 Calcined Clay

Calcined clay must be granular particles produced from montmorillonite clay calcined to a minimum temperature of 1200 degrees F. Gradation: A minimum 90 percent must pass a No. 8 sieve; a minimum 99 percent must be retained on a No. 60 sieve; and a maximum 2 percent must pass a No. 100 sieve. Bulk density: A maximum 40 pounds per cubic foot.

2.4 FERTILIZER

2.4.1 Granular Fertilizer

Organic, granular controlled release fertilizer containing the following minimum percentages, by weight, of plant food nutrients:

10 percent available nitrogen
10 percent available phosphorus
10 percent available potassium

2.5 WATER

Source of water must be approved by Contracting Officer and of suitable quality for irrigation containing no element toxic to plant life.

PART 3 EXECUTION

3.1 PREPARATION

3.1.1 Extent Of Work

Provide soil preparation (including soil conditioners), fertilizing, and sodding of all newly graded finished earth surfaces, unless indicated otherwise, and at all areas inside or outside the limits of construction that are disturbed by the Contractor's operations.

3.1.2 Soil Preparation

Provide 4 inches of on-site topsoil to meet indicated finish grade. After areas have been brought to indicated finish grade, incorporate fertilizer pH adjusters, and soil conditioners into soil a minimum depth of 4 inches by disking, harrowing, tilling or other method approved by the Contracting Officer. Remove debris and stones larger than 3/4 inch in any dimension remaining on the surface after finish grading. Correct irregularities in finish surfaces to eliminate depressions. Protect finished topsoil areas from damage by vehicular or pedestrian traffic.

3.1.2.1 Soil Conditioner Application Rates

Apply soil conditioners at rates as determined by laboratory soil analysis of the soils at the job site.

3.1.2.2 Fertilizer Application Rates

Apply fertilizer at rates as determined by laboratory soil analysis of the soils at the job site.

3.2 SODDING

3.2.1 Finished Grade and Topsoil

Prior to the commencement of the sodding operation, the Contractor must verify that finished grades are as indicated on drawings; the placing of topsoil, smooth grading, and compaction requirements have been completed in accordance with Section 31 00 00 EARTHWORK.

The prepared surface must be a maximum 1 inch below the adjoining grade of any surfaced area. New surfaces must be blended to existing areas. The prepared surface must be completed with a light raking to remove from the surface debris and stones over a minimum 5/8 inch in any dimension.

3.2.2 Placing

Place sod a maximum of 36 hours after initial harvesting, in accordance with TPI GSS as modified herein.

3.2.3 Sodding Slopes and Ditches

For slopes 2:1 and greater, lay sod with long edge perpendicular to the contour. For V-ditches and flat bottomed ditches, lay sod with long edge perpendicular to flow of water. Anchor each piece of sod with wood pegs or wire staples maximum 2 feet on center. On slope areas, start sodding at bottom of the slope.

3.2.4 Finishing

After completing sodding, blend edges of sodded area smoothly into surrounding area. Air pockets must be eliminated and a true and even surface must be provided. Frayed edges must be trimmed and holes and missing corners must be patched with sod.

3.2.5 Rolling

Immediately after sodding, firm entire area except for slopes in excess of 3 to 1 with a roller not exceeding 90 pounds for each foot of roller width.

3.2.6 Watering

Start watering areas sodded as required by daily temperature and wind conditions. Apply water at a rate sufficient to ensure thorough wetting of soil to minimum depth of 4 inches. Run-off, puddling, and wilting must be prevented. Unless otherwise directed, watering trucks must not be driven over turf areas. Watering of other adjacent areas or plant material must be prevented.

3.3 PROTECTION OF TURF AREAS

Immediately after turfing, protect area against traffic and other use.

3.4 RESTORATION

Restore to original condition existing turf areas which have been damaged during turf installation operations. Keep clean at all times at least one paved pedestrian access route and one paved vehicular access route to each building. Clean other paving when work in adjacent areas is complete.

-- End of Section --

THIS PAGE INTENTIONALLY LEFT BLANK

SECTION 33 71 02

UNDERGROUND ELECTRICAL DISTRIBUTION
02/26

PART 1 GENERAL

1.1 REFERENCES

The publications listed below form a part of this specification to the extent referenced. The publications are referred to within the text by the basic designation only.

ASSOCIATION OF EDISON ILLUMINATING COMPANIES (AEIC)

AEIC CS8	(2013) Specification for Extruded Dielectric Shielded Power Cables Rated 5 Through 46 kV

ASTM INTERNATIONAL (ASTM)

ASTM B1	(2013) Standard Specification for Hard-Drawn Copper Wire
ASTM B3	(2013; R 2024) Standard Specification for Soft or Annealed Copper Wire
ASTM B8	(2023) Standard Specification for Concentric-Lay-Stranded Copper Conductors, Hard, Medium-Hard, or Soft
ASTM B496	(2016; R 2021) Standard Specification for Compact Round Concentric-Lay-Stranded Copper Conductors
ASTM F512	(2019; R 2024) Standard Specification for Smooth-Wall Poly (Vinyl Chloride) (PVC) Conduit and Fittings for Underground Installation

INSTITUTE OF ELECTRICAL AND ELECTRONICS ENGINEERS (IEEE)

IEEE 48	(2020) Test Procedures and Requirements for Alternating-Current Cable Terminations Used on Shielded Cables Having Laminated Insulation Rated 2.5 kV through 765 kV or Extruded Insulation Rated 2.5 kV through 500 kV
IEEE 81	(2025) IEEE Guide for Measuring Earth Resistivity, Ground Impedance, and Earth
IEEE 386	(2016) Separable Insulated Connector Systems for Power Distribution Systems Rated 2.5 kV through 35 kV
IEEE 400.2	(2024) Guide for Field Testing of Shielded

	Power Cable Systems Using Very Low Frequency (VLF)
IEEE 404	(2012) Standard for Extruded and Laminated Dielectric Shielded Cable Joints Rated 2500 V to 500,000 V
IEEE C2	(2023) National Electrical Safety Code
IEEE C37.20.3	(2013) Standard for Metal-Enclosed Interrupter Switchgear
IEEE Stds Dictionary	(2009) IEEE Standards Dictionary: Glossary of Terms & Definitions

INSULATED CABLE ENGINEERS ASSOCIATION (ICEA)

ICEA S-94-649	(2021) Concentric Neutral Cables Rated 5 Through 46 KV

INTERNATIONAL ELECTRICAL TESTING ASSOCIATION (NETA)

NETA ATS	(2025) Standard for Acceptance Testing Specifications for Electrical Power Equipment and Systems

NATIONAL ELECTRICAL MANUFACTURERS ASSOCIATION (NEMA)

ANSI/NEMA WC 71/ICEA S-96-659	(2014; R 2022) Standard for Nonshielded Cables Rated 2001-5000 Volts for use in the Distribution of Electric Energy
NEMA TC 6 & 8	(2020) Standard for Polyvinyl Chloride (PVC) Plastic Utilities Duct for Underground Installations
NEMA TC 9	(2020) Standard for Fittings for Polyvinyl Chloride (PVC) Plastic Utilities Duct for Underground Installation
NEMA WC 74/ICEA S-93-639	(2022) 5-46 kV Shielded Power Cable for Use in the Transmission and Distribution of Electric Energy

NATIONAL FIRE PROTECTION ASSOCIATION (NFPA)

NFPA 70	(2026; TIA 26-1; ERTA 26-1; TIA 26-2; TIA 26-3; TIA 26-4; TIA 26-5; TIA 26-6; TIA 26-7; ERTA 26-2; ERTA 26-3) National Electrical Code

UL SOLUTIONS (UL)

UL 94	(2023; Reprint Jan 2024) UL Standard for Safety Tests for Flammability of Plastic Materials for Parts in Devices and Appliances
UL 467	(2022) UL Standard for Safety Grounding

	and Bonding Equipment
UL 510	(2020; Dec 2022) UL Standard for Safety Polyvinyl Chloride, Polyethylene and Rubber Insulating Tape
UL 514B	(2012; Reprint Mar 2024) UL Standard for Safety Conduit, Tubing and Cable Fittings
UL 651	(2011; Reprint Jan 2026) UL Standard for Safety Schedule 40, 80, Type EB and A Rigid PVC Conduit and Fittings
UL 1072	(2006; Reprint Oct 2024) Medium-Voltage Power Cables

1.2 RELATED REQUIREMENTS

Section 26 08 00 APPARATUS INSPECTION AND TESTING applies to this section, with the additions and modifications specified herein.

1.3 DEFINITIONS

a. Unless otherwise specified or indicated, electrical and electronics terms used in these specifications, and on the drawings, are as defined in IEEE Stds Dictionary.

b. In the text of this section, the words conduit and duct are used interchangeably and have the same meaning.

c. In the text of this section, "medium voltage cable splices," and "medium voltage cable joints" are used interchangeably and have the same meaning.

1.4 SUBMITTALS

Government approval is required for submittals with a "G" classification. Submittals not having a "G" classification are for Contractor Quality Control approval. Submit the following in accordance with Section 01 33 00 SUBMITTAL PROCEDURES:

SD-02 Shop Drawings

SD-03 Product Data

Medium Voltage Cable; G

Medium Voltage Cable Joints; G

Medium Voltage Cable Terminations; G

Live End Caps; G

SD-06 Test Reports

Medium Voltage Cable Qualification and Production Tests; G

Field Acceptance Checks and Tests; G

Arc-proofing Test for cable fireproofing tape; G

Cable Installation Plan and Procedure; G

SD-07 Certificates

Cable splicer/terminator; G

Cable Installer Qualifications; G

1.5 QUALITY ASSURANCE

1.5.1 Certificate of Competency for Cable Splicer/Terminator

The cable splicer/terminator must have a certification from the National Cable Splicing Certification Board (NCSCB) in the field of splicing and terminating shielded medium voltage (5 kV to 35 kV) power cable using pre-manufactured kits (pre-molded, heat-shrink, cold shrink). Submit "Proof of Certification" for approval, for the individuals that will be performing cable splicer and termination work, 30 days before splices or terminations are to be made.

1.5.2 Cable Installer Qualifications

Provide at least one onsite person in a supervisory position with a documentable level of competency and experience to supervise all cable pulling operations. Provide a resume showing the cable installers' experience in the last three years, including a list of references complete with points of contact, addresses and telephone numbers. Cable installer must demonstrate experience with a minimum of three medium voltage cable installations. The Contracting Officer reserves the right to require additional proof of competency or to reject the individual and call for an alternate qualified cable installer.

1.5.3 Regulatory Requirements

In each of the publications referred to herein, consider the advisory provisions to be mandatory, as though the word, "must" had been substituted for "should" wherever it appears. Interpret references in these publications to the "authority having jurisdiction," or words of similar meaning, to mean the Contracting Officer. Equipment, materials, installation, and workmanship must be in accordance with the mandatory and advisory provisions of IEEE C2 and NFPA 70 unless more stringent requirements are specified or indicated.

1.5.4 Standard Products

Provide materials and equipment that are products of manufacturers regularly engaged in the production of such products which are of equal material, design and workmanship. Products must have been in satisfactory commercial or industrial use for 2 years prior to bid opening. The 2-year period must include applications of equipment and materials under similar circumstances and of similar size. The product must have been for sale on the commercial market through advertisements, manufacturers' catalogs, or brochures during the 2-year period. Where two or more items of the same class of equipment are required, these items must be products of a single manufacturer; however, the component parts of the item need not be the products of the same manufacturer unless stated in this section.

1.5.4.1 Alternative Qualifications

Products having less than a 2-year field service record will be acceptable if a certified record of satisfactory field operation for not less than 6000 hours, exclusive of the manufacturers' factory or laboratory tests, is furnished.

1.5.4.2 Material and Equipment Manufacturing Date

Products manufactured more than 3 years prior to date of delivery to site are not acceptable, unless specified otherwise.

PART 2 PRODUCTS

2.1 CONDUIT, DUCTS, AND FITTINGS

2.1.1 Plastic Duct for Concrete Encasement

Provide Type EB-20 in accordance with UL 651, ASTM F512, and NEMA TC 6 & 8, as indicated.

2.1.2 Duct Sealant

UL 94, Class HBF. Provide high-expansion urethane foam duct sealant that expands and hardens to form a closed, chemically and water resistant, rigid structure. Sealant must be compatible with common cable and wire jackets and capable of adhering to metals, plastics and concrete. Sealant must be capable of curing in temperature ranges of 35 degrees F to 95 degrees F. Cured sealant must withstand temperature ranges of -20 degrees F to 200 degrees F without loss of function.

2.1.3 Fittings

2.1.3.1 PVC Conduit Fittings

UL 514B, UL 651.

2.1.3.2 PVC Duct Fittings

NEMA TC 9.

2.2 MEDIUM VOLTAGE CABLE

Cable (conductor) sizes are designated by American Wire Gauge (AWG) and Thousand Circular Mils (Kcmil). Conductor and conduit sizes indicated are for copper conductors unless otherwise noted. Insulated conductors must have the date of manufacture and other identification imprinted on the outer surface of each cable at regular intervals throughout cable length. Wires and cables manufactured more than 24 months prior to date of delivery to the site are not acceptable. Provide single conductor type cables unless otherwise indicated.

2.2.1 Cable Configuration

Provide Type MV cable, conforming to NEMA WC 74/ICEA S-93-639 and UL 1072. Provide cables manufactured for use in duct applications as indicated. Cable must be rated 15 kVas indicated with 133 percent insulation level.

2.2.2 Conductor Material

Provide concentric-lay-stranded, Class B compact round conductors. Provide soft drawn copper cables complying with ASTM B3 and ASTM B8 for regular concentric and compressed stranding or ASTM B496 for compact stranding.

2.2.3 Insulation

Provide ethylene-propylene-rubber (EPR) insulation conforming to the requirements of ANSI/NEMA WC 71/ICEA S-96-659 and ICEA S-94-649.

2.2.4 Shielding

Cables rated for 2 kV and above must have a semiconducting conductor shield, a semiconducting insulation shield, and an overall copper tape shield for each phase.

2.2.5 Neutrals

Neutral conductors must be copper, employing the same insulation and jacket materials as phase conductors, except that a 600-volt insulation rating is acceptable.

2.2.6 Jackets

Provide cables with a PVC jacket. Provide PVC jackets with a separator that prevents contact with underlying semiconducting insulating shield.

2.3 MEDIUM VOLTAGE CABLE TERMINATIONS

IEEE 48 Class 1; of the molded elastomer, prestretched elastomer, or heat-shrinkable elastomer. Acceptable elastomers are track-resistant silicone rubber or track-resistant ethylene propylene compounds, such as ethylene propylene rubber or ethylene propylene diene monomer. Separable insulated connectors may be used for apparatus terminations, when such apparatus is provided with suitable bushings. Provide terminations, where required, with mounting brackets suitable for the intended installation and with grounding provisions for the cable shielding, metallic sheath, or armor. Provide terminations in a kit, including: skirts, stress control terminator, ground clamp, connectors, lugs, and complete instructions for assembly and installation. Terminations must be the product of one manufacturer, suitable for the type, diameter, insulation class and level, and materials of the cable terminated. Do not use separate parts of copper or copper alloy in contact with aluminum alloy parts in the construction or installation of the terminator.

2.3.1 Cold-Shrink Type

Terminator must be a one-piece design, utilizing the manufacturer's latest technology, where high-dielectric constant (capacitive) stress control is integrated within a skirted insulator made of silicone rubber. Termination must not require heat or flame for installation. Termination kit must contain all necessary materials (except for the lugs). Design termination for installation in low or highly contaminated indoor and outdoor locations and must resist ultraviolet rays and oxidative decomposition.

2.3.2 Heat Shrinkable Type

Terminator must consist of a uniform cross section heat shrinkable polymeric construction stress relief tubing and environmentally sealed outer covering that is nontracking, resists heavy atmospheric contaminants, ultra violet rays and oxidative decomposition. Provide heat shrinkable sheds or skirts of the same material. Design termination for installation in low or highly contaminated indoor or outdoor locations.

2.3.3 Separable Insulated Connector Type

IEEE 386. Provide connector with steel reinforced hook-stick eye, grounding eye, test point, and arc-quenching contact material. Provide connectors of the deadbreak type as indicated, of suitable construction for the application and the type of cable connected, and that include cable shield adaptors. Provide external clamping points and test points. Do no use separable connectors in manholes/handholes.

a. 600 Ampere deadbreak connector ratings: Voltage: 15 kV, 95 kV BIL. Short time rating: 25,000 rms symmetrical amperes. Connectors must have 200 ampere bushing interface for surge arresters as indicated.

2.4 MEDIUM VOLTAGE CABLE JOINTS

Provide joints (splices) in accordance with IEEE 404 suitable for the rated voltage, insulation level, insulation type, and construction of the cable. Joints must be certified by the manufacturer for waterproof, submersible applications. Upon request, supply manufacturer's design qualification test report in accordance with IEEE 404. Connectors for joint must be tin-plated electrolytic copper, having ends tapered and having center stops to equalize cable insertion.

2.4.1 Heat-Shrinkable Joint

Consists of a uniform cross-section heat-shrinkable polymeric construction with a linear stress relief system, a high dielectric strength insulating material, and an integrally bonded outer conductor layer for shielding. Replace original cable jacket with a heavy-wall heat-shrinkable sleeve with hot-melt adhesive coating.

2.4.2 Cold-Shrink Rubber-Type Joint

Joint must be of a cold shrink design that does not require any heat source for its installation. Splice insulation and jacket must be of a one-piece factory formed cold shrink sleeve made of black EPDM rubber. Splice should be packaged three splices per kit, including complete installation instructions.

2.5 LIVE END CAPS

Provide live end caps using a "kit" including a heat-shrinkable tube and a high dielectric strength, polymeric plug overlapping the conductor. Conform to applicable portions of IEEE 48.

2.6 TAPE

2.6.1 Insulating Tape

UL 510, plastic insulating tape, capable of performing in a continuous temperature environment of 80 degrees C.

2.6.2 Buried Warning and Identification Tape

Provide detectable tape in accordance with Section 31 00 00 EARTHWORK.

2.6.3 Fireproofing Tape

Provide tape composed of a flexible, conformable, unsupported intumescent elastomer. Tape must be not less than .030 inch thick, noncorrosive to cable sheath, self-extinguishing, noncombustible, adhesive-free, and must not deteriorate when subjected to oil, water, gases, salt water, sewage, and fungus.

2.7 PULL ROPE

Plastic or flat pull line (bull line) having a minimum tensile strength of 200 pounds.

2.8 GROUNDING AND BONDING

2.8.1 Driven Ground Rods

Provide copper-clad steel ground rods conforming to UL 467 not less than 3/4 inch in diameter by 10 feet in length. Sectional type rods may be used for rods 20 feet or longer.

2.8.2 Grounding Conductors

Stranded-bare copper conductors must conform to ASTM B8, Class B, soft-drawn unless otherwise indicated. Solid-bare copper conductors must conform to ASTM B1 for sizes No. 8 and smaller. Insulated conductors must be of the same material as phase conductors and green color-coded, except that conductors must be rated no more than 600 volts. Aluminum is not acceptable.

2.9 CAST-IN-PLACE CONCRETE

Provide concrete in accordance with Section 03 30 00 CAST-IN-PLACE CONCRETE. In addition, provide concrete for encasement of underground ducts with 3000 psi minimum 28-day compressive strength. Concrete associated with electrical work for other than encasement of underground ducts must be 4000 psi minimum 28-day compressive strength unless specified otherwise.

2.10 CABLE TAGS IN MANHOLES

Provide polyethylene tags for each power cable located in manholes. Do not provide handwritten letters. The first position on the power cable tag denotes the voltage. The second through sixth positions on the tag identifies the circuit. The next to last position denotes the phase of the circuit and include the Greek "phi" symbol. The last position denotes the cable size. As an example, a tag could have the following designation: "11.5 NAS 1-8(Phase A)500," denoting that the tagged cable

is on the 11.5kV system circuit number NAS 1-8, underground, Phase A, sized at 500 kcmil.

2.10.1 Polyethylene Cable Tags

Provide tags of polyethylene having an average tensile strength of 3250 pounds per square inch; and that are 0.08 inch thick (minimum), non-corrosive non-conductive; resistive to acids, alkalis, organic solvents, and salt water; and distortion resistant to 170 degrees F. Provide 0.05 inch (minimum) thick black polyethylene tag holder. Provide a one-piece nylon, self-locking tie at each end of the cable tag, having a minimum loop tensile strength of 175 pounds and black block letters, numbers, and symbols one inch high on a yellow background. Letters, numbers, and symbols must not fall off or change positions regardless of the cable tags' orientation.

2.11 MEDIUM VOLTAGE ABOVE GROUND CABLE TERMINATING CABINETS

Cable terminating cabinets must be hook-stick operable, deadfront construction conforming to the requirements of IEEE C37.20.3, Category A. Provide cabinets with 600 A. dead-break junctions and elbow-type separable dead-break connectors, cable parking stands, and grounding lugs. Provide cable terminating equipment in conformance with IEEE 386.

Ratings at 60 Hz must be:

Nominal voltage (kV)	11.5
Rated maximum voltage (kV)	15
Rated continuous current (A)	600
One-second short-time current-carrying capacity (kA)	20
BIL (kV)	95

2.12 SOURCE QUALITY CONTROL

2.12.1 Arc-Proofing Test for Cable Fireproofing Tape

Manufacturer must test one sample assembly consisting of a straight lead tube 12 inches long with a 2 1/2 inch outside diameter, and a 1/8 inch thick wall, and covered with one-half lap layer of arc and fireproofing tape in accordance with manufacturer's instructions. The arc and fireproofing tape must withstand extreme temperature of a high-current fault arc 13,000 degrees K for 70 cycles as determined by using an argon directed plasma jet capable of constantly producing and maintaining an arc temperature of 13,000 degrees K. Temperature (13,000 degrees K) of the ignited arc between the cathode and anode must be obtained from a dc power source of 305 (plus or minus 5) amperes and 20 (plus or minus 1) volts. Direct the arc toward the sample assembly accurately positioned 5 (plus or minus 1) millimeters downstream in the plasma from the anode orifice by fixed flow rate of argon gas (0.18 g per second). Test each sample assembly at three unrelated points. Start time for tests must be taken from recorded peak current when the specimen is exposed to the full test temperature. Surface heat on the specimen prior to that time must be minimal. The end point is established when the plasma or conductive arc

penetrates the protective tape and strikes the lead tube. Submittals for arc-proofing tape must indicate that the test has been performed and passed by the manufacturer.

2.12.2 Medium Voltage Cable Qualification and Production Tests

Results of AEIC CS8 qualification and production tests as applicable for each type of medium voltage cable.

PART 3 EXECUTION

3.1 INSTALLATION

Install equipment and devices in accordance with the manufacturer's published instructions and with the requirements and recommendations of NFPA 70 and IEEE C2 as applicable.

3.2 CABLE INSPECTION

Inspect each cable reel for correct storage positions, signs of physical damage, and broken end seals prior to installation. If end seal is broken, remove moisture from cable prior to installation in accordance with the cable manufacturer's recommendations.

3.3 CABLE INSTALLATION PLAN AND PROCEDURE

Obtain from the manufacturer an installation manual or set of instructions which addresses such aspects as cable construction, insulation type, cable diameter, bending radius, cable temperature limits for installation, lubricants, coefficient of friction, conduit cleaning, storage procedures, moisture seals, testing for and purging moisture, maximum allowable pulling tension, and maximum allowable sidewall bearing pressure. Prepare a checklist of significant requirements.

3.4 UNDERGROUND CONDUIT AND DUCT SYSTEMS

3.4.1 Requirements

Run conduit in straight lines except where a change of direction is necessary. Provide numbers and sizes of ducts as indicated. Provide a 4/0 AWG bare copper grounding conductor above medium-voltage distribution duct banks. Bond bare copper grounding conductor to ground rings (loops) in all manholes and to ground rings (loops) at all equipment slabs (pads). Route grounding conductor into manholes with the duct bank (sleeving is not required). Ducts must have a continuous slope downward toward underground structures and away from buildings, laid with a minimum slope of 3 inches per 100 feet. Depending on the contour of the finished grade, the high-point may be at a terminal, a manhole, a handhole, or between manholes or handholes. Terminate all PVC conduit end points in utility holes, switching cabinets, transform handholes and buildings with end bells. The bell end of the conduits that enter manholes and handholes must be flush with the wall.

Perform changes in ductbank direction as follows:

a. Short-radius manufactured 90-degree duct bends may be used only for pole or equipment risers, unless specifically indicated as acceptable.

b. The minimum manufactured bend radius must be 18 inches for ducts of

less than 3 inch diameter, and 36 inches for ducts 3 inches or greater in diameter.

c. As an exception to the bend radius required above, provide field manufactured longsweep bends having a minimum radius of 25 feet for a change of direction of more than 5 degrees, either horizontally or vertically, using a combination of curved and straight sections. Maximum manufactured curved sections allowed for use in field manufactured longsweep bend: 30 degrees.

3.4.2 Treatment

Keep ducts clean of concrete, dirt, or foreign substances during construction. Make field cuts requiring tapers with proper tools and match factory tapers. Use a coupling recommended by the duct manufacturer whenever an existing duct is connected to a duct of different material or shape. Store ducts to avoid warping and deterioration with ends sufficiently plugged to prevent entry of any water or solid substances. Thoroughly clean ducts before being laid. Store plastic ducts on a flat surface and protected from the direct rays of the sun.

3.4.3 Conduit Cleaning

As each conduit run is completed, for conduit sizes 3 inches and larger, draw a flexible testing mandrel approximately 12 inches long with a diameter less than the inside diameter of the conduit through the conduit. After which, draw a stiff bristle brush through until conduit is clear of particles of earth, sand and gravel; then immediately install conduit plugs. For conduit sizes less than 3 inches, draw a stiff bristle brush through until conduit is clear of particles of earth, sand and gravel; then immediately install conduit plugs.

3.4.4 Multiple Conduits

Separate multiple conduits by a minimum distance of 3 inches. Stagger the joints of the conduits by rows (horizontally) and layers (vertically) to strengthen the conduit assembly. Provide plastic duct spacers that interlock vertically and horizontally. Spacer assembly must consist of base spacers, intermediate spacers, ties, and locking device on top to provide a completely enclosed and locked-in conduit assembly. Install spacers in accordance with manufacturer's instructions, but provide a minimum of two spacer assemblies per 10 feet of conduit assembly.

3.4.5 Conduit Plugs and Pull Rope

Provide new conduit indicated as being unused or empty with plugs on each end. Plugs must contain a weephole or screen to allow water drainage. Provide a plastic pull rope having 3 feet of slack at each end of unused or empty conduits.

3.4.6 Duct Encased in Concrete

Construct underground duct lines of individual conduits encased in concrete. Depths to top of the concrete envelope must be not less than 18 inches below finished grade. Do not mix different kinds of conduit in any one duct bank. Concrete encasement surrounding the bank must be rectangular in cross-section and provide at least 3 inches of concrete cover for ducts. Separate conduits by a minimum concrete thickness of 3 inches. Before pouring concrete, anchor duct bank assemblies, prevent

floating during concrete pouring by driving reinforcing rods adjacent to duct spacer assemblies and attaching the rods to the spacer assembly.

3.4.6.1 Connections to Manholes

Duct bank envelopes connecting to underground structures must be flared to have enlarged cross-section at the manhole entrance to provide additional shear strength. Dimensions of the flared cross-section must be larger than the corresponding manhole opening dimensions by no less than 12 inches in each direction. Perimeter of the duct bank opening in the underground structure must be flared toward the inside or keyed to provide a positive interlock between the duct bank and the wall of the structure. Use vibrators when this portion of the encasement is poured to assure a seal between the envelope and the wall of the structure.

3.4.6.2 Connections to Existing Underground Structures

For duct bank connections to existing structures, break the structure wall out to the dimensions required and preserve steel in the structure wall. Cut steel and extend into the duct bank envelope. Chip the perimeter surface of the duct bank opening to form a key or flared surface, providing a positive connection with the duct bank envelope.

3.4.6.3 Connections to Existing Concrete Pads

For duct bank connections to concrete pads, break an opening in the pad out to the dimensions required and preserve steel in pad. Cut the steel and bend out to tie into the reinforcing of the duct bank envelope. Chip out the opening in the pad to form a key for the duct bank envelope.

3.4.6.4 Connections to Existing Ducts

Where connections to existing duct banks are indicated, excavate the banks to the maximum depth necessary. Cut off the banks and remove loose concrete from the conduits before new concrete-encased ducts are installed. Provide a reinforced concrete collar, poured monolithically with the new duct bank, to take the shear at the joint of the duct banks. Remove existing cables which constitute interference with the work. Abandon in place those no longer used ducts and cables which do not interfere with the work.

3.4.7 Duct Sealing

Seal all electrical penetrations for radon mitigation, maintaining integrity of the vapor barrier, and to prevent infiltration of air, insects, and vermin.

3.5 CABLE PULLING

Test existing duct lines with a mandrel and thoroughly swab out to remove foreign material before pulling cables. Pull cables down grade with the feed-in point at the manhole or buildings of the highest elevation. Use flexible cable feeds to convey cables through manhole opening and into duct runs. Do not exceed the specified cable bending radii when installing cable under any conditions, including turnups into switches, transformers, switchgear, switchboards, and other enclosures. Cable with tape shield must have a bending radius not less than 12 times the overall diameter of the completed cable. If basket-grip type cable-pulling devices are used to pull cable in place, cut off the section of cable

under the grip before splicing and terminating.

3.5.1 Cable Lubricants

Use lubricants that are specifically recommended by the cable manufacturer for assisting in pulling jacketed cables.

3.6 CABLES IN UNDERGROUND STRUCTURES

Do not install cables utilizing the shortest path between penetrations, but route along those walls providing the longest route and the maximum spare cable lengths. Form cables to closely parallel walls, not to interfere with duct entrances, and support on brackets and cable insulators. Support cable splices in underground structures by racks on each side of the splice. Locate splices to prevent cyclic bending in the spliced sheath. Install cables at middle and bottom of cable racks, leaving top space open for future cables, except as otherwise indicated for existing installations. Provide one spare three-insulator rack arm for each cable rack in each underground structure.

3.6.1 Cable Tag Installation

Install cable tags in each manhole as specified, including each splice. Tag wire and cable provided by this contract. Install cable tags over the fireproofing, if any, and locate the tags so that they are clearly visible without disturbing any cabling or wiring in the manholes.

3.7 CONDUCTORS INSTALLED IN PARALLEL

Group conductors such that each conduit of a parallel run contains one Phase A conductor, one Phase B conductor, one Phase C conductor, and one neutral conductor.

3.8 MEDIUM VOLTAGE CABLE TERMINATIONS

Make terminations in accordance with the written instruction of the termination kit manufacturer.

3.9 MEDIUM VOLTAGE CABLE JOINTS

Provide power cable joints (splices) suitable for continuous immersion in water. Make joints only in accessible locations in manholes or handholes by using materials and methods in accordance with the written instructions of the joint kit manufacturer.

3.9.1 Joints in Shielded Cables

Cover the joined area with metallic tape, or material like the original cable shield and connect it to the cable shield on each side of the splice. Provide a bare copper ground connection brought out in a watertight manner and grounded to the manhole grounding loop as part of the splice installation. Ground conductors, connections, and rods must be as specified elsewhere in this section. Wire must be trained to the sides of the enclosure to prevent interference with the working area.

3.10 CABLE END CAPS

Cable ends must be sealed at all times with coated heat shrinkable end caps. Cables ends must be sealed when the cable is delivered to the job

site, while the cable is stored and during installation of the cable. The caps must remain in place until the cable is spliced or terminated. Sealing compounds and tape are not acceptable substitutes for heat shrinkable end caps. Cable which is not sealed in the specified manner at all times will be rejected.

3.11 LIVE END CAPS

Provide live end caps for single conductor medium voltage cables where indicated.

3.12 FIREPROOFING OF CABLES IN UNDERGROUND STRUCTURES

Fireproof (arc proof) wire and cables which will carry current at 2200 volts or more in underground structures.

3.12.1 Fireproofing Tape

Tightly wrap strips of fireproofing tape around each cable spirally in half-lapped wrapping. Install tape in accordance with manufacturer's instructions.

3.12.2 Tape-Wrap

Tape-wrap metallic-sheathed or metallic armored cables without a nonmetallic protective covering over the sheath or armor prior to application of fireproofing. Wrap must be in the form of two tightly applied half-lapped layers of a pressure-sensitive 10 mil thick plastic tape, and must extend not less than one inch into the duct. Even out irregularities of the cable, such as at splices, with insulation putty before applying tape.

3.13 GROUNDING SYSTEMS

NFPA 70 and IEEE C2, except provide grounding systems with a resistance to solid earth ground not exceeding 25 ohms.

3.13.1 Grounding Electrodes

Provide cone pointed driven ground rods driven full depth plus 6 inches, installed to provide an earth ground of the appropriate value for the particular equipment being grounded.
If the specified ground resistance is not met, provide an additional ground rod in accordance with the requirements of NFPA 70 (placed not less than 6 feet from the first rod). Should the resultant (combined) resistance exceed the specified resistance, measured not less than 48 hours after rainfall, notify the Contracting Officer immediately.

3.13.2 Grounding Connections

Make grounding connections which are buried or otherwise normally inaccessible, by exothermic weld or compression connector.

a. Make exothermic welds strictly in accordance with the weld manufacturer's written recommendations. Welds which are "puffed up" or which show convex surfaces indicating improper cleaning are not acceptable. Mechanical connectors are not required at exothermic welds.

b. Make compression connections using a hydraulic compression tool to provide the correct circumferential pressure. Tools and dies must be as recommended by the manufacturer. An embossing die code or other standard method must provide visible indication that a connector has been adequately compressed on the ground wire.

3.13.3 Grounding Conductors

Provide bare grounding conductors, except where installed in conduit with associated phase conductors. Ground cable sheaths, cable shields, conduit, and equipment with No. 6 AWG. Ground other noncurrent-carrying metal parts and equipment frames of metal-enclosed equipment. Ground metallic frames and covers of handholes and pull boxes with a braided, copper ground strap with equivalent ampacity of No. 6 AWG.

3.14 EXCAVATING, BACKFILLING, AND COMPACTING

Provide in accordance with NFPA 70 and Section 31 00 00 EARTHWORK.

3.14.1 Reconditioning of Surfaces

3.14.1.1 Unpaved Surfaces

Restore to their original elevation and condition unpaved surfaces disturbed during installation of duct . Preserve sod and topsoil removed during excavation and reinstall after backfilling is completed. Replace sod that is damaged by sod of quality equal to that removed. When the surface is disturbed in a newly seeded area, re-seed the restored surface with the same quantity and formula of seed as that used in the original seeding, and provide topsoiling, fertilizing, liming, seeding, sodding, sprigging, or mulching.

3.14.1.2 Paving Repairs

Where trenches, pits, or other excavations are made in existing roadways and other areas of pavement where surface treatment of any kind exists , restore such surface treatment or pavement the same thickness and in the same kind as previously existed, except as otherwise specified, and to match and tie into the adjacent and surrounding existing surfaces.

3.15 CAST-IN-PLACE CONCRETE

Provide concrete in accordance with Section 03 30 00 CAST-IN-PLACE CONCRETE.

3.15.1 Concrete Slabs (Pads) for Equipment

Unless otherwise indicated, the slab must be at least 8 inches thick, reinforced with a 6 by 6 - W2.9 by W2.9 mesh, placed uniformly 4 inches from the top of the slab. Place slab on a 6 inch thick, well-compacted gravel base. Top of concrete slab must be approximately 4 inches above finished grade with gradual slope for drainage. Edges above grade must have 1/2 inch chamfer. Slab must be of adequate size to project at least 8 inches beyond the equipment.

Stub up conduits, with bushings, 2 inches into cable wells in the concrete pad. Coordinate dimensions of cable wells with transformer cable training areas.

3.16 FIELD QUALITY CONTROL

3.16.1 Performance of Field Acceptance Checks and Tests

Perform in accordance with the manufacturer's recommendations, and include the following visual and mechanical inspections and electrical tests, performed in accordance with NETA ATS.

3.16.1.1 Medium Voltage Cables

Perform tests after installation of cable, splices, and terminators and before terminating to equipment or splicing to existing circuits.

a. Visual and Mechanical Inspection

(1) Inspect exposed cable sections for physical damage.

(2) Verify that cable is supplied and connected in accordance with contract plans and specifications.

(3) Inspect for proper shield grounding, cable support, and cable termination.

(4) Verify that cable bends are not less than ICEA or manufacturer's minimum allowable bending radius.

(5) Inspect for proper fireproofing.

(6) Visually inspect jacket and insulation condition.

(7) Inspect for proper phase identification and arrangement.

b. Electrical Tests

(1) Perform a shield continuity test on each power cable by ohmmeter method. Record ohmic value, resistance values in excess of 10 ohms per 1000 feet of cable must be investigated and justified.

(2) Perform acceptance test on new cables before the new cables are connected to existing cables and placed into service, including terminations and joints. Perform maintenance test on complete cable system after the new cables are connected to existing cables and placed into service, including existing cable, terminations, and joints. Tests must be very low frequency (VLF) alternating voltage withstand tests in accordance with IEEE 400.2. VLF test frequency must be 0.05 Hz minimum for a duration of 60 minutes using a sinusoidal waveform. Test voltages must be as follows:

CABLE RATING	AC TEST VOLTAGE for ACCEPTANCE TESTING
5 kV	10kV rms(peak)
8 kV	13kV rms(peak)

CABLE RATING AC TEST VOLTAGE for ACCEPTANCE TESTING	
15 kV	20kV rms(peak)
25 kV	31kV rms(peak)
35 kV	44kV rms(peak)

CABLE RATING AC TEST VOLTAGE for MAINTENANCE TESTING	
5 kV	7kV rms(peak)
8 kV	10kV rms(peak)
15 kV	16kV rms(peak)
25 kV	23kV rms(peak)
35 kV	33kV rms(peak)

3.16.1.2 Low Voltage Cables, 600-Volt

Perform tests after installation of cable, splices and terminations and before terminating to equipment or splicing to existing circuits.

a. Visual and Mechanical Inspection

(1) Inspect exposed cable sections for physical damage.

(2) Verify that cable is supplied and connected in accordance with contract plans and specifications.

(3) Verify tightness of accessible bolted electrical connections.

(4) Inspect compression-applied connectors for correct cable match and indentation.

(5) Visually inspect jacket and insulation condition.

(6) Inspect for proper phase identification and arrangement.

b. Electrical Tests

(1) Perform insulation resistance tests on wiring No. 6 AWG and larger diameter using instrument which applies voltage of approximately 1000 volts dc for one minute.

(2) Perform continuity tests to insure correct cable connection.

3.16.1.3 Grounding System

a. Visual and mechanical inspection

Inspect ground system for compliance with contract plans and

specifications.

b. Electrical tests

Perform ground-impedance measurements utilizing the fall-of-potential method in accordance with IEEE 81. On systems consisting of interconnected ground rods, perform tests after interconnections are complete. On systems consisting of a single ground rod perform tests before any wire is connected. Take measurements in normally dry weather, not less than 48 hours after rainfall. Use a portable ground resistance tester in accordance with manufacturer's instructions to test each ground or group of grounds. The instrument must be equipped with a meter reading directly in ohms or fractions thereof to indicate the ground value of the ground rod or grounding systems under test. Provide site diagram indicating location of test probes with associated distances, and provide a plot of resistance vs. distance.

c. MV Switch Settings

Provide Submittal to UEM to request updated MV Switch settings.

3.16.2 Follow-Up Verification

Upon completion of acceptance checks and tests, show by demonstration in service that circuits and devices are in good operating condition and properly performing the intended function. As an exception to requirements stated elsewhere in the contract, the Contracting Officer must be given 5 working days advance notice of the dates and times of checking and testing.

.... -- End of Section --