STATEMENT OF WORK
149th IS Building 4750 Furniture
10616 Superfortress Ave, Bldg. 4750
Mather, CA 95655
12 Aug 2026

1.0 SCOPE

This is a furniture requirement for the 149th IS Building 4750 at Mather CA 95655. Timely delivery and installation are essential for government operational use. Upon award, the 149th will require that the bill of materials is tagged by area/room for ease of installation. Furniture Project Delivery, staging, and installation/configuration of furniture will result in a turn-key furniture solution in accordance with the final furniture design.

2.0 DESCRIPTION OF THE WORK

2.1 General Work

Coordination and management of all products, equipment and people required to create, deliver and install new furniture.

- The contractor shall provide a Project Manager or project designer and installation foreman with a minimum of 3 years of experience who must be onsite during installation.
- Installation must be performed by certified personnel required to maintain product warranties
- The contractor shall be knowledgeable and shall comply with all applicable federal, state, and local laws, codes, permits and base requirements.

2.2 Design Work

- The contractor must provide shop and installation drawings, complete product list, detailed cost of product broken down by room, and detailed cost of labor fees.
- Contractor shall provide brochures of proposed products finishes available, commercial warranty information, samples of fabrics, finishes, and colors
- The contractor is required to take measures to verify all furniture will fit into the designated space**.**

2.3 Delivery, Installation and Removal Work

- Purchase of new furniture will be in accordance with activation schedule; timing is critical. The government requires complete delivery of all furniture items within 90 calendar days after receipt of award. No additional storage fees will be charged, and installation shall occur in one phase. There is no available space for contractor storage of items on site.
- During installation the contractor shall protect all furniture and building materials, including carpet. Contractor shall be liable for any damage to government property caused by the contractor or their representatives.

- All trash removed from the worksite shall be disposed of in accordance with state laws, and packaging shall be recycled wherever possible. The contractor is responsible for providing their own means of trash disposal, as there are no government dumpsters available on site.

2.4 Inspection/Acceptance Checklist

- A post-installation walkthrough shall be coordinated by the contractor's authorized representative and Government representative.
- All areas requiring correction shall be documented in a punch list. No payment will be authorized while punch list items remain open.

3.0 Product Specifications

3.1 Overall Workstation Specifications

- Paint finishes will be standard finishes, no metallic finishes, and a medium tone gray/taupe. All fabric should be specified as a grade 3, unless otherwise noted.
- Worksurfaces to be laminate with particle-board core, with grommets, high-pressure laminate, flat PVC edge band or full wood.
- Height adjustable surfaces require an electric mechanism (26-46" range). The height adjustment for sit-to-stand desks refers to the worksurface itself and must have a motorized range that includes 30" to 54. Laminate tops must allow 1" gap on either side/back to prevent pinch-points.
- Flipper cabinets should have locks and metal fronts. Flipper doors shall be removable from the shelf if required for future reconfiguration.
- Workstation panel heights range from approximately 35"H to 68" H. Frame system with individual tiles. Must allow power (21" AFF) and data (19" AFF) within the raceway. Widths 18" to 60". Must have 4" feet for airflow for radiators. 8-wire electrical system capable. UL listed.
- Combo cabinets: approx. 36" W x 18" D x 67" H. Bottom 2 drawers lateral file, top is double door with 2 adjustable shelves. Lockable.
- Lateral file cabinets, Storage cabinets, and Bookcases to be metal steel construction with baked enamel finish. Locks required and ability to key areas alike.
- Modular panels shall be a frame system with individual tiles on both sides of the panel. Each frame shall have a top cap, cable management side covers, and adjustable glides up to 1" vertically.
- The frames shall be designed to accommodate hanging components like work surfaces and shelves which could be adjusted in 1" increments. All components must have a safety anti-dislodgment feature.

- Panel system MUST allow power and data to be located within the raceway AND just below standard worksurface height. Electrical duplexes should be at 21” AFF and data jacks should be at 19” AFF.
- Frames should have a wire management system that permits both low-voltage and data telecommunications cabling to be accessible at both sides of the frame. Frames must also have the capability to run electrical harnesses for an 8-wire electrical system. The entire system must be UL listed.
- Panel system MUST have “feet” on them to allow for airflow. We need approximately 4” of space under the tiles to allow for nearby radiators to be functional.
- Plastic or metal pencil tray shall be provided in the top drawer of the configured box/box/file cabinets.
- Metal components to be specified in standard colors, no metallic finishes.
- All storage pieces to be steel construction with standard pull style.
- All fabric should be specified as a grade 3, unless otherwise noted.
- Combo cabinets consist of overall dimensions approximately 36” wide x 18” deep by 67” high cabinet the bottom 2 drawers are a lateral file drawer with lock, and the top partition is a double door cabinet with 2 adjustable shelves inside with lock same key as the bottom lateral drawers. Metal steel construction with baked enamel finish, painted color. The drawer pull shall be a bar style.
- Lateral file cabinets shall be metal steel construction with based enamel finish, frame type steel base with baked enamel finish, paint color and 4 leveling glides, metal tops with square edges, locks, hanging file folder rails for front to back filing. Drawer pull shall be a bar style. The file shall hold letters, legal size hanging files. It should have adjustable glides for leveling, and a positive interlock system that permits only one drawer to open at a time. The lateral file exterior case shall be formed with one single sheet of at least 22 gauge cold rolled steel.
- There are no "cubicle systems" or built-in monolithic tile workstation systems required for this project. All desks are freestanding height-adjustable tables with supporting credenzas. References to "modular panels" or "partitions" refer to the freestanding desktop privacy/modesty screens and the 6" tackable partitions utilized between face-to-face desks.
- Not all desks, storage, etc. other furniture items are not specified due to not having a floor plan that would help determine the sizes. The intent is to maximize the size of desks, storage etc. while allowing easy flow of foot traffic and space.
- All furniture colors for non-specified items should adhere to a grayscale or black color scheme to match existing items.

4.0 Site Conditions

- Free and clear hard surface access to the receiving and installation location during regular working hours. The installation spaces will be empty and clear of any previous furnishings prior to the contractor's arrival. Parking and off-loading area suitable for access within 100 feet.
- All personnel will need to be vetted to have access to the installation. Once vetted, contractor personnel can come on and off base without an escort.
- All installation and performance will be during normal duty hours, Monday through Friday 0700-1800, except federal holidays. If the contractor is required to work outside standard times, a request must be submitted to the contracting officer 48 hours in advance, indicating the reason why performance is required during nonstandard hours.

5.0 Base/Installation Specifics

- The sole delivery and installation location is 10616 Superfortress Ave, Bldg. 4750, Mather, CA 95655. All commercial trucks must enter through the designated Mather commercial gate for inspection.
- Current Bill of Lading (BOL) must include the installation name, date of anticipated delivery, and specific destination (including building 4750).

6.0 Performance Objective Summary

- **General Oversight:** Resolution of all issues identified by Government representative within 24 hours.
- **Delivery:** Zero late deliveries. Damage resolved in accordance with the SOW.
- **Installation:** Assembled per manufacturer’s instructions and customer’s approved layout. complaints resolved within 48 hours.
- **Acceptance:** Zero punch list items remain unresolved prior to project completion.

7.0 Scope of the building

7.1 Specified Rooms that need furnishing

The table below briefly states the room number, name and what it’s intended use is. Below are Electrical schematics. Descriptions are not entirely reflective of what furniture is needed for the rooms and images are for illustrative purposes

The black out rooms are not within the scope of this project.

Scope of the building

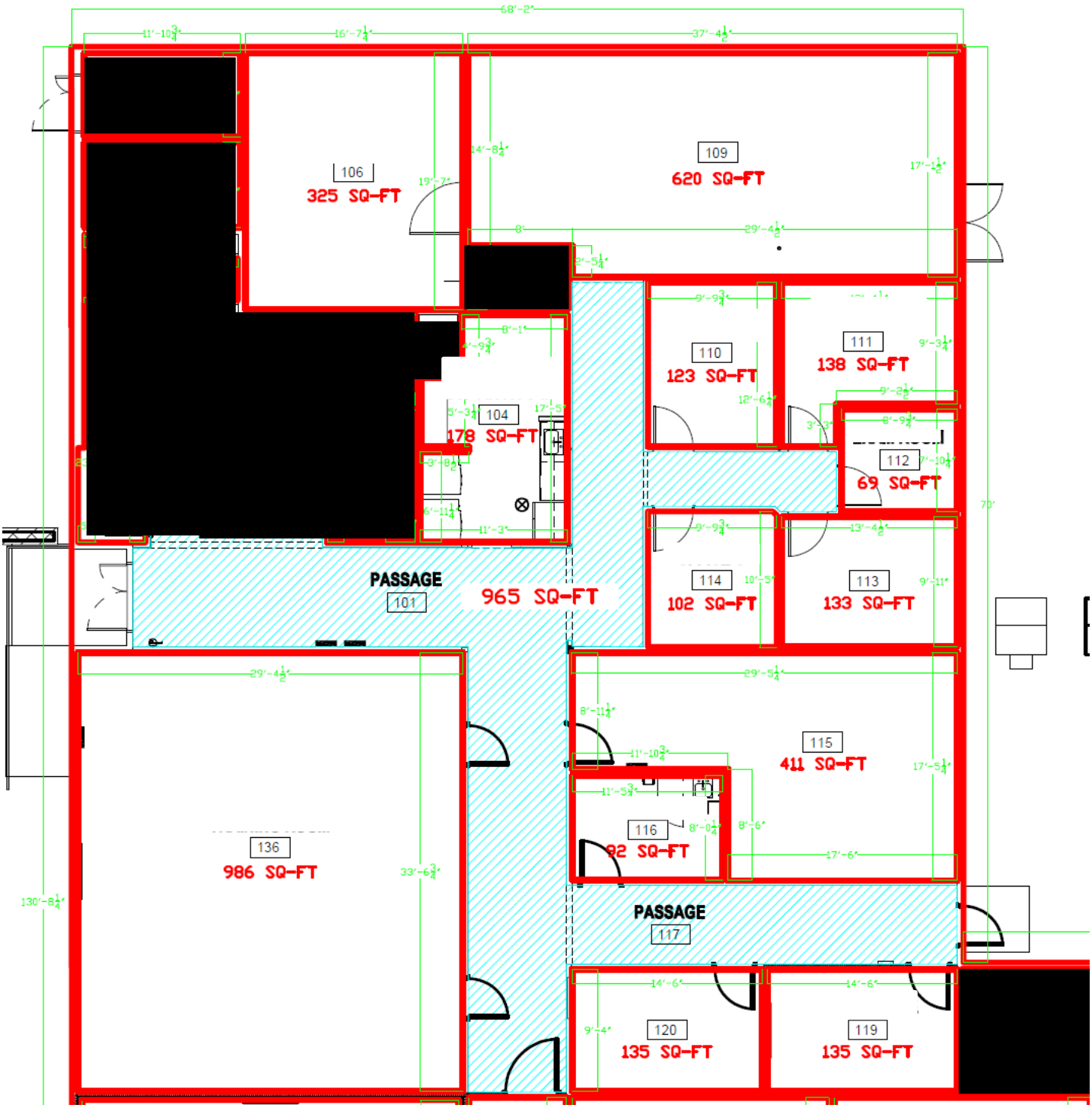

7.2 Room-Specific Intentions and Specifications

Room 104

Intention: Break Room lunches and relaxing

Furniture: Barstool chairs, sitting table with wheels, 4 café chairs. The height from the floor to the bottom of the counter is 39.5 inches.

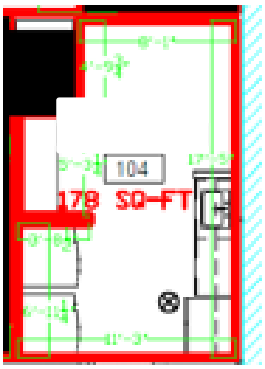

Room 106

Intention: To hold conference calls and leadership meetings with some additional chairs along the wall. A lectern against the wall where TVs will be mounted. Vendor's proposal must maximize seating for up to 40 members with additional chairs placed along the wall.

Specifications:

Rectangular Conference Table: Size should be large enough seating space for 8 to 16 people to sit while not eliminating space along the wall for scribes to sit along, e.g a 42” x 144”. Conference tables feature high pressure laminate tops and matching panel base. Panel base includes (1) silver finish power module with a minimum of 2 receptacles and 1 data port. Mix and match from our complete line of contemporary style office furniture designed for managerial and executive offices in the modern workplace.

Conference chair: Ergonomic Chair, Mid Back, Medium Seat, Multi-tilt Mechanism, Chrome Loop Arms. Seat width 19.5-inch, Seat depth 16.5-19.5-inch, Seat height range16.5 inch to 21.5-inch, Back width 19.5-inch, Back height 21 inch to 24-inch, Back angle107 degrees to 128 degrees. Dimensions 39-inch x 26-inch x 26 inch

Lectern: Executive Lectern is ideal for any boardroom or conference room setting. Curved shelves allow the speaker to stand close to the lectern. Design also features a slanted reading surface (23-5/8" wide x 19-7/8" deep) with a pencil tray and cushioned wrist support/paper stop. The pullout shelf (15-3/4" wide x 15-3/8" deep) slides out on the left or right to hold your laptop computer, projector or additional presentation notes. Store equipment and supplies on two curved shelves (23-1/2" wide x 14-1/4" deep). The upper shelf is adjustable in 2-1/2" increments, and the lower shelf is fixed. Easily relocate the lectern on the four 2" diameter, dual-wheel carpet, swivel casters (two locking).

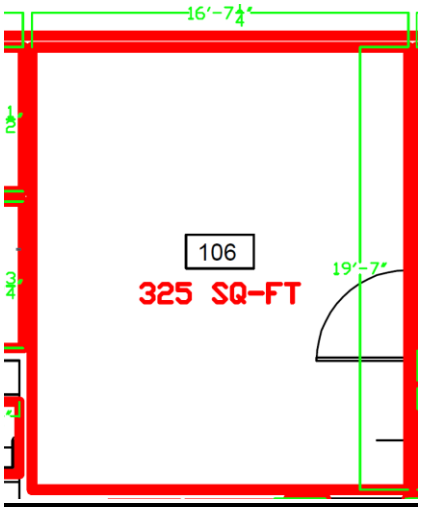
16'-7¼"
106
325 SQ-FT
19'-7"

Room 109

109 Intention:

This large space will be a lounge area that will allow members to sit down and charge their phone or laptops

109 Specifications

Backless double bench seats lined against the wall. No backs are required on the benches unless it goes with the flow of the vendor's proposed design.

Small 18” round table

Cubbie Storage Cabinets (3): 12 Openings, Open Front, Steel, 46"W x 18"D x 66"H, Dove Gray

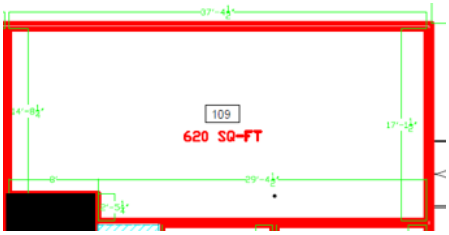

Room 110

110 Intention:

The CSS room administration room where two personnel have adjustable tables able to support either large or multi-monitor stands. Desks shall have storage cabinets either integrated L- Shape into the desk or flush near the desk. Chairs shall have ergonomic features that allow long time usage through the entire week. If space permitting, having an additional lateral shelving unit that is lockable with a key.

This room is an executive suite where they have a larger than standard L-Shaped credenza with an adjustable desk. Provide optimal storage for files and miscellaneous items. The chair will be an executive chair that allows more adjustments and comforts than an ordinary chair. Guest chairs need to be on caster to allow easy relocation as needed.

110 Specifications:

L shaped Adjustable height desk (able to be left or right hand): The desk is made of a durable 1" commercial work surface with melamine finish that resist scratches, stains and wear. The electric mechanism allows you to quickly and quietly adjust the 72W X

30D desk’s height of the table from 28" to 45". The control button is located on the front edge of the work surface for easy access. The L-Desk features an impact resistant PVC edge. There is not a full credenza requirement for this room. If overhead storage or backboard is part of the proposed design, it should not obstruct the windows from a seated position. The bottom of the windows is 48" from the ground.

Chair: 26 1/4" W x 20-22" D x 37 1/2-43 1/2" H (Overall), Mesh Back, Upholstered Seat, Fixed Arms. This line of office seating is fully ergonomic and features pneumatic height adjustment, adjustable lumbar support, seat slider, swivel tilt lock with tension control, and urethane padded arm rests. Seating comes standard with dual hard wheels for use on carpeted floors and are rated for 300 lb. weight capacity.

Cabinet: 36" W x 19" D x 64" H, 5-Drawer High Lateral File with (1) Top Roll-out Shelf and (4) Bottom Drawers. Metal lateral file cabinets are made of powder coated steel and feature lock that comes with two (2) keys. Drawers are adjustable to accept legal (side to side) or letter (front to back) hanging folders. Includes one set with two keys.

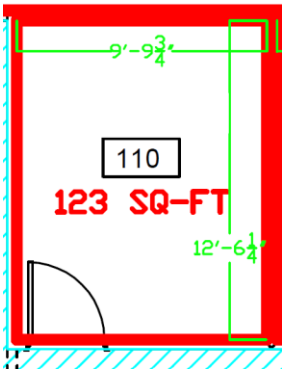

Specifications: Room 111

Desk: While a U-shaped desk is specified, vendors are encouraged to propose alternative layouts and designs better suited for the room to maximize functionality and space. U-Shaped thermally fused laminate desk with bow front. Organizational features such as fabric tack board, 6 cubby shelves for easy access. Conceal books, binders and office supplies behind 4 Hutch doors, 2 and 3 Drawer Cabinets. Full-extension file drawers slides. If other layout design are better suited for the size of the room, have an option that will display the floor plan.

Executive Chair: Wide High Back Ergonomic Chair with Minimal Contour Medium Seat. Seat Height Adjustment 17.5 inch to 22.5 inch, Seat Width 23 inch, Seat Depth Range 15inch to 17.5 inch, Back Width 22.5 inch, Back Height 25 inch, Back Height Range21.5 inch to 25.5 inch, Armrest Height Range 7 inch to 11 inch, Armrest Width Range 15.75 inch to 22.25 inch, Back Angle 98 degrees to 113 degrees, Seat AngleF9 degrees to R6 degrees. Dimensions 42-inch x 26 inch x 26 inch.

Guest Chair: Two (2) guest chairs are required for this room w/Arms/Casters,24-3/4"x23"x32-3/4".

Room 111: Command

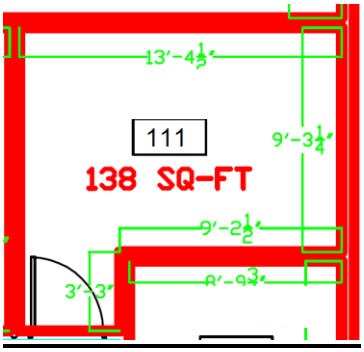

Room 112
This room is intended to be used for administrator office work and will require one workstations that allow storage of documents and for one-on-one meetings

Specifications:
L shaped Adjustable height desk (able to be left or right hand): The desk is made of a durable 1" commercial grade work surface with melamine finish that resist scratches, stains and wear. The electric mechanism allows you to quickly and quietly adjust the 72W X 30D desk's height of the table from 28" to 45". The control button is located on the front edge of the work surface for easy access. Voltage: 110V. The L-Desk features an impact resistant PVC edge, classic moldings and a modesty panel on the credenza.

Chair: 26 1/4" W x 20-22" D x 37 1/2-43 1/2" H (Overall), Mesh Back, Upholstered Seat, Fixed Arms. This line of office seating is fully ergonomic and features pneumatic height adjustment, adjustable lumbar support, seat slider, swivel tilt lock with tension control, and urethane padded arm rests. Seating comes standard with dual hard wheels for use on carpeted floors and are rated for 300 lb. weight capacity. Two (2) guest chairs are required for this room

<u>Room 112 : Office</u>

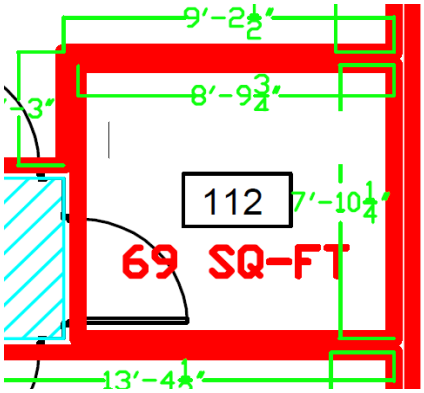

Room 113

Intention:
This room is intended to be used for administrator office work and will require two workstations that allow storage of documents and for one-on-one meetings.

Specifications:
L shaped Adjustable height desk (able to be left or right hand): The desk is made of a durable 1" commercial grade work surface with melamine finish that resist scratches, stains and wear. The electric mechanism allows you to quickly and quietly adjust the 72W X 30D desk's height of the table from 28" to 45". The control button is located on the front edge of the work surface for easy access. Voltage: 110V. The L-Desk features an impact resistant PVC edge, classic moldings and a modesty panel on the credenza.

Chairs: 26 1/4" W x 20-22" D x 37 1/2-43 1/2" H (Overall), Mesh Back, Upholstered Seat, Fixed Arms. This line of office seating is fully ergonomic and features pneumatic height adjustment, adjustable lumbar support, seat slider, swivel tilt lock with tension control, and urethane padded arm rests. Seating comes standard with dual hard wheels for use on carpeted floors and are rated for 300 lb. weight capacity.

Cabinet: 36" W x 19" D x 64" H, 5-Drawer High Lateral File with (1) Top Roll-out Shelf and (4) Bottom Drawers. Metal lateral file cabinets are made of powder coated steel and feature lock that comes with two (2) keys. Drawers are adjustable to accept legal (side to side) or letter (front to back) hanging folders. Includes one set with two keys.

Guest Chair: Two (2) guest chairs are required for this room, w/Arms/Casters,24-3/4"x23"x32-3/4"

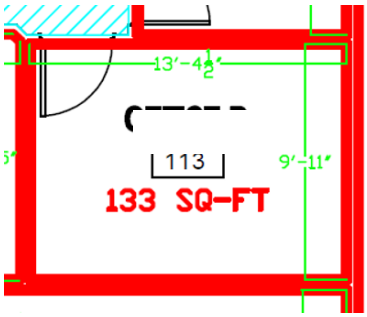

Room 114

Intention: This room is intended to be used for administrator office work for two occupants. Our head personalist will use this room for administrative work and will need storage space for documents and other items as well.

Specifications:

L shaped Adjustable height desk (able to be left or right hand): The desk is made of a durable 1" commercial grade work surface with melamine finish that resist scratches, stains and wear. The electric mechanism allows you to quickly and quietly adjust the 72W X 30D desk's height of the table from 28" to 45". The control button is located on the front edge of the work surface for an easy access. Voltage : 110V. The L-Desk features an impact resistant PVC edge, classic moldings and a modesty panel on the credenza.

Chair: 26 1/4" W x 20-22" D x 37 1/2-43 1/2" H (Overall), Mesh Back, Upholstered Seat, Fixed Arms. line of office seating is fully ergonomic and features pneumatic height adjustment, adjustable lumbar support, seat slider, swivel tilt lock with tension control, and urethane padded arm rests. Seating comes standard with dual hard wheels for use on carpeted floors and are rated for 300 lb. weight capacity.

Cabinet: 36" W x 19" D x 64" H, 5-Drawer High Lateral File with (1) Top Roll-out Shelf and (4) Bottom Drawers. Metal lateral file cabinets are made of powder coated steel and feature lock that comes with two (2) keys. Drawers are adjustable to accept legal (side to side) or letter (front to back) hanging folders. Includes one set with two keys.

Guest Chair: Chair, w/Arms/Casters,24-3/4"x23"x32-3/4",

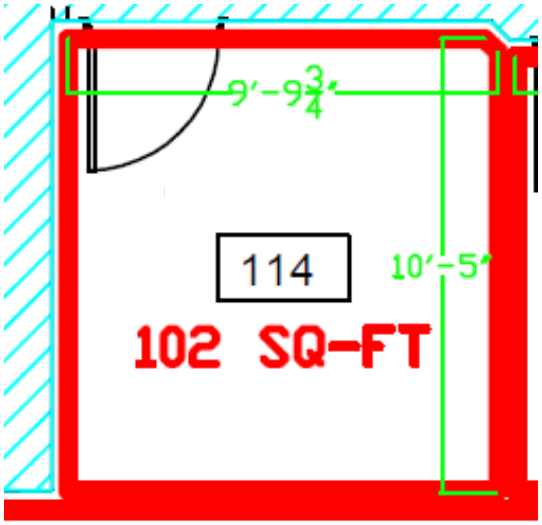

Room 115

Intention: This is an information technology and communications room. The space is to be maximized with workstations to assist with help desk tickets and have a workbench where they can repair and modify computers along with storage for electronic equipment and tools

Specifications:

L shaped Adjustable height desk (able to be left or right hand): The desk is made of a durable 1" commercial grade work surface with melamine finish that resist scratches, stains and wear. The electric mechanism allows you to quickly and quietly adjust the 72W X 30D desk's height of the table from 28" to 45". The control button is located on the front edge of the work surface for easy access. Voltage: 110V. The L-Desk features an impact resistant PVC edge, classic moldings and a modesty panel on the credenza.

Chair: 26 1/4" W x 20-22" D x 37 1/2-43 1/2" H (Overall), Mesh Back, Upholstered Seat, Fixed Arms. This line of office seating is fully ergonomic and features pneumatic height adjustment, adjustable lumbar support, seat slider, swivel tilt lock with tension control, and urethane padded arm rests. Seating comes standard with dual hard wheels for use on carpeted floors and are rated at 300 lb. weight capacity.

Cabinet: 36" W x 19" D x 64" H, 5-Drawer High Lateral File with (1) Top Roll-out Shelf and (4) Bottom Drawers. Metal lateral file cabinets are made of powder coated steel and feature lock that comes with two (2) keys. Drawers are adjustable to accept legal (side to side) or letter (front to back) hanging folders. Includes one set with two keys.

Cabinet: 42" W x 19" D x 40" H, 3-Drawer High Lateral File. Metal lateral file cabinets are made of powder coated steel and feature lock that comes with two (2) keys. Drawers are adjustable to accept legal (side to side) or letter (front to back) hanging folders. Includes one set with two keys.

Desk: 72W X 30D HEIGHT ADJUSTABLE STANDING height of the table from 28" to 45". The control button is located on the front edge of the work surface for easy access. Voltage: 110V. Support multiple monitors and weight on surface.

Work Bench: Stationary Work Benches, Bench Style: Heavy-Duty Work Bench with Riser; Edge Type: Rounded; Leg Style: Fixed; Depth (Inch): 30 -36"; Color: Gray; Maximum Height (Inch): 34-1/4in. 60" width sensitive electronics will be worked on this station. Electrical plugs, lights, and anti-static mats for the workbench are not a requirement of this SOW.

Stool: Work Chair, Molded Black self-skin polyurethane seat and back, Carpet twin-wheel casters. Options: Adjustable Back Height, Additional Casters, Additional Pneumatic Gas Cylinders, Arm

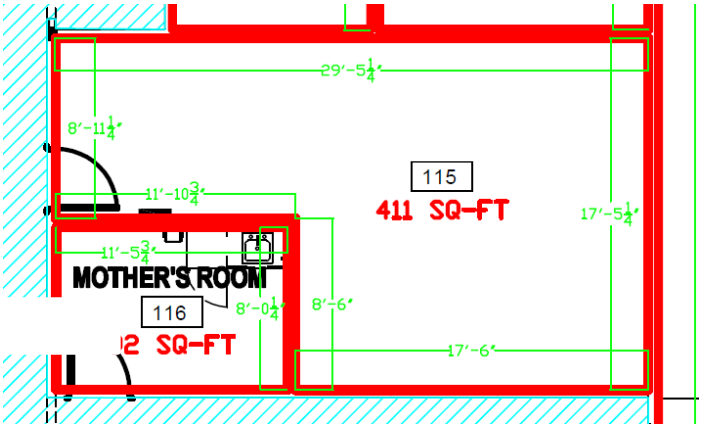
29'-5¼"
8'-11¼"
115
411 SQ-FT
11'-10¾"
17'-5¼"
11'-5¾"
MOTHER'S ROOM
116
8'-0¼"
8'-6"
2 SQ-FT
17'-6"

Room 116

<u>Intention:</u>
This room is intended to be used as a other's room to allow childcare needs as they occur. It will also have storage racks for storing need products.

Specifications:

Seat: The requirement is for one (1) heavy-duty, ergonomic glider/rocker-recliner.

Table: either incorporated with the chair or a side table

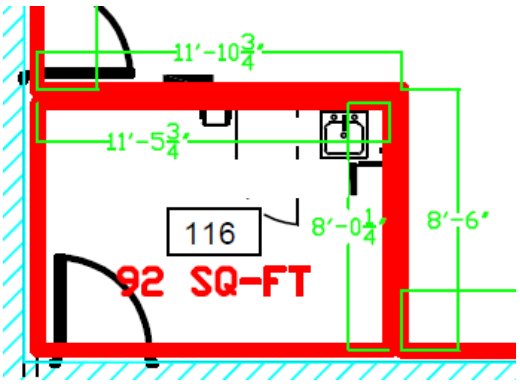

Room 119

Intention: Storage 119
This is room is where our bulk communication systems will be stored as well as other larger equipment and supplies and secured storage container for specialized items.

Specifications:

Large Storage: Bulk Rack Starter Unit ; 48X36X123 11 400LB – Bulk Storage Rack Starter Unit width 48 IN, Dept 36 IN.

Caged Containment Shelving: All shelves are constructed from Galvanized steel and are adjustable in 1 1/2 increments. Each shelf can handle 250 lbs. Enclosed Containment Shelves Cage Small Containers Capacity 90 Gal. Sump Capacity 48 Gal. Height 87 In. Width 74 In. Depth 28 In. Manual 2-Door Door Opening Height 86 In. Door Opening Width 74 In.

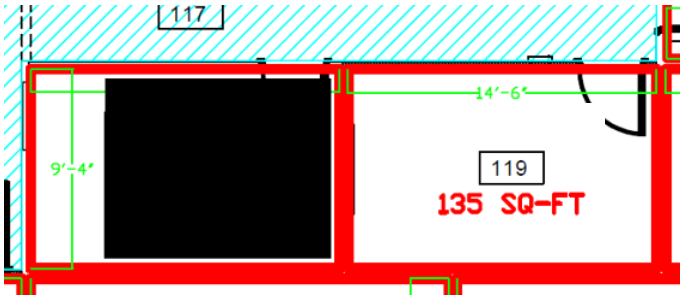

Room 120

Intention: The CSS room is intended to be an administration room where three personnel have adjustable tables able to support either large or multi-monitor stands. Desks shall have storage cabinets either integrated L- Shape into the desk or flush near the desk. Chairs shall have ergonomic features that allow long time usage through the entire week. As well, if space permitting, having an additional lateral shelving unit that is lockable with a key

Specifications:

L shaped Adjustable height desk (able to be left or right hand): The desk is made of a durable 1" commercial work surface with melamine finish that resist scratches, stains and wear. The electric mechanism allows you to quickly and quietly adjust the 72W X 30D desk's height of the table from 28" to 45". The control button is located on the front edge of the work surface for easy access. Voltage: 110V. The L-Desk features an impact resistant PVC edge, classic moldings and a modesty panel on the credenza.

Chair: 26 1/4" W x 20-22" D x 37 1/2-43 1/2" H (Overall), Mesh Back, Upholstered Seat, Fixed Arms. This line of office seating is fully ergonomic and features pneumatic height adjustment, adjustable lumbar support, seat slider, swivel tilt lock with tension control, and urethane padded arm rests. Seating comes standard with dual hard wheels for use on carpeted floors and are rated for 300 lb. weight capacity.

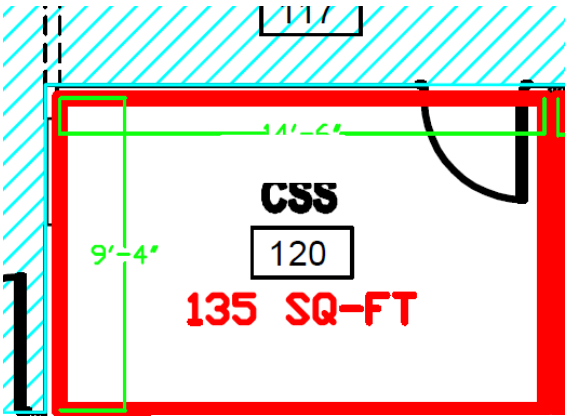
CSS
120
9'-4"
135 SQ-FT

Room 136

Intention: This room will be used for briefings, training, speeches and demonstrations. A lectern will be at the front and needs to be able to be easily moved around. Tables must be able to be easily moved around, and flip and chairs must be able to freely be moved around and stacked. To be able to seat at least 40 members behind the tables.

Specifications:
Lectern: Executive Lectern is ideal for any boardroom or conference room setting. Curved shelves allow the speaker to stand close to the lectern. Design also features a slanted reading surface (23-5/8" wide x 19-7/8" deep) with a pencil tray and cushioned wrist support/paper stop. The pullout shelf (15-3/4" wide x 15-3/8" deep) slides out on the left or right to hold your laptop computer, projector or additional presentation notes. Store equipment and supplies on two curved shelves (23-1/2" wide x 14-1/4" deep). The upper shelf is adjustable in 2-1/2" increments, and the lower shelf is fixed. Easily relocate the lectern on the four 2" diameter, dual-wheel carpet, swivel casters (two locking).

Table: Flip-Top Training Table provides flexible configuration and easy storage options. Top features a high-pressure laminate surface with two grommets. Steel frame on the 72" length, and either a 18” – 24” depth and the table is powder-coated for durability

Chair: Mesh back. Comfortable, 3" thick high density foam seat. Tailored upholstery. Nesting chairs are preferred over stacking chairs, up to 300 lbs. wight capacity.

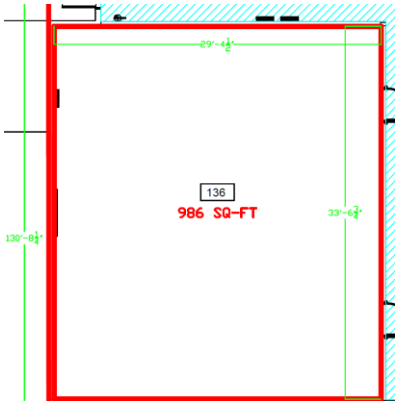

8.0 Furniture summary table

Room	Name	Quantity
104	Barstool Chairs	2
104	Siting table with wheels	1
104	café chairs	4
106	Rectangular Conference Table:	1
106	Conference chair	10
106	Lectern	1
109	Double bench	3
109	Round Table	2
109	Cubbie storage cabinet 12 openings	3
110	L shaped Adjustable height desk	2
110	Office Chairs	2
110	Filing Cabinet	1
111	U shaped commanders desk	1
111	Executive chair	2
111	Guest chairs	2
112	L shaped Adjustable height desk	1
112	Office Chair	1
112	Guest Chairs	2
113	L shaped Adjustable height desk	2
113	Office Chairs	2
113	Filing Cabinet	1
113	Guest chairs	2
114	L shaped Adjustable height desk	2
114	Office Chairs	2
114	Filing Cabinet	1
114	Guest chairs	2
115	L shaped Adjustable height desk	5
115	Office Chairs	5
115	Filing Cabinet	2
115	work bench	1
115	stool	1
116	Rocker Recliner	1
116	Side Table	1
119	Cage containment shelving	1
119	Containment shelving	2
119	Large storage bulk rack	1
120	L shaped Adjustable height desk	3
120	Office Chairs	3
136	Lectern	1
136	Flip-Top Training	20
136	Mesh back nesting chair	40