USCGC OLIVER HENRY (WPC 1140)

SPECIFICATION FOR UNPLANNED DOCKSIDE REPAIRS

FY2026

Developed By: Patrick J Carr

(Rev-0, 5 August 2026)

TABLE OF CONTENTS

Revisions Record iii
Consolidated List of References iv
Consolidated List of Government-furnished Property v
Consolidated List of Critical Inspection Items vi
Principal Characteristics vii
General Requirements 1
WORK ITEM 1: MDEs, Renew 15

REVISIONS RECORD

This page is used to record specification revisions, which may have occurred subsequent to a Revision 0 (Rev-0) package. Information listed is intended to provide contractors and field unit personnel a means to ensure all the current specification revision pages are present when reviewing or utilizing this specification package.

DATE	REV#	WORK ITEM#	CHANGES MADE

NOTE : All work item and paragraph numbers listed above for a given revision correspond to same numbers in the previous revision. This revised specification is self-contained with all of the above listed changes incorporated.

CONSOLIDATED LIST OF REFERENCES

The below-listed documents form a part of this specification to the extent specified herein. Approval/publication dates or revision dates/numbers are also identified, to ensure that same document versions are used at the time of specification writing and during contract execution.

All Coast guard drawings, technical publications, and standard specifications will be provided to contractors by the Coast Guard at an appropriate time, or upon request, free of charge. Other Government documents may be accessed – free of charge – from links located on the SFLC website. Commercial sites provide access to their respective documents.

COAST GUARD DRAWINGS

Coast Guard Drawing 154B WPC 085-201, Rev -, Propulsion System, SSDG, EDG Installation Drawings

Coast Guard Drawing 154-WPC 085-201 Rev A, Propulsion System, SSDG, EDG Installation Drawings

Coast Guard Drawing 154-WPC 151-301 Rev E, Scantlings Superstructure

Coast Guard Drawing 154-WPC 200-301 Rev -, Machinery Arrangement Drawings

Coast Guard Drawing 154-WPC 204-301 Rev F, Equipment Removal Plan

COAST GUARD PUBLICATIONS

Coast Guard Commandant Instruction (COMDTINST) M10360.3, Jun 2006, Coatings and Colors Manual

Coast Guard Technical Publication 8019 (TP-8019), Sections A, B, C, D, and E, Main Propulsion Engine MTU 20V4000M93L, Volume 1, 2, 3, 4, 5

Coast Guard Technical Publication 8902A (TP-8902A), Sections A, B, Technical Repair Standard, Depot Level, for use on Fast Response Cutter (FRC-B), Sentinel Class, Main Propulsion Diesel Engine, MC/OR and ETRAR Datasheets, MTU 20V4000M93L, Volume 1, 2

Fire Prevention and Response

Surface Forces Logistics Center Standard Specification 0000 (SFLC Std Spec 0000), Latest Version, General Requirements

Surface Forces Logistics Center Standard Specification 0740 (SFLC Std Spec 0740), Latest Version, Welding and Allied Processes

Surface Forces Logistics Center Standard Specification 5550 (SFLC Std Spec 5550), Latest Version,

Surface Forces Logistics Center Standard Specification 6310 (SFLC Std Spec 6310), Latest Version, Requirements for Preservation of Ship Structures

OTHER REFERENCES

Code of Federal Regulations (CFR) Title 29, Part 1915, Occupational Safety and Health Standards for Shipyard Employment

NAVSEA Technical Publication T9074-AD-GIB-010/1688, (TP 1688), July 2012, Requirements for Fabrication, Welding, and Inspection of Submarine Structure

CONSOLIDATED LIST OF GOVERNMENT-FURNISHED PROPERTY

The following is a list of property, which the Government will furnish. This list supersedes any other material obligations indicated or implied by referenced drawings.

WORK ITEM	MTI	ITEM DESCRIPTION	NSN/PN	QTY	ESTIMATED COST ($/UNIT)
1	Y	FRC MDE	NIIN: 0C 2815-12-392-7931	2	$1,861,153.95
1	N	FRC MDE Container	NIIN: 8145-01-F13-3476	2	$47,857.63
1	Y	Spreader Bar, Main Engine	NIIN: 01-F18-5444	1	$50,000.00
1	N	**Silencer Outlet Exhaust Expansion Joints	NIIN: 016244228 PN: 26-FSP-0005-15	2	29,778

***Government-loaned property, which shall be returned to the vessel upon completion of the availability.**
****New or refurbished equipment that the Government may provide for installation in place of existing equipment.**
*****Government-furnished property, which is to be supplied by either the vessel or the C4IT ServiceCenter**

CONSOLIDATED LIST OF CRITICAL INSPECTION ITEMS

The following is a list of work items, which contain Critical Inspection reports, which the Contractor must complete within the first 25% of the availability contract period (see SFLC Std Spec 0000, paragraph 3.2.6.5 (Inspection report particulars)):

Work Item	Title

This section is not applicable to this package.

PRINCIPAL CHARACTERISTICS

154' WPC (SENTINEL CLASS)	
PHYSICAL	
Anchor	ROCNA, anchor, 150 KG/ 331 LB, Stainless Steel
Bulkheads	(7), Watertight Bulkheads located below the Main Deck
Displacement, delivery, light ship	302 Metric Tons
Draft, full load	2.58 Meters (8.46 Feet)
End of service life displacement	353 Metric Tons
Framing	Longitudinal
Full load displacement	353 Metric Tons
Height of highest projection	17.22 Meters (56.5 Feet)
Length overall (loa)	46.80 Meters (153.5 Feet)
Maximum beam	7.75 Meters (25.43 Feet)
Minimum operating displacement	314 Metric Tons
Waterline length (lwl)	44.35 Meters (145.5 Feet)
HULL	
Hull/main weatherdeck material	AH-36 Steel
Superstructure	5456-H1111 Aluminum
MACHINERY	
Bow thruster	Schottel STT 60 LK
Diameter of propeller	1900 mm
Emergency service generator (edg)	Cummins 6BTA5.9-DM Diesel with Stanford 93KW Generator
Fin stabilizer	(2), Quantum QC1500
Main propulsion	(2), MTU 20V4000 M93L, Sequential Turbo-Charged Diesels
Number of blades	6
Number of propellers	(2) Michigan Wheel Marine
Propeller pitch capability	Fixed
Propulsion shafts	(2), Electralloy Nitronic 50HS (9430mm) Shafts
Reduction gears	(2), ZF 23560C/D Series
Rudders	(2), 316L Stainless Steel
Shaft rotations per minute	478
Shaft(s) bearing, aft	(2), Duramax Bearings
Shaft(s) bearing, intermediate	(2), Duramax Bearings
Shaft(s) diameter	8 Inches
Shaft(s) Seal	(2), Wartsila Mechanical Seals
Ship service generators	(2), Cummins QSM11-DM Diesels with Stanford 317KW Generator
TANK CAPACITIES AT 95% LIQUID LOAD (22,958 TOTAL GALLONS)	
Fresh water tank, port (3-38-2-w)	708 gal
Fresh water tank, stbd (3-38-1-w)	756 gal
Fuel oil edg day tank (1-10-1-f)	134 gal
Fuel oil gen. ovrflw tnk, ctr. (3-40-0-f)	1,159 gal
Fuel oil overflow tank, center (3-10-0-f)	616 gal
Fuel oil service tank, #1 port (3-17-2-f)	1,750 gal
Fuel oil service tank, #1 stbd (3-17-1-f)	1,750 gal
Fuel oil service tank, #2 port (3-40-2-f)	890 gal
Fuel oil service tank, #2 stbd (3-40-1-f)	890 gal
Fuel oil storage tank, #1 center (3-11-0-	5,040 gal

f)	
Fuel oil storage tank, #2 center (3-23-0-f)	5,350 gal
TANK CAPACITIES AT 95% LIQUID LOAD (22,958 TOTAL GALLONS)	
Grey water tank, (3-17-0-w)	2,668 gal.
Lube oil storage tank, (2-35-2-f)	146 gal.
Oily water tank, (3-34-1-w)	336 gal.
Sewage collection tank, (3-6-0-w)	429 gal.
Waste oil tank, (3-34-2-f)	336 gal.

General Requirements

1. SCOPE

1.1 Intent. This standard specification invokes general requirements for conducting vessel repairs performed by commercial contractors at a Coast Guard facility for Coast Guard vessels.

1.2 Term interchangeability. The terms 'Contractor', 'CG Yard', 'NAVSTA EVERETT', 'shipyard', 'Base', and 'Coast Guard Industrial' are used interchangeably in this specification. Where the primary service provider is Coast Guard personnel, references to contractor and other noted descriptors within this specification or within drawings, publications, SFLC Standard Specifications or other commercial and military references are deemed the same as prime service provider.

2. REFERENCES

COAST GUARD DRAWINGS

None

COAST GUARD PUBLICATIONS

Coast Guard Commandant Instruction (COMDTINST) M10360.3 (series), Coatings and Color Manual

Surface Forces Logistics Center Standard Specification 0000 (SFLC Std Spec 0000), Latest Version, General Requirements

Surface Forces Logistics Center Standard Specification 0740 (SFLC Std Spec 0740), Latest Version, Welding and Allied Processes

Surface Forces Logistics Center Standard Specification 5550 (SFLC Std Spec 5550), Latest Version,

Fire Prevention and Response

Surface Forces Logistics Center Standard Specification 6310 (SFLC Std Spec 6310), Latest Version, Requirements for Preservation of Ship Structures

OTHER REFERENCES

Code of Federal Regulations (CFR) Title 29, Part 1915, Occupational Safety and Health Standards for Shipyard Employment

NAVSEA Technical Publication T9074-AD-GIB-010/1688, (TP 1688), July 2012, Requirements for Fabrication, Welding, and Inspection of Submarine Structure

3. REQUIREMENTS

3.1 General. The Contractor must conform to all requirements specified in SFLC Std Spec 0000 and in this item, as applicable, during the performance of this availability. The requirements in this WI applies to all work under the scope of this contract, whether explicitly stated in all following work items or not, and to all other work subsequently authorized by changes, modifications, or extensions to the contract.

3.1.1 The Contractor must conform to all requirements specified in SFLC Std Spec 5550 and in the Fire Protection and Response work item, as applicable, during the performance of this availability.

3.1.1.1 Fire Safety Plan submission. The Contractor must submit a copy of the CFR 1915, Subpart P, Fire Safety Plan with the Contractor's bid when work will be conducted in a Contractor–owned facility. Include any MOA(s) with local firefighting facilities.

3.1.1.2 Fire Plan submission. The Contractor must submit a copy of the developed availability specific fire plan as requested in the Fire Protection and Response work item, with the Contractor's bid.

3.1.1.3 SFLC-PBPL Availabilities (87 WPB, 110 WPB, & 154 WPC). The Contractor must conform to SFLC Std Spec 5550 with the following amendments and supplements:

• For contracts executed at a Contractor's facility, submit (pre-award) the facility's Fire Safety Plan document described in 29 CFR 1915.502 – "Fire Safety Plan". For planning assume that Coast Guard personnel will not be available to fight a fire.

• For all contracts at all facilities, submit the following information pre-award, taking into consideration how the maintenance/repairs specified in the work items will affect uninterrupted operation of the subject systems; make all necessary amendments to this submission after discussions with the COR at the arrival conference and during contract execution as emerging conditions warrant: o Describe all anticipated needs for fire detection/alarm, fire-fighting, and shipboard lighting and communication systems supplementation (see bulleted paragraphs below) and a description of the proposed remedies/solutions (include pricing for maintaining capability in pre-award quote).

o Prior to performing weld repairs (or potentially the entire availability), the Coast Guard will be securing and electrically isolating the installed fire alarm system, in conjunction with performing other measures that will protect installed electronic systems that could be damaged by weld repairs; therefore the vessel's installed fire alarm/detection system will potentially not be available during the performance period. Provide a supplemental temporary fire-alarm system while the installed system is down. Monitor that system for the duration of its installation.

o Describe how any required temporary/supplemental fire detection/alarm systems will notify fire responders.

o Describe all anticipated breaches of the cutter's Fire Protection Boundaries and the proposed temporary solutions that will minimize impact on the Fire Protection Boundary's proper function (e.g. removal of cables/hoses/etc. at the end of work day or installation of quick disconnects, installation of temporary fire curtains, etc.).

• Whenever maintenance/repairs described in work items or Change Requests necessitate securing, or making inoperable, all or part of the vessel's fire detection or fire alarm system, submit a proposal to the COR/KO describing an equivalent method(s) for temporarily maintaining all lost functionality of the system(s). Select the most economical option(s) available (i.e. for extended loss of service of the entire system the temporary fire detections/alarm system described in SFLC Std Spec 5550 may be the best option, for shorter durations temporary

watch standers may be more economical, etc.). After the COR has agreed to the proposal, maintain the capability of these systems for the duration of the contract to the greatest practicable extent.

• Whenever maintenance/repairs described in work items or Change Requests necessitate securing, or making inoperable, all or part of the vessel's firefighting (e.g. fire main system, P100 and other dewatering systems, halon systems, portable fire extinguishers, etc.), lighting, and communications systems, submit a proposal to the COR/KO describing equivalent method(s) for temporarily maintaining all lost functionality of the system(s). Select the most economical option(s) available. After the COR has agreed to the proposal, maintain fire detection/alarm/fighting and lighting/communications capability for the duration of the contract to the greatest practicable extent.

• All Fire Protection Boundaries must be left intact and functional at all times to the greatest practicable extent. Notify the COR in writing whenever a breached Fire Protection Boundary will be left unattended outside of normal working hours (e.g. a door/hatch is made un-closable/un-securable due to repair work, an access cut is made into deck/bhd that is part of a Fire Protection Boundary, etc.). When a Fire Protection Boundary must be breached to facilitate contract work, minimize the impact using industry-standard methods (e.g. fire curtains, quick-disconnect fittings, etc.)

NOTE

NAVSEA drawings listed will be available FOR INSPECTION ONLY from the Coast Guard Port Engineer post-award. SFLC will not redistribute NAVSEA documents. Contractors can apply to NAVSEA headquarters directly for copies.

3.2 Contractor-provided fire watch personnel. The Contractor must provide fire watch personnel and equipment.

3.3 Preservation requirements. The Contractor must accomplish all preservation tasks, including touch-ups, in accordance with SFLC Std Spec 6310.

3.3.1 Brand name approval. Ensure that all contractor-furnished coatings are in accordance with SFLC Std Spec 6310, Appendix C (Authorized Coatings for Use on Cutters and Boats).

3.3.2 Coating colors and system color schemes. The Contractor must obtain a written KO authorization to deviate from any coatings required in SFLC Std Spec 6310 Appendix C before work.

3.3.3 In-process quality control measures. The Contractor must abide by all the safety, preservation, and quality control requirements specified in SFLC Std Spec 0000, paragraph 3.2.4.2 (In-process QC measures for "critical-coated surfaces").

3.3.3.1 Quality control requirements. The Contractor must abide by the following when performing preservation related inspections. The following measurements must be randomly spaced throughout for the purposes of providing a representation of the entire prepared or coated surface.

3.3.3.1.1 Surface profile measurements. One surface profile measurement must be taken for every 200 square feet for the first 1000 square feet; for each additional 500 square feet or less, one profile measurement must be taken. Profile measurements must be taken in accordance with SFLC Std Spec 6310, paragraph 3.1.8.3 (Surface profile measurements). A "measurement" for surface profile is defined as follows:

- ASTM D4417, Method B: One profile measurement is the average (mean) of 10 individual readings.
- ASTM D4417, Method C: One profile measurement is the average (mean) of 2 individual readings.

3.3.3.1.2 Soluble salt conductivity measurements. 5 conductivity measurements must be taken every 1000 square feet. For submerged (immersed) applications conductivity measurements must not exceed 30 microsiemens/cm. For non-submerged (non-immersed) applications conductivity measurements must not exceed 70 microsiemens/cm. If a conductivity check fails, clean the surface in accordance with SFLC Std Spec 6310, paragraph 3.1.8.5 (Soluble salt removal).

3.3.3.1.3 Coating thickness measurements. Three area measurements must be taken for the first 1000 square feet; for each additional 1000 square feet, perform an additional area measurement. A "measurement" for coating thickness is defined as follows:

- SSPC-PA 2 defines an area measurement as 5 separate spot measurements randomly spaced throughout a 100 square foot area.
- SSPC-PA 2 defines a spot measurement as 3 gage readings and each new gage reading the probe must be moved to a new location within a 1.5-inch diameter circle defining the spot.

3.4 Welding and brazing requirements. The Contractor must perform all welding and allied processes, and NDE in accordance with SFLC Std Spec 0740.

3.4.1 HY-130 material substitution. The Contractor must be aware that HY-130 steel plating is no longer commercially available. For the purpose of performing flight deck repairs on US Coast Guard WMEC-270 "B-Class" cutters, Strenx 900 steel plating has been approved as a replacement for HY-130. Due to the similarity in material properties and weldability of HY-130 and Strenx 900, all welding procedures and welder qualifications for welding Strenx 900 must be the same as those outlined in NAVSEA TP 1688 as applicable for welding HY-130.

3.4.2 Standard spec modification. For any welding involving HY-130 on the flight deck of WMEC-270 "B-Class" cutters, perform all welding and allied processes, and non-destructive evaluation (NDE) in accordance with NAVSEA TP 1688. The Contractor must be aware that the welding requirements specified in this document take precedence over paragraph 3.3.6 of SFLC Standard Spec 0000 for the purpose of welding involving HY-130.

3.4.3 Approval to weld HY-130. To obtain Coast Guard approval to weld on HY-130 steel for WMEC-270 "B-Class" cutters, the Contractor must provide written Performance Qualification Records (PQR's) for each process to be used. The PQR's must be approved by one of the regulatory agencies affirming that the WPS meets the welding requirements of NAVSEA TP 1688. In addition, the Contractor must ensure that all subcontractors, prior to performing welding operations, have qualified procedures by meeting all the requirements set forth in this document.

NOTE

NAVSEA approval is NOT required for welding procedures submitted but the procedures must be reviewed and shown to satisfy the requirements set forth in NAVSEA TP 1688, by a welding regulatory agency. The requirements for welding Strenx 900 are considered the same as those for welding HY-130.

3.5 Environmental protection requirements. The Contractor must adhere to the following environmental protection requirements in accordance with the SFLC Stand Spec 0000:

3.5.1 Contractor operated (non USCG) facilities. The Contractor must provide and maintain environmental protection as defined in SFLC Std Spec 0000 Appendix A, Requirements for Environmental Protection at Contractor Operated (Non USCG) Facilities, as applicable, during the performance of this availability. Contractor must plan for and provide environmental protective measures to control pollution that develops during normal practice, as well as plan for and provide environmental protective measures required to correct conditions that

develop during the project. Contractor must comply with applicable Federal, state, and local laws, codes, ordinances, and regulations in their entirety. Any reference to a specific portion of a Federal, state, or local law, code, ordinance, or regulation in this or any other item must not be construed to mean that relief is provided from any other sections of the law, code, ordinance, or regulation.

3.5.1 USCG facilities. The Contractor must provide and maintain environmental protection as defined in SFLC Std Spec 0000 Appendix B, Requirements for Environmental Protection at USCG Facilities, during the performance of this availability. Contractor must plan for and provide environmental protective measures to control pollution that develops during normal practice, as well as plan for and provide environmental protective measures required to correct conditions that develop during the project. Contractor must comply with applicable Federal, state, and local laws, codes, ordinances, and regulations in their entirety. Any reference to a specific portion of a Federal, state, or local law, code, ordinance, or regulation in this or any other item must not be construed to mean that relief is provided from any other sections of the law, code, ordinance, or regulation.

3.5.1.1 USCG Generator status. The activity Generator Status for the Coast Guard Facility is Low.

3.5.1.2 Plans and permits. The CG Facility has unit specific permits including the following:

- Spill Prevention Control and Countermeasures (SPCC) Plan: Unit has a SPCC Plan which requires certain unit-specific procedures be followed for the storage, inspection, and transfer of petroleum products in containers 55 gallons or greater.
- National Pollutant Discharge Elimination System (NPDES) Storm Water (SW) Permit: Unit has an NPDES SW permit which requires unit-specific procedures be followed for the storage and inspection of equipment and materials which may contribute contaminants to storm water discharges.
- Air Emission Permit: Unit has an Air Emission Permit which requires unit-specific procedures be followed for the emissions of VOCs and hazardous air pollutants.

3.5.2 Test and procedures. The Contractor is required to promptly conduct tests and procedures for the purpose of assessing whether operations are in compliance with applicable Environmental Laws. Analytical work must be done by qualified laboratories; and where required by law, the laboratories must be certified.

3.5.3 Regulatory notifications. The Contractor is responsible for all regulatory notification requirements in accordance with Federal, State and local regulations. In cases where the Coast Guard must also provide public notification, such as storm water permitting, the Contractor must coordinate with the Contracting Officer or COR, and if work is being performed at a USCG Facility, the local Facility Engineer or Engineering Officer. The Contractor must submit copies of all regulatory notifications to the Contracting Officer and the local Facility Engineer or Engineering Officer prior to commencement of work activities. Regulatory notifications must be provided for including but not limited to demolition, renovation, National Pollutant Discharge Elimination System (NPDES) defined site work, and remediation of controlled substances such as asbestos, hazardous waste, and lead paint.

3.5.4 Environmental manager. The Contractor must appoint in writing an Environmental Manager for the project, who is responsible for coordinating Contractor compliance with Federal, State, local, and station environmental requirements. The Environmental Manager must ensure compliance with Hazardous Waste Program requirements, including hazardous waste handling, storage, manifesting, and disposal; implement the Contractors' Environmental Management Plan; ensure that all environmental permits are obtained, maintained, and closed out; ensure compliance with Storm Water Program Management requirements; ensure compliance with Hazardous Materials including storage, handling, and reporting requirements; as well as coordinate any remediation of regulated substances such as lead, asbestos, and polychlorinated biphenyl (PCB). This may be a collateral position; however the individual must be trained to accomplish the following duties; ensure waste segregation and storage compatibility requirements are met; inspect and manage Satellite Accumulation areas; ensure only

authorized personnel add wastes to containers; ensure all Contractor personnel are trained in 40 CFR requirements and individual position requirements; coordinate removal of waste containers; and maintain the Environmental Records binder and required documentation, including environmental permits compliance and close-out.

3.5.5 HW disposal. Contractor must comply with SFLC Std Spec 0000 Appendix B, Requirements For Environmental Protection At USCG Facilities for HW disposal, and ensure that waste removals are conducted during normal business hours (0800-1600) on Monday through Friday (excluding holidays).

3.5.6 Additional Requirements. The Contractor must be aware of the following:

3.5.6.1 No Contractor or Subcontractor must have the authority to sign a Hazardous Waste Manifest using the Coast Guard facility's EPA Generator ID Number or remove contract generated hazardous waste from the Coast Guard facility without COR or KO-approval.

3.5.6.2 Local environmental regulations at the Government facilities may be more stringent. As with all environmental regulations, the Contractor must prepare for and comply with local and state regulations.

3.5.6.3 Coast Guard facilities do not maintain Facilities Response Plans (FRPs) per 33 CFR 154. Contractor must furnish the FRP when required for over-the-water liquids transfers to and from vessels, and is required for oil/fuel transfers to/from vessels for 250 barrels (10,500 gallons) or more.

3.6 Local Policy. The Contractor must refer to site (e.g., Base) Regulations and Instructions for details regarding local policies (e.g., crane services, parking, or facility usage).

3.7 SFLC Standard Specification approved changes. Approved updates to the 2022 SFLC Standard Specifications will appear here.

3.7.1 SFLC Standard Specification 5550: Replace paragraph 3.11.3 to state, "Material supporting imminent work shall be brought on the cutter and stored where the work is being performed. Material that appreciably contributes to fire load shall be removed at the end of each work shift when personnel are not present. Trash, debris, and packaging materials shall be promptly removed from the vessel at the end of each work shift and not allowed to accumulate." Advance the paragraph numbering of the Fire Prevention and Safety Inspection form to 3.11.4.

4. NOTES

4.1 QA inspection forms. QA inspection forms (QA-1 thru QA-5), required in SFLC Std Spec 6310 to be completed and submitted during preservation of "critical-coated surfaces", are provided at the end of this document.

USCGC OLIVER HENRY (WPC-154) UNPLANNED DOCKSIDE AVAILABILITY FY2026

QA-1 - QUALITY ASSURANCE INSPECTION FORM

(PRESERVATION CHECKLIST)

VESSEL NAME	HULL #	WORK ITEM #	WORK ITEM TITLE
LOCATION OF WORK (INCL. FRAME #'S)			**AREA (SQFT)**

CHECKPOINT 1 – COATING SYSTEM COMPLIANCE	
	Ensure all coatings are in compliance with SFLC Std Spec 6310, Appendix C.
CHECKPOINT 2 - PAINT STORAGE	
	Ensure all coatings are kept at a temperature of 65 to 85°F at all times, unless otherwise specified by the coating mfg.
CHECKPOINT 3 - AMBIENT CONDITIONS	
	Ensure surface and surrounding temperatures are each between 50 and 90°F for water-containing coatings, and 35 and 95°F for other coatings, unless otherwise specified by the coating manufacturer(s).
	Ensure maximum relative humidity (RH) is as follows, from surface preparations through final curing of topcoat: 50% for tanks, voids, and vent plenum; and 85% for all other areas, unless otherwise specified by manufacturer(s).
	Ensure surface temperature is at least 5°F above the dew point, unless otherwise specified by the coating mfg.
CHECKPOINT 4 - PRE-SURFACE PREPARATION	
	Remove surface contaminants (soluble salts, loose rust, mud, and marine growth) with low pressure fresh water wash down (maximum 5,000 psi). If oil and grease are present, perform solvent cleaning, as per SSPC SP-1.
	Verify equipment setup, blast media, and surface preparation methods match designated test coupon.
CHECKPOINT 5 - SURFACE PREPARATION	
	Verify environmental conditions (see CHECKPOINT 3).
	Ensure cleanliness of prepared surface is as per specification (i.e.: SSPC SP-11, SP-10, SP WJ-2…).
	Verify surface anchor profile using ASTM D4417-Methods B or C against SFLC Std Spec 6310. Conduct profile readings at a minimum of 5 locations for the first 1000-sqft area, and 2 locations for each succeeding 1000-sqft area.
	Measure soluble salt conductivity in accordance with SSPC-Guide 15. Conduct 5 measurements per each 1000-sqft area (max. threshold: 70 microsiemens/cm for non-submerged surfaces, 30 microsiemens/cm for submerged surfaces).
CHECKPOINT 6 - PRIMER COAT APPLICATION	
	Verify environmental conditions (see CHECKPOINT 3).
	Verify proper mixing and stand-in (induction) times.
	Ensure no paint is applied when the temperature is expected to drop to freezing before the paint has dried.
	Ensure surfaces are completely dry, unless otherwise allowed by the coating manufacturer(s).
	Verify wet film thickness (WFT) at random, to prevent under or over application. Verify final DFT.
	Brush out all runs, sags, drips, and puddles.
	Perform visual inspection for holidays and other defects.
CHECKPOINT 7 – STRIPE COAT APPLICATION	
	Verify environmental conditions (see CHECKPOINT 3).
	Ensure overcoating window is as per manufacturer's instructions.
	After primer coat (mist coat after inorganic zinc), brush-apply un-thinned coat of same primer paint over edges, weld seams, cut-outs, and areas of complex geometries @ 3-4 mils wet film thickness (WFT).
CHECKPOINT 8 – TOP COAT APPLICATION	
	Verify environmental conditions (see CHECKPOINT 3).
	Ensure overcoating window is as per manufacturer's instructions.
	Verify proper mixing and stand-in (induction) times, as applicable.
	Verify wet film thickness at random, to prevent under or over application.
	Brush out all runs, sags, drips, and puddles.
CHECKPOINT 9 – FINAL INSPECTION	
	Verify final system dry film thickness. Conduct 5 sets of 3 readings for each of the first 3 100-sqft areas, followed by 5 sets of 3 readings for each succeeding 1000-sqft area.
	Ensure that system cure is in accordance with manufacturer's recommendation for intended service.
	Ensure potable water tank exhaust ventilation is maintained continuously from and during coating application through final system cure, to exhaust all solvent to the atmosphere and to prevent solvent entrapment.
	For immersion coatings (including tank U/W body), record date and time of the following events: Final coat application: _____/_____; Return to service or removal from environment controls: _____/_____
CHECKPOINT 10 – RECORD KEEPING	
	Complete, sign, and submit all provided QA Inspection Forms.

NAME OF QP-1/AMPP INSPECTOR	SIGNATURE	CERT. #	DATE / TIME
NAME OF CG REPRESENTATIVE	**SIGNATURE**	**UNIT**	**DATE/TIME**

QA-2 - QUALITY ASSURANCE INSPECTION FORM
(ENVIRONMENTAL READINGS)

VESSEL NAME	HULL #	WORK ITEM #	WORK ITEM TITLE

Use one sheet for each activity. Record conditions every four hours from before surface preparation to application of final coating system coat.

DATE & TIME	ACTIVITY (SURFACE PREPARATION, PRIMER COAT, BARRIER COAT, TOP COAT, ETC…)	LOCATION (FRAME & DECK, RELATION TO EQUIPMENT, ETC.)	TEMPERATURE				% REL. HUMID-ITY
			DEW PT.	SURFACE	AMBIENT	ΔT | DP - SURFACE |	

NAME OF QP-1/AMPP INSPECTOR	SIGNATURE	CERT. #	DATE / TIME
NAME OF CG REPRESENTATIVE	**SIGNATURE**	**UNIT**	**DATE/TIME**

QA-3a - QUALITY ASSURANCE INSPECTION FORM
(SURFACE PROFILE LOG FOR PROFILE MEASUREMENTS IAW ASTM D4417-METHOD-C)

VESSEL NAME	HULL #	WORK ITEM #	WORK ITEM TITLE
LOCATION OF WORK (FRAME REFERENCES)			**AREA (SQFT)**

SURFACE PREPARATION METHOD		PROFILE ACHIEVED (MILS)		
		MIN	MAX	MEAN
SSPC-SP-10/AMPP No. 2	☐			
SSPC-SP WJ-2/AMPP WJ-2	☐			
SSPC-SP-3	☐			
SSPC-SP-11	☐			
SSPC-SP-11 (inaccessible area)	☐			
Brush-blasting (non-metallic substrate)	☐			
ABRASIVE MANUFACTURER:		**ABRASIVE SIEVE SIZE:**		

PLACE SURFACE PROFILE REPLICA TAPES IN THE SPACES PROVIDED BELOW, TO SERVE AS PERMANENT QA RECORD. MAINTAIN A SEPARATE LOG FOR EACH LOCATION. WHEN AN AREA IS DIVIDED INTO SEPARATE SECTIONS, MAINTAIN A SEPARATE LOG FOR EACH SECTION.		
Place Surface Profile Replica Tape Here	Place Surface Profile Replica Tape Here	Place Surface Profile Replica Tape Here
Reading (mils):	Reading (mils):	Reading (mils):
Place Surface Profile Replica Tape Here	Place Surface Profile Replica Tape Here	Place Surface Profile Replica Tape Here
Reading (mils):	Reading (mils):	Reading (mils):
Place Surface Profile Replica Tape Here	Place Surface Profile Replica Tape Here	Place Surface Profile Replica Tape Here
Reading (mils):	Reading (mils):	Reading (mils):
Place Surface Profile Replica Tape Here	Place Surface Profile Replica Tape Here	Place Surface Profile Replica Tape Here
Reading (mils):	Reading (mils):	Reading (mils):
Place Surface Profile Replica Tape Here	Place Surface Profile Replica Tape Here	Place Surface Profile Replica Tape Here
Reading (mils):	Reading (mils):	Reading (mils):
MEAN MIL READING (IAW ASTM D4417-METHOD C) FOR ABOVE 15 READINGS:		

NAME OF QP-1/AMPP INSPECTOR	SIGNATURE	CERT. #	DATE / TIME
NAME OF CG REPRESENTATIVE	**SIGNATURE**	**UNIT**	**DATE/TIME**

QA-3b - QUALITY ASSURANCE INSPECTION FORM
(SURFACE PROFILE LOG FOR PROFILE MEASUREMENTS IAW ASTM D4417-METHOD-B)

VESSEL NAME	HULL #	WORK ITEM #	WORK ITEM TITLE
LOCATION OF WORK (INCL. FRAME #'S)			**AREA (SQFT)**

SURFACE PREPARATION METHOD		PROFILE ACHIEVED (MILS)		
		MIN	MAX	MEAN
SSPC-SP-10/AMPP No. 2	☐			
SSPC-SP WJ-2/AMPP WJ-2	☐			
SSPC-SP-3	☐			
SSPC-SP-11	☐			
SSPC-SP-11 (inaccessible area)	☐			
Brush-blasting (non-metallic substrate)	☐			
ABRASIVE MANUFACTURER:		**ABRASIVE SIEVE SIZE:**		

RECORD MEASUREMENTS TAKEN IN THE SPACES PROVIDED BELOW, TO SERVE AS PERMANENT QA RECORD. MAINTAIN SEPARATE LOG FOR EACH LOCATION. WHEN AN AREA IS DIVIDED INTO SEPARATE SECTIONS, MAINTAIN A SEPARATE LOG FOR EACH SECTION.					
Reading (mils):					
Reading (mils):					
Reading (mils):					
Reading (mils):					
Reading (mils):					
Reading (mils):					
Reading (mils):					
Reading (mils):					
Reading (mils):					
Reading (mils):					
Mean Mils Reading (IAW ASTM D4417-Method B for above 10 readings (by column):					
Mean Reading (mils)					

NAME OF QP-1/AMPP INSPECTOR	SIGNATURE	CERT. #	DATE / TIME
NAME OF CG REPRESENTATIVE	**SIGNATURE**	**UNIT**	**DATE/TIME**

QA-4 - QUALITY ASSURANCE INSPECTION FORM
(SURFACE SOLUBLE SALT CONDUCTIVITY LOG)

VESSEL NAME	HULL #	WORK ITEM #	WORK ITEM TITLE
LOCATION OF WORK (INCL. FRAME #'S)			AREA (SQFT)

SOLUBLE SALT CONDUCTIVITY MEASUREMENTS IAW SSPC-GUIDE 15.		
DATE	TEST LOCATIONS	CONDUCTIVITY (MICROSIEMENS/CM)

NAME OF QP-1/AMPP INSPECTOR	SIGNATURE	CERT. #	DATE / TIME
NAME OF CG REPRESENTATIVE	SIGNATURE	UNIT	DATE/TIME

QA-5 - QUALITY ASSURANCE DATA FORM
(COATING THICKNESS)

(Use one sheet for each sequence)

VESSEL NAME	HULL #	WORK ITEM #	WORK ITEM TITLE

COATING MFG	PRODUCT NAME	BATCH #	INDUCTION TIME	COATING SYSTEM SEQUENCE (PRIMER/TOUCHUP/3RD COAT, ETC.)

DRY FILM THICKNESS (DFT) MEASUREMENTS IAW SSPC-PA 2.						
SPOT	1	2	3	4	5	AVERAGE VALUE
*BASE METAL READING (BMR)						
*Required, If Magnetic Pull-Off (Type I/Banana) Gauge Is Used.						

LOCATION (FRAME REFERENCE):								
SPOT	1	2	3	4	5	OVERALL AVG. DFT	ADJUSTMENTS	
1							AVG. BMR	DEVIATION
2								
3						BEFORE ADJUSTMENTS	AFTER ADJUSTMENTS	
AVG.								
LOCATION (FRAME REFERENCE):								
SPOT	1	2	3	4	5	OVERALL AVG. DFT	ADJUSTMENTS	
1							AVG. BMR	DEVIATION
2								
3						BEFORE ADJUSTMENTS	AFTER ADJUSTMENTS	
AVG.								
LOCATION (FRAME REFERENCE):								
SPOT	1	2	3	4	5	OVERALL AVG. DFT	ADJUSTMENTS	
1							AVG. BMR	DEVIATION
2								
3						BEFORE ADJUSTMENTS	AFTER ADJUSTMENTS	
AVG.								

APPLICATION METHOD (AIRLESS, CONVENTIONAL SPRAY, ROLLED)	AVERAGE DFT

NAME OF QP-1/AMPP INSPECTOR	SIGNATURE	CERT. #	DATE / TIME
NAME OF CG REPRESENTATIVE	SIGNATURE	UNIT	DATE/TIME

4.2 Tank and Void Assessment form.

SFLC-ESD-25	TANK AND VOID ASSESSMENT FORM
PRINT RESET	

GENERAL DATA	Note: Use SFLC-ESD-29 for Compartments other than Tanks & Voids.		
Inspector's Name:	Organization:	Contact Info:	
Cutter Name:	Cutter Class:	Hull:	
Tank:	Service:	Tank Area:	Gallons:
Solid Balast:	Access Compt:	Date:	Assessment Reason:

ACCESS DATA	
Manhole and cover condition:	Tank Penetration Condition:

VENT OVERFLOW DATA		
Present: ◯Yes ◯ No	Check Valve Installed: ◯Yes ◯No	Check Valve Operates Properly: ◯Yes ◯No

LADDER DATA		
NR of Ladder(s) Present: ◯Yes ◯No	Ladder Damaged: ◯Yes ◯No	Ladder Material:

TANK LEVEL INDICATOR (TLI) DATA		
TLI Present in Tank: ◯Yes ◯No	TLI Damaged: ◯Yes ◯No	TLI Type:

SOUNDING TUBE DATA	
Sounding Tube Present in Tank: ◯Yes ◯No	Sounding Tube Damaged: ◯Yes ◯No
Striker Plate Damaged (>50%): ◯Yes ◯No	

CATHODIC PROTECTION DATA		
Cathodic Protection in Tank: ◯Yes ◯No	Total Zincs:	Number of Zincs > 50% Depleted:

	1-6		Cleanliness & Housekeeping
Clean to light layer or residue		1-2 (G)	Comments:
Loose accumulation scale		3-4 (Y)	
Impending residue and sediments		5-6 (R)	

	%	1-6		Coating Systems
All Painted Surfaces			1-2 (G)	Comments:
			3-4 (Y)	
			5-6 (R)	

	%	1-6		Structural
Corrosion			1-2 (G)	Comments:
			3-4 (Y)	
			5-6 (R)	
Pitting & Grooving			1-2 (G)	Comments:
			3-4 (Y)	
			5-6 (R)	

Page 1 of 2 18MAR2015

SFLC-ESD-25	TANK AND VOID ASSESSMENT SHEET
PRINT	

Structural Integrity Data					
Estimated Total Linear Feet of Structure Requiring Repair:			Estimated Total Square Feet of Plating Requiring Repair:		
Cracks/ Fractures Present:	◯ Yes	◯ No	Buckling/Deflections/ Distortions Present:	◯ Yes	◯ No
Holes Present:	◯ Yes	◯ No	Material Wastage Present:	◯ Yes	◯ No
All Welds Intact:	◯ Yes	◯ No	Structural Evaluation Recommended:	◯ Yes	◯ No

PHOTOGRAPHS

Pictures Taken (enter quantity):

Note: To add pictures to this form, Work Station must have Adobe Acrobat (not Reader) installed.
Add all photos and photo comments to a word document and save file. Open this form and click "Combine Files". Add the document with photos you've just saved and save as a new combined .pdf files.

Additional Comments:

Page 2 of 2 18MAR2015

WORK ITEM 1: MDEs, Renew

1. SCOPE

1.1 Intent. This work item describes the requirements for the Contractor to renew both 154 WPC MDEs.

1.2 Government-furnished property.

MTI	ITEM DESCRIPTION	NSN/PN	QTY	ESTIMATED COST ($/UNIT)
Y	FRC MDE	NIIN: 0C 2815-12-392-7931	2	$1,861,153.95
N	FRC MDE Container	NIIN: 8145-01-F13-3476	2	$47,857.63
Y	Spreader Bar, Main Engine	NIIN: 01-F18-5444	1	$50,000.00
N	**Silencer Outlet Exhaust Expansion Joints	NIIN: 016244228 PN: 26-FSP-0005-15	2	29,778

2. REFERENCES

COAST GUARD DRAWINGS

Coast Guard Drawing 154-WPC 085-201 Rev A, Propulsion System, SSDG, EDG Installation Drawings

Coast Guard Drawing 154B WPC 085-201, Rev -, Propulsion System, SSDG, EDG Installation Drawings

Coast Guard Drawing 154-WPC 151-301 Rev E, Scantlings Superstructure

Coast Guard Drawing 154-WPC 200-301 Rev -, Machinery Arrangement Drawings

Coast Guard Drawing 154-WPC 204-301 Rev F, Equipment Removal Plan

COAST GUARD PUBLICATIONS

Surface Forces Logistics Center Standard Specification 0000 (SFLC Std Spec 0000), 2020, General Requirements

Coast Guard Technical Publication 8019 (TP-8019), Sections A, B, C, D, and E, Main Propulsion Engine MTU 20V4000M93L, Volume 1, 2, 3, 4, 5

Coast Guard Technical Publication 8902A (TP-8902A), Sections A, B, Technical Repair Standard, Depot Level, for use on Fast Response Cutter (FRC-B), Sentinel Class, Main Propulsion Diesel Engine, MC/OR and ETRAR Datasheets, MTU 20V4000M93L, Volume 1, 2

OTHER REFERENCES

None.

3. REQUIREMENTS

3.1 General. The Contractor must perform and abide by the following.

3.1.1 Refer to TP-8019 and Coast Guard Drawings 154-WPC 085-201, 154-WPC 200-301, 154-WPC 204-301.

3.1.2 Qualifications. At least one technician on site must be QL3 certified on MTU4000 series engines, must possess a 1B dongle certification on ECU-7 series governor, and the Contractor must have 20V4000M93L engine prior maintenance experience.

3.1.3 Protective measures - general. Furnish and install all protective coverings to seal off and protect all non-affected vessel's components, equipment, and spaces in the vicinity of the work area against contamination during the performance of work. Upon completion of work, remove all installed protective measures, inspect for the presence of contamination, and return all contaminated equipment, components, and spaces to original condition of cleanliness.

3.1.4 Interferences. The Contractor must handle all interferences in accordance with SFLC Std Spec 0000, paragraph 3.3.5 (Interferences).

3.1.5. Removal and Reinstallation Plan. In conjunction with, and incorporated into, the submission of the PD per paragraph 3.5.2 of SFLC STD SPEC 0000, prepare and submit detailed removal and reinstallation plans that contain the following. After the final version of the PD is approved by the Coast Guard work may commence.

- An “Interference Removal/Reinstallation and Access Cut Plan” containing a list of items that will be removed as interferences. Describe measures that will be taken to prevent contamination/water/etc. from entering the cutter, and measures that will ensure ship’s structure will not deform after removal of the WERP plates. Describe the control welding techniques that will be used to ensure the WERP plates and adjacent structure will not be warped or damaged, and that final weldment will not crack.
- A “Cutter Stability Plan” containing a description of measures that will be taken to ensure the stability characteristics described below in para 3.2.2.2. Ensure cutter stability parameters are maintained.
- A “Rigging Plan” containing type and rating of crane and a step-by-step description of the rigging evolution. Describe all lifting appliances (e.g. strong-backs, jigs, etc.) that will be used.
- An “Engine Installation and Alignment Plan” containing a brief description of how the new engines will be reconnected to all disturbed interfaces and how the new engines will be aligned/connected to all hard-points (e.g. reduction-gear flange, inlet/exhaust ppg, water ppg, etc.). Describe how engine feet will be removed and reinstalled onto rails, and to what extent Chock-fast liners will be disturbed and why. Describe what types of alignment jigs, instruments, and tools will be used (e.g. laser, dial indicator, etc.)
- An “Operational Test Plan” containing an outline of all of the procedural steps required to fully prove a satisfactory install of the two new engines.
- A “Preservation Plan for F-Condition Engines” that outlines the steps that will be taken to package, preserve, and seal-off the removed engines

3.1.6 Operational test - initial. Prior to commencement of work, witness Coast Guard personnel perform an operational pre-test of all items and shipboard devices to be disturbed, used, repaired, or altered, to demonstrate existing operational condition. Inspect engine room bilge areas to determine extent of failed coatings. Prior to engine renewal submit a CFR that details any required growth repairs identified during the operational test based on the observed condition of the systems.

3.1.7 Inspection/Verification Sign-off Sheet. The Contractor must print off and maintain the sign-off sheet shown beneath paragraph 4.1 titled "FRC Engine Change Out Inspection/Verification Form" (or create and maintain an equivalent sheet). Immediately after completion of the predecessor task notify the COR/PE of the pending inspection, show and describe to the COR/PE the items requiring inspection and approval, then pending satisfactory inspection by the COR/PE, have the COR/PE sign the sheet to certify satisfactory completion of the task. Proceed with follow-on tasks only after receiving COR/PE witness, approval, and signature. Submit the filled-out sign-off sheet with the final testing CFR (described beneath paragraph 3.2.8) as certification that a Government representative was present for all listed inspections.

3.1.9 CG-Site Specific Requirements and Restrictions. The Contractor shall be aware the following requirements and/or restrictions are applicable for MDE renewals accomplished at BASE GUAM

3.1.9.1 Base Guam.

3.1.9.1.1 Potential Transport of GFP. GFP (e.g. engines, containers, etc.) may require additional handling (e.g. transport from a barge to pier, from elsewhere on the base to the worksite, etc.). If the GFP is not in close proximity to the work site at the start of the availability, the Contractor shall submit a CFR requesting contract modification and additional funding. The KO will release a CR to have the Contractor move the GFP into close proximity of the worksite.

3.2 Engine Renewal Requirements. The Contractor must renew both MDEs by performing and abiding by the following. Refer to TP-8902A, Chapter 2 and Chapter 40 for Shipboard Removal and Installation Requirements.

NOTE

Ship's Force will perform electrical isolation, tag-out procedures, etc. Coordinate with Ship's Force and ensure all of this work is complete prior to performing any maintenance.

Coordinate with Ship's Force and the COR/PE to schedule pre-engine-removal sea trials for collecting preliminary test data on.

3.2.1 Conduct preliminary inspections and tests. Conduct the preliminary tests specified in TP-8902A, Chapter 2.

3.2.2 Remove interferences and prepare for engine rigging evolution. While removing all interferences, and in conjunction with engine removal/reinstallation, perform the following.

3.2.2.1 General. Take all necessary precautions to prevent all environmental elements (e.g. rain, birds, dirt, etc.) from entering the skin of the cutter while the WERP deck plates are removed. This may involve temporary installation of cofferdams around accesses openings, tents/shelters, etc. or other equivalent methods.

3.2.2.2 Maintain cutter stability parameters. Throughout the entire contract 1) maintain, at a minimum, lightship stability conditions, and 2) maintain a list small enough to allow direct vertical rigging of engines out of the ship with no need to apply a significant horizontal force to guide the engines in/out (e.g. pulling/guiding engine with tag lines, pushing engine, etc), refer to TP-8902A, Chapter 2. This will involve installation and adjustment of shoring and weights, or an equivalent method. Main deck loading must not exceed 1000 lbs per sqft.

3.2.2.3 WERP removal and reinstallation requirements. Maintain the dimensions of the clear opening created after WERPs are removed by install temporary structural members that will prevent all deformation of the superstructure that may occur after removing WERP plates in accordance with the approved "Removal and Reinstallation Plan" (NOTE: Post WERP removal expansion of the clear opening has been noted in the past and must be prevented.). Coordinate with the COR/PE 24 hours in advance of inspection of the installed temporary structural members and prior to removal of any WERP plate weld joint material, proceed with WERP removal after satisfactory COR/PE inspection of temporary structure. Minimize damage to WERP plate and surrounding structure by only removing existing weld joint material that attaches the WERP plate to the 01 LVL Deck. First saw/grind down into the weld joint approximately 1/8", then carefully sever the remaining weld (approx 1/16") using a chisel or equivalent method/tool to release the WERP plate from the 01 LVL Deck. Inspect WERP foundation bar for any damage that will require repairs before final WERP installation. Submit CFR. At reinstallation employ control welding to the greatest practicable extent to ensure no latent defects (e.g. cracks, warping, etc. at a later date).

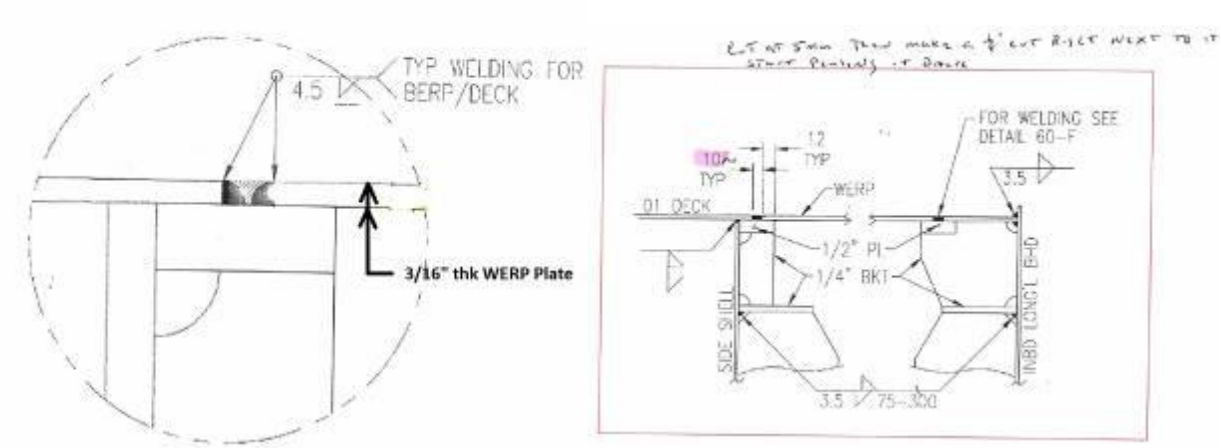

3.2.3 Prepare installed intake/exhaust ducts and engines for removal. Prior to disturbing engine intake and exhaust ducts, secure (i.e. "cage") all spring-loaded expansion joints (e.g. clamp together with turn buckles, etc. or equivalent method) to prevent release from their pre-disassembly dimensions/adjustment and label their locations. Measure and record all exhaust hanger distances prior to disassembly to aid in efficient reassembly and exhaust alignment.

3.2.4 Inspect engine intake ducts and exhaust ducts. Coordinate with the COR/PE 24 hours in advance of the inspection. In the presence of the COR/PE, wipe-down and visually inspect all accessible interior surfaces of all intake and exhaust piping, mufflers, expansion joints, and all other associated surfaces/components associated with intake/exhaust piping. Inspect soot trap. Determine if further disassembly and cleaning is required. Submit a CFR describing findings and any recommended additional cleaning.

3.2.5 Remove old engines, install new engines. Perform the following.

3.2.5.1 Preservation of Removed Engines. Prior to engine removal, both main diesel engines must be preserved IAW TP-8019 chapter 5.3.2 (Service Interruption of more than 3 months), MTU Preservation and Re-preservation Specifications, A001070/00E. Submit a CFR containing all preservation documentation described in chapter 2.2 (Check sheet for preservation and re-preservation). Ensure all coolant drain lines are opened and all coolant drained from engine.

3.2.5.2 Mark existing alignment adjustments, transfer adjustments to new engines. Coordinate with the COR/PE 24 hours in advance of the inspection. In the presence of the COR/PE, and prior to engine removal, perform the following for efficient install of the new engines:

- Scribe/mark/trace on each existing engine foot liner plate where the engine foot currently rests, then later, at install, place new engines as close as practicable to the marked location.
- Measure and record the "Adjustment Nut Height" of each installed engine foot, then transfer those adjustment dimensions to the feet on the new engines prior to install (ideally while suspended from the crane and immediately after lifting off of shipping crate).

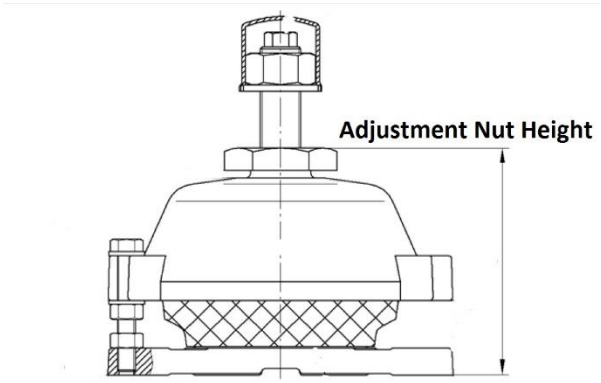

3.2.5.3 Inspect CHOCKFAST liners for damage (e.g. cracks, deformation, etc.). Coordinate with the COR/PE 24 hours in advance of the inspection. Immediately after the existing engines are removed, and in the presence of the COR/PE, conduct a thorough visual inspection of all 12 CHOCKFAST poured liners installed on the engine bed rails. Verify they have no damage, were originally poured correctly, and can be reused. Submit a CFR detailing the inspection results and describe any additional recommended repairs.

3.2.5.3.1 Determine the flatness of the CHOCKFAST/liner assemblies, relative to one another. Determine how closely the combination of all of the liners emulates a perfectly flat surface for the engines to rest upon. After each engine has been removed, and using a proper planar "datum feature" (e.g. 3 points on one of the liners defining a plane, etc.), determine 4 offset dimensions from that plane for each liner. Each offset dimension must be measured from a points within 1" of a different corner on the liner (4 offset dimensions per liner). Submit a CFR detailing the inspection results and describe any additional recommended repairs.

3.2.5.4 Record existing engine flange to RG flange alignment readings. Coordinate with the COR/PE 24 hours in advance of the inspection, and after removing engine to RG coupling and obtaining alignment instrument readings, show those instrument readings to the COR/PE. Submit CFR.

NOTE

As of this writing, bilge coating condition does not warrant mandatory QP1 Certification or Independent NACE inspector. If, at the start of the contract performance period, bilge coating condition deteriorates past the thresholds specified in SFLC STD SPEC 6310 and SFLC STD SPEC 0000, these requirements will be invoked and additional associated preservation costs will be compensated by contract mod if necessary.

3.2.5.5 Clean and touch-up preserve bilges beneath engines. Clean and pressure wash all engine room bilge surfaces to remove all loose contaminates and dirt. Submit a CFR describing the condition of bilge coatings and all discrepancies (e.g. failed coatings, rust, etc.), note all coating discrepancies in excess of 20 sqft total. Coordinate with the COR/PE 24 hours in advance of the inspection, and have the COR/PE inspect all preparation work prior to coating application. Touch-up preserve up to 10 sqft of failed or damaged bilge coating beneath the STBD engine and up to 10 sqft of failed or damaged bilge coating beneath the PORT engine (i.e. include in pre-award quote), and apply one topcoat, up to 5mils, over all intact bilge surfaces. Additional coatings repairs will be authorized/funded by CR/mod to the contract. See paragraph 3.2.11.1 below for coatings requirements.

3.2.5.6 Renewals. In addition to the Government-furnished engines, renew the following components

- All disturbed soft parts (e.g. seals, gaskets, o-rings, etc.).
- All engine fluids (e.g. jacket water, oil, etc.)
- All exhaust hanger rubber grommets.
- Insulation Blankets covering the Exhaust Silencer only (do not renew blankets covering the exhaust pipe leading to and from the Exhaust Silencer, retain and reuse those blankets).
- All disturbed hardware and fasteners (e.g. nuts, bolts, washers, studs, etc.).
- All flex hoses and expansion joints leading to and from each engine.
- The ASW expansion joint leading to the RG.
- The ASW hose leading to R/G from the jacket water cooler.
- All exhaust pipe gaskets.

3.2.5.7 Align new engines to existing reduction gearboxes. Align the engine output flanges to the reduction gear flanges in accordance with Coast Guard Drawing 154WPC 085-201. Coordinate with the COR/PE 24 hours in advance of the inspection, and after completing the final alignment adjustments and obtaining satisfactory alignment instrument readings, show those instrument readings to the COR/PE. Submit CFR.

3.2.6 Repackage and ship removed engines. Place the preserved F-condition MDEs into the new Government-furnished MDE containers reusing the foil bag from the “A” condition engine and accomplish the following:

3.2.6.1 Ensure all preserved F-condition MDE valves are closed.

3.2.6.2 Seal off all electrical sockets with a waterproof adhesive tape. Blank all openings and flanged connections over 3 inches diameter with wooden flanges, sealed with adhesive tape. All other openings (e.g. tapped holes, etc.) must be blanked with plastic or metal caps and waterproof adhesive tape.

3.2.6.3 Install all retained engine support components to facilitate safe engines transport. Renew all disturbed fasteners.

3.2.6.4 Return the crankshaft locking devices (provided on "A" condition engine) with the F-condition engines.

3.2.6.5 Install shipping blanks from A-condition engines (turbos, water inlets/outlets, etc) on F-condition engines.

NOTE

Ensure any parts /assemblies removed for trouble shooting or failure analysis are reinstalled on F-condition engines.

3.2.6.6 Mark the serial numbers on the new Government-furnished containers to reflect the appropriate "F" condition engine serial numbers. Mark the containers condition codes to “F”. Ensure the F-condition engines and containers are protected from weather if left outside.

3.2.6.7 Attach the following labels to the removed engines, ensuring that they are in a prominent position, stating:

- “NO OIL OR WATER, DO NOT TURN!”
- “ENGINE REMOVED FROM SERVICE – Date_____”.

3.2.6.8 Notify the COR/PE at least 24 hours prior to closing shipping containers, then show the COR/PE that all paragraph 3.2.6 requirements have been met, then close the containers. Turn over crated engines as MTI items. Dispose of the old shipping crates.

3.2.7 Restore interferences, remove all temporary installations. Restore all interferences, repair all damage incurred in conjunction with maintenance actions performed during this contract. Perform and/or abide by the following:

3.2.7.1 WERP Reinstallation and testing. Notify the COR/PE at least 24 hours prior to weld joint inspections and tests. After WERPs are reinstalled, in the presence of the COR/PE, perform weld joint testing in accordance with SFLC STD SPEC 0740 on 100% of the weld joint areas that seal the WERP plate to the 01 LVL deck. Submit CFR with NDT results.

3.2.7.2 Touch-up preservation requirements. Prepare and coat exterior surfaces to match existing adjacent surfaces, in accordance with SFLC Std Spec 6310, Appendix A (Cutter and Boat Exterior Painting Systems) or Appendix B (Cutter and Boat Interior Painting Systems), and SFLC Std Spec 0000. Abide by the exception cited below.

3.2.7.2.1 Exception to coating systems specified in SFLC 6310. All coating systems used shall be in accordance with Coast Guard Drawing 154 WPC 631-301, do not use the coating systems specified in SFLC Std Spec 6310.

3.2.7.3 Insulation repairs. In conjunction with reinstallation, repair all damage to disturbed bulkhead insulation (e.g. damaged perforated sheathing pieces, damaged insulation, etc.) by renewing appropriate sectional areas.

3.2.8 Conduct final grooming, inspections, and tests.

3.2.8.1 Engine Sea-Trial Testing. Perform all testing specified in TP-8902A Volume 2 and record all associated data. Perform a minimum 4-hour long sea trial and download ECU7 sea trail data, run for a minimum of 3 hours at full speed. Take post-sea-trial, lube oil, coolant, and fuel oil samples and obtain lab test results for submission.

3.2.8.2 Exhaust blanket thermograph survey. During the sea trial, after the engines and exhaust reach a maximum and steady state temperature (after the full-speed/full-power run), conduct an infrared thermographic survey of the entire exhaust blanket assembly on both engines in the presence of the COR/PE. Use an instrument that captures digital thermographic images, and ensure that images of all blanket surfaces have been recorded. Submit these digital images of all surfaces at steady-state temp with the final report. Ensure that no exhaust blanket areas/seams exceed 550 deg F and that all gaps between blanket seams are covered.

3.2.8.3 Final Report. Submit final CFR containing all test results/data and the "FRC Engine Change-out Inspection/Verification Form" with all completed signatures.

4. NOTES

4.1. Inspection and verification form.

FRC Engine Change-out Inspection/Verification Form

1a. Paragraph 3.2.2.3: Temp structure installed satisfactorily, removal of PORT WERP plate may commence.		
Contractor Name	Signature	Date
COR/PE Name	Signature	Date
1b. Paragraph 3.2.2.3: Temp structure installed satisfactorily, removal of STBD WERP plate may commence.		
Contractor Name	Signature	Date
COR/PE Name	Signature	Date
2a. Paragraph 3.2.4: PORT intake/exhaust duct and muffler inspection completed, associated CFR accurate.		
Contractor Name	Signature	Date
COR/PE Name	Signature	Date
2b. Paragraph 3.2.4: STBD intake/exhaust duct and muffler inspection completed, associated CFR accurate.		
Contractor Name	Signature	Date
COR/PE Name	Signature	Date
3a. Paragraph 3.2.5.1: PORT Liner/feet marking, adjustment measurements, and transfer of adjustment to new engine feet satisfactorily completed.		
Contractor Name	Signature	Date
COR/PE Name	Signature	Date
3b. Paragraph 3.2.5.1: STBD Liner/feet marking, adjustment measurements, and transfer of adjustment to new engine feet satisfactorily completed.		
Contractor Name	Signature	Date
COR/PE Name	Signature	Date
4a. Paragraph 3.2.5.2: PORT CHOCKFAST liners either SAT, or renewal plan accurately described and approved by CFR.		
Contractor Name	Signature	Date
COR/PE Name	Signature	Date
4b. Paragraph 3.2.5.2: STBD CHOCKFAST liners either SAT, or renewal plan accurately described and approved by CFR.		
Contractor Name	Signature	Date
COR/PE Name	Signature	Date
5a. Paragraph 3.2.5.3: PORT engine existing alignment readings, record dimensions below.		
Actual Flange-to-Flange Dimension:	Actual Radial Dimension:	Actual Face Dimension
Contractor Name	Signature	Date
COR/PE Name	Signature	Date

FRC Engine Change-out Inspection/Verification Form

5b. Paragraph 3.2.5.3: STBD engine existing alignment readings, record dimensions below.		
Actual Flange-to-Flange Dimension:	Actual Radial Dimension:	Actual Face Dimension
Contractor Name	Signature	Date
COR/PE Name	Signature	Date
6a. Paragraph 3.2.5.5: SAT inspection of PORT bilge prep work prior to coatings application.		
Contractor Name	Signature	Date
COR/PE Name	Signature	Date
6b. Paragraph 3.2.5.5: SAT inspection of STBD bilge prep work prior to coatings application.		
Contractor Name	Signature	Date
COR/PE Name	Signature	Date
7a. Paragraph 3.2.5.7: PORT engine alignment readings are SAT, record dimensions below.		
Actual Flange-to-Flange Dimension:	Actual Radial Dimension:	Actual Face Dimension
Contractor Name	Signature	Date
COR/PE Name	Signature	Date
7b. Paragraph 3.2.5.7: STBD engine alignment readings are SAT, record dimensions below.		
Actual Flange-to-Flange Dimension:	Actual Radial Dimension:	Actual Face Dimension
Contractor Name	Signature	Date
COR/PE Name	Signature	Date
8. Paragraph 3.2.6: Both F-Condition Engines have crated in accordance with all packaging requirements.		
Contractor Name	Signature	Date
COR/PE Name	Signature	Date
9. Paragraph 3.2.7.1: 100% of weld joint connecting WERP plates to the 01 LVL Deck visually inspected and NDTed SAT.		
Contractor Name	Signature	Date
COR/PE Name	Signature	Date
10. Paragraph 3.2.8.2: Exhaust blankets installed properly and satisfactorily, joints between blanket sections do not leak heat excessively.		
Contractor Name	Signature	Date
COR/PE Name	Signature	Date