Internal Air Transport Certification

ASC/ENFC (ATTLA)
2145 Monahan Way
WPAFB, OH 45433-7017
https://afkm.wpafb.af.mil/AirTransport

Date: 19 April 2012
Item Nomenclature: Eagle EB2-5 Flightline Tow Tractor Bobtail
File Number: 2010.08.19 Rev 1
Requestor: Global Hawk, WR-ALC/GRCAC (Timothy Foley)
Superseded Certification Date: 26 Aug 2010

New Information Summary: Converted from a temporary one-time approval to a full time air transport certification.

Item Description: The subject item is identified to be an Eagle EB2-5 Flightline Tow Tractor Bobtail. Its approximate dimensions are 216" L x 96" W x 82" H. The vehicle gross weight is reported to be 11,400 lbs with a gross vehicle weight rating (GVWR) of 13,000 lbs. Axle weights were not reported. The front axle has a rating of 4,850 lbs. The rear axle has a rating of 9,750 lbs.

Figure 1: Eagle EB2-5 Flightline Tow Tractor Bobtail

Certified Aircraft: USAF C-130, C-17 and C-5

Conditions of Certification:

1. **Maximum Weight for Air Transport:**

   a. Gross Vehicle Weight: 13,000 lbs (sleeper shoring required, see paragraph 5 for dimensions).

      (1) Front Axle – 3,880 lbs (without sleeper shoring) – 4,850 lbs (with sleeper shoring)

      (2) Rear Axle – 7,800 lbs (without sleeper shoring) – 9,750 lbs (with sleeper shoring)

2. **Item Preparation:**

   a. Approach shoring is required. Sleeper shoring might be required as per paragraph 1.a. Shipper shall provide all shoring.

b. All equipment shall be prepared, packaged, or mounted such that there is no adverse effect on the functioning of the equipment after being subjected to the aircraft environmental extremes. MIL-STD-810 provides guidance on approved test methods and data gathering techniques.

c. All hazardous materials (to include fuel level, batteries, etc.) must be prepared and certified for airlift in accordance with TM 38-250/AFMAN 24-204(I). Do not consider this air transport certification as approval for hazardous materials. Authorization for airlifting hazardous material is the responsibility of 401 SCMS/GUMAA (DSN 787-4503 or COM (937) 257-4503).

3. Loading Instructions:

a. The vehicle can be loaded using general loading procedures as listed in the respective aircraft cargo loading manual.

b. C-5: Load the vehicle over the forward ramp with the aircraft in the forward kneel configuration.

c. Approach shoring is required. See paragraph 5 for dimensions. (Will not be required if item is being loaded straight into the cargo compartment via K-loader).

d. Sleeper shoring shall be placed under the frame near the axles (2 stacks each axle) if required per paragraph 1.a.

4. Restraint Requirements: The Eagle EB2-5 Flightline Tow Tractor Bobtail and all accompanying cargo must be restrained to meet MIL-HDBK-1791 requirements of 3G forward, 1.5G aft and lateral, and 2G up. In addition, stored or installed equipment must meet these requirements and be capable of withstanding a 4.5G down load. Restraint may be applied using largest frame components, preferably at longitudinal main frames adjacent to lateral cross members. Restraint may be applied to axles up to their rated capacity in longitudinal and lateral directions as listed in the Item Description paragraph. Do not apply more than 50% of required restraint to vehicle axles for longitudinal and lateral directions. Note that spring mounted axles provide zero vertical restraint. The Pintle hook is rated at 9,750 lbs for longitudinal restraint only.

5. Required Shoring Dimensions & Diagrams:

a. Approach shoring: minimum recommended dimensions for 9˚ approach angle, requirements for other configurations are in the applicable aircraft loading manual.

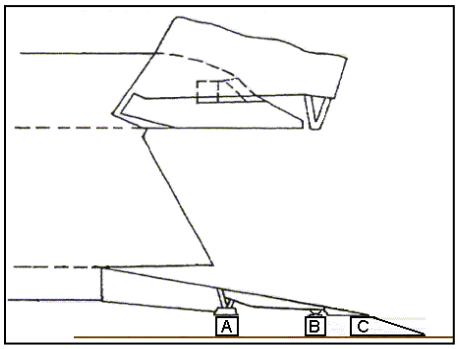

C-5 Forward Shoring (Forward Kneel)
<u>Pedestal Shoring</u>
"A" 16" L x 13" W x 4" H (2 each inboard)
18" L x 15" W x 4" H (2 each outboard)
"B" 15" L x 15" W x 10" H (4 each)
<u>Approach Shoring</u>
"C" 92" L x 24" W x 13" H (2 required)
(Ramp toe end shall be supported by the approach shoring – min 11" L)

(C-5) CAUTION: *Width of approach shoring "C" in the area under the toe must be as wide as the ramp toe it is placed under. The remaining approach shoring extending away from the ramp toe extension contact point must be a minimum of 18 inches wide.*

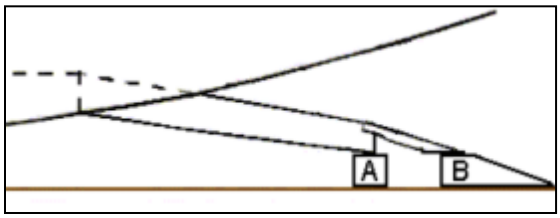

C-17 Shoring
Ramp Pedestal Shoring
"A" 18" L x 30" W x 1" H
Approach Shoring
"B" 96" L x 24" W x 13" H (2 required)
(Ramp toe end shall be supported by the approach shoring – min 11" L)

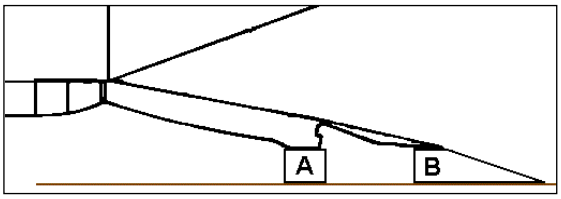

C-130 Shoring
Pedestal Shoring
"A" 18" L x 18" W x 6" H
Approach Shoring
"B" 84" L x 24" W x 11" H (2 required)
(Ramp toe end shall be supported by the approach shoring – min 11" L)

b. Sleeper Shoring: Front axle 7" L x 7" W. Rear axle 10" L x 10" W. The sleeper shoring must be stacked to within ½" of chassis/frame area and secured with cargo straps.

Required Distribution:

1. Shipper shall give a copy of this certification to the ATOC representative when the item is presented for airlift. This memo shall be part of the official cargo manifest documentation package and shall be briefed to the aircraft loadmaster prior to loading this item.

2. AMC/A3V & AMC/A4T

Point of Contact: Brian Herriott, at Brian.Herriott@wpafb.af.mil or ATTLA@wpafb.af.mil, DSN 986-9954 or Commercial (937) 656-9954. Refer to file number 2010.08.19 Rev 1 regarding this item.

Reviewed by: MARK A. KUNTAVANIS
Aerial Delivery Technical Expert
Crew Systems Branch

Approved by: MARTIN J. ANDRIES
Technical Advisor
Crew Systems Branch