STEAM AND CONDENSATE REPAIRS
VICINITY OF B690 AND B1163

ePROJECT #1931736

VICINITY MAP	LOCATION MAP
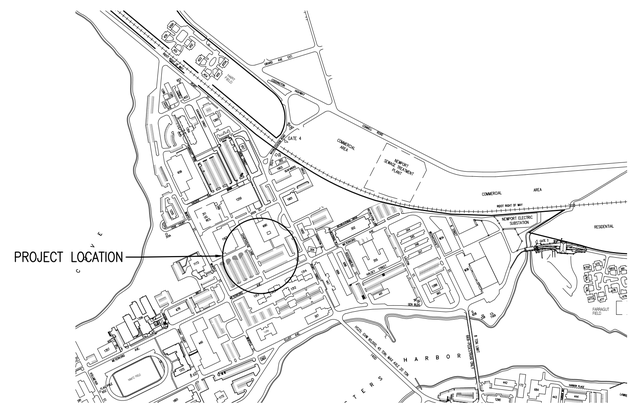	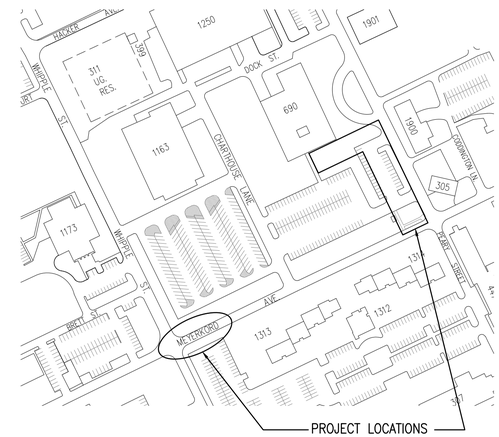

NAVAL FACILITIES ENGINEERING COMMAND MID-ATLANTIC

PUBLIC WORKS DEPARTMENT NAVAL STATION NEWPORT

NEWPORT, RHODE ISLAND

DRAWING INDEX

SHEET ID	SHEET NO.	SHEET TITLE
G-001	1	COVER SHEET
M-101	2	SITE PLAN
M-501	3	DETAILS
M-502	4	DETAILS
M-503	5	UHDS PIPE LAYOUT

SYM	DESCRIPTION	DATE	APPR.

NAVFAC

PRELIMINARY NOT FOR CONSTRUCTION

SEAL

A/E INFO.

APPROVED

FOR COMMANDER NAVFAC

ACTIVITY

NAVAL STATION NEWPORT

SATISFACTORY TO DATE MM/DD/YY

DES -- DRW -- CHK --

PM/DM --

BRANCH MANAGER --

CHIEF ENG/ARCH --

FIRE PROTECTION --

DEPARTMENT OF THE NAVY
NAVAL FACILITIES ENGINEERING COMMAND
PUBLIC WORKS DEPARTMENT - NEWPORT

NAVAL FACILITIES ENGINEERING COMMAND
NAVAL STATION - NEWPORT, RI
NAVAL STATION NEWPORT, RI
STEAM AND CONDENSATE REPAIRS
VICINITYOF B690 AND B1163
NEWPORT, RI

COVER SHEET

SCALE: AS-SHOWN

EPROJECT NO.: 1931736

CONSTR. CONTR. NO. –

NAVFAC DRAWING NO. ##

SHEET 01 OF 05

G-001

DRAWFORM REVISION: 07 AUG 2018

GENERAL NOTES

1. UNDERGROUND UTILITIES LOCATIONS HAVE BEEN DETERMINED FROM FIELD LOCATION OF MANHOLES, GATES AND/OR OTHER SURFACE STRUCTURES, BY PHYSICAL INSPECTION AND/OR FROM EXISTING PLANS OF RECORD. ADDITIONAL UTILITIES MAY EXIST, CONTRACTOR SHALL UTILIZE "DIG SAFE" AS WELL AS GPR PRIOR TO EXCAVATION.

2. THE LAYOUT OF EXPANSION LOOPS AND "Z" BENDS FOR ALL NEW DIRECT BURIED STEAM AND CONDENSATE SYSTEMS SHALL BE VERIFIED BY THE PIPING MANUFACTURER FOR CONFORMANCE TO ASME 31.1 AND ALL MANUFACTURER, DEVIATIONS FROM LAYOUT SHOWN MUST BE APPROVED BY THE CONTRACTING OFFICER.

3. ASBESTOS, WHERE INDICATED AND SLATED FOR REMOVAL, SHALL BE HANDLED IAW APPROVED ABATEMENT PLAN

4. ALL GROUND SURFACES SHALL BE RESTORED TO THE ORIGINAL CONDITION AFTER CONSTRUCTION IS COMPLETE

5. WHERE PAVEMENT IS REQUIRED TO BE REMOVED AND REPLACED - ALL EDGES SHALL BE SAWCUT, ROAD SURFACES SHALL BE 2" ASPHALT ON 8" REINFORCED CONCRETE

6. PROVIDE BRACING, SHEATHING, OR SHORING TO PROTECT EXISTING STRUCTURES, CURBS, FOUNDATION PADS ETC. AND TRENCH EXCAVATION

7. CONTRACTOR SHALL PROVIDE DEWATERING EQUIPMENT FOR DEWATERING OF TRENCHES AND OR MANHOLES AS NEEDED

8. REMOVE CONCRETE ANCHORS FROM EXISTING STEAM AND CONDENSATE PIPE AND PROVIDE NEW ANCHORS WHERE INDICATED

9. REMOVE ALL EXISTING PIPE INSULATION AS NEEDED WITHIN MANHOLES FOR POINTS OF CONNECTIONS AND REPLACE IN KIND. INSULATION WITHIN MH'S 2-36, 2-37, 2-33, 2-34 IS NON-ASBESTOS

10. FIELD VERIFY ALL DIMENSIONS SHOWN ON THIS AND ALL OTHER DRAWINGS

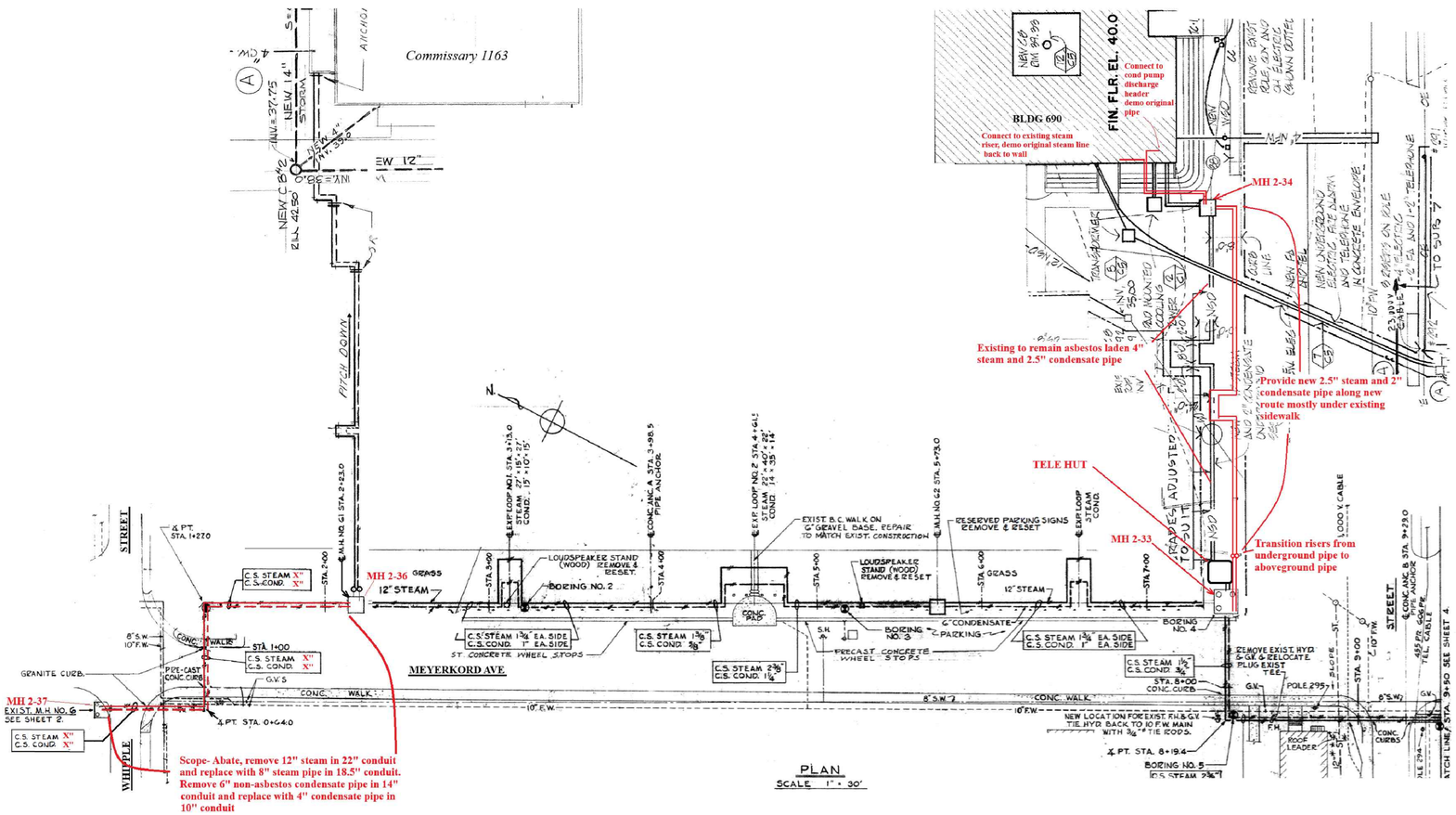

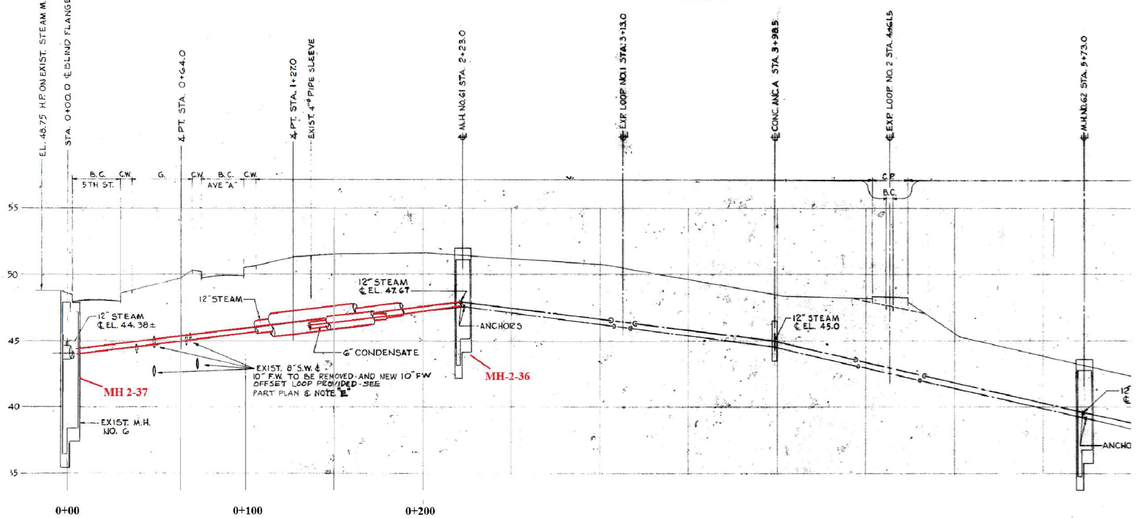

PROFILE NEW STEAM & CONDENSATE LINES 2-37 TO 2-36

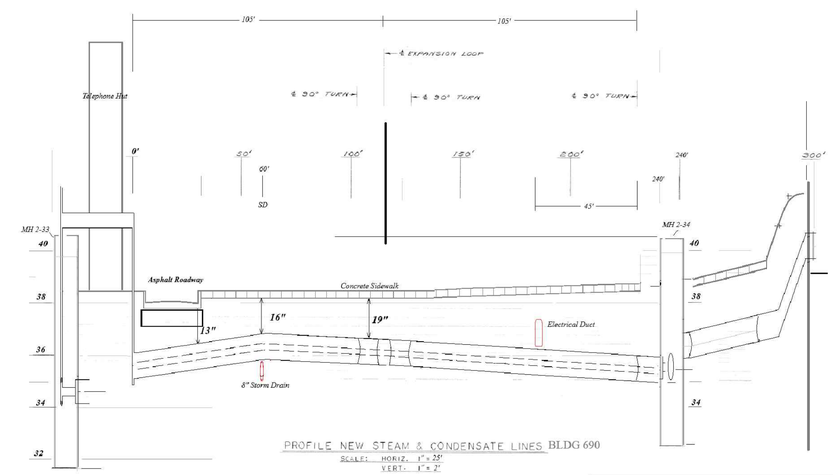

PROFILE NEW STEAM & CONDENSATE LINES BLDG 690
SCALE: HORIZ. 1" = 25'
VERT. 1" = 2'

DEPARTMENT OF THE NAVY Naval Station Newport RI

Naval Station Newport
Steam and Condensate Repairs Vicinity
of B690 & B1163CP
Sketch -01 Site Plan

PRELIMINARY NOT FOR CONSTRUCTION

NAVFAC

DEPARTMENT OF THE NAVY
NAVAL FACILITIES ENGINEERING COMMAND
PUBLIC WORKS DEPARTMENT – NEWPORT
NAVAL FACILITIES ENGINEERING COMMAND - MID ATLANTIC
NAVAL STATION – NEWPORT, RI
NAVAL STATION NEWPORT, RI
STEAM AND CONDENSATE REPAIRS
VICINITY OF B690 AND B1163
SITE PLAN

ACTIVITY: NAVAL STATION NEWPORT
SATISFACTORY TO DATE MM/DD/YY
DES -- DRW -- CHK --
PM/DM --
BRANCH MANAGER --
CHIEF ENG/ARCH --
FIRE PROTECTION --

SCALE: AS–SHOWN
EFPROJECT NO.: 1931736
CONSTR. CONTR. NO.: –
NAVFAC DRAWING NO.: ##
SHEET 02 OF 05
M-101

DRAWFORM REVISION: 07 AUG 2018

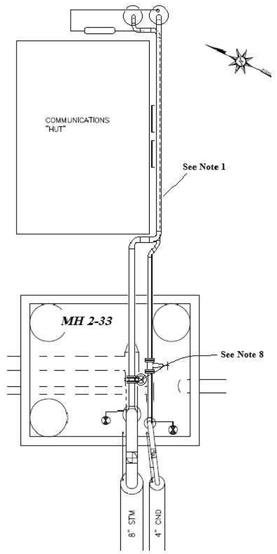

DETAIL 1 - MH 2-33 PLAN
No Scale

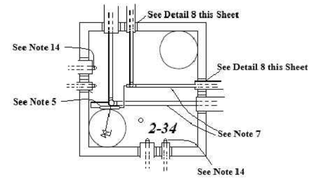

DETAIL 3 - MH 2-34 PLAN
No Scale

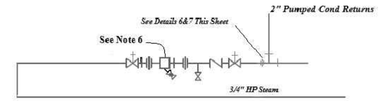

DETAIL 5 - TYPICAL TRAP ARRANGEMENT
No Scale

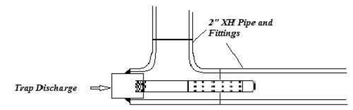

DETAIL 6 - SPARGE PIPE INSTALLATION ON 2' PIPE
No Scale

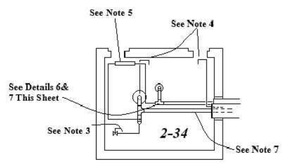

DETAIL 4 - MH 2-34 SECTION
No Scale

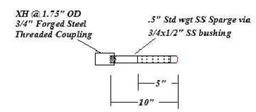

DETAIL 7 - SPARGE PIPE
No Scale

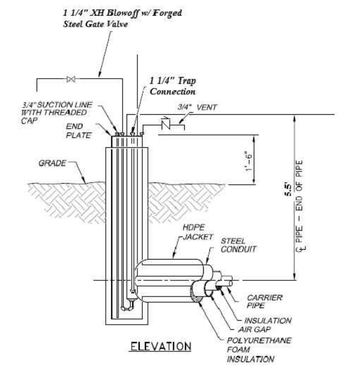

DETAIL 10 - DRIP TEE RISER MH 2-33
No Scale

NOTES

1) PROVIDE 2.5" SCH. 40 STEAM PIPE AND 2" SCH. 80 CONDENSATE PIPE INSTALLED AS CLOSE TO TELEPHONE COMMUNICATIONS BUILDING AS POSSIBLE, ASSUME PIPE SUPPORT FROM BELOW.
2) REPLACE IN KIND INSULATION REMOVED FOR THE INSTALLATION OF 2.5" WELD-O-LET ON 8" STEAM PIPE FOR STEAM AND 2" WELD-O-LET ON 4" PIPE FOR CONDENSATE.
3) PROVIDE ¾" 300# THREADED BALL VALVE SITUATED FOR REACH ROD OPERATION VIA EITHER OF THE MH OPENINGS ABOVE.
4) PROVIDE ¾" STEAM PIPE CASING VENT TERMINATIONS INCLUDING CHECK VALVE WITHIN 6" OF MH COVER/CEILING.
5) TYPICAL TRAP ASSEMBLY – SEE DETAIL 5 FOR ARRANGEMENT BUT PLACE THIS TRAP ASSEMBLY UNDERNEATH AND ADJACENT TO BUT NOT BLOCKING EITHER MH OPENING. THE INTENT IS TO ACCESS AND MAINTAIN TRAP ASSEMBLY FROM ABOVE.
6) PROVIDE ¾" FORGED STEEL THREADED "UNIBODY" TRAP COMPRISED OF STRAINER, STRAINER BLOWOFF, AND BOLT ON THERMODYNAMIC LOW CAPACITY TRAP (UTD52L OR EQUAL). ISOLATION VALVING TO BE FORGED STEEL 800# THREADED VALVES WITH TEST TEE W/3/4" 300# THREADED BALL VALVE.
7) PROVIDE 2.5" X 2" AND 2" X 2" CELLULAR GLASS INSULATION W/PIT WRAP WITHIN MH. TRAP ASSEMBLY TO BE FITTED WITH REMOVABLE VALVE BLANKET FITTED WITH SS D RINGS AND STRAPS.
8) TRIPLE OFFSET LUG STYLE 150# VALVE TO BE PROVIDED BY THE GOVERNMENT
9) FIELD VERIFY ALL DIMENSIONS, MAINTAIN @ LEAST 18' OF HDPE JACKETING ABOVE GRADE FOR DRIP TEE STEAM RISER AND CONDENSATE RISER
10) STEAM PIPE SHOWN, CONDENSATE PIPE INSTALLATION SIMILAR
11) INTENT IS TO MAINTAIN ABOUT 18 OF COVER TO ALLOW PENETRATION ABOVE FINISHED FLOOR ELEVATION
12) CUT AND CAP 4' STEAM SERVICE WITHIN MH 2-33
13) STEAM PIPE ANCHOR SHOWN, CONDENSATE ANCHOR SIMILAR
14) CUT AND CAP EXISTING TO BE ABANDONED IN PLACE STEAM AND CONDENSATE PIPE PENETRATIONS IN MH'S 2-33, 2-34 AS WELL AS PENETRATIONS WITHIN THE STEAM ENTRANCE PIT IN BLDG 690

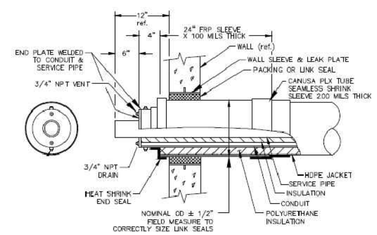

DETAIL 8 - TYPICAL WALL PENETRATIONS See Note 10
No Scale

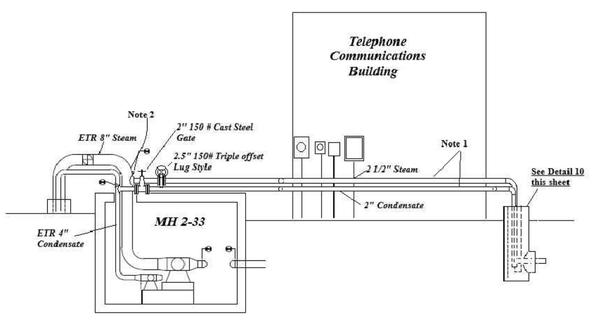

DETAIL 2 - MH 2-33 SECTION
No Scale

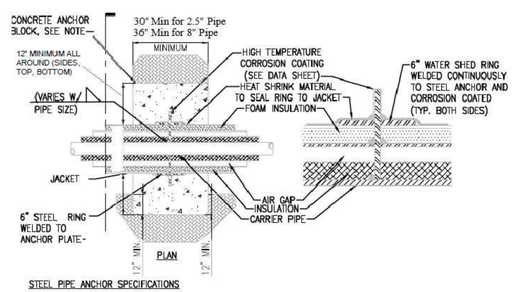

STEEL PIPE ANCHOR SPECIFICATIONS

ANCHOR PLATES ARE 1/2" STEEL CENTERED ON CONDUIT WITH DIMENSIONS 1 1/2" LARGER HORIZONTALLY AND 1 1/2" LARGER VERTICALLY THAN NOMINAL HDPE JACKET DIAMETER. THE CONCRETE ANCHOR BLOCK SHOULD EXTEND A MINIMUM OF 12" INTO THE TRENCH WALL, UNDISTURBED EARTH OR COMPACTED BACK FILL (MINIMUM 95 PROCTOR) IN ALL DIRECTIONS, THE ANCHOR BLOCK SIZE IS BASED ON THE SOIL CONDITIONS AND THE FORCES EXERTED ON THE ANCHOR.

DETAIL 9 - ANCHOR INSTALLATION See Note 10
No Scale

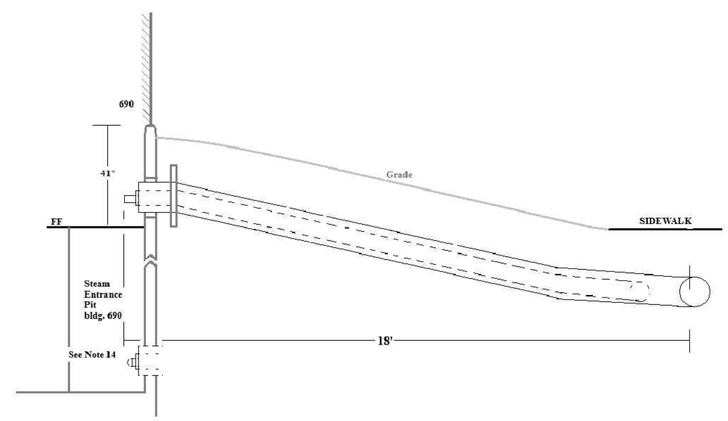

DETAIL 11 - MH 2-34 TO BLDG 690 SECTION DETAIL
No Scale

DEPARTMENT OF THE NAVY Naval Station Newport RI

Naval Station Newport
Steam and Condensate Repairs Vicinity
of B690 and B1163
Sketch -02 Details 1 of 2

STM	DESCRIPTION	DATE	APPR

NAVFAC

PRELIMINARY NOT FOR CONSTRUCTION

SEAL

A/E INFO

APPROVED

FOR COMMANDER NAVFAC

ACTIVITY: NAVAL STATION NEWPORT

SATISFACTORY TO DATE MM/DD/YY

DES -- DRW -- CHK --

PM/DM --

BRANCH MANAGER --

CHIEF ENG/ARCH --

FIRE PROTECTION --

DEPARTMENT OF THE NAVY
NAVAL FACILITIES ENGINEERING COMMAND
PUBLIC WORKS DEPARTMENT – NEWPORT

NAVAL FACILITIES ENGINEERING COMMAND - MID ATLANTIC
NAVAL STATION – NEWPORT, RI

NAVAL STATION NEWPORT, RI

NEWPORT, RI

STEAM AND CONDENSATE REPAIRS
VICINITYOF B690 AND B1163

DETAILS

SCALE: AS–SHOWN

EPROJECT NO.: 1931736

CONSTR. CONTR. NO. –

NAVFAC DRAWING NO. ##

SHEET 03 OF 05

M-501

DRAWFORM REVISION: 07 AUG 2018

SECTION A (M7 | M7)

SCALE: 1/2" = 1'-0"

NEW WORK CONNECTION POINT
(ARROW POINTS TOWARD NEW WORK)

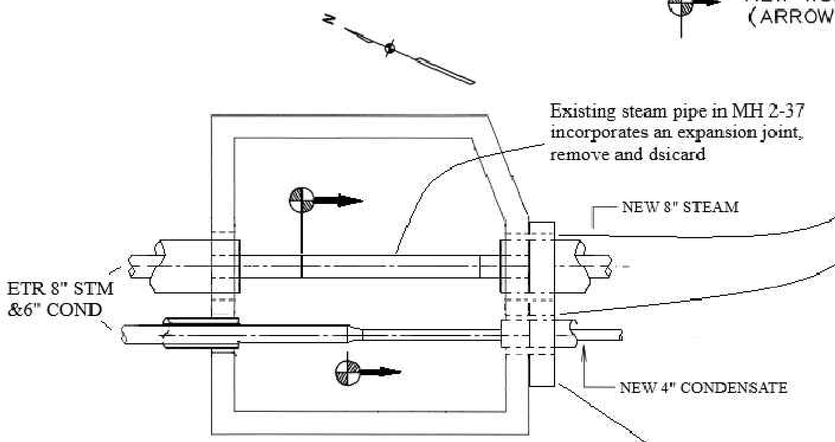

STMH 2-37 PLAN VIEW

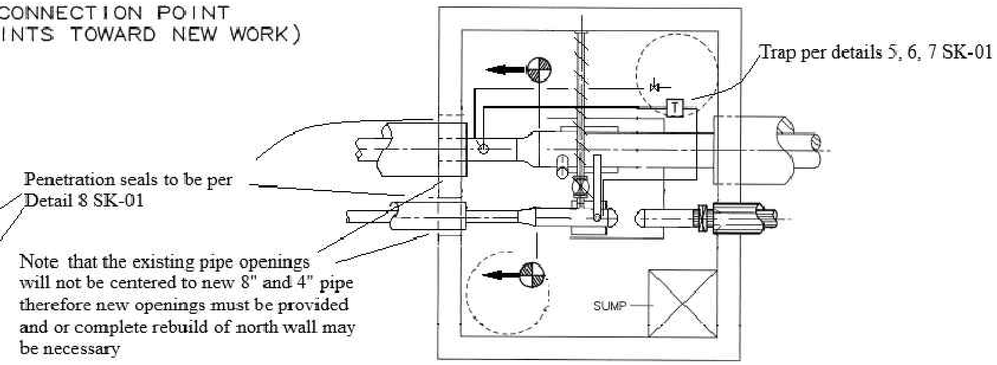

STMH 2-36 PLAN VIEW

Drawings from condensate line replacement in 1993 indicate the south wall of MH 2-37 was built up w/additional concrete in area of pipe penetrations.
Note also that the existing pipe openings will not be centered to new 8" and 4" pipe therefore new openings must be provided and or complete rebuild of south wall may be necessary

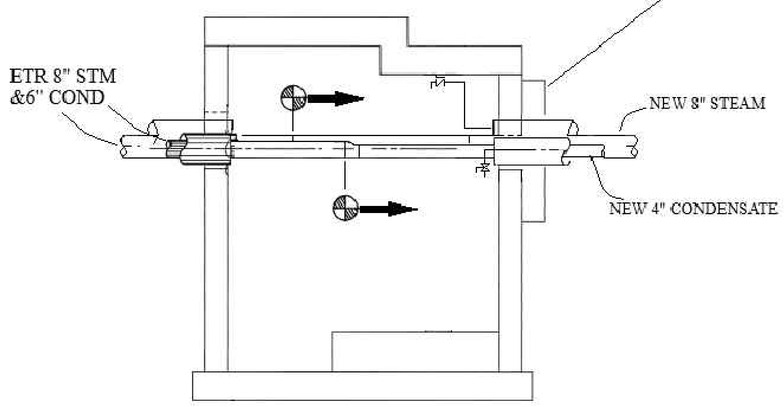

STMH 2-37 PROFILE

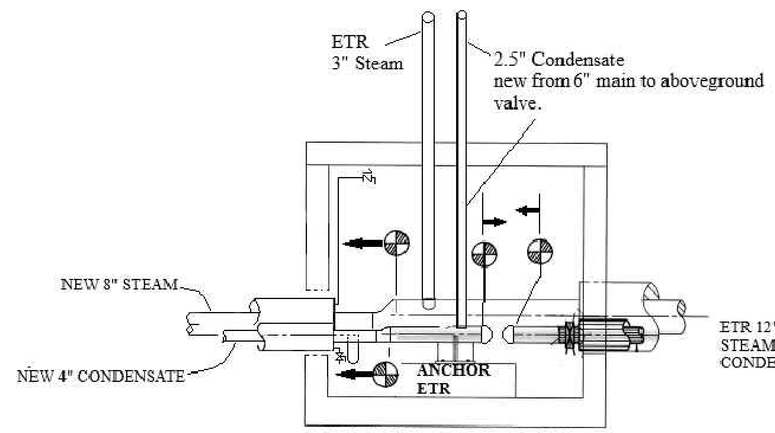

STMH 2-36 PROFILE

DEPARTMENT OF THE NAVY Naval Station Newport RI

Naval Station Newport
Steam and Condensate Repairs Vicinity
of B690 and B1163
Sketch - 03 Details 2 of 2

PRELIMINARY NOT FOR CONSTRUCTION

NAVFAC

APPROVED
FOR COMMANDER NAVFAC
ACTIVITY
NAVAL STATION NEWPORT
SATISFACTORY TO DATE MM/DD/YY
DES -- DRW -- CHK --
PM/DM --
BRANCH MANAGER --
CHIEF ENG/ARCH --
FIRE PROTECTION --

DEPARTMENT OF THE NAVY
NAVAL FACILITIES ENGINEERING COMMAND
PUBLIC WORKS DEPARTMENT - NEWPORT
NAVAL FACILITIES ENGINEERING COMMAND - MID ATLANTIC
NAVAL STATION - NEWPORT, RI
NAVAL STATION NEWPORT, RI
STEAM AND CONDENSATE REPAIRS
VICINITY OF B690 AND B1163
NEWPORT, RI
DETAILS

SCALE: AS-SHOWN
EPROJECT NO.: 1931736
CONSTR. CONTR. NO. –
NAVFAC DRAWING NO. ##
SHEET 04 OF 05
M-502
DRAWFORM REVISION: 07 AUG 2018

Design Conditions 690 Steam Lateral:

2.5" Steam Pipe - 366 Deg F. 150 PSIG
Max stress 22,500#/SQ.IN.

2" Condensate Pipe – 250 Dg F, 150 psig
Max Stress 15,000#/SQ.IN.

BLDG 690 UHDS PIPING

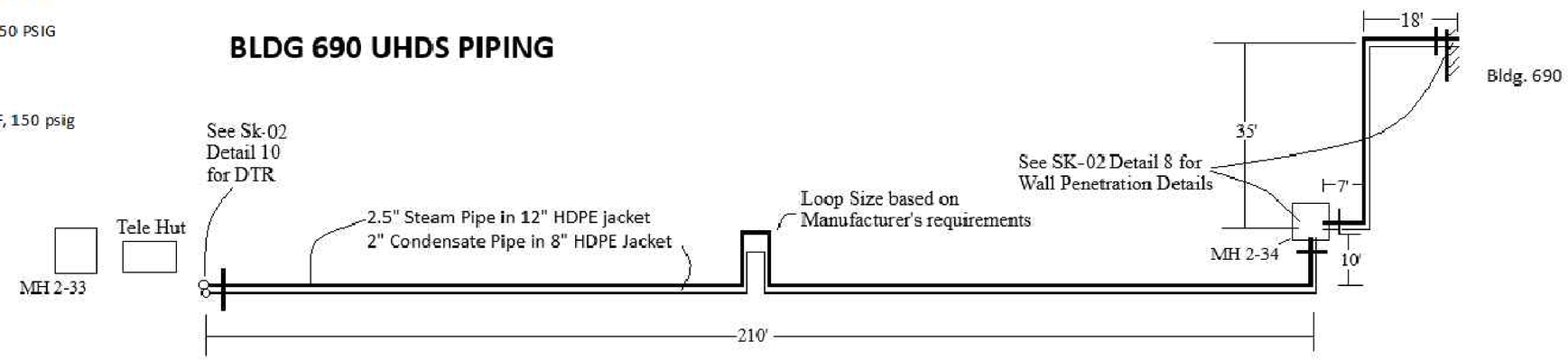

N.T.S.

Design Conditions Meyerkord Ave Steam Main:

8" Steam Pipe - 450 Deg F. 150 PSIG
Max stress 22,500#/SQ.IN.

4" Condensate Pipe – 250 Dg F, 150 psig
Max Stress 15,000#/SQ.IN.

Notes

* These are Thermacor existing to remain pipe sections from T'cor drawing 32879 only shown to indicate existing to remain anchor that will be used for the new piping.

CS = ?? – Cold Springing as per manufacture's requirements to satisfy above design conditions

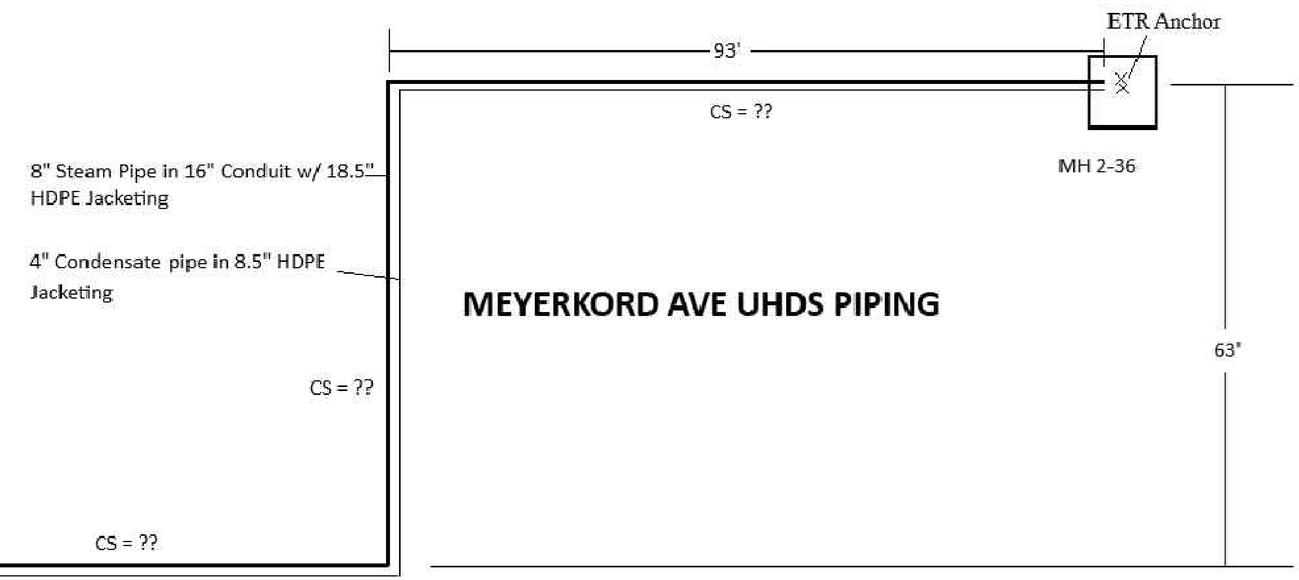

MEYERKORD AVE UHDS PIPING

N.T.S.

DEPARTMENT OF THE NAVY NAVAL STATION NEWPORT, RI

Naval Station Newport
Steam and Condensate Repairs Vicinity of 690 & 1163
Sketch 04 UHDS Pipe Layout

NAVFAC

PRELIMINARY
NOT FOR CONSTRUCTION

ACTIVITY: NAVAL STATION NEWPORT
SATISFACTORY TO DATE MM/DD/YY
DES -- DRW -- CHK --
PM/DM --
BRANCH MANAGER --
CHIEF ENG/ARCH --
FIRE PROTECTION --

DEPARTMENT OF THE NAVY
NAVAL FACILITIES ENGINEERING COMMAND
PUBLIC WORKS DEPARTMENT – NEWPORT
NAVAL FACILITIES ENGINEERING COMMAND - MID ATLANTIC
NAVAL STATION – NEWPORT, RI
NAVAL STATION NEWPORT, RI
NEWPORT, RI
STEAM AND CONDENSATE REPAIRS
VICINITY OF B690 AND B1163
UHDS PIPE LAYOUT

SCALE: AS–SHOWN
EPROJECT NO.: 1931736
CONSTR. CONTR. NO. –
NAVFAC DRAWING NO. ##
SHEET 05 OF 05
M-503
DRAWFORM REVISION: 07 AUG 2018