Fermi National Accelerator Laboratory

PIP-II CW Beam RF Amplifier for SSR2 Cavities

Technical Requirements Specification

Document number: ED0047317

Managed by Fermi Forward Discovery Group, LLC
for the U.S. Department of Energy Office of Science
www.fnal.gov

Document Approval

Signatures Required	Date Approved
Originator: James Steimel	
Reviewer: Victor Grzelak	As in Teamcenter
Reviewer: David Ziliak	As in Teamcenter
Reviewer: Chris Becker	As in Teamcenter
Reviewer: Thomas DiGrazia	As in Teamcenter
Reviewer: Jeremy Nudell	As in Teamcenter
Approver: Jeremiah Holzbauer	As in Teamcenter

Revision History

Revision	Date of Release	Description of Change
---	23-Apr-2026	Initial Release for Review
A	--	Reduce 120V Breaker Short Circuit Rating

Table of Contents

1. SCOPE 5
2. ACRONYMS, TERMS, AND DEFINITIONS 5
3. INTRODUCTION 6
4. REFERENCED DOCUMENTS 7
5. ASSUMPTIONS 7
6. FUNCTIONAL SPECIFICATION 7
7. REQUIREMENTS 9
7.1. System Definition 9
7.1.1. Background 9
7.1.2. System Diagram 9
7.1.3. High Level Operations Concepts/Use Cases 10
7.1.4. Interface Definition 13
7.2. Technical Specification 14
7.2.1. Primary Requirements 14
7.2.2. RF Stability and harmonics 14
7.2.3. EMI and RF leakage 14
7.2.4. AC Power Requirements 15
7.2.5. AC to DC Requirements 15
7.3. Environmental Conditions 15
7.4. Cooling Specification 15
7.4.1. Water Connections 16
7.5. Installation and Integration Requirements 16
7.5.1. Rack Requirements 17
7.5.2. External Connections 18
7.5.3. Front Panel Interface 18
7.6. Reliability 19
7.7. Interlock Connections and Readbacks 19
7.7.1. External Safety Interlock 19
7.7.2. External Interlocks 20
7.8. Controls 20
7.8.1. Network Compatibility 20
7.8.2. Configuration 20
7.8.3. Communication Protocol 20
7.8.4. Minimum Required Readbacks 20
7.8.5. Minimum Required Controls 21
7.8.6. Data Buffer Specifications 21

7.9. Transportation 22
7.10. Documentation 22
8. VERIFICATION & QUALITY ASSURANCE PROVISIONS 22
9. APPLICABLE STANDARDS 24
APPENDIX A – *(NOTES, BACKGROUND, DIAGRAMS, CALCULATIONS, ETC.)* **Error! Bookmark not defined.**

1. SCOPE

This document defines the requirements for the commercial 325 MHz, RF amplifiers to be used to power the SSR2 cavities in the FNAL, PIP-II linear accelerator.

Designing and development of the 325 MHz, RF power amplifier will be conducted outside of Fermilab and must adhere to these requirements. Fermilab will receive these amplifiers pre-assembled and ready for turn-key operation.

2. ACRONYMS, TERMS, AND DEFINITIONS

AC	Alternating Current
ASME	American Society of Mechanical Engineers
CW	Continuous Wave
DC	Direct Current
DCPS	Direct Current Power Supply
EM	ElectroMagnetic
EMC	ElectroMagnetic Compatibility
EMI	ElectroMagnetic Interference
EPICS	Experimental Physics and Industrial Control System
FCC	Federal Communications Commission (US)
FNAL	Fermi National Accelerator Laboratory
HB650	High Beta 650 MHz
HPRF	High Power Radio Frequency
HWR	Half Wave Resonator
IEC	International Electrotechnical Commission
IEEE	Institute of Electrical and Electronics Engineers
LB650	Low Beta 650 MHz
LBS	Pounds
LLRF	Low Level Radio Frequency
MNPT	Male National Pipe Thread
MTBF	Mean Time Between Failure
MTTR	Mean Time To Repair
NEC	National Electrical Code
NEMA	National Electrical Manufacturers Association
NFPA	National Fire Protection Association
NPT	National Pipe Thread
NRTL	National Recognized Testing Laboratory

OPC-UA	Open Platform Communications – Unified Architecture
PA	Power Amplifier
PCW	Process Clean Water
PIP-II	Proton Improvement Plan II
PS	Power Supply
PSI	Pounds per Square Inch
RF	Radio Frequency
RFP	Request for Purchase
SNMP	Simple Network Management Protocol
SRF	Superconducting Radio Frequency
SSA	Solid State Amplifier
SSR	Single Spoke Resonator
TCP	Transmission Control Protocol
UL	Underwriters Laboratory
VAC	Volts Alternating Current
VSWR	Voltage Standing Wave Ratio

The following definitions of solid-state amplifier subcomponents listed in the glossary below are used in this document.

Glossary

PA (Power Amplifier)/RF Slice	Fundamental gain unit of the amplifier; usually consisting of a single transistor package.
PA module	Consists of PAs within a common enclosure.
DCPS Cabinet/Rack	It provides DC bias for all PAs in RF cabinet. It will have a 3 Phase AC IN connection.
PS module	Basic DC power supply module/entity

3. INTRODUCTION

Fermi National Accelerator Laboratory (FNAL) is constructing a new, linear accelerator (linac) to improve its capabilities for high energy particle physics research. The linac will accelerate ionized protons using superconducting RF (SRF) cavities distributed throughout an underground tunnel. The design of the PIP-II linac requires a dedicated RF source for each cavity in the accelerator.

There are over 100 cavities in the current linac design with each cavity tuned to some multiple of 162.5 MHz (162.5 MHz, 325 MHz, and 650 MHz). Figure 3-1 shows an illustration of the full linac and a blown-up image of the different modules that contain the cavities. The superconducting resonant cavities used

for this linac are specifically designed with a very high loaded quality factor (Q_L) around 1e6, which allows the cavities to establish very high electric fields.

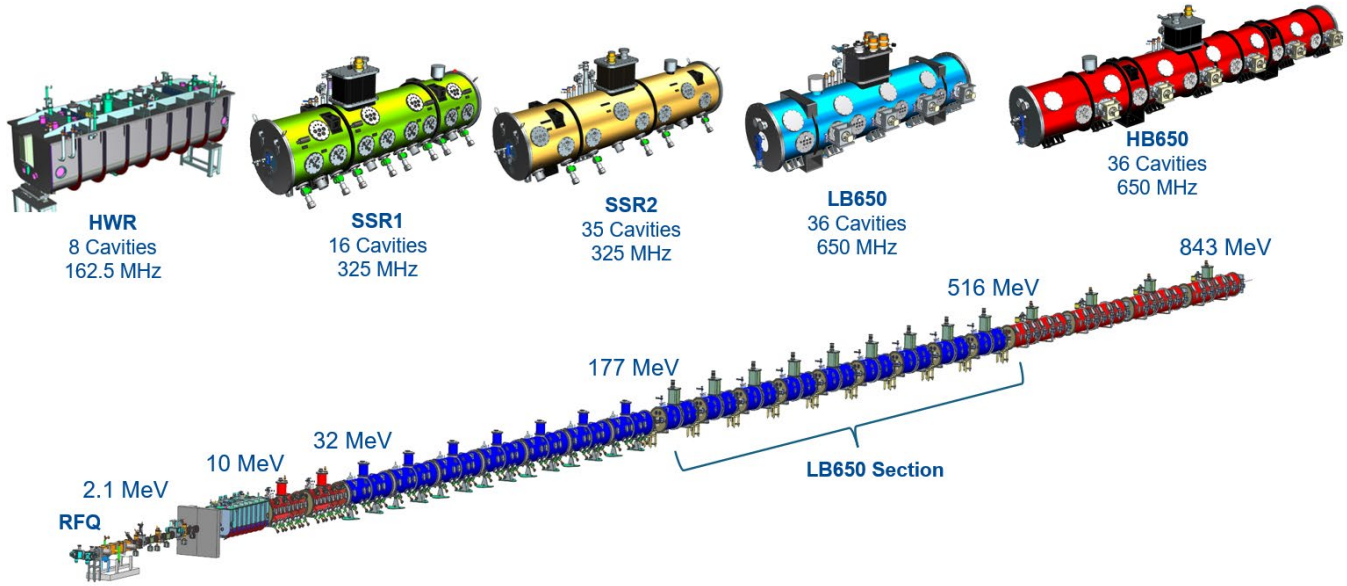

Figure 3-1: The arrangement of the different styles of cavities in the PIP-II beamline.

This specification covers the necessary quantity and RF power to drive the cavities in the SSR2 cryomodules.

4. REFERENCED DOCUMENTS

1 OSHA's NRTL Program https://www.osha.gov/nationally-recognized-testing-laboratory-program

5. ASSUMPTIONS

1) Amplifiers are to be run in a single tone, CW operation, with simple, square pulsed amplitude modulation provided by external, RF input source.
2) Amplifier will run in a linear, fixed gain regime. Output power and phase regulation will be handled by an FNAL, low level RF system.
3) The output of the amplifier will be protected by a high-power circulator, placed within 5m of the amplifier output and provided by FNAL.
4) FNAL will provide necessary cooling water supply and return within the limits explicitly stated in this technical specification.

6. FUNCTIONAL SPECIFICATION

Besides the standard function of an RF amplifier of creating an amplified copy of the voltage on its input to its output, there are several other functional requirements that this amplifier requires to operate in the linear accelerator environment.

1) Each amplifier shall be equipped with a special, personnel interlock input that shall be designed as fail-safe.
    a. The personnel interlock will disable the AC supply power to the DC power supplies that provide bias to the final PAs with a mechanical relay(s).
    b. There shall be no additional controls in the signal path between the personnel interlock input and the relay coils (monitoring is allowed). There can be nothing in the signal path that could bypass or potentially interrupt the signal from the interlock input.
    c. There will be an external means of verifying the status of the relays for interlock testing.
2) For Lock-Out Tag-Out, the amplifier will have a NEMA rated, high impedance verification test point capable of verifying that its main power source has been disconnected both visually and with standard probes from a voltmeter.
3) The amplifier will protect itself from damage due to external issues. These will include:
    a. High reflected power
    b. Input overdrive
    c. Loss of water cooling
    d. Overtemperature
    e. Sudden loss of line power
4) FNAL will provide a system that protects the cavity from damage when it is not prepared to take RF. This system needs to disable the RF output of the amplifier for proper protection.
    a. The amplifier will provide a dedicated, external input to disable the RF drive (not the DC bias).
5) The amplifier will provide an external output signal that communicates its ready/not ready status.
6) The amplifier shall provide the following, minimum set of controls, available both locally and remotely unless otherwise noted.
    a. DC Bias On
    b. DC Bias Off
    c. RF Enable
    d. RF Disable
    e. Reset (Latched Interlocks)
    f. Local/Remote (not available remotely)
7) The amplifier shall provide a measure of its RF output forward power, RF output reflected power, and RF input power locally and remotely.
8) The amplifier shall make all internal parameters used for its protection interlocks available for remote access.
9) The amplifier shall provide a time-stamped buffer of internal status and parameters for later retrieval through remote access.
10) The amplifier shall provide a dedicated power source for the control system, so that diagnostics and communication remain functional while bias power is removed.
11) All replaceable components will be identified by name, manufacturer, and unique serial number.

7. REQUIREMENTS

7.1. System Definition

7.1.1. Background

Fermilab is constructing a linear particle accelerator with sufficient energy and intensity to inject into our higher energy, synchrotron accelerators. The beam from these accelerators will be applied to targets which produce exotic particles for study.

One of the key components of any particle accelerator is the accelerating cavity. The cavity stores radio frequency energy that is transferred to the particles as they pass through the cavity. The amount of particle energy gain is a direct function of the voltage generated across the cavity. Since the cavity stores RF energy, it is also important that the particles cross the cavity at the proper RF phase. Otherwise, particles could be mistakenly decelerated instead of accelerated. Figure 7-1 illustrates the changing fields in the cavities and the proper synchronization of positively charged particles.

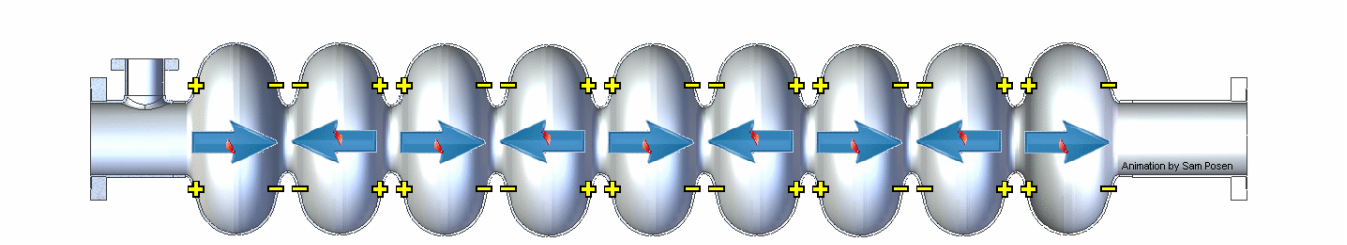

Figure 7-1: Illustration of charge particles being accelerated by RF fields in a cavity.

To help produce the high accelerating voltages required by the particles, the cavities are designed to resonate at an integer multiple of the particle bunch frequency. In this linear accelerator, the particle bunches are spaced at a frequency of 162.5 MHz. The cavities in the linac are designed to resonate at 162.5 MHz, 325 MHz, and 650 MHz. Higher frequency cavities are used as the beam reaches higher energy in the linac.

The purpose of this technical specification is to define the requirements of the RF power source used to drive the 650 MHz cavities.

7.1.2. System Diagram

A simplified cavity RF system diagram is shown in figure 7-2. The RF power source in this diagram is an RF amplifier that provides linear gain to the output of the Low Level RF (LLRF) system. The LLRF system monitors the forward power from the directional coupler and the cavity antenna to regulate the amplifier drive for stable cavity voltage and relative RF phasing. The LLRF system contains a stable feedback system that responds to the error between the RF vector voltage measured and its internal, RF vector settings. The amplifier is responsible for generating a consistent and predictable gain and phase output relative to the input signal that is as linear. An external circulator is connected to the output of each RF amplifier to protect it from the reverse power from the cavity. After going through the circulator and

directional coupler, the RF power enters a power coupler that acts as an internal, cavity antenna that couples RF power into the cavity.

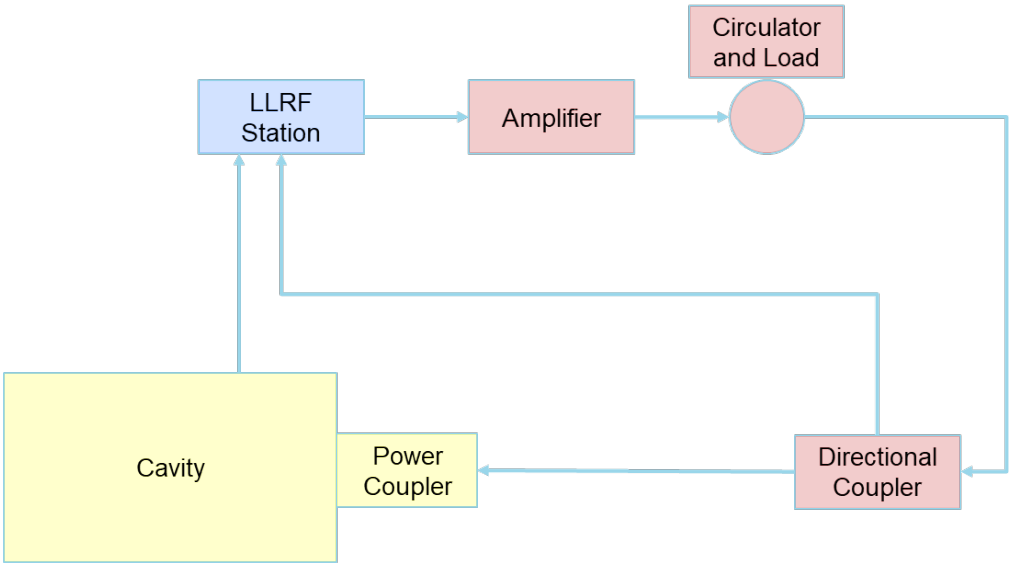

Figure 7-2: PIP-II Linac RF System Block Diagram

7.1.3. High Level Operations Concepts/Use Cases

The primary use case for the specified RF amplifier is to accelerate beam in the PIP-II linac. This section describes the amplifier's function in this use case in more detail and describes other use cases associated with the amplifier.

7.1.3.1. Beam Acceleration

During beam acceleration, the RF system must maintain a stable voltage across the cavity as beam enters and exits the cavity. The primary function of the LLRF system is to monitor the cavity voltage magnitude and phase and use that information to adjust the drive level and phase to the RF amplifiers. The LLRF system must maintain the output at a fixed frequency that is synchronized to the beam frequency. This feedback system has relatively high gain to maintain the tight tolerances for cavity voltage and phase stability. Keeping the feedback loop delay as low as reasonably possible is an important specification to maintain stability of the feedback loop.

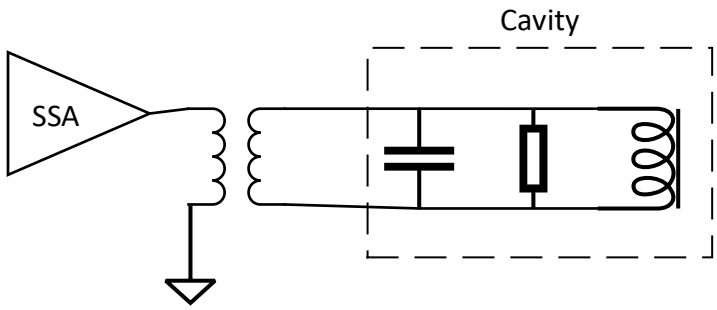

Figure 7-3: Circuit model of SSA driving a resonant cavity without beam

Figure 7.3 shows a circuit model of the cavity without beam acceleration. The RF input coupler is set to be overcoupled to the cavity, and the cavity looks like a high impedance at the RF input when the RF drive is at the cavity resonance. The power required to maintain the cavity voltage without beam is about half the rated power of the RF amplifier. Most of the power that drives the cavity in this state is reflected back to the amplifier because of the high impedance mismatch.

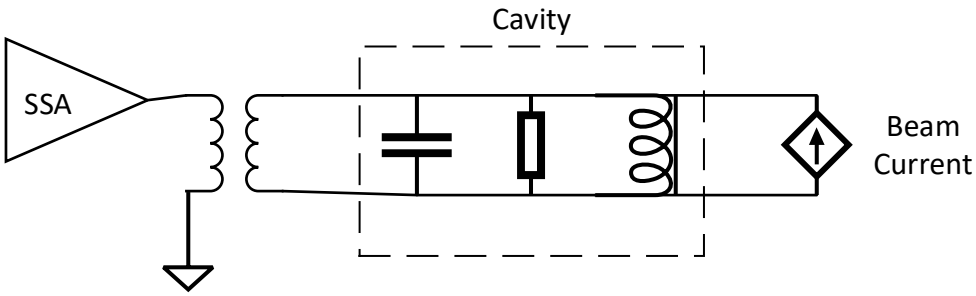

Figure 7-4: Circuit model of SSA driving a resonant cavity with beam current

Figure 7.4 shows a circuit model of the cavity with beam acceleration. The beam acts as a second current source in the cavity of equal frequency and fixed phase relative to the RF drive. In order to maintain the cavity voltage, the RF drive power must be increased to compensate for the extra energy lost due to beam loading. Figure 7.5 shows a plot simulating the relative RF signal output of the amplifier when a 500μs pulse of beam passes through the cavity. The cavity input coupler is set so that the cavity looks like a matched load to the RF drive when the maximum amount of specified beam current is accelerated. Synchronization of the beam pulse with the increase in RF drive is important. If the increase in drive power comes too late, the beam current will load the cavity and reduce the accelerating voltage. If the increase in drive power is too early, the accelerating voltage across the cavity will increase and be too high. Also, increase in drive needs to be proportional to the beam current. The LLRF system will square wave modulate the amplifier input drive with the proper level and timing to preempt the beam loading in the cavity. It is important that the amplifier gain and phase response to this increase in drive be predictable and repeatable. The LLRF system can compensate for nonlinearities in amplifier gain and phase if the nonlinearities are repeatable between beam pulses.

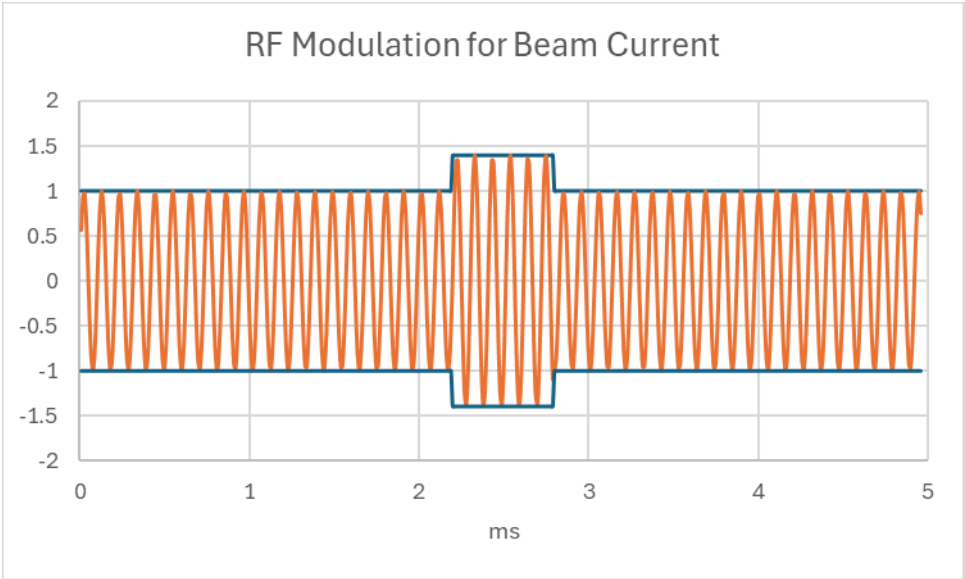

Figure 7-5: Plot illustrating relative increase in RF signal when beam passes through cavity.

7.1.3.2. Cavity Filling

Before beam can be accelerated through the cavities, the cavity voltage needs to be fixed. The cavities are capable of storing a large amount of RF energy when they are at their specified voltage levels. The process of bringing the cavity up to voltage and adding stored energy is called “filling” the cavity with energy. During the filling process, the mechanical dynamics of the cavity cause the resonant frequency of the cavity to move outside the range where the RF amplifier has sufficient overhead to maintain the voltage. In this process, the LLRF system does not hold the drive at a fixed frequency. Instead, it tracks the resonant frequency of the cavity as the cavity fills. Once the cavity is filled and the cavity resonant frequency has stabilized, the LLRF system will fix the drive frequency for beam acceleration.

During the cavity filling process, the power required to drive the cavity is lower than the nominal power required to maintain gradient at fixed frequency. This is because the RF amplifier doesn’t need to compensate for resonant frequency shift in the cavities due to external vibrations. The resonant frequency of the cavity will only move by a few hundred Hertz, so the RF amplifier should have more than enough bandwidth to track the changing frequency of the LLRF input.

7.1.3.3. Power Coupler Conditioning

To accelerate beam effectively in a linear accelerator, the beam line which includes the cavities must be evacuated. Any heavy ions that remain in the beam line could collide with the beam particles, reduce the intensity of the beam and increase the local radiation levels. Sometimes, small amounts of ion contamination can collect on copper surfaces and spoil the vacuum during operation. One method that is used to clean the surfaces in-situ is called conditioning. The surface is driven to a high temperature and voltage to release the ions when beam is not present in the linac. Once the vacuum activity due to the ion release comes down, the surface has been successfully conditioned.

One of the critical copper surfaces that may require conditioning is the RF power coupler that feeds RF into the cavity. To condition the RF power coupler, the cavity is tuned far off resonance, so that little power enters the cavity when the coupler is being powered. To ensure that the release of ions doesn't overwhelm the vacuum system during conditioning, the coupler is driven with pulsed RF to start the process. This use case is one of the few instances where the RF drive level from the LLRF system will go to zero between pulses.

7.1.3.4. Equipment Protection

The health of RF components in the linac are continuously monitored. When the health of an RF component is compromised, the RF protection system will request that the RF amplifier disable its output drive. Examples of compromised health include loss of adequate cooling flow for the circulators or couplers, voltage breakdown in the cavity or coupler, or high component temperature.

Also, if the RF amplifier detects that its own health is compromised, it can inform the RF protection system that it may need to disable the particle beam because one of its cavities may soon no longer accelerate.

7.1.4. Interface Definition

Figure 8.5 shows a block diagram representing the various systems within the linac that interface to the RF amplifiers. Many of the technical specifications are derived from limitations of the different facilities' design and the agreed to interface connections to the systems.

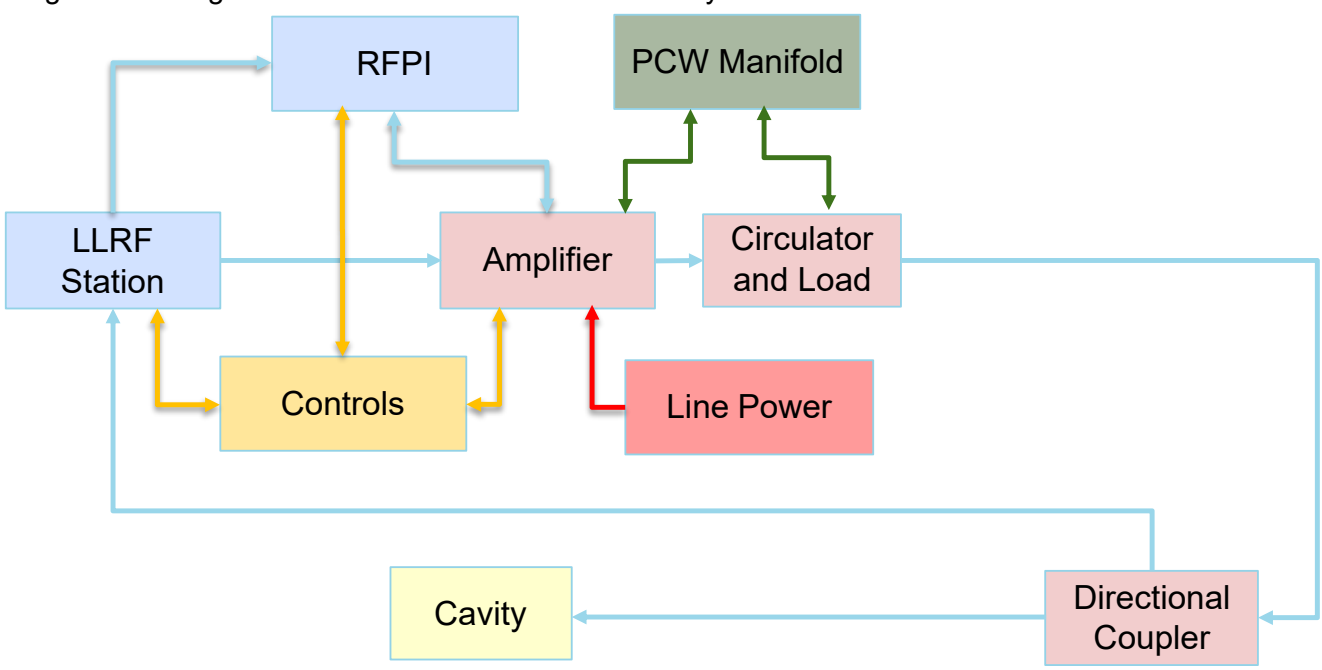

Figure 7-6: Block diagram showing system interfaces to RF amplifier

7.2. Technical Specification

7.2.1. Primary Requirements

	Amplifier Requirements	
A001	Center frequency	325 MHz
A002	Pulsed/CW operation	CW RF
A003	Minimum input drive pulse length	10 us
A004	Minimum available CW output power	20 kW
A005	Gain compression at maximum output power	≤1 dB
A006	Bandwidth at 3dB	≥ 4 MHz
A007	Minimum available output power with PAs down*	18 kW
A008	Load VSWR Handling (Half power to full power)	≤1.4:1 with respect to 50Ω
A009	Output connection	3 1/8” EIA flange
A010	Input connection	N Type
A011	Input VSWR	≤1.2:1 with respect to 50Ω
A012	Input for full rated output	+5 dBm max
A013	Maximum tolerated input power without damage	+15 dBm
A014	Small signal delay over amplifier bandwidth	< 200 ns

* Number of PAs down as defined in requirement F005

7.2.2. RF Stability and harmonics

A015 – Power output will be monotonic and smoothly varying with increasing input drive.

	RF stability	
A015	Gain stability over water temperature variation (±1°C)	< ±1.0%
A016	Gain variation over 30% - 90% specified peak output power	< 1.0 dB
A017	Amplitude Modulation to Phase modulation (20%-90%)	< 5°
A018	Phase stability over water temperature variation (±1°C)	< ±2°
A019	Rise time 10% to 90% specified peak output power	150 nS
A020	Harmonic Power at average power rating (up to 2 GHz)	Better than -25 dBc
A021	Spurious power at average power rating (up to 2 GHz)	Better than -55 dBc

7.2.3. EMI and RF leakage

A022 – RF leakage outside the cabinet shall not exceed 1W/m^2 at 1 meter. If the leakage rate cannot be maintained with the cabinet doors open, the doors shall be interlocked to shut off the drive when accessed.

A023 – EMI should be in compliance with FCC Part 15.

7.2.4. AC Power Requirements

	480 VAC Power requirements	
B001	Input voltage	5-wire 3 phase 480/277 VAC ±5%
B002	Internal input protection	Circuit Breaker
B003	Short circuit current interrupt rating of MCCB	≥ 72 kA
B004	Connection Type	Hardwire
B005	AC to RF output Efficiency at specified peak power*	> 45%
B006	Total Harmonic Distortion at specified peak power	< 30%
B007	Line Phase Current Load Imbalance	< 5%
B008	Power Factor at specified peak power	≥ .9
B009	Inrush current	≤ 240 A over < 10 ms
B010	480V AC discharge via bleeder	95% within 30 seconds**
B011	Max current draw of system	90 A

* Efficiency includes 120V and 480V

** Depending on stored charge

	120VAC Power requirements	
B012	Input voltage	120 VAC ±5
B013	Internal input protection	circuit breaker
B014	Short Circuit Current Interrupt Rating	≥ 10 kA
B015	Max current draw	15 A total

7.2.5. AC to DC Requirements

B016 – DCPS shall enter fault condition if 120VAC is removed, where the DC is zeroed.

7.3. Environmental Conditions

C001	Environment	Temperature controlled room
C002	Humidity of room (non-condensing)	10 to 90%
C003	Temperature of room	25° C±10° C
C004	Maximum permissible heat load dissipated to air at full rated average power.	4.55 kW

7.4. Cooling Specification

C005	Cooling water resistivity*	Not regulated*

C006	Cooling water maximum supply pressure	125 psi
C007	Cooling water nominal supply pressure	100 psi
C008	Maximum cooling water differential pressure	60 psi
C009	Cooling water temperature	28°±4°C
C010	Available water flow per amplifier	25 GPM total (max)
C011	Maximum Water header interfaces	Supply and return connections NPT male 1.5”

*The water will be filtered water, which is de-oxygenated, UV light filtered, and filtered with 0.5 micron particle filtration

7.4.1. Water Connections

C012 - Input water connections should connect to the top of the rack and shall be Male American National Standard Pipe Tapered Thread (MNPT), as defined in ASME B1.20.1

C013 - Water system shall have a drain port available at a low point on the amplifier, and an air bleeder valve near the input of the water.

C014 - The cabinet shall have provisions that prevent water pooling on the bottom of the rack. Internal water leaks should be monitored and provide a leak detector interlock to the internal control module.

C015 - All internal water hoses shall be sufficient length for maintenance. Each hose connection shall be adequate length to be cut back 3 times.

C016 - All internal water connections shall be able to be uninstalled and reinstalled multiple times.

C017 – The water utility will be cooling copper heat sinks from other amplifiers and distribution components. The facility water shall not be exposed to aluminum cooling lines to minimize the erosion of copper.

7.5. Installation and Integration Requirements

These requirements define the specifications that will ensure that the HPRF components can be successfully installed and connected between the beam line and gallery. The layout of the gallery power distribution and equipment racks has already been designed. The gallery floor plan includes reserved areas for installing RF amplifiers. Figure 7.6 shows a sample of the designated areas for the SSR2 SSAs which allow for sufficient aisle way clearance for maintenance. Amplifier cabinet doors may extend outside the defined areas for maintenance purposes. Each block of reserved areas needs to enclose 2 or 3, complete SSA systems. The larger areas are reserved for 3 SSA systems.

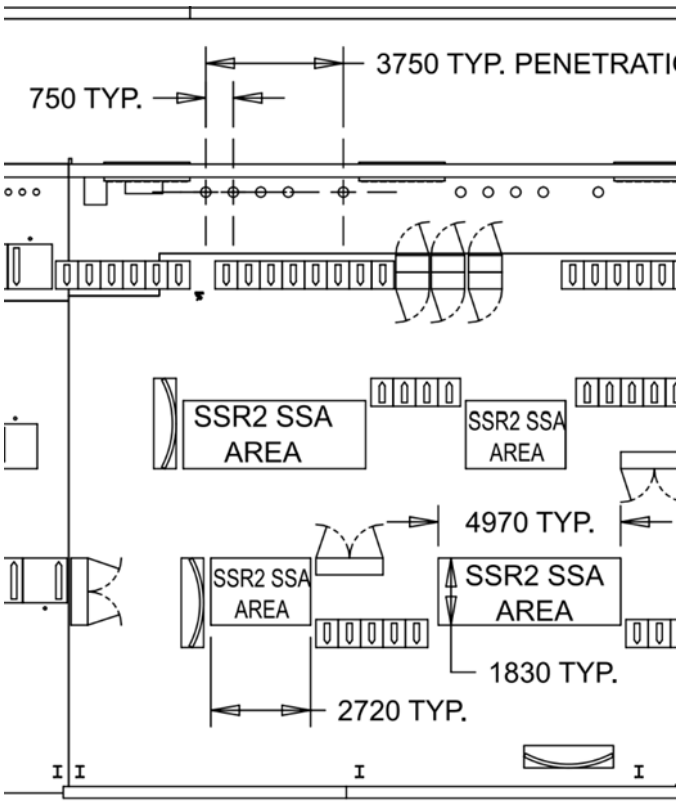

Figure 7-7: Drawing of PIP-II gallery floor plan showing HB650 SSA reserved areas.

	Envelope Requirements	
D001	2 SSA Footprint – Width	< 2.7 m
D002	2 SSA Footprint - Depth	< 1.8 m
D003	Height (including castors and leveling legs)	< 2.44 m
D004	Weight	Less than 1500 lbs total

D005 – No layout should restrict access to sections of the SSA that require periodic maintenance.

D006 - Distance of 1200mm from front and 800 mm from side of designated areas will be available for access into the SSA cabinets.

7.5.1. Rack Requirements

D007 - Each rack shall have a nameplate identifying equipment name, manufacturer, and unique serial number.

D008 - The center of gravity should also be indicated as a diagram on the rack, from both front and side center of gravity should be displayed.

D009 - Center of gravity shall be lower than half the height of the rack.

D010 - Each rack should have casters rated to support the entire weight of the cabinet. Castors should be rigid and not air filled. Castors may be designed to be removable after placing using leveling legs defined in D011.

D011 - Leveling legs must also be present on all 4 corners of the cabinet to remove the weight from the castors.

D012 - Each rack should have four eye bolts or swivel hoist rings, one for each corner, available for crane lifting of the fully assembled rack. Eye bolts or swivel hoist rings shall be marked according to ASME 30.26 and shall be marked with their manufacturer's name or trademark, and the size or rated load.

D013 - Exhaust air temperature of cabinet shall not exceed 45C.

7.5.2. External Connections

D014 – No external connections are to be made from the side panels.

D015 – RF output should exit from the top of the rack.

D016 - RF input must be connected to the top panel of the amplifier to a female N-type connector.

D017 - External interlock inputs must be connected to the top panel.

D018 - A bare-un-painted ground must be available at the top panel of each cabinet to connect to the FNAL building earth ground cable.

7.5.3. Front Panel Interface

E001 - Each amplifier must have a front panel interface with local controls and readbacks. The interface must be on an "accessible face" described in D005.

E002 - Local/Remote toggle switch- This switch shall inhibit commands from external/local controls. When switching between local and remote the amplifier shall not change states. If the amplifier is off and toggled to local it should not turn on.

E003 - In the local and the remote state, the amplifier shall always be inhibited by the loss of the Safety system permit.

E004 - Amplifier shall have separate front panel control for DC on/off and RF On/Off.

E005 - Front panel must also have an RF present indicator, an internal fault indicator, an external fault indicator, and a safety fault indicator.

E006 - Front panel must also have a 480VAC input indicator, as well as a 120VAC input indicator.

E007 – Impedance protected voltage verification test points should be installed on the outside of the amplifier to verify the 480VAC phases.

7.6. Reliability

F001 - The design should be modular and the MTTR figure assumes a partial replacement of failed component.

	Reliability	
F002	Minimum Amplifier MTBF (not including redundancy in F005)	10 years
F003	Maximum MTTR	3 hrs

F004 - MTTR should be achievable given the access constraints denoted in D006.

F005 - The amplifier should be able to reach a peak output power level listed in A010 with up to 10% of the RF PAs disabled.

F006 - The failure of less than 10% of the RF PA or PS modules shall not inhibit the operation of the SSA due to reflected power on other RF PAs.

7.7. Interlock Connections and Readbacks

7.7.1. External Safety Interlock

G001 - The safety interlock shall be a failsafe interlock which opens a contactor on input of the 480VAC line. This interlock should be an active closed potential free relay contact.

G002 - The contactor used shall meet safety standards for an interlock device and must be a separate line from all other interlocks. This interlock must be fail-safe and have no dependance on the state of the control system.

	Name	**Signal Type**	**Connector**	**Cable**
G003	Safety Permit	Active closed potential free relay contact (input)	4-pin Burndy	2-wire twisted pair

			Burndy / Souriau UT06104SH	

7.7.2. External Interlocks

G004 - The SSA Permit, which inhibits the RF output of the amplifier, shall be able to disable the amplifier in a fail-safe manner.

G005 - The amplifier status must also be reflected outward on a line called “SSA Ready”

7.8. Controls

7.8.1. Network Compatibility

H001 - Amplifier must connect to the control system via a copper ethernet cable and be capable of gigabit speeds (1000BASE-T preferred)

H002 - Ethernet must have support STATIC ethernet connections. Connector will be a RJ45.

7.8.2. Configuration

H003 - Network configuration parameters, (IP address, gateway or net mask) address of amplifier must be user configurable. The configuration technique must not require licensed software.

7.8.3. Communication Protocol

H004 - An agreed upon communication protocol shall be established before manufacture.

H005 - If the EPICS IOC is not embedded in the product, ethernet communications shall use a standard industry protocol such as MODBUS/TCP, SNMP, or OPC-UA.

H006 – If EPICS is embedded in the product, it should be base – R7.0.7 or higher. PVs should use PV Access protocol and Normative types.

7.8.4. Minimum Required Readbacks

At a minimum the following binary status should report back to the FNAL control system.

	Name
H007	External interlock trip

H008	Internal interlock trip
H009	DC Power Supply On
H010	DC enabled (if there are separate controls for DC power supplies)
H011	RF enabled
H012	Safety System enabled
H013	Local remote Status

At a minimum the following levels are to be digitized and report back to the FNAL control system

	Name
H014	Input drive power
H015	Output power, both forward and reflected
H016	Amplifier internal temperature
H017	PCW flow
H018	DC power supply voltage and current

7.8.5. Minimum Required Controls

At a minimum, the following shall be available for remote control

	Name
H019	DC On/Off
H020	Reset
H021	RF enable/disable

7.8.6. Data Buffer Specifications

The data buffer will be used to diagnose amplifier trips and potentially coordinate diagnostics of larger scope RF system issues.

H022 – The data buffer will contain samples of all values and status collected by the diagnostic and control system of the amplifier.

H023 - The data buffer will be capable of storing a minimum of 12 hrs of data.

H024 – The data buffer will collect data at a minimum of a 1 Hz repetition rate.

H025 - The data buffer will stop taking data when the status of the amplifier state changes to “not ready”. It will start again after the “not ready” status is removed with a “reset”.

7.9. Transportation

Amplifiers shall undergo an outgoing photo inspection to be sent to FNAL before shipment.

7.10. Documentation

Final documentation upon delivery shall include the following:

- Assembly manual (if assembly required after shipping).
- Operation manual.
- Programming/Remote Access Manual
- Schematic of Power Distribution (for electrical safety inspection)
- Maintenance manual (including tuning/verification procedures for amplifier modules)
- Test results of each amplifier
- Test results of amplifier subcomponents as defined in section 8

8. VERIFICATION & QUALITY ASSURANCE PROVISIONS

Testing requirements for the assembled amplifier are defined below.

Test results shall be provided for any class of amplifier subcomponents that has more than a 10% chance of failing in less than 5 years. This is to allow for proper maintenance when replacement in the amplifier is required.

Requirement No	Data Deliverable
A001, A006, A014	Frequency response of amplifier (gain and phase)
A003	Trace of power output for 10us pulse at peak power drive
A004	Measurement of power output at rated CW, average power
A005	Measurement of power output at rated peak power
A005, A016	Plot showing ratio of output power to drive power as output power increased from 30% to 100% rated maximum power
A007	Measurement of power output at rated peak power and input drive power, with one PA module disabled

A008	Verify reverse power interlock (if amplifier has a limit on allowable output return loss)
A011	Measurement of input drive return loss
A012	Measurement of input drive power at rated peak power.
A015	Plot showing ratio of output power to drive power at peak rated power as water temperature supply varied ±1°C from specified supply temperature.
A017	Plot showing relative phase of output power to drive power as output power increased from 20% to 90% rated maximum power
A018	Plot showing relative phase of output power to drive power at peak rated power as water temperature supply varied ±1°C from specified supply temperature.
A019	Plot showing rise time a amplifier output when pulsed from 10% to 90% of peak rated power.
A020-A021	Spectrum of amplifier output power at rated peak power with harmonics and largest spurious signals marked
A022	Measurement of RF levels outside of amplifier while running CW at rated peak power
B005, B007, B011, B015	Measurement of 3-phase and single phase input power currents when amplifier running CW at rated peak power specification
B006	Spectrum analysis of 3-phase current when amplifier running CW at rated peak power specification
B008	Measurement of relative phase of 3-phase current with respect to voltage when amplifier running CW at rated peak power specification
B009	Plot of transient response of 3-phase input power current when 3-phase breakers are activated and when DC power supplies are turned on
B010	Plot of transient response of 3-phase input power current when 3-phase breakers are disabled (amplifier in off state prior to disable)

B016	Result of DC power supply status after 120V power removed when DC is on
C004	Calculate missing energy from 3-phase current measurement, RF power output, and heat loss to cooling fluids
C006	Result of pressurizing cooling water interface up to 125psi
C008	Measure pressure drop of cooling water through amplifier at specified nominal flow rate
C014	Result of water leak test
D005	Measurement of weight of entire system (may be done in pieces)
D014	Measurement of exhaust air temperature when amplifier is running CW at rated peak power
E002	Result of toggling Local/Remote switch
E003, G001	Result of Safety System Permit test
E004	Picture of front panel indicators
F005-F006	Maximum peak power allowed with one PA module disabled
G004	Result of external interlocks testing
G005	Result of SSA Ready status testing
H002-H003	Verification that static IP address can be modified
H007 – H013	Verification of ability to read status from remote connection
H014 – H018	Verification of ability to read analog values from remote connection
H019 – H021	Verification of ability to change control states from remote connection
H022 – H025	Sample data dump from data buffer

9. APPLICABLE STANDARDS

The system shall abide by the identified standards.

Electrical Safety
• NFPA 70 – NEC 2017 Edition
• UL 61010-1 Safety Requirements for Electrical Equipment for Measurement, Control and Laboratory Use
Mechanical Safety

• ASME B30.9 Rigging Hardware
Radiation Safety
• IEEE C95.1 Standard
EMI
• FCC Part 15

Additional standards requirements that are not listed in the general list above shall be included in the Technical Requirements table and in the Functional Requirements section.

Amplifier should be listed or field inspected by NRTL. Vendor equivalency or alternatives to a NRTL listing or field inspection must be approved by FNAL before award.