LIGHTING FIXTURE SYMBOLS

CEILING	WALL	
Aa		609mm x 1219mm [2'x4'] FLUORESCENT FIXTURE LOWER CASE LETTER INDICATES SWITCHING LEG(S) UPPER CASE LETTER INDICATES FIXTURE TYPE, REFER TO FIXTURE SCHEDULE
		609mm x 1219mm [2'x4'] FLUORESCENT FIXTURE – CROSS-HATCHING INDICATES FIXTURE EQUIPPED WITH EMERGENCY BATTERY PACK.
		609mm x 609mm [2'x2'] FLUORESCENT FIXTURE
		PENDANT OR SURFACE CEILING MOUNTED FLUORESCENT FIXTURE
		WALL-MOUNTED FLUORESCENT FIXTURE
		DOWNLIGHT
		DOWNLIGHT – CROSS-HATCHING INDICATES FIXTURE EQUIPPED WITH EMERGENCY BATTERY PACK.
		WARNING LIGHT
		PENDANT MOUNTED FIXTURE
		EXIT LIGHT, DARKENED SECTION(S) DENOTE FACE(S). USE DIRECTIONAL ARROWS WHERE INDICATED.
		WALL-MOUNTED FIXTURE

RECEPTACLES AND SWITCHES

25 TV — DUPLEX RECEPTACLE OUTLET, MOUNTED AT 457mm [18"] A.F.F. U.O.N.
"TV" DENOTES TELEVISION RECEPTACLE – MOUNTED AT 213cm [84"] A.F.F. U.O.N.
"#" NUMBER DENOTES CIRCUIT BREAKER NUMBER.
"GFI" DENOTES GROUND FAULT INTERRUPTER
"AC" DENOTES INSTALLATION ABOVE COUNTER BACKSPLASH THE COVERPLATE DOES NOT INTERFERE WITH BACKSPLASH.
"IG" DENOTES CIRCUIT AS AN ISOLATED GROUND
"C" DENOTES STANDARD RECEPTACLE WITH BLUE FINISH
"W" DENOTES RECEPTACLE CIRCUITED TO A CLOTHES WASHER
"D" DENOTES RECEPTACLE CIRCUITED TO A CLOTHES DRYER

QUADPLEX RECEPTACLE OUTLET, MOUNTED AT 457mm [18"] A.F.F. U.O.N.

SINGLE RECEPTACLE OUTLET, MOUNTED AT 457mm [18"] A.F.F. U.O.N.

SPECIAL PURPOSE OUTLET, ELECTRICAL CHARACTERISTICS AS SPECIFIED ON PLANS.

FLUSH-MOUNTED FLOOR DUPLEX RECEPTACLE.

FLUSH-MOUNTED FLOOR QUADPLEX RECEPTACLE.

COMBINATION FLUSH-MOUNTED FLOOR QUADPLEX RECEPTACLE & TELE/DATA

CEILING-MOUNTED DUPLEX RECEPTACLE.

$ — SINGLE POLE SWITCH, MOUNTED AT 1219mm [48"] A.F.F.

$a — SINGLE POLE SWITCH, MOUNTED AT 1219mm [48"] A.F.F., SUBSCRIPT INDICATES SWITCHING LEG

$3 — 3-WAY SWITCH, MOUNTED AT 1219mm [48"] A.F.F.

$P — PILOT LIGHT SWITCH, MOUNTED AT 1219mm [48"] A.F.F.

$M — MOTOR RATED SWITCH (SINGLE POLE OR DOUBLE POLE) MOUNTED AT EQUIPMENT, U.O.N.

$OS — OCCUPANCY SENSOR SWITCH, MOUNTED AT 1219mm [48"] A.F.F.

ab $OS — OCCUPANCY SENSOR/2-LEVEL SWITCH, MOUNTED AT 48" A.F.F., SUBSCRIPT "a", AND "b" INDICATES SWITCHING LEG

$R/L — PROJECTOR SCREEN RAISE/LOWER SWITCH, MOUNTED AT 1219mm [48"] A.F.F.

$WP — NEMA 3R RATED SWITCH

OS — 360-DEGREE OCCUPANCY SENSOR, CEILING MOUNTED.

OS — 180-DEGREE OCCUPANCY SENSOR, CEILING MOUNTED.

$D — DIMMER SWITCH, MOUNTED AT 1219mm [48"] A.F.F.

PC — PHOTOCELL SENSOR OR PHOTOELECTRIC SWITCH

DL — DAYLIGHTING SYSTEM PHOTOSENSOR

CS — CONTROL STATION

CONDUIT, RACEWAY & WIRING SYMBOLS

CONDUIT CONCEALED

CONDUIT IN SLAB OR UNDERGROUND

J — JUNCTION BOX

J — JUNCTION BOX FLUSH-MOUNTED IN FLOOR

J — WALL MOUNTED JUNCTION BOX

A-25,27,29 — HOMERUN TO PANELBOARD OR DEVICE, TICK MARKS DENOTE QUANTITY OF #12 WIRES WHEN MORE THAN THREE ARE REQUIRED.
" ⏚ " DENOTES GROUND CONDUCTOR
" | " DENOTES NEUTRAL CONDUCTOR
" ı " DENOTES HOT CONDUCTOR
"A-25,27,29" DENOTES PANELBOARD "A", AND CIRCUIT BREAKER NUMBER(S).
"(PART)" DENOTES CIRCUIT ALSO SHOWN ELSEWHERE ON PLANS

EQUIPMENT CONNECTION

UP — UP — UNDERGROUND POWER DUCT BANK – PRIMARY

US — US — UNDERGROUND POWER DUCT BANK – SECONDARY

CT — CABLE TRAY – COMMUNICATIONS

POWER AND CONTROL PLAN SYMBOLS

DISTRIBUTION PANELBOARD

SWITCHBOARD

PANELBOARD – MOUNT SUCH THAT TOP CIRCUIT BREAKER IS NO MORE THAN 1828mm [72"] A.F.F.

SECURITY PANEL

60/3 — NON-FUSED DISCONNECT SWITCH MOUNTED AT EQUIPMENT – WHEN WALL MOUNTING IS INDICATED, MOUNT WITH CENTER OF HANDLE AT 1524mm [60"] A.F.F.
"60" DENOTES AMPERAGE RATING, "3" DENOTES NUMBER OF POLES.
DISCONNECTS SHALL BE 30AMP/3POLE UNLESS OTHERWISE NOTED.

60/3 — COMBINATION MOTOR STARTER AND DISCONNECT SWITCH – MOUNT WITH CENTER OF HANDLE AT 1524mm [60"] A.F.F.
"60" DENOTES AMPERAGE RATING, "3" DENOTES NUMBER OF POLES.

T — DRY TYPE TRANSFORMER

VFD — VARIABLE FREQUENCY DRIVE PROVIDED WITH MECHANICAL EQUIPMENT

GROUNDING BAR

XX / Y — EQUIPMENT TAG
"XX" DENOTES EQUIPMENT TYPE, "Y" DENOTES EQUIPMENT NUMBER

MOTOR

LIGHTING CONTACTOR

LIGHTNING PROTECTION & GROUNDING

LIGHTNING PROTECTION AIR TERMINAL

GROUND ROD

GROUNDING TEST WELL

EXOTHERMIC CONNECTION

LIGHTNING PROTECTION CABLE

G — GROUNDING CONDUCTOR

ONE LINE DIAGRAM SYMBOLS

N — NEUTRAL BUS

G — GROUND BUS

400A/3 — CIRCUIT BREAKER
400 AMPERE, 3 POLE

TRANSFORMER WITH GROUNDED SECONDARY – KVA, SIZE AND VOLTAGE RATIO AS NOTED

GROUND CONNECTION

5 — MOTOR, NUMBER INDICATES HORSEPOWER

M — METER

CURRENT TRANSFORMER

TRANSFER SWITCH

SPD — SURGE PROTECTION DEVICE

EQUIPMENT ENCLOSURE

CIRCUIT SCHEDULE

GENERATOR

T — TRANSFORMER, PAD-MOUNTED

DISCONNECT

FUSE

400A 3P / 350AF — FUSED DISCONNECT SWITCH, 3 POLE,
400 AMPERE RATED SWITCH WITH
350 AMPERE RATED FUSE

PQM — POWER QUALITY METER

SHORT CIRCUIT CURRENT SCHEDULE KEY

SHORT CIRCUIT CURRENT AVAILABLE AT POINT INDICATED

ABBREVIATIONS

A	AMPERE
AC	ABOVE COUNTER
ACU	MASS NOTIFICATION AUTONOMOUS CONTROL UNIT
AFF, A.F.F.	ABOVE FINISHED FLOOR
AF	AMPERE FUSE
ATS	AUTOMATIC TRANSFER SWITCH
AWG	AMERICAN WIRE GAUGE
BPS	BOOSTER POWER SUPPLY
℄	CENTER LINE
COR	CONTRACTING OFFICER'S REPRESENTATIVE
DDC	DIRECT DIGITAL CONTROL
D	DEDICATED CIRCUIT
DP	DISTRIBUTION PANEL
(E)	EXISTING
EC	EMPTY CONDUIT OR ELECTRICAL CONTRACTOR
EM	EMERGENCY
EWC	ELECTRIC WATER COOLER
FACP	FIRE ALARM CONTROL PANEL
G, GND	GROUND
GC	GENERAL CONTRACTOR
GF/CI	GOVERNMENT FURNISHED/CONTRACTOR INSTALLED
GF/GI	GOVERNMENT FURNISHED/GOVERNMENT INSTALLED
GFE	GOVERNMENT FURNISHED EQUIPMENT
GFI	GROUND FAULT CURRENT INTERRUPTER
IG	ISOLATED GROUND
ISC	SHORT CIRCUIT CURRENT
JB	JUNCTION BOX
KAIC	KILO – AMPERES INTERRUPTING CAPACITY
KCMIL	THOUSAND CIRCULAR MILLIMETERS
KVA	KILOVOLT AMPS
IG	ISOLATED GROUND
LTG	LIGHTING
MCB	MAIN CIRCUIT BREAKER
MECH	MECHANICAL
MGB	MAIN GROUNDING BUSBAR
MH	MOUNTING HEIGHT
MLO	MAIN LUGS ONLY
MNCP	MASS NOTIFICATION CONTROL PANEL
MSBD	MAIN SWITCHBOARD
MTD	MOUNTED
NL	NIGHT LIGHT
NTS	NOT TO SCALE
PA	PUBLIC ADDRESS
PAS	PREACTION SYSTEM RELEASING PANEL
PC	PHOTOCELL
PWR	POWER
RECP	RECEPTACLE
REF.	REFRIGERATOR
RM	ROOM
SPD	SURGE PROTECTION DEVICE
ST	SHUNT TRIP
TC	TIME CLOCK
TGB	TELECOMMUNICATIONS GROUNDING BUSBAR
TMGB	TELECOMMUNICATIONS MAIN GROUNDING BUSBAR
TRANS	TRANSCEIVER
TTB	TELEPHONE TERMINAL BOARD
TVSS	TRANSIENT VOLTAGE SURGE SUPPRESSION
TYP	TYPICAL
U.O.N.	UNLESS OTHERWISE NOTED
VFD	VARIABLE FREQUENCY DRIVE
W/	WITH
WP	WEATHERPROOF

A / E-401 — SECTION CUT

A / E-501 — DETAIL BUBBLE

1 — KEYED NOTE TAG

FLOOR BOX SCHEDULE

SYMBOL	POWER	COMM	MANUFACTURER	MODEL	DESCRIPTION	AREA
C	(1) QUADPLEX, C	(4) PORTS MAX.	WIREMOLD	RFB4-CI-1 S38BBTCAL	RECESSED FLOOR BOX, CAST IRON, BRUSHED ALUMINUM, FLANGED COVER	CONCRETE FLOOR

GENERAL NOTES:

1. INSTALLATION OF ALL LIGHT FIXTURES SHALL BE COORDINATED WITH DUCT WORK, PIPING AND EXISTING STRUCTURES. CHANGES SHALL BE MADE AS REQUIRED WITHOUT ADDITIONAL COST TO THE GOVERNMENT.
2. HEIGHTS INDICATED ARE TO THE TOP OF THE BOX OR DEVICE, WHICHEVER IS LOWER.
3. THE MINIMUM CONDUCTOR SIZE FOR POWER AND LIGHTING SHALL BE #12 AWG, AND THE MINIMUM CONDUCTOR SIZE FOR CONTROL SHALL BE #14, UNLESS OTHERWISE NOTED.
4. ALL POWER CONDUITS SHALL BE 20mm [3/4"] MINIMUM, UNLESS OTHERWISE NOTED. ALL TELECOM CONDUITS SHALL BE 25mm [1"] MINIMUM, UNLESS OTHERWISE NOTED.
5. DRAWINGS WERE PREPARED FROM EXISTING DRAWINGS AND FIELD OBSERVATIONS. CONTRACTOR SHALL FIELD VERIFY EXISTING CONDITIONS FOR ACCURACY.
6. CONTRACTOR SHALL COORDINATE THE LOCATION OF ALL HVAC, PLUMBING, FIRE PROTECTION AND ELECTRICAL EQUIPMENT TO ENSURE COMPLIANCE WITH ANG ETL 01-1-1, PARAGRAPH 16.1.11. DO NOT ALLOW PIPING, DUCTS, AND OTHER EQUIPMENT TO PASS THROUGH OR OVER THE SPACE RESERVED FOR ELECTRICAL EQUIPMENT. UNDER NO CIRCUMSTANCES SHALL WATER PIPING (DOMESTIC, HVAC, ETC.) BE RUN OVER TOP OF OR WITHIN 0.9 METERS [3 FEET] LATERALLY FROM ELECTRICAL PANELS, TRANSFORMERS, SWITCHES, DISCONNECTS OR SIMILAR DEVICES. USE OF DRIP PANS AS AN ALTERNATIVE IS NOT ACCEPTABLE PRACTICE.

METRIC/IMPERIAL RELATIONSHIPS

DISTANCE	1" = 25.4 mm
	1' = 0.305 m
AREA	1 ft² = 0.093 m²
VOLUME	1 ft³= 0.028 m³
VELOCITY	1 fpm = 0.005 m/s
FLOW	1 cfm = 0.472 l/s
	1 gpm = 0.063 l/s
TEMPERATURE	Tc = (5/9)*(Tf-32)
	Tf = Fahrenheit Temperature
	Tc = Celsius Temperature
POWER	1000 btu/hr = 0.293 kW
	1 ton (cooling) = 3.516 kW
	1 hp = 0.746 kW
FORCE	1 lb = 0.454 kg
PRESSURE	1 psf = 4.882 kg/m²
	1 psi = 6.895 kPa
	1" water = 0.249 kPa
LIGHT	1 ft-c = 10.764 lux

1 / E-001 SYMBOLS AND ABBREVIATIONS
SCALE: N.T.S.

leidos
LEIDOS
622 EMERSON ROAD, SUITE 600
St. Louis, MO. 63141
314-821-7017
www.leidos.com

MARK	REVISION	DATE
1	AS-BUILT RECORD DRAWINGS	05-12-14
0	TYPE B-3 FINAL SUBMITTAL	02-11-11

COORDINATION SIGNATURES: USER, BCE, FIRE, ENVIRO, SAFETY, SECURITY, COMM

ILLINOIS AIR NATIONAL GUARD
ABRAHAM LINCOLN CAPITOL AIRPORT - SPRINGFIELD, IL
PROJECT TITLE: W9QFYG-09-D-0006 9501 ADAL COMMUNICATIONS FACILITY, BLDG P-8
SUBMITTAL LEVEL: AS-BUILT RECORD DRAWINGS
SHEET TITLE: SYMBOLS AND ABBREVIATIONS

DRAWN BY: AMF
APPROVED BY: TNK
BASE ENGINEER: LT. COL. CODERKO
DATE: 12 MAY 2014
PROJECT NO. (TWUR NO.): DCFT052022

E-001

PLOT DATE: 5/12/2014 11:35:15 AM
FILE LOCATION: C:\615093030 5 ADAL COMM P8\CAD\E\930305E-001.DWG
LAST SAVED BY: LADDA

GENERAL NOTES:

1. CROSS HATCHING INDICATES EQUIPMENT SUCH AS PANELS , RECEPTACLES, TELE/DATA OUTLETS, STARTERS, DISCONNECTS, LIGHTING, SWITCHES, WIRE, CONDUIT, ETC. SHALL BE DEMOLISHED. CONTRACTOR SHALL REMOVE ALL ASSOCIATED CONDUIT AND WIRE BACK TO EQUIPMENT INDICATED TO REMAIN. CONTRACTOR MAY REUSE EXISTING CONDUIT AND BOXES IN THEIR EXISTING LOCATIONS, PROVIDED THAT THEY ARE IN GOOD CONDITION, PROPERLY SUPPORTED AND DO NOT INTERFERE WITH NEW WORK.

2. MATERIALS THAT ARE DEMOLISHED SHALL BE REMOVED FROM THE PREMISES AND DISPOSED OF ACCORDING TO CONTRACT DOCUMENTS AND APPLICABLE CODES AND REGULATIONS.

3. DEMOLITION DRAWING WAS PREPARED FROM EXISTING DRAWINGS AND FIELD OBSERVATIONS, THEREFORE EXACT LOCATIONS AND QUANTITIES OF EXISTING EQUIPMENT MAY DEVIATE FROM THE DRAWINGS. CONTRACTOR SHALL FIELD VERIFY ALL ITEMS REQUIRED FOR DEMOLITION.

4. AT ALL LOCATIONS WHERE VISIBLE ITEMS ARE TO BE REMOVED, PATCH AND REPAIR AS INDICATED IN SPECIFICATION SECTION "CUTTING AND PATCHING" – 01 73 29.

5. IT IS THE INTENT OF THIS DEMOLITION DRAWING THAT ALL ELECTRICAL EQUIPMENT, EXCEPT FOR SWITCH ROOM 38, SHALL BE REMOVED FROM THE BUILDING. WITHIN SWITCH ROOM 138, ONLY LIGHTING EQUIPMENT SHALL BE REMOVED.

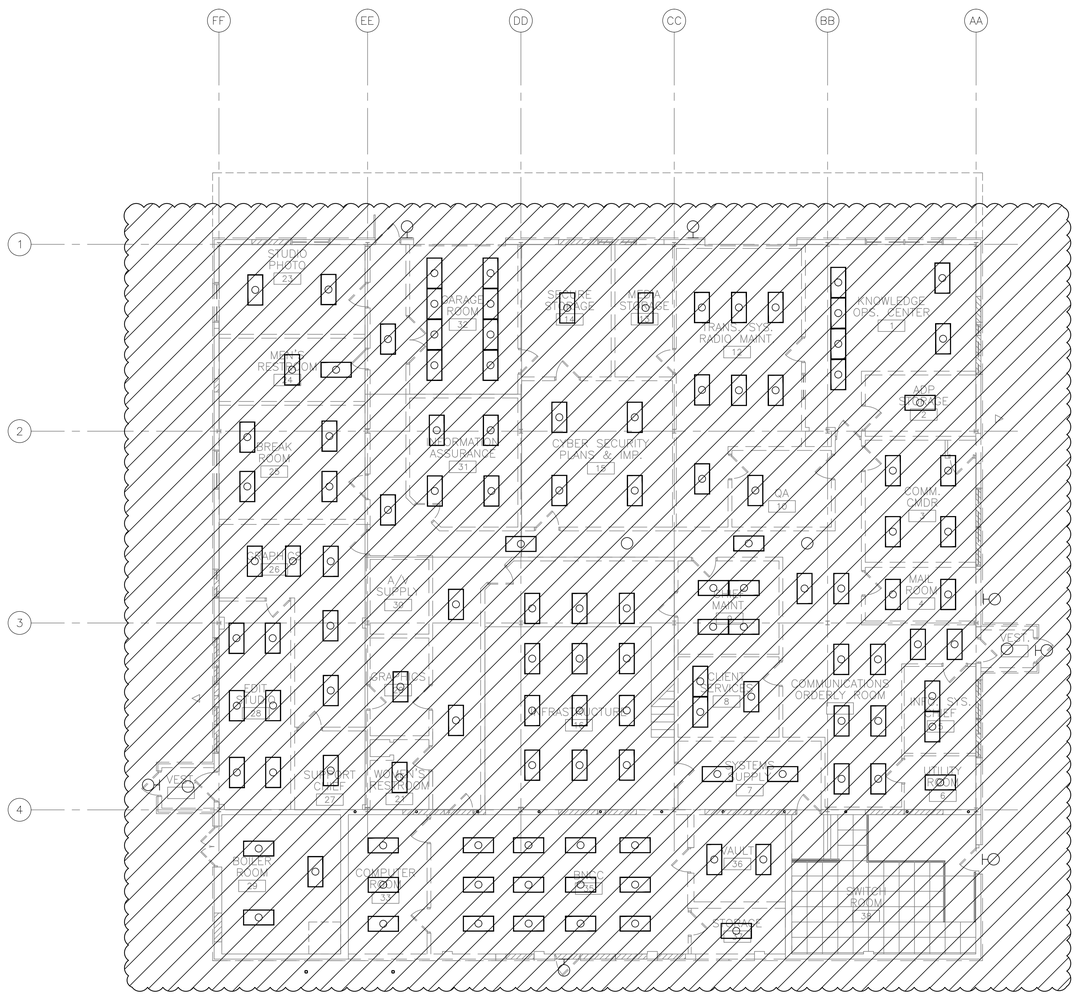

PLAN NORTH

1 / ED101 LIGHTING DEMOLITION PLAN

SCALE: 1/8" = 1'-0"

2438 1219 0 2438 4877mm
(8') (4') (8') (16')
1/8" = 1'-0"

PLOT DATE: 5/12/2014 11:35:19 AM
FILE LOCATION: C:\61509305 ADAL COMM P8\CAD\E\930305ED101.DWG
LAST SAVED BY: FINLEYAM

leidos
LEIDOS
622 EMERSON ROAD, SUITE 600
St. Louis, MO. 63141
314-821-7017
www.leidos.com

MARK	REVISION	DATE
1	AS-BUILT RECORD DRAWINGS	05-12-14
0	TYPE B-3 FINAL SUBMITTAL	02-11-11

COORDINATION SIGNATURES

		DATE
USER		
BCE		
FIRE		
ENVIRO		
SAFETY		
SECURITY		
COMM		

ILLINOIS
AIR NATIONAL GUARD
ABRAHAM LINCOLN CAPITOL AIRPORT - SPRINGFIELD, IL

PROJECT TITLE: W9OFYQ-09-D-0006 9E01 ADAL COMMUNICATIONS FACILITY, BLDG P-8
SUBMITTAL LEVEL: AS-BUILT RECORD DRAWINGS
SHEET TITLE: LIGHTING DEMOLITION PLAN

DRAWN BY:	APPROVED BY:
TJN	TNK
BASE ENGINEER: LT. COL. CODERKO	
DATE: 12 MAY 2014	PROJECT NO. (TYLR NO.) DCFT052022

ED101

GENERAL NOTES:

1. CROSS HATCHING INDICATES EQUIPMENT SUCH AS PANELS , RECEPTACLES, TELE/DATA OUTLETS, STARTERS, DISCONNECTS, LIGHTING, SWITCHES, WIRE, CONDUIT, ETC. SHALL BE DEMOLISHED. CONTRACTOR SHALL REMOVE ALL ASSOCIATED CONDUIT AND WIRE BACK TO EQUIPMENT INDICATED TO REMAIN. CONTRACTOR MAY REUSE EXISTING CONDUIT AND BOXES IN THEIR EXISTING LOCATIONS, PROVIDED THAT THEY ARE IN GOOD CONDITION, PROPERLY SUPPORTED AND DO NOT INTERFERE WITH NEW WORK.

2. MATERIALS THAT ARE DEMOLISHED SHALL BE REMOVED FROM THE PREMISES AND DISPOSED OF ACCORDING TO CONTRACT DOCUMENTS AND APPLICABLE CODES AND REGULATIONS.

3. DEMOLITION DRAWING WAS PREPARED FROM EXISTING DRAWINGS AND FIELD OBSERVATIONS, THEREFORE EXACT LOCATIONS AND QUANTITIES OF EXISTING EQUIPMENT MAY DEVIATE FROM THE DRAWINGS. CONTRACTOR SHALL FIELD VERIFY ALL ITEMS REQUIRED FOR DEMOLITION.

4. AT ALL LOCATIONS WHERE VISIBLE ITEMS ARE TO BE REMOVED, PATCH AND REPAIR AS INDICATED IN SPECIFICATION SECTION "CUTTING AND PATCHING" – 01 73 29.

5. IT IS THE INTENT OF THIS DEMOLITION DRAWING THAT ALL ELECTRICAL EQUIPMENT, EXCEPT FOR SWITCH ROOM 38, SHALL BE REMOVED FROM THE BUILDING. WITHIN SWITCH ROOM 38, ONLY LIGHTING EQUIPMENT AND SPECIFIC EQUIPMENT IDENTIFIED SHALL BE REMOVED.

6. UNDERGROUND CONDUIT MAY BE ABANDONED IN PLACE PROVIDED IT DOES NOT INTERFERE WITH NEW WORK AND IS CAPPED OFF (WATERTIGHT) 150MM [6"] MINIMUM BELOW FINISHED GRADE.

KEYED NOTES (THIS SHEET ONLY):

1. REMOVE EXISTING TRANSFORMER, TRANSFORMER PAD, GROUNDING, SECONDARY FEEDER INTO BUILDING, AND SWITCHBOARD. NOTE: REMOVAL OF THIS EQUIPMENT MUST BE COORDINATED TO ENSURE POWER TO SWITCH ROOM 38. REFER TO KEY NOTE 3.
2. REMOVE PRIMARY FEEDER CONDUCTOR/CONDUIT TO EXISTING TRANSFORMER.
3. SWITCH ROOM 138 SHALL REMAIN IN OPERATION THROUGH OUT DEMOLITION AND REMODEL OF THIS FACILITY. CONTRACTOR SHALL COORDINATE TEMPORARY POWER REQUIREMENTS WITH CONTRACTING OFFICER.
4. EXISTING GENERATOR SHALL BE SALVAGED AND RETURNED TO BASE. PENETRATIONS THRU WALL SHALL BE REPAIRED.
5. EXISTING ATS SHALL BE SALVAGED AND RETURNED TO BASE.

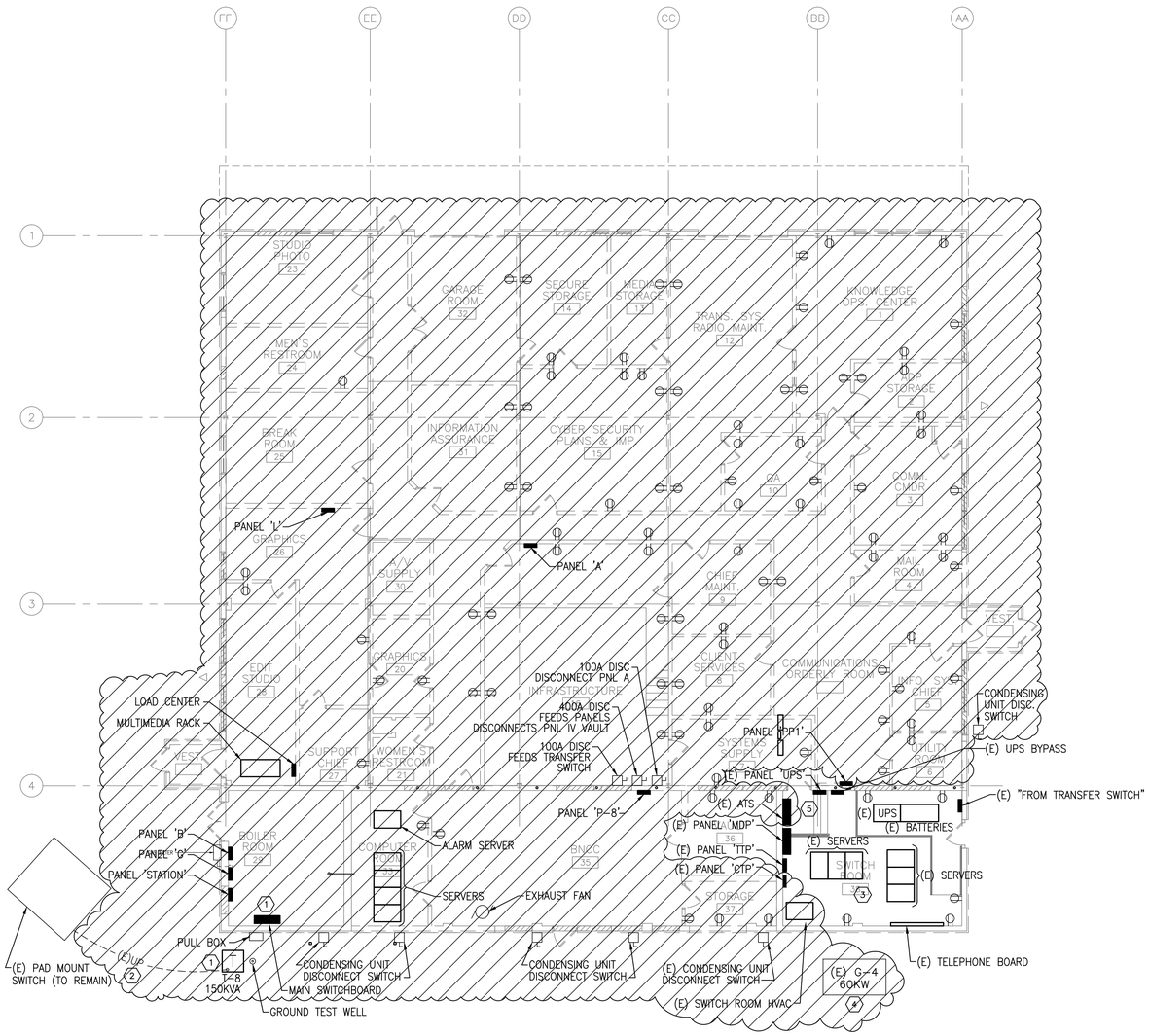

PLAN NORTH

1 ED102 POWER DEMOLITION PLAN

SCALE: 1/8" = 1'-0"

2438 1219 0 2438 4877mm
(8') (4') (8') (16')
1/8" = 1'-0"

leidos
LEIDOS
622 EMERSON ROAD, SUITE 600
St. Louis, MO. 63141
314-821-7017
www.leidos.com

MARK	REVISION	DATE
1	AS-BUILT RECORD DRAWINGS	05-12-14
0	TYPE B-3 FINAL SUBMITTAL	02-11-11

COORDINATION SIGNATURES

USER
BCE
FIRE
ENVIRO
SAFETY
SECURITY
COMM

ILLINOIS
AIR NATIONAL GUARD
ABRAHAM LINCOLN CAPITOL AIRPORT - SPRINGFIELD, IL

PROJECT TITLE: W9OFYQ-09-D-0006 9E01 ADAL COMMUNICATIONS FACILITY, BLDG P-8
SUBMITTAL LEVEL: AS-BUILT RECORD DRAWINGS
SHEET TITLE: POWER DEMOLITION PLAN

DRAWN BY: AMF
APPROVED BY: TNK
BASE ENGINEER: LT. COL. CODERKO
DATE: 12 MAY 2014
PROJECT NO. (TYALR NO.): DCFT052022

ED102

PLOT DATE: 5/12/2014 11:35:24 AM
FILE LOCATION: C:\61509305 ADAL COMM P8\CAD\E\930305ED102.DWG
LAST SAVED BY: FINLEYAM

GENERAL NOTES:

1. REFERENCE LIGHT FIXTURE SCHEDULE ON DRAWING E-604 FOR LIGHT FIXTURE TYPES REFERENCED.
2. PROVIDE ACCESS PANELS AND POWER PACKS AS REQUIRED FOR CEILING MOUNTED OCCUPANCY SENSORS.
3. LIGHTING FIXTURES WITH EMERGENCY BATTERY BALLASTS SHALL BE PROVIDED WITH ADDITIONAL UNSWITCHED "HOT LEG" IN ORDER TO OPERATE PROPERLY. EXIT SIGNS SHALL BE PROVIDED WITH UNSWITCHED CIRCUIT.
4. HOMERUN CIRCUITS INDICATED WITH "(PART.)" AT END OF CIRCUIT INDICATES THAT CIRCUIT IS ALSO SHOWN IN OTHER LOCATIONS ON DRAWING FOR OTHER ADDITIONAL EQUIPMENT. OTHER LOCATIONS MAY BE ON OTHER DRAWINGS.

KEYED NOTES (THIS SHEET ONLY):

1. COORDINATE LIGHT FIXTURE LAYOUT WITH OTHER EQUIPMENT.

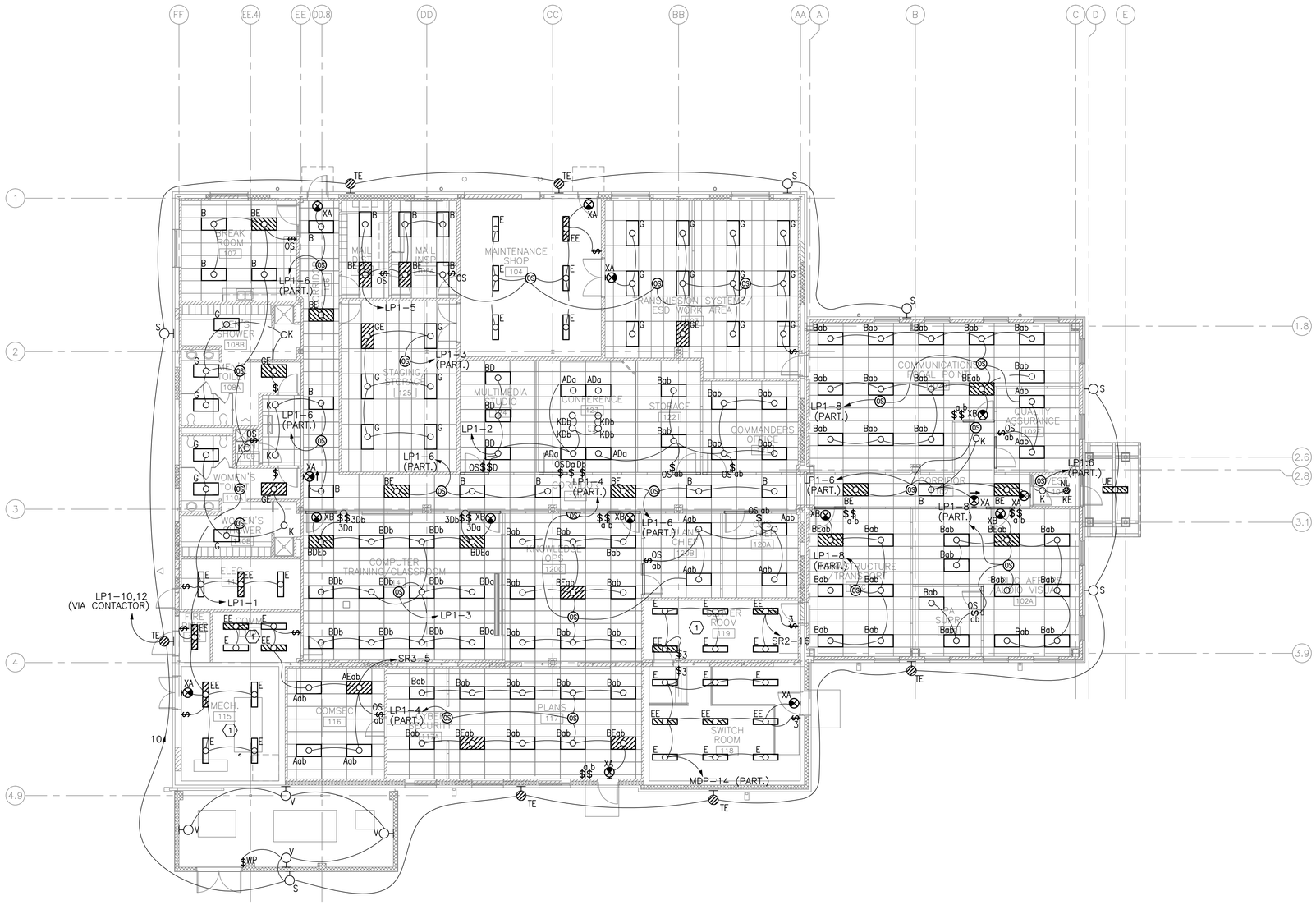

PLAN NORTH

1 E-101 LIGHTING PLAN

SCALE: 1/8" = 1'-0"

2438 1219 0 2438 4877mm
(8') (4') (8') (16')
1/8" = 1'-0"

leidos
LEIDOS
622 EMERSON ROAD, SUITE 600
St. Louis, MO. 63141
314-821-7017
www.leidos.com

MARK	REVISION	DATE
1	AS-BUILT RECORD DRAWINGS	05-12-14
0	TYPE B-3 FINAL SUBMITTAL	02-11-11

COORDINATION SIGNATURES

		DATE
USER		
BCE		
FIRE		
ENVIRO		
SAFETY		
SECURITY		
COMM		

ILLINOIS
AIR NATIONAL GUARD
ABRAHAM LINCOLN CAPITOL AIRPORT - SPRINGFIELD, IL

PROJECT TITLE: W9GFYQ-09-D-0006 (W01) ADAL COMMUNICATIONS FACILITY, BLDG P-8
SUBMITTAL LEVEL: AS-BUILT RECORD DRAWINGS
SHEET TITLE: LIGHTING PLAN

DRAWN BY:	APPROVED BY:
AMF	TNK
BASE ENGINEER: LT. COL. CODERKO	
DATE: 12 MAY 2014	PROJECT NO. (TWUR NO.) DCFT052022

E-101

PLOT DATE: 5/12/2014 11:35:27 AM
FILE LOCATION: C:\61509305 ADAL COMM P8\CAD\E\930305E-101.DWG
LAST SAVED BY: FINLEYAM

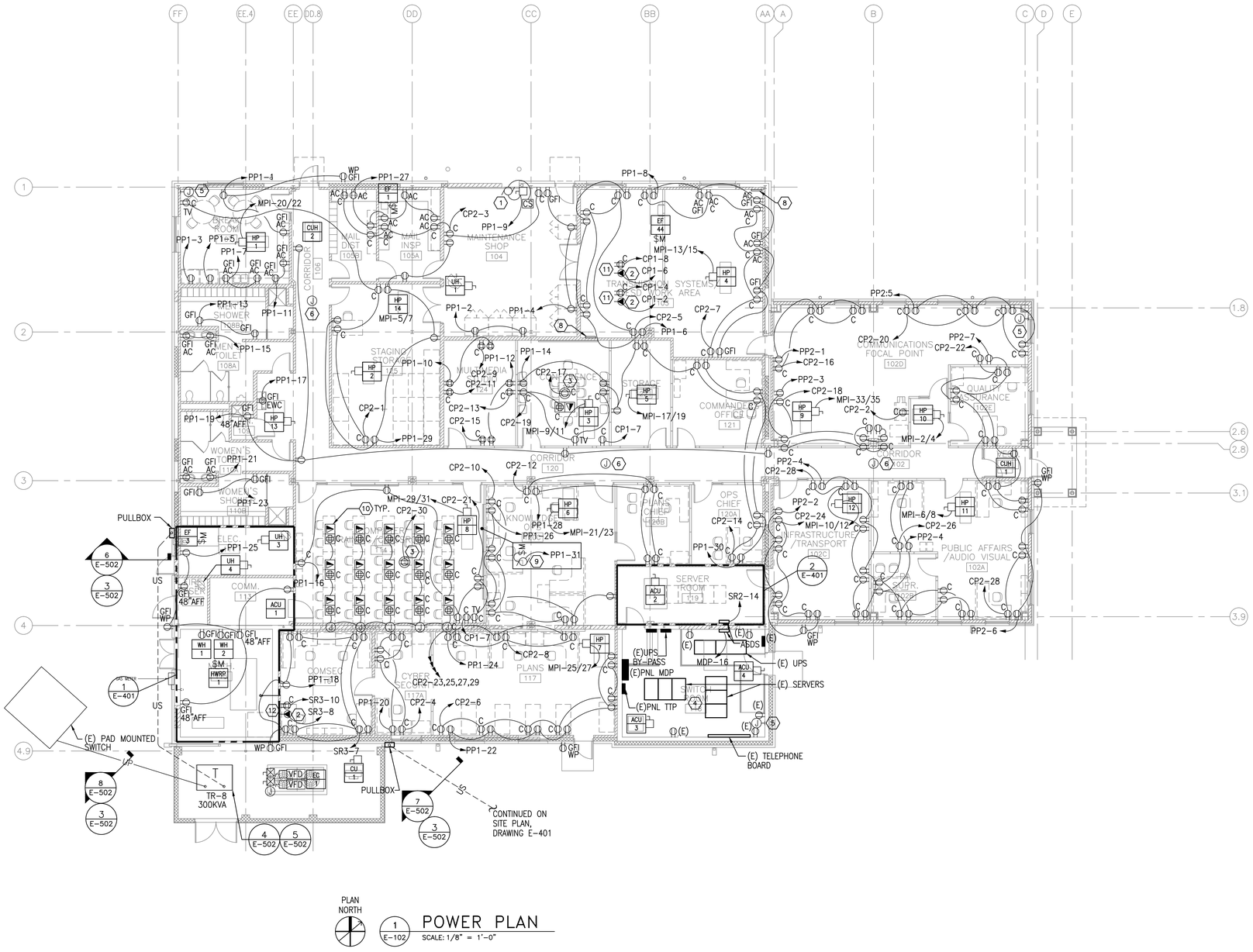

PLAN NORTH

1 E-102 POWER PLAN

SCALE: 1/8" = 1'-0"

GENERAL NOTES:

1. COORDINATE LOCATIONS OF RECEPTACLES WITH LOCATIONS OF TELE/DATA OUTLETS INDICATED ON TELECOMMUNICATION DRAWINGS. RECEPTACLES AND TELE/DATA OUTLETS SHOWN AT SAME LOCATION OR NEAR VICINITY TO EACH OTHER ON PLANS SHALL BE INSTALLED IMMEDIATELY NEXT TO EACH OTHER.
2. HOMERUN CIRCUITS INDICATED WITH "(PART)" AT END OF CIRCUIT INDICATES THAT CIRCUIT IS ALSO SHOWN IN OTHER LOCATIONS ON DRAWINGS FOR OTHER ADDITIONAL EQUIPMENT. OTHER LOCATIONS MAY BE ON OTHER DRAWINGS.
3. THE LOCATION OF ALL UNDERGROUND UTILITIES ARE APPROXIMATE. ALL UNDERGROUND UTILITIES SHALL BE FIELD VERIFIED AND MARKED PRIOR TO EXCAVATION, BORING, PROBING OR DRILLING.
4. REFERENCE EQUIPMENT SCHEDULE ON DRAWING E-603 FOR SPECIFICS AND CIRCUITING ON EQUIPMENT DESIGNATED [XX/Y].
5. COORDINATE LOCATIONS OF DISCONNECTS, STARTERS, AND MISC. EQUIPMENT INDICATED ON PLANS WITH ACTUAL EQUIPMENT. ELECTRICAL EQUIPMENT LOCATIONS SHOWN ARE DIAGRAMMATICAL. CONTRACTOR SHALL LOCATE AND MOUNT IN COMPLIANCE WITH NEC AND COORDINATE WITH EQUIPMENT SUCH THAT CONFLICTS DO NO EXIST.

KEYED NOTES (THIS SHEET ONLY):

1. FOR COILING DOOR, PROVIDE 30A/1P, NON-FUSED DISCONNECT AND 2#12, 1#12G, 3/4"C CIRCUIT. PROVIDE CONNECTIONS BETWEEN EQUIPMENT INCLUDING WALL MOUNTED CONTROL STATION.
2. L5-30R RECEPTACLE.
3. COORDINATE EXACT LOCATION OF CEILING MOUNTED RECEPTACLES WITH ACTUAL PROJECTOR LOCATION. LOCATION SHOWN ON PLAN IS DIAGRAMMATICAL.
4. THIS ROOM SHALL REMAIN IN OPERATION THROUGH OUT DEMOLITION AND REMODEL OF THIS FACILITY. CONTRACTOR SHALL COORDINATE TEMPORARY POWER REQUIREMENTS WITH CONTRACTING OFFICER.
5. PROVIDE 120 VAC CIRCUIT FOR PTZ CAMERA STEP-DOWN TRANSFORMER MOUNTED ABOVE CEILING. POWER FROM CIRCUIT CP1-1.
6. 120 VAC CIRCUIT FOR DDC CONTROLS. COORDINATE EXACT LOCATION WITH DDC SYSTEM CONTRACTOR. POWER FROM CIRCUIT CP1-3.
7. NOT USED.
8. PROVIDE ESD GROUND BAR AT LOCATION INDICATED. COORDINATE EXACT MOUNTING HEIGHT WITH COR. BOND TO NEAREST STRUCTURAL STEEL WITH #6 AWG BARE COPPER CONDUCTOR.
9. PROVIDE UP/DOWN SWITCH AND CIRCUITING FOR MOTORIZED SCREEN IN ROOM 114.
10. FOR FLOOR POWER AND TELE/DATA OUTLETS, PROVIDE CONNECTRAC U SERIES (NO SUBSTITUTIONS) CONSISTING OF SURFACE RACEWAY AND POWER/TELE/DATA/OUTLETS. PROVIDE BLACK POWDER-COATED RACEWAY CAPS. PROVIDE CONNECTRAC MODEL COVM-000-KIT DUPLEX POWER/DATA RECEPTACLE COVER WITH VOICE/DATA ADAPTER PLATE KIT. PROVIDE 8-WIRE/4-CIRCUIT POWER ENTRY CABLES AND QUICK-CONNECT JUMPER CABLES AS REQUIRED. COORDINATE INSTALLATION WITH WALL STUD PLACEMENT.
11. RECEPTACLES FOR EDIT STUDIO RACK EQUIPMENT. COORDINATE EXACT MOUNTING LOCATION WITH COR.
12. RECEPTACLES FOR COMSEC RACK EQUIPMENT. COORDINATE EXACT MOUNTING LOCATION WITH COR.

2438 1219 0 2438 4877mm
(8') (4') (8') (16')
1/8" = 1'-0"

leidos
LEIDOS
622 EMERSON ROAD, SUITE 600
St. Louis, MO. 63141
314-821-7017
www.leidos.com

MARK	REVISION	DATE
1	AS-BUILT RECORD DRAWINGS	05-12-14
0	TYPE B-3 FINAL SUBMITTAL	02-11-11

COORDINATION SIGNATURES

		DATE
USER		
BCE		
FIRE		
ENVIRO		
SAFETY		
SECURITY		
COMM		

ILLINOIS
AIR NATIONAL GUARD
ABRAHAM LINCOLN CAPITOL AIRPORT - SPRINGFIELD, IL

PROJECT TITLE: NWOFYQ-09-D-0006 9E01 ADAL COMMUNICATIONS FACILITY, BLDG F-8
SUBMITTAL LEVEL: AS-BUILT RECORD DRAWINGS
SHEET TITLE: POWER PLAN

DRAWN BY:	APPROVED BY:
AMF	TNK
BASE ENGINEER: LT. COL. CODERKO	
DATE: 12 MAY 2014	PROJECT NO. (TWUR NO.) DCFT052022

E-102

PLOT DATE: 5/12/2014 11:35:31 AM
FILE LOCATION: C:\6150930305 ADAL COMM P8\CAD\E\930305E-102.DWG
LAST SAVED BY: LADDA

GENERAL NOTES:

1. THE LIGHTNING PROTECTION SYSTEM SHALL COMPLY WITH NFPA 780 AND UL 96A.
2. LIGHTNING PROTECTION SYSTEM DEVICES, CABLES AND DETAILS SHOWN INDICATE MINIMUM REQUIREMENTS AND ARE FOR REFERENCE ONLY. LIGHTNING PROTECTION SYSTEM INSTALLER SHALL PROVIDE INSTALLATION DRAWINGS THAT ARE STAMPED. APPROVED AND LISTED WITH A "MASTER LABEL CERTIFICATION".
3. DOWN CONDUCTORS SHALL BE CLASS 1, (PRIMARY).
4. ROOF CONDUCTORS AND BONDING CONDUCTORS SHALL BE CLASS 2, (SECONDARY).
5. REFER TO SHEET E-503 FOR TYPICAL LIGHTNING PROTECTION DETAILS.
6. INSTALLATION OF LIGHTNING PROTECTION DEVICES, ACCESSORIES AND CABLES SHALL NOT VOID THE ROOF WARRANTY.
7. ALL ROOF PENETRATIONS SHALL BE WATERPROOF.
8. ADHESIVE USED FOR LIGHTNING PROTECTION SYSTEM SHALL BE PROVIDED BY THE ROOFING CONTRACTOR, OR PROVIDE CERTIFICATION THAT ROOF ADHESIVE IS APPROVED BY THE MANUFACTURER(S) OF THE ROOFING MATERIAL(S).
9. BOND EXISTING PLUMBING ROOF PENETRATIONS TO OVERALL LIGHTNING PROTECTION SYSTEM.

KEYED NOTES (THIS SHEET ONLY):

1. REMOVE AND REPLACE EXISTING LIGHTNING PROTECTION SYSTEM OVER EXISTING SERVER ROOM.
2. BOND NEW GROUND LOOP TO EXISTING SWITCH ROOM GROUNDING GRID. BOND MAY OCCUR UNDERGROUND OR ABOVE GROUND IN EXISTING SWITCH ROOM. REFERENCE DRAWING E-401 ELECTRICAL SITE PLAN FOR APPROXIMATE LOCATION OF EXISTING SWITCHROOM GROUNDING GRID.
3. REPAIR EXISTING SWITCH ROOM GROUNDING SYSTEM IF DAMAGED DURING CONSTRUCTION. REFERENCE DRAWING E-401 ELECTRICAL SITE PLAN FOR APPROXIMATE LOCATION OF EXISTING SWITCHROOM GROUNDING GRID.
4. EXTEND #4/0 AWG BARE COPPER CONDUCTOR TO ENGINE GENERATOR GROUND LOOP. ROUTE CONDUCTOR WITH DUCT BANK TO GENERATOR.
5. CONNECT MECHANICAL EQUIPMENT ROOF PENETRATIONS TO OVERALL LIGHTNING PROTECTION SYSTEM.
6. CONNECT SECURITY FENCING TO OVERALL LIGHTNING PROTECTION SYSTEM.

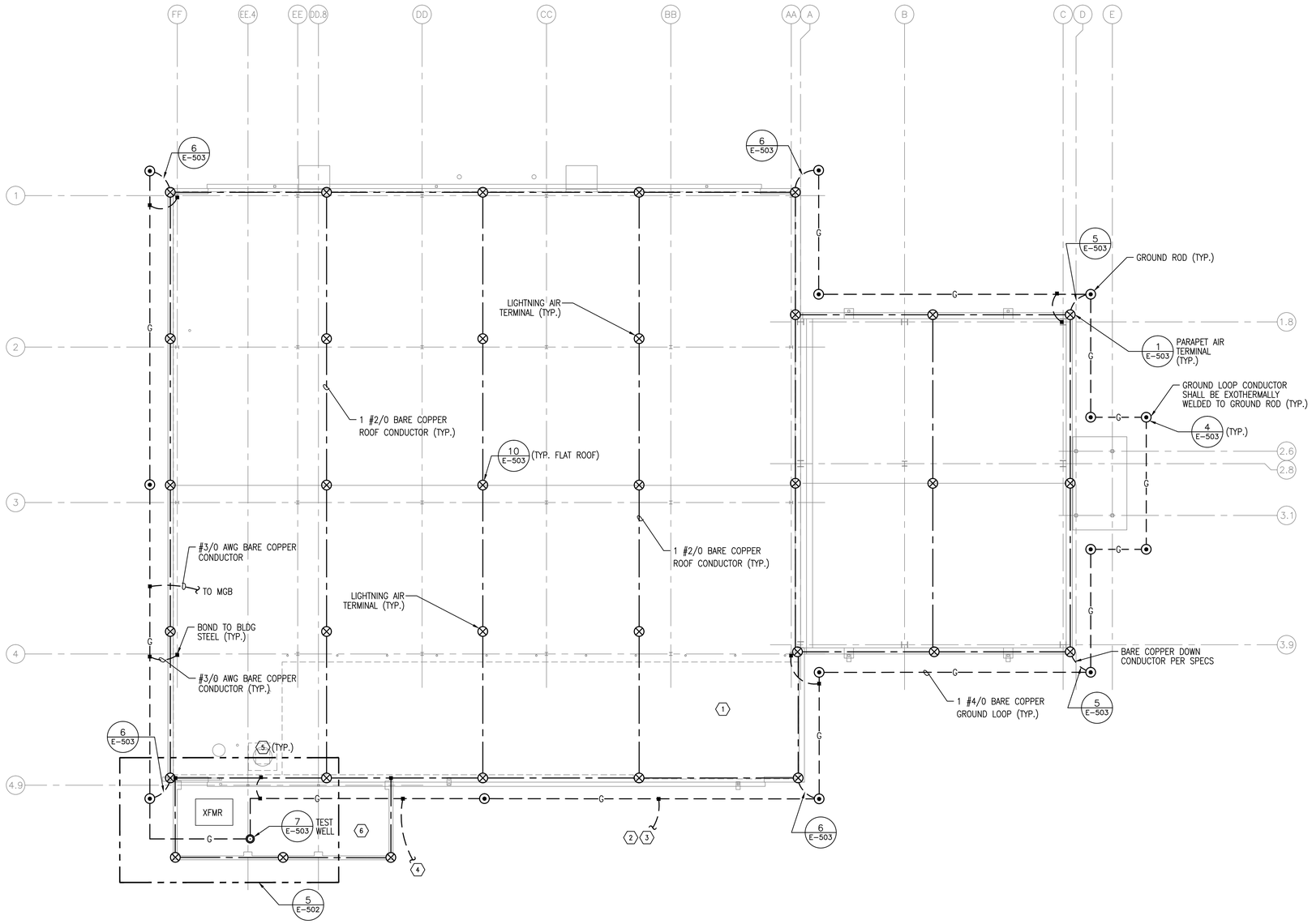

PLAN NORTH

1 E-103 LIGHTNING PROTECTION PLAN

SCALE: 1/8" = 1'-0"

2438 (8') 1219 (4') 0 2438 (8') 4877mm (16')
1/8" = 1'-0"

leidos
LEIDOS
622 EMERSON ROAD, SUITE 600
St. Louis, MO. 63141
314-821-7017
www.leidos.com

MARK	REVISION	DATE
1	AS-BUILT RECORD DRAWINGS	05-12-14
0	TYPE B-3 FINAL SUBMITTAL	02-11-11

COORDINATION SIGNATURES

	DATE
USER	
BCE	
FIRE	
ENVIRO	
SAFETY	
SECURITY	
COMM	

ILLINOIS
AIR NATIONAL GUARD
ABRAHAM LINCOLN CAPITOL AIRPORT - SPRINGFIELD, IL

PROJECT TITLE: W9QFYG-09-D-0006 9501 ADAL COMMUNICATIONS FACILITY, BLDG P-8
SUBMITTAL LEVEL: AS-BUILT RECORD DRAWINGS
SHEET TITLE: LIGHTNING PROTECTION PLAN

DRAWN BY:	APPROVED BY:
AMF	TNK
BASE ENGINEER: LT. COL. CODERKO	
DATE: 12 MAY 2014	PROJECT NO. (TWLR NO.): DCFT052022

E-103

PLOT DATE: 5/12/2014 11:35:34 AM
FILE LOCATION: C:\6150930305 ADAL COMM P8\CAD\E\930305E-103.DWG
LAST SAVED BY: FINLEYAM

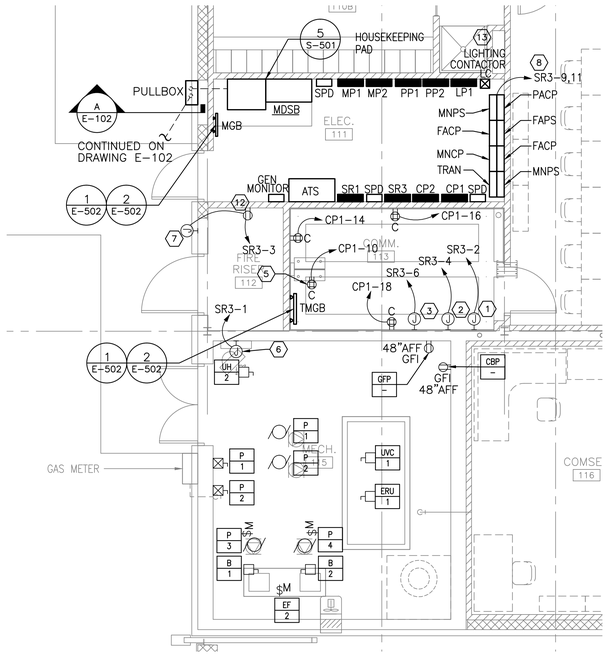

PLAN NORTH

1 E-401 ROOMS 111, 113, 115

SCALE: 1/4" = 1'-0"

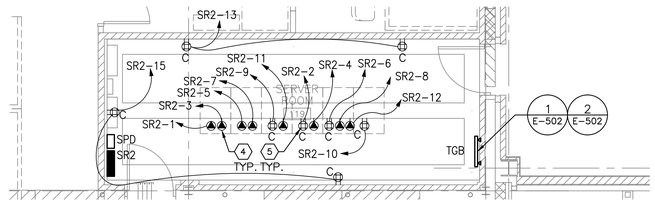

PLAN NORTH

2 E-401 SERVER ROOM 119

SCALE: 1/4" = 1'-0"

GENERAL NOTES:

1. COORDINATE LOCATIONS OF RECEPTACLES WITH LOCATIONS OF TELE/DATA OUTLETS INDICATED ON TELECOMMUNICATION DRAWINGS. RECEPTACLES AND TELE/DATA OUTLETS SHOWN AT SAME LOCATION OR NEAR VICINITY TO EACH OTHER ON PLANS SHALL BE INSTALLED IMMEDIATELY NEXT TO EACH OTHER.
2. HOMERUN CIRCUITS INDICATED WITH "(PART)" AT END OF CIRCUIT INDICATES THAT CIRCUIT IS ALSO SHOWN IN OTHER LOCATIONS ON DRAWINGS FOR OTHER ADDITIONAL EQUIPMENT. OTHER LOCATIONS MAY BE ON OTHER DRAWINGS.
3. COORDINATE LOCATION OF ELECTRICAL EQUIPMENT (PANELS, DISCONNECT SWITCHES, ETC.) SUCH THAT NO WATER PIPING IS ROUTED OVER TOP OR WITHIN 3' LATERALLY, PER ANG ETL 01-1-1, SECTION 16.1.11.
4. REFERENCE EQUIPMENT SCHEDULE ON DRAWING E-603 FOR SPECIFICS AND CIRCUITING ON EQUIPMENT DESIGNATED XX/Y .
5. COORDINATE LOCATIONS OF DISCONNECTS, STARTERS, AND MISC. EQUIPMENT INDICATED ON PLANS WITH ACTUAL EQUIPMENT. ELECTRICAL EQUIPMENT LOCATIONS SHOWN ARE DIAGRAMMATICAL. CONTRACTOR SHALL LOCATE AND MOUNT IN COMPLIANCE WITH NEC AND COORDINATE WITH EQUIPMENT SUCH THAT CONFLICTS DO NO EXIST.

KEYED NOTES (THIS SHEET ONLY):

1. FOR ACCESS CONTROL POWER SUPPLIES, PROVIDE POWER CIRCUIT INDICATED.
2. FOR IDS AND ACCESS CONTROL EQUIPMENT, PROVIDE POWER CIRCUIT INDICATED.
3. FOR IDS, CCTV AND ACCESS CONTROL EQUIPMENT, PROVIDE POWER CIRCUIT INDICATED.
4. PROVIDE L5-30R RECEPTACLE MOUNTED ON WIREWAY ABOVE, 2 #10, #10G (CU) CIRCUIT.
5. MOUNT RECEPTACLE ON WIREWAY ABOVE.
6. CIRCUIT FOR DDC CONTROL PANEL. CONFIRM EXACT LOCATION WHERE CIRCUIT IS REQUIRED WITH DDC SYSTEM CONTRACTOR.
7. PROVIDE 120V CIRCUIT FOR FIRE SUPPRESSION SYSTEM ELECTRIC BELL.
8. PROVIDE (2) CIRCUITS FOR FIRE ALARM SYSTEM PANELS. FOR EACH PANEL, DIVIDE PANEL LOADS EVENLY BETWEEN CIRCUITS.
9. RECEPTACLE FOR PORTABLE SATELLITE DISH. COORDINATE EXACT LOCATION WITH COR. PROVIDE A FIELD FABRICATED MOUNTING STRUCTURE.
10. FOR JISCC TRAILER, PROVIDE 15-30R RECEPTACLE AND 3#10, 1#10G, 3/4"C CIRCUIT. PROVIDE A FIELD FABRICATED MOUNTING SYSTEM
11. PROVIDE ALL CONNECTIONS, CABLE, CONDUIT AND BOXES AS NECESSARY FOR A COMPLETE AND OPERATIONAL SYSTEM. COORDINATE FINAL GENERATOR DIMENSIONS WITH EQUIPMENT PAD DIMENSIONS AND BOLLARD LOCATION PRIOR TO CONSTRUCTION.
12. PROVIDE DEDICATED CIRCUIT FOR FIRE PROTECTION AIR COMPRESSOR.
13. REFER TO DETAIL 3, E-501 FOR LIGHTING CONTACTOR SCHEMATIC.

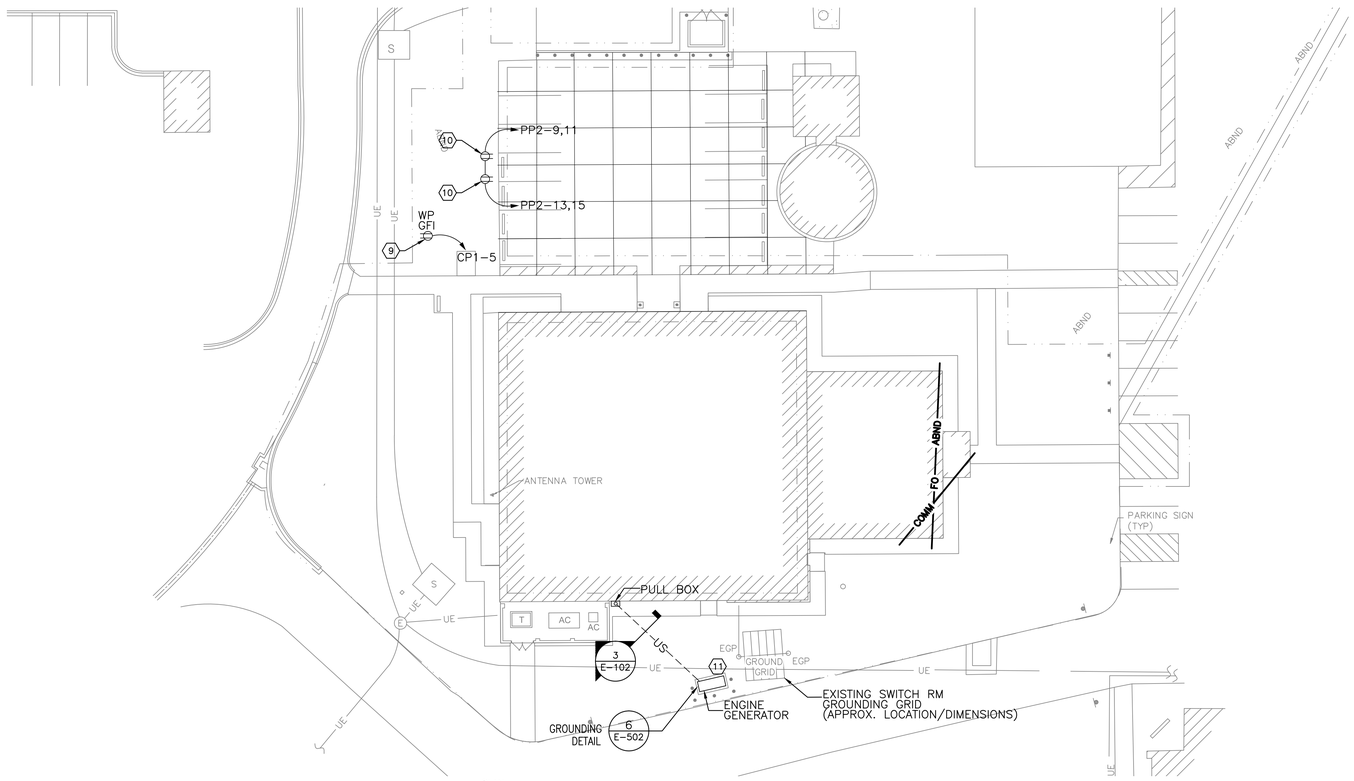

PLAN NORTH

3 E-401 ELECTRICAL SITE PLAN

SCALE: 1" = 20'-0"

1829 (6') 914 (3') 0 1829mm (6')

1/4" = 1'-0"

20' 0 10' 20'

SCALE: 1"=20'

leidos
LEIDOS
622 EMERSON ROAD, SUITE 600
St. Louis, MO, 63141
314-821-7017
www.leidos.com

MARK	REVISION	DATE
1	AS-BUILT RECORD DRAWINGS	05-12-14
0	TYPE B-3 FINAL SUBMITTAL	02-11-11

COORDINATION SIGNATURES

		DATE
USER		
BCE		
FIRE		
ENVIRO		
SAFETY		
SECURITY		
COMM		

ILLINOIS
AIR NATIONAL GUARD
ABRAHAM LINCOLN CAPITOL AIRPORT - SPRINGFIELD, IL

PROJECT TITLE: W90FYG-09-D-0006 9E01 ADAL COMMUNICATIONS FACILITY, BLDG P-8

SUBMITTAL LEVEL: AS-BUILT RECORD DRAWINGS

SHEET TITLE: ENLARGED PLANS

DRAWN BY:	APPROVED BY:
AMF	TNK
BASE ENGINEER: LT. COL. CODERKO	
DATE: 12 MAY 2014	PROJECT NO. (TWUR NO.): DCFT052022

E-401

PLOT DATE: 5/12/2014 11:35:39 AM
FILE LOCATION: C:\615093030 5 ADAL COMM P8\CAD\E\930305E-401.DWG
LAST SAVED BY: LADDA

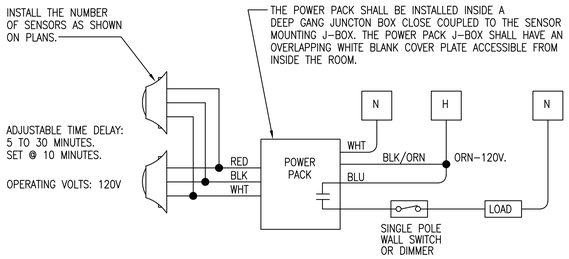

WIRING DIAGRAM
CEILING-MOUNTED OCCUPANCY SENSOR

1 / E-501

SCALE: NONE

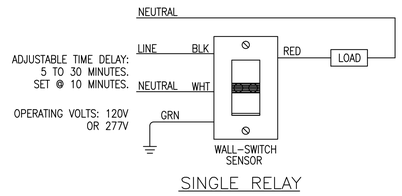

SINGLE RELAY

WIRING DIAGRAM
WALL-MOUNTED OCCUPANCY SENSORS

2 / E-501

SCALE: NONE

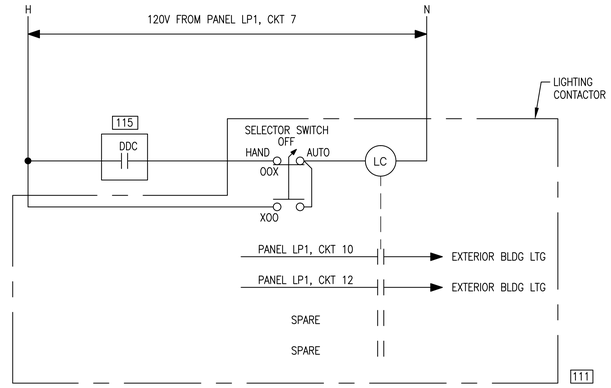

CONTROL SCHEMATIC – LIGHTING CONTACTOR (LC1)

3 / E-501

SCALE: NONE

CABLE FILL CAPACITIES:

CAT 6 .30" DIA. .07065 IN^2 = 18* CABLES.
* ACTUAL NUMBER OF CABLES TO BE ACCOMMODATED SHOULD BE DETERMINED BY THE COMMUNICATIONS CABLING PROVIDER BASED ON ACTUAL CABLE SIZES AND CONDITIONS.

GENERAL NOTES:

1. VOICE/DATA CABLING CAN BE PLACED ALONGSIDE POWER IN THE RACEWAY CHANNEL.
2. SHIELDING FOR THE DATA CABLES IS PROVIDED BY THE SPECIAL STEEL FLEX CONDUIT.
3. LOW PROFILE RACEWAY INSIDE DIMENSIONS: 3.17" WIDE X .655" HIGH (2.076 IN^2).
4. RACEWAY DIMENSIONS LESS POWER CONDUIT: 2.22" WIDE X .655" HIGH (1.4541 IN^2).
5. INSTALL PER SELECTED MANUFACTURERS INSTRUCTIONS.

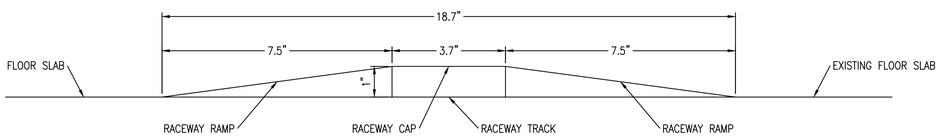

LOW PROFILE SURFACE MOUNTED RACEWAY CROSS SECTION

4 / E-502

SCALE: NOT TO SCALE

PLOT DATE: 5/12/2014 11:35:41 AM
FILE LOCATION: C:\6150930305 ADAL COMM P8\CAD\E\930305E-501.DWG
LAST SAVED BY: PRUITTAR

leidos
LEIDOS
622 EMERSON ROAD, SUITE 600
St. Louis, MO. 63141
314-821-7017
www.leidos.com

MARK	REVISION	DATE
1	AS-BUILT RECORD DRAWINGS	05-12-14
0	TYPE B-3 FINAL SUBMITTAL	02-11-11

COORDINATION SIGNATURES

	DATE
USER	
BCE	
FIRE	
ENVIRO	
SAFETY	
SECURITY	
COMM	

ILLINOIS
AIR NATIONAL GUARD
ABRAHAM LINCOLN CAPITOL AIRPORT - SPRINGFIELD, IL

PROJECT TITLE: W90FYG-09-D-0006 9E01 ADAL COMMUNICATIONS FACILITY, BLDG P-8
SUBMITTAL LEVEL: AS-BUILT RECORD DRAWINGS
SHEET TITLE: ELECTRICAL DETAILS

DRAWN BY: AMF
APPROVED BY: TNK
BASE ENGINEER: LT. COL. CODERKO
DATE: 12 MAY 2014
PROJECT NO. (TWUR NO.): DCFT052022

E-501

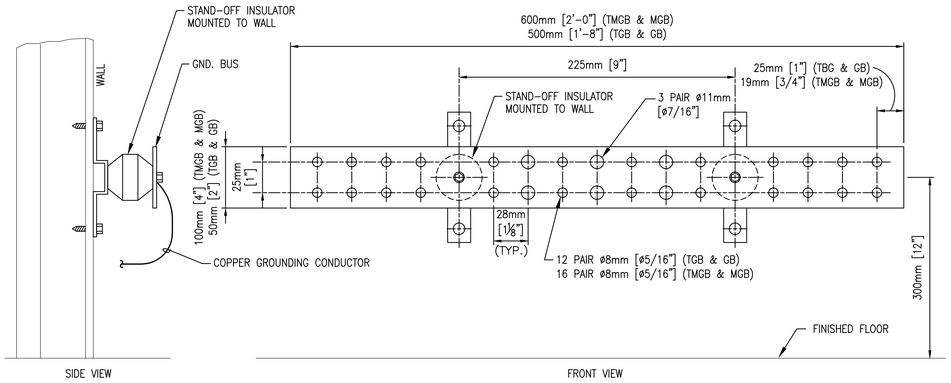

NOTE:
1. REFER TO DETAIL 2, THIS SHEET FOR DISTRIBUTION SYSTEM GROUNDING DETAIL.

1 / E-502 GROUNDING BUSBAR DETAIL @ MGB (TMGB, TGB & GB SIMILAR)

SCALE: NONE

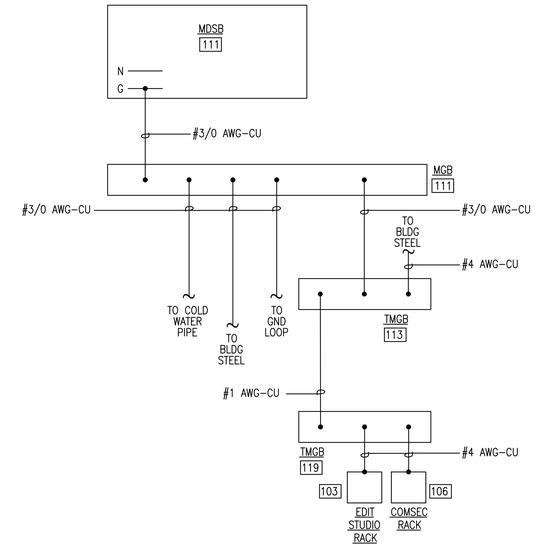

2 / E-502 DISTRIBUTION SYSTEM GROUNDING DETAIL

SCALE: NONE

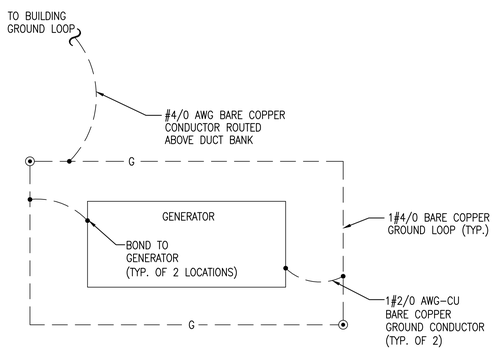

3 / E-502 GENERATOR GROUNDING DETAIL

SCALE: NONE

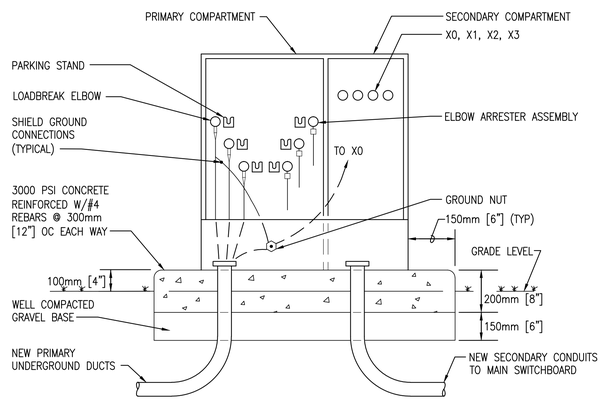

NOTES:
1) PROVIDE NEW PAD AS NECESSARY TO ACCOMMODATE NEW TRANSFORMER.
2) EXACT SIZE OF PAD AND CONDUIT OPENING TO BE COORDINATED WITH THE CERTIFIED TRANSFORMER DRAWINGS.
3) ANCHOR TRANSFORMER PER MANUFACTURER'S INSTRUCTIONS.
4) SEAL VOIDS AROUND CABLES WITH WATER AND OIL RESISTANT CAULKING OR SEALANT. CAP ALL SPARE CONDUITS.

4 / E-502 TRANSFORMER PAD DETAIL

SCALE: NONE

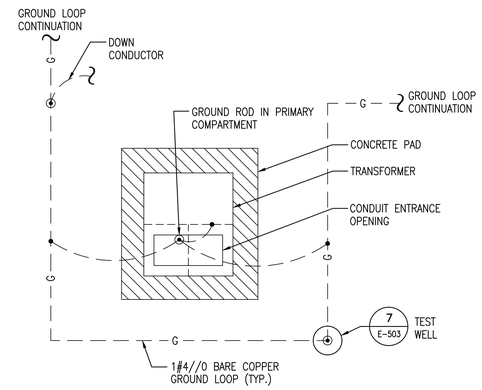

NOTES:
1) PROVIDE A 4/0 BARE COPPER LOOP PLACED A MINIMUM OF 600mm [2'-0"] AWAY FROM PAD AND BURIED A MINIMUM OF 760mm [30"] DEEP.
2) MAKE ALL CONNECTIONS USING EXOTHERMIC WELDS.

5 / E-502 TRANSFORMER GROUNDING DETAIL (15KV)

SCALE: NONE

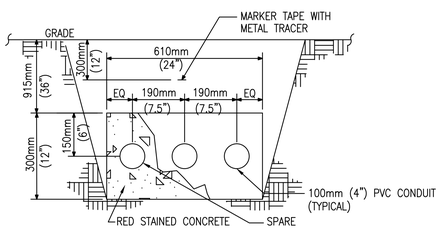

6 / E-502 DUCT BANK DETAIL

SCALE: N/A

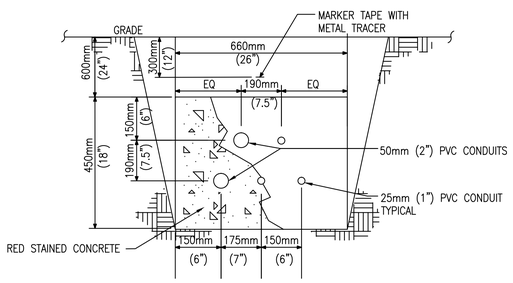

7 / E-502 DUCT BANK DETAIL

SCALE: N/A

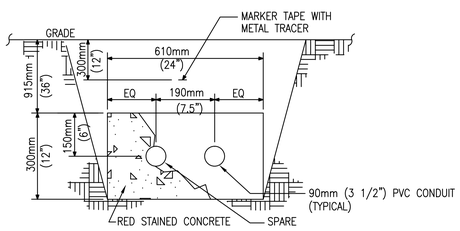

8 / E-502 DUCT BANK DETAIL

SCALE: NONE

PLOT DATE: 5/12/2014 11:35:44 AM
FILE LOCATION: C:\6150930305 ADAL COMM PB\CAD\E\930305E-502.DWG
LAST SAVED BY: FINLEYAM

leidos
LEIDOS
622 EMERSON ROAD, SUITE 600
St. Louis, MO. 63141
314-821-7017
www.leidos.com

MARK	REVISION	DATE
1	AS-BUILT RECORD DRAWINGS	05-12-14
0	TYPE B-3 FINAL SUBMITTAL	02-11-11

COORDINATION SIGNATURES

	DATE
USER	
BCE	
FIRE	
ENVIRO	
SAFETY	
SECURITY	
COMM	

ILLINOIS AIR NATIONAL GUARD
ABRAHAM LINCOLN CAPITOL AIRPORT - SPRINGFIELD, IL

PROJECT TITLE: W90FYQ-09-D-0006 9E01 ADAL COMMUNICATIONS FACILITY, BLDG P-8
SUBMITTAL LEVEL: AS-BUILT RECORD DRAWINGS
SHEET TITLE: ELECTRICAL DETAILS

DRAWN BY: AMF
APPROVED BY: TNK
BASE ENGINEER: LT. COL. CODERKO
DATE: 12 MAY 2014
PROJECT NO. (TWLR NO.): DCFT052022

E-502

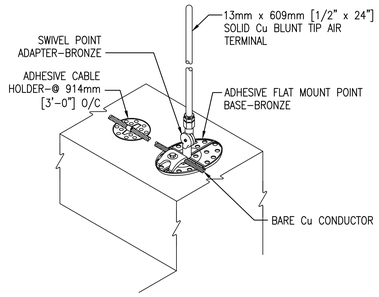

1 / E-503 PARAPET AIR TERMINAL CONNECTION

SCALE: NONE

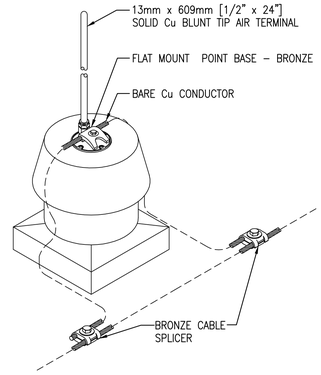

2 / E-503 EQUIPMENT AIR TERMINAL CONNECTION

SCALE: NONE

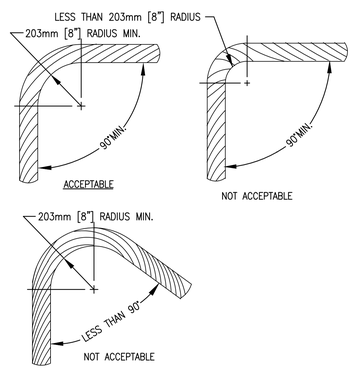

3 / E-503 TYPICAL CABLE BEND REQUIREMENTS

SCALE: NONE

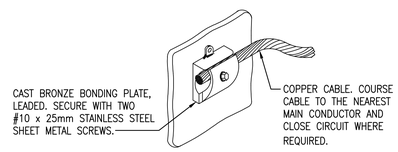

TYPICAL EQUIPMENT BOND
NOT TO SCALE

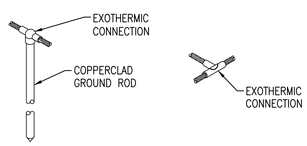

4 / E-503 TYPICAL EXOTHERMIC WELD CONNECTIONS

SCALE: NONE

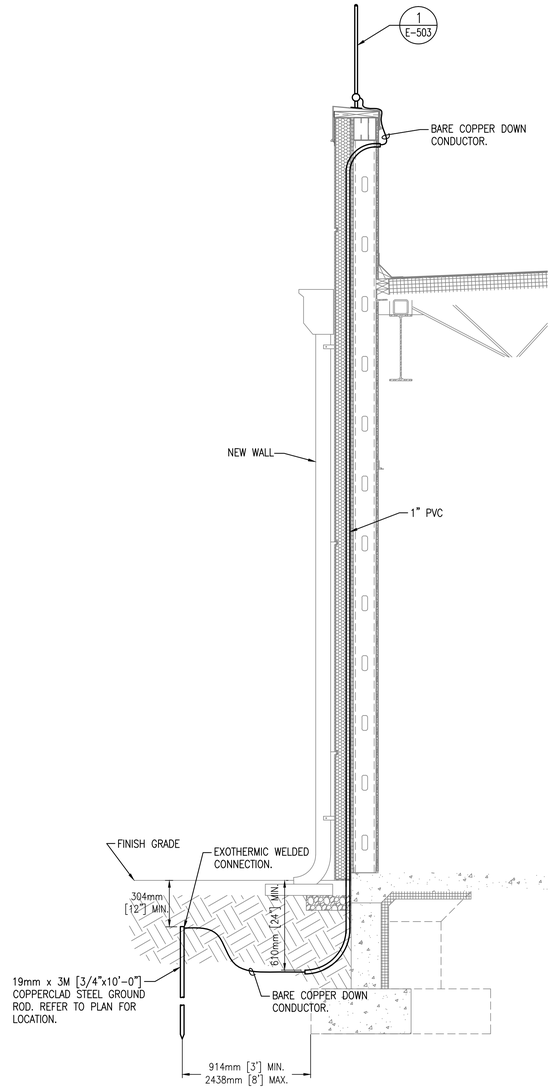

5 / E-503 DOWN CONDUCTOR ROUTING – NEW WALL

SCALE: NONE

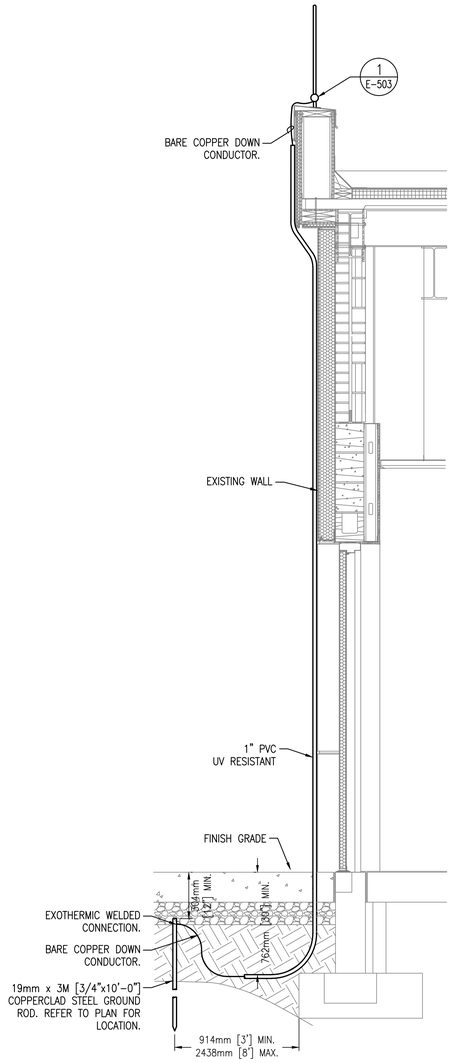

6 / E-503 DOWN CONDUCTOR ROUTING – EXISTING WALL

SCALE: NONE

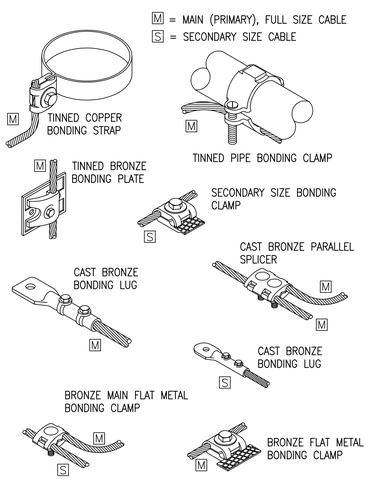

7 / E-503 TYPICAL BONDING AND SPLICING DETAILS

SCALE: NONE

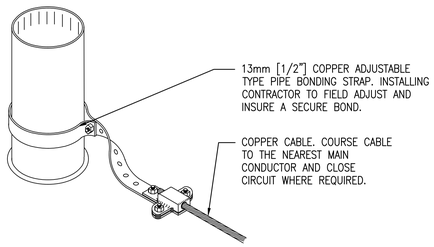

8 / E-503 TYPICAL VENT THRU–ROOF BOND

SCALE: NONE

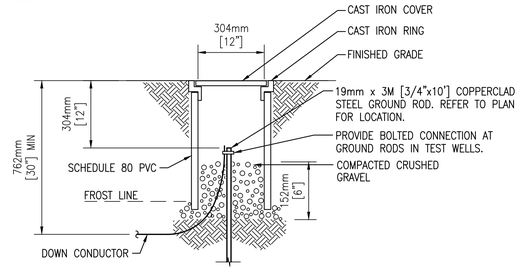

9 / E-503 INSPECTION TEST WELL DETAIL

SCALE: NONE

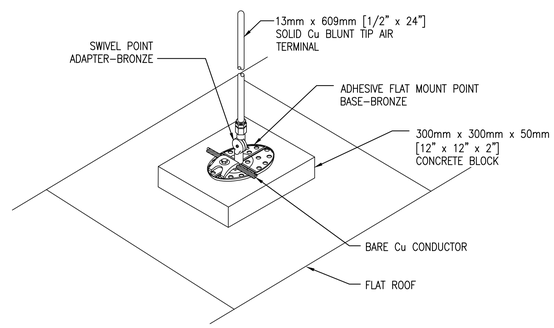

10 / E-503 FLAT ROOF AIR TERMINAL CONNECTION

SCALE: NONE

GENERAL NOTES:

1. LOCATE AIR TERMINALS AS SHOWN. TAKE CARE TO INSURE THAT ALL POINTS ARE WITHIN 609MM [2'–0"] OF OUTSIDE BUILDING EDGE, OUTSIDE CORNERS, AND RIDGE ENDS, AND THAT MAXIMUM SPACING DOES NOT EXCEED 7.5M [25'–0"], AND THAT MINIMUM PROJECTION ABOVE OBJECT PROTECTED IS 250MM [10"].
2. MAINTAIN HORIZONTAL OR DOWNWARD COURSING OF MAIN CONDUCTOR AND INSURE THAT ALL BENDS HAVE AT LEAST AN 203MM [8"] RADIUS AND DO NOT EXCEED 90°.
3. ATTACH ALL EXPOSED ROOF, DOWN LEAD AND BONDING CABLES AT 914MM [3'–0"] ON CENTER MAXIMUM. VERIFY COMPATIBILITY OF ADHESIVE ON ROOF MATERIALS PRIOR TO INSTALLATION.
4. BOND TO WATER SERVICE AND OTHER PIPING SYSTEMS AS SHOWN AND AS REQUIRED BY CODES.
5. INTERCONNECT LIGHTNING PROTECTION GROUND TO ELECTRIC, TELEPHONE, AND OTHER BUILDING GROUND SYSTEMS AS SHOWN OR AS REQUIRED BY CODE.
6. SYSTEM SHALL BE INSTALLED TO INSURE PROPER CODE COMPLIANCE AND SYSTEM CERTIFICATION. SYSTEM SHOWN SHALL BE CONSIDERED AS THE MINIMUM REQUIREMENTS.
7. "RECORD DRAWINGS" SHALL BE SUBMITTED IN ACCORDANCE WITH CERTIFICATION PROCEDURES.
8. ALL MATERIAL TO BE UNDERWRITER'S LABORATORIES APPROVED WITH LABELS ON CONDUCTORS @ 3M [10'–0"] INTERVALS AND LABELS ON ALL AIR TERMINALS.
9. COMPLETED INSTALLATION AS SUBMITTED SHALL BEAR U.L. MASTER LABEL, TO BE SECURED BY SYSTEM INSTALLER PER UL96A AND IN ACCORDANCE WITH NFPA 780.
10. INSTALLATION SHALL COMPLY IN ALL RESPECTS TO L.P.I. CODE 175. INSTALLATION SHALL BE MADE BY OR UNDER THE SUPERVISION OF AN L.P.I. CERTIFIED MASTER INSTALLER. COMPLETED INSTALLATION TO RECEIVE SYSTEM CERTIFICATION INCLUDING SUBMITTAL OF FORM L.P.I.–1–R91.

leidos
LEIDOS
622 EMERSON ROAD, SUITE 600
St. Louis, MO. 63141
314–821–7017
www.leidos.com

MARK	REVISION	DATE
1	AS-BUILT RECORD DRAWINGS	05-12-14
0	TYPE B-3 FINAL SUBMITTAL	02-11-11

COORDINATION SIGNATURES

		DATE
USER		
BCE		
FIRE		
ENVIRO		
SAFETY		
SECURITY		
COMM		

ILLINOIS
AIR NATIONAL GUARD
ABRAHAM LINCOLN CAPITOL AIRPORT - SPRINGFIELD, IL

PROJECT TITLE: W90QFQ-09-D0006 (W01) ADAL COMMUNICATIONS FACILITY, BLDG P-8
SUBMITTAL EXPD: AS-BUILT RECORD DRAWINGS
SHEET TITLE: ELECTRICAL DETAILS

DRAWN BY:	APPROVED BY:
AMF	TNK
BASE ENGINEER: LT. COL. CODERKO	
DATE: 12 MAY 2014	PROJECT NO. (TWR NO.) DCFT052022

E–503

PLOT DATE: 5/12/2014 11:35:47 AM
FILE LOCATION: C:\61509305 ADAL COMM P8\CAD\E\930305E–503.DWG
LAST SAVED BY: FINLEYAM

GENERAL NOTES:

1. XXX INDICATES ROOM NUMBER WHERE EQUIPMENT IS LOCATED.

KEYED NOTES (THIS SHEET ONLY):

1. MULTI-FUNCTION, DIGITAL REVENUE METER (POWERLOGIC ION 7350) CONNECTED TO DDC SYSTEM. COORDINATE METERING REQUIREMENTS WITH CONTRACTING OFFICER IN ACCORDANCE WITH BASE STANDARD.

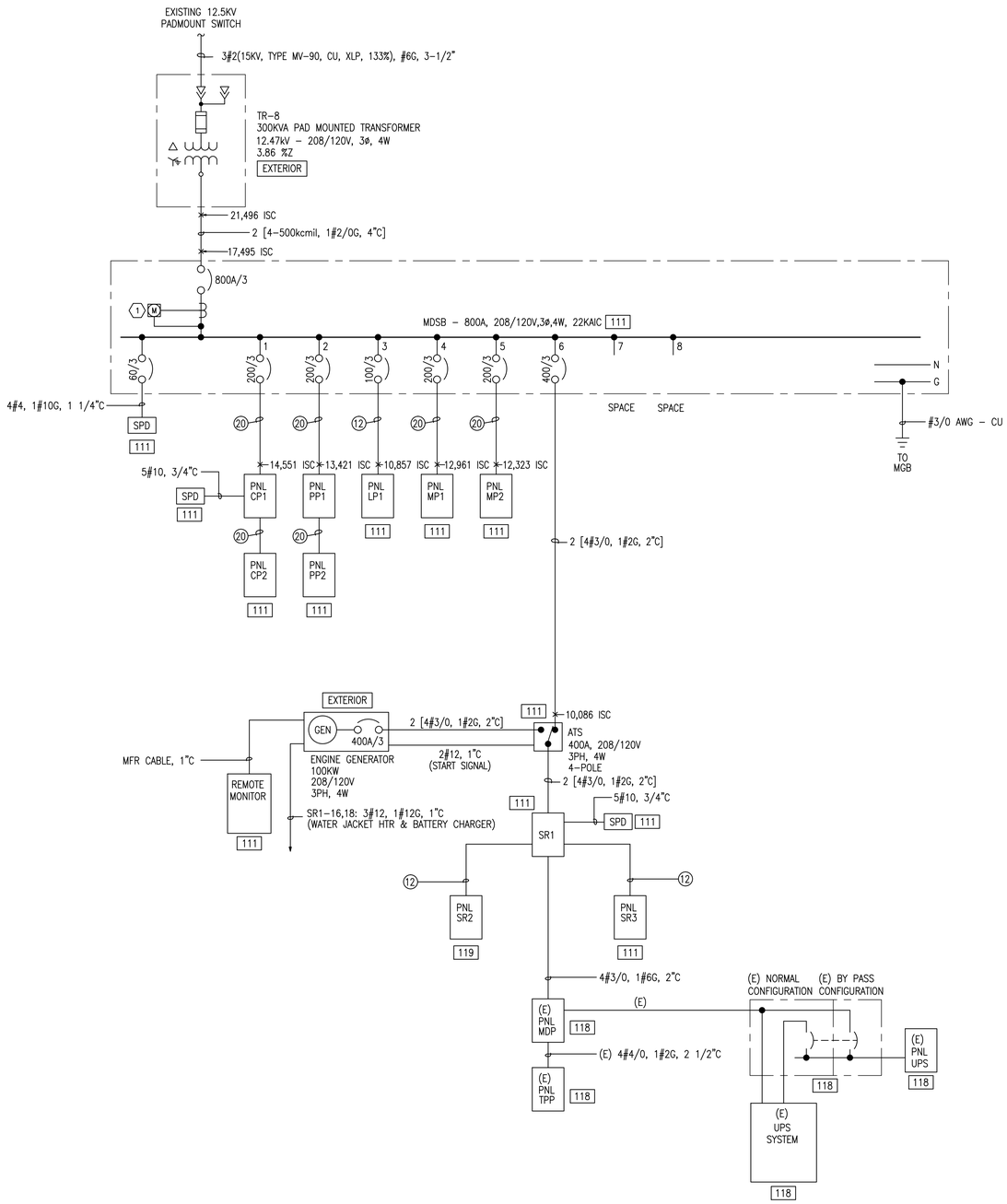

1 E-601 ONE-LINE DIAGRAM

SCALE: NONE

FEEDER SCHEDULE		
FEEDER #	FEEDER SIZE	AMPS
1	3#12, 1#12G, 3/4"C	20A
2	4#12, 1#12G, 3/4"C	20A
3	3#10, 1#10G, 3/4"C	30A
4	4#10, 1#10G, 3/4"C	30A
5	3#8, 1#10G, 3/4"C	40A
6	4#8, 1#10G, 3/4"C	40A
7	3#6, 1#10G, 1"C	50A
8	4#6, 1#10G, 1"C	50A
9	3#4 1#8G, 1-1/4"C	70A
10	4#4 1#8G, 1-1/4"C	70A
11	3#2, 1#8G, 1-1/4"C	100A
12	4#2, 1#8G, 1-1/4"C	100A
13	3#1, 1#6G, 2"C	125A
14	4#1, 1#6G, 2"C	125A
15	3#1/0, 1#6G, 2"C	150A
16	4#1/0, 1#6G, 2"C	150A
17	3#2/0, 1#6G, 2"C	175A
18	4#2/0, 1#6G, 2"C	175A
19	3#3/0, 1#6G, 2"C	200A
20	4#3/0, 1#6G, 2"C	200A
21	3#4/0, 1#4G, 2-1/2"C	225A
22	4#4/0, 1#4G, 2-1/2"C	225A
23	3#250kcmil, 1#4G, 2-1/2"C	250A
24	4#250kcmil, 1#4G, 2-1/2"C	250A
25	3#350kcmil, 1#4G, 3"C	300A
26	4#350kcmil, 1#4G, 3"C	300A
27	3#500kcmil, 1#2G, 4"C	400A
28	4#500kcmil, 1#2G, 4"C	400A
29	(2 SETS) 3#350kcmil, 1#1 G, 3"C	600A
30	(2 SETS) 4#350kcmil, 3"C	600A
31	2#12, 1#12G, 3/4"C	20A
32	2#4, 1#8G, 1"C	70A

NOTE: NOT ALL FEEDER #'S ARE USED.

leidos
LEIDOS
622 EMERSON ROAD, SUITE 600
St. Louis, MO. 63141
314-821-7017
www.leidos.com

MARK	REVISION	DATE
1	AS-BUILT RECORD DRAWINGS	05-12-14
0	TYPE B-3 FINAL SUBMITTAL	02-11-11

COORDINATION SIGNATURES

	DATE
USER	
BCE	
FIRE	
ENVIRO	
SAFETY	
SECURITY	
COMM	

ILLINOIS
AIR NATIONAL GUARD
ABRAHAM LINCOLN CAPITOL AIRPORT - SPRINGFIELD, IL

PROJECT TITLE: W90DFYQ-09-D-0006 9(E)1 ADAL COMMUNICATIONS FACILITY, BLDG P-8
SUBMITTAL LEVEL: AS-BUILT RECORD DRAWINGS
SHEET TITLE: ONE-LINE DIAGRAM

DRAWN BY:	APPROVED BY:
AMF	TNK
BASE ENGINEER: LT. COL. CODERKO	
DATE: 12 MAY 2014	PROJECT NO. (TWLR NO.) DCFT052022

E-601

PLOT DATE: 5/12/2014 11:35:50 AM
FILE LOCATION: C:\61509305 ADAL COMM P8\CAD\E\930305E-601.DWG
LAST SAVED BY: FINLEYAM

FEED FROM: (E) ATS
VOLTAGE: 208/120
AIC: 10000
ENCLOSURE: NEMA1

PANEL: **(E) MDP**
PHASE: 3
BUS AMPACITY: 200A
NEUTRAL: 100%
GROUND: STD

WIRE: 4
TERMINATION: 200A MLO
MOUNTING: SURFACE

CKT NO	DESCRIPTION	LOAD VA	LOAD TYPE	CKT BREAKER P	CKT BREAKER A	CKT BREAKER OPT	CKT BREAKER OPT	CKT BREAKER A	CKT BREAKER P	LOAD TYPE	LOAD VA	DESCRIPTION	CKT NO
1	SPARE (E)			2	20			20	2			SPARE (E)	2
3	SPARE (E)			2	20			20	2			SPARE (E)	4
5	SPARE (E)			2	20			20	2			SPARE (E)	6
7	EMERG AC RECP (E)	1500	N	3	20			20	1	R	360	BIDGS RECPS (E)	8
9	/	1500	N	/	/			20	1	R	360	BIDGS RECPS (E)	10
11	/	1500	N	/	/			20	1	R	360	BIDGS RECPS (E)	12
13	VAULT LIGHTS (E)	100	L	1	20			20	1	L	250	BIDGS LIGHTS (E)	14
15	VAULT RECPS (E)	180	R	1	20			20	1	L	250	BIDGS LIGHTS (E)	16
17	SPARE (E)			1	20			20	1	S	500	SECURITY PNL (E)	18
19	SPARE (E)			2	20		N	20	1	L	468	SWITCH RM 118 LTG (E)	20
21	/			/	/		N	20	1	S	250	FIRE ADSS	22
23	SPACE (E)			-	-		N	20	1			SPARE	24
25	UPS FEED (E)			3	200			-	-			UNUSABLE (E)	26
27	/			/	/			-	-			UNUSABLE (E)	28
29	/			/	/			-	-			UNUSABLE (E)	30

LOAD SUMMARY

LOAD	PHASE	L	R	H	M	MLRG	CM	K	S	N
(E) PNL TTP	A	0	0.7	0.0	0	0	0	0	1	0.0
/	B	0.0	0.7	1.0	0	0	0	0	1	0.0
/	C	0	0.4	2.0	0	0	0	0	2	0.0
(E) UPS	A	0	0	0	0	0	0	0	15.0	0
/	B	0	0	0	0	0	0	0	15.0	0
/	C	0	0	0	0	0	0	0	15.0	0

LOAD TYPE	CONNECTED (KVA) A	B	C	TOTAL	DEMAND FACTOR	DEMAND (KVA) A	B	C	TOTAL
LIGHTING (L)	0.8	0.3	0.0	1.1	1.00	0.8	0.3	0.0	1.1
RECEPTACLE (R)	1.1	1.3	0.7	3.1	1.00	1.1	1.3	0.7	3.1
REC (>10000VA) (R)					0.50	0.0	0.0	0.0	0.0
HVAC (H)	0.0	1.0	2.0	3.0	0.80	0.0	0.8	1.6	2.4
LARGEST MOTOR (M)	0.0	0.0	0.0	0.0	1.25	0.0	0.0	0.0	0.0
REMAIN MOTOR (M)	0.0	0.0	0.0	0.0	1.00	0.0	0.0	0.0	0.0
CONTINUOUS MOTOR (CM)	0.0	0.0	0.0	0.0	1.25	0.0	0.0	0.0	0.0
KITCHEN LOADS (K)	0.0	0.0	0.0	0.0	1.00	0.0	0.0	0.0	0.0
SPECIFIC LOADS (S)	16.0	16.3	17.5	49.8	0.50	8.0	8.1	8.8	24.9
NONCOINCIDENTAL (N)	1.5	1.5	1.5	4.5	0.00	0.0	0.0	0.0	0.0
					TOTAL DEMAND (KVA)	9.9	10.4	11.1	**31.4**
					SPARE (KVA)	14.1	13.6	12.9	40.6
					TOTAL (A/PH)	82.5	87.0	92.3	
					SPARE (A/PH)	117.5	113.0	107.8	

NOTES:
1. IF EXISTING PANELBOARD, "N" IN "OPT" COLUMN INDICATES NEW CIRCUIT BREAKER.

FEED FROM: (E) MDP
VOLTAGE: 208/120
AIC: 10000
ENCLOSURE: NEMA1

PANEL: **(E) TTP**
PHASE: 3
BUS AMPACITY: 200A
NEUTRAL: 100%
GROUND: STD

WIRE: 4
TERMINATION: 200A MLO
MOUNTING: SURFACE

CKT NO	DESCRIPTION	LOAD VA	LOAD TYPE	CKT BREAKER P	CKT BREAKER A	CKT BREAKER OPT	CKT BREAKER OPT	CKT BREAKER A	CKT BREAKER P	LOAD TYPE	LOAD VA	DESCRIPTION	CKT NO
1	SPARE (E)			3	50			50	3			SPARE (E)	2
3	/			/	/			/	/			/	4
5	/			/	/			/	/			/	6
7	SPARE (E)			3	50			50	3			SPARE (E)	8
9	/			/	/			/	/			/	10
11	/			/	/			/	/			/	12
13	SPD (E)			3	30			20	1			SPARE (E)	14
15	/			/	/			20	1	R	360	OUTLET EAST WALL (E)	16
17	/			/	/			20	1	R	360	OUTLET EAST WALL (E)	18
19	QUAD IN FLOOR (E)	360	R	1	15			15	1	R	360	COMM EAST WALL (E)	20
21	QUAD IN FLOOR (E)	360	R	1	15			30	1			SPARE (E)	22
23	SPARE (E)			1	15			20	1	S	1000	FIRE ADSS	24
25	SPARE (E)			1	15			20	1	S	1000	SERVER ROOM RECP (E)	26
27	SPARE (E)			2	30			30	1	S	1000	SERVER ROOM RECP (E)	28
29	/			/	/			30	1	S	1000	SERVER ROOM RECP (E)	30

LOAD TYPE	CONNECTED (KVA) A	B	C	TOTAL	DEMAND FACTOR	DEMAND (KVA) A	B	C	TOTAL
LIGHTING (L)	0.0	0.0	0.0	0.0	1.25	0.0	0.0	0.0	0.0
RECEPTACLE (R)	0.7	0.7	0.4	1.8	1.00	0.7	0.7	0.4	1.8
REC (>10000VA) (R)					0.50	0.0	0.0	0.0	0.0
HVAC (H)	0.0	0.0	0.0	0.0	0.80	0.0	0.0	0.0	0.0
LARGEST MOTOR (M)	0.0	0.0	0.0	0.0	1.25	0.0	0.0	0.0	0.0
REMAIN MOTOR (M)	0.0	0.0	0.0	0.0	1.00	0.0	0.0	0.0	0.0
CONTINUOUS MOTOR (CM)	0.0	0.0	0.0	0.0	1.25	0.0	0.0	0.0	0.0
KITCHEN LOADS (K)	0.0	0.0	0.0	0.0	1.00	0.0	0.0	0.0	0.0
SPECIFIC LOADS (S)	1.0	1.0	2.0	4.0	0.50	0.5	0.5	1.0	2.0
NONCOINCIDENTAL (N)	0.0	0.0	0.0	0.0	0.00	0.0	0.0	0.0	0.0
					TOTAL DEMAND (KVA)	1.2	1.2	1.4	**3.8**
					SPARE (KVA)	22.8	22.8	22.6	68.3
					TOTAL (A/PH)	10.2	10.2	11.3	
					SPARE (A/PH)	189.8	189.8	188.7	

NOTES:
1. IF EXISTING PANELBOARD, "N" IN "OPT" COLUMN INDICATES NEW CIRCUIT BREAKER.

LOAD SUMMARY MDSB 800A, 208/120V, 3PH, 4W, 22KAIC

LOAD	PHASE	TOTAL CONNECTED BY LOAD TYPE (KVA) (L)	(R)	(H)	(M)	(M LRG)	(CM)	(K)	(S)	(N)	(E)
PNL CP1	A	0.0	8.5	0.0	0.0	0.0	0.0	0.0	4.5	0.0	
/	B	0.0	8.1	0.0	0.0	0.0	0.0	0.0	1.8	0.0	
/	C	0.0	8.3	0.0	0.0	0.0	0.0	0.0	4.0	0.0	
PNL PP1	A	0.0	10.8	0.0	0.0	0.0	0.0	0.0	2.6	0.0	
/	B	0.0	6.7	0.0	1.2	1.2	0.0	0.0	5.5	0.0	
/	C	0.0	6.8	0.0	0.0	0.0	0.0	0.0	3.5	0.0	
PNL LP1	A	4.0	0.0	0.0	0.0	0.0	0.0	0.0	0.1	0.0	
/	B	3.6	0.0	0.0	0.0	0.0	0.0	0.0	0.0	0.0	
/	C	2.0	0.0	0.0	0.0	0.0	0.0	0.0	0.0	0.0	
PNL MP1	A	0.0	0.0	10.3	0.0	0.0	0.0	0.0	0.0	0.0	
/	B	0.0	0.0	10.9	0.0	0.0	0.0	0.0	0.0	0.0	
/	C	0.0	0.0	9.5	0.0	0.0	0.0	0.0	0.0	0.0	
PNL MP2	A	0.0	0.0	14.7	4.0	2.3	0.0	0.0	0.0	0.0	
/	B	0.0	0.0	16.2	2.8	2.3	0.0	0.0	0.0	0.0	
/	C	0.0	0.0	15.2	2.9	2.3	0.0	0.0	0.0	0.0	
PNL SR1	A	0.8	2.9	10.0	4.0	1.3	0.0	0.0	26.3	8.3	
/	B	0.6	2.7	11.0	4.2	1.3	0.0	0.0	23.3	8.3	
/	C	0.5	1.1	11.0	4.0	1.3	0.0	0.0	26.5	8.3	
	A										
	B										
	C										
CONNECTED TOTALS	PHASE	(L)	(R)	(H)	(M)	(M LRG)	(CM)	(K)	(S)	(N)	(E)
	A	4.8	22.1	35.0	8.0	2.3	0.0	0.0	33.5	8.3	0.0
	B	4.2	17.5	38.0	8.2	2.3	0.0	0.0	30.5	8.3	0.0
	C	2.5	16.2	35.6	6.9	2.3	0.0	0.0	34.0	8.3	0.0
	TOTAL	11.5	55.8	108.6	23.1	6.9	0.0	0.0	97.9	24.9	0.0

LOAD TYPE	CONNECTED (KVA) A	B	C	TOTAL	DEMAND FACTOR	DEMAND (KVA) A	B	C	TOTAL
LIGHTING (L)	4.8	4.2	2.5	11.5	1.00	4.8	4.2	2.5	11.5
RECEPTACLE (R)	22.1	17.5	16.2	55.8	1.00	3.3	3.3	3.3	10.0
REC (>10000VA) (R)					0.50	9.4	7.1	6.4	22.9
HVAC (H)	35.0	38.0	35.6	108.6	0.80	28.0	30.4	28.5	86.9
LARGEST MOTOR (M)	2.3	2.3	2.3	6.9	1.25	2.9	2.9	2.9	8.6
REMAIN MOTOR (M)	5.7	5.9	4.6	16.2	1.00	5.7	5.9	4.6	16.2
CONTINUOUS MOTOR (CM)	0.0	0.0	0.0	0.0	1.25	0.0	0.0	0.0	0.0
KITCHEN LOADS (K)	0.0	0.0	0.0	0.0	0.65	0.0	0.0	0.0	0.0
SPECIFIC LOADS (S)	33.5	30.5	34.0	97.9	0.50	16.7	15.3	17.0	49.0
NONCOINCIDENTAL (N)	8.3	8.3	8.3	24.9	0.00	0.0	0.0	0.0	0.0
EXISTING(E)	0.0	0.0	0.0	0.0	1.25	0.0	0.0	0.0	0.0
					TOTAL DEMAND (KVA)	70.8	69.0	65.3	**205.1**
					TOTAL (A/PH)	589.8	575.3	543.8	**569.2**

FEED FROM: MDSB
VOLTAGE: 208/120
AIC: 22000
ENCLOSURE: NEMA1

PANEL: **PNL MP1**
PHASE: 3
BUS AMPACITY: 200A
NEUTRAL: 100%
GROUND: STD

WIRE: 4
TERMINATION: 200A MLO
MOUNTING: SURFACE

CKT NO	DESCRIPTION	LOAD VA	LOAD TYPE	CKT BREAKER P	CKT BREAKER A	CKT BREAKER OPT	CKT BREAKER OPT	CKT BREAKER A	CKT BREAKER P	LOAD TYPE	LOAD VA	DESCRIPTION	CKT NO
1	SPARE			1	20		HACR	10	2	H	686	HEAT PUMP HP-10	2
3	SPARE			1	20			/	/	H	686	/	4
5	HEAT PUMP HP-2	686	H	2	10	HACR	HACR	15	2	H	1227	HEAT PUMP HP-11	6
7	/	686	H	/	/			/	/	H	1227	/	8
9	HEAT PUMP HP-3	1508	H	2	20	HACR	HACR	10	2	H	686	HEAT PUMP HP-12	10
11	/	1508	H	/	/			/	/	H	686	/	12
13	HEAT PUMP HP-4	1508	H	2	20	HACR	HACR	20	2	H	1508	HEAT PUMP HP-13	14
15	/	1508	H	/	/			/	/	H	1508	/	16
17	HEAT PUMP HP-5	686	H	2	10	HACR		20	1	H	200	EVAP COOLER EC-1 HEAT TRACE	18
19	/	686	H	/	/		HACR	10	2	H	686	HEAT PUMP HP-1	20
21	HEAT PUMP HP-6	1227	H	2	15	HACR		/	/	H	686	/	22
23	/	1227	H	/	/			-	-			(SHUNT TRIP)	24
25	HEAT PUMP HP-7	1581	H	2	20	HACR		20	1			SPARE	26
27	/	1581	H	/	/			20	1			SPARE	28
29	HEAT PUMP HP-8	1747	H	2	25	HACR		20	1			SPARE	30
31	/	1747	H	/	/			-	-			SPACE	32
33	HEAT PUMP HP-9	1508	H	2	20	HACR		-	-			SPACE	34
35	/	1508	H	/	/			-	-			SPACE	36
37	SPARE			1	20			-	-			SPACE	38
39	SPACE			-	-			-	-			SPACE	40
41	SPACE			-	-			-	-			SPACE	42

LOAD TYPE	CONNECTED (KVA) A	B	C	TOTAL	DEMAND FACTOR	DEMAND (KVA) A	B	C	TOTAL
LIGHTING (L)	0.0	0.0	0.0	0.0	1.25	0.0	0.0	0.0	0.0
RECEPTACLE (R)	0.0	0.0	0.0	0.0	1.00	0.0	0.0	0.0	0.0
REC (>10000VA) (R)					0.50	0.0	0.0	0.0	0.0
HVAC (H)	10.3	10.9	9.5	30.7	1.00	10.3	10.9	9.5	30.7
LARGEST MOTOR (M)	0.0	0.0	0.0	0.0	1.25	0.0	0.0	0.0	0.0
REMAIN MOTOR (M)	0.0	0.0	0.0	0.0	1.00	0.0	0.0	0.0	0.0
CONTINUOUS MOTOR (CM)	0.0	0.0	0.0	0.0	1.25	0.0	0.0	0.0	0.0
KITCHEN LOADS (K)	0.0	0.0	0.0	0.0	1.00	0.0	0.0	0.0	0.0
SPECIFIC LOADS (S)	0.0	0.0	0.0	0.0	1.00	0.0	0.0	0.0	0.0
NONCOINCIDENTAL (N)	0.0	0.0	0.0	0.0	0.00	0.0	0.0	0.0	0.0
					TOTAL DEMAND (KVA)	10.3	10.9	9.5	**30.7**
					SPARE (KVA)	13.7	13.1	14.5	41.4
					TOTAL (A/PH)	86.0	90.8	79.0	
					SPARE (A/PH)	114.0	109.2	121.0	

FEED FROM: MDSB
VOLTAGE: 208/120
AIC: 22000
ENCLOSURE: NEMA1

PANEL: **PNL MP2**
PHASE: 3
BUS AMPACITY: 200A
NEUTRAL: 100%
GROUND: STD

WIRE: 4
TERMINATION: 200A MLO
MOUNTING: SURFACE

CKT NO	DESCRIPTION	LOAD VA	LOAD TYPE	CKT BREAKER P	CKT BREAKER A	CKT BREAKER OPT	CKT BREAKER OPT	CKT BREAKER A	CKT BREAKER P	LOAD TYPE	LOAD VA	DESCRIPTION	CKT NO
1	WATER HEATER WH-1 & HWSP-1	500	H	1	20			15	1	M	386	EXH FANS EF-1, 2, 3	2
3	WATER HEATER WH-2	1500	H	1	20			20	1			SPARE	4
5	SPARE			1	20			15	1	M	612	PUMP P-4	6
7	CONDENSING UNIT CU-1	1248	H	2	20	HACR		15	1	M	612	PUMP P-3	8
9	/	1248	H	/	/			15	1	H	500	BOILER B-1	10
11	ENERGY RECOVERY UNIT ERU-1	2306	M	3	30			15	1	H	500	BOILER B-2	12
13	/	2306	M	/	/			15	1	M	500	CHEM BOOSTER PUMP	14
15	/	2306	M	/	/			15	1	M	500	GLYCOL FEED PUMP	16
17	ELEC UNIT HTR UH-1	6667	H	3	60			20	1	H	200	UVC LIGHTS	18
19	/	6667	H	/	/		HACR	10	2	H	686	HEAT PUMP HP-14	20
21	/	6667	H	/	/			/	/	H	686	/	22
23	ELEC UNIT HTR UH-2	1650	H	2	30			20	1			SPARE	24
25	/	1650	H	/	/			15	1	M	187	EXH FAN EF-4	26
27	ELEC UNIT HTR UH-3	1650	H	2	30			20	1			SPARE	28
29	/	1650	H	/	/			20	1			SPARE	30
31	ELEC UNIT HTR UH-4	1650	H	2	30			20	1			SPARE	32
33	/	1650	H	/	/			20	1			SPARE	34
35	CAB UNIT HTR CUH-1	2250	H	2	30			20	1			SPARE	36
37	/	2250	H	/	/			-	-			SPACE	38
39	CAB UNIT HTR CUH-2	2250	H	2	30			-	-			SPACE	40
41	/	2250	H	/	/			-	-			SPACE	42

LOAD TYPE	CONNECTED (KVA) A	B	C	TOTAL	DEMAND FACTOR	DEMAND (KVA) A	B	C	TOTAL
LIGHTING (L)	0.0	0.0	0.0	0.0	1.25	0.0	0.0	0.0	0.0
RECEPTACLE (R)	0.0	0.0	0.0	0.0	1.00	0.0	0.0	0.0	0.0
REC (>10000VA) (R)					0.50	0.0	0.0	0.0	0.0
HVAC (H)	14.7	16.2	15.2	46.0	1.00	14.7	16.2	15.2	46.0
LARGEST MOTOR (M)	2.3	2.3	2.3	6.9	1.25	2.9	2.9	2.9	8.6
REMAIN MOTOR (M)	1.7	0.5	0.6	2.8	1.00	1.7	0.5	0.6	2.8
CONTINUOUS MOTOR (CM)	0.0	0.0	0.0	0.0	1.25	0.0	0.0	0.0	0.0
KITCHEN LOADS (K)	0.0	0.0	0.0	0.0	1.00	0.0	0.0	0.0	0.0
SPECIFIC LOADS (S)	0.0	0.0	0.0	0.0	1.00	0.0	0.0	0.0	0.0
NONCOINCIDENTAL (N)	0.0	0.0	0.0	0.0	0.00	0.0	0.0	0.0	0.0
					TOTAL DEMAND (KVA)	19.2	19.5	18.7	**57.4**
					SPARE (KVA)	4.8	4.5	5.3	14.6
					TOTAL (A/PH)	160.2	162.8	155.5	
					SPARE (A/PH)	39.8	37.2	44.5	

FEED FROM: ATS
VOLTAGE: 208/120
AIC: 22000
ENCLOSURE: NEMA1

PANEL: **PNL SR1**
PHASE: 3
BUS AMPACITY: 400A
NEUTRAL: 100%
GROUND: STD

WIRE: 4
TERMINATION: 400A MCB
MOUNTING: SURFACE

CKT NO	DESCRIPTION	LOAD VA	LOAD TYPE	CKT BREAKER P	CKT BREAKER A	CKT BREAKER OPT	CKT BREAKER OPT	CKT BREAKER A	CKT BREAKER P	LOAD TYPE	LOAD VA	DESCRIPTION	CKT NO
1	SPD			3	30		ST	60	3			PNL SR2	2
3	/			/	/			/	/			(NOTE 2)	4
5	/			/	/			/	/				6
7	ELEC. ROOM RECEPT.			-	-			-	-			(SHUNT TRIP)	8
9	SPARE			1	20			60	3	H	4570	ACU-2	10
11	/	1273	M	/	/			/	/	H	4570	/	12
13	EVAP COOLER EC-1 FAN	1273	M	3	20			/	/	H	4570	/	14
15	/	1273	M	/	/			/	-			(SHUNT TRIP)	16
17	/	1273	M	/	/			20	1			SPARE TO GEN.	18
19	EVAP COOLER EC-1 FAN	1273	M	3	20			20	3	M	900	P-1	20
21	/	1273	M	/	/			/	/	M	900	/	22
23	/	1273	M	/	/			/	/	M	900	/	24
25	EVAP COOLER EC-1 PUMP	552	M	3	15			20	1	N	900	P-2	26
27	/	552	M	/	/			20	1	N	900	/	28
29	/	552	M	/	/			20	1	N	900	/	30
31	EVAP COOLER EC-1 HEATER	1333	N	3	20			20	1			SPARE	32
33	/	1333	N	/	/			20	1	S	2000	UPS: BATTERY CHARGER & HEATER	34
35	/	1333	N	/	/							SPACE	36
37	PNL SR3			3	60			-	-			SPACE	38
39	/			/	/			-	-			SPACE	40
41	SPARE			1	20			-	-			SPACE	42

LOAD SUMMARY

LOAD	PHASE	L	R	H	M	MLRG	CM	K	S	N	D
(E) PNL MDP	A	0.82	1.08	4.42	0	0	0	0	16	6.07	0
/	B	0.25	1.26	5.42	0	0	0	0	16.25	6.07	0
/	C	0	0.72	6.42	0	0	0	0	17.5	6.07	0
PNL SR2	A	0	1.08	0	0	0	0	0	7.75	0	0
/	B	0.312	1.44	0	0	0	0	0	5	0	0
/	C	0	0.36	0	0	0	0	0	7.5	0	0
PNL SR3	A	0	0.72	0	0	0	0	0	2.5	0	0
/	B	0	0	0	0.25	0.25	0	0	2	0	0
/	C	0.512	0	0	0	0	0	0	1	0	0

LOAD TYPE	CONNECTED (KVA) A	B	C	TOTAL	DEMAND FACTOR	DEMAND (KVA) A	B	C	TOTAL
LIGHTING (L)	0.8	0.6	0.5	1.9	1.25	1.0	0.7	0.6	2.4
RECEPTACLE (R)	2.9	2.7	1.1	6.7	1.00	2.9	2.7	1.1	6.7
REC (>10000VA) (R)					0.50	0.0	0.0	0.0	0.0
HVAC (H)	9.0	10.0	11.0	30.0	1.00	9.0	10.0	11.0	30.0
LARGEST MOTOR (M)	1.3	1.3	1.3	3.8	1.25	1.6	1.6	1.6	4.8
REMAIN MOTOR (M)	2.7	3.0	4.0	9.7	1.00	2.7	3.0	4.0	9.7
CONTINUOUS MOTOR (CM)	0.0	0.0	0.0	0.0	1.25	0.0	0.0	0.0	0.0
KITCHEN LOADS (K)	0.0	0.0	0.0	0.0	1.00	0.0	0.0	0.0	0.0
SPECIFIC LOADS (S)	26.3	25.3	26.0	77.5	1.00	26.3	25.3	26.0	77.5
NONCOINCIDENTAL (N)	8.3	8.3	8.3	24.9	0.00	0.0	0.0	0.0	0.0
					TOTAL DEMAND (KVA)	43.5	43.2	44.3	**131.0**
					SPARE (KVA)	4.5	4.8	3.7	13.1
					TOTAL (A/PH)	362.1	360.0	369.1	
					SPARE (A/PH)	37.9	40.0	30.9	

NOTES:
"ST" IN "OPT" COLUMN INDICATES SHUNT TRIP CIRCUIT BREAKER.
1. CIRCUIT BREAKER SHALL BE SHUNT TRIPPED FROM ASDS PANEL IN SWITCH RM 118 UPON DETECTION OF FIRE.
2. CIRCUIT BREAKER SHALL BE SHUNT TRIPPED FROM ASDS PANEL IN SERVER RM 119 UPON DETECTION OF FIRE.

FEED FROM: SR1
VOLTAGE: 208/120
AIC: 10000
ENCLOSURE: NEMA1

PANEL: **SR2**
PHASE: 3
BUS AMPACITY: 60A
NEUTRAL: 100%
GROUND: STD

WIRE: 4
TERMINATION: 60A MLO
MOUNTING: SURFACE

CKT NO	DESCRIPTION	LOAD VA	LOAD TYPE	CKT BREAKER P	CKT BREAKER A	CKT BREAKER OPT	CKT BREAKER OPT	CKT BREAKER A	CKT BREAKER P	LOAD TYPE	LOAD VA	DESCRIPTION	CKT NO
1	RACK L5-30R	2500	S	1	30			20	1	R	360	RACK QUAD	2
3	RACK L5-30R	2500	S	1	30			30	1	S	2500	RACK L5-30R	4
5	RACK L5-30R	2500	S	1	30			20	1	R	360	RACK QUAD	6
7	RACK L5-30R	2500	S	1	30			30	1	S	2500	RACK L5-30R	8
9	RACK QUAD	360	R	1	20			20	1	R	360	RACK QUAD	10
11	RACK L5-30R	2500	S	1	30			30	1	S	2500	RACK L5-30R	12
13	WALL QUADS	720	R	1	20			20	1	S	250	FIRE ASDS	14
15	WALL QUADS	720	R	1	20			20	1	L	312	SERVER RM 119 LTG	16
17	SPARE			1	20			20	1			SPARE	18
19	SPACE			-	-			-	-			SPACE	20
21	SPACE			-	-			-	-			SPACE	22
23	SPACE			-	-			-	-			SPACE	24
25	SPACE			-	-			-	-			SPACE	26
27	SPACE			-	-			-	-			SPACE	28
29	SPACE			-	-			-	-			SPACE	30

LOAD TYPE	CONNECTED (KVA) A	B	C	TOTAL	DEMAND FACTOR	DEMAND (KVA) A	B	C	TOTAL
LIGHTING (L)	0.0	0.3	0.0	0.3	1.25	0.0	0.4	0.0	0.4
RECEPTACLE (R)	1.1	1.4	0.4	2.9	1.00	1.1	1.4	0.4	2.9
REC (>10000VA) (R)					0.50	0.0	0.0	0.0	0.0
HVAC (H)	0.0	0.0	0.0	0.0	0.80	0.0	0.0	0.0	0.0
LARGEST MOTOR (M)	0.0	0.0	0.0	0.0	1.25	0.0	0.0	0.0	0.0
REMAIN MOTOR (M)	0.0	0.0	0.0	0.0	1.00

FEED FROM: MDPB
VOLTAGE: 208/120
AIC: 22000
ENCLOSURE: NEMA1

PANEL: **PNL CP1**
PHASE: 3
BUS AMPACITY: 200A
NEUTRAL: 100%
GROUND: STD

WIRE: 4
TERMINATION: 200A MLO, FEED-THRU
MOUNTING: SURFACE

CKT NO	DESCRIPTION	LOAD VA	LOAD TYPE	CKT BREAKER P	CKT BREAKER A	CKT BREAKER OPT	CKT BREAKER OPT	CKT BREAKER A	CKT BREAKER P	LOAD TYPE	LOAD VA	DESCRIPTION	CKT NO
1	SECURITY CAMERA PWR	500	S	1	20			30	1	S	1500	EDIT STUDIO RACK EQUIP- L5-3GR	2
3	DDC CONTROL PWR	500	S	1	20			20	1	S	1000	EDIT STUDIO RACK EQUIP - RECP	4
5	PORTABLE SATELLITE DISH RECP	500	S	1	20			30	1	S	1500	EDIT STUDIO RACK EQUIP- L5-3GR	6
7	AV RACK RECP RM 123	250	S	1	20			20	1	S	1000	EDIT STUDIO RACK EQUIP- RECP	8
9	AV RACK RECP RM 114	250	S	1	20			20	1	R	360	COMM RM 113 RACK QUAD	10
11	SPARE			1	20			-	-			(SHUNT TRIP)	12
13	SPARE			1	20			20	1	R	360	COMM RM 113 WALL QUAD	14
15	SPARE			1	20			-	-			(SHUNT TRIP)	16
17	SPARE			1	20			20	1	R	360	COMM RM 113 WALL QUAD	18
19	SPARE			1	20			-	-			(SHUNT TRIP)	20
21	SPARE			1	20			20	1	R	360	COMM RM 113 WALL QUAD	22
23	SPARE			1	20			-	-			(SHUNT TRIP)	24
25	SPARE			1	20			20	1			SPARE	26
27	SPARE			1	20			20	1			SPARE	28
29	SERVER RM 119 WALL QUAD	360	R	1	20			20	1			SPARE	30
31	SERVER RM 119 WALL QUAD	360	R	1	20			-	-			SPACE	32
33	SERVER RM 119 WALL QUAD	360	R	1	20			-	-			SPACE	34
35	SERVER RM 119 WALL QUAD	360	R	1	20			-	-			SPACE	36
37	SPARE			1	20			30	3			SPD	38
39	SPARE			1	20			/	/			/	40
41	SPACE			-	-			/	/			/	42

LOAD SUMMARY

LOAD	PHASE	kVA L	R	H	M	MLRG	CM	K	S	N
PNL CP2	A	0	7.92	0	0	0	0	0	1.5	0
/	B	0	7.2	0	0	0	0	0	0.25	0
/	C	0	7.2	0	0	0	0	0	2	0

LOAD TYPE	CONNECTED (KVA) A	B	C	TOTAL	DEMAND FACTOR	DEMAND (KVA) A	B	C	TOTAL
LIGHTING (L)	0.0	0.0	0.0	0.0	1.25	0.0	0.0	0.0	0.0
RECEPTACLE (R)	8.6	8.3	8.3	25.2	1.00	3.3	3.3	3.3	10.0
REC (>10000VA) (R)					0.50	2.7	2.5	2.5	7.6
HVAC (H)	0.0	0.0	0.0	0.0	1.00	0.0	0.0	0.0	0.0
LARGEST MOTOR (M)	0.0	0.0	0.0	0.0	1.25	0.0	0.0	0.0	0.0
REMAIN MOTOR (M)	0.0	0.0	0.0	0.0	1.00	0.0	0.0	0.0	0.0
CONTINUOUS MOTOR (CM)	0.0	0.0	0.0	0.0	1.25	0.0	0.0	0.0	0.0
KITCHEN LOADS (K)	0.0	0.0	0.0	0.0	1.00	0.0	0.0	0.0	0.0
SPECIFIC LOADS (S)	4.8	2.0	4.0	10.8	1.00	4.8	2.0	4.0	10.8
NONCOINCIDENTAL (N)	0.0	0.0	0.0	0.0	0.00	0.0	0.0	0.0	0.0
					TOTAL DEMAND (KVA)	10.7	7.8	9.8	**28.4**
					SPARE (KVA)	13.3	16.2	14.2	43.7
					TOTAL (A/PH)	89.5	65.0	81.7	
					SPARE (A/PH)	110.5	135.0	118.3	

FEED FROM: PNL CP1
VOLTAGE: 208/120
AIC: 22000
ENCLOSURE: NEMA1

PANEL: **PNL CP2**
PHASE: 3
BUS AMPACITY: 200A
NEUTRAL: 100%
GROUND: STD

WIRE: 4
TERMINATION: 200A MLO
MOUNTING: SURFACE

CKT NO	DESCRIPTION	LOAD VA	LOAD TYPE	CKT BREAKER P	CKT BREAKER A	CKT BREAKER OPT	CKT BREAKER OPT	CKT BREAKER A	CKT BREAKER P	LOAD TYPE	LOAD VA	DESCRIPTION	CKT NO
1	SPARE			1	20			20	1	S	1000	COPY/PRINTER RECP	2
3	RM 104, 105 RECPS	1080	R	1	20			20	1	R	540	RM 117 RECPS	4
5	RM 103 RECPS	720	R	1	20			20	1	R	720	RM 117 RECPS	6
7	RM 103 RECPS	1080	R	1	20			20	1	R	1080	RM 117 RECPS	8
9	RM 124 RECPS	360	R	1	20			20	1	R	720	RM 120 RECPS	10
11	RM 124 RECPS	360	R	1	20			30	1	R	540	RM 120 RECPS	12
13	RM 124 RECPS	360	R	1	20			20	1	R	900	RM 120, 122 RECPS	14
15	RM 124 RECPS	360	R	1	20			20	1	R	540	RM 102 RECPS	16
17	RM 123 PROJECTOR RECP	1000	S	1	20			20	1	R	900	RM 102 RECPS	18
19	RM 123 RECPS	1150	S, R	1	20			20	1	R	720	RM 102 RECPS	20
21	RM 114 RECPS	970	S, R	1	20			20	1	R	1020	RM 102 RECPS	22
23	RM 114 FLOOR RECPS	1620	R	1	20			20	1	R	720	RM 102 RECPS	24
25	RM 114 FLOOR RECPS	1620	R	1	20			20	1	R	1080	RM 102 RECPS	26
27	RM 114 FLOOR RECPS	1620	R	1	20			20	1	R	360	RM 102 RECPS	28
29	RM 114 FLOOR RECPS	1620	R	1	20			20	1	S	1000	RM 114 PROJECTOR	30
31	SPARE			1	20			20	1	S, R	790	RM 107, 125 RECPS	32
33	SPARE			1	20			-	-			(SHUNT TRIP)	34
35	SPARE			1	20			20	1			SPARE	36
37	SPACE			-	-			-	-			SPACE	38
39	SPACE			-	-			-	-			SPACE	40
41	SPACE			-	-			-	-			SPACE	42

LOAD TYPE	CONNECTED (KVA) A	B	C	TOTAL	DEMAND FACTOR	DEMAND (KVA) A	B	C	TOTAL
LIGHTING (L)	0.0	0.0	0.0	0.0	1.25	0.0	0.0	0.0	0.0
RECEPTACLE (R)	8.3	7.3	7.2	22.8	1.00	3.3	3.3	3.3	10.0
REC (>10000VA) (R)					0.50	2.5	2.0	1.9	6.4
HVAC (H)	0.0	0.0	0.0	0.0	1.00	0.0	0.0	0.0	0.0
LARGEST MOTOR (M)	0.0	0.0	0.0	0.0	1.25	0.0	0.0	0.0	0.0
REMAIN MOTOR (M)	0.0	0.0	0.0	0.0	1.00	0.0	0.0	0.0	0.0
CONTINUOUS MOTOR (CM)	0.0	0.0	0.0	0.0	1.25	0.0	0.0	0.0	0.0
KITCHEN LOADS (K)	0.0	0.0	0.0	0.0	1.00	0.0	0.0	0.0	0.0
SPECIFIC LOADS (S)	1.5	0.3	2.0	3.8	1.00	1.5	0.3	2.0	3.8
NONCOINCIDENTAL (N)	0.0	0.0	0.0	0.0	0.00	0.0	0.0	0.0	0.0
					TOTAL DEMAND (KVA)	7.3	5.6	7.3	**20.2**
					SPARE (KVA)	16.7	18.4	16.7	51.9
					TOTAL (A/PH)	60.9	46.5	60.5	
					SPARE (A/PH)	139.1	153.5	139.5	

FEED FROM: MDSB
VOLTAGE: 208/120
AIC: 22000
ENCLOSURE: NEMA1

PANEL: **PNL LP1**
PHASE: 3
BUS AMPACITY: 100A
NEUTRAL: 100%
GROUND: STD

WIRE: 4
TERMINATION: 100A MLO
MOUNTING: SURFACE

CKT NO	DESCRIPTION	LOAD VA	LOAD TYPE	CKT BREAKER P	CKT BREAKER A	CKT BREAKER OPT	CKT BREAKER OPT	CKT BREAKER A	CKT BREAKER P	LOAD TYPE	LOAD VA	DESCRIPTION	CKT NO
1	LTG RM 107, 108, 109, 110	1362	L	1	20			20	1	L	1044	LTG RM 122, 123, 124	2
3	LTG RM 114, 116, 125	1032	L	1	20			20	1	L	1300	LTG RM 117, 120	4
5	LTG RM 103, 104, 105	1248	L	1	20			20	1	L	752	LTG CORRIDOR	6
7	LIGHTING CONTACTOR LC1	100	S	1	20			20	1	L	1560	LTG 102	8
9	SPARE			1	20			20	1	L	1114	EXTERIOR LTG	10
11	SPARE			1	20			20	1	L	864	EXTERIOR LTG	12
13	SPACE			-	-			-	-			SPACE	14
15	SPACE			-	-			-	-			SPACE	16
17	SPACE			-	-			-	-			SPACE	18

LOAD TYPE	CONNECTED (KVA) A	B	C	TOTAL	DEMAND FACTOR	DEMAND (KVA) A	B	C	TOTAL
LIGHTING (L)	4.0	3.4	2.9	10.3	1.25	5.0	4.3	3.6	12.8
RECEPTACLE (R)	0.0	0.0	0.0	0.0	1.00	0.0	0.0	0.0	0.0
REC (>10000VA) (R)					0.50	0.0	0.0	0.0	0.0
HVAC (H)	0.0	0.0	0.0	0.0	1.00	0.0	0.0	0.0	0.0
LARGEST MOTOR (M)	0.0	0.0	0.0	0.0	1.25	0.0	0.0	0.0	0.0
REMAIN MOTOR (M)	0.0	0.0	0.0	0.0	1.00	0.0	0.0	0.0	0.0
CONTINUOUS MOTOR (CM)	0.0	0.0	0.0	0.0	1.25	0.0	0.0	0.0	0.0
KITCHEN LOADS (K)	0.0	0.0	0.0	0.0	1.00	0.0	0.0	0.0	0.0
SPECIFIC LOADS (S)	0.1	0.0	0.0	0.1	1.00	0.1	0.0	0.0	0.1
NONCOINCIDENTAL (N)	0.0	0.0	0.0	0.0	0.00	0.0	0.0	0.0	0.0
					TOTAL DEMAND (KVA)	5.1	4.3	3.6	**12.9**
					SPARE (KVA)	6.9	7.7	8.4	23.1
					TOTAL (A/PH)	42.1	35.9	29.8	
					SPARE (A/PH)	57.5	64.1	70.2	

FEED FROM: MDSB
VOLTAGE: 208/120
AIC: 42000
ENCLOSURE: NEMA1

PANEL: **PNL PP1**
PHASE: 3
BUS AMPACITY: 200A
NEUTRAL: 100%
GROUND: STD

WIRE: 4
TERMINATION: 200A MLO, FEED-THRU
MOUNTING: SURFACE

CKT NO	DESCRIPTION	LOAD VA	LOAD TYPE	CKT BREAKER P	CKT BREAKER A	CKT BREAKER OPT	CKT BREAKER OPT	CKT BREAKER A	CKT BREAKER P	LOAD TYPE	LOAD VA	DESCRIPTION	CKT NO
1	RM 107, OUTDR RECPS	540	R	1	20			20	1	R	360	RM 104 RECPS	2
3	RM 107 REF RECP	500	S	1	15			20	1	R	540	RM 104 RECPS	4
5	RM 107 REF RECP	500	S	1	15			20	1	R	720	RM 106 RECPS	6
7	RM 107 RECPS	360	R	1	20			20	1	R	720	RM 103 RECPS	8
9	WAINT SHOP 104 ROLLING DOOR	1176	M	1	20			20	1	R	720	RM 124 RECPS	10
11	RM 107 RECPS	360	R	1	20			20	1	R	720	RM 124 RECPS	12
13	RM 108 RECPS	360	R	1	20			20	1	R	1260	RM 122, 123 RECPS	14
15	RM 108 RECPS	360	R	1	20			20	1	R	720	RM 114 RECPS	16
17	EWC RECP	480	S	1	20			20	1	R	1080	RM 116 RECPS	18
19	RM 109, CORRIDOR RECPS	900	R	1	20			-	-			(SHUNT TRIP)	20
21	RM 110 RECPS	360	R	1	20			20	1	R	1080	RM 117 RECPS	22
23	(SHUNT TRIP)			-	-			20	1	R	540	RM 117 RECPS	24
25	RM 111, 112, 113, 115, OUTDR RECPS	1080	R	1	20			20	1	R	900	RM 120 RECPS	26
27	(SHUNT TRIP)			-	-			20	1	R	540	RM 120 RECPS	28
29	RM 104, 125 RECPS	1080	R	1	20			20	1	R	720	RM 120, 122 RECPS	30
31	TRAUMAN RM 114 MOTORIZED SCREEN	100	S	1	20			20	1	R	540	RM 117 RECPS	32
33	RM 105 RECPS	900	R	1	20			20	1			SPARE	34
35	SPARE			1	20			20	1	R	360	RM 110 RECPS	36
37	SPACE			-	-			-	-			SPACE	38
39	SPACE			-	-			-	-			SPACE	40
41	SPACE			-	-			-	-			SPACE	42

LOAD SUMMARY

LOAD	PHASE	kVA L	R	H	M	MLRG	CM	K	S	N
PNL PP2	A	0	3.6	0	0	0	0	0	2.5	0
/	B	0	1.62	0	0	0	0	0	5	0
/	C	0	1.26	0	0	0	0	0	2.5	0

LOAD TYPE	CONNECTED (KVA) A	B	C	TOTAL	DEMAND FACTOR	DEMAND (KVA) A	B	C	TOTAL
LIGHTING (L)	0.0	0.0	0.0	0.0	1.25	0.0	0.0	0.0	0.0
RECEPTACLE (R)	10.6	6.8	6.8	24.3	1.00	3.3	3.3	3.3	10.0
REC (>10000VA) (R)					0.50	3.6	1.8	1.8	7.2
HVAC (H)	0.0	0.0	0.0	0.0	1.00	0.0	0.0	0.0	0.0
LARGEST MOTOR (M)	0.0	1.2	0.0	1.2	1.25	0.0	1.5	0.0	1.5
REMAIN MOTOR (M)	0.0	0.0	0.0	0.0	1.00	0.0	0.0	0.0	0.0
CONTINUOUS MOTOR (CM)	0.0	0.0	0.0	0.0	1.25	0.0	0.0	0.0	0.0
KITCHEN LOADS (K)	0.0	0.0	0.0	0.0	1.00	0.0	0.0	0.0	0.0
SPECIFIC LOADS (S)	2.6	5.5	3.5	11.6	1.00	2.6	5.5	3.5	11.6
NONCOINCIDENTAL (N)	0.0	0.0	0.0	0.0	0.00	0.0	0.0	0.0	0.0
					TOTAL DEMAND (KVA)	9.6	12.1	8.6	**30.2**
					SPARE (KVA)	14.4	11.9	15.4	41.9
					TOTAL (A/PH)	79.8	100.5	71.4	
					SPARE (A/PH)	120.2	99.5	128.6	

FEED FROM: PNL PP1
VOLTAGE: 208/120
AIC: 22000
ENCLOSURE: NEMA1

PANEL: **PNL PP2**
PHASE: 3
BUS AMPACITY: 200A
NEUTRAL: 100%
GROUND: STD

WIRE: 4
TERMINATION: 200A MLO
MOUNTING: SURFACE

CKT NO	DESCRIPTION	LOAD VA	LOAD TYPE	CKT BREAKER P	CKT BREAKER A	CKT BREAKER OPT	CKT BREAKER OPT	CKT BREAKER A	CKT BREAKER P	LOAD TYPE	LOAD VA	DESCRIPTION	CKT NO
1	RM 102 RECPS	540	R	1	20			20	1	R	900	RM 102, OUTDR RECPS	2
3	RM 102 RECPS	720	R	1	20			20	1	R	900	RM 102 RECPS	4
5	RM 102 RECPS	720	R	1	20			20	1	R	540	RM 102, OUTDR RECPS	6
7	RM 102 RECPS	1400	R	1	20			20	1	R	900	RM 102 RECPS	8
9	JISCC TRAILER RECP	2500	S	2	30			20	1			SPARE	10
11	/	2500	S	/	/			20	1			SPARE	12
13	JISCC TRAILER RECP	2500	S	2	30			20	1			SPARE	14
15	/	2500	S	/	/			20	1			SPARE	16
17	SPARE			1	20			20	1			SPARE	18
19	SPACE			-	-			-	-			SPACE	20
21	SPACE			-	-			-	-			SPACE	22
23	SPACE			-	-			-	-			SPACE	24
25	SPACE			-	-			-	-			SPACE	26
27	SPACE			-	-			-	-			SPACE	28
29	SPACE			-	-			-	-			SPACE	30
31	SPACE			-	-			-	-			SPACE	32
33	SPACE			-	-			-	-			SPACE	34
35	SPACE			-	-			-	-			SPACE	36
37	SPACE			-	-			-	-			SPACE	38
39	SPACE			-	-			-	-			SPACE	40
41	SPACE			-	-			-	-			SPACE	42

LOAD TYPE	CONNECTED (KVA) A	B	C	TOTAL	DEMAND FACTOR	DEMAND (KVA) A	B	C	TOTAL
LIGHTING (L)	0.0	0.0	0.0	0.0	1.25	0.0	0.0	0.0	0.0
RECEPTACLE (R)	3.7	1.6	1.3	6.6	1.00	3.3	1.6	1.3	6.6
REC (>10000VA) (R)					0.50	0.2	0.0	0.0	0.0
HVAC (H)	0.0	0.0	0.0	0.0	1.00	0.0	0.0	0.0	0.0
LARGEST MOTOR (M)	0.0	0.0	0.0	0.0	1.25	0.0	0.0	0.0	0.0
REMAIN MOTOR (M)	0.0	0.0	0.0	0.0	1.00	0.0	0.0	0.0	0.0
CONTINUOUS MOTOR (CM)	0.0	0.0	0.0	0.0	1.25	0.0	0.0	0.0	0.0
KITCHEN LOADS (K)	0.0	0.0	0.0	0.0	1.00	0.0	0.0	0.0	0.0
SPECIFIC LOADS (S)	2.5	5.0	2.5	10.0	1.00	2.5	5.0	2.5	10.0
NONCOINCIDENTAL (N)	0.0	0.0	0.0	0.0	0.00	0.0	0.0	0.0	0.0
					TOTAL DEMAND (KVA)	6.0	6.6	3.8	**16.4**
					SPARE (KVA)	18.0	17.4	20.2	55.4
					TOTAL (A/PH)	50.3	55.2	31.3	
					SPARE (A/PH)	149.7	144.8	168.7	

EQUIPMENT SCHEDULE

TAG NO.	EQUIPMENT TYPE	SUPPLY VOLTS	MOTOR HP	MOTOR FLA	UNIT WATTS	TOTAL AMPS	VA PER PHASE	MCA	MANUF MOCP	BRANCH WIRE	CONDUIT	LOCAL DISCONNECT	BRANCH CIRCUIT	NOTES
HP-1	HEAT PUMP	208/1PH	1/10				686	6.6	10	2#12, #12G	3/4"	30A/2P/NF	MP1-1,3	1
HP-2	HEAT PUMP	208/1PH	1/10				686	6.6	10	2#12, #12G	3/4"	30A/2P/NF	MP1-5,7	1
HP-3	HEAT PUMP	208/1PH	1/2				1508	14.5	20	2#12, #12G	3/4"	30A/2P/NF	MP1-9,11	1
HP-4	HEAT PUMP	208/1PH	1/2				1508	14.5	20	2#12, #12G	3/4"	30A/2P/NF	MP1-13,15	1
HP-5	HEAT PUMP	208/1PH	1/10				686	6.6	10	2#12, #12G	3/4"	30A/2P/NF	MP1-17,19	1
HP-6	HEAT PUMP	208/1PH	1/2				1227	11.8	15	2#12, #12G	3/4"	30A/2P/NF	MP1-21,23	1
HP-7	HEAT PUMP	208/1PH	1/2				1581	15.2	20	2#12, #12G	3/4"	30A/2P/NF	MP1-25,27	1
HP-8	HEAT PUMP	208/1PH	1/2				1747	16.8	25	2#10, #10G	3/4"	30A/2P/NF	MP1-29,31	1
HP-9	HEAT PUMP	208/1PH	1/2				1508	14.5	20	2#12, #12G	3/4"	30A/2P/NF	MP1-33,35	1
HP-10	HEAT PUMP	208/1PH	1/10				686	6.6	10	2#12, #12G	3/4"	30A/2P/NF	MP1-2,4	1
HP-11	HEAT PUMP	208/1PH	1/2				1227	11.8	15	2#12, #12G	3/4"	30A/2P/NF	MP1-6,8	1
HP-12	HEAT PUMP	208/1PH	1/10				686	6.6	10	2#12, #12G	3/4"	30A/2P/NF	MP1-10,12	1
HP-13	HEAT PUMP	208/1PH	1/2				1508	14.5	20	2#12, #12G	3/4"	30A/2P/NF	MP1-14,16	1
HP-14	HEAT PUMP	208/1PH	1/10				686	6.6	10	2#12, #12G	3/4"	30A/2P/NF	MP2-20,22	1
EC-1	EVAPORATIVE COOLER - FAN	208/3PH	3	10.6		10.6	1273	13.3		3#12, #12G	3/4"	30A/3P/NF, NEMA 3R	SR1-13,15,17	1, 3
	EVAPORATIVE COOLER - FAN	208/3PH	3	10.6		10.6	1273	13.3		3#12, #12G	3/4"	30A/3P/NF, NEMA 3R	SR1-19,21,23	1, 3
	EVAPORATIVE COOLER - PUMP	208/3PH	1	4.6		4.6	552	5.8		3#12, #12G	3/4"	NEMA S1 FVNR COMBO, NEMA 3R	SR1-25,27,29	4, 5, 7
	EVAPORATIVE COOLER - HEATER	208/3PH			4000	11	1333	13.9		3#12, #12G	3/4"	NEMA S1 FVNR COMBO, NEMA 3R	SR1-31,33,35	4,5,7,9
	EVAPORATIVE COOLER - HEAT TRACE	120			200	1	200			2#12, #12G	3/4"	J-BOX	MP1-18	
CU-1	AIR COOLED CONDENSING UNIT	208/1PH					1248	12.0	20	2#12, #12G	3/4"	30A/2P/NF, NEMA 3R	MP2-7,9	1
ACU-1	AIR CONDITIONING UNIT	208/1PH								2#12, #12G	3/4"	NA		10
ACU-2	AIR CONDITIONING UNIT	208/3PH				38.1	4570	47.6	60	3#6, #10G	3/4"	60A/3P/NF	SR1-10,12,14	1
ACU-3	AIR CONDITIONING UNIT	208/3PH				36.8	4416	46.0	60	3#6, #10G	3/4"	60A/3P/NF	MDP:1,3,5	1
ACU-4	AIR CONDITIONING UNIT	208/3PH				38.1	4570	47.6	60	3#6, #10G	3/4"	60A/3P/NF	MDP:2,4,6	1
ERU-1	ENERGY RECOVERY UNIT	208/3PH	(1)3HP, (1)2HP	19.2		19.2	2306	20.2	32.5	3#10, #10G	3/4"	30A/3P/NF	MP2-11,13,15	1
UH-1	UNIT HEATER	208/3PH			20000	56	6667	60		3#4, #10G	3/4"	60A/3P/NF	MP2-17,19,21	1
UH-2	UNIT HEATER	208/1PH			3300	16	1650	20.0		2#12, #12G	3/4"	30A/2P/NF	MP2-23, 25	1
UH-3	UNIT HEATER	208/1PH			3300	16	1650	20.0		2#12, #12G	3/4"	30A/2P/NF	MP2-27, 29	1
UH-4	UNIT HEATER	208/1PH			3300	16	1650	20.0		2#12, #12G	3/4"	30A/2P/NF	MP2-31,33	1
CUH-1	CABINET UNIT HEATER	208/1PH			4500	22	1500	27.5		2#10, #10G	3/4"	INTEGRAL	MP2-35,37	
CUH-2	CABINET UNIT HEATER	208/1PH			4500	22	1500	27.5		2#10, #10G	3/4"	INTEGRAL	MP2-39,41	
EF-1	EXHAUST FAN	120	1/30		50	0.8	99	1.0		2#12, #12G	3/4"	MANUAL MOTOR STARTER	MP2-2 (PART)	1
EF-2	EXHAUST FAN	120	1/8		93	1.6	187	1.9		2#12, #12G	3/4"	MANUAL MOTOR STARTER	MP2-2 (PART)	1
EF-3	EXHAUST FAN	120	1/15		50	0.8	100	1.0		2#12, #12G	3/4"	MANUAL MOTOR STARTER	MP2-2 (PART)	1
EF-4	EXHAUST FAN	120	1/8		93	1.6	187	1.9		2#12, #12G	3/4"	MANUAL MOTOR STARTER	MP2-26	1
P-1	PUMP	208/3PH	2	7.5		7.5	900	9.4		3#12, #12G	3/4"	NEMA S1 FVNR COMBO		4, 5, 6,7
P-2	PUMP	208/3PH	2	7.5		7.5	900	9.4		3#12, #12G	3/4"	NEMA S1 FVNR COMBO		4, 5, 6,7
P-3	PUMP	120	1/5	5.1		5.1	612	6.4		2#12, #12G	3/4"	MANUAL MOTOR STARTER	MP2-8	1
P-4	PUMP	120	1/5	5.1		5.1	612	6.4		2#12, #12G	3/4"	MANUAL MOTOR STARTER	MP2-24	1
B-1	BOILER	120					500			2#12, #12G	3/4"	30A/1P/NF	MP2-10	1
B-2	BOILER	120					500			2#12, #12G	3/4"	30A/1P/NF	MP2-12	1
CBP	CHEMICAL BOOSTER PUMP	120					500			2#12, #12G	3/4"	5-20R-GFI	MP2-14	
GFP	GLYCOL FEED PUMP	120					500			2#12, #12G	3/4"	5-20R-GFI	MP2-16	
UVC-1	UVC LIGHT	120					100			2#12, #12G	3/4"	30A/1P/NF	MP2-18	1
HWRP-1	HOT WATER PUMP	120	1/15			0.8	99.5	1.0		2#12, #12G	3/4"	MANUAL MOTOR SWITCH	MP-1(PART)	
WH-1	WATER HEATER	120			100	1	100			2#12, #12G	3/4"	5-20R -GFI	MP-1(PART)	1
WH-2	WATER HEATER	120			1500	12.5	1500	15.6		2#12

LIGHT FIXTURE SCHEDULE (BASIS OF DESIGN)

TYPE	MANUFACTURER	CATALOG NUMBER	FIXTURE DESCRIPTION	LAMPS			CKT VOLTS	WATTS/ FIXTURE	VA/ FIXTURE	REMARKS / NOTES AND MOUNTING
				NO	WATTS	TYPE				
A	LITHONIA	2PM3N-GB328-18LD-120-GEB10PS	609mm x 1219mm [2'x4'] 18 CELL PARABOLIC	3	28	F28T8/SP41/IS/UMX/ECO	120	72	76	GRID, NOTE 1
AD	LITHONIA	2PM3N-GB332-18LD-120 WITH ELECTRONIC DIMMING BALLAST	609mm x 1219mm [2'x4'] 18 CELL PARABOLIC WITH DIMMING BALLAST	3	32	F32T8/SP41/ECO	120	92	97	GRID
AE	LITHONIA	2PM3N-GB328-18LD-120-GEB10PS-EL14	609mm x 1219mm [2'x4'] 18 CELL PARABOLIC WITH EMERGENCY BATTERY PACK	3	28	F28T8/SP41/IS/UMX/ECO	120	72	76	GRID, NOTE 1
B	LITHONIA	2PM3N-GB228-12LD-120-GEB10PS	609mm x 1219mm [2'x4'] 12 CELL PARABOLIC	2	28	F28T8/SP41/IS/UMX/ECO	120	49	52	GRID, NOTE 1
BE	LITHONIA	2PM3N-GB228-12LD-120-GEB10PS-EL14	609mm x 1219mm [2'x4'] 12 CELL PARABOLIC WITH EMERGENCY BATTERY PACK	2	28	F28T8/SP41/IS/UMX/ECO	120	49	52	GRID, NOTE 1
BD	LITHONIA	2PM3N-GB232-12LD-120 WITH ELECTRONIC DIMMING BALLAST	609mm x 1219mm [2'x4'] 12 CELL PARABOLIC, DIMMING BALLAST	2	32	F32T8/SP41/ECO	120	57	60	GRID
BDE	LITHONIA	2PM3N-GB232-12LD-120-EL14 WITH ELECTRONIC DIMMING BALLAST	609mm x 1219mm [2'x4'] 12 CELL PARABOLIC WITH EMERGENCY BATTERY PACK, DIMMING BALLAST	2	32	F32T8/SP41/ECO	120	57	60	GRID
E	LITHONIA	DMW-228-120-GEB10PS	ENCLOSED INDUSTRIAL	2	28	F28T8/SP41/IS/UMX/ECO	120	49	52	PENDANT MOUNTED AT 274cm [9'] A.F.F.
EE	LITHONIA	DMW-228-120-GEB10PS-EL14DW	ENCLOSED INDUSTRIAL WITH EMERGENCY BATTERY PACK	2	28	F28T8/SP41/IS/UMX/ECO	120	49	52	PENDANT MOUNTED AT 274cm [9'] A.F.F.
G	LITHONIA	2GTB-2-28-_-A12-120-GEB10PS	609mm x 1219mm [2'x4'] ACRYLIC LENS	2	28	F28T8/SP41/IS/UMX/ECO	120	49	52	RECESSED
GE	LITHONIA	2GTB-2-28-_-A12-120-GEB10PS-EL14	609mm x 1219mm [2'x4'] ACRYLIC LENS, WITH EMERGENCY BATTERY PACK	2	28	F28T8/SP41/IS/UMX/ECO	120	49	52	RECESSED
K	GOTHAM	AF-1/32TRT-6AR-_-120-PS	152mm [6"] DOWNLIGHT, SEMI-SPECULAR	1	32	F32TBX/SPX41/A/4P	120	36	38	RECESSED
KD	GOTHAM	AF-1/32TRT-6AR-_-120-DMHL	152mm [6"] DOWNLIGHT, SEMI-SPECULAR, DIMMING BALLAST	1	32	F32TBX/SPX41/A/4P	120	39	41	RECESSED
KE	GOTHAM	AF-1/32TRT-6AR-_-120-PS-EL14	152mm [6"] DOWNLIGHT, SEMI-SPECULAR, EMERGENCY BATTERY PACK	1	32	F32TBX/SPX41/A/4P	120	36	38	RECESSED
S	LITHONIA	WSQ-70S-WT-120-LPI	EXTERIOR WALL MOUNT, WIDE THROW, DARK BRONZE TEXTURED	1	70	LU70/MED	120	91	96	WALL 366cm [12'-0"] AFF
TE	LITHONIA	WSQ-150S-MD-120-2ELED-LP1	EXTERIOR WALL MOUNT, MEDIUM THROW, EMERGENCY LED SECONDARY SOURCE (TWO MODULES), BATTERY PACK, DARK BRONZE TEXTURED	1	150	LU150/MED	120	175	192	WALL 366cm [12'-0"] AFF
UE	HYDREL	4760-2/54T5HO-120-CNP-PDMW6-ELN-PLPKX-LP41K-DDB	EXTERIOR CANOPY - WET LOCATION WITH EMERGENCY BATTERY PACK, DARK BRONZE	2	54	F54W/T5/841/ECO	120	120	126	PENDANT MOUNTED, 152mm [6"] STEM, WITH -20°F MINIMUM STARTING TEMPERATURE
V	CANLET	G-F-W-F-26-N-1-G-GS	THERMOPLASTIC, VAPORTIGHT, GLOBE FIXTURE, GREY FINISH, GUARD, GLASS GLOBE	1	26	CFL, TRIPLE TUBE	120	29	31	WALL 274cm [9'-0"] AFF LOW TEMP BALLAST
XA	HUBBELL (DUAL-LITE)	#LED1EMRWW	LED EXIT SIGN (SINGLE FACE)	-	-	FURNISHED WITH UNIT	120	-	10	UNIVERSAL MOUNTED

BALLAST LEGEND

PS - PROGRAM START ELECTRONIC BALLAST
GEB10PS - ELECTRONIC BALLAST, <10% THD, PROGRAM START

KEYED NOTES

1. REFERENCE LIGHTING PLANS FOR FIXTURES REQUIRING DUAL-LEVEL SWITCHING BALLASTS. PROVIDE TANDEM WIRED BALLASTS FOR LIGHT FIXTURES REQUIRING DUAL-LEVEL SWITCHING.

leidos
LEIDOS
622 EMERSON ROAD, SUITE 600
St. Louis, MO. 63141
314-821-7017
www.leidos.com

MARK	REVISION	DATE
1	AS-BUILT RECORD DRAWINGS	05-12-14
0	TYPE B-3 FINAL SUBMITTAL	02-11-11

COORDINATION SIGNATURES

USER
BCE
FIRE
ENVIRO
SAFETY
SECURITY
COMM

ILLINOIS
AIR NATIONAL GUARD
ABRAHAM LINCOLN CAPITOL AIRPORT - SPRINGFIELD, IL

PROJECT TITLE: W9GDFY-09-D-0006 9G01 ADAL COMMUNICATIONS FACILITY, BLDG P-8
SUBMITTAL LEVEL: AS-BUILT RECORD DRAWINGS
SHEET TITLE: LIGHT FIXTURE SCHEDULE

DRAWN BY: AMF
APPROVED BY: TNK
BASE ENGINEER: LT. COL. CODERKO
DATE: 12 MAY 2014
PROJECT NO. (TWR NO.): DCFT052022

E-604

PLOT DATE: 5/12/2014 11:36:24 AM
FILE LOCATION: C:\6150930305 ADAL COMM P8\CAD\E\930305E-604.DWG
LAST SAVED BY: FINLEYAM