Exhibit 2 - Room 240

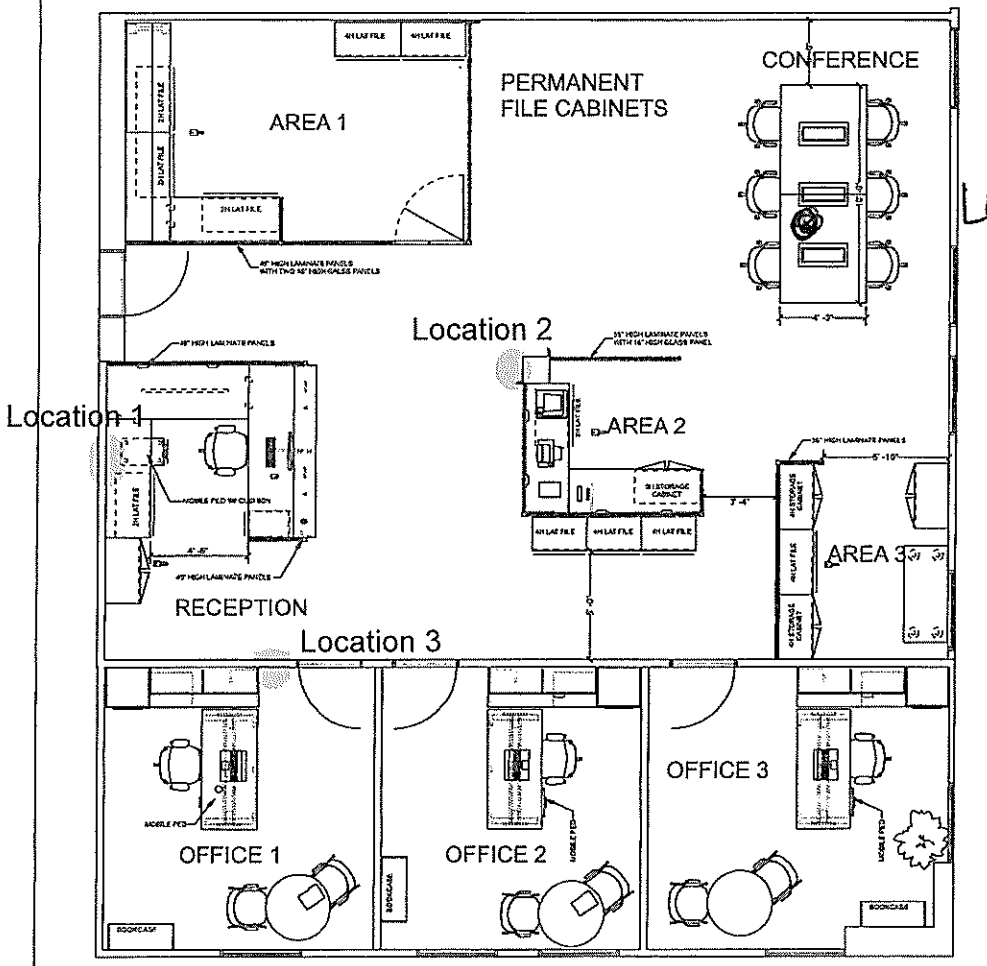

1 OVERALL FLOOR PLAN

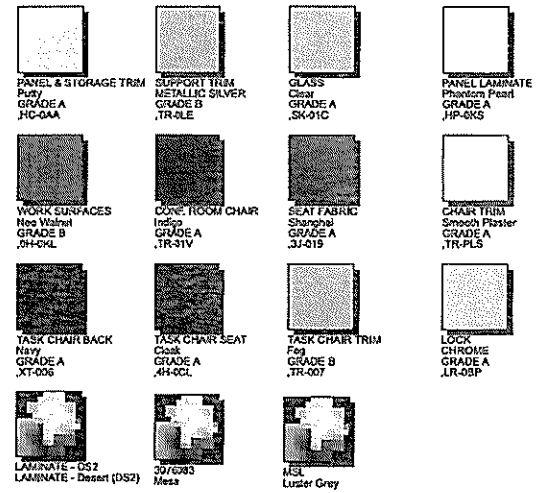

2 FINISHES

contract+associates
work+place solutions
New Mexico | Northern Arizona | El Paso
"We are as much about people as we are about furniture."

DESIGN DRAWING

COMPANY: BIA GALLUP

SITE ADDRESS:
301 W. HILL AVENUE, STE 210

PROJECT INFO:

PROJECT NAME:
BIA GALLUP OFFICE REDESIGN

PROJECT #: A8733

CONTACT: JEANETTE QUINTERO

SALES: LUCIANA

DESIGNER: EVELYN

DATE DRAWN: 11/2/2023

REVISIONS:

REV #	DATE	DETAIL
R1	-	-
R2	-	-
R3	-	-
R4	-	-
R5	-	-

CLIENT APPROVAL:

SIGNATURE

DATE

ALL DESIGN CONCEPTS INITIATED BY CONTRACT ASSOCIATES REPRESENTED BY THIS DRAWING ARE OWNED BY & PROPERTY OF CONTRACT ASSOCIATES. THIS DOCUMENT AND THE DESIGN CONCEPTS HEREIN CANNOT BE DISCLOSED OR USED BY OTHER PERSONS OR ENTITIES WITHOUT THE EXPRESS WRITTEN CONSENT OF THE OWNER. OWNERSHIP MAY BE TRANSFERRED UPON RECEIPT OF DESIGNATE DESIGN FEES.

COPYRIGHT © 2015 CONTRACT ASSOCIATES ALL RIGHTS RESERVED

Sheet #: 1/4

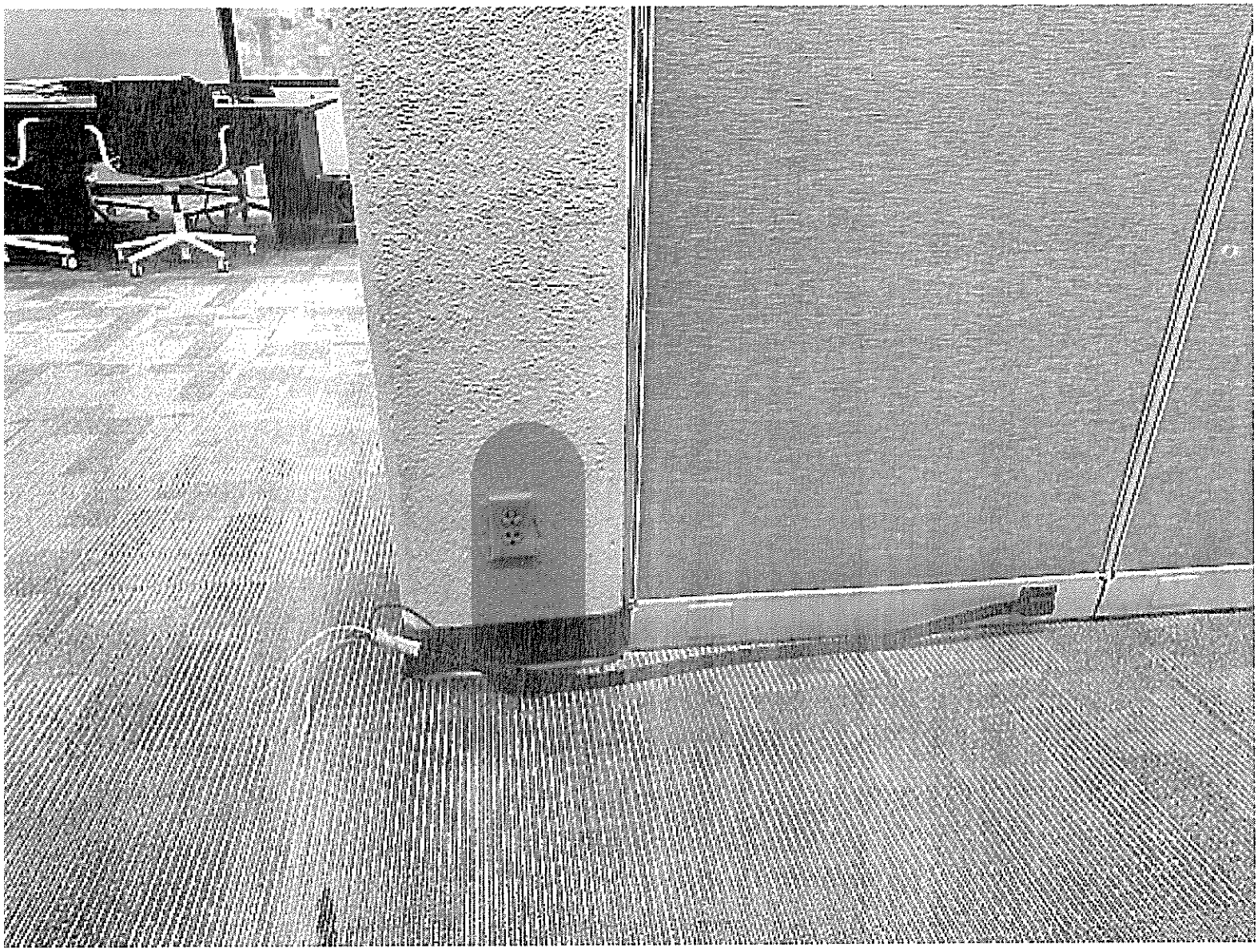

PLACES/UNIGROUP TOO®

3 & 4 Circuit Base Feed Module

Installation Instructions

Tools Required

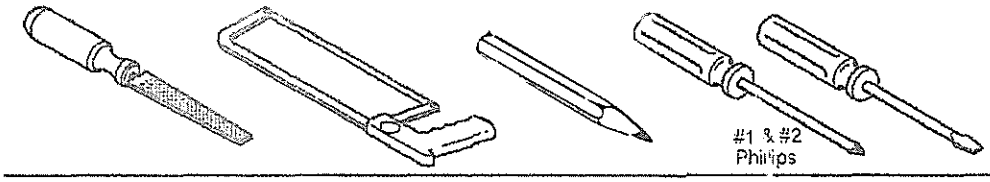

WARNING: Do not electrically interconnect modular power distribution systems powered from two different power feed units. This poses a SHOCK HAZARD to service personnel and will cause RISK OF FIRE due to excessive circulating currents.

WARNING: Power to all branch circuits MUST REMAIN DISCONNECTED during installation or removal of electrical components and raceway covers to avoid SHOCK HAZARDS.

NOTE: Connections of this modular power distribution component MUST be done by a licensed electrician, who must control the size and loading of each branch circuit. The person or group installing Haworth products is responsible for complying with all applicable building and electrical code requirements.

NOTE: Connectors are color coded and keyed to assure polarity.

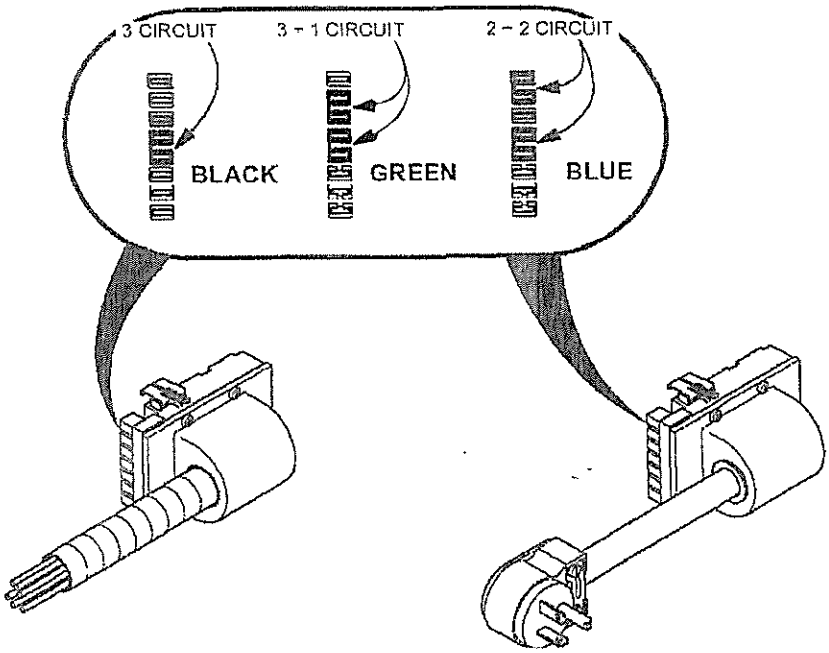

1 Slide access cover (A)

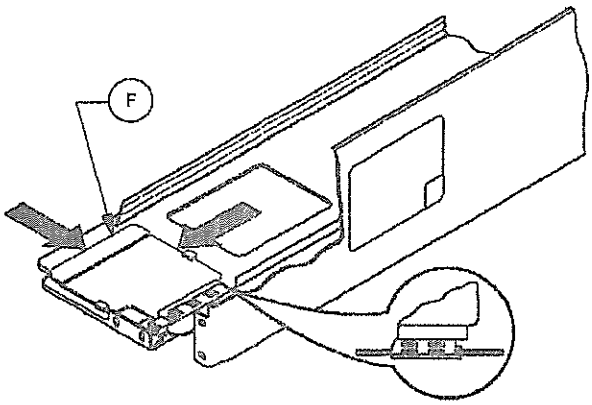

2 Route cord through raceway (B)

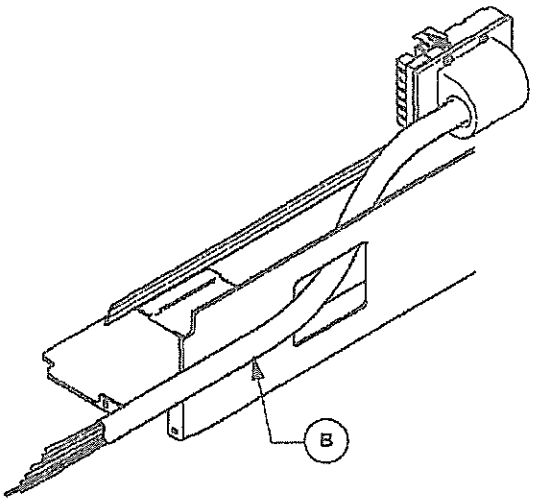

3 Plug base feed (B) into power block (C)

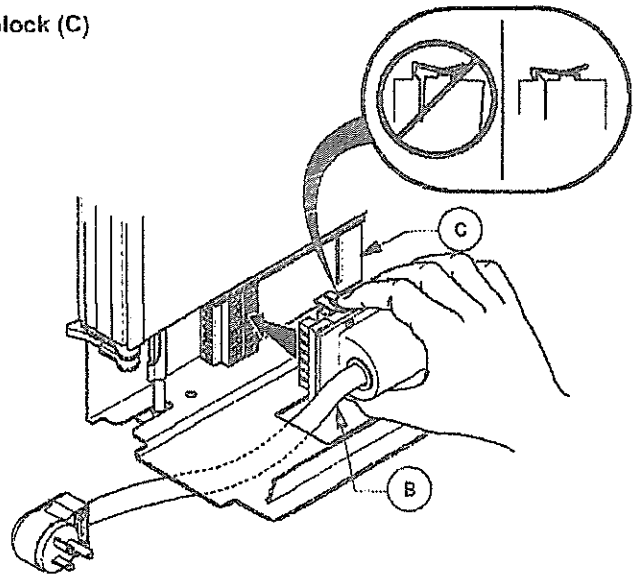

4 Close raceway cover (D)

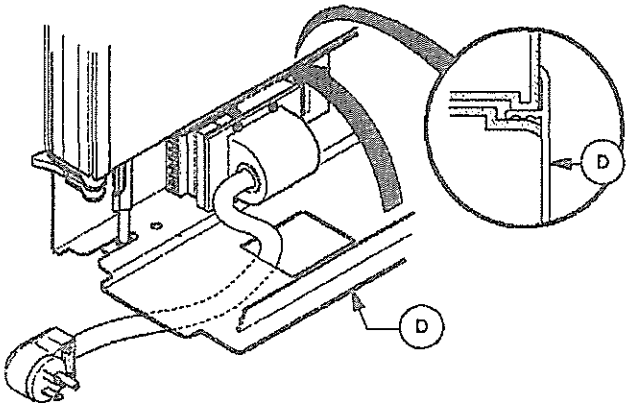

1 Slide access cover (A)

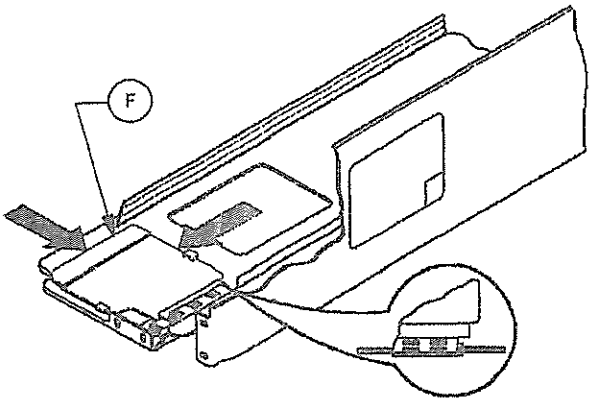

2 Route cord through raceway (B)

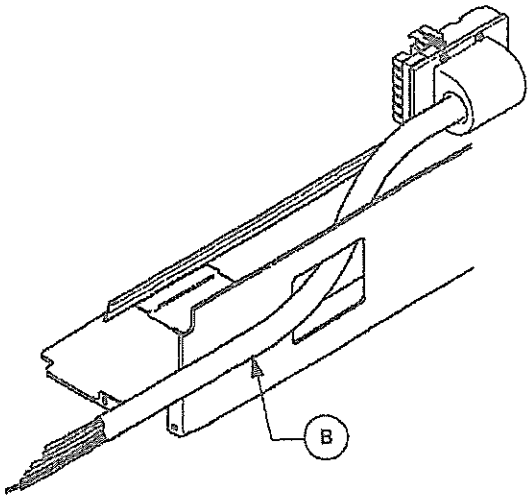

3 Plug base feed (B) into power block (C)

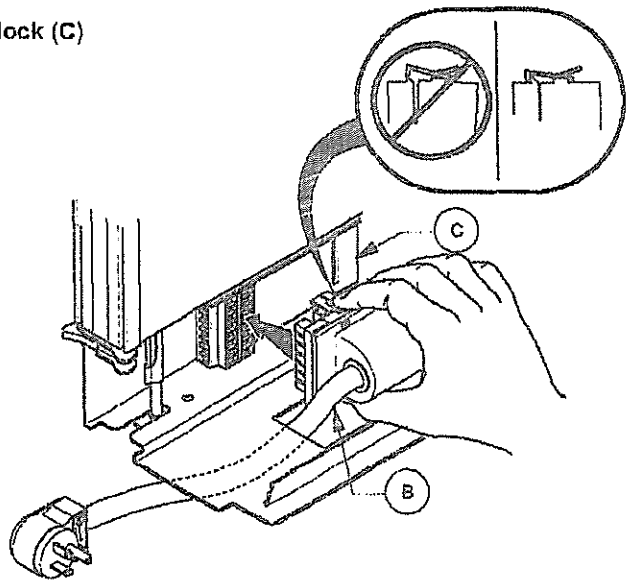

4 Close raceway cover (D)

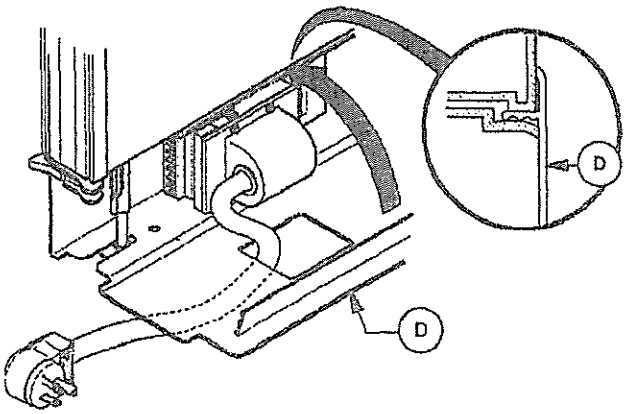

CUSTOMER SERVICE PHONE: 1-800-426-8562

Three-Circuit, Separate Neutrals

WIRING DIAGRAM

3 CIRCUIT		WIRE COLOR
N1	=	WHITE (12GA)
N2	=	WHITE RED (12GA)
N3	=	WHITE BLUE (12GA)
G1	=	BARE COPPER (12GA)
G2	=	GREEN YELLOW (12GA)
L1	=	BLACK (12GA)
L2	=	RED (12GA)
L3	=	BLUE (12GA)

Haworth Power Base components, are offered in three different wiring schematics to allow you to match your specific wiring strategy to any typical building wiring plan.

All the components in the electrical system must use the same wiring schematic.
The components are color coded and keyed to assure correct polarity.
Black = Three-circuit, separate neutrals
Green = Four-circuit, 3-1
Blue = Four-circuit, 2-2

In the three-circuit, separate neutral schematic, circuits 1 and 2 are distributed from two different phases from the first circuit panel. Each circuit is supported with its own neutral and a common ground. Circuit 3 is distributed from the second circuit panel and is supported by its own neutral and ground.

Three 208Y/120V Phase
Circuit Panel

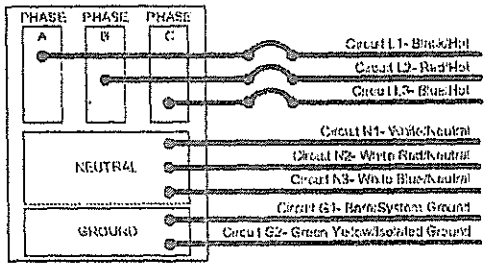

On a 3-phase circuit panel, circuits are distributed as shown.

Three Wire Single 120/240V Phase
Circuit Panel

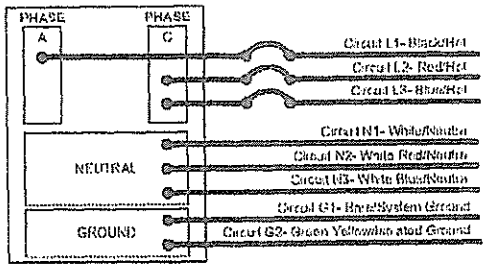

On a 3 wire single phase circuit panel, circuits are distributed as shown.

Four-Circuit, 3+1

4 CIRCUIT		WIRE COLOR
N1	=	GREY (10GA)
N2	=	GREY RED (10GA)
G2	=	GREEN YELLOW (12GA)
G1	=	BARE COPPER (12GA)
L1	=	BLACK (12GA)
L2	=	RED (12GA)
L3	=	BLUE (12GA)
L4	=	VIOLET (12GA)

In the four-circuit 3+1 schematic, Circuits 1, 2, and 3 are supported with one shared neutral. Circuit 4 is supported with a separate neutral.

Three 208Y/120V Phase
Circuit Panel

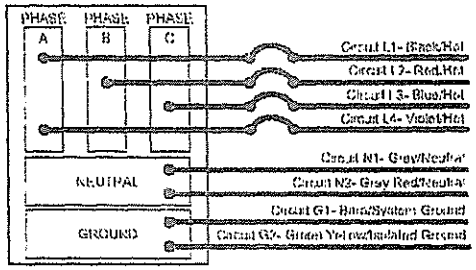

On a 3-phase circuit panel, circuits are distributed as shown.

Four-Circuit, 2+2

In the four-circuit, 2+2 schematic, circuits 1 and 2 are distributed from two different phases and are supported with one shared neutral. Circuits 3 and 4 are distributed from two different phases and supported by their own shared neutral.

Three 208Y/120V Phase
Circuit Panel

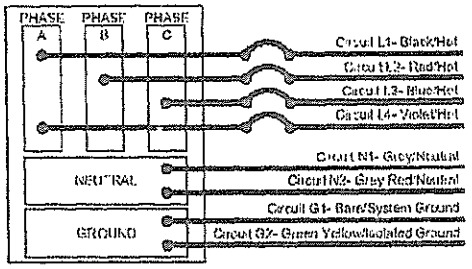

On a single 3-phase circuit panel, circuits are distributed as shown.

Three Wire Single 120/240V Phase
Circuit Panel

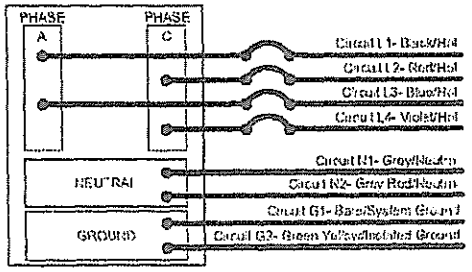

On a 3 wire single phase circuit panel, circuits are distributed as shown.

CUSTOMER SERVICE PHONE: 1-800-426-8562