SPECIAL PACKAGING INSTRUCTION

CODE ID	SPI NO (TPO)
98748	F 01-390-7448
	SHEET 1 OF 3

PART OR DRAWING NO.	NATIONAL STOCK NO.	CURR REV	
4082486	2840-01-390-7448 NZ	C	ILL P. BROWNING
ITEM NOMENCLATURE		ORIG DATE	PS T.C. JONES
DUCT, TURBINE		97001	CHK H. HOLINSWORTH
			AUTH C. TROTTER

PRESERVATION IAW MIL-STD-2073
SERVICEABLE METHOD: 10
UNSERVICEABLE METHOD: 10

QUP 001

ICQ N/A

CLEANING & DRYING IAW MIL-STD-2073

PRESERVATIVE N/A

MARKING IAW MIL-STD-129

SPECIAL MARKINGS:

A) SPI NO. F 01-390-7448
B) REUSABLE CONTAINER AND DUNNAGE DO NOT DESTROY.
C) NOT FOR OUTSIDE STORAGE.

CLOSURE

LEVEL A: N/A
LEVEL B: ASTM-D-1974

PACKING AS SPECIFIED BELOW AND BILL OF MATERIALS

LEVEL	SPEC	STYLE	TYPE	CL	VRTY	GR	TR
A	N/A	N/A	N/A	N/A	N/A	N/A	N/A
B	ASTM-D-5118	FTC	CF	WR	SW	W5C	N/A

	LEVEL A	LEVEL B
GROSS CU FT	N/A	2.56
GROSS WT LBS	N/A	26
DESIGN FRAGILITY G	N/A	100

CNTNR I.D.	LENGTH	WIDTH	DEPTH
LEVEL A:	N/A	N/A	N/A
LEVEL B:	29	29	4 1/2

CNTNR O.D.	LENGTH	WIDTH	DEPTH
LEVEL A:	N/A	N/A	N/A
LEVEL B:	30 1/8	30 1/8	4 7/8

ITEM DIM	26 1/4	26 1/4	3 3/4
ITEM WT LBS	20.7 LBS.		

REVISIONS		
LTR	DESCRIPTION	DATE
	NEW	97001
A	SUPERCEDES PREVIOUS DWG.	97076
B	REVISED & REDRAWN	03128
C	CHANGED CONTAINER STYLE & ADDED DIE CUT & TOP PAD	11224

PART NO.	QTY.	NOMENCLATURE OR DESCRIPTION	SIZE (INCHES UNLESS SPECIFIED) TOLERANCES ON FRAC. ± 1/8, DECIMAL ± .10, ANGLES ± 1°.	MATERIAL SPECIFICATION
4	1	TOP PAD	28 3/4 X 28 3/4 X 1/4	ASTM-D-4727, WR
3	1	WRAP	67 X 36	A-A-3174
2	1	BOTTOM DIE-CUT	28 3/4 X 28 3/4 X 1 1/4	ASTM-D-4727, WR
1	1	CONTAINER I.D.	29 X 29 X 4 1/2	SEE LEVEL OF PACK

SPECIAL PACKAGING INSTRUCTION	CODE ID 98748	SPI NO (TPO) F 01-390-7448
ITEM NOMENCLATURE DUCT, TURBINE		SHEET 2 OF 3

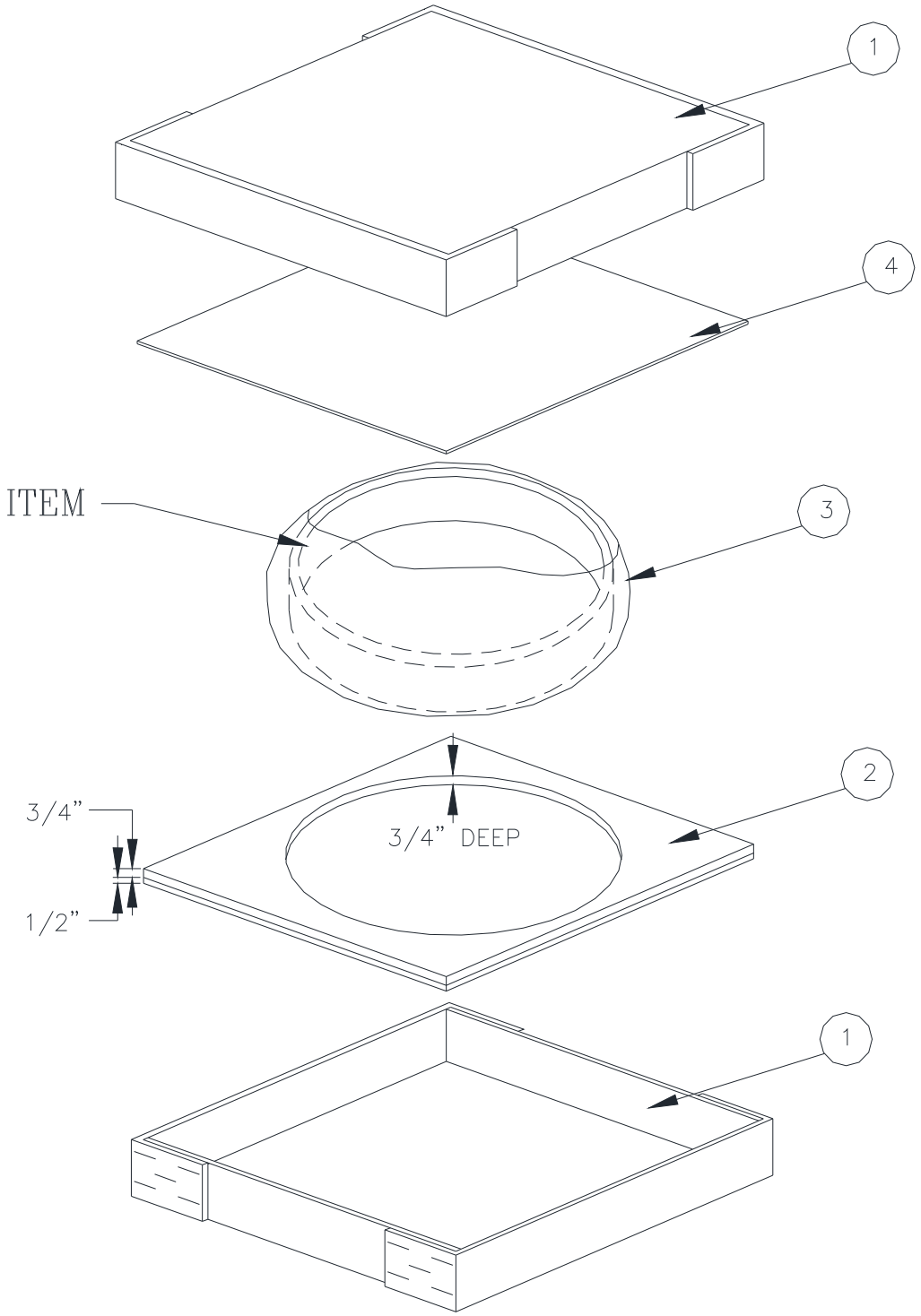

SPECIAL PACKAGING INSTRUCTION	CODE ID 98748	SPI NO (TPO) F 01-390-7448
ITEM NOMENCLATURE DUCT, TURBINE		SHEET 3 OF 3

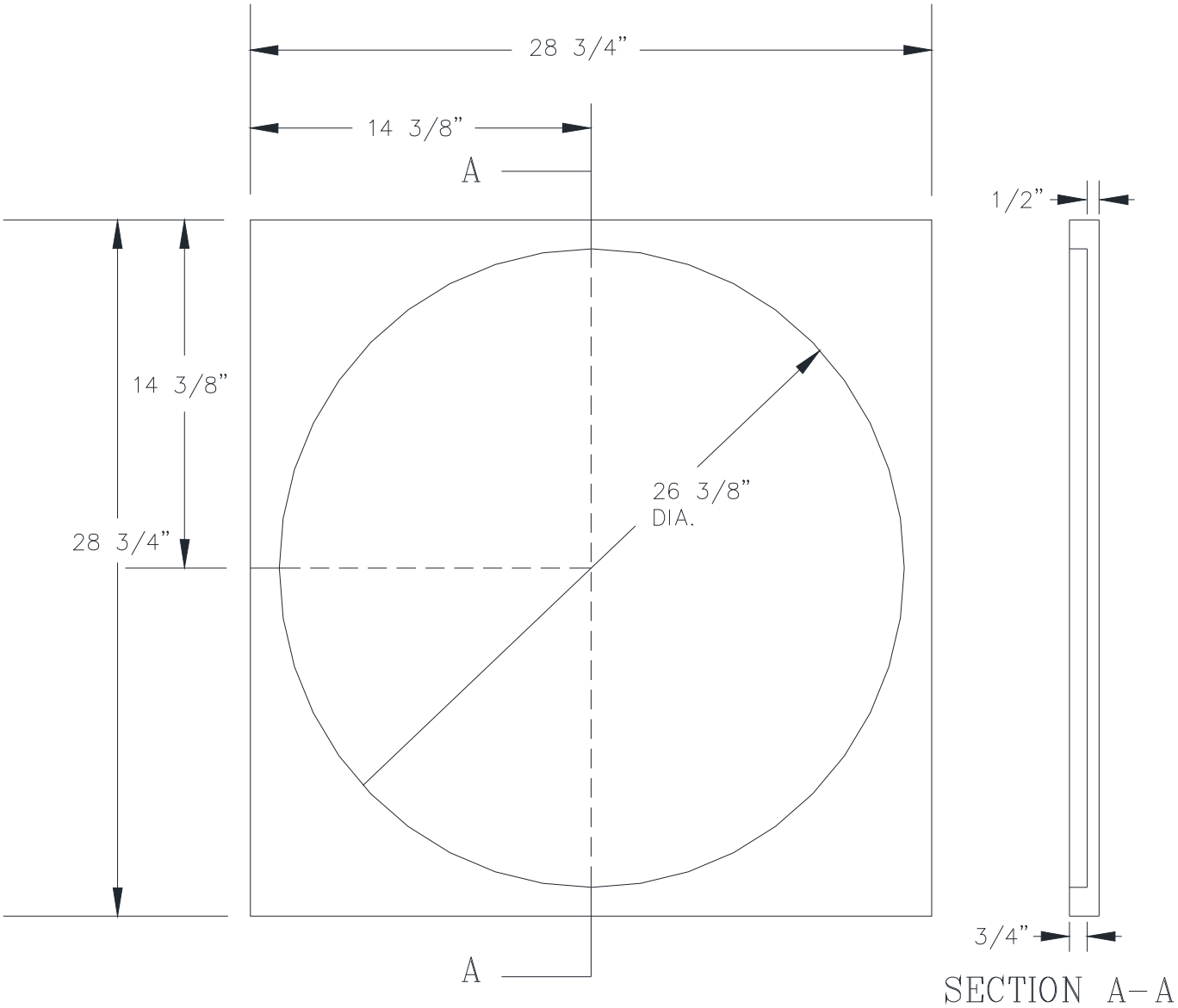

BOTTOM PAD (2)

DD form MAR 87 2169 MOD

COMPUTER GENERATED