26-0438
BB6
ROOF REPAIRS

COURTHOUSE BAY, CAMP LEJEUNE, N.C.

VICINITY MAP

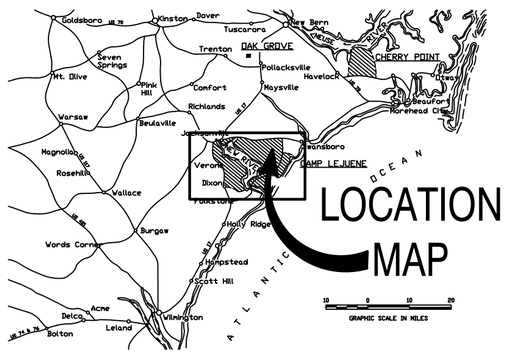

LOCATION MAP

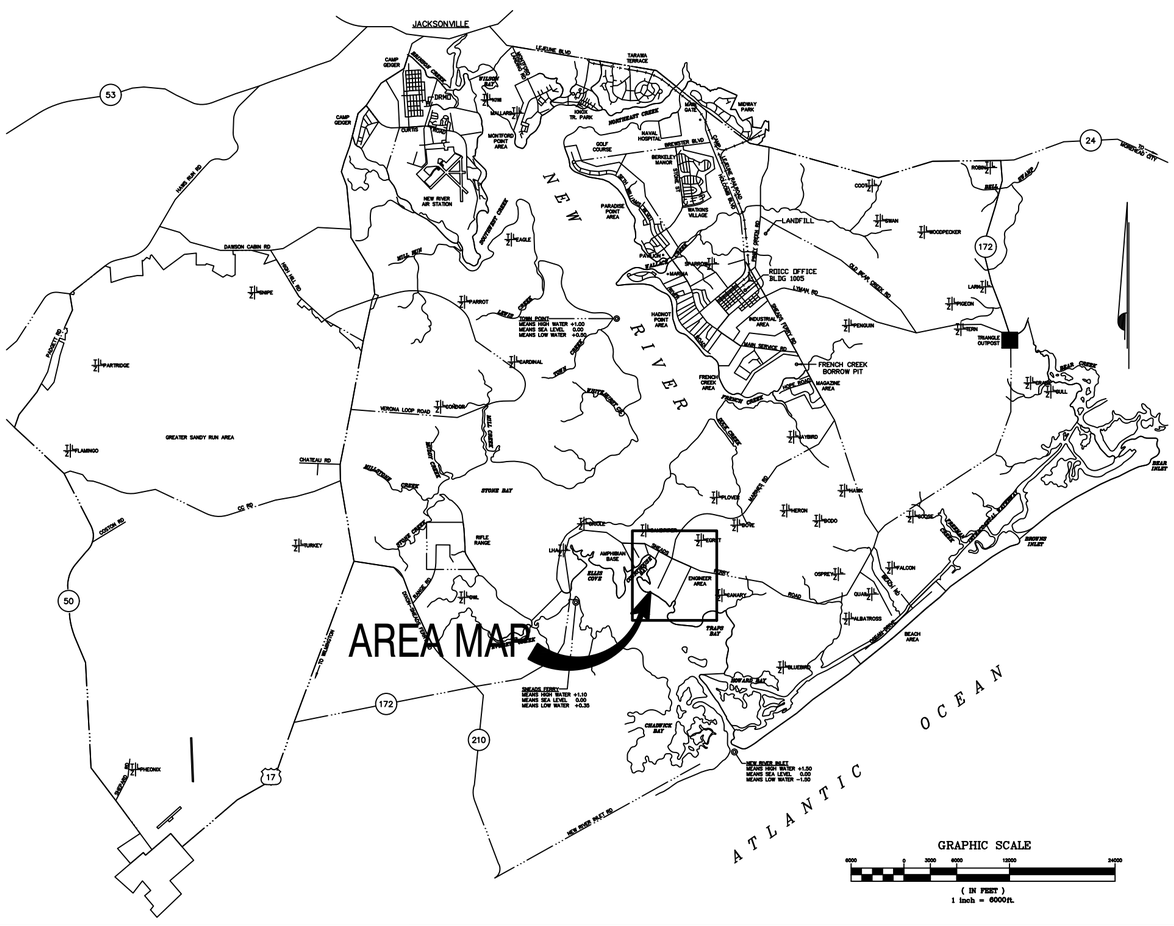

AREA MAP

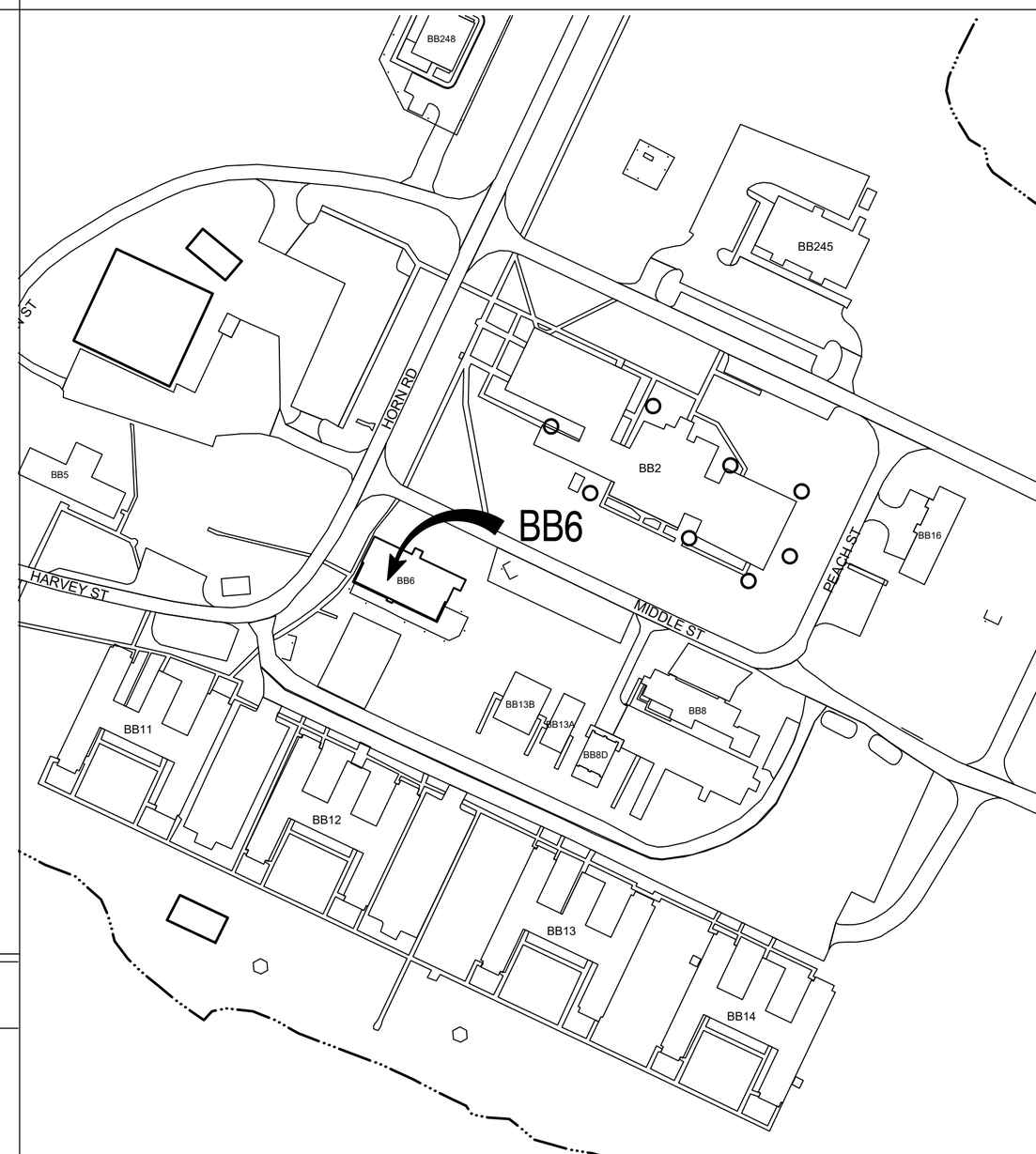

DRAWING INDEX

SHEET #	SHEET NAME		
T-1	TITLE SHEET, AREA MAPS	A4	DETAILS
A1	NOTES	A5	DETAILS
A2	DEMO PLAN		
A3	RENO PLAN		

BB6 ROOF REPAIRS
COURTHOUSE BAY, CAMP LEJEUNE, NC
USMC CAMP LEJEUNE

BB6 ROOF REPAIRS
26M096CN
SHEET 1 OF 6
DWG: MARK RAMSDELL
MACC PROJECT # 26-0438

T1

TITLE PAGE

BB6 ROOF REPAIRS:

SCOPE OF WORK: The contractor shall provide all material, labor, equipment and supervision required to accomplish the following.

GENERAL DESCRIPTION: This scope of work is to be accomplished at Building BB6 on Courthouse Bay aboard Camp Lejeune, North Carolina. The work includes removal of existing roofing and installation of SSMR roof and modified bituemn roofing on building.

DETAILED REQUIREMENTS AND SPECIFICATIONS: The contractor shall take his own field measurements in determining required materials and costs for the following.

SPECIAL SCHEDULING AND ACCESS: Access and scheduling to the work area shall be arranged through Contracting Officer"s Representative for the OICC office and the tenant of the building.

GENERAL NOTES/ENVIRONMENTAL NOTES:

1. TO ACCESS SITE CONTACT MCBL CONSTRUCTION MANAGER.
2. THESE DRAWINGS INDICATES GENERAL CONDITIONS WITH INFORMATION COMPILED FROM FIELD OBSERVATION. CONTRACTOR SHALL BE RESPONSIBLE FOR ACTUAL FIELD VERIFICATION PRIOR TO BIDDING, ORDERING MATERIALS AND DURING EVERY STEP OF CONSTRUCTION FOR EXISTING SURFACES, DIMENSIONS AND CONDITIONS. NUMBER OF ITEMS AND LOCATIONS SHOWN ARE APPROXIMATE, CONTRACTOR MUST VERIFY ALL CONDITIONS AND INCLUDE IN SCOPE OF WORK ACCORDINGLY.
3. CONSTRUCTION MATERIALS INDICATED ARE GENERAL IN NATURE AND ARE NOT INTENDED TO FULLY DESCRIBE THE EXISTING CONSTRUCTION PRESENT.
4. REPAIR AND REFINISH AREAS DAMAGED OR DISTURBED BY NEW WORK TO BE PROVIDED UNDER THIS CONTRACT.
5. DIMENSIONS PROVIDED ON EXISTING ITEMS ARE PROVIDED TO AID THE CONTRACTOR TO UNDERSTAND THE SCOPE OF WORK. FIELD VERIFY ALL CONDITIONS.
6. CLEAN ALL ITEMS AS NECESSARY TO RECEIVE NEW FINISHES. FILL ALL HOLES TO MATCH EXISTING CONDITIONS.
7. CONTRACTOR SHALL INSURE THAT THE BUILDING REMAINS WATERTIGHT THROUGH OUT THE CONSTRUCTION OPERATIONS AND AT THE END OF EACH DAY.
8. SUBMITTALS SHALL BE SUBMITTED TO THE CONTRACTING OFFICER CONTRACTING REPRESENTATIVE FOR APPROVAL.
9. REMOVE ALL DAMAGED OR LOOSE BUILDING COMPONENTS ASSOCIATED WITH THIS PROJECT, PATCH TO MATCH EXISTING, PREPARE TO RECEIVE NEW FINISHES.
10. METHOD OF REMOVAL OF ANY BUILDING COMPONENT SHALL BE APPROVED BY THE CO CONTRACTING REPRESENTATIVE. THE CONTRACTOR SHALL BE RESPONSIBLE FOR ENSURING THAT REMOVAL OF EXISTING COMPONENTS DOES NOT AFFECT ADJACENT OCCUPIED AREAS.
11. THIS AREA OF WORK IS LOCATED WITHIN RESTRICTED AREAS. ACCESS TO THIS AREA SHALL BE COORDINATED WITH THE CONTRACTING OFFICER.
12. THE NOTATION (TYP) INDICATES THAT THE CONDITION OCCURS IN MORE THAN ONE PLACE INCLUDING ALL SIMILAR CONDITIONS NOT INDIVIDUALLY NOTED.
13. COORDINATE STAGING AREA, SITE ACCESS, AND TOILET USE WITH THE CO CONTRACTING REPRESENTATIVE.
14. CONTRACTOR SHALL BE RESPONSIBLE FOR SITE SECURITY AND JOB SAFETY.
15. CONSTRUCTION ACTIVITIES SHALL BE IN ACCORDANCE WITH OSHA STANDARDS AND GOVERNMENT REQUIREMENTS.
16. AREAS OUTSIDE THE LIMITS OF PROPOSED WORK DISTURBED BY THE CONTRACTOR'S OPERATIONS SHALL BE RESTORED BY THE CONTRACTOR TO THEIR ORIGINAL CONDITION AT THE CONTRACTOR'S EXPENSE AS SO0N AS PRACTICABLE.
17. CONTRACTOR SHALL PREVENT DUST, SEDIMENT AND DEBRIS FROM EXITING THE CONSTRUCTION SITE AND SHALL BE RESPONSIBLE FOR CLEANUP, REPAIRS AND CORRECTIVE ACTION IF SUCH OCCURS. CONTRACTOR SHALL DISPOSE OF DEBRIS IN ACCORDANCE WITH APPLICABLE FEDERAL, STATE, AND LOCAL REGULATIONS, ORDINANCE AND STATUTES.
18. BURNING WILL NOT BE ALLOWED ON THE PROJECT SITE UNLESS AUTHORIZED IN WRITING BY THE CONTRACTING OFFICER.
19. CONTRACTOR IS RESPONSIBLE FOR PLACING BARRICADES USING FLAG MEN, FENCE, ETC AS NECESSARY TO INSURE SAFETY TO PUBLIC AND BUILDING OCCUPANTS.
20. CONTRACTOR'S PERSONNEL MUST WEAR IDENTIFICATION AT ALL TIMES.
21. ALL UTILITIES AND EXISTING FEATURES ARE TO BE FIELD VERIFIED PRIOR TO CONSTRUCTION. CONTRACTOR SHALL BE RESPONSIBLE FOR ANY DAMAGE TO EXISTING UTILITIES.
22. IF CONTAMINANTS ARE SUSPECTED THROUGH ODORS OR VISUAL ACTIVITIES, IMMEDIATELY STOP WORK. CALL 911 AND CONTACT EMD AT (910) 451-9017 FOR INSTRUCTIONS.
23. CONTRACTOR SHALL REVIEW ASBESTOS INSPECTION SURVEY BEFORE COMMENCING WORK.

GENERAL NOTES - ROOFING:

1. REFERENCE MANUFACTURER'S TECHNICAL SPECIFICATIONS FOR INSTALLATION INSTRUCTIONS.
2. UNLESS OTHERWISE NOTED, ALL ROOF PENETRATIONS AND PLUMBING VENTS CURRENTLY LOCATED ON THE ROOF ARE TO REMAIN IN PLACE SUBSEQUENT TO NEW ROOF INSTALLATION. REMOVE AND REPLACE ALL EXISTING FLASHING ELEMENTS AT ALL PENETRATIONS PRIOR TO NEW ROOFING SYSTEM INSTALLATION.
3. THE CONTRACTOR SHALL COORDINATE ALL UTILITY CONNECTIONS (PLUMBING, ELECTRICAL, HVAC, ETC.) WITH DEMOLITION AND RENOVATION PHASING. COORDINATE ALL SHUTDOWNS AND/OR MODIFICATIONS OF EXISTING SYSTEMS WITH THE CONSTRUCTION MANAGER.
4. THE CONTRACTOR SHALL DE-ENERGIZE ALL ELECTRIC CIRCUITS PRIOR TO DEMOLITION OF AFFECTED EQUIPMENT, RE-CONNECT, AND RE-ENERGIZE ALL AFFECTED EQUIPMENT AND ELECTRICAL DEVICES AS NECESSARY TO RETURN THEM TO WORKING CONDITIONS.
5. FOR BIDDING PURPOSES, THE ROOFING CONTRACTOR SHALL INCLUDE IN THEIR BID THE REPLACEMENT OF A MINIMUM OF 25% OF THE EXISTING PLYWOOD WOOD DECK SUBSTRATE. THE NEW SUBSTRATE MUST MATCH EXISTING CONDITIONS (WOOD TYPE, WIDTH AND THICKNESS) AND MAINTAIN A SMOOTH AND EVEN TRANSITION.
6. PROPERLY REMOVE, HAUL AND DISPOSE OF ALL DEBRIS. THE CONTRACTOR SHALL NOT UTILIZE THE DUMPSTER PROVIDED BY CAMP LEJEUNE FOR THE OCCUPANTS OF THE BUILDINGS.
7. THE CONTRACTORS MAY ONLY USE THE CAMP LEJEUNE LANDFILL FOR THE DISPOSAL OF ASBESTOS CONTAINING MATERIALS AND BUILDING PRODUCTS WITH TIGHTLY ADHERED LEAD CONTAINING PAINT. THE HOURS OF OPERATION ARE 0730-1530. DELIVERY OF ACCEPTABLE MATERIALS (LEAD AND ASBESTOS) SHALL BE BY APPOINTMENT ONLY. APPOINTMENTS MADE BY PHONE AT 910-451-5011 OR 910-451-2946.
8. NON-CONTAMINATED MATERIALS: ALL OTHER CONTRACTOR GENERATED MATERIAL SHALL BE WEIGHED THROUGH THE BASE LANDFILL SCALES BEFORE BEING REMOVED FROM THE BASE. CONTRACTORS UTILIZING THE BASE SCALES WILL REQUIRE CONTRACTING OFFICER ASSISTED PRE-REGISTRATION WITH THE LANDFILL MANAGER. THE CONTRACTING OFFICER WILL REGISTER THE CONTRACT VIA E-MAIL, WITH THE BASE LANDFILL. ALL HAUL VEHICLES WILL MAINTAIN A SECURE VEHICLE PLACARD AS A CONDITION TO UTILIZE THE SCALE. E-MAIL THE CONTRACT INFORMATION TO THE LANDFILL CLERK, INCLUDING THE NAME ON THE PRIME CONTRACTOR, CONTRACT NUMBER, JOB NAME/DESCRIPTION, COMPLETION DATE AND WHETHER OR NOT ANY OF THE ABOVE MATERIALS WILL BE DELIVERED TO THE LANDFILL. HAULING AND OFF-BASE LANDFILL COSTS SHALL BE INCLUDED IN THE CONTRACT.
9. TELECOMMUNICATION RISER REDESTALS ARE WITHIN 50FT OF EACH BUILDING. PRESERVE AND PROTECT PEDESTALS. ANY DAMAGE OCCURING TO THEM DUE TO CONSTRUCTION TO BE REPAIRED AT THE COST OF CONTRACTOR.

HAZARDOUS MATERIALS:

1. CAMP LEJEUNE ASBESTOS PROGRAM MANAGER IS KEN HENSLEY, 910-451-7018.
2. THE CONTRACTOR MUST SURVEY THE EXISTING CONDITIONS AFFECTED BY THIS PROJECT. IF ASBESTOS MATERIALS ARE FOUND THE CONTRACTOR MUST ABATE ALL SUCH MATERIALS.

UFC CRITERIA:

INCLUDING BUT NOT LIMITED TO THE FOLLOWING:

1. UFC 1-200-01 DOD, GENERAL BUILDING REQUIREMENTS.
2. UFC 4-010-01 D0D, MINIMUM ANTITERRORISM STANDARDS FOR BUILDINGS.
3. INTERNATIONAL BUILDING CODE (IBC).
4. LIFE SAFETY CODE, NATIONAL FIRE PROTECTION ASSOCIATION (NFPA 101)
5. ARCHITECTURAL BARRIERS ACT (ABA).
6. AMERICANS WITH DISABILITIES ACT (ADA).
7. ICC/ANSI A117.1.
8. ALL APPLICABLE DESIGN CRITERIA (DOD).
9. NFPA 10 PORTABLE FIRE EXTINGUISHERS.
10. NFPA 72 FIRE ALARM AND SIGNALING CODE.
11. NFPA FIRE DOORS AND OTHER OPENINGS PROTECTIVES.

MISCELLANEOUS INFORMATION:

1. FACILITY ACCESS AND SCHEDULING TO THE WORK AREA SHALL BE ARRANGED THRU THE CONTRACTING OFFICER'S REPRESENTATIVE FOR THE ROICC'S OFFICE. THE CONTRACTOR SHALL NOT CONTACT THE FACILITY REPRESENTATIVE DIRECTLY UNDER ANY CIRCUMSTANCES. ALL COORDINATION SHALL BE DONE WITH THE CONSTRUCTION MANAGER ONLY.
2. THIS FACILITY IS OPERATIONAL ALL YEAR ROUND DURING ALL HOURS. CONTRACTOR SHALL NOT DISRUPT THE BUILDING FUNCTIONS UNLESS COORDINATED WITH AND AGREED WITH THE FACILITY MANAGER.
3. IF THE CONTRACTOR IS UNABLE TO COMPLETE CERTAIN CONSTRUCTION ASPECTS WITHOUT AFFECTING THE BUILDING OPERATION, THE CONTRACTOR SHALL REQUEST PERMISSION TO SCHEDULE ANY SHUTDOWN TEN (10) WORKING DAYS PRIOR TO THE COMMENCEMENT OF ANY CONSTRUCTION ACTIVITY. COORDINATE WITH THE CONSTRUCTION MANAGER.
4. ANY ITEM SCHEDULED TO BE REMOVED, PROTECTED AND RE-INSTALLED, CONTRACTOR SHALL NOTIFY C.O. IMMEDIATELY IF DAMAGED.

DEMO NOTES

01	STAGING: COORDINATE LOCATION WITH CO
02	DEMOLISH ALL ITEMS FROM THE ROOFING MEMBRANE TO THE TOP OF ROOF SHEATHING. DO NOT DISTURB SHEATHING. REPLACE ANY DAMAGED SHEATHING WITH NEW $\frac{3}{4}$" CDX PLYWOOD. ASSUME 25% SHEATHING TO BE REPLACED.
03	DEMOLISH ALL SHINGLE ROOF, CAP, FLASHING AND FASCIA TO THE TOP OF SHEATHING. REPLACE ANY DAMAGED SHEATHING WITH NEW $\frac{3}{4}$" CDX PLYWOOD. ASSUME 25% SHEATHING TO BE REPLACED. DEMOLISH EXISTING FASCIA, SOFFIT AND VENTED DRIP SCREEN.
04	VENT: TO REMAIN, DO NOT DISTURB. REMOVE AND DISCARD BOOT FLASHING AND ROOFING COMPONENTS.
05	MECHANICAL UNIT ON CURB: TO REMAIN OPERATIONAL AT ALL TIMES. DO NOT DISTURB, PROTECT AS NECESSARY. REMOVE AND DISCARD ALL FLASHING MATERIAL AND ROOFING MATERIAL WITHOUT AFFECTING THE EQUIPMENT OPERATION. REMOVE ALL CONDENSATE LINES AND PREPARE FOR INSTALLATION OF NEW TRAP PER DETAILS.

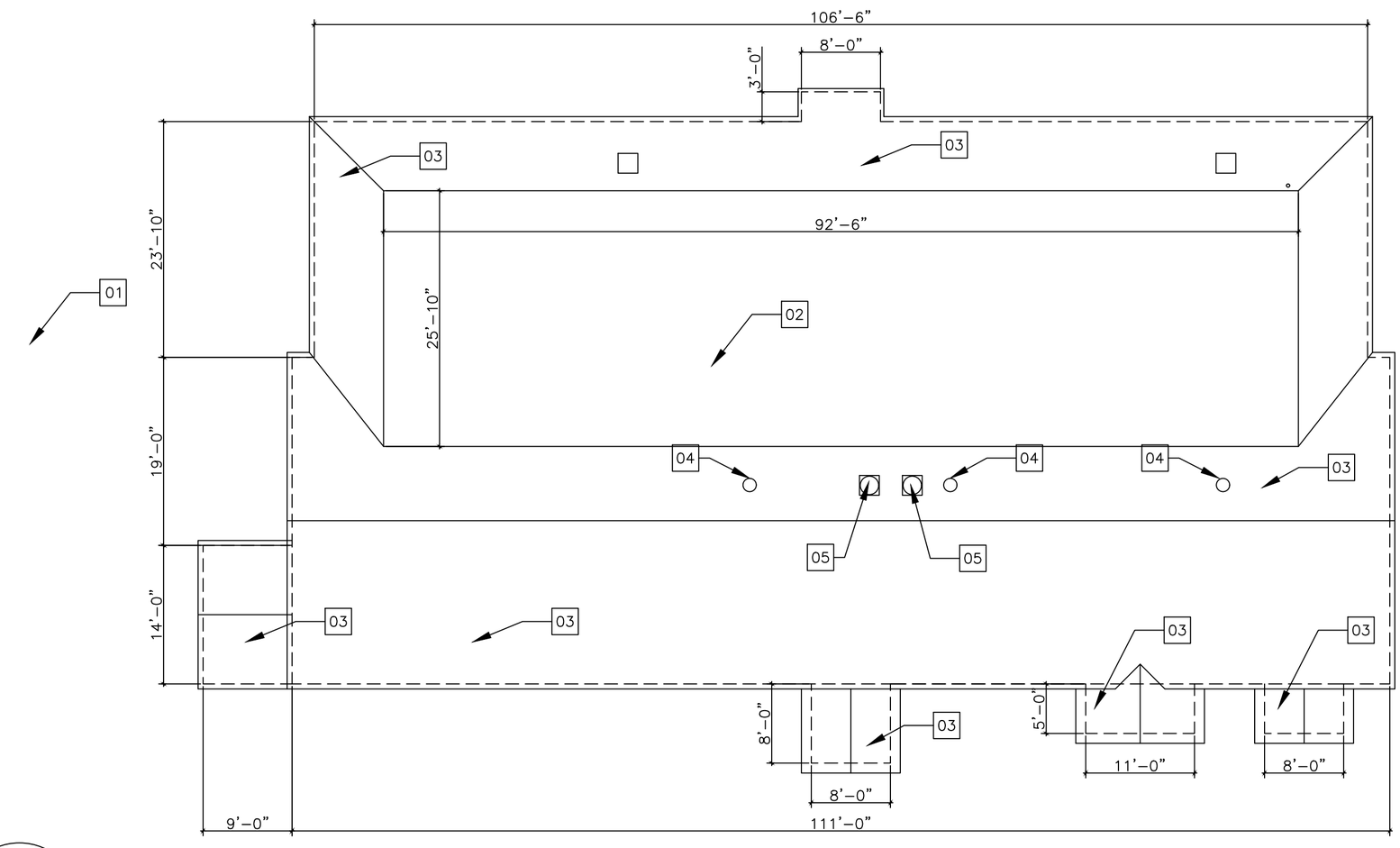

1 / A2 DEMO PLAN

3/32" = 1'-0"

0 5' 10' 20' 30'

BB6 ROOF REPAIRS
COURTHOUSE BAY, CAMP LEJEUNE, NC
USMC CAMP LEJEUNE

BB6 ROOF REPAIRS
26M096CN

SHEET 3 OF 6

DWG: MARK RAMSDELL

MACC PROJECT # 26-0438

A2

DEMO PLAN

RENO NOTES

01	STAGING: COORDINATE LOCATION WITH CO
02	DEMOLISH ALL ITEMS FROM THE ROOFING MEMBRANE TO THE TOP OF ROOF SHEATHING. DO NOT DISTURB SHEATHING. REPLACE ANY DAMAGED SHEATHING WITH NEW $\frac{3}{4}$" CDX PLYWOOD. ASSUME 25% SHEATHING TO BE REPLACED.
03	DEMOLISH ALL SHINGLE ROOF, CAP, FLASHING AND FASCIA TO THE TOP OF SHEATHING. REPLACE ANY DAMAGED SHEATHING WITH NEW $\frac{3}{4}$" CDX PLYWOOD. ASSUME 25% SHEATHING TO BE REPLACED. DEMOLISH EXISTING SOFFIT AND VENTED DRIP SCREEN.
04	VENT: TO REMAIN, DO NOT DISTURB. INSTALL NEW FLASHING PER SPECS AND DETAILS
05	MECHANICAL UNIT ON CURB: TO REMAIN OPERATIONAL AT ALL TIMES. DO NOT DISTURB, PROTECT AS NECESSARY. REMOVE AND DISCARD ALL FLASHING MATERIAL AND ROOFING MATERIAL WITHOUT AFFECTING THE EQUIPMENT OPERATION. REMOVE ALL CONDENSATE LINES AND PREPARE FOR INSTALLATION OF NEW TRAP PER DETAILS.
06	NEW ROOF TO WALL FLASHING. SEE DETAIL.

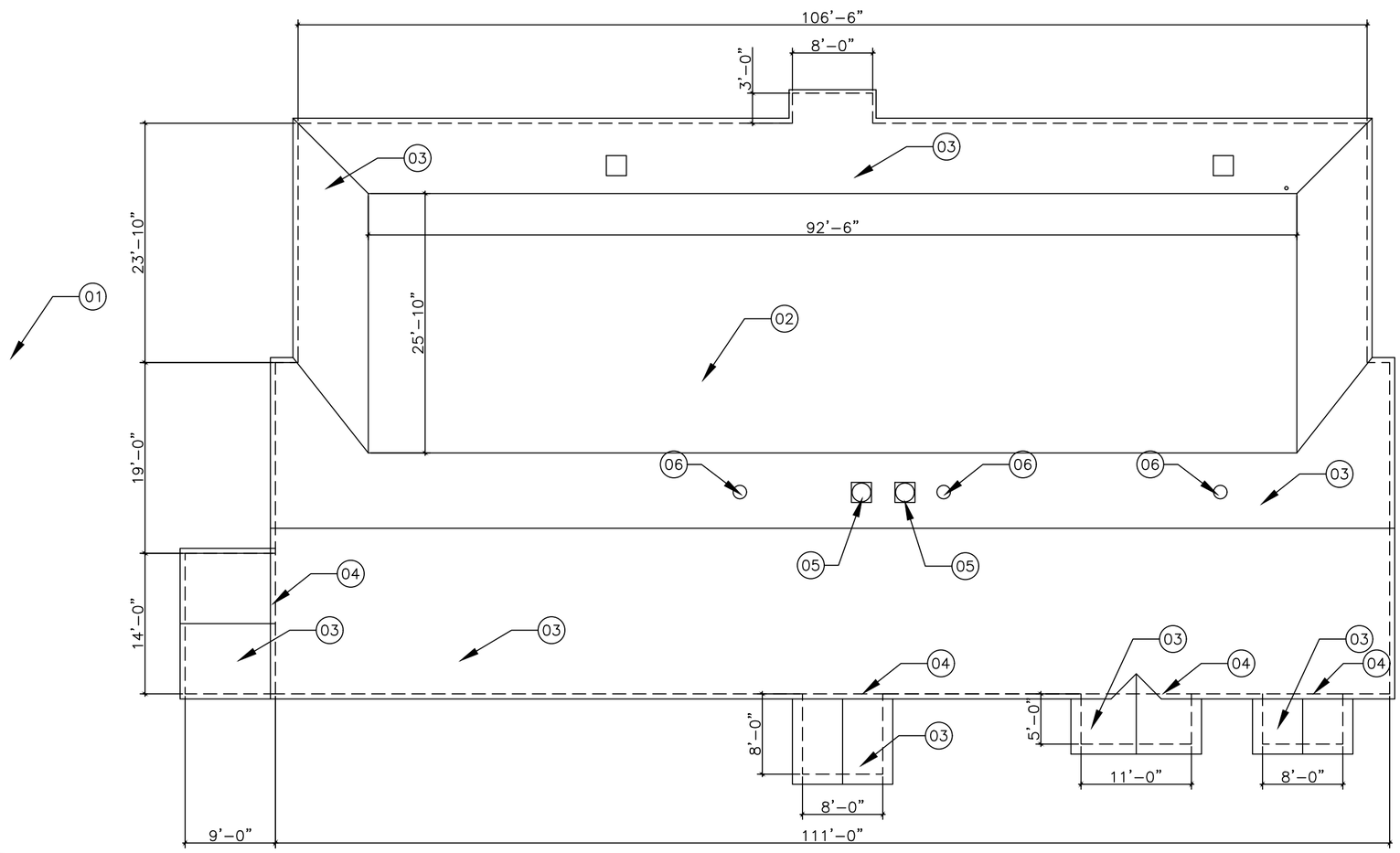

1 / A3 RENO PLAN

3/32" = 1'-0"

0 5' 10' 20' 30'

BB6 ROOF REPAIRS
COURTHOUSE BAY, CAMP LEJEUNE, NC
USMC CAMP LEJEUNE

BB6 ROOF REPAIRS
26M096CN
DWG: MARK RAMSDELL

SHEET 4 OF 6

MACC PROJECT # 26-0438

A3

RENO PLAN

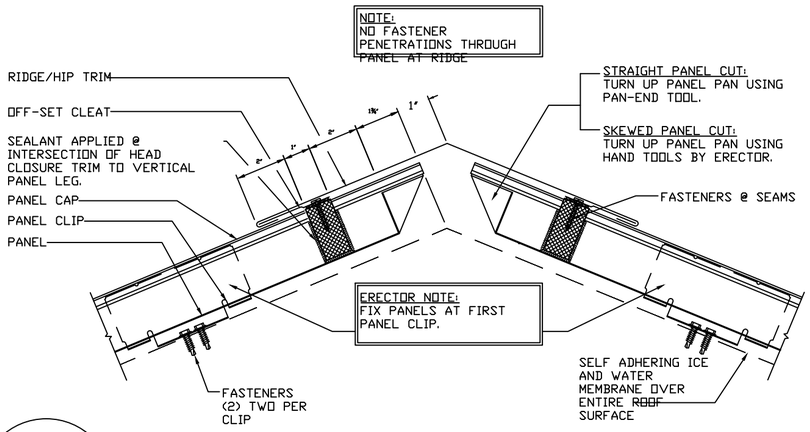

1 / A4 FIXED RIDGE/HIP DETAIL

NOT TO SCALE

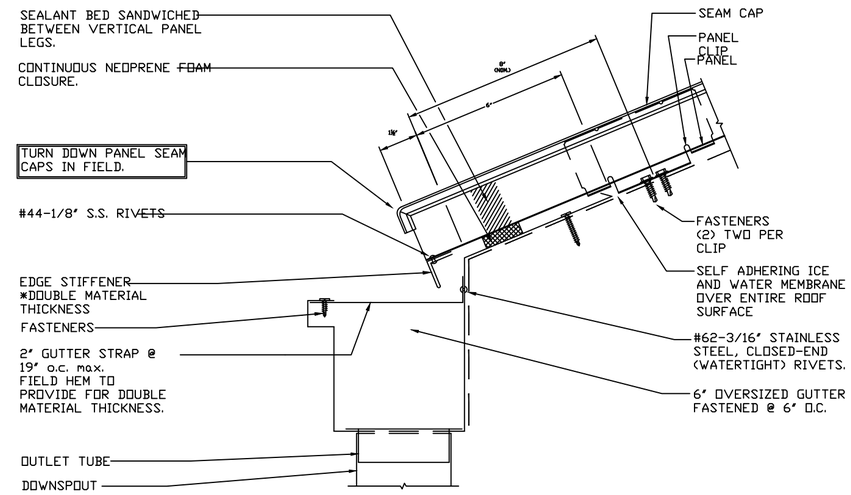

2 / A4 EAVE W/ GUTTER DETAIL

NOT TO SCALE

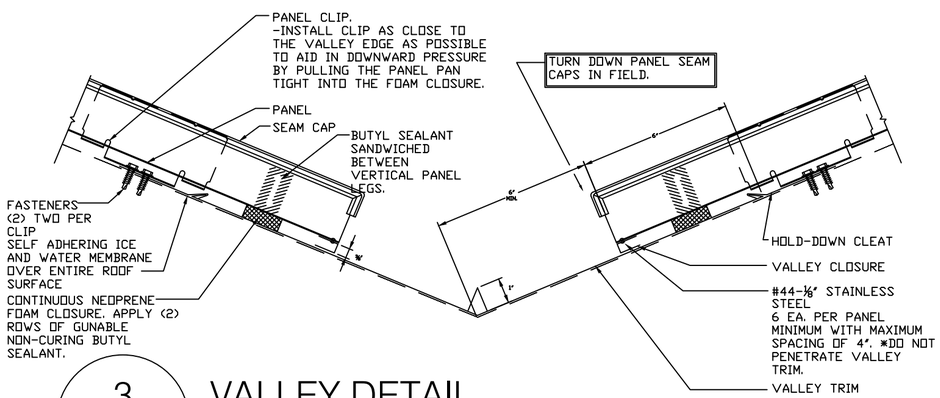

3 / A4 VALLEY DETAIL

NOT TO SCALE

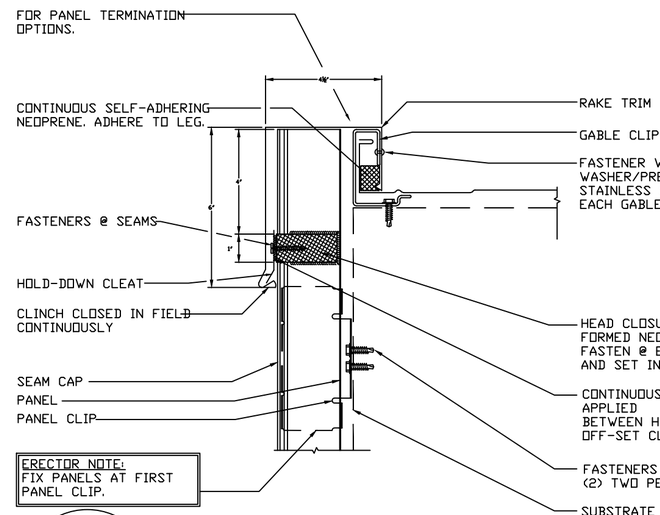

4 / A4 RAKE W/ VERTICAL PANEL DETAIL

NOT TO SCALE

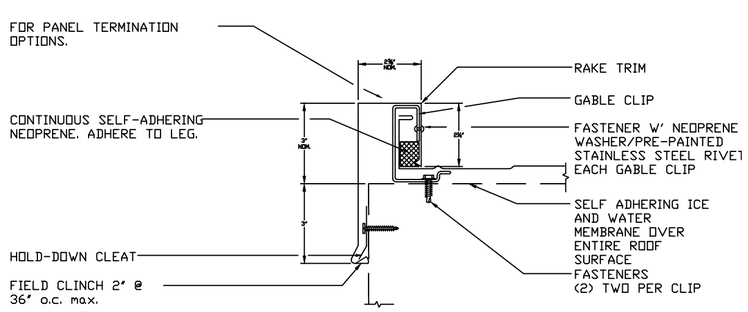

5 / A4 RAKE DETAIL

NOT TO SCALE

BB6 ROOF REPAIRS
26M096CN
SHEET 5 OF 6

DWG: MARK RAMSDELL

MACC PROJECT # 26-0438

BB6 ROOF REPAIRS
COURTHOUSE BAY, CAMP LEJEUNE, NC

USMC CAMP LEJEUNE

A4

DETAILS

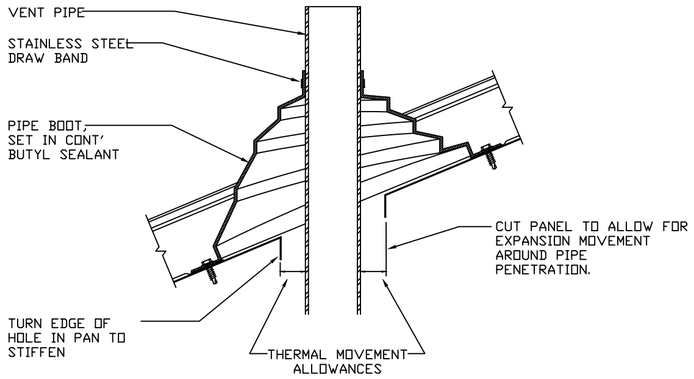

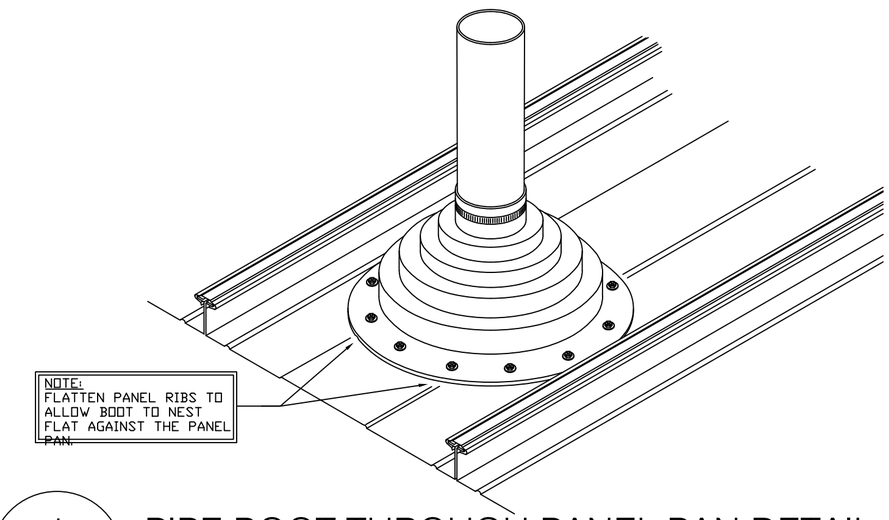

1 / A5 PIPE BOOT THROUGH PANEL PAN DETAIL

NOT TO SCALE

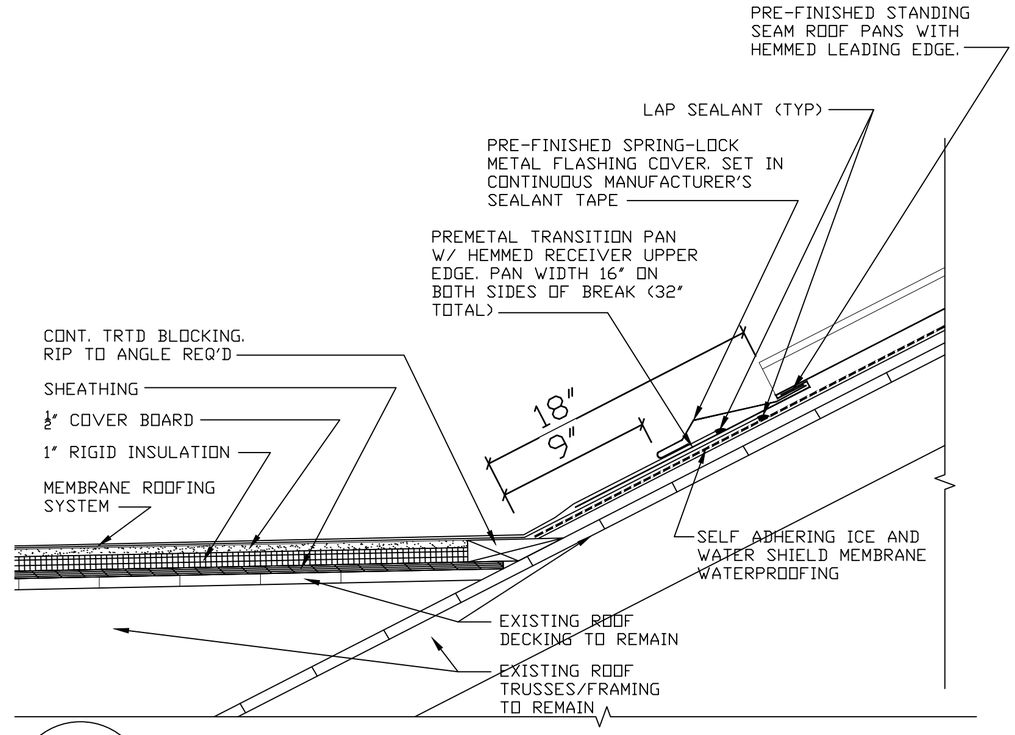

2 / A5 TRANSITION DETAIL

NOT TO SCALE

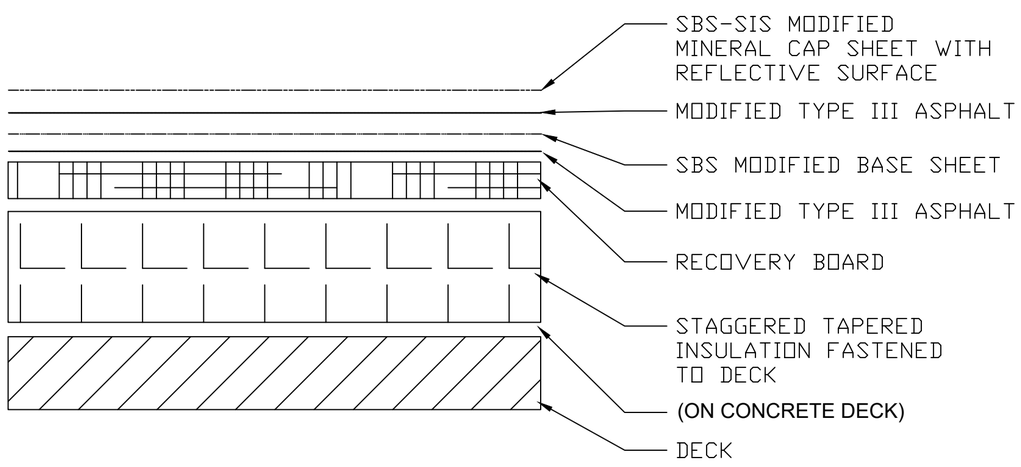

3 / A5 TYPICAL MOD. BIT. ROOF DETAIL

N.T.S.

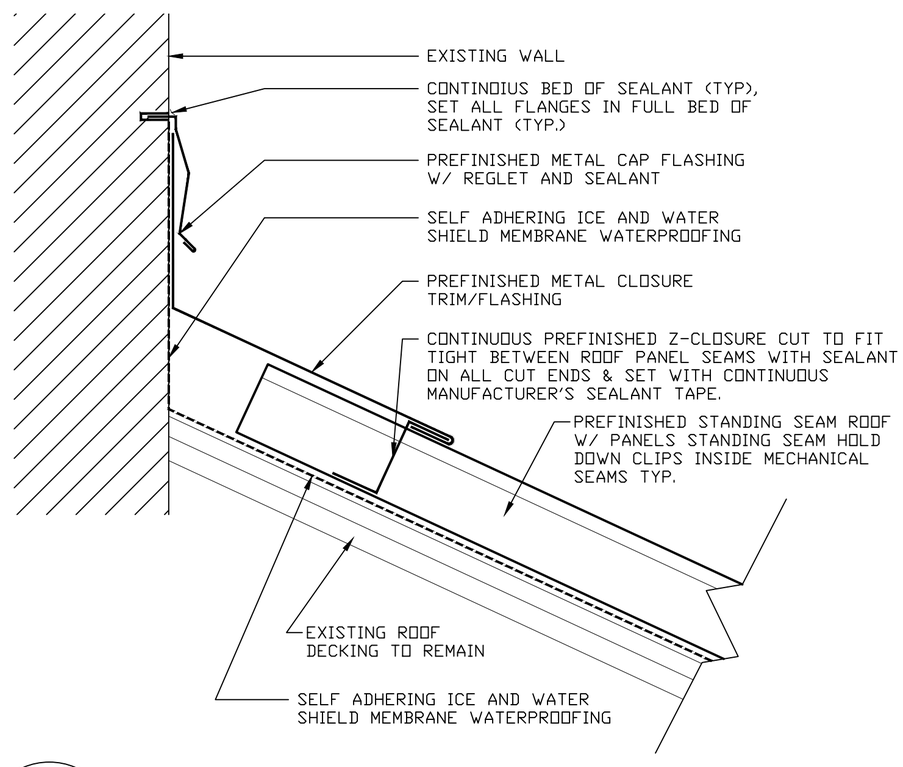

4 / A5 FLASHING DETAIL AT WALL

NOT TO SCALE

BB6 ROOF REPAIRS
COURTHOUSE BAY, CAMP LEJEUNE, NC
USMC CAMP LEJEUNE

BB6 ROOF REPAIRS
26M096CN
DWG: MARK RAMSDELL

SHEET 6 OF 6

MACC PROJECT # 26-0438

A5

DETAILS