Attachment 2 - MAHG261006

KEESLER AIR FORCE BASE BILOXI, MS

EXTEND PERIMETER FENCE AT DIVISION ST. GATE

PROJECT NUMBER: MAHG261006

ISSUE DATE: JUNE, 2026

PROJECT LOCATION:

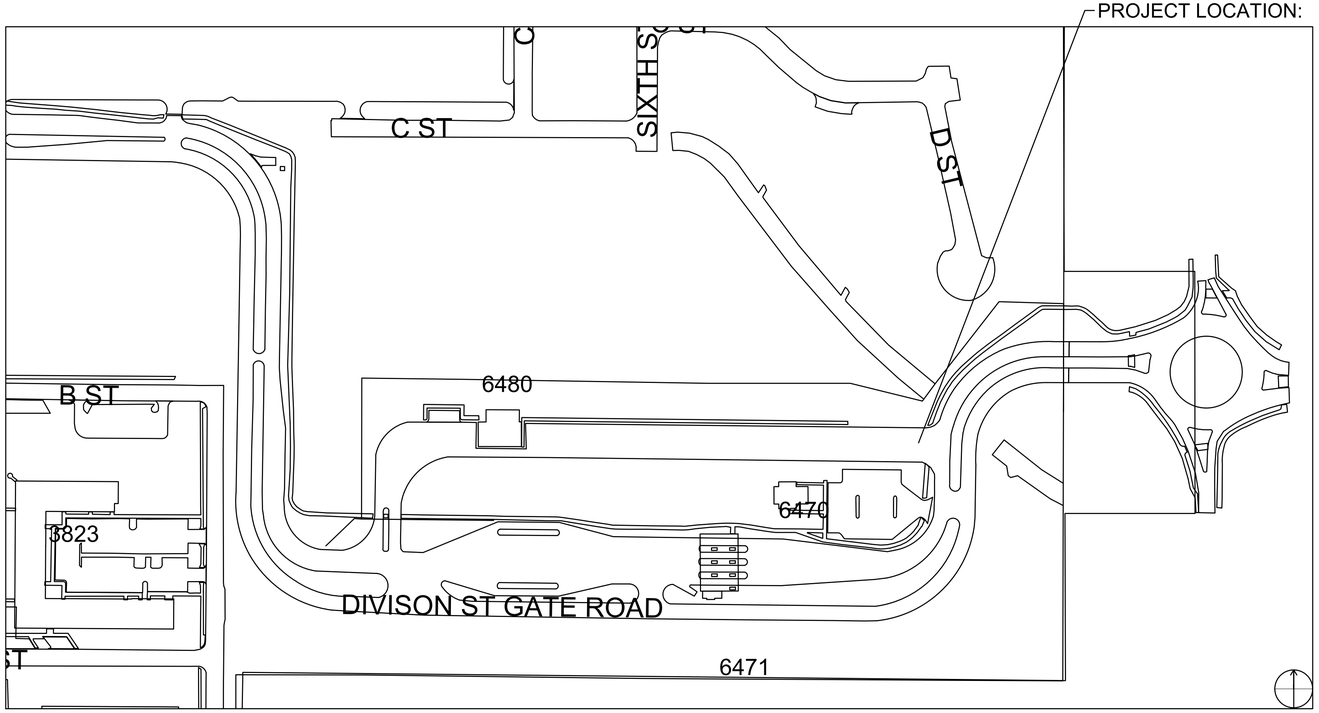

Sheet List Table

SHEET NUMBER	SHEET TITLE
GENERAL	
G-001	COVER SHEET
CIVIL	
C-100	EXISTING UTILITY MAP
C-101	PROPOSED SITE PLAN
C-300	SECTIONS
C-500	SECURITY GATE DETAILS
C-501	SECURITY FENCE DETAILS
C-502	FENCE CONNECTION DETAILS

MARK	DESCRIPTION	DATE

81ST CIVIL ENGINEER SQUADRON
508 L STREET B4705
BILOXI, MS 39534

DESIGNED BY: Z COOKES
DRAWN BY: N. KLEIN
CHECKED BY: E. CLEVELAND
SUBMITTED BY: E. CLEVELAND
SIZE: ANSI D
ISSUE DATE: JUNE 2026
SOLICITATION NO.:
CONTRACT NO.:

KEESLER AIR FORCE BASE BILOXI, MISSISSIPPI
EXTEND PERIMETER FENCE AT DIVISION ST. GATE
PROJECT NUMBER: MAHG261006

COVER SHEET

SHEET ID
G-001

100% DESIGN SUBMITTAL

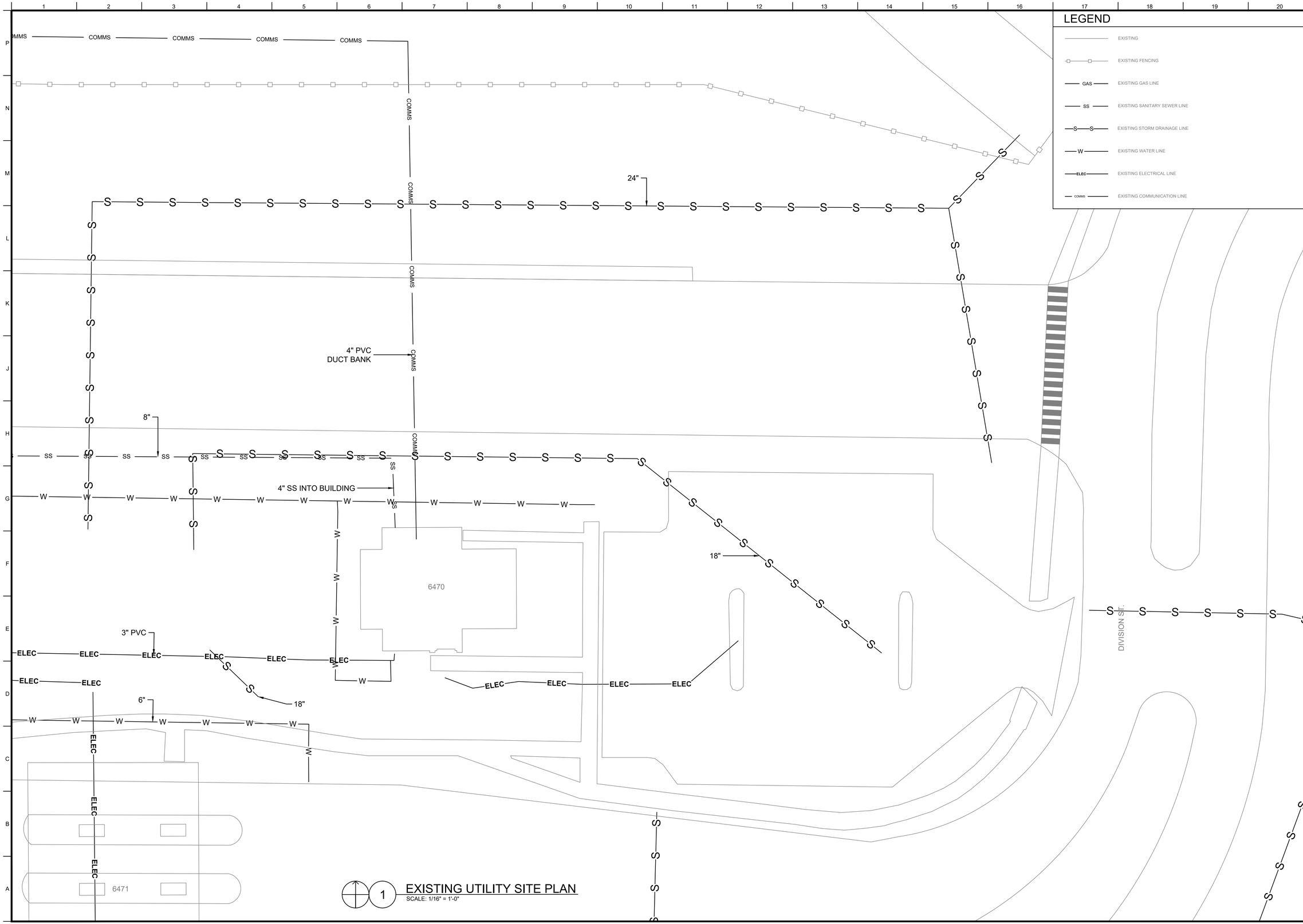

1 EXISTING UTILITY SITE PLAN
SCALE: 1/16" = 1'-0"

LEGEND

	EXISTING
	EXISTING FENCING
GAS	EXISTING GAS LINE
SS	EXISTING SANITARY SEWER LINE
S	EXISTING STORM DRAINAGE LINE
W	EXISTING WATER LINE
ELEC	EXISTING ELECTRICAL LINE
COMMS	EXISTING COMMUNICATION LINE

MARK	DESCRIPTION	DATE

ISSUE DATE: JUNE 2025
SOLICITATION NO.:
CONTRACT NO.:

DESIGNED BY: J. COOKS
DRAWN BY: N. KLEIN
CHECKED BY: E. CLEVELAND
SUBMITTED BY: E. CLEVELAND
SIZE: ANSI D

81ST CIVIL ENGINEER SQUADRON
508 L STREET B4705
BILOXI, MS 39534

KEESLER AIR FORCE BASE BILOXI, MISSISSIPPI
EXTEND PERIMETER FENCE AT DIVISION ST. GATE
PROJECT NUMBER: MAHG261006

EXISTING UTILITY MAP

SHEET ID
C-100

100% DESIGN SUBMITTAL

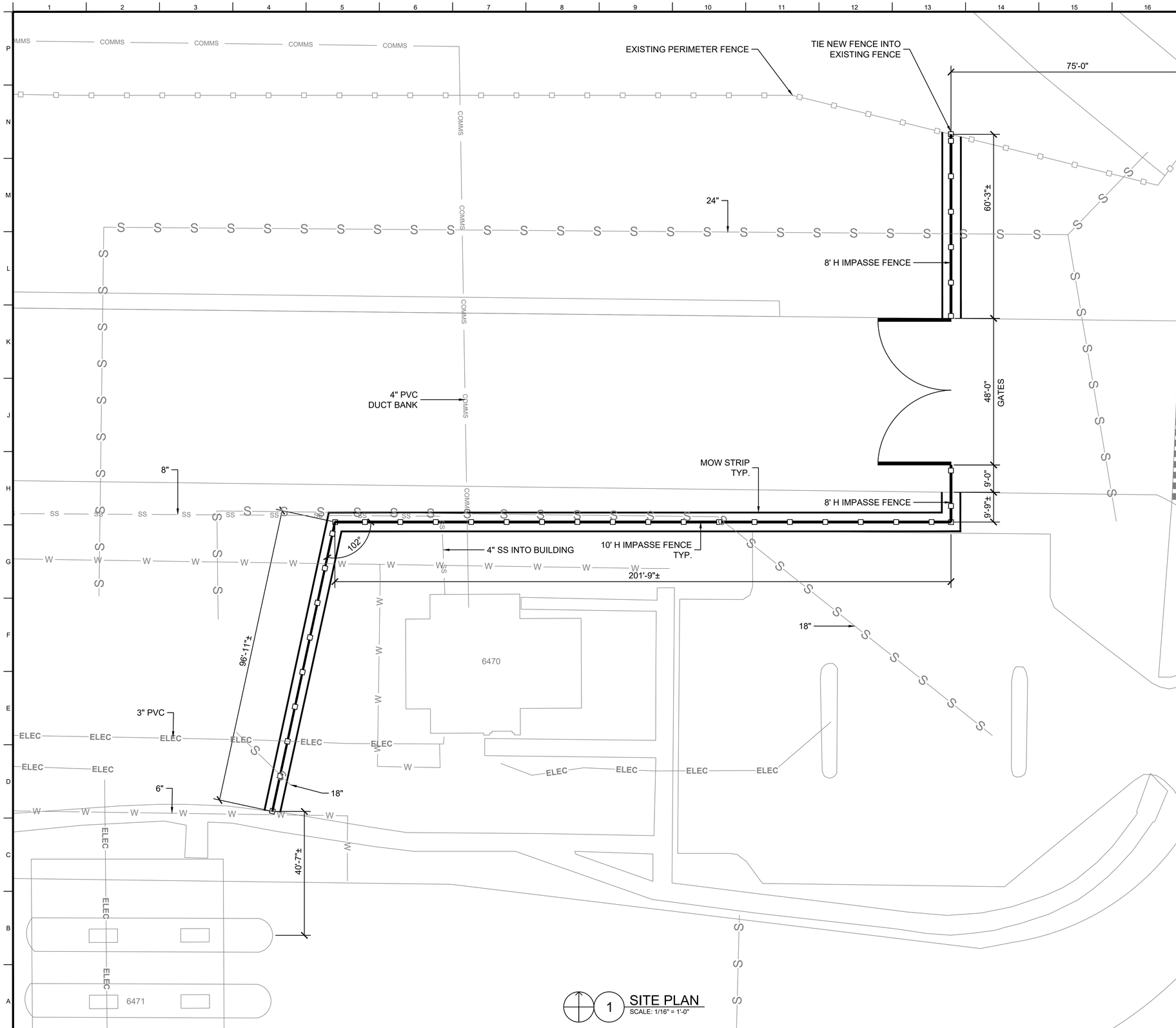

1 SITE PLAN
SCALE: 1/16" = 1'-0"

GENERAL NOTES

1. COMPLY WITH ALL FEDERAL, STATE, LOCAL, AND AIR FORCE REGULATIONS.
2. BEFORE STARTING ANY WORK, THOROUGHLY INSPECT AND DOCUMENT THE EXISTING CONDITIONS OF THE CONSTRUCTION AREA AND ADJACENT PROPERTIES. THIS DOCUMENTATION WILL SERVE AS A BASELINE TO PREVENT DISPUTES REGARDING DAMAGE POTENTIALLY CAUSED BY CONTRACT-RELATED ACTIVITIES. THE CONTRACTOR IS RESPONSIBLE FOR REPAIRING ANY DAMAGE OR CONTAMINATION RESULTING FROM WORK ACTIVITIES AT NO ADDITIONAL COST TO THE GOVERNMENT.
3. CONDUCT A COMPREHENSIVE FIELD VERIFICATION OF EXISTING SITE CONDITIONS BEFORE ANY WORK BEGINS. ALL DISCREPANCIES MUST BE REPORTED TO THE CONTRACTING OFFICER IN WRITING IMMEDIATELY.
4. PROTECT ALL EXISTING EQUIPMENT, FURNISHINGS, AND FINISHES FROM DUST, PAINT, AND DEBRIS.
5. PROMPTLY REMOVE AND DISPOSE OF ALL DEMOLISHED MATERIALS FROM THE PROJECT SITE IN ACCORDANCE WITH ALL APPLICABLE FEDERAL, STATE, LOCAL LAWS AND REGULATIONS.
6. MAINTAIN A CLEAN AND ORDERLY JOB SITE AT ALL TIMES.
7. REPORT ALL MISHAPS INVOLVING AIR FORCE PERSONNEL, PROPERTY, OR EQUIPMENT TO THE CONTRACTING OFFICER.
8. COORDINATE INSTALLATION OF EXISTING EQUIPMENT, SYSTEMS AND DISCIPLINES.
9. IF PERSONNEL ENCOUNTER SUSPECTED ASBESTOS OR STOP WORK IMMEDIATELY AND NOTIFY THE CONTRACTING OFFICER.
10. PROVIDE HAZARDOUS MATERIALS LIST, QUANTITIES, AND SAFETY DATA SHEETS TO CONTRACTING OFFICER BEFORE WORK BEGINS.
11. CONTRACTOR IS URGED TO PERFORM ALL WORK TO PREVENT INTERFERENCE WITH ECOLOGICAL BALANCE OF THE ENVIRONMENT.
12. GOVERNMENT PROVIDED AS-BUILTS ARE FOR REFERENCE ONLY.
13. ALL WORK MUST CONFORM TO THE LATEST VERSIONS OF:
    - UNIFIED FACILITIES CRITERIA (UFC)
    - STORM WATER POLLUTION PREVENTION PLAN (SWPPP)
    - INTERNATIONAL MECHANICAL CODE (IMC)
    - AMERICAN SOCIETY OF HEATING, REFRIGERATING AND AIR-CONDITIONING ENGINEERS (ASHRAE)
    - THE SHEET METAL AND AIR CONDITIONING CONTRACTORS' NATIONAL ASSOCIATION (SMACNA)
    - NATIONAL FIRE PROTECTION ASSOCIATION (NFPA)
    - NATIONAL ELECTRICAL CODE (NEC)
14. GPR REQUIRED FOR LOCATION OF UTILITIES AT START OF PROJECT TO ENSURE UTILITIES ARE AVOIDED.

LEGEND

- NEW
- EXISTING
- CONCRETE
- EARTHWORK
- EXISTING EARTH
- EXISTING ELECTRICAL LINE
- EXISTING SANITARY SEWER LINE
- EXISTING STORM DRAINAGE LINE
- EXISTING WATER LINE
- EXISTING COMMUNICATION LINE
- EXISTING GAS LINE
- EXISTING FENCE
- NEW DOUBLE SWING GATE
- NEW FENCE WITH MOW STRIP

MARK	DESCRIPTION	DATE

ISSUE DATE: JUNE 2025
SOLICITATION NO.:
CONTRACT NO.:
DESIGNED BY: D. COOPER
DRAWN BY: N. KLEIN
CHECKED BY: E. CLEVELAND
SUBMITTED BY: E. CLEVELAND
SIZE: ANSI D

81ST CIVIL ENGINEER SQUADRON
508 L STREET B4705
BILOXI, MS 39534

KEESLER AIR FORCE BASE BILOXI, MISSISSIPPI
EXTEND PERIMETER FENCE AT DIVISION ST. GATE
PROJECT NUMBER: MAHG261006

PROPOSED SITE PLAN

SHEET ID
C-101

100% DESIGN SUBMITTAL

GENERAL NOTES

1. CONTRACTOR REQUIRED TO FIELD VERIFY ALL DIMENSIONS AND CONDITIONS PRIOR TO BID AND START OF CONSTRUCTION. NOTIFY CONTRACTING OFFICER OF ANY CONDITIONS DETRIMENTAL TO THE COMPLETION OF THE WORK AS DESIGNED.

LEGEND

	ASPHALT/ASPHALT DEMOLTION
	EARTHWORK
	NEW GRASS

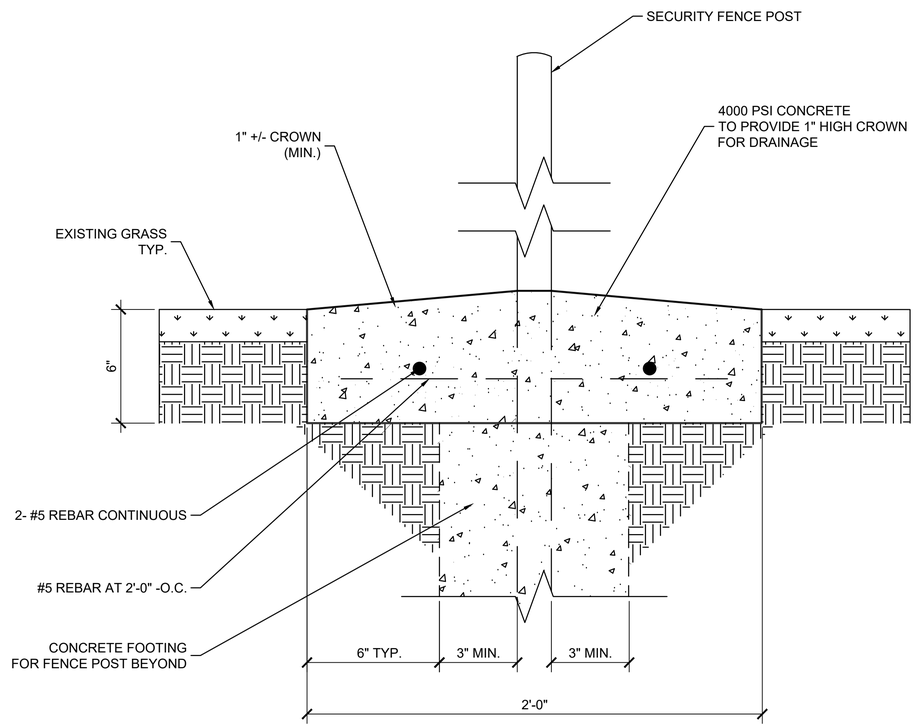

1 MOW STRIP AT FOOTING CROSS SECTION
SCALE: N.T.S.

MARK	DESCRIPTION	DATE

DESIGNED BY: Z. COOKS
DRAWN BY: N. KLEIN
CHECKED BY: E. CLEVELAND
SUBMITTED BY: E. CLEVELAND
SIZE: ANSI D
ISSUE DATE: JUNE 2025
SOLICITATION NO.:
CONTRACT NO.:

81ST CIVIL ENGINEER SQUADRON
508 L STREET B4705
BILOXI, MS 39534

KEESLER AIR FORCE BASE BILOXI, MISSISSIPPI
EXTEND PERIMETER FENCE AT DIVISION ST. GATE
PROJECT NUMBER: MAHG261006

SECTIONS

SHEET ID
C-300

100% DESIGN SUBMITTAL

GENERAL NOTES

1. CONTRACTOR SHALL FIELD MEASURE ALL LOCATION AND ENSURE FENCE/GATE SYSTEMS CAN CONNECT TO EXISTING FENCE WITHOUT REMOVAL OF FENCE NOT PROPOSED FOR DEMOLITION. BY AMERISTAR TO MATCH EXITING SYSTEM.
2. ALL INSTALLATION SHALL BE PER MANUFACTURER'S REQUIREMENTS.
3. ALL GATES SHALL INCLUDE DROP RODS WITH PIPE SLEEVES.
4. ENSURE THAT THE GATE WILL SWING INWAORD

KEYNOTES

1. PROVIDE ONE 6" WHEEL FOR EACH GATE

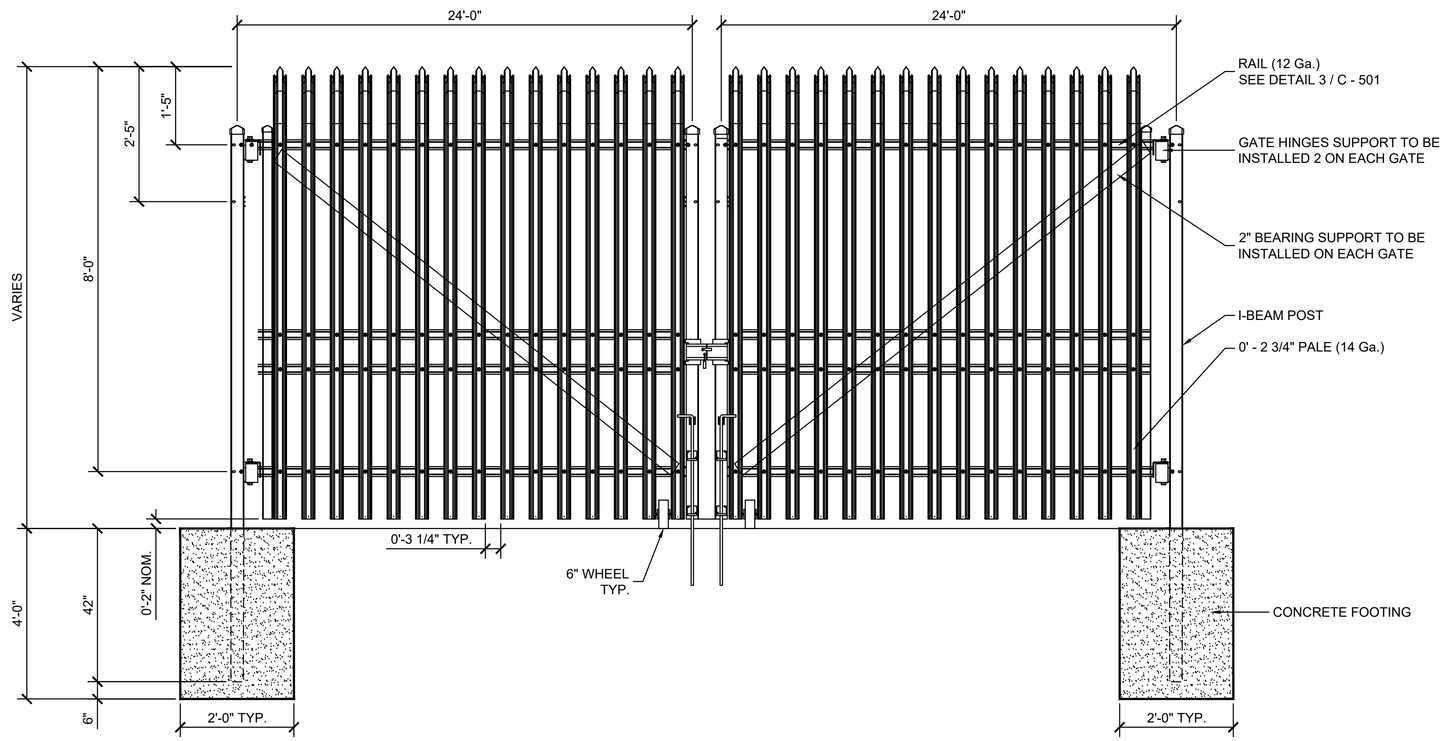

ELEVATION

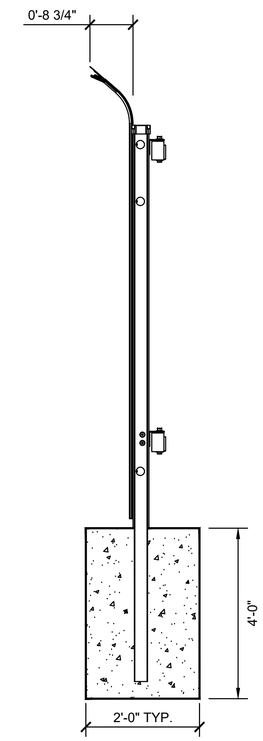

GATE POST SECTION

1 GATE DETAILS
SCALE: 3/4" = 1'-0"

MARK	DESCRIPTION	DATE

ISSUE DATE: JUNE 2026
SOLICITATION NO.:
CONTRACT NO.:

DESIGNED BY: Z. COOMES
DRAWN BY: N. KLEIN
CHECKED BY: E. CLEVELAND
SUBMITTED BY: E. CLEVELAND
SIZE: ANSI D

81ST CIVIL ENGINEER SQUADRON
508 L STREET B4705
BILOXI, MS 39534

KEESLER AIR FORCE BASE BILOXI, MISSISSIPPI
EXTEND PERIMETER FENCE AT DIVISION ST. GATE
PROJECT NUMBER: MAHG261006

SECURITY GATE DETAILS

SHEET ID
C-500

100% DESIGN SUBMITTAL

GENERAL NOTES

1. 3"(76.2) X 12 Ga. I-BEAM RECOMMENDED FOR 8' HEIGHTS.
2. FENCING PER MANUFACTURER RECOMMENDATIONS TO MEET UFC 4-022-03.

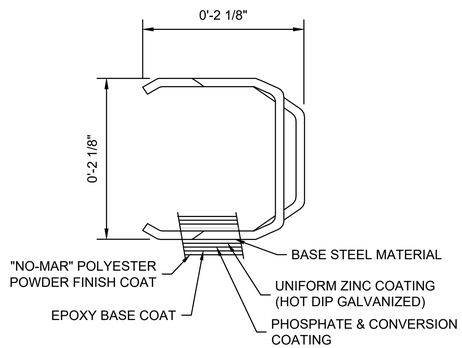

4 RAIL DETAIL
SCALE: N.T.S.

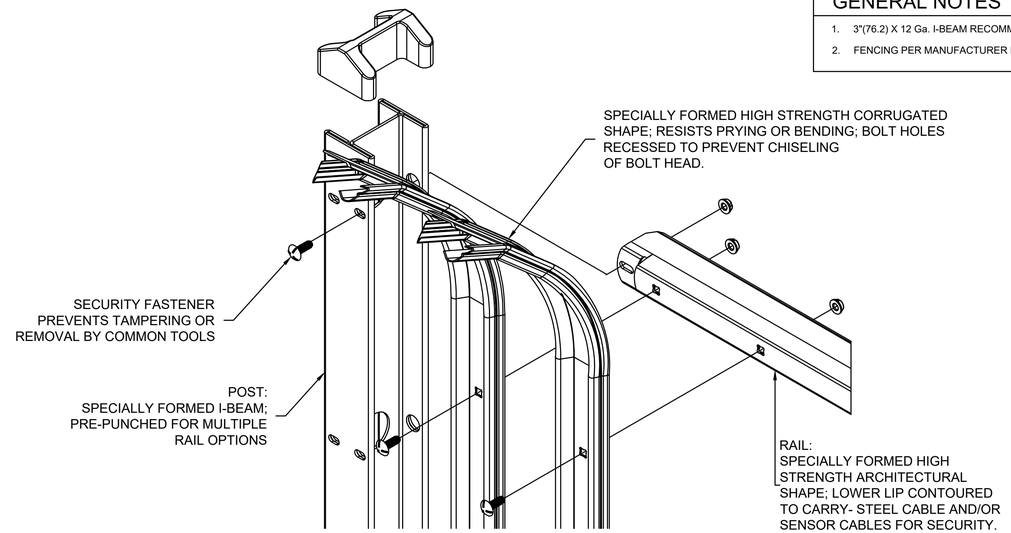

3 TYPICAL FENCE ISOMETRIC DETAIL
SCALE: N.T.S.

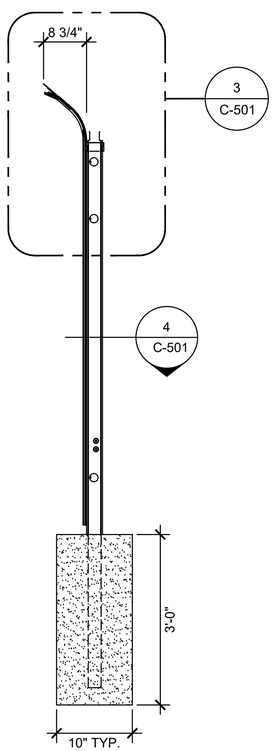

2 I-BEAM POST SECTION
SCALE: N.T.S.

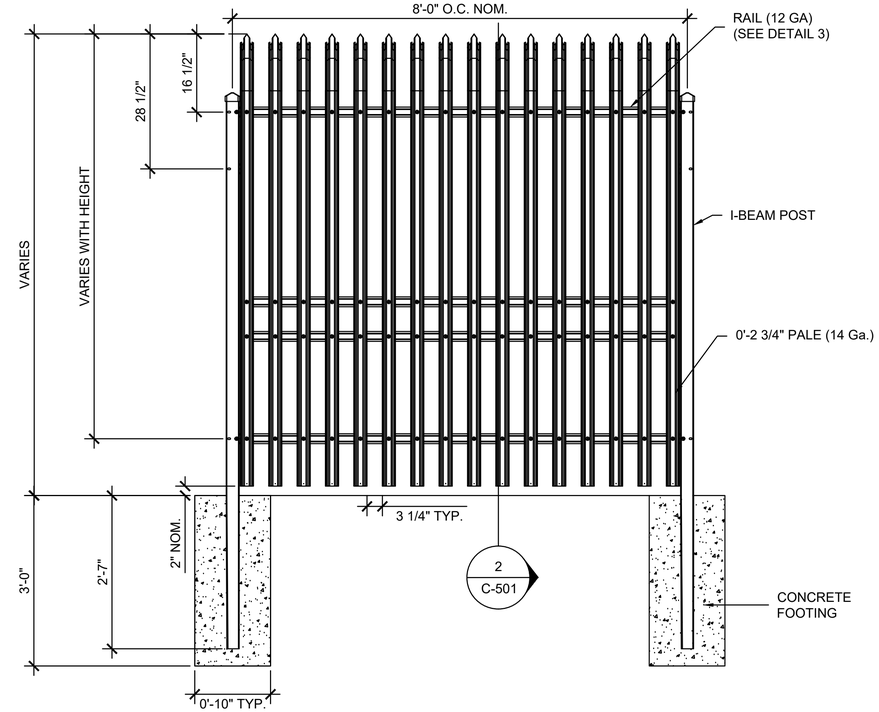

1 TYPICAL FENCE SECTION
SCALE: N.T.S.

MARK	DESCRIPTION	DATE

ISSUE DATE: JUNE 2025
SOLICITATION NO.:
CONTRACT NO.:

DESIGNED BY: I. ZOMES
DRAWN BY: N. KLEIN
CHECKED BY: E. CLEVELAND
SUBMITTED BY: E. CLEVELAND
SIZE: ANSI D

81ST CIVIL ENGINEER SQUADRON
508 L STREET B4705
BILOXI, MS 39534

KEESLER AIR FORCE BASE BILOXI, MISSISSIPPI
EXTEND PERIMETER FENCE AT DIVISION ST. GATE
PROJECT NUMBER: MAHG261006

SECURITY FENCE DETAILS

SHEET ID
C-501

100% DESIGN SUBMITTAL

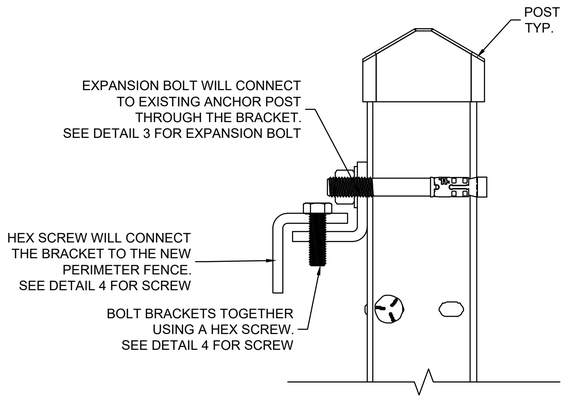

5 CONNECTION DETAIL
SCALE: NTS

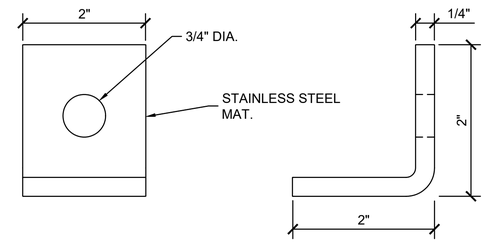

4 L-BRACKET DETAIL
SCALE: 1:1

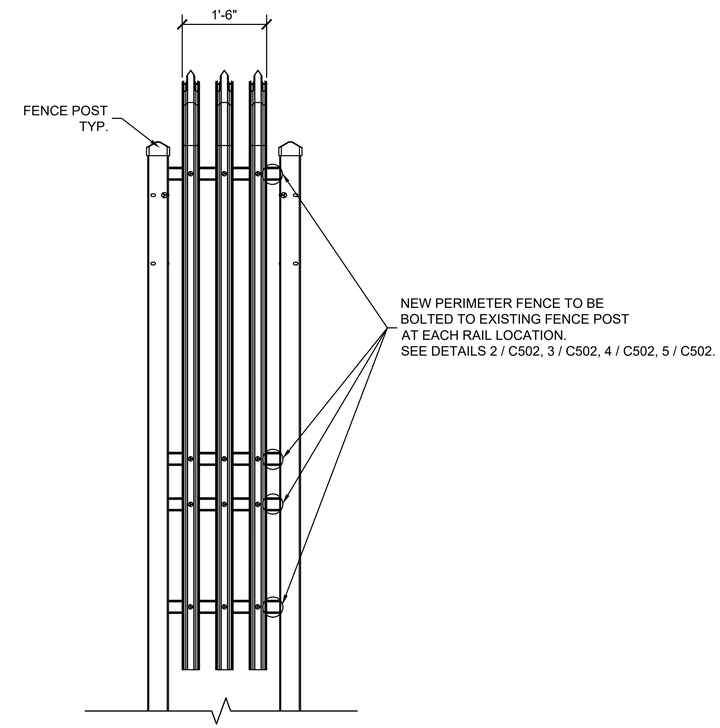

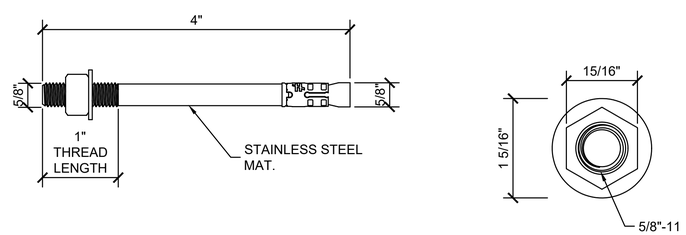

3 EXPANSION BOLT DETAIL
SCALE: N.T.S.

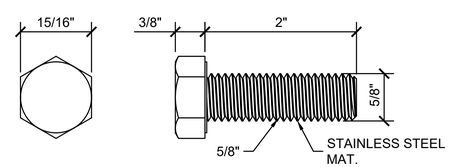

2 HEX HEAD SCREW DETAIL
SCALE: N.T.S.

1 FENCE CONNECTION DETAIL
SCALE: NTS

MARK	DESCRIPTION	DATE

DESIGNED BY: Z COOKES
DRAWN BY: N. KLEIN
CHECKED BY: E. CLEVELAND
SUBMITTED BY: E. CLEVELAND
SIZE: ANSI D
ISSUE DATE: JUNE 2026
SOLICITATION NO.:
CONTRACT NO.:

81ST CIVIL ENGINEER SQUADRON
508 L STREET B4705
BILOXI, MS 39534

KEESLER AIR FORCE BASE BILOXI, MISSISSIPPI
EXTEND PERIMETER FENCE AT DIVISION ST. GATE
PROJECT NUMBER: MAHG261006

FENCE CONNECTION DETAILS

SHEET ID
C-502

100% DESIGN SUBMITTAL