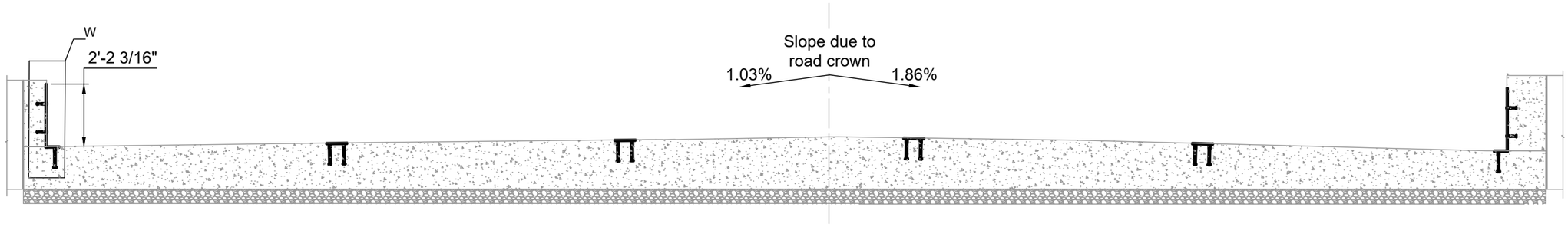

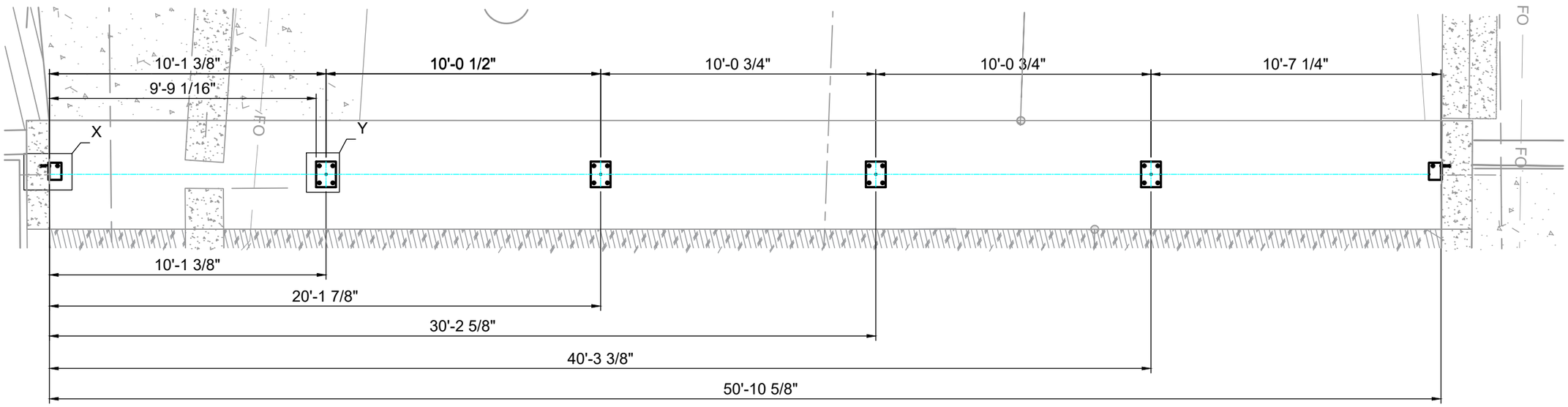

Rev	Description	Drn	App'd	Date
P07	Spans adjusted as installed	BJP	HV	03 Mar 25
P06	Minor ground profile amend	KM	HV	19 Dec 23
P05	Updated to reflect barrier drawing	KM	HV	15 Dec 23
P04	To match drawing revision P05	JD	AY	26 Jul 23
P03	Amended as per comments 10MAR23	JD	AY	27 Mar 23
P02	Drawing file / project name amends	AL	JD	16 Feb 23
P01	First Issue	AL	JD	10 Feb 23

Reference Drawings
CS105 27250-000-00
CS106 27251-000-00

Status: For Information

enquiries@floodcontrolint.com
FLOODCONTROL INTERNATIONAL

FLOOD CONTROL INTERNATIONAL INC operate a policy of continuous improvement & reserve the right to amend specifications without notice. All dimensions subject to manufacturers tolerances.

© Copyright of FLOOD CONTROL INTERNATIONAL INC. All rights reserved. No part of this drawing to be reproduced without their prior permission.

Project: Sunland Park Levee Repair

Title: FB02 Setting Out - West

Status: S4

First Angle Projection

Drg No: FC22272-FCI-SET-2002

Rev: P07

Contract Number: 191BWC22C0011

Page No: 1 of 2

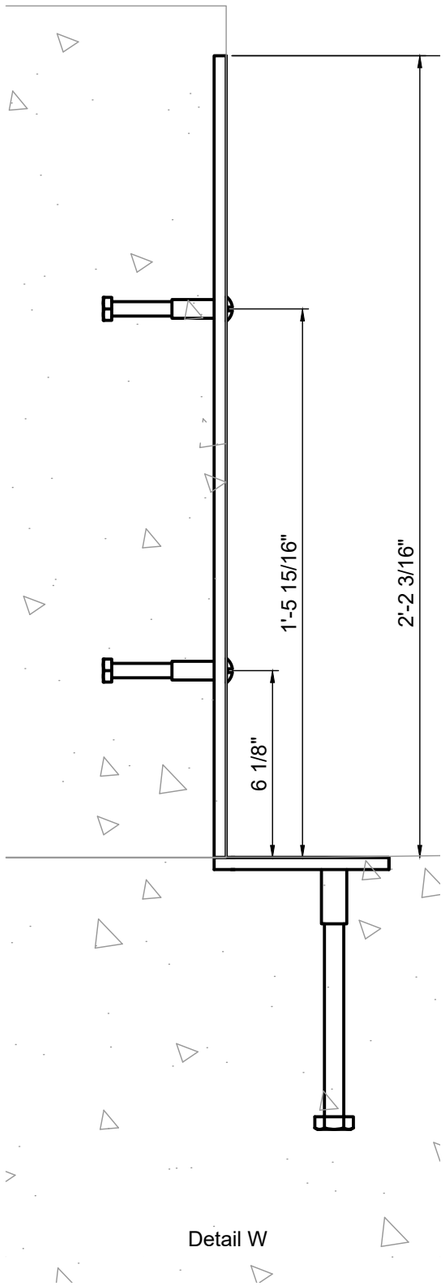

Detail W

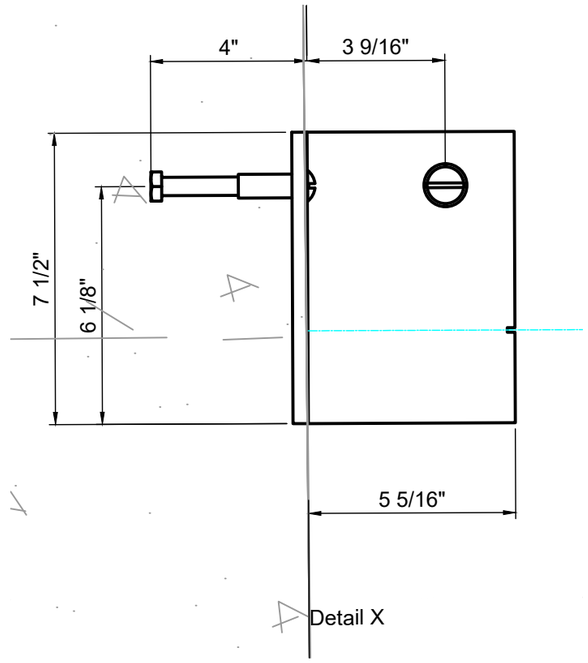

Detail X

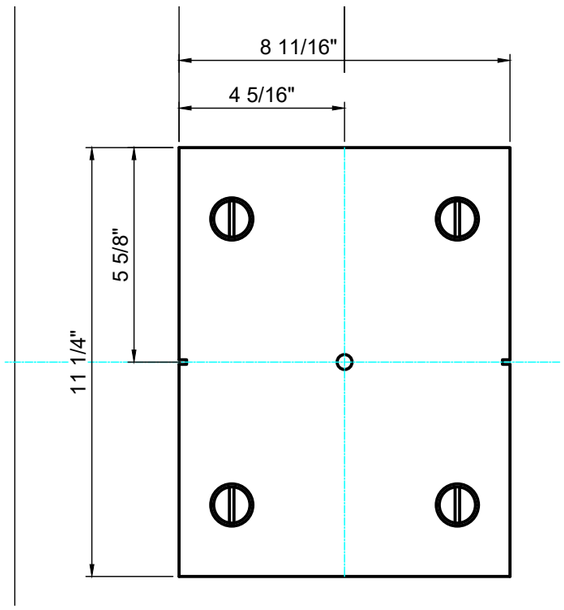

Detail Y

Installation Notes:

1. Installation of embeds to be set out per these drawings.
2. Pre Placement inspection to verify location of embeds, and care is to be taken during placement to not disrupt embed placement.
3. Ensure embeds have blanking bolts installed and sealed to prevent concrete from entering couplings.
4. Clean embeds after concrete placement.
5. Trial fit instructions:
   a. Measure embed centerlines after concrete placement to verify design dimensions.
   b. Install posts by hand. No equipment will be used to install stop log arrangement. There is no possibility of damage to concrete.
   c. If embed placement is correct, all stoplogs will be same length. One set of stoplogs to be shipped with field trim to account for embed placement variation.
   d. If there is a need to trim or if varying lengths of boards is needed, drawings shall be as built and piece marks are to be developed and marked in the field and recorded in as built drawings, installation and operation manuals.
   e. Once posts are set, boards are to be set by hand to avoid damage to materials and concreted. Installation manual to be followed.
   f. Disassemble and store in stop log storage shed.

Status	For Information	
	enquiries@floodcontrolint.com FLOODCONTROL INTERNATIONAL	
	FLOOD CONTROL INTERNATIONAL INC operate a policy of continuous improvement & reserve the right to amend specifications without notice. All dimensions subject to manufacturers tolerances.	
	© Copyright of FLOOD CONTROL INTERNATIONAL INC. All rights reserved. No part of this drawing to be reproduced without their prior permission.	
Project	Sunland Park Levee Repair	Status S4
Title	FB02 Setting Out - West	
First Angle Projection	Drg No FC22272-FCI-SET-2002	Rev P07
Page No 2 of 2		

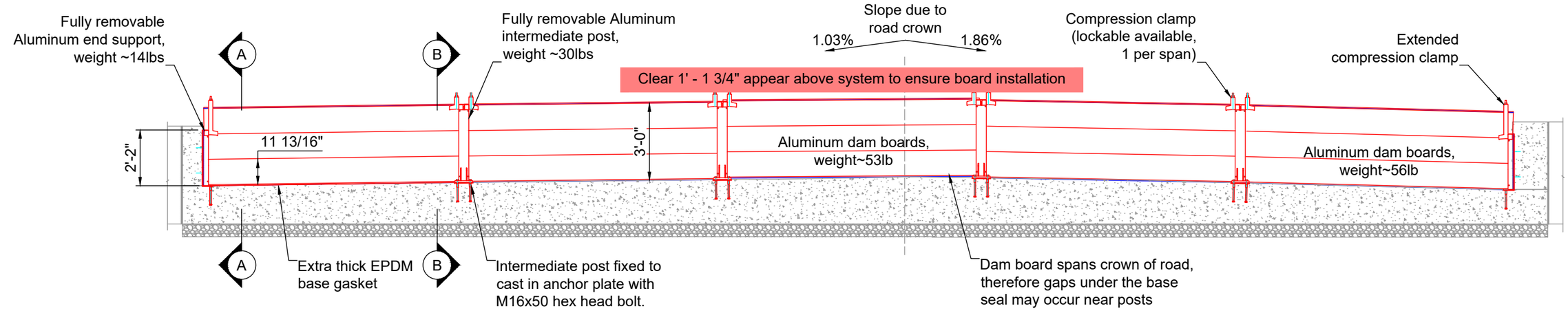

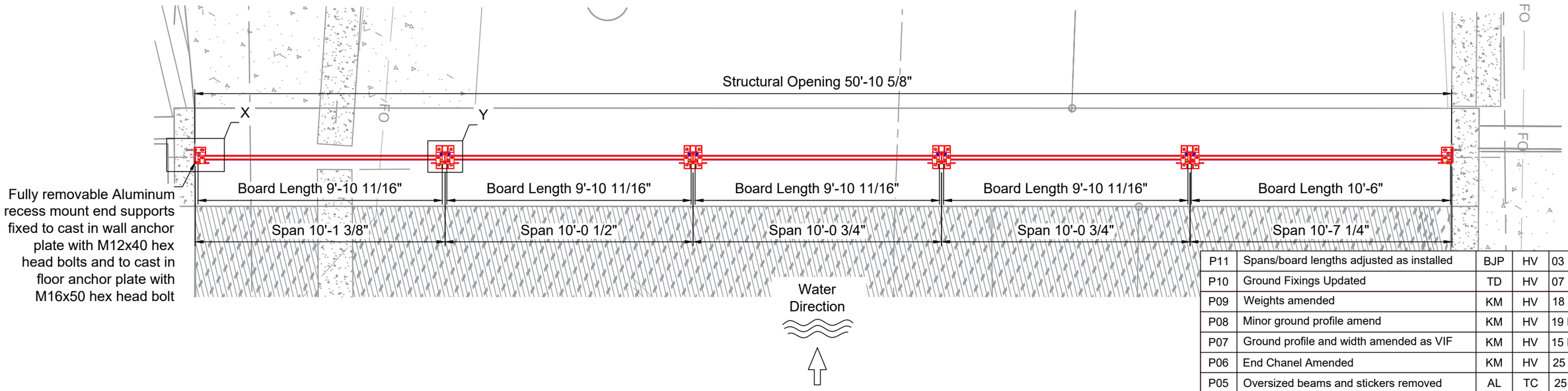

Rev	Description	Drn	App'd	Date
P11	Spans/board lengths adjusted as installed	BJP	HV	03 Mar 25
P10	Ground Fixings Updated	TD	HV	07 Mar 24
P09	Weights amended	KM	HV	18 Jan 24
P08	Minor ground profile amend	KM	HV	19 Dec 23
P07	Ground profile and width amended as VIF	KM	HV	15 Dec 23
P06	End Chanel Amended	KM	HV	25 Oct 23
P05	Oversized beams and stickers removed	AL	TC	25 Jul 23
P04	Amended as client comments	AL	JD	28 Apr 23
P03	Amended as per comments 10MAR23	AL	JD	27 Mar 23
P02	Min foundation depth changed	AL	JD	16 Jan 23
P01	First Issue	AL	JD	21 Nov 22

Contract Number: 191BWC22C0011

Reference Drawings
CS105 27250-000-00
CS106 27251-000-00

Status: For Approval

Fixing Schedule

Item	Fixing	Qty.
1	M16x50 hex bolt A4	18
2	M16 washer A4	18
3	M16 flat head blanking bolt A4	18
4	M12x40 hex bolt A4	4
5	M12 washer A4	4
6	M12 dome head blanking bolt A4	4

Tools required

24mm wrench for clamp & M16 bolts
17mm wrench for M12 bolts
8mm Allen key for clamp
Flat head screwdriver for blanking bolts

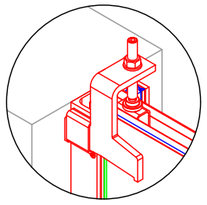

Isometric view of clamp

enquiries@floodcontrolint.com
FLOODCONTROL INTERNATIONAL

FLOOD CONTROL INTERNATIONAL INC operate a policy of continuous improvement & reserve the right to amend specifications without notice. All dimensions subject to manufacturers tolerances.

© Copyright of FLOOD CONTROL INTERNATIONAL INC. All rights reserved. No part of this drawing to be reproduced without their prior permission.

Project: Sunland Park Levee Repair

Title: FB02 Slot-in Barrier System - West

Status: S4

First Angle Projection

Drg No: FC22272-FCI-SBS-0102

Rev: P11

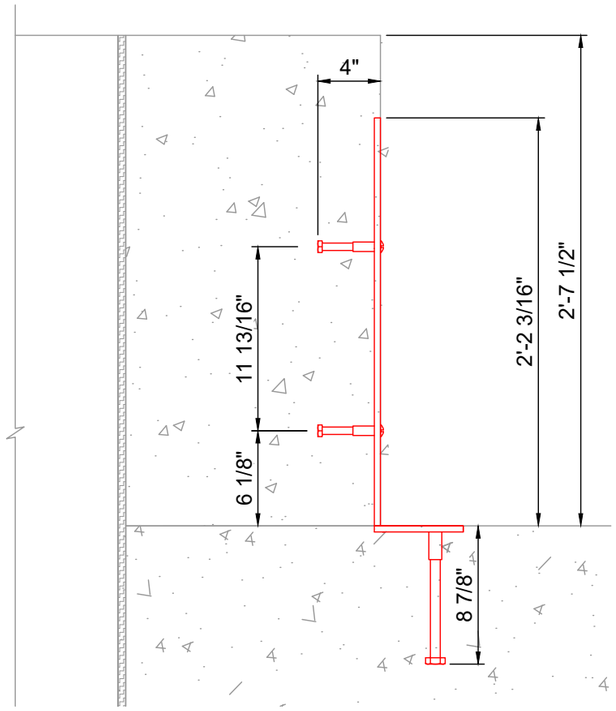

LHS Elevation
System not in place

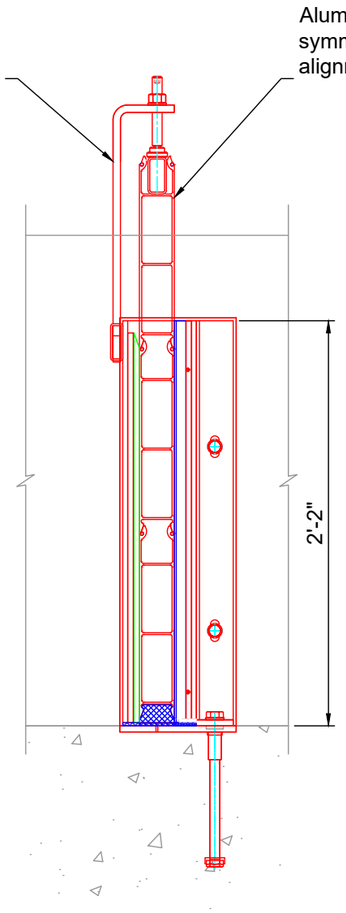

Section A - A

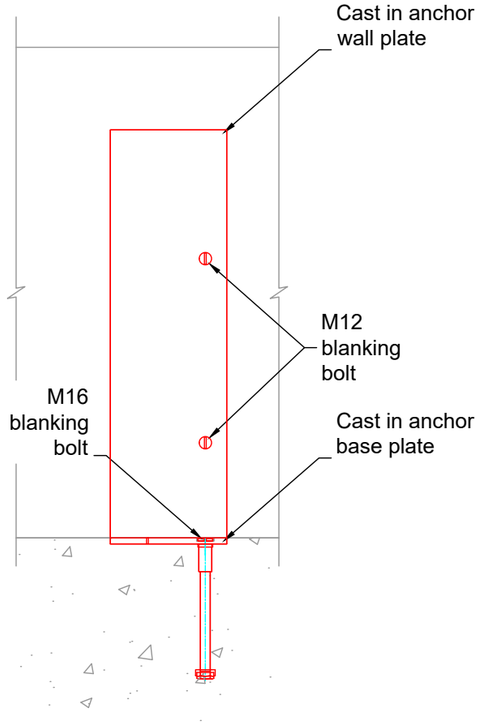

Section A - A
System not in place

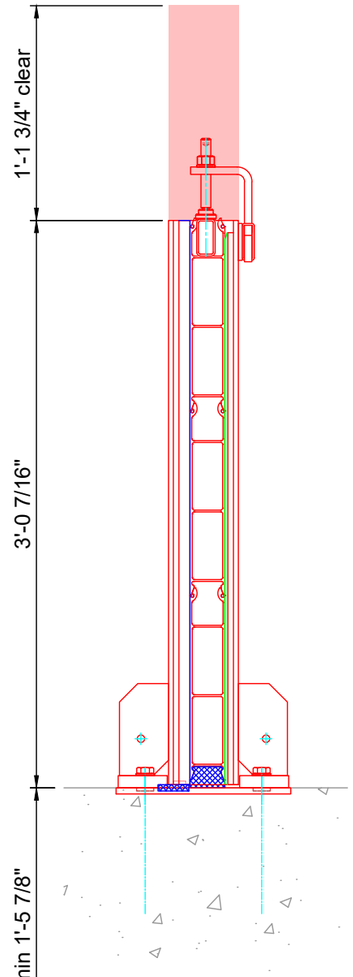

Section B - B

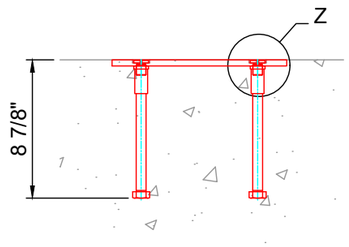

Section B - B
Post not in place

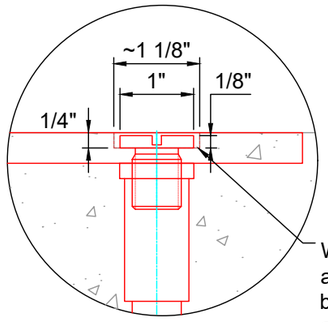

Detail Z

When removable posts are withdrawn, blanking bolts are used in the anchors to protect them from dirt.

Reference Drawings
CS105 27250-000-00
CS106 27251-000-00

Status: For Approval

enquiries@floodcontrolint.com

FLOODCONTROL INTERNATIONAL

FLOOD CONTROL INTERNATIONAL INC operate a policy of continuous improvement & reserve the right to amend specifications without notice. All dimensions subject to manufacturers tolerances.

© Copyright of FLOOD CONTROL INTERNATIONAL INC. All rights reserved. No part of this drawing to be reproduced without their prior permission.

Project	Sunland Park Levee Repair
Status	S4
Title	FB02 Slot-in Barrier System - West
First Angle Projection	
Drg No	FC22272-FCI-SBS-0102
Rev	P11
Page No	2 of 4

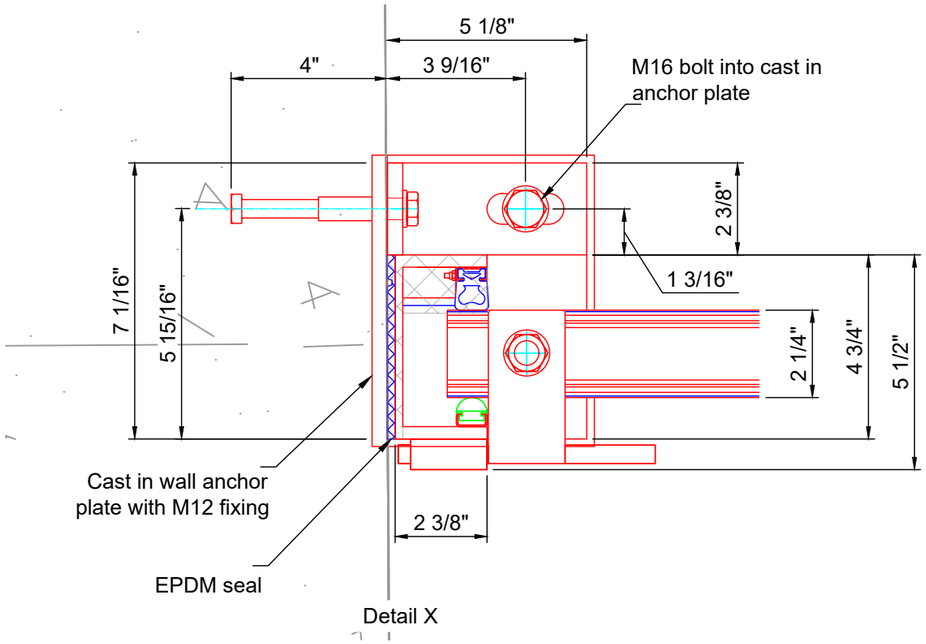

Detail X

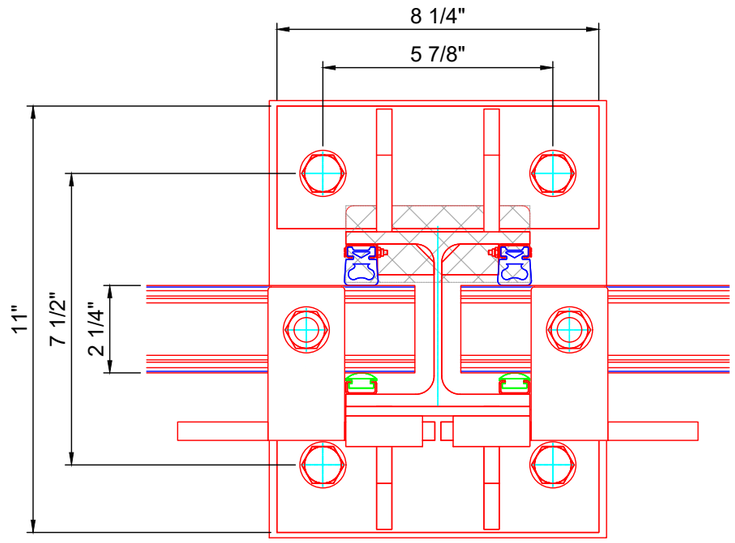

Detail Y

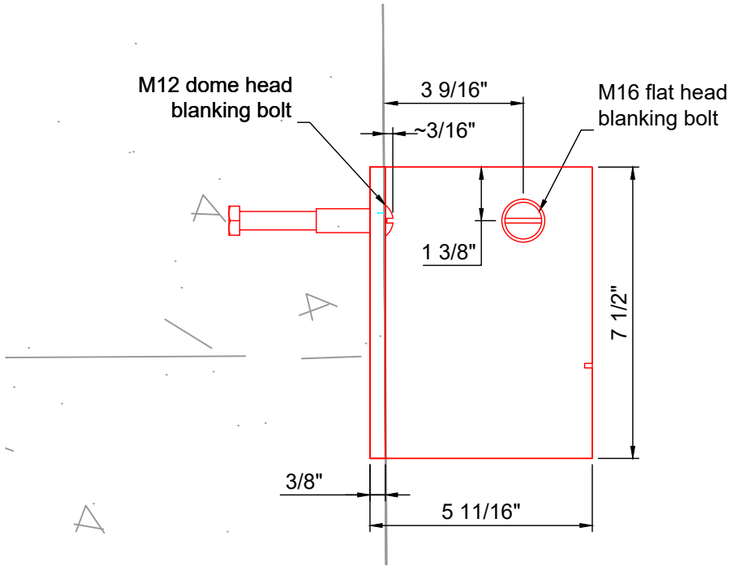

Detail X
System not in place

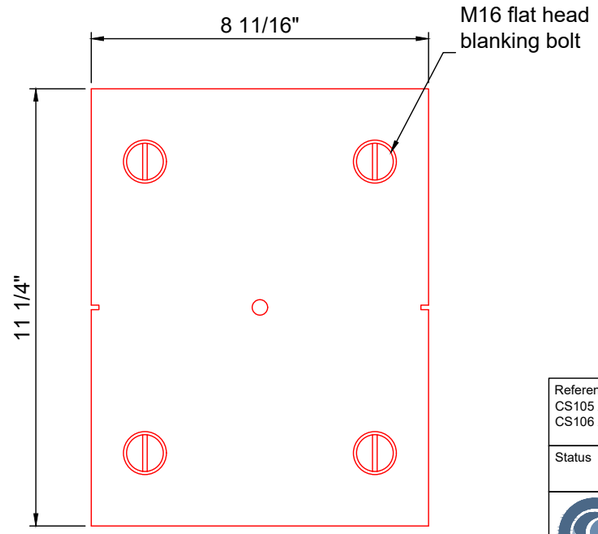

Detail Y
Post not in place

Reference Drawings
CS105 27250-000-00
CS106 27251-000-00

Status: For Approval

enquiries@floodcontrolint.com

FLOODCONTROL INTERNATIONAL

FLOOD CONTROL INTERNATIONAL INC operate a policy of continuous improvement & reserve the right to amend specifications without notice. All dimensions subject to manufacturers tolerances.

© Copyright of FLOOD CONTROL INTERNATIONAL INC. All rights reserved. No part of this drawing to be reproduced without their prior permission.

Project: Sunland Park Levee Repair		Status: S4
Title: FB02 Slot-in Barrier System - West		
First Angle Projection	Drg No: FC22272-FCI-SBS-0102	Rev: P11
Page No: 3 of 4		

General Notes:

1. Walls & floor prepared with Sika Primer (if necessary) and sealed with grey Sealant at end support locations.

2. Structural foundations and/or walls required are to be built and checked by others. Dimensions shown are minimum for fixings criteria which does not include any structural check such as sliding, overturning and bearing checks which must be carried out by a third party/others.

3. It is the client's responsibility to check wall strength and stability to withstand flood loading. Loads available on request.

4. Finished floor and walls to have a smooth, flat, level, impervious surface. ±3/16" tolerance across barrier length off of plumb.

5. Base gasket to allow no gaps due to the road crown.

Installation Notes:

1. Installation of embeds to be set out per these drawings.

2. Pre Placement inspection to verify location of embeds, and care is to be taken during placement to not disrupt embed placement.

3. Ensure embeds have blanking bolts installed and sealed to prevent concrete from entering couplings.

4. Clean embeds after concrete placement.

5. Trial fit instructions:
   a. Measure embed centerlines after concrete placement to verify design dimensions.
   b. Install posts by hand. No equipment will be used to install stop log arrangement. There is no possibility of damage to concrete.
   c. Once posts are set, boards are to be set by hand to avoid damage to materials and concreted. Installation manual to be followed.
   d. Disassemble and store in stop log storage shed.

Reference Drawings
CS102 27247-000-00
CS103 27248-000-00

Status: For Approval

enquiries@floodcontrolint.com

FLOODCONTROL INTERNATIONAL

FLOOD CONTROL INTERNATIONAL INC operate a policy of continuous improvement & reserve the right to amend specifications without notice. All dimensions subject to manufacturers tolerances.

© Copyright of FLOOD CONTROL INTERNATIONAL INC. All rights reserved. No part of this drawing to be reproduced without their prior permission.

Project: Sunland Park Levee Repair		Status: S4
Title: FB02 Slot-in Barrier System - West		
First Angle Projection	Drg No: FC22272-FCI-SBS-0102	Rev: P11
Page No: 4 of 4		