INTERNATIONAL BOUNDARY AND WATER COMMISSION UNITED STATES SECTION

CONSTRUCTION PLANS

RIO GRANDE CANALIZATION PROJECT
SUNLAND PARK LEVEE REPAIR
EAST LEVEE AND WEST LEVEE SEGMENT II
EL PASO COUNTY, TEXAS
DOÑA ANA COUNTY, NEW MEXICO
MARCH 4 2022

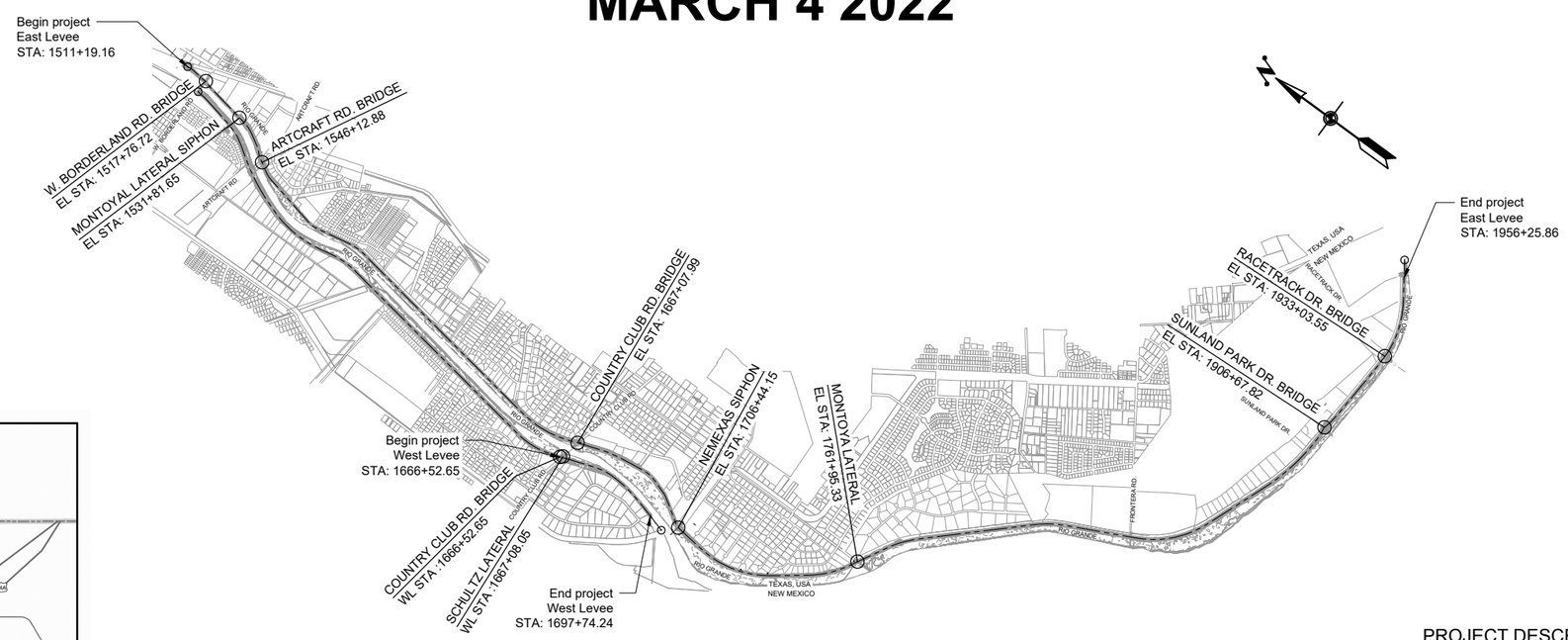

LOCATION MAP

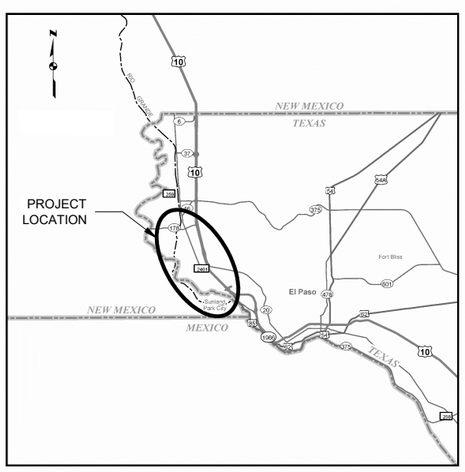

VICINITY MAP

PROJECT DESCRIPTION

International Boundary & Water Commission - United States Section Sunland Park Levee Repair - East Levee (approximately 8.4 miles along the east bank of the Rio Grande) and West Levee (approximately 0.6 miles along the west bank of the Rio Gande) EL Paso County, Texas & Doña Ana County, New Mexico
East Levee From STA. 1511+19.16 to STA. 1956+25.86
West Levee From STA. 1666+52.65 to STA. 1697+74.24.

ARCADIS US., Inc.
Texas Registered
Engineering Firm F-533

STATE OF TEXAS
KIRK LOWERY
119594
LICENSED PROFESSIONAL ENGINEER
1/28/2022

KIRK LOWERY
NEW MEXICO
25162
PROFESSIONAL ENGINEER
1/28/2022

Munoz & Dannenbaum JV
SBA Approved 8(a) Joint Venture
Alexandria | McAllen | Laredo | El Paso | Houston | Fort Worth | Dallas | Austin

ARCADIS Design & Consultancy for natural and built assets

191BWC22C0011 191BWC22R0002 **26885-000-01**

INDEX OF SHEETS

SHEET NO.	USIBWC NO.	SHEET TITLE
G001	26885-000-01	Cover Sheet
G002	26886-000-03	Sheet Index and General Notes
G003	26887-000-00	Abbreviations, Legend and Symbols
G004 & G005	26888-000-00 & 26889-000-00	East Levee Existing Utility Information
G006	26890-000-00	West Levee Existing Utility Information
G101 - G103	26891-000-00 to 26893-000-00	East Levee Survey Control - Existing ROW Line and Curve Tables
G104 - G106	26894-000-00 to 26896-000-00	East Levee Survey Control - Control Points and Monuments
G107	26897-000-00	West Levee Survey Control - Existing ROW Line and Curve Tables
	26803-000-00	West Levee Survey Control - Existing ROW Line and Curve Tables
G108	26898-000-00	West Levee Survey Control - Existing Benchmarks, Control Points and Monument
	26804-000-00	West Levee Survey Control - Existing Benchmarks, Control Points and Monument
G201 - G204	26899-000-00 to 26902-000-00	East Levee Horizontal Control New ℄ Alignment
G205	26903-000-00	West Levee Horizontal Control New ℄ Alignment
G301	26904-000-00	East Levee Project Layout Key Map Sta: 1511+19.16 to 1750+00
G302	26905-000-00	East Levee Project Layout Key Map Sta: 1750+00 to 1956+25.86
G303	26906-000-00	West Levee Project Layout Key Map Sta: 1666+52.65 to 1702+74.24
	26496-001-00 to 26496-003-00	East Levee Photos
	26497-000-00	West Levee Photos
C-1	26907-000-00	Control Map
C001	26908-000-00	Right of Way Control Map
C002 - C008	26909-000-00 to 26915-000-00	Right of Way Map
C101 - C104	26916-000-00 to 26919-000-00	Typical Sections
C105	26920-000-00	Typical Benching Details
C106	26921-000-00	Typical Riprap Benching Details
C201 - C245	26922-000-01 to 26966-000-00	East Levee Plan & Profiles
C246	26967-000-01	East Levee Plan & Profile W Borderland Rd Bridge
C247	26968-000-01	East Levee Plan & Profile Country Club Rd Bridge
C248	26969-000-01	East Levee Plan & Profile Sunland Park Rd Bridge
C249	26970-000-01	East Levee Plan & Profile Racetrack Rd Bridge
	26743-000-00	Borderland Bridge Upstream Handrail
	26744-000-00	Borderland Bridge Downstream Handrail
	26745-000-00	Country Club Bridge East Upstream Handrail
	26746-000-00	Country Club Bridge East Downstream Handrail
C261 - C264	26971-000-01 to 26974-000-01	West Levee Plan & Profile
C265	26975-000-01	West Levee Plan & Profile Country Club Rd Bridge
	26747-001-00 to 26747-002-00	Country Club Bridge West Upstream Handrail
	26748-001-00 to 26748-002-00	Country Club Bridge West Downstream Handrail
C301 - C303	26976-000-01 to 26978-000-01	Civil Details
C311	26979-000-01	East Levee Landside Ramp at Sta 1685+50
	26749-000-00	Typical Handrail Details
	26484-000-00	Racetrack Chicane
	26485-000-00	Blocking Access at Borderland Bridge Area
	26486-000-00	Borderland Chicane
	26487-000-00	Blocking Access at Canutillo Lateral Area
	26488-000-00	Blocking Access under Artcraft Bridge
	26489-000-00	Blocking Access near La Union Combined Lateral
	26490-000-00	Blocking Access at Racetrack Park
	27264-000-01	Montoya Intercepting Drain Excavation
	26498-000-00	Salt Cedar Clearing and Gravel Road at EOP
C321	26980-000-01	West Levee Country Club Bridge Intersection
	26491-000-00	West Levee Country Club Bridge Landside Ramp
C322	26981-000-00	West Levee Country Club Bridge Joint Layout
C323	26982-000-01	West Levee Concrete Driveway Plan
C324	26983-000-00	West Levee Concrete Driveway Cross Section
C501 - C651	26984-000-00 to 27234-000-00	East Levee Cross Sections
C681 - C691	27235-000-00 to 27245-000-00	West Levee Cross Sections
CS101	27246-000-00	Country Club Bridge East - Demolish Plan
CS102	27247-000-00	Country Club Bridge East - Stoplog Arrangement Layout
CS103	27248-000-00	Country Club Bridge East - Sectional Elevation View
CS104	27249-000-01	Country Club Bridge West - Demolition Plan
CS105	27250-000-01	Country Club Bridge West - Stoplog Arrangement Layout
CS106	27251-000-00	Country Club Bridge West - Cross Sectional Elevation View
	26796-000-00	Montoya Lateral WW Plan & Profile
	26797-000-00	Montoya Lateral WW Sections
	26798-000-00	Montoya Lateral WW Sections & Details
	26479-000-00 to 26481-000-00	Schultz Lateral Wasteway Plan & Profiles
	26482-000-00	Schultz Lateral Wasteway New Inlet Structure
	26483-000-00	Schultz Lateral Wasteway New Outlet Structure
S102	27252-000-00	Country Club Bridge East and West - Structural General Notes
S103 - S105	27253-000-00 to 27255-000-00	Country Club Bridge East - Section & Details
S106	27256-000-00	Country Club Bridge East - Barrier Railing & Transition
S113 - S115	27257-000-00 to 27259-000-00	Country Club Bridge West - Section & Details
S116	27260-000-00	Country Club Bridge West - Barrier Railing and Transition
	26492-000-00	Country Club Bridge West Floodwall Repair
CCCG-21	27261-000-00	TxDOT Concrete Curb and Curb and Gutter
PED-18	27262-001-03 to 27262-004-03	TxDOT Pedestrian Facilities Curb Ramps
PRD-13	27263-001-01 to 27263-003-01	TxDOT Pedestrian Handrail Details
GF(31)-19	26493-000-00	TxDOT Metal Beam Guard Fence TL-3 MASH Compliant
GF(31)DAT-19	26494-000-00	TxDOT Metal Beam Guard Fence (Downstream Anchor Terminal) TL-3 MASH Compliant
GF(31)TR TL2-19	26495-000-00	TxDOT Metal Beam Guard Fence Thrie-Beam Transition TL-2 MASH Compliant
	25084-000-01	USIBWC Levee Ramp Details
	26409-001-05 to 26409-003-05	USIBWC Gate Manufacture and Installation
	26424-001-02 to 26424-005-02	USIBWC Notice Signs
	26741-000-00	Chicane Manufacturer and Installation
	27094-000-00	Montoya Intercepting Drain Plan and Profile, Current Conditions and 1959 Profile

GENERAL NOTES

1.1 Do not scale drawings. All dimensions shall be as indicated on the plan. Contractor shall verify all dimensions and conditions at the job site before commencing work.

1.2 Horizontal datum is based on the New Mexico State Plane Coordinate Grid System (NMSPCGS), New Mexico Central Zone North American Datum of 1983 (NAD 83), in U.S. survey feet using GEOID 2012A. Vertical datum is based on North American Vertical Datum of 1988 (NAVD 88), in U.S. survey feet.

1.3 Reference stationing and offsets refer to the Centerline (℄) Alignment, unless otherwise noted. All proposed horizontal dimensions, radial dimensions, stations and offsets refer to the earthen levee, not the gravel road, unless otherwise noted. All proposed elevations refer to the earthen levee, not the gravel road or the topsoil treatment, unless otherwise noted.

1.4 All construction entrances shall be approved by the USIBWC or private land owners.

1.5 Locations of existing inlet/outlet structures are based on available information and survey of visible features. Field verify and protect all existing structures and facilities. Repair damaged structures and facilities at no additional cost to USIBWC.

1.6 All levee slopes and disturbed soil areas shall be revegetated.

1.7 Various existing signs are located throughout the project limits. Each USIBWC sign and Stop sign shall be removed and replaced with new signs in accordance with USIBWC drawing 26424. All other existing signs, whether shown or not shown, shall be removed, temporarily stored and relocated as directed by USIBWC. Replace any signs that are damaged during construction.

1.8 Various existing vehicular swing gates are located throughout the project limits. Each USIBWC gate shall be removed and replaced with a new gate in accordance with USIBWC Standard Drawing 26409. Removed gates shall have all concrete removed and be delivered to the USIBWC American Dam Field Office at 2616 West Paisano Drive, El Paso, TX 79922.

1.9 All road crossings, regardless of road type or material, shall have new USIBWC Notice Signs installed on each side of the crossing in accordance with USIBWC Standard Drawing 26424. All existing signs at road crossings shall be removed, have all concrete removed and be delivered to the USIBWC American Dam Field Office at 2616 West Paisano Drive, El Paso, TX 79922.

1.10 Inspect all structures and property within the project limits on a regular basis to locate any damages by construction activities. Repair all damage caused by construction activities in accordance with the requirements of the contract documents.

1.11 Toe drains were installed during the previous construction. The existing toe drains will be left in place. If toe drains are damaged during construction, they do not need to be repaired or replaced. If encountered, add a geotextile above the existing toe drains and extend it one foot on each side before placing the impervious fill. Review Contract IBM10C0018 drawings for locations of existing toe drains.

1.12 Remove all trash, rubble, and debris (including buried trash and debris) located within the project limits and dispose of at an approved site. Provide general housekeeping of trash, rubble, and debris during construction to maintain a clean construction site for the duration of the project. Contractor shall pay for all associated dumping fees.

EXISTING UTILITY COORDINATION

2.1 The existing utility features shown are based on an above-ground field survey and data provided by franchise utility companies and may not include all utilities at the site. Prior to the start of any construction, verify and confirm the existence and location, depth and height of all utilities, including the use of private subsurface utility locating service as necessary.

2.2 The existence, location and characteristics of underground utility information shown on these plans has been obtained from a review of available record data. No representation is made as to the accuracy or completeness of the information. Contractor shall field verify all dimensions, sizes, locations, and quantities of all existing utilities, and to resolve all discrepancies prior to the commencement of any work.

2.3 Any required relocation or adjustment of existing utilities shall be completed by the utility owner prior to construction. The relocation shall be based upon the terms of the utility owner's USIBWC license and will be completed at no cost to the contractor. The contractor shall perform utilities locates and surveys as soon as possible so that utility owners can be notified of required relocations and work can proceed without delaying construction activities.

2.4 Contact "Texas 811" (811 or 1-800-344-8377) and "New Mexico 811" (811 or 1-800-321-2537) at least 48 hours prior to beginning work to locate any utilities within the work zone. Provide written documentation to the COR that "Texas 811" and "NM 811" were contacted and all utilities were located within or adjacent to the project limits.

ANDREA GLOVER NEW MEXICO 16634 LICENSED PROFESSIONAL ENGINEER
STATE OF TEXAS ANDREA GLOVER 113650 LICENSED PROFESSIONAL ENGINEER
Revisions 1, 2 & 3

ARCADIS US., Inc.
Texas Registered
Engineering Firm F-533

STATE OF TEXAS KIRK LOWERY 119594 LICENSED PROFESSIONAL ENGINEER
1/28/2022

KIRK LOWERY NEW MEXICO 25162 PROFESSIONAL ENGINEER
1/28/2022

International Boundary & Water Commission
United States Section

ARCADIS

Munoz & Dannenbaum JV
SBA Approved 8(a) Joint Venture
Mercedes | McAllen | Laredo | El Paso | Houston | Fort Worth | Dallas | Austin

INTERNATIONAL BOUNDARY AND WATER COMMISSION
UNITED STATES AND MEXICO
UNITED STATES SECTION

RIO GRANDE CANALIZATION PROJECT

SUNLAND PARK LEVEE REPAIR

FOR CONSTRUCTION

REV NO.	DESIGNER	DATE	DESCRIPTION OF REVISION
3	Andrea Glover, PE	5/23/2022	Updated drawing list
2	Andrea Glover, PE	4/13/2022	Updated drawing list
1	Andrea Glover, PE	3/3/2022	Updated drawing list

Arcadis U.S. Inc.,
IBWC CONTRACTOR NAME

IBM15D001/IBM17T0010
IBWC CONTRACT/TASK ORDER

Arcadis U.S. Inc.,
DESIGNED BY

USIBWC HQ-ESD 01-28-2022

SHEET INDEX AND GENERAL NOTES

SOLICITATION/RFP NUMBER
191BWC22R0002

CONTRACT NUMBER
191BWC22C0011

G002

26886-000-03

CAD Filename G002-IBWC-03.dwg
Sheet/Set Name RIO GRANDE CANALIZATION PROJECT
Plot Style Table Name IBWC_B&W.ctb
Plot Scale 1:1
Paper Size ANSI full bleed D (22.00 x 34.00 Inches)
Plot Device DWG To PDF.pc3
Date and Time Plotted 5/23/2022 1:50 PM
Date Last Saved 5/23/2022 1:49 PM
AutoCAD Version 22.0s (LMS Tech)
IBWC Border V20170817

LEGEND

Match line STA : XX+XX See sheet - XX	Match line
	Levee centerline
	Ramp centerline
	USIBWC R.O.W. line
	Restoration limit
	Texas - New Mexico state line
	New Toe
	Top of Topsoil
	Shoulder Limit
	Existing ground
SS SS	Storm sewer line
G	Gas line
W	Water line
S S	Sanitary sewer line
FO FO	Fiber optic
OH	Overhead electric
C C C	Electric conduit
X X	Pipe fence
IF IF	Iron fence
	Wood fence
	Chain link fence
3755	Existing major contours
	Rockwall
	Guardrail
	Proposed Guardrail
	Expansion Joint
	Transverse tie joint
	Longitudinal tie joint
	Longitudinal construction joint
	Contraction joint
	Welded wire reinforcing (WWR)

(CONTINUED)

	Rock riprap
	Riprap - Plan view
	Riprap - Section view
	Bedding stone
	Undisturbed soil
	Concrete
	Grout / Sand
	Structural steel
	Aluminum stoplog
	Compacted subgrade
	Grouted riprap and bedding stone
	Crash cushion attenuator
	HMAC overlay
	Site concrete
	Concrete wall
	Demolition
	Remove concrete paving
	Remove asphalt overlay
	Preformed expansion joint material
	New aggregate surface - Plan view
	New aggregate roadway - Section view
	Fill (Impervious material)
	Excavation (Levee) and fill (Impervious material)
	Excavation (Levee)
	Min. vegetation-free zone
	Detectable warning system
	Existing Concrete Slope Paving

ABBREVIATIONS

ACI	American concrete Institute
ADD'L.	Additional
AISC	American Institute of Steel Construction
ALIGN.	Alignment
ALT.	Alternate
ALUM.	Aluminum
AND	&
Approx.	Approximate
ASTM	American society for testing materials
BEG.	Beginning
BOT.	Bottom
BP	Begin Project
B PL	Base plate
C	Curve
C/C	Center to center
CJ	Contraction joint
℄	Centerline
CLR.	Clear
CMP	Corrugated metal pipe
COL.	Column
Conc.	Concrete
Cont.	Continuous
CP CP#XXXX	Control point
CRCP	Continuous reinforced concrete pavement
CTR.	Center
CONST.	Construction
DET.	Detail
Dia	Diameter
DIM.	Dimension
DWG.	Drawing
E	Easting
EA.	Each
EBID	Elephant Butte Irrigation District
EE	Each end
EF	Each face
EGL	Existing ground level
EJ	Expansion joint
EL	Elevation
ELEC	Electric
EM EM	Electric meter
EMBD.	Embedded
EOP	End of Project
EP#1	El Paso Country Water Improvement District #1
EQV	Equivalent
EQ.	Equal
EW	Each way
Exist.	Existing
EXP.	Expansion
FP FP	Flag pole
F/S	Flood side
F/S	Flood side
FTG.	Footing
Ft	Feet
GALV.	Galvanized
GM GM	Gas meter
GR.	Grade
GV GV	Gas valve
H / Horiz.	Horizontal
HMAC	Hot-mix asphalt concrete
HT.	Height
H.P.	High point
IBC	International building codes
ICV ICV	Irrigation control valve
I.D.	Inner diameter
IRR	Irrigation
JBE JBE	Junction box electric
JT.	Joint
K.	Kip (1000 Pounds)
L	Line
LB.	Pounds
LCJ	Longitudinal construction joint
LG.	Long
Lt	Left
LTJ	Longitudinal tie joint
L/P L/P	Light pole
LS	Landside
Max.	Maximum
M.E.G.	Meet existing grade
MH MH	Manhole
MHT MHT	Telephone manhole
MON MON#XXXX	R.O.W. monument
Min.	Minimum
MID.	Middle Ordinate
N	Northing
NA	Not Available
NO.	Number
Nos.	Numbers
NTS	Not to scale
OC	On center
OD	Outside diameter
OH	Overhead electric
PC	Point of Curve
PG	Page
PI	Point of intersection
PL	Plate
P/P P/P	Power pole
P/S	Protected side
PSF	Pounds per square foot
PSI	Pounds per square inch
PT	Point of Tangency
PVC	Polyvinyl chloride
PVI	Point of vertical intersection
RAD.	Radius
RCP	Reinforced concrete pipe
RD.	Road
REINF.	Reinforcing
REQ'D.	Required
R.O.W.	Right of way
RS	Riverside
Rt	Right
SCHED.	Schedule
SECT.	Section
SF	Square feet
SHT.	Sheet
SIM.	Similar
SPA.	Spaces or spacing
SPRD.	Spread
SS	Stainless steel
STA	Station
STD.	Standard
STLP.	Stoplog post
STR.	Structural
SYM.	Symmetrical
SL	Slope
T/	Top of
T&B	Top and bottom
THK.	Thick
TOC	Top of concrete
TOLE	Top of levee elevation
TOS	Top of steel
T.O.W.	Top of wall
TP TP	Telephone pedestal
TTJ	Transverse tie joint
TYP.	Typical
U.S.	United States
V / VERT.	Vertical
W	Width
W/	With
WM WM	Water meter
W/O	Without
WP	Work point
WS.	Water stop
WSE	Water surface elevation
WT	Weight
WV WV	Water valve
WWF	Welded wire fabric
WWR	Welded wire reinforcement
YR.	Year

SYMBOL LEGEND

	Existing benchmark
	Down guy
	Boulder
	Valve
	Sign
	Site post
	Wood post
	Palm tree
	Mesquite tree
	Tree
	Pine tree
	Shrub
	Vehicular gate
ID DWG# TITLE SUBTITLE	Title markers
ID DWG#	Section markers
ID DWG#	Detail markers

ARCADIS US., Inc.
Texas Registered
Engineering Firm F-533

STATE OF TEXAS — KIRK LOWERY — 119594 — LICENSED — PROFESSIONAL ENGINEER — 1/28/2022

KIRK LOWERY — NEW MEXICO — 25162 — PROFESSIONAL ENGINEER — 1/28/2022

International Boundary & Water Commission
United States Section

ARCADIS

Munoz & Dannenbaum JV
SBA Approved 8(a) Joint Venture
Mercedes | McAllen | Laredo | El Paso | Houston | Fort Worth | Dallas | Austin

INTERNATIONAL BOUNDARY AND WATER COMMISSION
UNITED STATES AND MEXICO
UNITED STATES SECTION

RIO GRANDE CANALIZATION PROJECT

SUNLAND PARK LEVEE REPAIR

EAST LEVEE

For Construction

REV. NO.	SIGNATURE OF DESIGNER AND DATE	DESCRIPTION OF REVISION

Arcadis U.S. Inc.
IBWC CONTRACTOR NAME

IBM15D0001/IBM17T0010
IBWC CONTRACT/TASK ORDER

Arcadis U.S. Inc.
DESIGNED BY

USIBWC HQ-ESD 01-28-2022

ABBREVIATIONS, LEGEND AND SYMBOLS

SOLICITATION/RFP NUMBER
191BWC22R0002

CONTRACT NUMBER
191BWC22C0011

G003

26887-000-00

CAD Filename G003.dwg
SheetSet Name RIO GRANDE CANALIZATION PROJECT
Plot Style Table Name IBWC_B&W.ctb
Plot Scale 1:1
Paper Size ANSI full bleed D (22.00 x 34.00 Inches)
Plot Device DWG To PDF.pc3
Date and Time Plotted 1/27/2022 10:06 PM
Date Last Saved 1/11/2022 12:43 PM
AutoCAD Version 2013s (LMS Tech)
IBWC Border V20170817

EXISTING UTILITY INFORMATION

STATION	OFFSET	ELEVATION	UTILITY TYPE	UTILITY OWNER AND CONTACT INFORMATION	REMARKS
1666+38.00	-	5 ft min. cover	Water Line	El Paso Water (EPW) Amy Castner acastner@epwater.org (915) 594-5647 OR Al Quijano pquijano@epwater.org 1154 Hawkins Blvd. El Paso, TX 79925	12" A.C encased in steel pipe
1666+77.26	-	3.5 ft deep at JBE and drops approx. 6 ft as it approaches the levee	Fiber Optic Line	City of El Paso (CoEP) Victor Pereda PeredaVM@elpasotexas.gov (915) 472-3549 OR Basilio Ontiveros ontiverosbx@elpasotexas.gov (915) 212-7075	4" Line, attached to upstream side of Country Club Bridge and then parallel to the road
1666+83.31	-	8 ft min. cover at manhole	Fiber Optic Line	AT&T Shawn Sather OSP Planning & Engineering ss1038@att.com Cell: 915-342-3172 Ofc: 915-595-5118	4" Line, contact AT&T to verify location
1666+82.38	18.38 Rt	NA	Overhead Electric	El Paso Electric (EPE) Raul Guel (915) 543-4015 raul.guel@epelectric.com 100 N. Stanton St. Suite 171, El Paso, TX 79901	Runs above downstream edge of Country Club Bridge and continues parallel to the road
1667+17.27	29.27 Lt.	Approx. 3752	Natural Gas Line	Texas Gas Service (TGS) Saul Magallanes saul.magallanes@onegas.com (o) 915-682-7356 (c) 915-727-6131 4700 Pollard St., El Paso, TX 79930	4" steel line, attached to downstream edge of Country Club Bridge and then parallel to the road
1667+35.65	50.59 Lt.	Approx. 3750	Electrical Conduit	AT&T Shawn Sather OSP Planning & Engineering ss1038@att.com Cell: 915-342-3172 Ofc: 915-595-5118	Attached to downstream edge of Country Club Bridge and then parallel to the road
1667+35.88	50.24 Lt.	Approx. 3751	Electrical Conduit	AT&T Shawn Sather OSP Planning & Engineering ss1038@att.com Cell: 915-342-3172 Ofc: 915-595-5118	Attached to downstream edge of Country Club Bridge and then parallel to the road
1696+82.57	-	-	Overhead Electric	El Paso Electric (EPE) Raul Guel (915) 543-4015 raul.guel@epelectric.com 100 N. Stanton St. Suite 171, El Paso, TX 79901	Runs parallel with west levee and crosses the levee at 1696+82.57

EXISTING IRRIGATION STRUCTURES

STATION	OFFSET	ELEVATION	STRUCTURE NAME	STRUCTURE OWNER AND CONTACT INFORMATION	REMARKS
1667+03.85	-	3743.58	Schultz Lateral WW#35C	Elephant Buttle Irrigation District (EBID) Zach Libbin zlibbin@ebid-nm.org (575) 993-2525	30" RCP

ARCADIS US., Inc.
Texas Registered
Engineering Firm F-533

STATE OF TEXAS
KIRK LOWERY
119594
LICENSED
PROFESSIONAL ENGINEER
1/28/2022

KIRK LOWERY
NEW MEXICO
25162
PROFESSIONAL ENGINEER
1/28/2022

NOTES:

1. Elevations provided are at levee centerline unless an offset is noted.

International Boundary & Water Commission
United States Section

ARCADIS

Munoz & Dannenbaum JV
SBA Approved 8(a) Joint Venture
Marcedes | McAllen | Laredo | El Paso | Houston | Fort Worth | Dallas | Austin

INTERNATIONAL BOUNDARY AND WATER COMMISSION
UNITED STATES AND MEXICO
UNITED STATES SECTION

RIO GRANDE CANALIZATION PROJECT

SUNLAND PARK LEVEE REPAIR

WEST LEVEE

For Construction

REV NO	SIGNATURE OF DESIGNER AND DATE	DESCRIPTION OF REVISION

Arcadis U.S. Inc.
IBWC CONTRACTOR NAME

IBM15D0001/IBM17T0010
IBWC CONTRACT/TASK ORDER

Arcadis U.S. Inc.
DESIGNED BY

USIBWC HQ-ESD 01-28-2022

WEST LEVEE
EXISTING UTILITY
INFORMATION

SOLICITATION/RFP NUMBER
191BWC22R0002

CONTRACT NUMBER
191BWC22C0011

G006

26890-000-00

CAD Filename
G006.dwg

SheetSet Name
RIO GRANDE CANALIZATION PROJECT

Plot Style Table Name
IBWC_B&W.ctb

Plot Scale
1:1

Paper Size
ANSI full bleed D (22.00 x 34.00 Inches)

Plot Device
DWG To PDF.pc3

Date and Time Plotted
1/27/2022 10:07 PM

Date Last Saved
1/18/2022 3:40 PM

AutoCAD Version
20.1s (LMS Tech)

IBWC Border V20170817

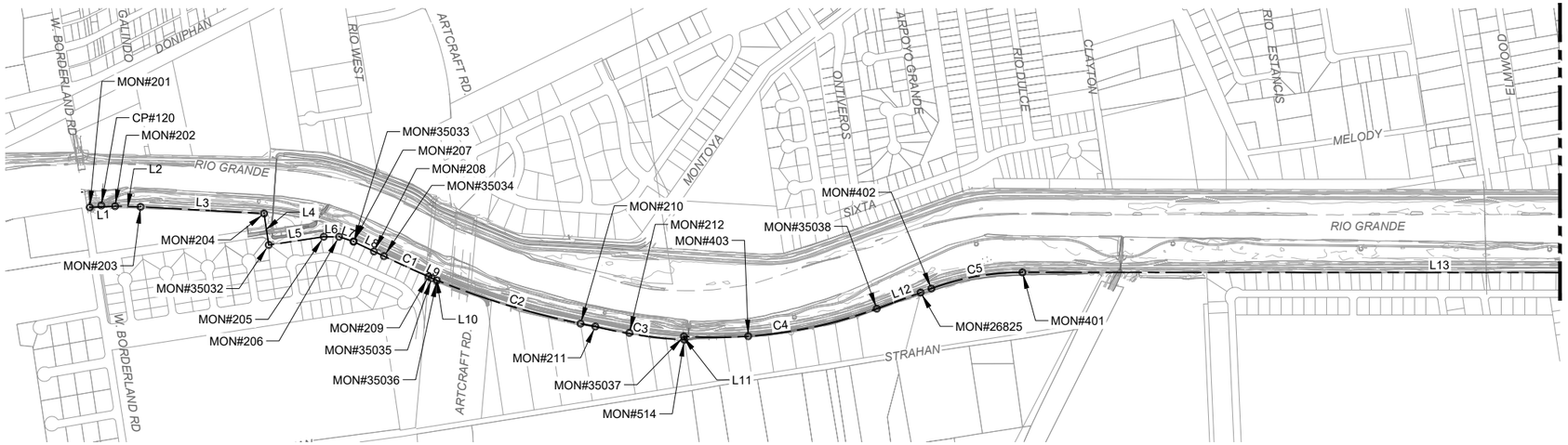

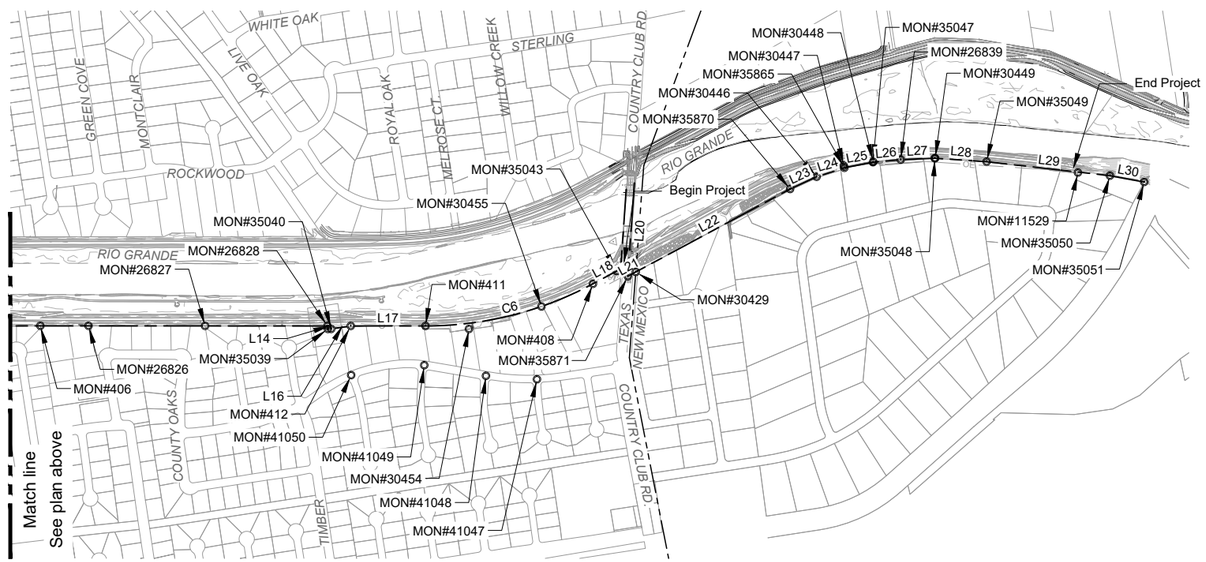

DATUM

Horizontal: All bearings and coordinates are referenced to the New Mexico Coordinate System of 1983, Central Zone (3002), NAD 83 (2011). All distances and coordinates shown are grid values and may be converted to surface values by dividing by a combined scale factor of 0.99973833. All measurements are in U.S. survey feet.

Vertical: All elevations are based on the North American Vertical Datum of 1988 (NAVD88).

WEST LEVEE R.O.W. - LINE TABLE

LINE NO.	BEG. NORTHING	BEG. EASTING	END NORTHING	END EASTING	LENGTH	BEARING
L1	322385.65	1531892.1534	322206.67	1531872.60	180.05	S6° 14' 01.10"W
L2	322206.67	1531872.6035	322028.80	1531840.32	180.78	S10° 17' 14.93"W
L3	322028.80	1531840.3190	321170.22	1531659.75	877.36	S11° 52' 35.75"W
L4	321170.22	1531659.7544	321171.58	1531433.43	226.33	N89° 39' 27.93"W
L5	321171.58	1531433.4271	320776.05	1531431.67	395.53	S0° 15' 17.00"W
L6	320776.05	1531431.6686	320669.30	1531414.95	108.05	S8° 54' 04.86"W
L7	320669.30	1531414.9495	320573.04	1531365.07	108.42	S27° 23' 20.43"W
L8	320573.04	1531365.0746	320375.76	1531230.00	239.09	S34° 23' 55.00"W
L9	320085.44	1531038.0705	320065.18	1531023.81	24.77	S35° 09' 01.85"W
L10	320065.18	1531023.8099	320030.72	1531003.28	40.11	S30° 47' 25.30"W
L11	318359.83	1530316.6785	318359.44	1530341.66	24.99	S89° 06' 33.28"E
L12	316976.74	1530326.4741	316571.91	1530408.52	413.06	S11° 27' 22.96"E
L13	315915.69	1530423.2795	310063.25	1529516.29	5922.31	S8° 48' 33.85"W
L14	310063.25	1529516.2900	310063.44	1529496.06	20.23	N89° 28' 18.57"W
L16	310042.03	1529492.7737	309910.89	1529492.65	131.14	S0° 03' 09.16"W
L17	309910.89	1529492.6534	309423.36	1529417.20	493.34	S8° 47' 51.49"W
L18	308288.94	1529522.9006	308093.10	1529592.13	207.71	S19° 28' 05.49"E
L20	307918.33	1530133.9574	308053.44	1529537.20	611.86	N77° 14' 34.08"W
L21	308053.44	1529537.1998	307997.51	1529556.95	59.32	S19° 26' 53.67"E
L22	307997.51	1529556.9500	306907.48	1529941.95	1156.02	S19° 27' 11.83"E
L23	306907.48	1529941.9500	306722.23	1529994.97	192.69	S15° 58' 17.53"E
L24	306722.23	1529994.9700	306532.02	1530025.26	192.61	S9° 02' 53.15"E
L25	306532.02	1530025.2600	306340.33	1530033.34	191.86	S2° 24' 44.75"E
L26	306340.33	1530033.3359	306156.51	1530022.00	184.17	S3° 31' 44.06"W
L27	306156.51	1530022.0000	305932.93	1529996.61	225.02	S6° 28' 41.53"W
L28	305932.93	1529996.6125	305598.31	1529922.02	342.83	S12° 34' 00.44"W
L29	305598.31	1529922.0194	304808.28	1529706.44	818.92	S15° 15' 46.44"W
L30	304808.28	1529706.4411	304591.01	1529630.62	230.12	S19° 14' 13.44"W

WEST LEVEE R.O.W. - CURVE TABLE

CURVE NO.	BEG. NORTHING	BEG. EASTING	END NORTHING	END EASTING	LENGTH	RADIUS	DELTA	TANGENT LENGTH
C1	320375.76	1531230.00	320085.44	1531038.07	348.08	5796.35	3°26'27"	348.03
C2	320030.72	1531003.28	318969.62	1530506.63	1173.58	5796.35	11°36'02"	1171.58
C3	318969.62	1530506.63	318359.83	1530316.68	639.67	3337.06	10°58'58"	638.69
C4	318359.44	1530341.66	316976.74	1530326.47	1393.03	3312.13	24°05'52"	1382.78
C5	316571.91	1530408.52	315915.69	1530423.28	659.80	1869.42	20°13'20"	656.38
C6	309423.36	1529417.20	308288.94	1529522.90	1150.99	2331.09	28°17'25"	1139.33

0 250' 1"=500' 1000'

ARCADIS US., Inc.
Texas Registered
Engineering Firm F-533

STATE OF TEXAS
KIRK LOWERY
119594
LICENSED
PROFESSIONAL ENGINEER
1/28/2022

KIRK LOWERY
NEW MEXICO
25162
PROFESSIONAL ENGINEER
1/28/2022

International Boundary & Water Commission
United States Section

ARCADIS

Munoz & Dannenbaum JV
SBA Approved 8(a) Joint Venture
Marcedes | McAllen | Laredo | El Paso | Houston | Fort Worth | Dallas | Austin

INTERNATIONAL BOUNDARY AND WATER COMMISSION
UNITED STATES AND MEXICO
UNITED STATES SECTION

RIO GRANDE CANALIZATION PROJECT

SUNLAND PARK LEVEE REPAIR

WEST LEVEE

For Construction

REV NO.	SIGNATURE OF DESIGNER AND DATE	DESCRIPTION OF REVISION

Arcadis U.S. Inc.
IBWC CONTRACTOR NAME

IBM15D0001/IBM17T0010
IBWC CONTRACT/TASK ORDER

Arcadis U.S. Inc.
DESIGNED BY

USIBWC HQ-ESD 01-28-2022

WEST LEVEE SURVEY CONTROL - EXISTING R.O.W. LINE AND CURVE TABLES

SOLICITATION/RFP NUMBER
191BWC22R0002

CONTRACT NUMBER
191BWC22C0011

G107

26897-000-00

CAD Filename
G107.dwg

SheetSet Name
RIO GRANDE CANALIZATION PROJECT

Plot Style Table Name
IBWC_B&W.ctb

Plot Scale
1:1

Paper Size
ANSI full bleed D (22.00 x 34.00 Inches)

Plot Device
DWG To PDF.pc3

Date and Time Plotted
1/27/2022 10:12 PM

Date Last Saved
1/18/2022 3:43 PM

AutoCAD Version
20.1s (LMS Tech)

IBWC Border V20170817

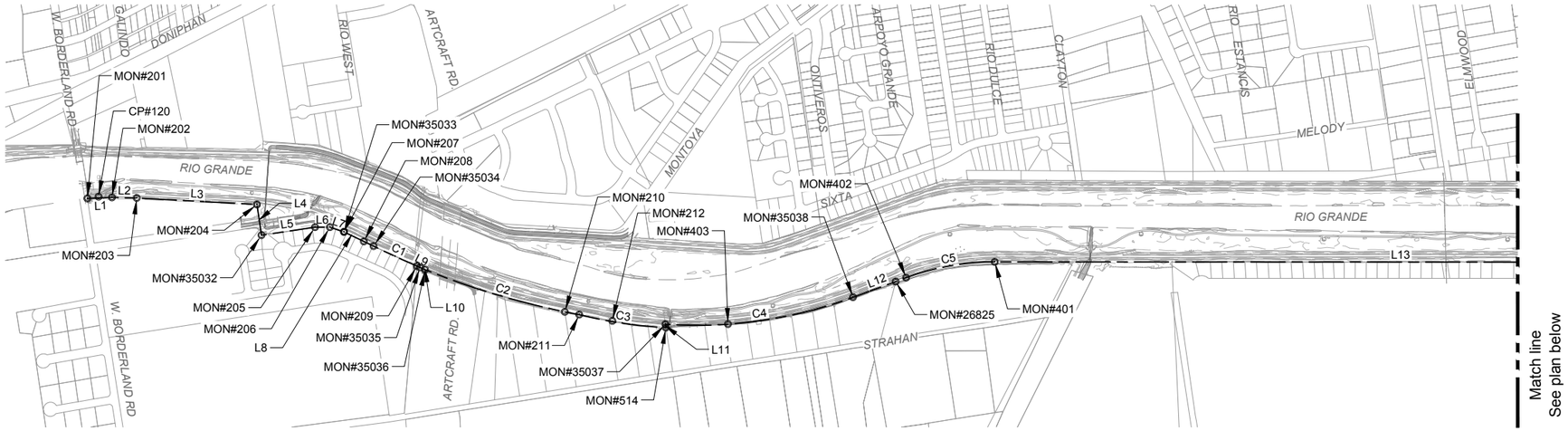

Match line
See plan below

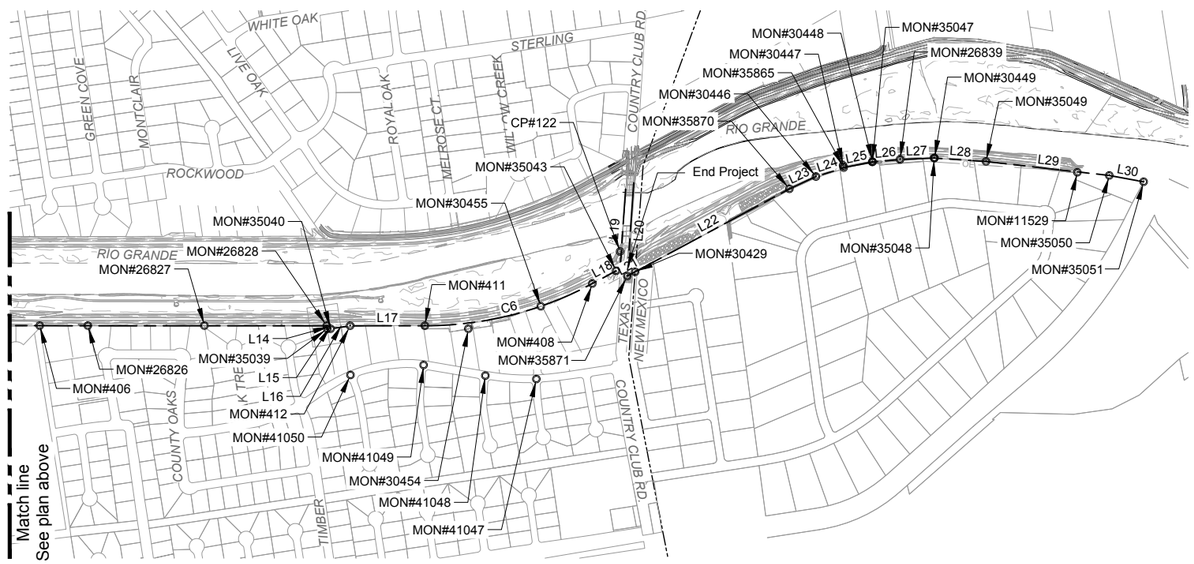

Match line
See plan above

DATUM

Horizontal: All bearings and coordinates are referenced to the New Mexico Coordinate System of 1983, Central Zone (3002), NAD 83 (2011). All distances and coordinates shown are grid values and may be converted to surface values by dividing by a combined scale factor of 0.99973833. All measurements are in U.S. survey feet.

Vertical: All elevations are based on the North American Vertical Datum of 1988 (NAVD88).

WEST LEVEE R.O.W. - LINE TABLE

LINE NO.	BEG. NORTHING	BEG. EASTING	END NORTHING	END EASTING	LENGTH	BEARING
L1	322385.65	1531892.15	322206.67	1531872.60	180.05	S6° 14' 01.10"W
L2	322206.67	1531872.60	322028.80	1531840.32	180.78	S10° 17' 14.93"W
L3	322028.80	1531840.32	321170.22	1531659.75	877.36	S11° 52' 35.75"W
L4	321170.22	1531659.75	321171.58	1531433.43	226.33	N89° 39' 27.93"W
L5	321171.58	1531433.43	320776.05	1531431.67	395.53	S0° 15' 17.00"W
L6	320776.05	1531431.67	320669.30	1531414.95	108.05	S8° 54' 04.86"W
L7	320669.30	1531414.95	320573.04	1531365.07	108.42	S27° 23' 20.43"W
L8	320573.04	1531365.07	320375.76	1531230.00	239.09	S34° 23' 55.00"W
L9	320085.44	1531038.07	320065.18	1531023.81	24.77	S35° 09' 01.85"W
L10	320065.18	1531023.81	320030.72	1531003.28	40.11	S30° 47' 25.30"W
L11	318359.83	1530316.68	318359.44	1530341.66	24.99	S89° 06' 33.28"E
L12	316976.74	1530326.47	316571.91	1530408.52	413.06	S11° 27' 22.96"E
L13	315915.69	1530423.28	310063.25	1529516.29	5922.31	S8° 48' 33.85"W
L14	310063.25	1529516.29	310063.44	1529496.06	20.23	N89° 28' 18.57"W
L15	310063.44	1529496.06	310042.03	1529492.77	21.66	S8° 43' 50.96"W
L16	310042.03	1529492.77	309910.89	1529492.65	131.14	S0° 03' 09.16"W
L17	309910.89	1529492.65	309423.36	1529417.20	493.34	S8° 47' 51.49"W
L18	308288.94	1529522.90	308093.10	1529592.13	207.71	S19° 28' 05.49"E
L19	308093.10	1529592.13	307977.90	1530100.29	521.06	S77° 13' 35.82"E
L20	307918.33	1530133.96	308053.44	1529537.20	611.86	N77° 14' 34.08"W
L21	308053.44	1529537.20	307997.51	1529556.95	59.32	S19° 26' 53.67"E
L22	307997.51	1529556.95	306907.48	1529941.95	1156.02	S19° 27' 11.83"E
L23	306907.48	1529941.95	306722.23	1529994.97	192.69	S15° 58' 17.53"E
L24	306722.23	1529994.97	306532.02	1530025.26	192.61	S9° 02' 53.15"E
L25	306532.02	1530025.26	306340.33	1530033.34	191.86	S2° 24' 44.75"E
L26	306340.33	1530033.34	306156.51	1530022.00	184.17	S3° 31' 44.06"W
L27	306156.51	1530022.00	305932.93	1529996.61	225.02	S6° 28' 41.53"W
L28	305932.93	1529996.61	305598.31	1529922.02	342.83	S12° 34' 00.44"W
L29	305598.31	1529922.02	304808.28	1529706.44	818.92	S15° 15' 46.44"W
L30	304808.28	1529706.44	304591.01	1529630.62	230.12	S19° 14' 13.44"W

WEST LEVEE R.O.W. - CURVE TABLE

CURVE NO.	BEG. NORTHING	BEG. EASTING	END NORTHING	END EASTING	LENGTH	RADIUS	DELTA	TANGENT LENGTH
C1	320375.76	1531230.00	320085.44	1531038.07	348.08	5796.35	3°26'27"	348.03
C2	320030.72	1531003.28	318969.62	1530506.63	1173.58	5796.35	11°36'02"	1171.58
C3	318969.62	1530506.63	318359.83	1530316.68	639.67	3337.06	10°58'58"	638.69
C4	318359.44	1530341.66	316976.74	1530326.47	1393.03	3312.13	24°05'52"	1382.78
C5	316571.91	1530408.52	315915.69	1530423.28	659.80	1869.42	20°13'20"	656.38
C6	309423.36	1529417.20	308288.94	1529522.90	1150.99	2331.09	28°17'25"	1139.33

0 250' 1"=500' 1000'

STATE OF TEXAS REGISTERED CHRISTIAN A. CLAUSEN 5511 PROFESSIONAL LAND SURVEYOR
DATE: 08-14-2019

International Boundary & Water Commission
United States Section

ARCADIS

Munoz & Dannenbaum JV
SBA Approved 8(a) Joint Venture
Marcedes | McAllen | Laredo | El Paso | Houston | Fort Worth | Dallas | Austin

INTERNATIONAL BOUNDARY AND WATER COMMISSION
UNITED STATES AND MEXICO
UNITED STATES SECTION

RIO GRANDE CANALIZATION PROJECT

SUNLAND PARK LEVEE REPAIR

WEST LEVEE

For Construction

REV. NO.	SIGNATURE OF DESIGNER AND DATE	DESCRIPTION OF REVISION

Arcadis U.S. Inc.
IBWC CONTRACTOR NAME

IBM15D0001/IBM17T0010
IBWC CONTRACT/TASK ORDER

Arcadis U.S. Inc.
DESIGNED BY

USIBWC HQ-ESD 08-14-2019

SURVEY CONTROL - EXISTING R.O.W. LINE AND CURVE TABLES

SOLICITATION/RFP NUMBER
191BWC22R0002

CONTRACT NUMBER
191BWC22C0011

26803-000-00

CAD Filename G101.dwg

SheetSet Name RIO GRANDE CANALIZATION PROJECT

Plot Style Table Name IBWC_B&W.ctb

Plot Scale 1:1

Paper Size ANSI full bleed D (22.00 x 34.00 Inches)

Plot Device DWG To PDF.pc3

Date and Time Plotted 8/14/2019 4:44 PM

Date Last Saved 8/13/2019 4:18 PM

AutoCAD Version 22.0s (LMS Tech)

IBWC Border V20170817

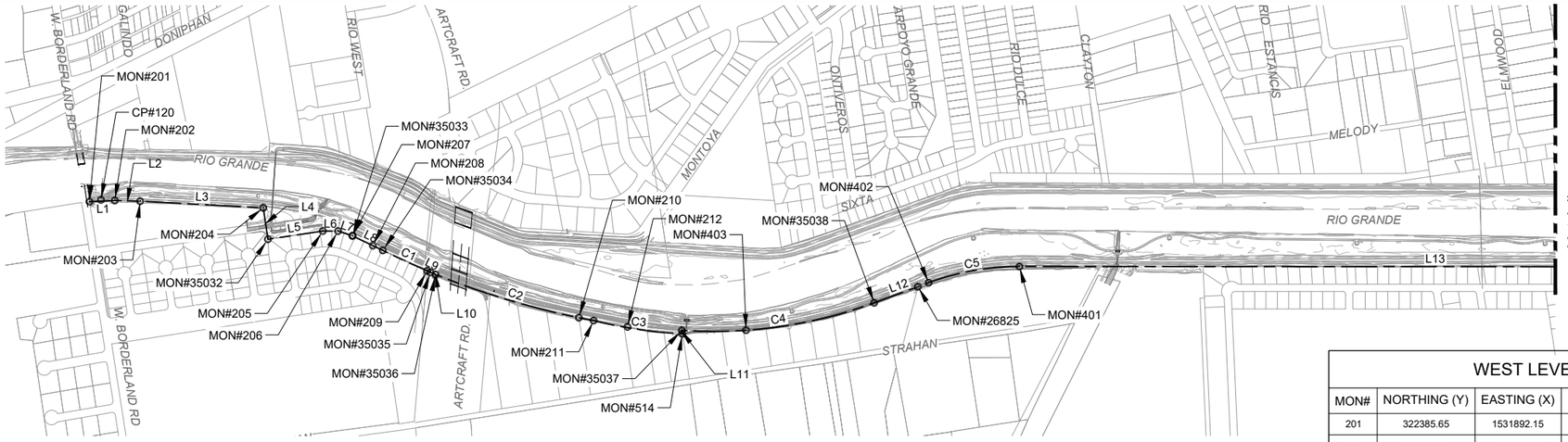

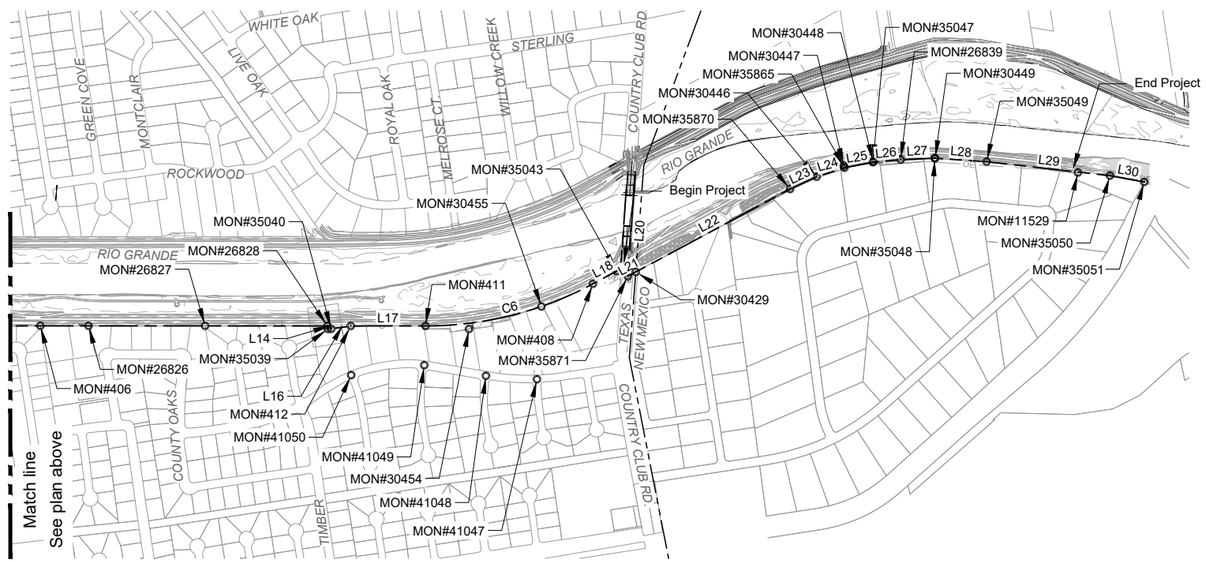

WEST LEVEE R.O.W. SURVEY MONUMENTS

MON#	NORTHING (Y)	EASTING (X)	DESCRIPTION
201	322385.65	1531892.15	Found Chiseled x in concrete
202	322206.67	1531872.60	Found 3" Galvanized Iron pipe
203	322028.80	1531840.32	Found 2" Iron pipe with aluminum cap stamped "US IBWC R.O.W."
204	321170.22	1531659.75	Found 2" Iron pipe with aluminum cap stamped "US IBWC R.O.W."
205	320776.05	1531431.67	Found 2" Iron pipe with aluminum cap stamped "US IBWC R.O.W."
206	320669.30	1531414.95	Found 2" Iron pipe with aluminum cap stamped "US IBWC R.O.W."
207	320572.18	1531366.61	Found rebar with damaged aluminum cap
208	320440.30	1531274.19	Found 3" G.I.P.
209	320085.44	1531038.07	Found #4 rebar with cap stamped "B&A inc"
210	319069.95	1530543.01	Found PK nail stamped "wall In"
211	318969.62	1530506.63	Found 2 1/2" Iron pipe with aluminum cap stamped "US IBWC R.O.W."
212	318737.82	1530425.13	Found 2 1/2" Iron pipe with aluminum cap stamped "US IBWC R.O.W."
401	315915.69	1530423.28	Found 1 3/4" Galvanized iron pipe stamped "PC IB&WC R.O.W."
402	316571.91	1530408.52	Found 2" Galvanized iron pipe, stamped "PC IB&WC R.O.W."
403	317907.99	1530272.93	Found 2 1/2" G.I.P., stamped "POC IB&WC R.O.W."
406	311934.95	1529806.76	Found 3" G.I.P.
408	308288.94	1529522.90	Found 2" Rebar with aluminum cap stamped "US IBWC R.O.W."
411	309423.36	1529417.20	Found 2" Aluminum cap stamped "US IBWC R.O.W."
412	309910.89	1529492.65	Found 2" Aluminum cap stamped "US IBWC R.O.W."
514	318359.83	1530316.68	Found 2" Aluminum cap stamped "US IBWC R.O.W."
11529	305013.94	1529758.94	Found 2 1/2" Iron pipe, stamped "1698+06"
26825	316651.48	1530392.28	Found 2" Aluminum cap stamped "US IBWC R.O.W."
26826	311620.85	1529758.12	Found 2" Iron pipe with aluminum cap
26827	310860.92	1529640.26	Found 2 1\2" Iron Pipe
26828	310063.25	1529516.29	Found 2 1\2" Iron Pipe
26839	306156.51	1530022.00	Found 3" Aluminum cap on concrete stamped
30429	307997.51	1529556.95	Found 1 1/2" Galvanized iron pipe
30446	306722.23	1529994.97	Found 2" Iron pipe stamped "US IBWC R.O.W."
30447	306534.14	1530039.73	Found 2 1/2" Iron pipe stamped "1682+81"
30448	306338.27	1530035.29	Found 2 1/2" Iron pipe
30449	305930.74	1529996.35	Found 2 1/2" Iron pipe
30454	309142.89	1529353.37	Found 1 3/4" G.I.P. stamped "PI IB&WC R.O.W."
30455	308647.70	1529427.23	Found 1" Iron rod
35032	321171.58	1531433.43	* 5/8" Rebar W/Alum. Cap stamped "CA Clausen TX5511 NM16467 IBWC ROW 2018 FXSA"
35033	320573.04	1531365.07	* 5/8" Rebar W/Alum. Cap stamped "CA Clausen TX5511 NM16467 IBWC ROW 2018 FXSA"
35034	320375.76	1531230.00	* 5/8" Rebar W/Alum. Cap stamped "CA Clausen TX5511 NM16467 IBWC ROW 2018 FXSA"
35035	320065.18	1531023.81	* 5/8" Rebar W/Alum. Cap stamped "CA Clausen TX5511 NM16467 IBWC ROW 2018 FXSA"
35036	320030.72	1531003.28	* 5/8" Rebar W/Alum. Cap stamped "CA Clausen TX5511 NM16467 IBWC ROW 2018 FXSA"
35037	318359.44	1530341.66	* 5/8" Rebar W/Alum. Cap stamped "CA Clausen TX5511 NM16467 IBWC ROW 2018 FXSA"
35038	316976.74	1530326.47	* 5/8" Rebar W/Alum. Cap stamped "CA Clausen TX5511 NM16467 IBWC ROW 2018 FXSA"
35039	310063.44	1529496.06	* 5/8" Rebar W/Alum. Cap stamped "CA Clausen TX5511 NM16467 IBWC ROW 2018 FXSA"

* Monument to be set

WEST LEVEE R.O.W. SURVEY MONUMENTS

MON#	NORTHING (Y)	EASTING (X)	DESCRIPTION
35040	310042.03	1529492.77	* 5/8" Rebar W/Alum. Cap stamped "CA Clausen TX5511 NM16467 IBWC ROW 2018 FXSA"
35043	308121.13	1529582.22	* 5/8" Rebar W/Alum. Cap stamped "CA Clausen TX5511 NM16467 IBWC ROW 2018 FXSA"
35047	306340.33	1530033.34	* 5/8" Rebar W/Alum. Cap stamped "CA Clausen TX5511 NM16467 IBWC ROW 2018 FXSA"
35048	305932.93	1529996.61	23ap stamped "CA Clausen TX5511 NM16467 IBWC R.O.W 2018 FXSA"
35049	305598.31	1529922.02	* 5/8" Rebar W/Alum. Cap stamped "CA Clausen TX5511 NM16467 IBWC R.O.W 2018 FXSA"
35050	304808.28	1529706.44	* 5/8" Rebar W/Alum. Cap stamped "CA Clausen TX5511 NM16467 IBWC R.O.W 2018 FXSA"
35051	304591.01	1529630.62	* 5/8" Rebar W/Alum. Cap stamped "CA Clausen TX5511 NM16467 IBWC R.O.W 2018 FXSA"
35865	306532.02	1530025.26	Found 5/8" rebar
35870	306907.48	1529941.95	Found 2" Iron pipe
35871	308053.44	1529537.20	* 5/8" Rebar W/Alum. Cap stamped "CA Clausen TX5511 NM16467 IBWC R.O.W 2018 FXSA"
41047	308750.34	1528957.00	Found city monument
41048	309079.72	1529030.86	Found city monument
41049	309471.05	1529162.30	Found city monument
41050	309957.97	1529171.52	Found city monument

WEST LEVEE R.O.W. SURVEY CONTROL POINTS

CP#	NORTHING(Y)	EASTING(X)	ELEVATION	DESCRIPTION
120	322302.94	1531892.41	3765.03	Found iron rebar with FXSA Cap

ARCADIS US., Inc.
Texas Registered
Engineering Firm F-533

STATE OF TEXAS — KIRK LOWERY — 119594 — LICENSED PROFESSIONAL ENGINEER
1/28/2022

KIRK LOWERY — NEW MEXICO — 25162 — PROFESSIONAL ENGINEER
1/28/2022

DATUM

Horizontal: All bearings and coordinates are referenced to the New Mexico Coordinate System of 1983, Central Zone (3002), NAD 83 (2011). All distances and coordinates shown are grid values and may be converted to surface values by dividing by a combined scale factor of 0.99973833. All measurements are in U.S. survey feet.

Vertical: All elevations are based on the North American Vertical Datum of 1988 (NAVD88).

0 250' 1"=500' 1000'

International Boundary & Water Commission
United States Section

ARCADIS

Munoz & Dannenbaum JV
SBA Approved 8(a) Joint Venture
Marcedes | McAllen | Laredo | El Paso | Houston | Fort Worth | Dallas | Austin

INTERNATIONAL BOUNDARY AND WATER COMMISSION
UNITED STATES AND MEXICO
UNITED STATES SECTION

RIO GRANDE CANALIZATION PROJECT

SUNLAND PARK LEVEE REPAIR

WEST LEVEE

For Construction

REV NO.	SIGNATURE OF DESIGNER AND DATE	DESCRIPTION OF REVISION

Arcadis U.S. Inc.
IBWC CONTRACTOR NAME

IBM15D0001/IBM17T0010
IBWC CONTRACT/TASK ORDER

Arcadis U.S. Inc.
DESIGNED BY

USIBWC HQ-ESD 01-28-2022

WEST LEVEE SURVEY CONTROL - EXISTING BENCHMARKS, CONTROL POINTS AND MONUMENTS

SOLICITATION/RFP NUMBER
191BWC22R0002

CONTRACT NUMBER
191BWC22C0011

G108

26898-000-00

CAD Filename G108.dwg
SheetSet Name RIO GRANDE CANALIZATION PROJECT
Plot Style Table Name IBWC_B&W.ctb
Plot Scale 1:1
Paper Size ANSI full bleed D (22.00 x 34.00 Inches)
Plot Drive\ps DWG To PDF.pc3
Date and Time Plotted 1/27/2022 10:17 PM
Date Last Saved 1/18/2022 3:46 PM
AutoCAD Version 20.1s (LMS Tech)

IBWC Border V20170817

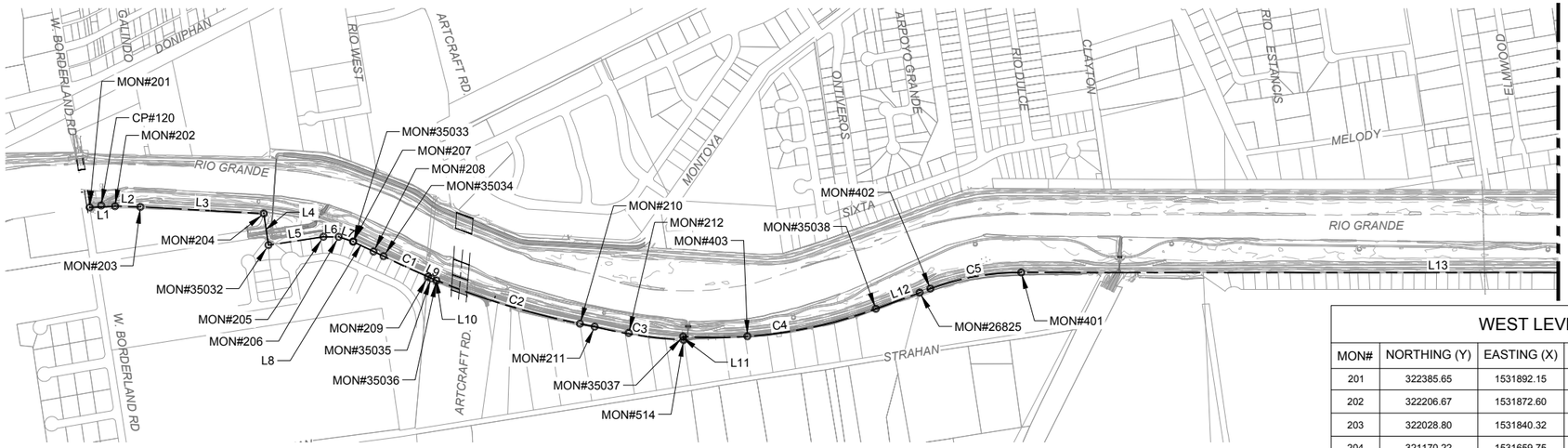

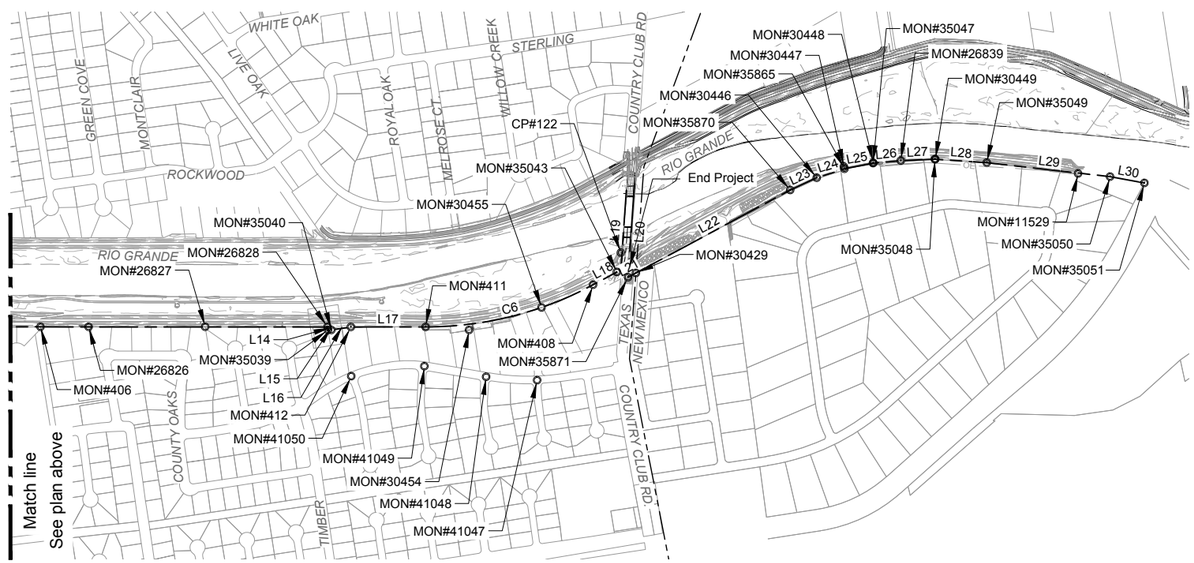

DATUM

Horizontal: All bearings and coordinates are referenced to the New Mexico Coordinate System of 1983, Central Zone (3002), NAD 83 (2011). All distances and coordinates shown are grid values and may be converted to surface values by dividing by a combined scale factor of 0.99973833. All measurements are in U.S. survey feet.

Vertical: All elevations are based on the North American Vertical Datum of 1988 (NAVD88).

WEST LEVEE R.O.W. SURVEY MONUMENTS

MON#	NORTHING (Y)	EASTING (X)	DESCRIPTION
201	322385.65	1531892.15	Found Chiseled "X" in concrete
202	322206.67	1531872.60	Found 3" Galvanized Iron pipe
203	322028.80	1531840.32	Found 2" Iron pipe with aluminum cap stamped "US IBWC R.O.W."
204	321170.22	1531659.75	Found 2" Iron pipe with aluminum cap stamped "US IBWC R.O.W."
205	320776.05	1531431.67	Found 2" Iron pipe with aluminum cap stamped "US IBWC R.O.W."
206	320669.30	1531414.95	Found 2" Iron pipe with aluminum cap stamped "US IBWC R.O.W."
207	320572.18	1531366.61	Found rebar with damaged aluminum cap
208	320440.30	1531274.19	Found 3" G.I.P.
209	320085.44	1531038.07	Found #4 rebar with cap stamped "B&A inc"
210	319069.95	1530543.01	Found PK nail stamped "wall In"
211	318969.62	1530506.63	Found 2 1/2" Iron pipe with aluminum cap stamped "US IBWC R.O.W."
212	318737.82	1530425.13	Found 2 1/2" Iron pipe with aluminum cap stamped "US IBWC R.O.W."
401	315915.69	1530423.28	Found 1 3/4" Galvanized iron pipe stamped "PC IB&WC R.O.W."
402	316571.91	1530408.52	Found 2" Galvanized iron pipe, stamped "PC IB&WC R.O.W."
403	317907.99	1530272.93	Found 2 1/2" G.I.P., stamped "POC IB&WC R.O.W."
406	311934.95	1529806.76	Found 3" G.I.P.
408	308288.94	1529522.90	Found 2" Rebar with aluminum cap stamped "US IBWC R.O.W."
411	309423.36	1529417.20	Found 2" Aluminum cap stamped "US IBWC R.O.W."
412	309910.89	1529492.65	Found 2" Aluminum cap stamped "US IBWC R.O.W."
514	318359.83	1530316.68	Found 2" Aluminum cap stamped "US IBWC R.O.W."
11529	305013.94	1529758.94	Found 2 1/2" Iron pipe, stamped "1698+06"
26825	316651.48	1530392.28	Found 2" Aluminum cap stamped "US IBWC R.O.W."
26826	311620.85	1529758.12	Found 2" Iron pipe with aluminum cap
26827	310860.92	1529640.26	Found 2 1/2" Iron pipe
26828	310063.25	1529516.29	Found 2 1/2" Iron pipe
26839	306156.51	1530022.00	Found 3" Aluminum cap on concrete stamped
30429	307997.51	1529556.95	Found 1 1/2" Galvanized iron pipe
30446	306722.23	1529994.97	Found 2" Iron pipe stamped "US IBWC R.O.W."
30447	306534.14	1530039.73	Found 2 1/2" Iron pipe stamped "1682+81"
30448	306338.27	1530035.29	Found 2 1/2" Iron pipe
30449	305930.74	1529996.35	Found 2 1/2" Iron pipe
30454	309142.89	1529353.37	Found 1 3/4" G.I.P. stamped "PI IB&WC R.O.W."
30455	308647.70	1529427.23	Found 1" Iron rod
35032	321171.58	1531433.43	* 5/8" Rebar W/Alum. Cap stamped "CA Clausen TX5511 NM16467 IBWC R.O.W 2018 FXSA"
35033	320573.04	1531365.07	* 5/8" Rebar W/Alum. Cap stamped "CA Clausen TX5511 NM16467 IBWC R.O.W 2018 FXSA"
35034	320375.76	1531230.00	* 5/8" Rebar W/Alum. Cap stamped "CA Clausen TX5511 NM16467 IBWC R.O.W 2018 FXSA"
35035	320065.18	1531023.81	* 5/8" Rebar W/Alum. Cap stamped "CA Clausen TX5511 NM16467 IBWC R.O.W 2018 FXSA"
35036	320030.72	1531003.28	* 5/8" Rebar W/Alum. Cap stamped "CA Clausen TX5511 NM16467 IBWC R.O.W 2018 FXSA"
35037	318359.44	1530341.66	* 5/8" Rebar W/Alum. Cap stamped "CA Clausen TX5511 NM16467 IBWC R.O.W 2018 FXSA"
35038	316976.74	1530326.47	* 5/8" Rebar W/Alum. Cap stamped "CA Clausen TX5511 NM16467 IBWC R.O.W 2018 FXSA"
35039	310063.44	1529496.06	* 5/8" Rebar W/Alum. Cap stamped "CA Clausen TX5511 NM16467 IBWC R.O.W 2018 FXSA"

* Monument to be set

0 250' 1"=500' 1000'

WEST LEVEE R.O.W. SURVEY MONUMENTS

MON#	NORTHING (Y)	EASTING (X)	DESCRIPTION
35040	310042.03	1529492.77	* 5/8" Rebar W/Alum. Cap stamped "CA Clausen TX5511 NM16467 IBWC R.O.W 2018 FXSA"
35043	308121.13	1529582.22	* 5/8" Rebar W/Alum. Cap stamped "CA Clausen TX5511 NM16467 IBWC R.O.W 2018 FXSA"
35047	306340.33	1530033.34	* 5/8" Rebar W/Alum. Cap stamped "CA Clausen TX5511 NM16467 IBWC R.O.W 2018 FXSA"
35048	305932.93	1529996.61	* 5/8" Rebar W/Alum. Cap stamped "CA Clausen TX5511 NM16467 IBWC R.O.W 2018 FXSA"
35049	305598.31	1529922.02	* 5/8" Rebar W/Alum. Cap stamped "CA Clausen TX5511 NM16467 IBWC R.O.W 2018 FXSA"
35050	304808.28	1529706.44	* 5/8" Rebar W/Alum. Cap stamped "CA Clausen TX5511 NM16467 IBWC R.O.W 2018 FXSA"
35051	304591.01	1529630.62	* 5/8" Rebar W/Alum. Cap stamped "CA Clausen TX5511 NM16467 IBWC R.O.W 2018 FXSA"
35865	306532.02	1530025.26	Found 5/8" rebar
35870	306907.48	1529941.95	Found 2" Iron pipe
35871	308053.44	1529537.20	* 5/8" Rebar W/Alum. Cap stamped "CA Clausen TX5511 NM16467 IBWC R.O.W 2018 FXSA"
41047	308750.34	1528957.00	Found city monument
41048	309079.72	1529030.86	Found city monument
41049	309471.05	1529162.30	Found city monument
41050	309957.97	1529171.52	Found city monument

WEST LEVEE R.O.W. SURVEY CONTROL POINTS

CP#	NORTHING (Y)	EASTING (X)	ELEVATION	DESCRIPTION
120	322302.94	1531892.41	3765.03	Found iron rebar with FXSA Cap
122	308075.60	1529704.41	3755.27	Found iron rebar with FXSA Cap

STATE OF TEXAS REGISTERED CHRISTIAN A. CLAUSEN 5511 PROFESSIONAL LAND SURVEYOR
DATE: 08-14-2019

CHRISTIAN A. CLAUSEN NEW MEXICO 16467 LICENSED PROFESSIONAL SURVEYOR
DATE: 08-14-2019

International Boundary & Water Commission
United States Section

ARCADIS

Munoz & Dannenbaum JV
SBA Approved 8(a) Joint Venture
Marcedes | McAllen | Laredo | El Paso | Houston | Fort Worth | Dallas | Austin

INTERNATIONAL BOUNDARY AND WATER COMMISSION
UNITED STATES AND MEXICO
UNITED STATES SECTION

RIO GRANDE CANALIZATION PROJECT

SUNLAND PARK LEVEE REPAIR

WEST LEVEE

For Construction

REV NO	ESIGNATURE OF DESIGNER AND DATE	DESCRIPTION OF REVISION

Arcadis U.S. Inc.
IBWC CONTRACTOR NAME

IBM15D0001/IBM17T0010
IBWC CONTRACT/TASK ORDER

Arcadis U.S. Inc.
DESIGNED BY

USIBWC HQ-ESD 08-14-2019

SURVEY CONTROL - EXISTING BENCHMARKS, CONTROL POINTS AND MONUMENTS

SOLICITATION/RFP NUMBER
191BWC22R0002

CONTRACT NUMBER
191BWC22C0011

26804-000-00

CAD Filename G102.dwg
SheetSet Name RIO GRANDE CANALIZATION PROJECT
Plot Style Table Name IBWC_B&W.ctb
Plot Scale 1:1
Paper Size ANSI full bleed D (22.00 x 34.00 Inches)
Plot Device DWG To PDF.pc3
Date and Time Plotted 8/14/2019 4:54 PM
Date Last Saved 8/13/2019 5:18 PM
AutoCAD Version 22.0s (LMS Tech)

IBWC Border V20170817

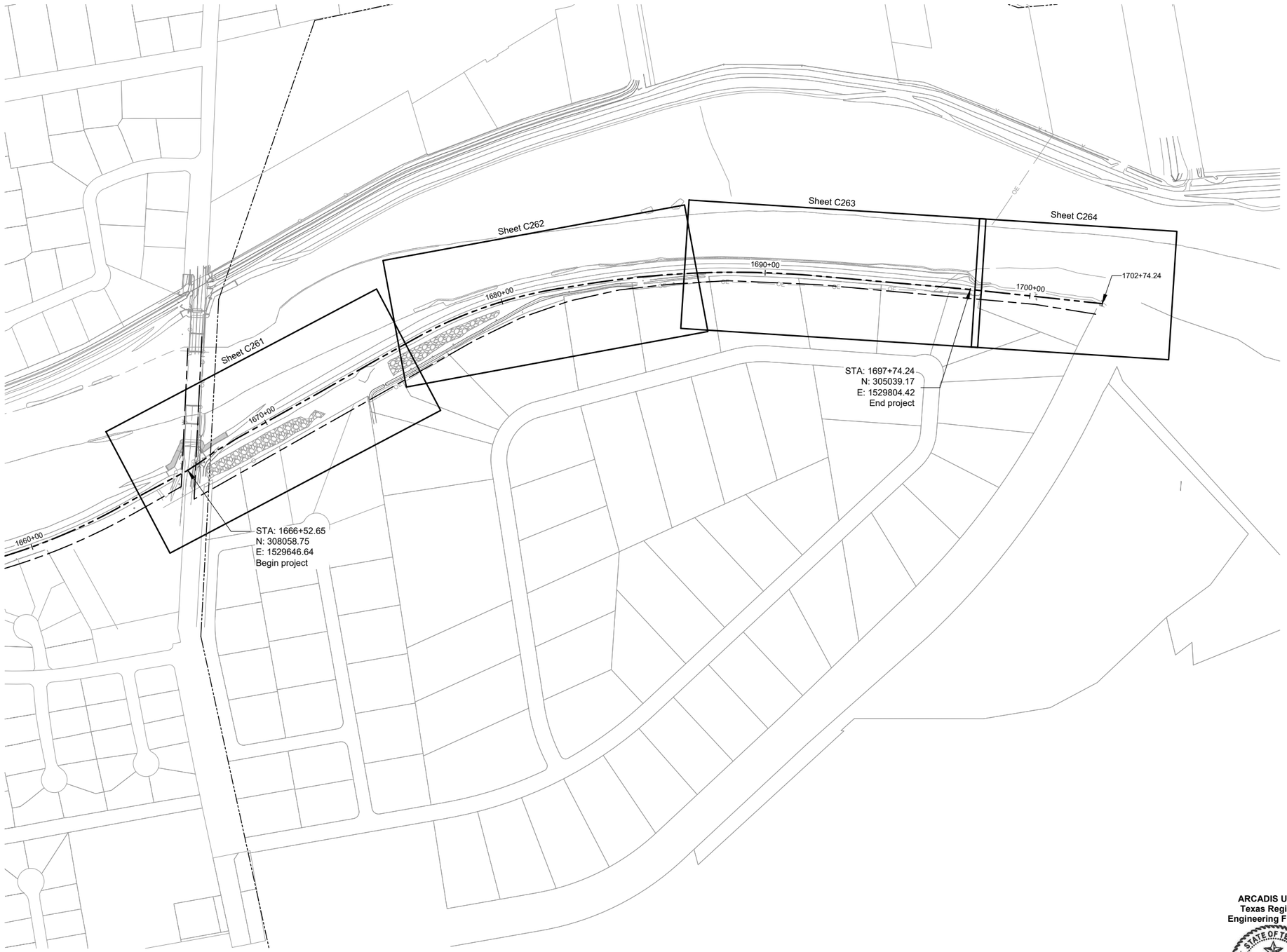

0 100' 1"=200' 400'

ARCADIS US., Inc.
Texas Registered
Engineering Firm F-533

STATE OF TEXAS — KIRK LOWERY — 119594 — LICENSED PROFESSIONAL ENGINEER — 1/28/2022

KIRK LOWERY — NEW MEXICO — 25162 — PROFESSIONAL ENGINEER — 1/28/2022

International Boundary & Water Commission
United States Section

ARCADIS

Munoz & Dannenbaum JV
SBA Approved 8(a) Joint Venture
Marcedes | McAllen | Laredo | El Paso | Houston | Fort Worth | Dallas | Austin

INTERNATIONAL BOUNDARY AND WATER COMMISSION
UNITED STATES AND MEXICO
UNITED STATES SECTION

RIO GRANDE CANALIZATION PROJECT

SUNLAND PARK LEVEE REPAIR

WEST LEVEE

For Construction

REV. NO.	SIGNATURE OF DESIGNER AND DATE	DESCRIPTION OF REVISION

Arcadis U.S. Inc.
IBWC CONTRACTOR NAME

IBM15D0001/IBM17T0010
IBWC CONTRACT/TASK ORDER

Arcadis U.S. Inc.
DESIGNED BY

USIBWC HQ-ESD 01-28-2022

WEST LEVEE PROJECT
LAYOUT KEY PLAN
STA: 1666+52.65 TO
1702+74.24

SOLICITATION/RFP NUMBER
191BWC22R0002

CONTRACT NUMBER
191BWC22C0011

G303

26906-000-00

CAD Filename
G303.dwg

SheetSet Name
RIO GRANDE CANALIZATION PROJECT

Plot Style Table Name
IBWC_B&W.ctb

Plot Scale
1:1

Paper Size
ANSI full Bleed D (22.00 x 34.00 Inches)

Plot Device
DWG To PDF.pc3

Date and Time Plotted
1/27/2022 10:06 PM

Date Last Saved
1/28/2022 6:08 PM

AutoCAD Version
20.1s (LMS Tech)

IBWC Border V20170817

PRIMARY CONTROL POINTS/BENCHMARKS

CP#	NORTHING(Y)	EASTING(X)	ELEVATION	LATITUDE	LONGITUDE	DESCRIPTION
120	322302.94	1531892.41	3765.03	31° 53' 08.22" N	106° 35' 58.78" W	Set 5/8" rebar with Cap stamped "FXS RPLS 2198"
122	308075.60	1529704.41	3755.27	31° 50' 47.35" N	106° 36' 23.61" W	Found 5/8" rebar with Cap stamped "CLAUSEN TX#5511 NM#16467"
123	291162.01	1543086.13	3752.68	31° 48' 00.37" N	106° 33' 47.90" W	Set 5/8" rebar with Cap stamped "FXS RPLS 2198"

LINE	BEARING	DISTANCE
L14	S 22°28'51" E	31.19'
L15	S 33°28'43" W	38.31'
L16	N 89°57'04" E	58.76'
L17	S 41°38'15" W	107.42'
L18	S 06°03'08" W	241.19'
L19	S 01°27'21" W	240.09'
L20	S 03°55'04" E	284.09'
L21	S 19°31'00" E	229.23'
L22	S 17°00'01" E	99.98'
L23	N 89°28'19" W	20.23
L24	S 08°43'51" W	21.66'
L25	S 00°03'09" W	131.14'
L26	S 01°12'27" E	272.46'
L27	N 88°48'30" E	38.65'
L28	S 19°28'05" E	177.99'
L29	S 19°26'57" E	59.31'

CURVE	RADIUS	ARC LENGTH	CHORD LENGTH	CHORD BEARING	DELTA ANGLE
C8	2331.05'	1150.99'	1139.34'	S 05°19'24" E	28°17'26"

Possible Encroachment Table

Number	Type of encroachment	Ownership information
8	Rock wall fence	52, 110, 111, 112, 115, 116, 117, 118, 119, 20, 121, 126
9	Wire fence	122
10	Iron fence	LARRY & JEANNETTE LOCKARD VOL 2308 PG 1901 VERONICA K. CALLAGHAN VOL 3141 PG 1820 JAMES T. LEMASTER Doc. 20160069248
11	Landscape	SAMUEL K. & DANYE L. CREIGHTON Doc. 20060113468
12	Landscape Rock	124
13	Stoop	14, 115, 125
14	Wooden steps	117, 20

Possible Encroachment Table

Number	Type of encroachment	Ownership information
20	Chainlink fence	85, 86, 87, 90, 91, 93, 94 HAROLD A. & R. ANGELA SOMMERS Doc. 20000071600 PATRICIA MONTGOMERY Doc. 20020102521
31	Wood Piles	111

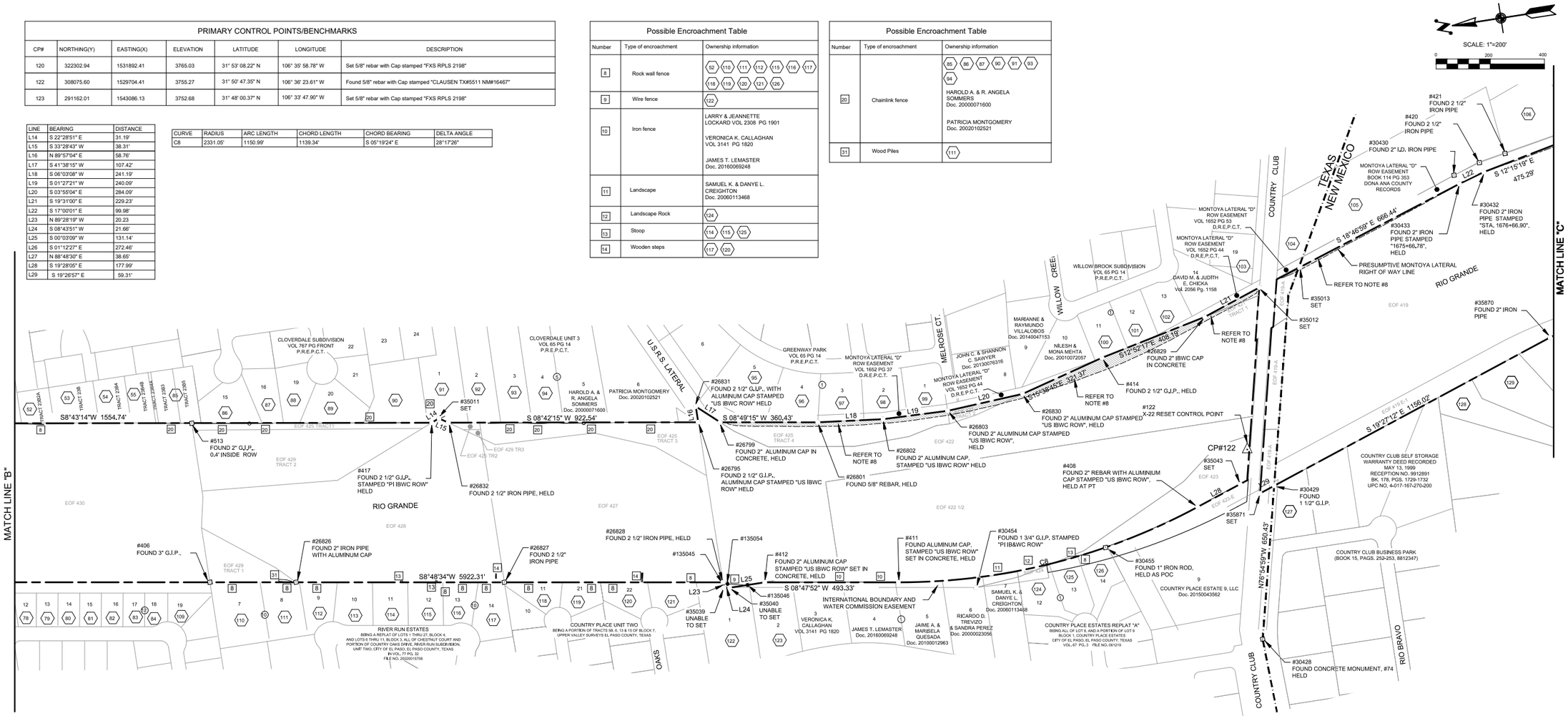

85 KAMAL KEN VASANDANI Doc. 20150076202	86 HERNANDEZ CARLOS JR. NO DEED	87 CONSTRUCTION CONTROL INC. Vol. 0316 Pg. 0784	88 DON W. LEDBETTER, LC Doc. 20020026678	89 MUTUAL FEDERAL SAVINGS & LOAN ASSOCIATION OF EL PASO Vol. 0914 Pg. 0251	90 RICHARD & DOROTHY BRAUN Vol. 1105 Pg. 1282	91 RICHARD & DOROTHY BRAUN Vol. 1105 Pg. 1282		
92 PETER M. & ANGELA C. KOPLOS Vol. 3437 Pg. 1219	93 HILEEN ELFREDA MALLORY Doc. 20140028002	94 FERNANDO ANAYA Doc. 20160043540	95 LEONARDO & SYLVIA C. SVARZBEIN Vol. 1876 Pg. 1205	96 JAMES P. & JENNIFER MCDONALD Doc. 20020091297	97 RON & REXANNE EVANS Doc. 20170041602	98 DAVID B. & PATRICIA E. BOONE Doc. 20160071334		
99 RICCI J CARSON & VIRGINIA BURKETT Doc. 20170062017	100 JAMES M. & JUANA JAMISON Vol. 2328 Pg. 0773	101 MARCELLO N. TRUJILLO Doc. 20000004679	102 TROY ALLAN MARKUSSON Doc. 20130055259	103 CARLOS ROCHA RAMIREZ & EDILIA NEVAREZ ROCHA Doc. 20150032062	104 MARGARET OSBORN DUPONT Vol. 2361 Pg. 0871	105 WELLS FARGO DELAWARE TRUST COMPANY RECEPTION NO. 1327554 UPC NO. 4-017-167-379-224		
106 BLOSS FARMS, LLC RECEPTION NO. 1721320 UPC NO. 4-017-167-392-264	107 LANNE VON MITTENWALD & TANYA VON MITTENWALD RECEPTION NO. 1022756 UPC NO. 4-017-167-411-304	108 ROBERT & TARA RIOJAS RECEPTION NO. 1214934 UPC NO. 4-017-167-412-329	109 ADAM & NINA WISENBAKER Doc. 20160027509	110 ALAN & BLANCA LONGE Doc. 20020071520	111 GORDON E. WELCH Vol. 4407 Pg. 0659	112 ROBERT & LINDA MARTINEZ Doc. 20050005034		
113 MARIO CASTANEDA Doc. 20050060806	114 NANCY & DONALD RUSSELL Doc. 20020098609	115 DEMETRIO & LETICIA JIMENEZ Doc. 20011006344	116 ARNALDO & MARIA CHAVARRIA Doc. 20060030458	117 MATTHEW & MARTHA MAIDL Doc. 20040060659	118 STEPHEN & MARIA RUHLE Doc. 20100036202	119 JESUS & CHRISTINE SEDANO Vol. 2110 Pg. 0732		
120 CHERYL HOPE & THOMAS HADERSBECK Doc. 20130085592	121 LEE C. & PRISCILLA RUTHERFORD Vol. 1971 Pg. 2003	122 MATTHEW & RACHEL WOOD Doc. 20150068920	123 LARRY & JEANNETTE LOCKARD Vol. 2308 Pg. 1901	124 ROBERT A. & DAWN P. MAIN Doc. 20130061694	125 ROBIN G. AND KAREN B. ARCHER Doc. 20130026183	126 MICHELLE M. MAUS Doc. 20160018750		
127 MARK & KATHRYN COX RECEPTION NO. 8822054 BK. 327, PG. 907 UPC NO. 4-017-167-261-162	128 EDWARD CORRAL RECEPTION NO. 9718305 BK. 99, PGS. 1198-1199 UPC NO. 4-017-167-285-270	129 LEO & IVONNE TAPI RECEPTION NO. 9524457 BK. 31, PGS. 802-803 UPC NO. 4-017-167-285-265	130 FERNANDO & AURORA SILVA RECEPTION NO. 772442 BK. 243, PGS. 1-5 UPC NO. 4-017-167-303-311	203 LARRY M. & JEANNETTE LOCKARD Vol. 2308 Pg. 1901				

NOTES:

1. Volume and Page (Vol. Pg.) and Book and Page (Bk. Pg.) refer to the original book or volume–based recording system in the El Paso County Clerk's Office, Official Public Records. Document numbers (DOC.) and Reception numbers (RECEPTION NO.) refer to the instrument number in the Official Public Records of El Paso County, Texas. The document number designations are equivalent to volume and page numbers previously used for filing documents. All adjoining ownership information shown hereon was gathered during the period of 2017 – 2021, and should be interpreted to be "now or formerly" owned by the stated parties in the adjoining deed references.
2. The UPC number, (UPC NO.) represents a geographic identification for the location of parcels on tax maps at the Tax Assessors offices in the State of New Mexico.
3. EOF–Engineering Office file as shown on drawings provided by the International Boundary Commission.
4. Survey completed on 07–28–21.
5. EL PASO COUNTY WATER IMPROVEMENT DISTRICT NO. 1 ("EPCWID#1") claims right–of–way to the portions of Montoya Lateral D lying within IBWC right–of–way based on that Deed Without Warranty made by THE UNITED STATES OF AMERICA as Grantor to EL PASO COUNTY WATER IMPROVEMENT DISTRICT NO. 1as Grantee, recorded on January 22, 1996 as Doc# 96004128 in Book 3002, Page 1025, Official Public Records of El Paso County, Texas. IBWC disputes this claim of right–of–way and maintains that only USBR lands were transferred by said deed.

SURVEYOR'S STATEMENT

I, Christian A. Clausen, Texas Registered Professional Land Surveyor #5511, do hereby certify that this plat of survey was prepared by me based on a field survey and research that I performed and/or supervised, and that the information presented hereon is true an correct to the best of my knowledge and belief; and that this survey meets the minimum standards for surveying in the State of Texas.

CHRISTIAN A. CLAUSEN, RPLS – TX 5511 — DATE: 03–03–2022

STATE OF TEXAS REGISTERED CHRISTIAN A. CLAUSEN 5511 PROFESSIONAL LAND SURVEYOR

SURVEYOR'S STATEMENT

I, Christian A. Clausen, New Mexico Professional Land Surveyor certify that I conducted and am responsible for this survey, that this survey is true and correct to the best of my knowledge and belief, and that this survey and plat meet minimum standards for surveying in the State of New Mexico. This represents a survey of an existing right–of–way, and is not a land subdivision as defined by the New Mexico Land Subdivision Act.

CHRISTIAN A. CLAUSEN, NMPLS – NM 16467 — DATE: 03–03–2022

CHRISTIAN A CLAUSEN NEW MEXICO 16467 LICENSED PROFESSIONAL SURVEYOR

LEGEND

CP#	Control point as noted
	Found monument, as noted
	Set 5/8"x18" rebar with aluminum cap STAMPED "C. A. CLAUSEN TX#5511 NM#16467 IBWC ROW 2018" unless otherwise noted
	Proposed Right-of-Way
G.I.P.	Galvanized Iron Pipe
●	Set 5/8" rebar for offset
P.R.E.P.C.T.	Plat Records, El Paso County, Texas
D.R.E.P.C.T.	Deed Records, El Paso County, Texas
O.R.E.P.C.T.	Official Records, El Paso County, Texas
P.C.	Point of Curvature
P.T.	Point of Tangency
ROW LINE	Refers to surveyed IBWC Right-of-Way line

DATUM

Horizontal: All bearings and coordinates are referenced to the New Mexico coordinate system of 1983, Central zone (3002), NAD 83 (2011). All distances and coordinates shown are grid values and may be converted to surface values by dividing by a the combined scale factor of 0.99973833. All measurements are in U. S. survey feet.

Vertical: All elevations are based on the North American vertical datum of 1988 (NAVD88)

International Boundary & Water Commission
United States Section

ARCADIS

FXBA

FRANK X. SPENCER & ASSOCIATES, INC.
Professional Engineers
TBPE-F-5384, TBPLS# 10064000
1133 MONTANA AVE
EL PASO, TX 79902
Phone:(915)533-4073
Fax:(915)533-4073
www.fxsa.com

INTERNATIONAL BOUNDARY AND WATER COMMISSION
UNITED STATES AND MEXICO
UNITED STATES SECTION

RIO GRANDE CANALIZATION PROJECT

SUNLAND PARK LEVEE REPAIR

EAST & WEST LEVEE

For Construction

REV NO	DEMOLITION OF DESIGNER AND DATE	DESCRIPTION OF REVISION

Arcadis U.S. Inc.
IBWC CONTRACTOR NAME

IBM15D001/IBM17T0010
IBWC CONTRACT/TASK ORDER

Frank X. Spencer & Associates, Inc.
DESIGNED BY

USIBWC HQ-ESD 03-03-2022

RIGHT OF WAY MAP

SOLICITATION/RFP NUMBER
191BWC22R0002

CONTRACT NUMBER
191BWC22C0011

C004

26911-000-01

CAD Filename: Sheet C002-C008 - ROW Sheets-Final.dwg
Sheet/Set Name: RIO GRANDE CANALIZATION PROJECT
Plot Style Table Name: IBWC_B&W.ctb
Plot Scale: 1:1
Paper Size: ANSI full bleed D (22.00 x 34.00 Inches)
Plot Device: DWG To PDF.pc3
Date and Time Plotted: 3/4/2022 1:59 PM
Date Last Saved: 3/4/2022 1:39 PM
AutoCAD Version: 22.0s (LMS Tech)
IBWC Border V20170817

PRIMARY CONTROL POINTS/BENCHMARKS

CP#	NORTHING(Y)	EASTING(X)	ELEVATION	LATITUDE	LONGITUDE	DESCRIPTION
120	322302.94	1531892.41	3765.03	31° 53' 08.22" N	106° 35' 58.78" W	Set 5/8" rebar with Cap stamped "FXS RPLS 2198"
122	308075.60	1529704.41	3755.27	31° 50' 47.35" N	106° 36' 23.61" W	Found 5/8" rebar with Cap stamped "CLAUSEN TX#5511 NM#16467"
123	291162.01	1543086.13	3752.68	31° 48' 00.37" N	106° 33' 47.90" W	Set 5/8" rebar with Cap stamped "FXS RPLS 2198"

IBWC ROW WEST-BOUNDARY POINTS

POINT#	NORTHING	EASTING	DESCRIPTION
201	322385.65	1531892.15	FOUND CHISELED "X" IN CONCRETE
202	322206.67	1531872.60	FOUND 3" GALVANIZED IRON PIPE
203	322028.80	1531840.32	FOUND 2" IRON PIPE WITH ALUMINUM CAP STAMPED "US IBWC ROW"
204	321170.22	1531659.75	FOUND 2" IRON PIPE WITH ALUMINUM CAP STAMPED "US IBWC ROW"
205	320776.05	1531431.67	FOUND 2" IRON PIPE WITH ALUMINUM CAP STAMPED "US IBWC ROW"
206	320669.30	1531414.95	FOUND 2" IRON PIPE WITH ALUMINUM CAP STAMPED "US IBWC ROW"
209	320085.44	1531038.07	FOUND #4 REBAR WITH CAP STAMPED "B&A INC"
211	318969.62	1530506.63	FOUND 2 1/2" IRON PIPE WITH ALUMINUM CAP STAMPED "US IBWC ROW"
401	315915.69	1530423.28	FOUND 1 3/4" GALVANIZED IRON PIPE STAMPED "PC IB&WC ROW"
402	316571.91	1530408.52	FOUND 2" GALVANIZED IRON PIPE, STAMPED "PC IB&WC ROW"
408	308288.94	1529522.90	FOUND 2" REBAR WITH ALUMINUM CAP STAMPED "US IBWC ROW"
411	309423.36	1529417.20	FOUND 2" ALUMINUM CAP STAMPED "US IBWC ROW"
412	309910.89	1529492.65	FOUND 2" ALUMINUM CAP STAMPED "US IBWC ROW"
514	318359.83	1530316.68	FOUND 2" ALUMINUM CAP STAMPED "US IBWC ROW"
26828	310063.25	1529516.29	FOUND 2 1\2" IRON PIPE
26839	306156.51	1530022.00	FOUND 3" ALUMINUM CAP ON CONCRETE STAMPED
30429	307997.51	1529556.95	FOUND 1 1/2" GALVANIZED IRON PIPE
30446	306722.23	1529994.97	FOUND 2" IRON PIPE STAMPED "US IBWC ROW"
35032	321171.58	1531433.43	POINT UNABLE TO SET (LANDS IN PRIVATE PROPERTY)
135061	321171.52	1531468.45	* 5/8" REBAR @ 35' \N 89°39'28" E) FROM POINT 35032 FOR OFFSET
135044	321095.58	1531433.09	* 5/8" REBAR @ 76' (S 00°15'17" W) FROM POINT 35032 FOR OFFSET
35033	320573.04	1531365.08	* 5/8" REBAR W/ALUM. CAP STAMPED "CA CLAUSEN TX5511 NM16467 IBWC ROW 2018 FXSA"
35034	320375.76	1531230.00	* 5/8" REBAR W/ALUM. CAP STAMPED "CA CLAUSEN TX5511 NM16467 IBWC ROW 2018 FXSA"
35035	320065.18	1531023.81	* 5/8" REBAR W/ALUM. CAP STAMPED "CA CLAUSEN TX5511 NM16467 IBWC ROW 2018 FXSA"
35036	320030.72	1531003.28	* 5/8" REBAR W/ALUM. CAP STAMPED "CA CLAUSEN TX5511 NM16467 IBWC ROW 2018 FXSA"
35037	318359.44	1530341.66	* 5/8" REBAR W/ALUM. CAP STAMPED "CA CLAUSEN TX5511 NM16467 IBWC ROW 2018 FXSA"
35038	316976.74	1530326.47	* 5/8" REBAR W/ALUM. CAP STAMPED "CA CLAUSEN TX5511 NM16467 IBWC ROW 2018 FXSA"
35039	310063.44	1529496.06	POINT UNABLE TO SET (LANDS IN PRIVATE PROPERTY)
135054	310047.27	1529507.91	* 5/8" REBAR @ 20' (N 36°13'41" E) FROM POINT 35039 FOR OFFSET
135045	310063.30	1529511.06	* 5/8" REBAR @ 15' (N 89°29'19" E) FROM POINT 35039 FOR OFFSET
35040	310042.68	1529498.25	POINT UNABLE TO SET (LANDS IN PRIVATE PROPERTY)
135054	310047.27	1529507.91	* 5/8" REBAR @ 16' (N 70°55'19" E) FROM POINT 35040 FOR OFFSET
135046	309975.03	1529492.71	* 5/8" REBAR @ 67' (S 00°03'99" W) FROM POINT 35040 FOR OFFSET
35043	308121.13	1529582.22	* 5/8" REBAR W/ALUM. CAP STAMPED "CA CLAUSEN TX5511 NM16467 IBWC ROW 2018 FXSA"
35047	306340.33	1530033.34	* 5/8" REBAR W/ALUM. CAP STAMPED "CA CLAUSEN TX5511 NM16467 IBWC ROW 2018 FXSA"
35048	305932.93	1529996.61	* 5/8" REBAR W/ALUM. CAP STAMPED "CA CLAUSEN TX5511 NM16467 IBWC ROW 2018 FXSA"
35049	305598.31	1529922.02	* 5/8" REBAR W/ALUM. CAP STAMPED "CA CLAUSEN TX5511 NM16467 IBWC ROW 2018 FXSA"
35050	304808.28	1529706.44	* 5/8" REBAR W/ALUM. CAP STAMPED "CA CLAUSEN TX5511 NM16467 IBWC ROW 2018 FXSA"
35051	304591.01	1529630.62	* 5/8" REBAR W/ALUM. CAP STAMPED "CA CLAUSEN TX5511 NM16467 IBWC ROW 2018 FXSA"
35865	306532.02	1530025.26	FOUND 5/8" REBAR
35870	306907.48	1529941.95	FOUND 2" IRON PIPE
35871	308053.44	1529537.20	SET CONCRETE NAIL

* SET MONUMENTS

IBWC ROW WEST-ADDITIONAL POINTS

POINT#	NORTHING	EASTING	DESCRIPTION
207	320572.18	1531366.61	FOUND REBAR WITH DAMAGED ALUMINUM CAP
208	320440.30	1531274.19	FOUND 3" G.I.P.
210	319069.95	1530543.01	FOUND PK NAIL STAMPED "WALL LN"
212	318737.82	1530425.13	FOUND 2 1/2" IRON PIPE WITH ALUMINUM CAP STAMPED "US IBWC ROW"
403	317907.99	1530272.93	FOUND 2 1/2" G.I.P., STAMPED "POC IB&WC ROW"
406	311934.95	1529806.76	FOUND 3" G.I.P.
11529	305013.94	1529758.94	FOUND 2 1/2" IRON PIPE, STAMPED "1698+06"
26825	316651.40	1530392.29	FOUND 2" ALUMINUM CAP STAMPED "US IBWC ROW"
26826	311620.85	1529758.12	FOUND 2" IRON PIPE WITH ALUMINUM CAP
26827	310860.92	1529640.26	FOUND 2 1\2" IRON PIPE
30428	308126.30	1529004.17	FOUND CONCRETE MONUMENT
30447	306534.14	1530039.73	FOUND 2 1/2" IRON PIPE STAMPED "1682+81"
30448	306338.27	1530035.29	FOUND 2 1/2" IRON PIPE
30449	305930.74	1529996.35	FOUND 2 1/2" IRON PIPE
30454	309142.89	1529353.37	FOUND 1 3/4" G.I.P. STAMPED "PI IB&WC ROW"
30455	308647.79	1529427.22	FOUND 1" IRON ROD
41047	308750.34	1528957.00	FOUND CITY MONUMENT
41048	309079.72	1529030.86	FOUND CITY MONUMENT
41049	309471.05	1529162.30	FOUND CITY MONUMENT
41050	309957.97	1529171.52	FOUND CITY MONUMENT

IBWC ROW EAST-BOUNDARY POINTS

POINT#	NORTHING	EASTING	DESCRIPTION
301	322385.02	1532279.01	FOUND PK NAIL IN CONCRETE
303	322425.94	1532294.83	FOUND 5/8" REBAR
304	321700.61	1532159.60	FOUND 3" G.I.P. STAMPED "POT IB&WC ROW"
414	308554.05	1530120.86	FOUND 2 1/2" G.I.P.
417	311035.89	1530263.01	FOUND 2 1/2" G.I.P., STAMPED "PI IBWC ROW"
420	307066.47	1530619.18	FOUND 2 1/2" IRON PIPE
421	306967.73	1530638.16	FOUND 2 1/2" IRON PIPE
424	305813.34	1530780.18	FOUND 3" G.I.P.
425	305523.25	1530725.08	FOUND 3" G.I.P., STAMPED "1692+03.08"
426	305176.02	1530609.39	FOUND 3" G.I.P. STAMPED "POT IB&WC ROW"
500	318351.89	1530971.13	FOUND 3" G.I.P. WITH CAP STAMPED "PI ROW"
501	317713.68	1530831.44	FOUND 3" G.I.P.STAMPED "PI TB&WC ROW"
502	317570.61	1530815.80	FOUND 3" G.I.P. WITH CAP
503	317368.60	1530841.14	FOUND 2" ALUMINUM CAP STAMPED "US IBWC ROW" IN CONCRETE
504	316859.30	1530938.77	FOUND 2 1/2" G.I.P. WITH CAP
505	316474.88	1531012.54	FOUND 2 1/2" G.I.P
506	316238.02	1531058.27	FOUND 3" ALUMINUM CAP STAMPED "US IBWC ROW" IN CONCRETE
507	316178.32	1531069.50	FOUND 3" ALUMINUM CAP STAMPED "US IBWC ROW" IN CONCRETE
508	315452.15	1530952.54	FOUND 2 1/2" G.I.P., STAMPED "POT IB&WC ROW"
509	314958.37	1530873.26	FOUND 2 1/2" G.I.P., STAMPED "POT IB&WC ROW"
510	314217.51	1530757.02	FOUND 2 1/2" G.I.P.
512	312966.41	1530560.53	FOUND 2" IRON PIPE, ON CONCRETE
513	311911.28	1530396.91	FOUND 2" G.I.P.
11545	298615.29	1533771.09	FOUND 2 1/2" G.I.P., STAMPED "IBWC ROW"
11546	296195.47	1536052.26	FOUND 2 1/2" IRON PIPE, STAMPED "1813+19.81"
11547	296033.13	1536192.39	FOUND 2 1/2" IRON PIPE, STAMPED "1815+32.27"
11548	295848.17	1536333.41	FOUND 2 1/2" IRON PIPE, STAMPED "1817+59.8"
11549	295483.64	1536536.86	FOUND 2 1/2" IRON PIPE, STAMPED "1821+72.84"
11550	294819.70	1536877.17	FOUND 2 1/2" IRON PIPE, STAMPED "1829+20.00"
11553	292591.96	1538363.53	FOUND 2 1/2" IRON PIPE, STAMPED "1876+53.65"
11554	292497.19	1538508.32	FOUND 2 1/2" IRON PIPE, STAMPED "1878+29.96"
11555	292277.82	1538946.94	FOUND 2 1/2" IRON PIPE, STAMPED "1863+71.89"
11556	291924.99	1539858.84	FOUND 2 1/2" IRON PIPE STAMPED "1873+47.2"
11557	291238.39	1543203.17	FOUND NMDOT BRASS CAP
14262	293822.29	1537370.20	FOUND 2 1/2" IRON PIPE, STAMPED "1840+28"
14271	293783.95	1537382.95	FOUND 2 1/2" IRON PIPE, STAMPED "1840+69"
14281	293664.59	1537441.54	FOUND 2 1/2" IRON PIPE
18396	303666.51	1529995.12	FOUND 3" G.I.P. STAMPED "POT IB&WC ROW"
21465	302236.36	1530046.41	FOUND 3" G.I.P., STAMPED "POC IB&WC ROW"
21602	300523.02	1531107.50	FOUND 2" G.I.P.
26761	303369.61	1529958.34	FOUND 3 1/2" G.I.P. STAMPED "POT IB&WC ROW"
26762	303213.80	1529943.19	FOUND 3 1/2" G.I.P.
26763	303016.43	1529936.38	FOUND 3 1/2" G.I.P. STAMPED "POC IB&WC ROW"
26765	302048.10	1530107.77	FOUND 2 1/2" G.I.P. STAMPED "POC IB&WC ROW"
26766	301865.96	1530181.67	FOUND 2 1/2" G.I.P., STAMPED "POC IB&WC ROW"
26767	301691.88	1530266.61	FOUND 5/8" REBAR WITH CAP, STAMPED "TX 4297 NM 10473"
26770	301317.57	1530509.66	FOUND 2 1/2" IRON PIPE STAMPED "1737+45.78"
26772	300085.41	1531516.18	FOUND 2 1/2" G.I.P.
26773	299902.83	1531752.47	FOUND 2 1/2" G.I.P., STAMPED "POC IB&WC ROW"
26774	299746.02	1532004.96	FOUND 2 1/2" IRON PIPE, STAMPED "PI IB&WC ROW"
26776	299334.83	1532778.30	FOUND 2 1/2" IRON PIPE, STAMPED "1768+29.07"
26777	300066.40	1531105.27	FOUND STATE LINE MONUMENT NO. 82
26779	301410.13	1530437.85	FOUND 3" IRON PIPE WITH ALUMINUM CAP STAMPED "DLS"
26787	291329.97	1546643.64	FOUND 2 1/2" PIPE STAMPED "1943+45"
26788	291231.21	1546371.06	FOUND 2 1/2" PIPE STAMPED "1940+40"
26789	291135.14	1545974.47	FOUND 2 1/2" PIPE STAMPED "1936+11.5"
26790	291131.75	1544872.58	FOUND 2 1/2" PIPE STAMPED "1924+87.54"
26793	291155.24	1544538.39	FOUND 2" PIPE STAMPED "POT IBWC ROW"
26795	310063.20	1530114.19	FOUND 2 1/2" G.I.P., WITH ALUMINUM CAP STAMPED "US IBWC ROW"
26799	309982.97	1530101.58	FOUND 2" ALUMINUM CAP IN CONCRETE
26801	309626.80	1530046.31	FOUND 5/8" REBAR
26802	309386.95	1530020.88	FOUND 2" ALUMINUM CAP, STAMPED "US IBWC ROW"
26803	309146.94	1530014.78	FOUND 2" ALUMINUM CAP STAMPED "US IBWC ROW"
26845	291810.83	1547398.52	FOUND 2" IRON PIPE

IBWC ROW EAST-BOUNDARY POINTS

POINT#	NORTHING	EASTING	DESCRIPTION
26829	308156.11	1530211.79	FOUND 2" IBWC CAP IN CONCRETE
26830	308863.51	1530034.19	FOUND 2" ALUMINUM CAP STAMPED "US IBWC ROW"
26831	310063.25	1530172.95	FOUND 2 1/2" G.I.P., WITH ALUMINUM CAP STAMPED "US IBWC ROW"
26832	310975.12	1530253.80	FOUND 2 1\2" IRON PIPE
26834	316020.03	1531043.80	FOUND 5/8" REBAR STAMPED "RPLS-4178"
26835	317130.92	1530886.67	FOUND 2 1/2" IRON PIPE
26836	321067.19	1532048.89	FOUND 5/8" REBAR
26837	299010.44	1533312.50	FOUND 2 1/2" IRON PIPE
26838	293482.76	1537533.96	FOUND 3" IRON PIPE WITH ALUMINUM CAP STAMPED "DMS 2010 PLS-11643"
29843	291141.81	1544703.38	FOUND 2 1/2" PIPE STAMPED "1923+16.87"
30430	307166.02	1530587.84	FOUND 2" IRON PIPE
30432	307055.46	1530582.62	FOUND 2" IRON PIPE STAMPED "STA-1676+66.90"
30433	307151.07	1530553.39	FOUND 2" IRON PIPE STAMPED "STA-1675+66.78"
30437	305903.96	1530772.89	FOUND 3" G.I.P.
30441	305033.96	1530561.20	FOUND 3" G.I.P. STAMPED "PI IB&WC ROW"
30443	304663.66	1530324.03	FOUND 3" G.I.P. STAMPED "IB&&WC ROW"
30444	304300.52	1530090.74	FOUND 1/2" REBAR
30445	304105.15	1530050.12	FOUND 3 1/2" G.I.P. STAMPED "POT IB&WC ROW"
30460	306591.00	1530683.51	FOUND 2" IRON PIPE WITH CAP STAMPED "IBWC ROW"
30461	306096.08	1530747.42	FOUND ALUMINUM CAP SET IN CONCRETE
30462	305779.31	1530773.76	FOUND 2" ALUMINUM CAP STAMPED "IBWC ROW"
30463	302818.56	1529943.36	FOUND 3" IRON PIPE STAMPED "POC ROW" WITH MAG NAIL ON TOP, NAIL DISTURBED
30464	301744.10	1530239.56	FOUND 3" ALUMINUM CAP ON REBAR, STAMPED "DLS EOF 417 EOF 418"
30465	293310.56	1537643.48	FOUND 1/2" REBAR WITH DAMAGED YELLOW CAP
30466	293145.96	1537765.34	FOUND 2" ALUMINUM CAP IN CONCRETE STAMPED "IBWC ROW"
30467	292991.14	1537898.32	FOUND 2" ALUMINUM CAP IN CONCRETE STAMPED "IBWC ROW"
30468	292846.55	1538042.13	FOUND 2" ALUMINUM CAP IN CONCRETE STAMPED "IBWC ROW"
30469	292712.82	1538196.08	FOUND 2" ALUMINUM CAP IN CONCRETE STAMPED "IBWC ROW"
30475	291659.02	1540738.76	FOUND 2" IRON PIPE WITH PK NAIL
30480	291409.61	1541552.15	FOUND 5/8" REBAR WITH ORANGE CAP STAMPED "NM 19971"
30482	291332.95	1541973.27	FOUND 2 1/2" IRON PIPE WITH PK NAIL STAMPED "PI IB&WC ROW"
30483	291250.60	1543008.85	FOUND CHISELED X ON CONCRETE ROCKWALL
35000	322975.38	1532365.30	* 5/8" REBAR W/ALUM. CAP STAMPED "CA CLAUSEN TX5511 NM16467 IBWC ROW 2018 FXSA"
35001	321068.14	1532044.73	* 5/8" REBAR W/ALUM. CAP STAMPED "CA CLAUSEN TX5511 NM16467 IBWC ROW 2018 FXSA"
35002	320674.77	1531956.08	* 5/8" REBAR W/ALUM. CAP STAMPED "CA CLAUSEN TX5511 NM16467 IBWC ROW 2018 FXSA"
35003	320126.00	1531647.46	* 5/8" REBAR W/ALUM. CAP STAMPED "CA CLAUSEN TX5511 NM16467 IBWC ROW 2018 FXSA"
35004	319993.19	1531515.82	* 5/8" REBAR W/ALUM. CAP STAMPED "CA CLAUSEN TX5511 NM16467 IBWC ROW 2018 FXSA"
35005	319458.45	1531198.48	* 5/8" REBAR W/ALUM. CAP STAMPED "CA CLAUSEN TX5511 NM16467 IBWC ROW 2018 FXSA"
35006	319371.23	1531163.03	* 5/8" REBAR W/ALUM. CAP STAMPED "CA CLAUSEN TX5511 NM16467 IBWC ROW 2018 FXSA"
35007	318626.44	1530999.76	* 5/8" REBAR W/ALUM. CAP STAMPED "CA CLAUSEN TX5511 NM16467 IBWC ROW 2018 FXSA"
35008	318475.44	1531045.50	* 5/8" REBAR W/ALUM. CAP STAMPED "CA CLAUSEN TX5511 NM16467 IBWC ROW 2018 FXSA"
35009	318349.34	1531176.62	* 5/8" REBAR W/ALUM. CAP STAMPED "CA CLAUSEN TX5511 NM16467 IBWC ROW 2018 FXSA"
35010	312572.66	1530498.73	* 5/8" REBAR W/ALUM. CAP STAMPED "CA CLAUSEN TX5511 NM16467 IBWC ROW 2018 FXSA"
35011	311007.07	1530274.93	* 5/8" REBAR W/ALUM. CAP STAMPED "CA CLAUSEN TX5511 NM16467 IBWC ROW 2018 FXSA"
35012	307940.05	1530288.37	* 5/8" REBAR W/ALUM. CAP STAMPED "CA CLAUSEN TX5511 NM16467 IBWC ROW 2018 FXSA"
35013	307782.02	1530338.80	* 5/8" REBAR W/ALUM. CAP STAMPED "CA CLAUSEN TX5511 NM16467 IBWC ROW 2018 FXSA"
35014	305890.63	1530773.97	* 5/8" REBAR W/ALUM. CAP STAMPED "CA CLAUSEN TX5511 NM16467 IBWC ROW 2018 FXSA"
35015	305867.03	1530773.92	* 5/8" REBAR W/ALUM. CAP STAMPED "CA CLAUSEN TX5511 NM16467 IBWC ROW 2018 FXSA"
35016	305812.53	1530781.12	* 5/8" REBAR W/ALUM. CAP STAMPED "CA CLAUSEN TX5511 NM16467 IBWC ROW 2018 FXSA"
35017	305766.52	1530773.73	* CHISELED "X" ON CONCRETE
35018	305524.83	1530726.87	* 5/8" REBAR W/ALUM. CAP STAMPED "CA CLAUSEN TX5511 NM16467 IBWC ROW 2018 FXSA"
35019	301314.46	1530507.35	* 5/8" REBAR W/ALUM. CAP STAMPED "CA CLAUSEN TX5511 NM16467 IBWC ROW 2018 FXSA"
35020	300520.37	1531109.34	* 5/8" REBAR W/ALUM. CAP STAMPED "CA CLAUSEN TX5511 NM16467 IBWC ROW 2018 FXSA"
35021	299170.41	1533053.47	* 5/8" REBAR W/ALUM. CAP STAMPED "CA CLAUSEN TX5511 NM16467 IBWC ROW 2018 FXSA"
35022	296196.78	1536047.38	* 5/8" REBAR W/ALUM. CAP STAMPED "CA CLAUSEN TX5511 NM16467 IBWC ROW 2018 FXSA"
35023	295488.73	1536538.34	* 5/8" REBAR W/ALUM. CAP STAMPED "CA CLAUSEN TX5511 NM16467 IBWC ROW 2018 FXSA"
35024	291980.99	1539901.94	* 5/8" REBAR W/ALUM. CAP STAMPED "CA CLAUSEN TX5511 NM16467 IBWC ROW 2018 FXSA"
35025	291518.15	1541137.96	* 5/8" REBAR W/ALUM. CAP STAMPED "CA CLAUSEN TX5511 NM16467 IBWC ROW 2018 FXSA"
35026	291288.16	1542399.20	* 5/8" REBAR W/ALUM. CAP STAMPED "CA CLAUSEN TX5511 NM16467 IBWC ROW 2018 FXSA"
35027	291103.35	1545368.98	* 5/8" REBAR W/ALUM. CAP STAMPED "CA CLAUSEN TX5511 NM16467 IBWC ROW 2018 FXSA"
35028	291610.46	1547140.31	* 5/8" REBAR W/ALUM. CAP STAMPED "CA CLAUSEN TX5511 NM16467 IBWC ROW 2018 FXSA"
35582	291610.46	1547140.31	FOUND CONC. MONUMENT WITH US IBWC ROW CAP

* SET MONUMENTS

DATUM

Horizontal: All bearings and coordinates are referenced to the New Mexico coordinate system of 1983, Central zone (3002), NAD 83 (2011). All distances and coordinates shown are grid values and may be converted to surface values by dividing by a the combined scale factor of 0.99973833. All measurements are in U. S. survey feet.

Vertical: All elevations are based on the North American vertical datum of 1988 (NAVD88)

International Boundary & Water Commission
United States Section

ARCADIS

FXSA
FRANK X. SPENCER & ASSOCIATES, INC.
Professional Surveyors & Mapping
(TBPLS Firm # 10064500)
1133 MONTANA AVE
EL PASO, TX 79902
Phone:915-533-4469
Fax:915533-4473
www.fxsa.com

INTERNATIONAL BOUNDARY AND WATER COMMISSION
UNITED STATES AND MEXICO
UNITED STATES SECTION

RIO GRANDE CANALIZATION PROJECT

SUNLAND PARK LEVEE REPAIR

EAST & WEST LEVEE

For Construction

REV NO	SIGNATURE OF IBWC SIGNER	DATE	DESCRIPTION OF REVISION

Arcadis U.S. Inc.
IBWC CONTRACTOR NAME

IBM15D001/IBM17T0010
IBWC CONTRACT/TASK ORDER

Frank X. Spencer & Associates, Inc.
DESIGNED BY

USIBWC HQ-ESD 03-03-2022

RIGHT OF WAY MAP

SOLICITATION/RFP NUMBER
191BWC22R0002

CONTRACT NUMBER
191BWC22C0011

C008

26915-000-01

CAD Filename
Sheet C002-C008 - ROW Sheets-Final.dwg

Sheet/Set Name
RIO GRANDE CANALIZATION PROJECT

Plot Style Table Name
IBWC_B&W.ctb

Plot Scale
1:1

Paper Size
ANSI full bleed D (22.00 x 34.00 inches)

Plot Device
DWG To PDF.pc3

Date and Time Plotted
3/4/2022 2:01 PM

Date Last Saved
3/4/2022 1:39 PM

AutoCAD Version
22.0s (LMS Tech)

IBWC Border V20170817

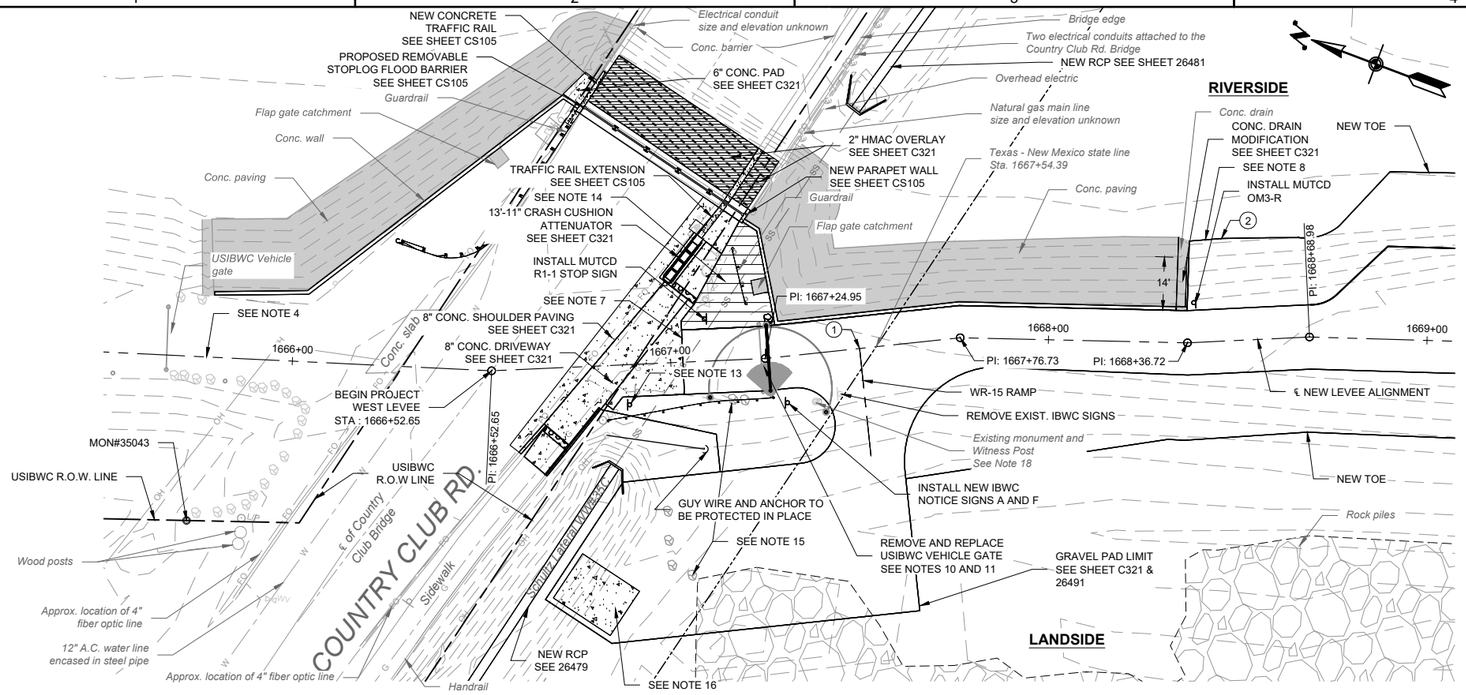

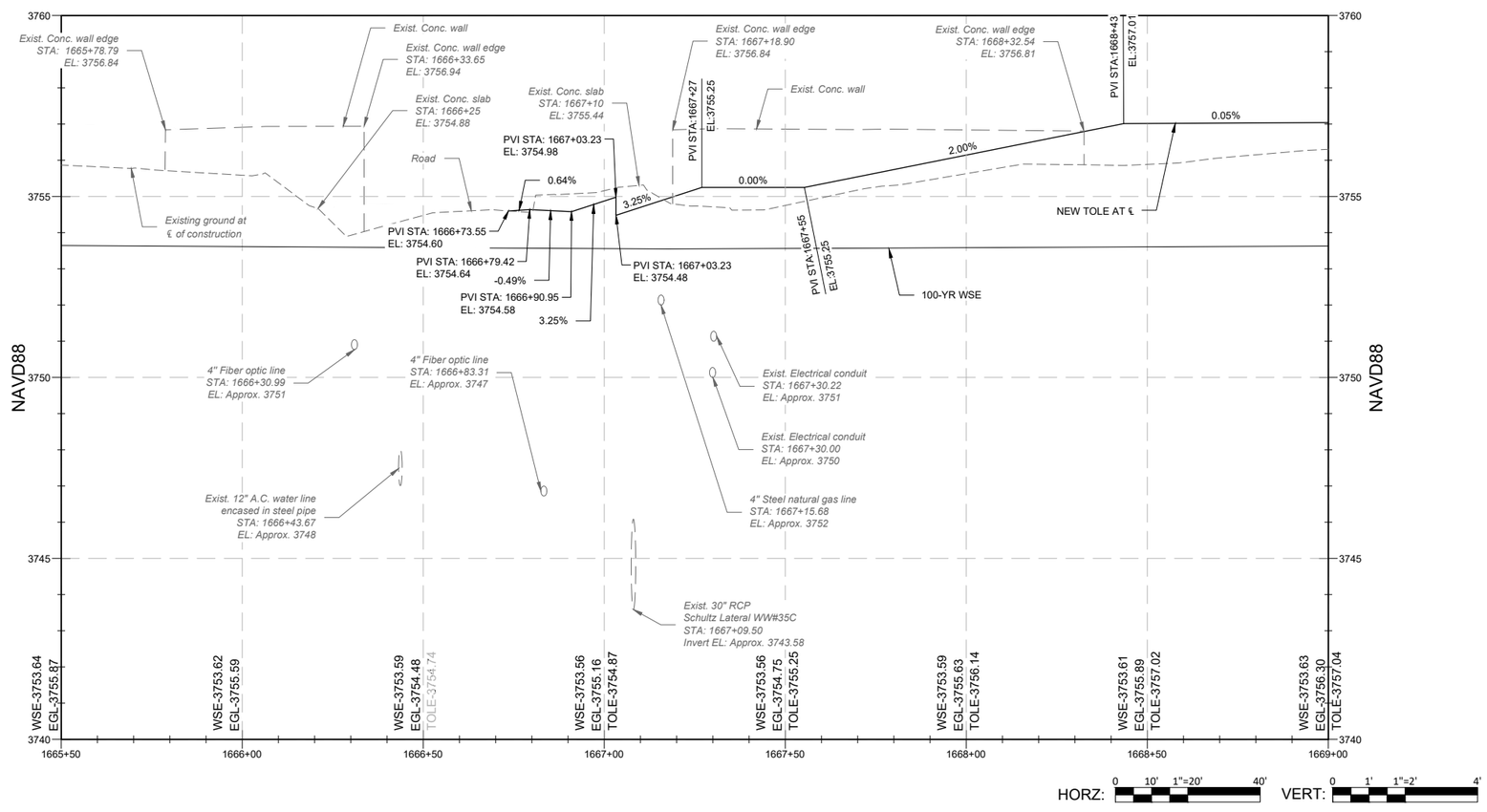

Notes:

1. Encroachments including landscaping, fences, rockwalls, and overgrown vegetation may not be identified on the drawings. Contractor shall remove all encroachments encountered inside the ROW during construction unless otherwise noted.
2. All proposed spot elevations indicate the top of the impervious fill material.
3. Concrete walls and slope paving on both sides of the bridge shall be protected in place. See IBM10C0018 drawings for existing floodwalls and concrete slope paving details.
4. Levee upstream of Country Club Road is currently under construction under USIBWC Contract 191BWC19C0010, record drawings are not available at this time.
5. For demolition work near Country Club Bridge intersection see sheet CS104.
6. Work from Sta. 1667+03.23 through 1668+36.72 shall follow general layout of Typical Section 3. Through this area the roadway width shall be as shown on this drawing and on C261 instead of that indicated in the typical sections. New impervious fill material along crest and slope shall be 12" minimum thickness. Landside levee slope in this area varies, see C321 for additional slope information.Levee upstream of Country Club Road is currently under construction under USIBWC Contract 191BWC19C0010, record drawings are not available at this time.
7. See C301, Detail 12, for aggregate roadway abutting the concrete driveway.
8. Levee slope transition from typical 3H:1V slope to slope tie-in at existing toe of concrete drain.
9. All signs shall be in accordance with USIBWC Standard Drawing 26424.
10. USIBWC Vehicle gates shall be in accordance with USIBWC Standard Drawing 26409. Gate hinge posts shall be on the riverside.
11. The exact location for this gate shall be carefully determined in the field to ensure that any impacts to floodwall, signs, and new ramp WR-15 are minimized. Do not install until COR has agreed to location of gate and stop posts.
12. The exact location of the signs will be determined in coordination with laying out the vehicle gate to ensure that these items do not impede each other.
13. Remove signs prior to construction if they are in the way or to protect them from damage. Reinstall removed signs after construction is complete.
14. Remove existing brush and aggregate material. Construct 6" minimum thickness of new aggregate roadway on existing subgrade. Compact top 12" of existing subgrade to 95% of the ASTM D698 maximum dry density. New aggregate roadway surface elevation shall match the elevations of the existing aggregate road surface. Area shall be graded to drain toward the flap gates.
15. Remove existing boulders.
16. Stoplog storage pad (18'x14') see sheet S102.
17. For West Levee Landside Ramp WR-15 information see sheet C321
18. If existing monument and witness post is disturbed, reset in accordance with Specification 02.21.000.

POINT TABLE

Point #	Station	Offset	Elevation	Description
1	1667+50.00	-	3755.25	WR-15 C/L
2	1668+47.02	27.08' Lt	3750.65	Toe of 3H:1V slope, end slope transition
Note: Point # is a circled note				

Revision 1

ARCADIS US., Inc.
Texas Registered
Engineering Firm F-533

1/28/2022 1/28/2022

International Boundary & Water Commission
United States Section

ARCADIS

Munoz & Dannenbaum JV
SBA Approved 8(a) Joint Venture
Mercedes | McAllen | Laredo | El Paso | Houston | Fort Worth | Dallas | Austin

INTERNATIONAL BOUNDARY AND WATER COMMISSION
UNITED STATES AND MEXICO
UNITED STATES SECTION

RIO GRANDE CANALIZATION PROJECT

SUNLAND PARK LEVEE REPAIR

WEST LEVEE

For Construction

REV NO.	DESCRIPTION OF REVISION	AND DATE
1	3/15/2022 Andrea Glover, PE	Replaced boulders with guardrail, added Schultz Lateral RCP & headwalls, revised landside pad/gravel area, and updated stockpile extents.

Arcadis U.S. Inc.
IBWC CONTRACTOR NAME

IBM15D0001/IBM17T0010
IBWC CONTRACT/TASK ORDER

Arcadis U.S. Inc.
DESIGNED BY

USIBWC HQ-CON 01-28-2022

WEST LEVEE
PLAN AND PROFILE
COUNTRY CLUB ROAD
BRIDGE

SOLICITATION/RFP NUMBER
191BWC22R0002

CONTRACT NUMBER
191BWC22C0011

C265

26975-000-01

CAD Filename C265-IBWC.dwg
SheetSet Name RIO GRANDE CANALIZATION PROJECT
Plot Style Table Name IBWC_B&W.ctb
Plot Scale 1:1
Paper Size ANSI full bleed D (22.00 x 34.00 Inches)
Plot Device DWG To PDF.pc3
Date and Time Plotted 3/24/2022 9:55 AM
Date Last Saved 3/24/2022 9:55 AM
AutoCAD Version 22.0s (LMS Tech)
IBWC Border V20170817

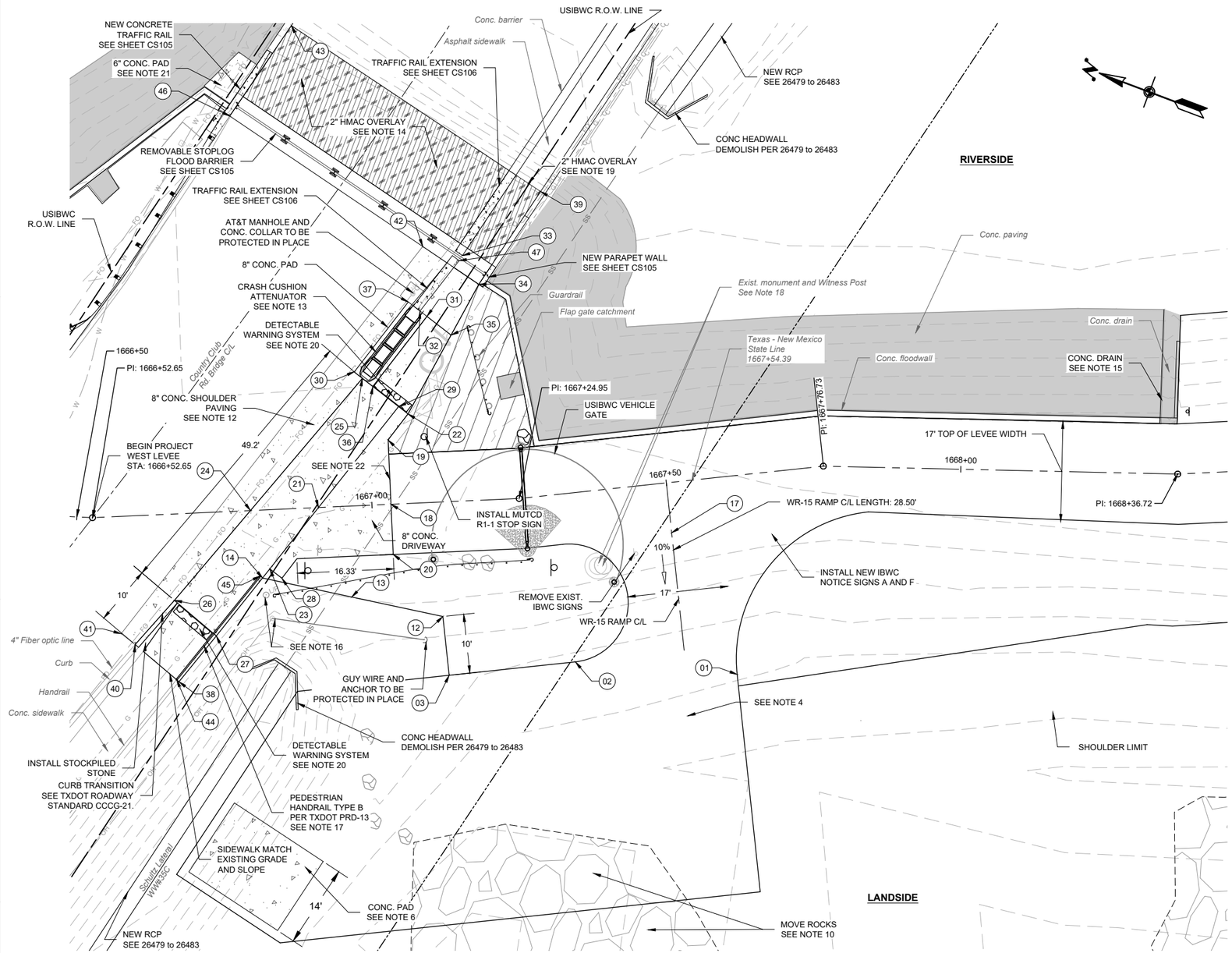

WEST LEVEE COUNTRY CLUB BRIDGE INTERSECTION AND LANDSIDE RAMP

0 5' 1"=10' 20'

POINT TABLE				
Point #	Station	Offset	Elevation	Description
1	1667+57.59	33.50 Rt	3753.42	Edge of pad
2	1667+31.50	28.50 Rt	3753.42	PT: R10'
3	1667+11.76	29.36 Rt	3753.42	Edge of pad
12	1667+11.15	19.38 Rt	3753.80	New toe
14	1666+80.95	11.49 Rt	3754.48	Edge of sidewalk
17	1667+50.00	8.50 Rt	3755.42	C/L Ramp beg.
18	1667+03.23	0	3754.98	Driveway C/L
19	1667+03.23	10.87 Lt	3754.76	Edge of driveway
20	1667+03.23	8.50 Rt	3755.15	Edge of driveway
21	1666+90.95	0	3754.58	Driveway C/L
22	1667+06.79	15.15 Lt	3754.76	Edge of driveway
23	1666+82.27	10.03 Rt	3754.46	Edge of driveway
24	1666+79.42	0	3754.64	Driveway C/L
25	1666+99.32	21.47 Lt	3755.07	Edge of driveway
26	1666+65.88	14.61 Rt	3754.35	Edge of driveway
27	1666+72.70	20.93 Rt	3754.32	Edge of driveway
28	1666+84.22	11.68 Rt	3754.53	Edge of driveway
29	1667+05.26	16.45 Lt	3754.80	Edge of Sidewalk
30	1666+98.06	22.70 Lt	3755.23	Edge of 8" conc. pad
31	1667+10.74	31.48 Lt	3755.17	Edge of 8" conc. pad
32	1667+09.61	32.44 Lt	3755.27	Sidewalk highpoint
33	1667+17.21	41.50 Lt	3755.20	Corner of Traffic Rail
34	1667+19.74	36.50 Lt	3755.20	Edge of sidewalk
35	1667+14.67	28.14 Lt	3755.06	Edge of sidewalk
36	1667+01.06	20.05 Lt	3754.91	Edge of 8" conc. pad
37	1667+07.69	34.07 Lt	3755.49	Edge of 8" conc. pad
38	1666+66.03	28.38 Rt	3754.72	End of sidewalk ramp
39	1667+34.03	51.28 Lt	3755.30	End of asphalt sidewalk
40	1666+58.90	21.77 Rt	3754.21	End of curb transition
41	1666+56.62	19.83 Rt	3754.22	End of conc. paving
42	1667+10.55	43.33 L	3755.64	End of conc. paving
43	1666+90.02	81.67 Lt	3753.14	End of asphalt overlay
44	1666+65.64	28.02 Rt	-	Handrail splice joint
45	1666+80.56	11.14 Rt	-	End of handrail
46	1666+78.91	66.85 Lt	3753.24	Corner of Traffic Rail
47	1667+16.59	40.66 Lt	3755.20	Corner of Traffic Rail

Note: Point # is a circled note

Notes:

1. Encroachments including landscaping, fences, rockwalls, and overgrown vegetation may not be identified on the drawings. Contractor shall remove all encroachments encountered inside the ROW during construction unless otherwise noted.
2. Proposed spot elevations #1 through #17 indicate the top of the impervious fill material. Proposed spot elevations #18 through #43 indicate the top of concrete or asphalt pavement.
3. Concrete walls and slope paving on both sides of the bridge shall be protected in place. See IBM10C0018 drawings for existing floodwalls and concrete slope paving details.
4. WR-15 Landside ramp and area around the stoplog storage pad shall be covered in 6" of aggregate roadway. See 26491 for additional details and dimensions of landside gravel pad at base of ramp WR-15.
5. All signs shall be in accordance with USIBWC Standard Drawing 26424.
6. Stoplog storage pad (18'x14') see sheet S112.
7. Contractor shall provide shed to store the stop logs and removable posts.
8. Stoplogs and removable posts shall be removed from shed without any special equipment.
9. Foundation or other connections between the storage container and the concrete slab shall be coordinated with the container manufacturer. See Specification 35.20.14.
10. Any stockpiled rocks within the gravel pad limit shall be removed and placed in other areas of the existing stockpile. Coordinate location with the COR.
11. See CS104 for items to be demolished near Country Club Rd. Intersection.
12. The new concrete roadway shoulder paving shall match the elevation of all adjacent pavements including the existing roadway pavement that is to remain, the new concrete driveway, the crash attenuator base slab, and the stoplog gate sill slab. New shoulder paving shall be finished to match existing roadway surface including grooving where applicable. See Detail 19 on Sheet C302.
13. Install TxDOT approved permanent, redirective, non-gating, MASH compliant, TL-2 rated crash cushion attenuator. Center crash cushion on top of traffic rail and provide 9" left offset transition section to safety shape traffic rail. System backup width shall be 24" and system length shall not exceed 14'-0".
14. Construct new 2" TxDOT Type D HMAC overlay from eastern edge of stoplog gate sill slab to edge of existing approach slab. Match existing grade and slope. See Specification 32.12.19
15. Modify existing concrete drain as shown on sheet C303.
16. Utility poles shall be protected in place.
17. Reinstall removed handrail (per CS104) if it still meets TxDOT PRD-13. Otherwise install new PRD-13 handrail through area indicated.
18. If existing monument and witness post is disturbed, reset in accordance with Specification 02.21.00.
19. 2" TxDOT Type D HMAC overlay shall match existing grade and slope of existing asphalt sidewalk. See Specification 32.12.19
20. Detectable Warning System shall be in accordance with TxDOT Standard PED-18. Sidewalks shall be constructed per these project drawings and not TxDOT PED-18.
21. Remove existing brush and aggregate material and construct new concrete paving. Compact 6" of existing subgrade to 95% of the ASTM D698 maximum dry density. See sheet C302, Detail 20, for reinforcement type and minimum cover. Concrete pad shall be sloped to drain away from concrete walls, match existing grade and elevation of adjacent concrete paving.
22. See sheet C301, Detail 12, for aggregate roadway abutting new concrete.
23. See Detail 20 on C302 for the new concrete sidewalk and driveway.
24. See Detail 21 on C302 for the new concrete crash attenuator base slab.

ANDREA GLOVER NEW MEXICO 16634 LICENSED PROFESSIONAL ENGINEER

STATE OF TEXAS ANDREA GLOVER 113650 LICENSED PROFESSIONAL ENGINEER

Revision 1

ARCADIS US., Inc.
Texas Registered
Engineering Firm F-533

STATE OF TEXAS KIRK LOWERY 119594 LICENSED PROFESSIONAL ENGINEER
1/28/2022

KIRK LOWERY NEW MEXICO 25162 PROFESSIONAL ENGINEER
1/28/2022

International Boundary & Water Commission
United States Section

ARCADIS

Munoz & Dannenbaum JV
SBA Approved 8(a) Joint Venture
Mercedes | McAllen | Laredo | El Paso | Houston | Fort Worth | Dallas | Austin

INTERNATIONAL BOUNDARY AND WATER COMMISSION
UNITED STATES AND MEXICO
UNITED STATES SECTION

RIO GRANDE CANALIZATION PROJECT

SUNLAND PARK LEVEE REPAIR

WEST LEVEE

For Construction

REV NO.	DATE	DESCRIPTION OF REVISION	BY	CHK	APP
1	3/18/2022	Revised Notes 4, 7, 8, & 10 and point 1. Deleted points 4-11, 13, 15, & 16. Moved the stoplog storage slab and revised the landside gravel pad.	Andrea Glover, PE		

Arcadis U.S. Inc.
IBWC CONTRACTOR NAME

IBM15D0001/IBM17T0010
IBWC CONTRACT/TASK ORDER

Arcadis U.S. Inc.
DESIGNED BY

USIBWC HQ-CON 01-28-2022

WEST LEVEE COUNTRY CLUB BRIDGE INTERSECTION AND LANDSIDE RAMP

SOLICITATION/RFP NUMBER
191BWC22R0002

CONTRACT NUMBER
191BWC22C0011

C321

26980-000-01

CAD Filename C321-IBWC.dwg

Sheet/Set Name RIO GRANDE CANALIZATION PROJECT

Plot Style Table Name IBWC_B&W.ctb

Plot Scale 1:1

Paper Size ANSI full bleed D (22.00 x 34.00 Inches)

Plot Device DWG To PDF.pc3

Date and Time Plotted 3/24/2022 10:04 AM

Date Last Saved 3/24/2022 9:41 AM

AutoCAD Version 22.0s (LMS Tech)

IBWC Border V20170817

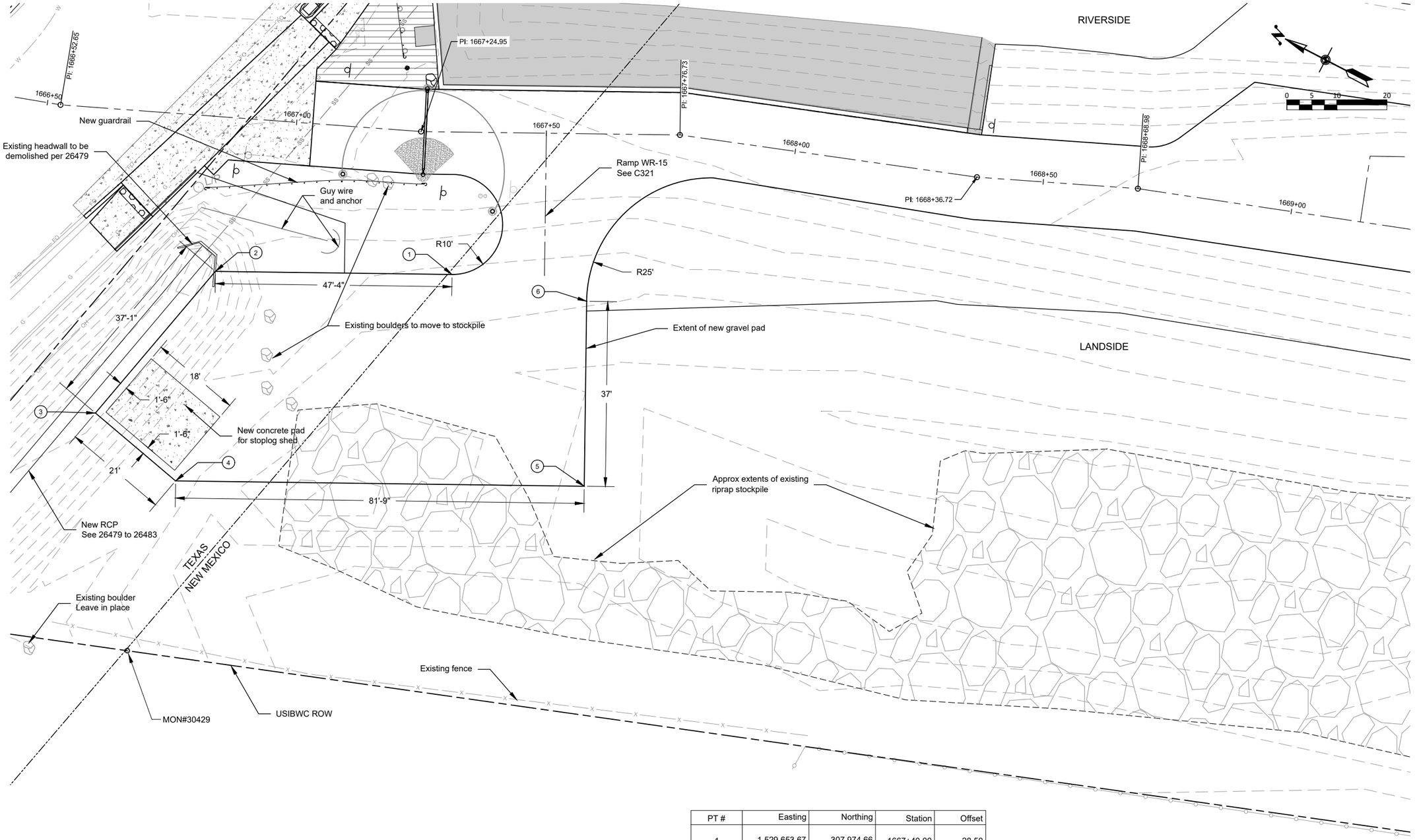

PT #	Easting	Northing	Station	Offset
1	1,529,653.67	307,974.66	1667+40.00	28.50
2	1,529,632.37	308,016.92	1666+85.98	30.93
3	1,529,596.17	308,025.11	1666+64.16	60.95
4	1,529,591.53	308,004.63	1666+80.77	73.30
5	1,529,628.32	307,931.64	1667+58.50	70.50
6	1,529,661.36	307,948.29	1667+58.50	33.50

NOTES:

1. See 26479 to 26483 for Schultz Lateral construction. New RCP shall be constructed and area backfilled prior to construction of new gravel pad and stoplog shed concrete slab.
2. New gravel pad shall be graded to within 1 foot except where ramp intersects. See 26479 for final grading of site.
3. Ensure gravel pad is graded to drain so that no puddling of water occurs. Entire extent of new gravel pad shall be covered with 6" of roadway aggregate surfacing.
4. See S102 for details on construction of stoplog storage pad (18'x14').
5. Orient shed on pad so that door is visible from Country Club Road.

ANDREA GLOVER NEW MEXICO 16634 LICENSED PROFESSIONAL ENGINEER

STATE OF TEXAS ANDREA GLOVER 113650 LICENSED PROFESSIONAL ENGINEER

International Boundary & Water Commission United States Section

INTERNATIONAL BOUNDARY AND WATER COMMISSION
UNITED STATES AND MEXICO
UNITED STATES SECTION

RIO GRANDE CANALIZATION PROJECT

SUNLAND PARK LEVEE REPAIR

WEST LEVEE

CONSTRUCTION DRAWING

REVISION	DESCRIPTION OF REVISION	DESIGNER INITIALS AND DATE

Andrea Glover, PE
DESIGNED

A. Glover
DRAWN

CHECKED

TECHNICAL APPROVAL

ADMIN APPROVAL

USIBWC HQ-CON 03-18-2022

WEST LEVEE COUNTRY CLUB BRIDGE LANDSIDE RAMP

IFB/RFP NUMBER	CONTRACT NUMBER
191BWC22R0002	191BWC22C0011

CONTRACTOR/DESIGNER DRAWING NUMBER

USIBWC DRAWING NUMBER

26491-000-00

CAD Filename 26491.dwg
SheetSet Name ####
Plot Style Table Name IBWC_B&W.ctb
Plot Scale 1:1
Paper Size ANSI Full Bleed D (22.00 X 34.00 Inches)
Plot Device DWG To PDF.pc3
Date and Time Plotted 3/24/2022 10:00 AM
Date Last Saved 3/24/2022 9:58 AM
AutoCAD Version 22.0s (LMS Tech)

IBWC Border V20210903

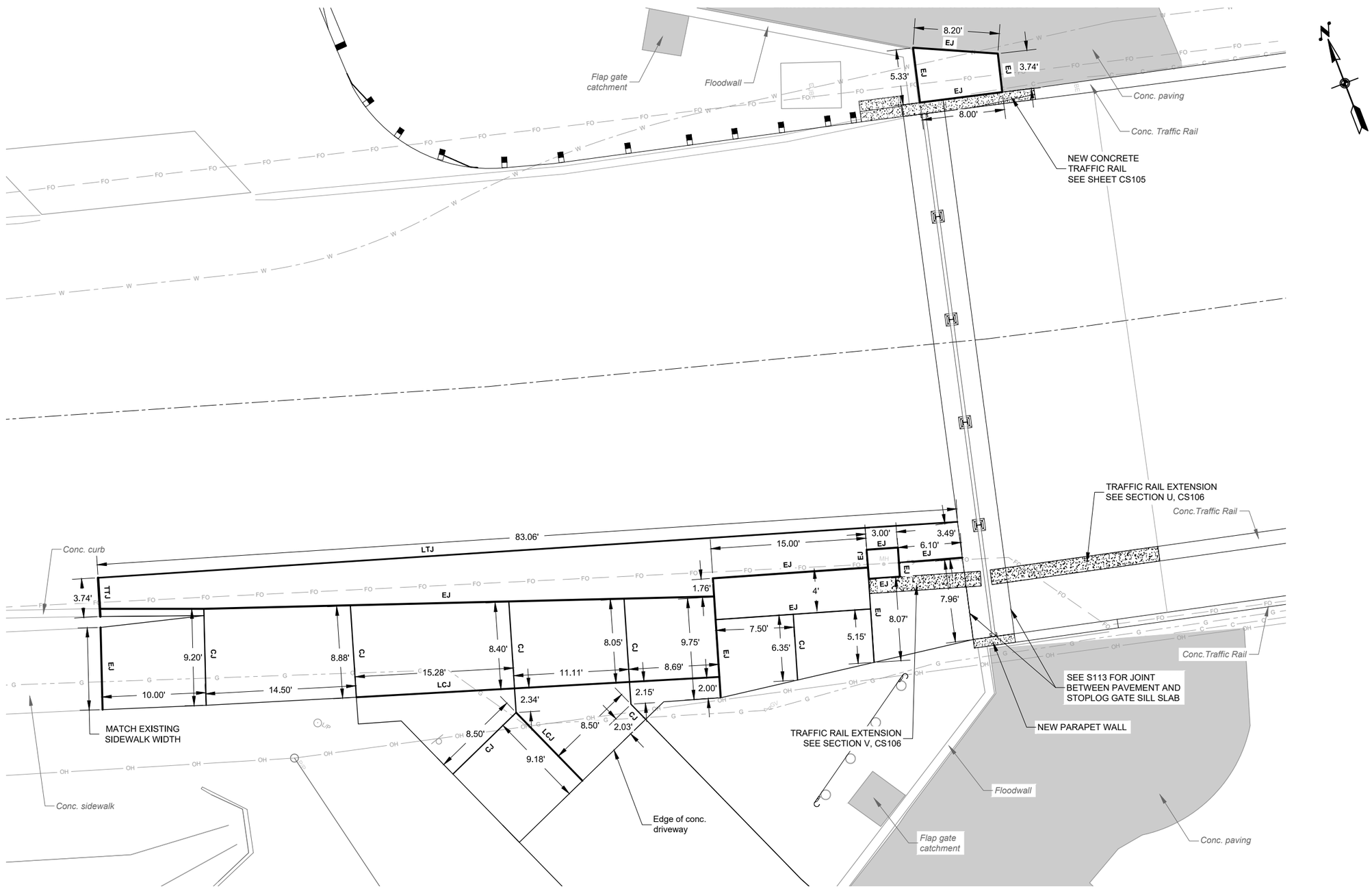

Notes:
1. See C302, Detail 13, for expansion joint (EJ) information.
2. See C302, Detail 15, for transverse tie joint (TTJ) information.
3. See C302, Detail 16, for longitudinal tie joint (LTJ) information.
4. See C302, Detail 17, for longitudinal construction joint (LCJ) information.
5. See C302, Detail 18, for contraction joint (CJ) information.

WEST LEVEE COUNTRY CLUB BRIDGE JOINT LAYOUT

0 5' 1"=5' 10'

ARCADIS US., Inc.
Texas Registered
Engineering Firm F-533

STATE OF TEXAS
KIRK LOWERY
119584
LICENSED
PROFESSIONAL ENGINEER
1/28/2022

International Boundary & Water Commission
United States Section

ARCADIS

Munoz & Dannenbaum JV
SBA Approved 8(a) Joint Venture
Marcedes | McAllen | Laredo | El Paso | Houston | Fort Worth | Dallas | Austin

INTERNATIONAL BOUNDARY AND WATER COMMISSION
UNITED STATES AND MEXICO
UNITED STATES SECTION

RIO GRANDE CANALIZATION PROJECT

SUNLAND PARK LEVEE REPAIR

For Construction

REV NO	SIGNATURE OF DESIGNER AND DATE	DESCRIPTION OF REVISION

Arcadis U.S. Inc.
IBWC CONTRACTOR NAME

IBM15D0001/IBM17T0010
IBWC CONTRACT/TASK ORDER

Arcadis U.S. Inc.
DESIGNED BY

USIBWC HQ-ESD 01-28-2022

WEST LEVEE COUNTRY CLUB BRIDGE JOINT LAYOUT

SOLICITATION/RFP NUMBER
191BWC22R0002

CONTRACT NUMBER
191BWC22C0011

C322

26981-000-00

CAD Filename
C322.dwg

SheetSet Name
RIO GRANDE CANALIZATION PROJECT

Plot Style Table Name
IBWC_B&W.ctb

Plot Scale
1:1

Paper Size
ANSI full bleed D (22.00 x 34.00 Inches)

Plot Device
DWG To PDF.pc3

Date and Time Plotted
1/27/2022 9:36 PM

Date Last Saved
1/26/2022 7:10 PM

AutoCAD Version
20.1s (LMS Tech)

IBWC Border V20170817

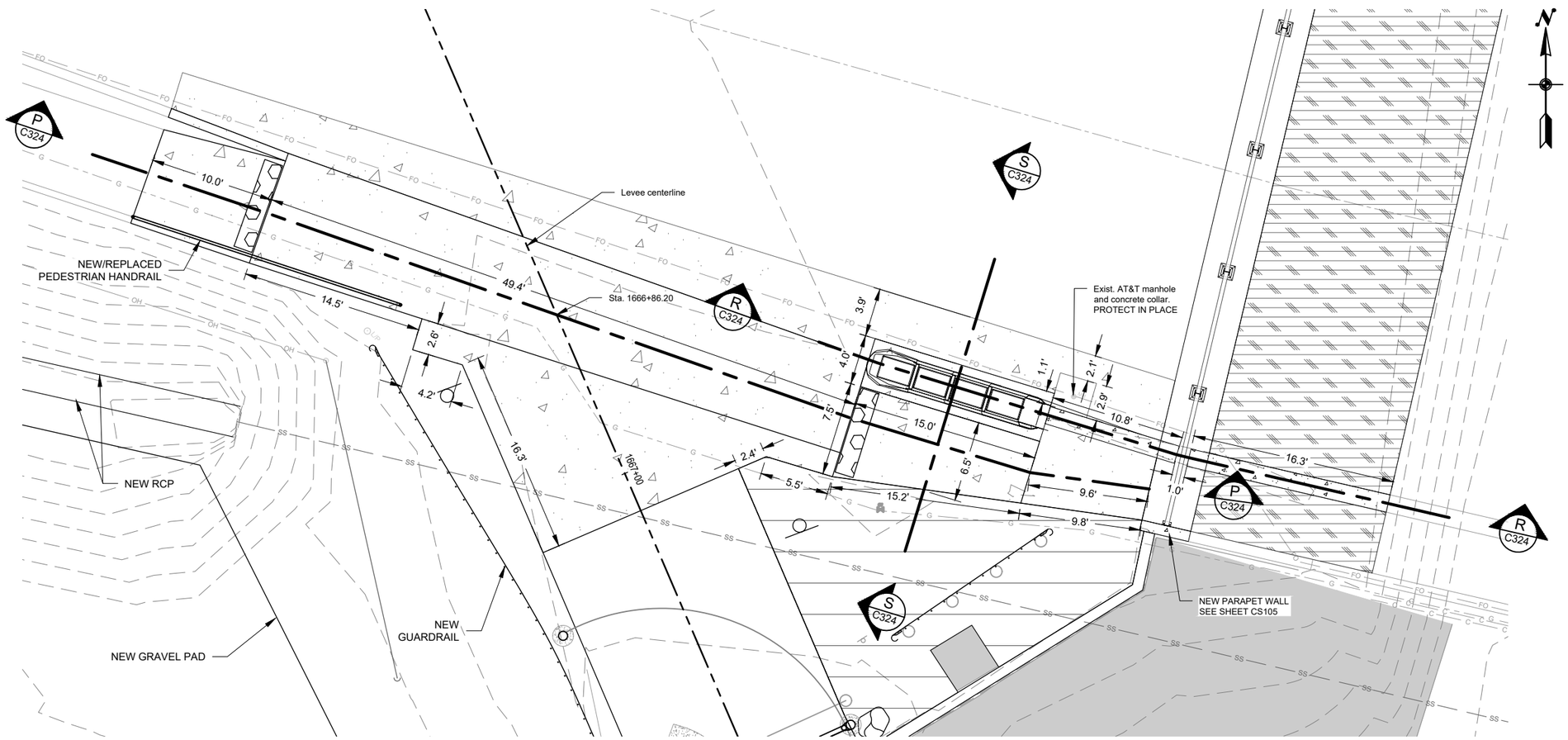

WEST LEVEE CONCRETE DRIVEWAY PLAN

SCALE:1"=5'-0"

0 2.5' 1"=5' 10'

ARCADIS US., Inc.
Texas Registered
Engineering Firm F-533

STATE OF TEXAS
ANDREA GLOVER
113650
LICENSED
PROFESSIONAL ENGINEER
Revision 1

STATE OF TEXAS
KIRK LOWERY
119584
LICENSED
PROFESSIONAL ENGINEER
1/28/2022

International Boundary & Water Commission
United States Section

ARCADIS

Munoz & Dannenbaum JV
SBA Approved 8(a) Joint Venture
Mercedes | McAllen | Laredo | El Paso | Houston | Fort Worth | Dallas | Austin

INTERNATIONAL BOUNDARY AND WATER COMMISSION
UNITED STATES AND MEXICO
UNITED STATES SECTION

RIO GRANDE CANALIZATION PROJECT

SUNLAND PARK LEVEE REPAIR

WEST LEVEE

For Construction

REV NO	DESCRIPTION OF REVISION	DESIGNER'S INITIALS AND DATE
1	Added new RCP and guardrail. Removed boulders.	Andrea Glover, PE 3/18/2022

Arcadis U.S. Inc.,
IBWC CONTRACTOR NAME

IBM15D0001/IBM17T0010
IBWC CONTRACT/TASK ORDER

Arcadis U.S. Inc.,
DESIGNED BY

USIBWC HQ-CON 01-28-2022

WEST LEVEE
CONCRETE DRIVEWAY
PLAN

SOLICITATION/RFP NUMBER
191BWC22R0002

CONTRACT NUMBER
191BWC22C0011

C323

26982-000-01

CAD Filename
C323-C324-IBWC.dwg

Sheetset Name
RIO GRANDE CANALIZATION PROJECT

Plot Style Table Name
IBWC_B&W.ctb

Plot Scale
1:1

Paper Size
ANSI full bleed D (22.00 x 34.00 Inches)

Plot Device
DWG To PDF.pc3

Date and Time Plotted
3/24/2022 10:38 AM

Date Last Saved
3/24/2022 10:37 AM

AutoCAD Version
22.0s (LMS Tech)

IBWC Border V20170817

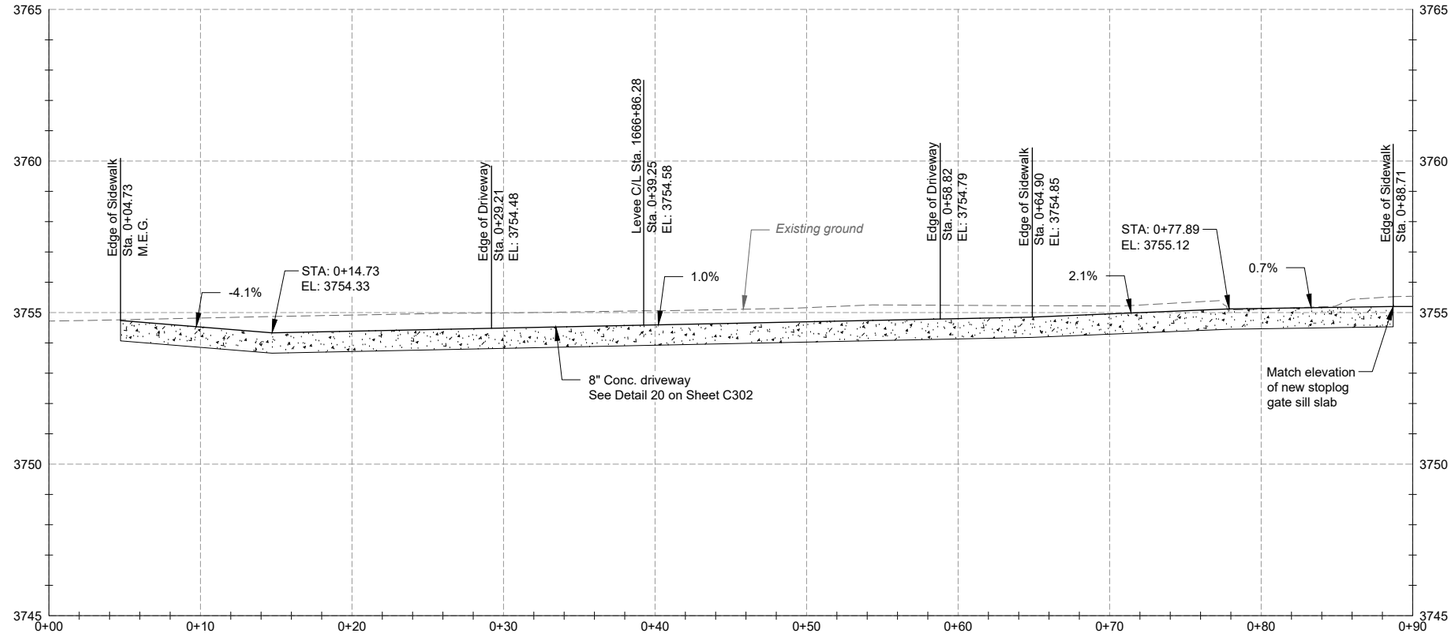

P C323 COUNTRY CLUB WEST SIDEWALK SECTION
SCALE:1"=5'-0"

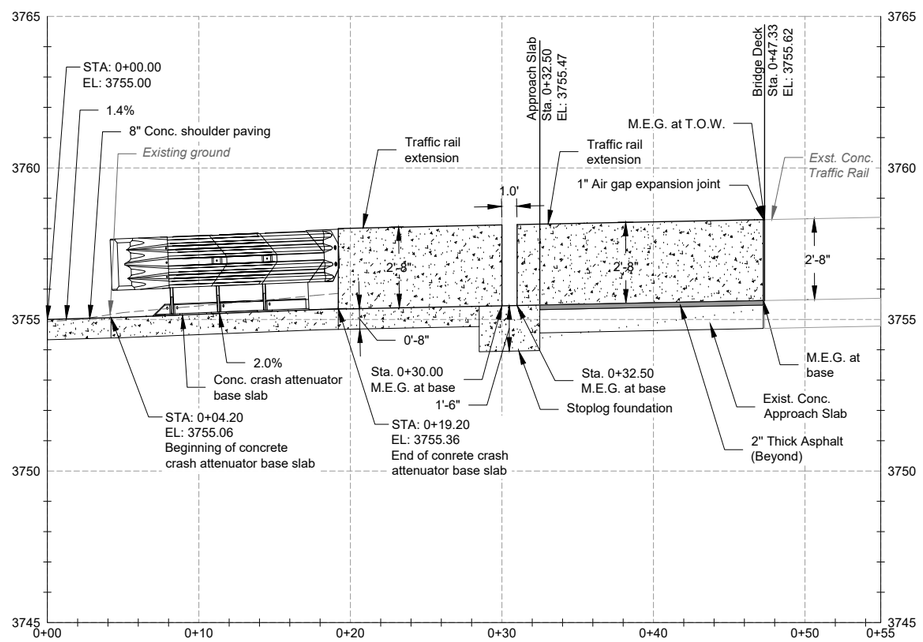

R C323 COUNTRY CLUB WEST VEHICLE BARRIER SECTION
SCALE:1"=5'-0"

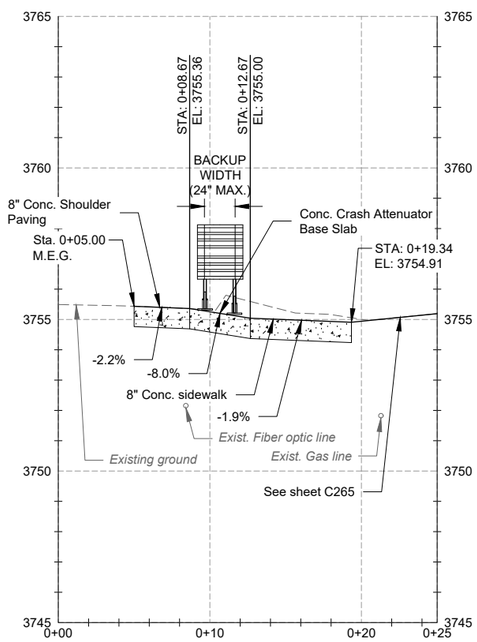

S C323 COUNTRY CLUB WEST CRASH CUSION ATTENUATOR SECTION
SCALE:1"=5'-0"

HORZ: 0 2.5' 1"=5' 10' VERT: 0 1"=2.5' 5'

ARCADIS US., Inc.
Texas Registered
Engineering Firm F-533

STATE OF TEXAS
KIRK LOWERY
119594
LICENSED
PROFESSIONAL ENGINEER
1/28/2022

International Boundary & Water Commission
United States Section

ARCADIS

Munoz & Dannenbaum JV
SBA Approved 8(a) Joint Venture
Mercedes | McAllen | Laredo | El Paso | Houston | Fort Worth | Dallas | Austin

INTERNATIONAL BOUNDARY AND WATER COMMISSION
UNITED STATES AND MEXICO
UNITED STATES SECTION

RIO GRANDE CANALIZATION PROJECT

SUNLAND PARK LEVEE REPAIR

WEST LEVEE

For Construction

REVISION	SIGNATURE OF RESPONSIBLE PERSON AND DATE	DESCRIPTION OF REVISION

Arcadis U.S. Inc.
IBWC CONTRACTOR NAME

IBM15D0001/IBM17T0010
IBWC CONTRACT/TASK ORDER

Arcadis U.S. Inc.
DESIGNED BY

USIBWC HQ-ESD 01-28-2022

WEST LEVEE
CONCRETE DRIVEWAY
CROSS SECTIONS

SOLICITATION/RFP NUMBER
191BWC22R0002

CONTRACT NUMBER
191BWC22C0011

C324

26983-000-00

CAD Filename
C324.dwg

SheetSet Name
RIO GRANDE CANALIZATION PROJECT

Plot Style Table Name
IBWC_BW.ctb

Plot Scale
1:1

Paper Size
ANSI full sheet D (22.00 x 34.00 Inches)

Plot Device
DWG To PDF.pc3

Date and Time Plotted
1/27/2022 9:40 PM

Date Last Saved
1/20/2022 7:12 PM

AutoCAD Version
20.1s (LMS Tech)

IBWC Border V20170817

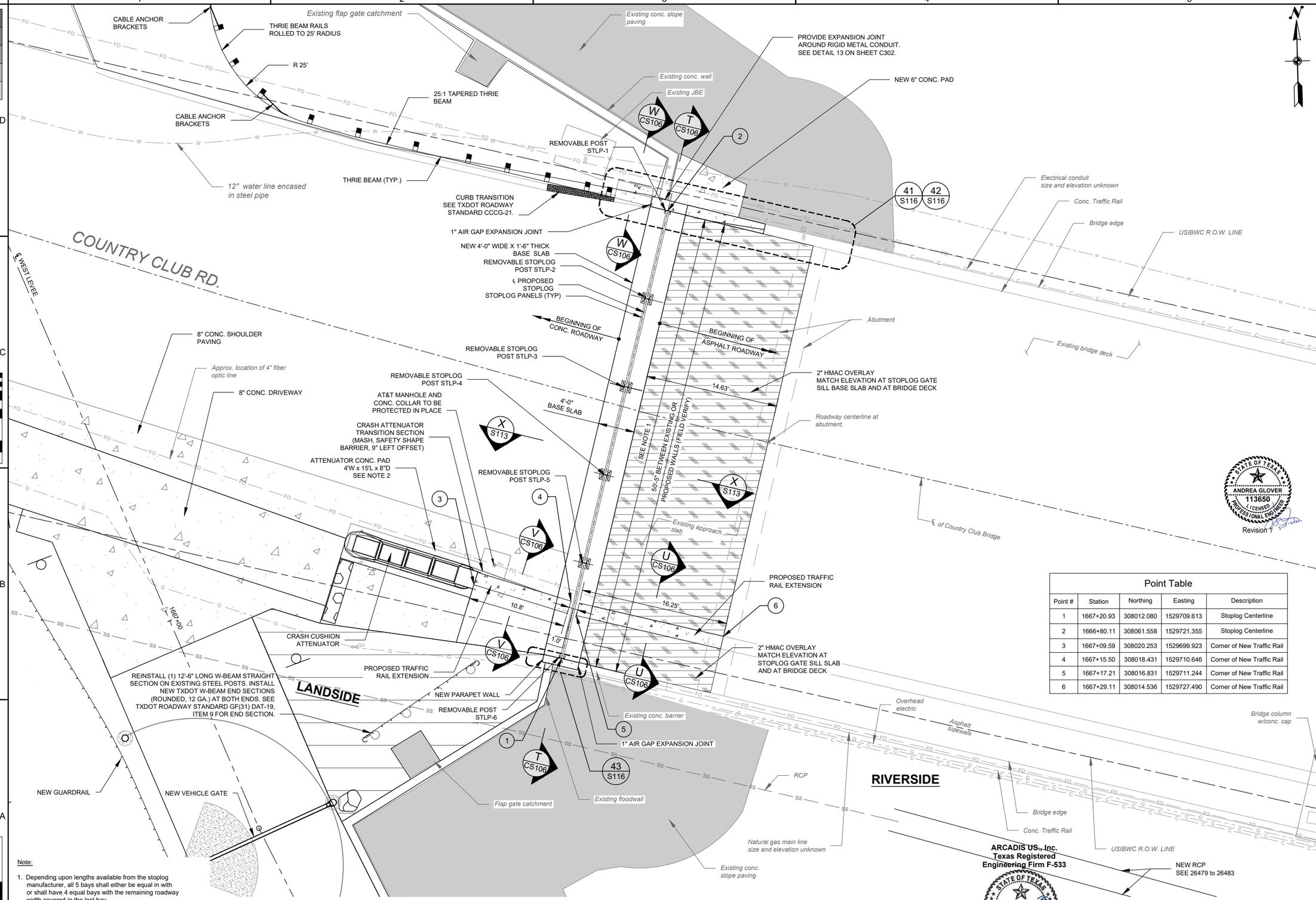

Note:

1. Depending upon lengths available from the stoplog manufacturer, all 5 bays shall either be equal in with or shall have 4 equal bays with the remaining roadway width covered in the last bay.
2. The concrete pad under the crash attenuator shall meet manufacturer's requirements for the crash attenuator foundation.

Point Table

Point #	Station	Northing	Easting	Description
1	1667+20.93	308012.080	1529709.613	Stoplog Centerline
2	1666+80.11	308061.558	1529721.355	Stoplog Centerline
3	1667+09.59	308020.253	1529699.923	Corner of New Traffic Rail
4	1667+15.50	308018.431	1529710.646	Corner of New Traffic Rail
5	1667+17.21	308016.831	1529711.244	Corner of New Traffic Rail
6	1667+29.11	308014.536	1529727.490	Corner of New Traffic Rail

OVERALL PLAN WITH STOPLOG LAYOUT

SCALE: 1" = 5'-0"

ARCADIS U.S., Inc.
Texas Registered
Engineering Firm F-533

STATE OF TEXAS
KIRK LOWERY
119594
LICENSED PROFESSIONAL ENGINEER
1/28/2022

STATE OF TEXAS
ANDREA GLOVER
113650
LICENSED PROFESSIONAL ENGINEER
Revision 1

International Boundary & Water Commission
United States Section

ARCADIS

Munoz & Dannenbaum JV
SBA Approved 8(a) Joint Venture
Mercedes | McAllen | Laredo | El Paso | Houston | Fort Worth | Dallas | Austin

INTERNATIONAL BOUNDARY AND WATER COMMISSION
UNITED STATES AND MEXICO
UNITED STATES SECTION

RIO GRANDE CANALIZATION PROJECT

SUNLAND PARK LEVEE REPAIR

WEST LEVEE

For Construction

REV NO.	DATE	DESCRIPTION OF REVISION
1	3/18/2022	Added Schultz Lateral RCP, guardrail, and vehicle gate

Arcadis U.S. Inc.
IBWC CONTRACTOR NAME

IBM15D0001/IBM17T0010
IBWC CONTRACT/TASK ORDER

Arcadis U.S. Inc.
DESIGNED BY

USIBWC HQ-CON 01-28-2022

COUNTRY CLUB BRIDGE WEST - STOPLOG ARRANGEMENT LAYOUT

SOLICITATION/RFP NUMBER
191BWC22R0002

CONTRACT NUMBER
191BWC22C0011

CS105

27250-000-01

CAD Filename CS105-IBWC.dwg
Sheet/Set Name RIO GRANDE CANALIZATION PROJECT
Plot Style Table Name IBWC_B&W.ctb
Plot Scale 1:1
Paper Size ANSI full bleed D (22.00 x 34.00 Inches)
Plot Driver DWG To PDF.pc3
Date and Time Plotted 3/24/2022 12:26 PM
Date Last Saved 3/24/2022 12:26 PM
AutoCAD Version 22.0s (LMS Tech)
IBWC Border V20170817

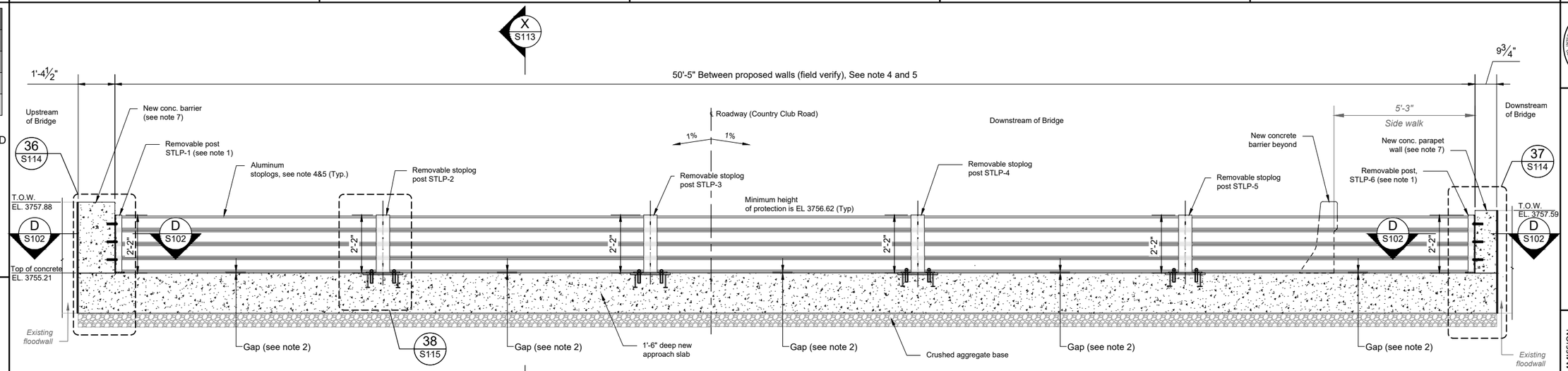

T CS105 COUNTRY CLUB BRIDGE STOPLOG CROSS SECTION
SCALE:1/2"=1'-0"

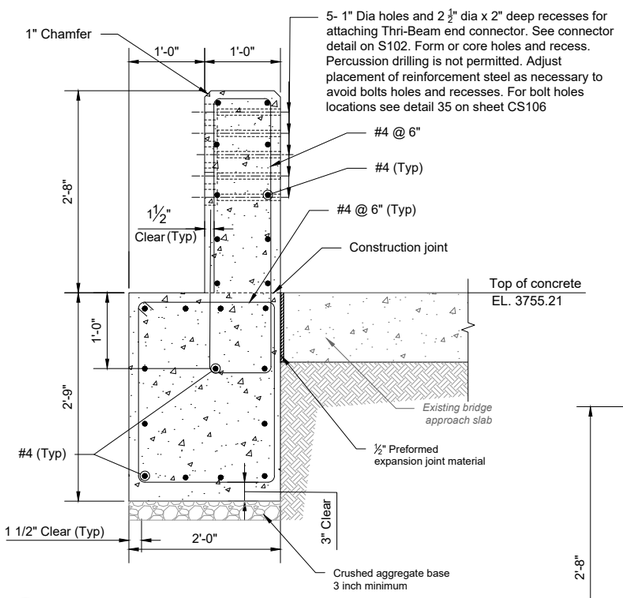

W CS105 S116 GROUND MOUNTED BARRIER CROSS SECTION
SCALE:1"=1'-0"

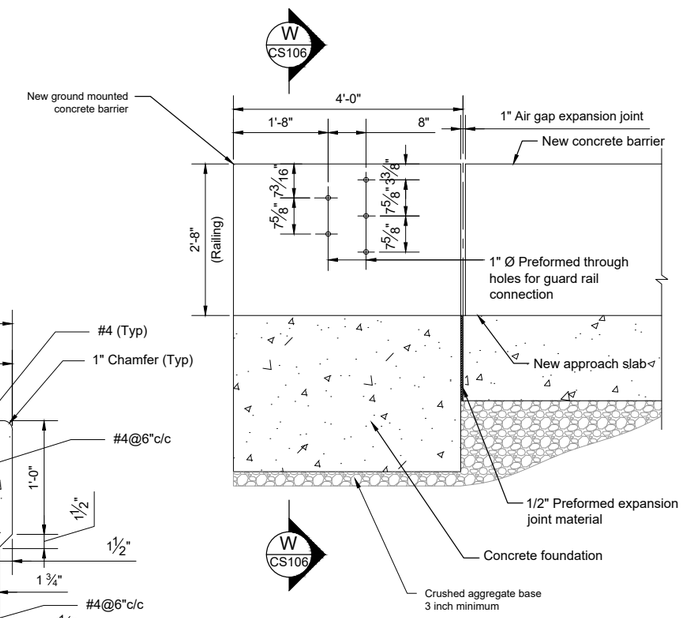

35 S116 WEST LEVEE UPSTREAM METAL GUARD RAIL CONNECTION DETAIL

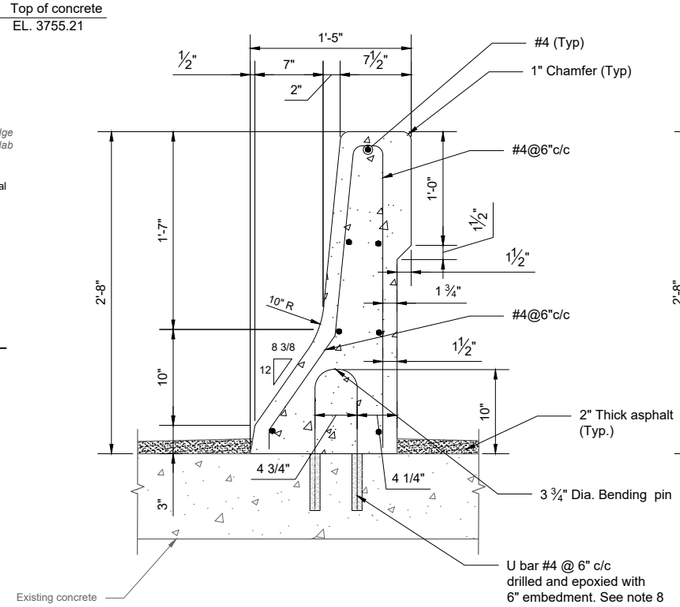

U CS105 CONCRETE BARRIER IN EXISTING BRIDGE APPROACH SLAB
SCALE:3"=1'-0"

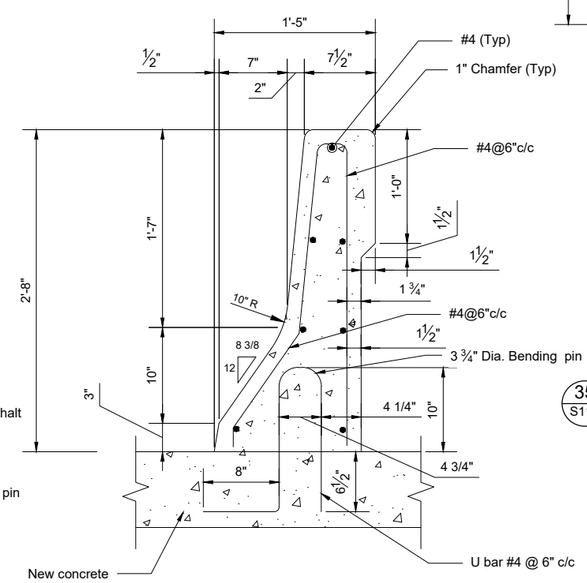

V CS105 CONCRETE BARRIER IN NEW CONCRETE SLAB
SCALE:3"=1'-0"

Notes:

1. For vertical post member size see dwg. no. S114.
2. Maximum 1.75" gap between bottom of bottom most plank and the roadway surface.
3. Storage facilities must be provided by the Contractor for storage of stoplogs, removable posts and accessories. See sheet C321 for the orientation of the stoplog storage pad. See sheet S102 for storage pad reinforcement details.
4. Stoplog lengths shall be smaller than the post center to center distance shown. Contractor must field verify actual distance prior to ordering stoplogs.
5. Depending upon lengths available from the stoplog manufacturer, all 5 bays shall either be equal in width or shall have 4 equal bays with the remaining roadway width covered in the last bay.
6. Contractor shall provide 1 inch chamfer using chamfer strips on all exposed corners of columns, beams and walls, or as required to match existing.
7. Match inside face of the new concrete barrier and parapet wall with bottom most inside face of the adjacent existing barrier.
8. While demolishing existing concrete barrier on upstream end in places where the existing slab is to remain, keep existing dowels if they are at least 2 inches away from barrier face rebars. Otherwise, cut existing dowels flush with top of slab and drill and epoxy new U-bar dowels by placing them in between existing dowel locations.

ARCADIS US., Inc.
Texas Registered
Engineering Firm F-533

STATE OF TEXAS
KIRK LOWERY
119584
LICENSED
PROFESSIONAL ENGINEER
1/28/2022

International Boundary & Water Commission
United States Section

ARCADIS

Munoz & Dannenbaum JV
SBA Approved 8(a) Joint Venture
Mercedes | McAllen | Laredo | El Paso | Houston | Fort Worth | Dallas | Austin

INTERNATIONAL BOUNDARY AND WATER COMMISSION
UNITED STATES AND MEXICO
UNITED STATES SECTION

RIO GRANDE CANALIZATION PROJECT

SUNLAND PARK LEVEE REPAIR

WEST LEVEE

For Construction

REV. NO.	SIGNATURE OF DESIGNER AND DATE	DESCRIPTION OF REVISION

Arcadis U.S. Inc.
IBWC CONTRACTOR NAME

IBM15D0001/IBM17T0010
IBWC CONTRACT/TASK ORDER

Arcadis U.S. Inc.
DESIGNED BY

USIBWC HQ-ESD 01-28-2022

COUNTRY CLUB BRIDGE WEST - CROSS SECTIONAL ELEVATION VIEW

SOLICITATION/RFP NUMBER
191BWC22R0002

CONTRACT NUMBER
191BWC22C0011

CS106

27251-000-00

CAD Filename CS106.dwg
SheetSet Name RIO GRANDE CANALIZATION PROJECT
Plot Style Table Name IBWC_B&W.ctb
Plot Scale 1:1
Paper Size ANSI full bleed D (22.00 x 34.00 Inches)
Plot Device DWG To PDF.pc3
Date and Time Plotted 1/28/2022 12:58 PM
Date Last Saved 1/21/2022 10:14 PM
AutoCAD Version 20.1s (LMS Tech)
IBWC Border V20170817

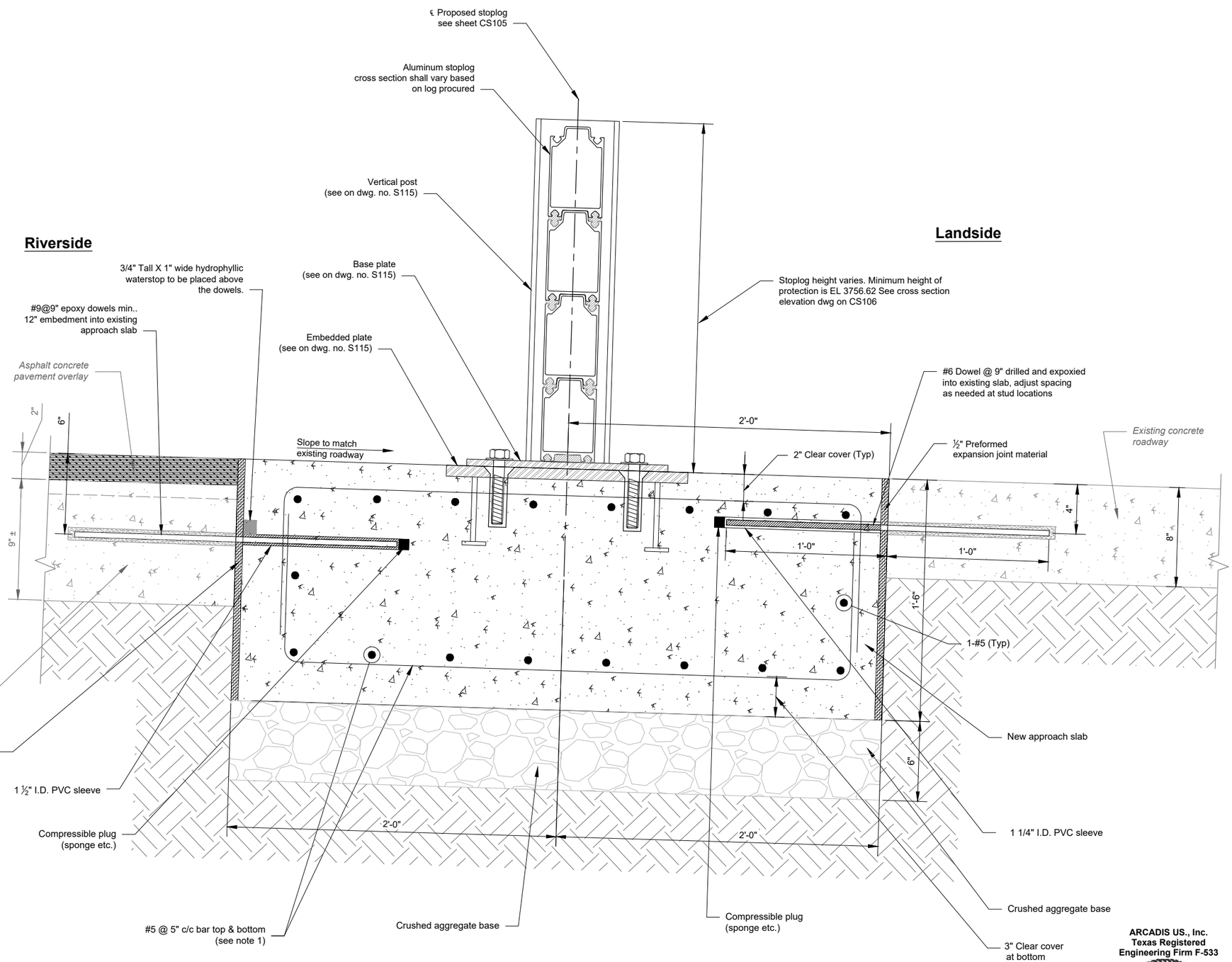

X
CS105/
CS106

TYPICAL SECTION THROUGH STOPLOG

SCALE:3"=1'-0"

0 3" 6" 9"

Notes:

1. Contractor can substitute #8 bars @ 12" for the #5 bars.
2. Subgrade shall be free of voids/pockets or any uncompacted fill.
3. Subgrade under the structure shall be compacted per specifications prior to laying down the crushed aggregate base.

ARCADIS US., Inc.
Texas Registered
Engineering Firm F-533

STATE OF TEXAS
KIRK LOWERY
119594
LICENSED
PROFESSIONAL ENGINEER

1/28/2022

International Boundary & Water Commission
United States Section

ARCADIS

Munoz & Dannenbaum JV
SBA Approved 8(a) Joint Venture
Mercedes | McAllen | Laredo | El Paso | Houston | Fort Worth | Dallas | Austin

INTERNATIONAL BOUNDARY AND WATER COMMISSION
UNITED STATES AND MEXICO
UNITED STATES SECTION

RIO GRANDE CANALIZATION PROJECT

SUNLAND PARK LEVEE REPAIR

WEST LEVEE

For Construction

REV. NO. | SIGNATURE OF DESIGNER AND DATE | DESCRIPTION OF REVISION

Arcadis U.S. Inc.
IBWC CONTRACTOR NAME

IBM15D0001/IBM17T0010
IBWC CONTRACT/TASK ORDER

Arcadis U.S. Inc.
DESIGNED BY

USIBWC HQ-ESD 01-28-2022

COUNTRY CLUB
BRIDGE WEST -
SECTIONS & DETAILS-I

SOLICITATION/RFP NUMBER
191BWC22R0002

CONTRACT NUMBER
191BWC22C0011

S113

27257-000-00

CAD Filename
S113.dwg

SheetSet Name
RIO GRANDE CANALIZATION PROJECT

Plot Style Table Name
IBWC_B&W.ctb

Plot Scale
1:1

Paper Size
ANSI full bleed D (22.00 x 34.00 Inches)

Plot Device
DWG To PDF.pc3

Date and Time Plotted
1/28/2022 1:24 PM

Date Last Saved
1/21/2022 10:17 PM

AutoCAD Version
20.1s (LMS Tech)

IBWC Border V20170817

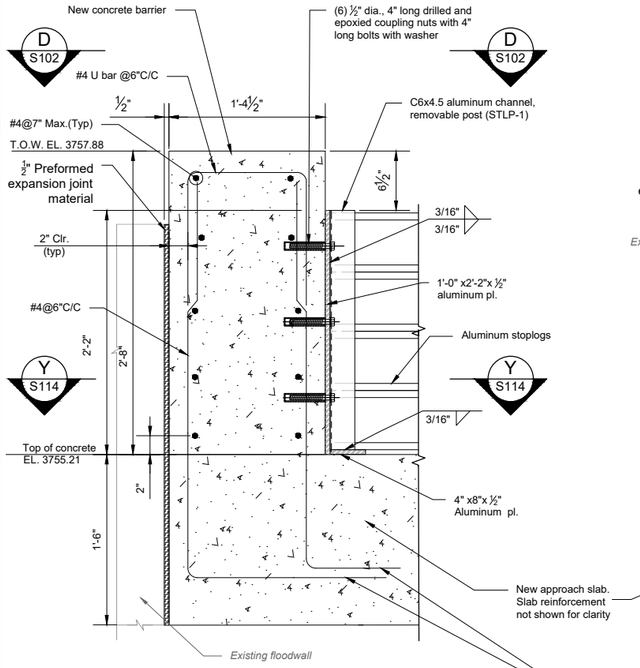

(FLOOD CONDITION)

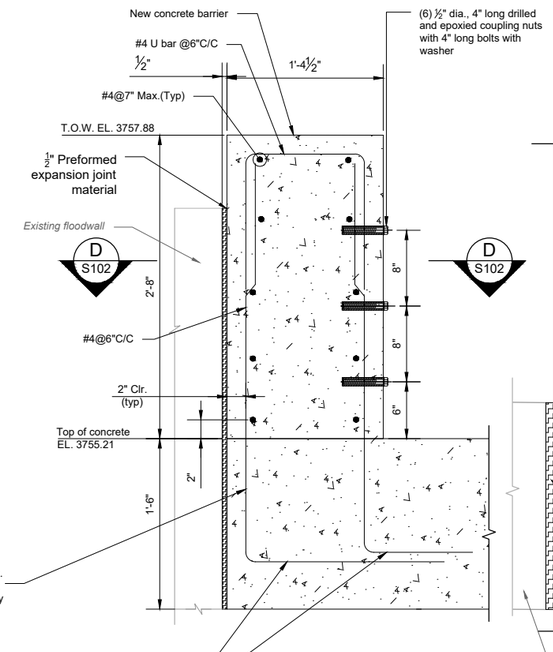

(TRAFFIC CONDITION)

36 CS106 S116 DETAIL
SCALE:1-1/2"=1'-0"

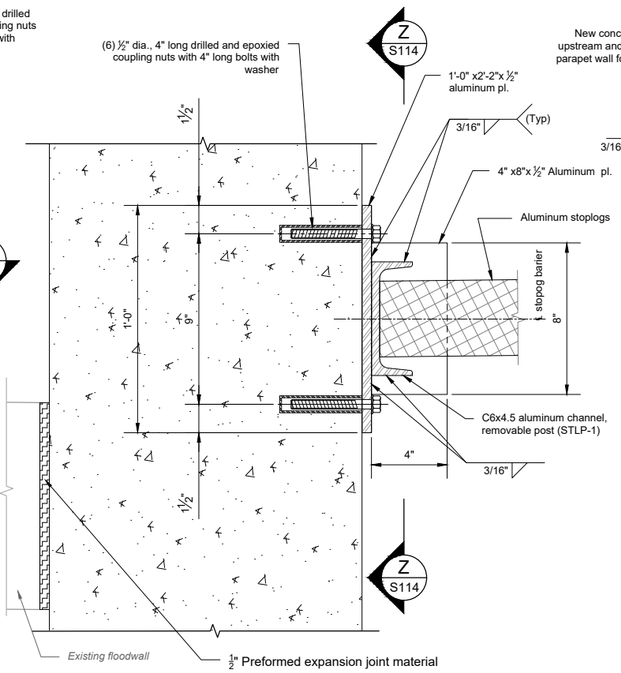

Y S114 SECTION
SCALE:3"=1'-0"

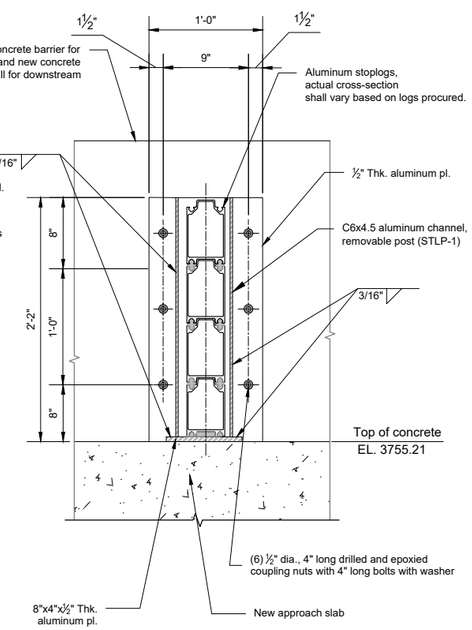

Z S114 SECTION
SCALE:1-1/2"=1'-0"

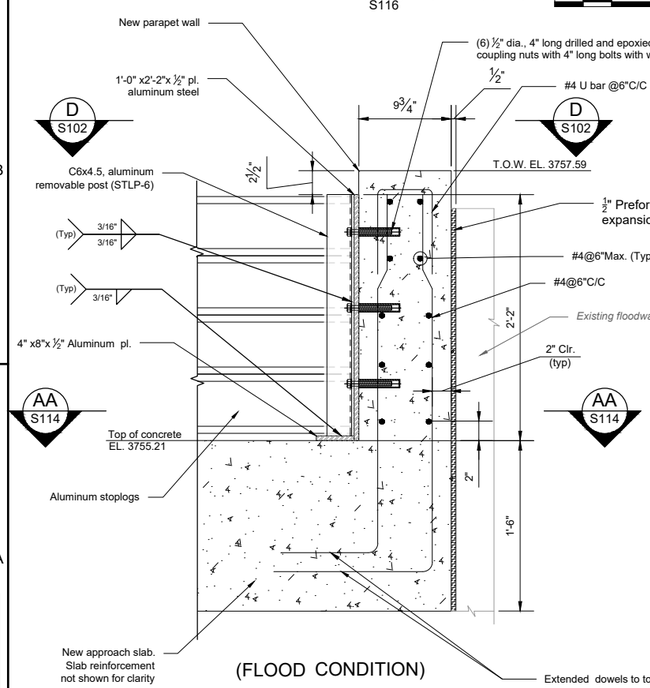

(FLOOD CONDITION)

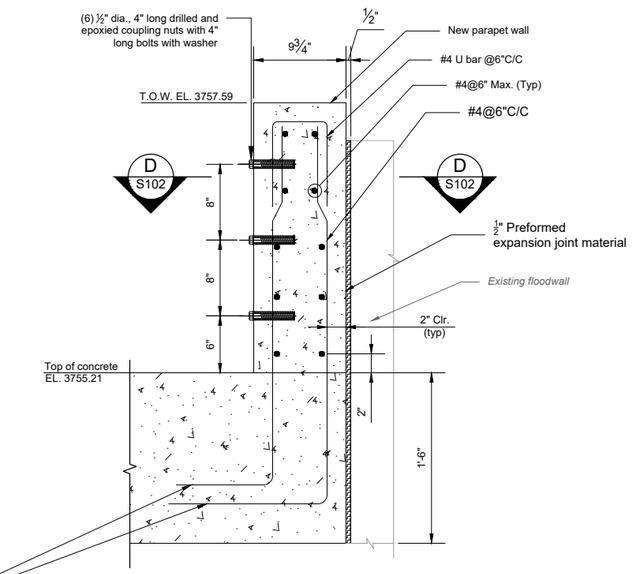

(TRAFFIC CONDITION)

37 CS106 DETAIL
SCALE:1-1/2"=1'-0"

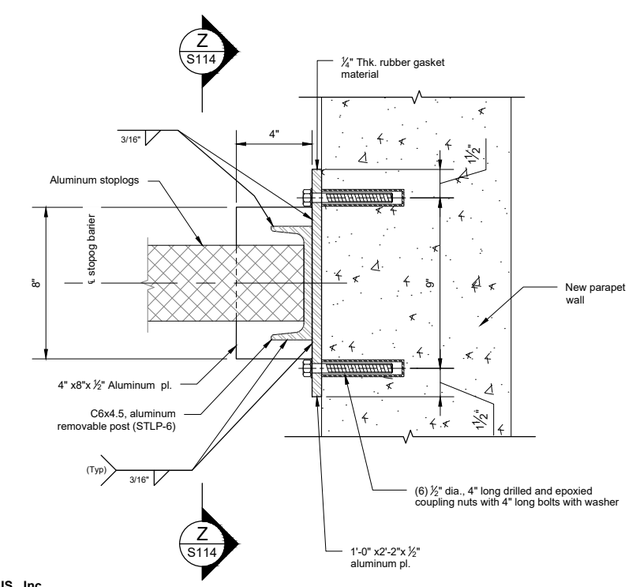

AA S114 SECTION
SCALE:3"=1'-0"

ARCADIS US., Inc.
Texas Registered Engineering Firm F-533

STATE OF TEXAS
KIRK LOWERY
119594
LICENSED
PROFESSIONAL ENGINEER
2/4/2022

Note:

1. All aluminum shall be 6061-T6.
2. Washers shown shall be 1/2" fender washers.
3. All backfill around the bridges is to be backfilled per section 31.23.23.

International Boundary & Water Commission
United States Section

ARCADIS

Munoz & Dannenbaum JV
SBA Approved 8(a) Joint Venture
Mercedes | McAllen | Laredo | El Paso | Houston | Fort Worth | Dallas | Austin

INTERNATIONAL BOUNDARY AND WATER COMMISSION
UNITED STATES AND MEXICO
UNITED STATES SECTION

RIO GRANDE CANALIZATION PROJECT

SUNLAND PARK LEVEE REPAIR

WEST LEVEE

For Construction

REV NO.	SIGNATURE OF DESIGNER AND DATE	DESCRIPTION OF REVISION

Arcadis U.S. Inc.,
IBWC CONTRACTOR NAME

IBM15D0001/IBM17T0010
IBWC CONTRACT/TASK ORDER

Arcadis U.S. Inc.,
DESIGNED BY

USIBWC HQ-ESD 01-28-2022

COUNTRY CLUB BRIDGE WEST-
SECTIONS & DETAILS-II

SOLICITATION/RFP NUMBER
191BWC22R0002

CONTRACT NUMBER
191BWC22C0011

S114

27258-000-00

CAD Filename S114.dwg
SheetSet Name RIO GRANDE CANALIZATION PROJECT
Plot Style Table Name IBWC_B&W.ctb
Plot Scale 1:1
Paper Size ANSI full (sheet D (22.00 x 34.00 Inches))
Plot Device DWG To PDF.pc3
Date and Time Plotted 2/3/2022 7:33 PM
Date Last Saved 2/3/2022 1:02 PM
AutoCAD Version 20.1s (LMS Tech)
IBWC Border V20170817

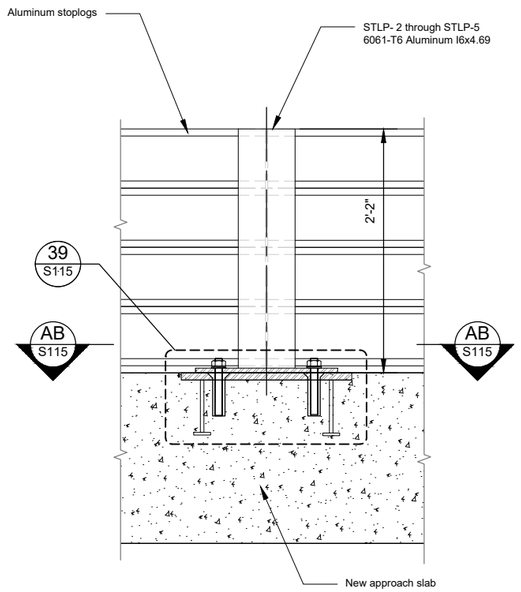

38 CS106 DETAIL
SCALE:1-1/2"=1'-0"

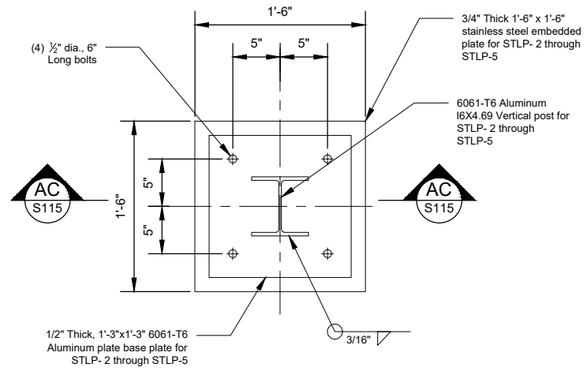

(See note 2)

AB S115 SECTION (FLOOD CONDITION)
SCALE:1-1/2"=1'-0"

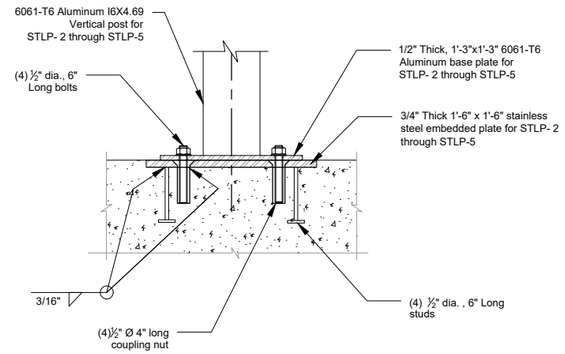

(See note 2)

AC S115 SECTION (FLOOD CONDITION)
SCALE:1-1/2"=1'-0"

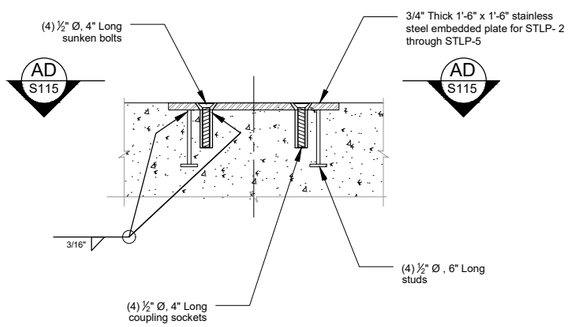

(See note 1)

39 S115 DETAIL (TRAFFIC CONDITION)
SCALE:1-1/2"=1'-0"

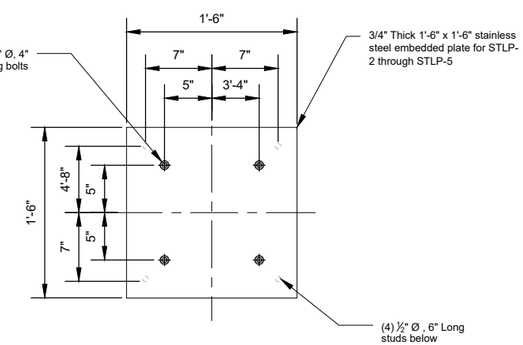

(See note 1)

AD S115 SECTION (TRAFFIC CONDITION)
SCALE:1-1/2"=1'-0"

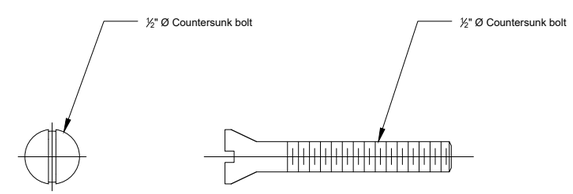

40 S115 TYPICAL COUNTERSUNK BOLT DETAILS
SCALE:3"=1'-0"

Notes:

1. Traffic condition refers to the stage when stoplogs are removed and the bridge is open to traffic.
2. Flood conditions refers to the stage when stoplogs are deployed at the wake of flood event.

ARCADIS US., Inc.
Texas Registered
Engineering Firm F-533

STATE OF TEXAS
KIRK LOWERY
119594
LICENSED
PROFESSIONAL ENGINEER
1/28/2022

International Boundary & Water Commission
United States Section

ARCADIS

Munoz & Dannenbaum JV
SBA Approved 8(a) Joint Venture
Mercedes | McAllen | Laredo | El Paso | Houston | Fort Worth | Dallas | Austin

INTERNATIONAL BOUNDARY AND WATER COMMISSION
UNITED STATES AND MEXICO
UNITED STATES SECTION

RIO GRANDE CANALIZATION PROJECT

SUNLAND PARK LEVEE REPAIR

WEST LEVEE

For Construction

REV NO	SIGNATURE OF RESIGNER AND DATE	DESCRIPTION OF REVISION

Arcadis U.S. Inc.,
IBWC CONTRACTOR NAME

IBM15D0001/IBM17T0010
IBWC CONTRACT/TASK ORDER

Arcadis U.S. Inc.,
DESIGNED BY

USIBWC HQ-ESD 01-28-2022

COUNTRY CLUB BRIDGE WEST - SECTIONS & DETAILS-III

SOLICITATION/RFP NUMBER
191BWC22R0002

CONTRACT NUMBER
191BWC22C0011

S115

27259-000-00

CAD Filename
S115.dwg

SheetSet Name
RIO GRANDE CANALIZATION PROJECT

Plot Style Table Name
IBWC_B&W.ctb

Plot Scale
1:1

Paper Size
ANSI full bleed D (22.00 x 34.00 Inches)

Plot Device
DWG To PDF.pc3

Date and Time Plotted
1/28/2022 3:38 PM

Date Last Saved
1/20/2022 2:09 PM

AutoCAD Version
20.1s (LMS Tech)

IBWC Border V20170817

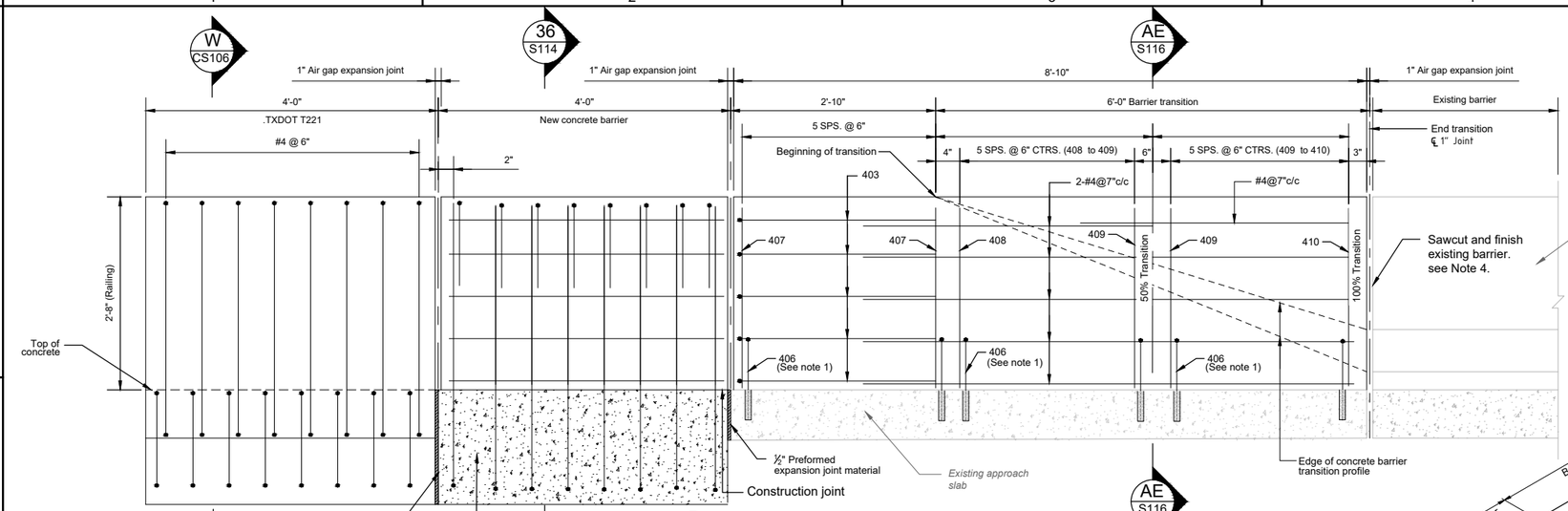

41 S116 BARRIER RAILING TRANSITION ELEVATION

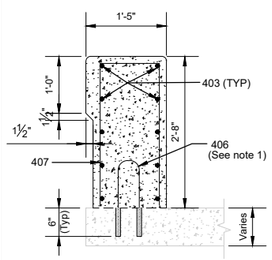

BEGIN TRANSITION

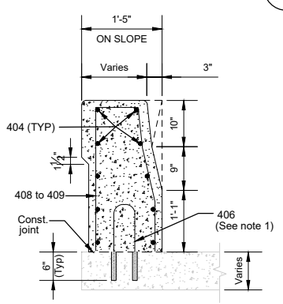

FROM BEGIN TO 50% TRANSITION

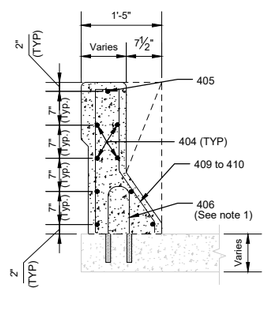

FROM 50% TO 100% TRANSITION

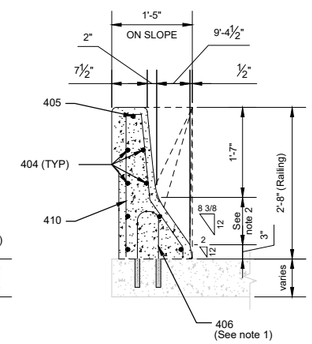

100% TRANSITION

AE S116 SECTION THROUGH VERTICAL TRANSITION

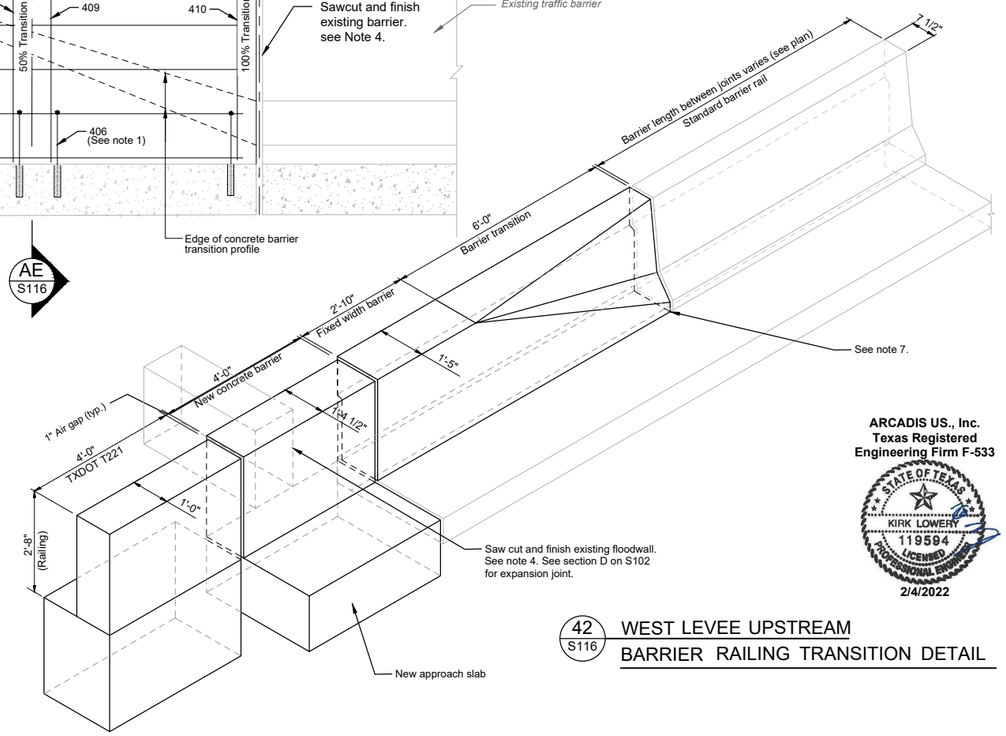

42 S116 WEST LEVEE UPSTREAM BARRIER RAILING TRANSITION DETAIL

ARCADIS US., Inc.
Texas Registered Engineering Firm F-533

STATE OF TEXAS
KIRK LOWERY
119594
LICENSED
PROFESSIONAL ENGINEER
2/4/2022

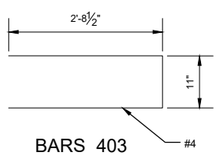

BARS 403 (2" Ø PIN)

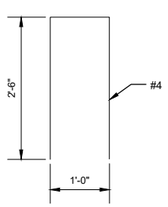

BARS 407 (2" Ø PIN)

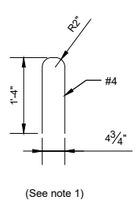

BARS 406 (2" Ø PIN)

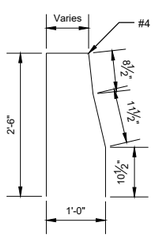

BARS 408 (2" Ø PIN)

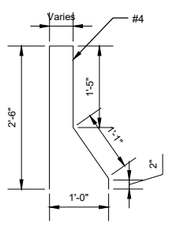

BARS 409 (2" Ø PIN)

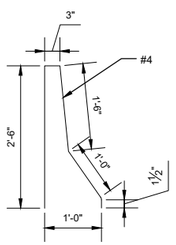

BARS 410 (2" Ø PIN)

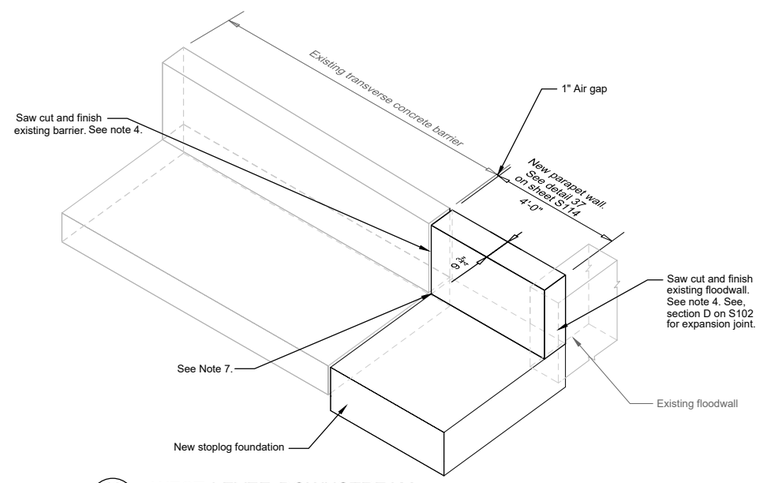

43 S116 WEST LEVEE DOWNSTREAM NEW PARAPET WALL AND EXISTING CONCRETE BARRIER DETAIL

Notes:

1. Keep existing dowels if they are at least 2 inch away from new barrier face rebars. Otherwise, cut existing dowels flush with top of slab. Drill and epoxy new U-bar dowels by placing them in between existing dowel locations.
2. As per field conditions. Match with existing adjacent barrier.
3. Adjacent concrete barriers shall have a one inch air gap throughout.
4. Saw cut and repair concrete traffic rail or floodwall following steps below.
   a. Cut existing concrete offset 1/2" inboard from finish line for floodwalls or offset 1" inboard from finish line for traffic rails.
   b. Remove any vertical reinforcement if it shows up on the cut surface.
   c. Core out concrete around horizontal rebar with 1.5 inches diameter coring bit. The depth of core shall be 1.5 inches.
   d. Remove loose concrete to expose horizontal rebar.
   e. Using a flame torch, cut off the extruding rebar flush with concrete. This operation shall be done quickly to avoid applying excessive heat to concrete.
   f. After all the horizontal rebars are cut, remove all lose concrete and dust.
   g. Fill up the cores around rebars and finish the vertical surface up to required dimension using non-shrink grout. Follow all required steps as per grout manufacturer's recommendation.
5. All dimensions shall be field verified.
6. All longitudinal rebars shall be dimensioned based on clear cover requirements and utilizing rebar table on sheet S102.
7. Match inside face of the new concrete barrier and parapet wall with bottom most inside face of the adjacent existing barrier.

International Boundary & Water Commission
United States Section

ARCADIS

Munoz & Dannenbaum JV
SBA Approved 8(a) Joint Venture
Mercedes | McAllen | Laredo | El Paso | Houston | Fort Worth | Dallas | Austin

INTERNATIONAL BOUNDARY AND WATER COMMISSION
UNITED STATES AND MEXICO
UNITED STATES SECTION

RIO GRANDE CANALIZATION PROJECT

SUNLAND PARK LEVEE REPAIR

WEST LEVEE

For Construction

REV. NO.	SIGNATURE OF DESIGNER AND DATE	DESCRIPTION OF REVISION

Arcadis U.S. Inc.
IBWC CONTRACTOR NAME

IBM15D0001/IBM17T0010
IBWC CONTRACT/TASK ORDER

Arcadis U.S. Inc.
DESIGNED BY

USIBWC HQ-ESD 01-28-2022

COUNTRY CLUB BRIDGE WEST- BARRIER RAILING & TRANSITION

SOLICITATION/RFP NUMBER
191BWC22R0002

CONTRACT NUMBER
191BWC22C0011

S116

27260-000-00

CAD Filename S116.dwg
SheetSet Name RIO GRANDE CANALIZATION PROJECT
Plot Style Table Name IBWC_B&W.ctb
Plot Scale 1:1
Paper Size ANSI full bleed D (22.00 x 34.00 Inches)
Plot Device DWG To PDF.pc3
Date and Time Plotted 2/3/2022 12:04 PM
Date Last Saved 1/28/2022 3:47 PM
AutoCAD Version 20.1s (LMS Tech)
IBWC Border V20170817

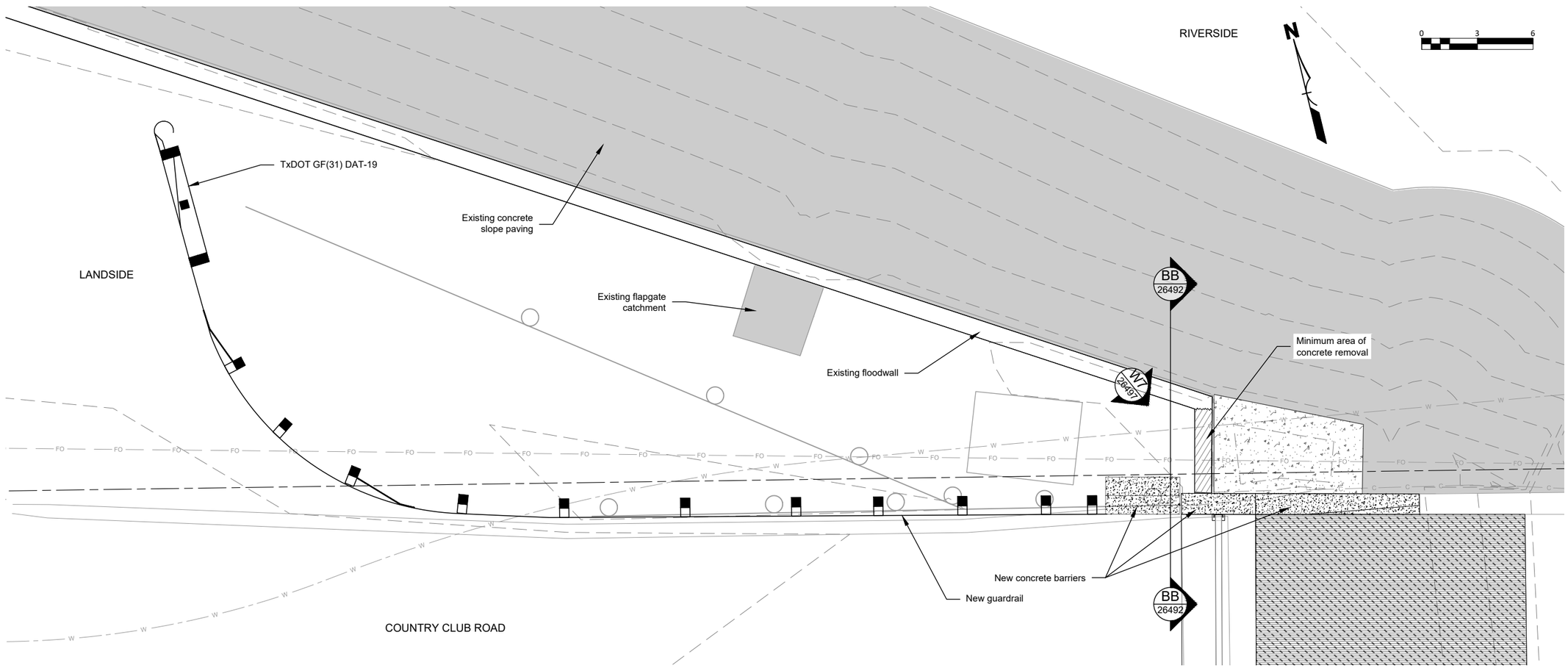

PLAN VIEW

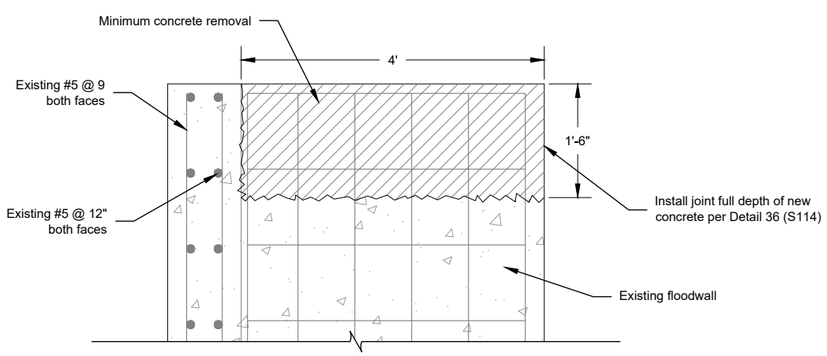

BB 26492 FLOODWALL REPAIR

NOTES:

1. See CS105 for layout of all items.
2. Perform this work prior to constructing the new concrete barrier shown in Detail 36 (S114).
3. Remove all damaged concrete taking care to retain existing rebar. Replace any damaged rebar.
4. Prepare and restore concrete per Specification Section 03.35.00 under 3.6. Concrete Repair.
5. Existing floodwall was constructed under IBM10C0018. Reinforcement shown is based upon drawings for that contract.
6. Reference arrow for Detail W7 (26497) indicates approximate location and direction of photo shown on 26497.

STATE OF TEXAS
ANDREA GLOVER
113650
LICENSED
PROFESSIONAL ENGINEER
04-04-2022

International Boundary & Water Commission
United States Section

INTERNATIONAL BOUNDARY AND WATER COMMISSION
UNITED STATES AND MEXICO
UNITED STATES SECTION

RIO GRANDE CANALIZATION PROJECT

SUNLAND PARK LEVEE REPAIR

WEST LEVEE

CONSTRUCTION DRAWING

REVISION	DESCRIPTION OF REVISION	DESIGNER INITIALS	DATE

Andrea Glover, PE
DESIGNED

A. Glover
DRAWN

CHECKED

TECHNICAL APPROVAL

ADMIN APPROVAL

USIBWC HQ-CON 04-04-2022

COUNTRY CLUB BRIDGE
WEST FLOODWALL
REPAIR

IFB/RFP NUMBER	CONTRACT NUMBER
191BWC22R0002	191BWC22C0011

CONTRACTOR/DESIGNER DRAWING NUMBER

USIBWC DRAWING NUMBER

26492-000-00

CAD Filename 26492.dwg
SheetSet Name ####
Plot Style Table Name IBWC_B&W.ctb
Plot Scale 1:1
Paper Size ANSI full Bleed D (22.00 X 34.00 Inches)
Plot Device DWG To PDF.pc3
Date and Time Plotted 4/6/2022 4:09 PM
Date Last Saved 4/5/2022 2:24 PM
AutoCAD Version 22.0s (LMS Tech)

IBWC Border V20210903