INTERNATIONAL BOUNDARY
AND WATER COMMISSION
UNITED STATES SECTION

CONSTRUCTION PLANS

RIO GRANDE CANALIZATION PROJECT
SUNLAND PARK LEVEE
COUNTRY CLUB BRIDGE
WEST STOPLOG REHABILITATION
EL PASO COUNTY, TEXAS

AUGUST 6, 2026

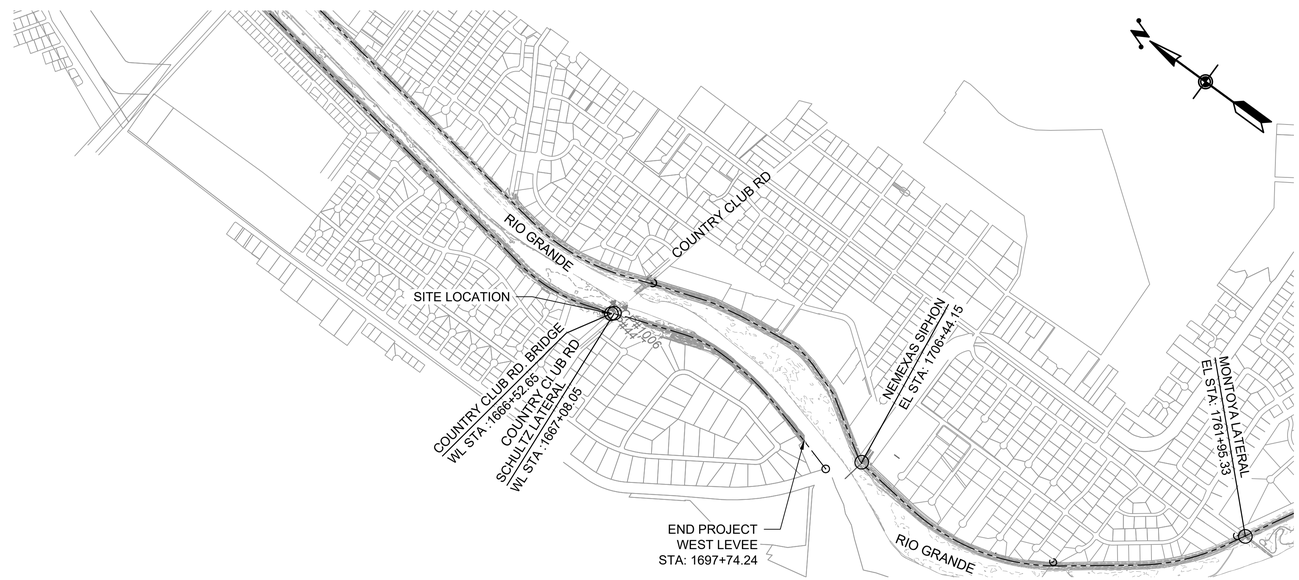

LOCATION MAP

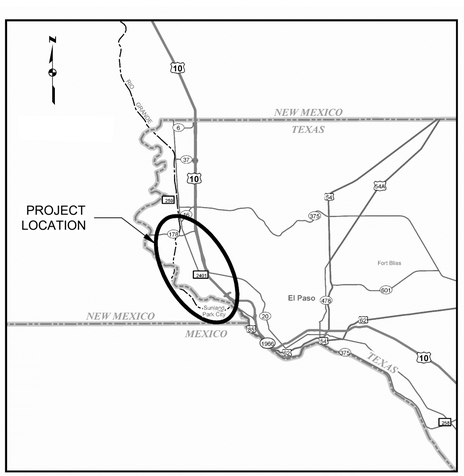

VICINITY MAP

PROJECT DESCRIPTION

International Boundary & Water Commission - United States Section Sunland Park Levee Repair - East Levee (approximately 8.4 miles along the east bank of the Rio Grande) and West Levee (approximately 0.6 miles along the west bank of the Rio Gande)
EL Paso County, Texas & Doña Ana County, New Mexico
East Levee From STA. 1511+19.16 to STA. 1956+25.86
West Levee From STA. 1666+52.65 to STA. 1697+74.24.

ARCADIS Design & Consultancy for natural and built assets

SOLICITATION NO. 191BWC26B0013

28463-000-01

INDEX OF SHEETS	
DWG. NO.	**DESCRIPTION**
G001	COVER SHEET
G002	SHEET INDEX, GENERAL NOTES, LEGEND AND SYMBOLS
CS105A	COUNTRY CLUB BRIDGE WEST JOINT REPAIR PLAN
S113A	COUNTRY CLUB BRIDGE WEST JOINT REPAIR DETAIL

GENERAL NOTES

1.1 DO NOT SCALE DRAWINGS. ALL DIMENSIONS SHALL BE AS INDICATED ON THE PLAN. CONTRACTOR SHALL VERIFY ALL DIMENSIONS AND CONDITIONS AT THE JOB SITE BEFORE COMMENCING WORK.

1.2 HORIZONTAL DATUM IS BASED ON THE NEW MEXICO STATE PLANE COORDINATE GRID SYSTEM (NMSPCGS), NEW MEXICO CENTRAL ZONE NORTH AMERICAN DATUM OF 1983 (NAD 83), IN U.S. SURVEY FEET USING GEOID 2012A. VERTICAL DATUM IS BASED ON NORTH AMERICAN VERTICAL DATUM OF 1988 (NAVD 88), IN U.S. SURVEY FEET.

1.3 REFERENCE STATIONING AND OFFSETS REFER TO THE CENTERLINE (℄) ALIGNMENT, UNLESS OTHERWISE NOTED. ALL PROPOSED HORIZONTAL DIMENSIONS, RADIAL DIMENSIONS, STATIONS AND OFFSETS REFER TO THE EARTHEN LEVEE, NOT THE GRAVEL ROAD, UNLESS OTHERWISE NOTED. ALL PROPOSED ELEVATIONS REFER TO THE EARTHEN LEVEE, NOT THE GRAVEL ROAD OR THE TOPSOIL TREATMENT, UNLESS OTHERWISE NOTED.

1.4 ALL CONSTRUCTION ENTRANCES SHALL BE APPROVED BY THE USIBWC OR PRIVATE LANDOWNERS.

1.5 REMOVE ALL TRASH, RUBBLE, AND DEBRIS (INCLUDING BURIED TRASH AND DEBRIS) LOCATED WITHIN THE PROJECT LIMITS AND DISPOSE OF AT AN APPROVED SITE. PROVIDE GENERAL HOUSEKEEPING OF TRASH, RUBBLE, AND DEBRIS DURING CONSTRUCTION TO MAINTAIN A CLEAN CONSTRUCTION SITE FOR THE DURATION OF THE PROJECT. CONTRACTOR SHALL PAY FOR ALL ASSOCIATED DUMPING FEES.

1.6 ANY INFRASTRUCTURE LOCATED WITHIN THE CITY OF EL PASO RIGHT-OF-WAY MUST FOLLOW THE DESIGN STANDARDS FOR CONSTRUCTION, IN ACCORDANCE WITH ITS MUNICIPAL CODE.

1.7 ANY DAMAGED INFRASTRUCTURE AS A RESULT OF THIS PROJECT SHALL BE RESTORED TO THE SAME OR BETTER CONDITION.

1.8 ALL TRANSITIONS TO EXISTING INFRASTRUCTURE SHALL BE SMOOTH AND FREE OF TRIPPING HAZARDS.

1.9 A CERTIFICATE OF COMPLETION FROM THE CITY OF EL PASO SHALL BE OBTAINED FOR PROJECT COMPLETION.

EXISTING UTILITY COORDINATION

2.1 THE EXISTING UTILITY FEATURES SHOWN ARE BASED ON AN ABOVE-GROUND FIELD SURVEY AND DATA PROVIDED BY FRANCHISE UTILITY COMPANIES AND MAY NOT INCLUDE ALL UTILITIES AT THE SITE. PRIOR TO THE START OF ANY CONSTRUCTION, VERIFY AND CONFIRM THE EXISTENCE AND LOCATION, DEPTH AND HEIGHT OF ALL UTILITIES, INCLUDING THE USE OF PRIVATE SUBSURFACE UTILITY LOCATING SERVICE AS NECESSARY.

2.2 THE EXISTENCE, LOCATION AND CHARACTERISTICS OF UNDERGROUND UTILITY INFORMATION SHOWN ON THESE PLANS HAS BEEN OBTAINED FROM A REVIEW OF AVAILABLE RECORD DATA. NO REPRESENTATION IS MADE AS TO THE ACCURACY OR COMPLETENESS OF THE INFORMATION. CONTRACTOR SHALL FIELD VERIFY ALL DIMENSIONS, SIZES, LOCATIONS, AND QUANTITIES OF ALL EXISTING UTILITIES, AND TO RESOLVE ALL DISCREPANCIES PRIOR TO THE COMMENCEMENT OF ANY WORK.

2.3 ANY REQUIRED RELOCATION OR ADJUSTMENT OF EXISTING UTILITIES SHALL BE COMPLETED BY THE UTILITY OWNER PRIOR TO CONSTRUCTION. THE RELOCATION SHALL BE BASED UPON THE TERMS OF THE UTILITY OWNER'S USIBWC LICENSE AND WILL BE COMPLETED AT NO COST TO THE CONTRACTOR. THE CONTRACTOR SHALL PERFORM UTILITIES LOCATES AND SURVEYS AS SOON AS POSSIBLE SO THAT UTILITY OWNERS CAN BE NOTIFIED OF REQUIRED RELOCATIONS AND WORK CAN PROCEED WITHOUT DELAYING CONSTRUCTION ACTIVITIES.

2.4 CONTACT "TEXAS 811" (811 OR 1-800-344-8377) AND "NEW MEXICO 811" (811 OR 1-800-321-2537) AT LEAST 48 HOURS PRIOR TO BEGINNING WORK TO LOCATE ANY UTILITIES WITHIN THE WORK ZONE. PROVIDE WRITTEN DOCUMENTATION TO THE COR THAT "TEXAS 811" AND "NM 811" WERE CONTACTED AND ALL UTILITIES WERE LOCATED WITHIN OR ADJACENT TO THE PROJECT LIMITS.

TEMPORARY TRAFFIC CONTROL

3.1 FULL CLOSURE OF COUNTRY CLUB BRIDGE IS PREFERRED TO COMPLETE THE WORK IN ONE CONTINUOUS OPERATION, SUBJECT TO APPROVAL BY THE CITY OF EL PASO. IF FULL CLOSURE IS NOT APPROVED, THE CONTRACTOR SHALL MAINTAIN AT LEAST ONE LANE OF TRAFFIC OR SHIFT TRAFFIC AS PERMITTED BY THE APPROVED TRAFFIC CONTROL PLAN.

3.2 TEMPORARY TRAFFIC CONTROL SHALL BE IN COMPLIANCE WITH TEXAS DEPARTMENT OF TRANSPORTATION REQUIREMENTS AND TEXAS MANUAL ON UNIFORM TRAFFIC CONTROL DEVICES (TMUTCD).

3.3 SUBMIT TRAFFIC CONTROL PERMIT AT LEAST TWO WEEKS PRIOR TO THE START OF WORK. CONTRACTOR IS REQUIRED TO COMPLY WITH THE PERMIT CONDITIONS FOR THE DURATION OF THE WORK.

STREET ILLUMINATION (CITY OF EL PASO)

4.1 THE STREETS AND MAINTENANCE DEPARTMENT DOES NOT LINE-SPOT STREETLIGHTS. CONTRACTORS MUST PROVIDE THEIR OWN LINE SPOTTING AND POTHOLING PRIOR TO CONSTRUCTION.

4.2 CONTRACTORS SHALL VERIFY THAT ALL STREETLIGHTS ARE OPERATIONAL AND IN GOOD CONDITION PRIOR TO WORK.

4.3 PRE-EXISTING ISSUES (DAMAGED CONDUITS, WIRING, ETC.) SHALL BE DOCUMENTED AND REPORTED TO THE STREET LIGHT INSPECTOR PRIOR TO CONSTRUCTION, PREFERABLY DURING THE PRECONSTRUCTION MEETING.

4.4 ANY CLAIMS OF PREEXISTING DAMAGE AFTER WORK BEGINS WILL BE THE CONTRACTOR'S RESPONSIBILITY.

4.5 ANY DAMAGES TO STREETLIGHTS, CONDUITS, OR WIRING DURING WORK SHALL BE REPAIRED BY THE CONTRACTOR AT THEIR EXPENSE.

4.6 CONTRACTORS SHALL REPORT AND COORDINATE ALL DAMAGES, REPAIRS, AND INSPECTIONS WITH THE STREET LIGHT INSPECTOR BEFORE FINAL RESTORATION AND INSPECTION.

4.7 FOR STREETLIGHT INSPECTION OR REPAIR QUESTIONS, CONTACT:
CARLOS JAQUEZ - (915) 497-7478 / JAQUEZC@ELPASOTEXAS.GOV

4.8 THE EXISTING STREET ILLUMINATION SYSTEM SHALL BE PROTECTED AND PRESERVED.

LEGEND

- USIBWC R.O.W. line
- Restoration limit
- Water line
- Fiber optic
- Electric conduit
- Existing major contours
- Guardrail
- Concrete
- Structural steel
- Compacted subgrade
- Preformed expansion joint material
- New aggregate roadway - Section view
- Detectable warning system
- Existing Concrete Slope Paving

SYMBOL LEGEND

- Existing benchmark
- Down guy
- Boulder
- Valve
- Sign
- Site post
- Wood post
- Tree
- Pine tree
- Shrub
- Vehicular gate
- Title markers (ID / DWG# / TITLE / SUBTITLE)
- Detail markers (ID / DWG#)

ARCADIS US., Inc.
Texas Registered
Engineering Firm F-533

STATE OF TEXAS
KIRK LOWERY
119594
LICENSED
PROFESSIONAL ENGINEER

2/24/2026

International Boundary & Water Commission
United States Section

ARCADIS Design & Consultancy for natural and built assets

INTERNATIONAL BOUNDARY AND WATER COMMISSION
UNITED STATES AND MEXICO
UNITED STATES SECTION

RIO GRANDE CANALIZATION PROJECT

SUNLAND PARK LEVEE REPAIR

EAST LEVEE

For Construction

REV NO.	DATE	DESCRIPTION OF REVISION
2	08/06/2026 Crystal Cadillo, PE	Corrected Index and TCP Note
1	07/07/2026 Crystal Cadillo, PE	Added Notes per City Review

Arcadis U.S. Inc.,
IBWC CONTRACTOR NAME

IBM15D001/IBM17T0010
IBWC CONTRACT/TASK ORDER

Arcadis U.S. Inc.,
DESIGNED BY

USIBWC HQ-ESD 01-28-2022

SHEET INDEX AND GENERAL NOTES

SOLICITATION/RFP NUMBER
191BWC26B0013

CONTRACT NUMBER

G002

28464-000-02

CAD Filename G002.dwg
SheetSet Name RIO GRANDE CANALIZATION PROJECT
Plot Style Table Name IBWC_2BW.ctb
Plot Scale 1:1
Paper Size ANSI full bleed D (22.00 x 34.00 Inches)
Plot Device DWG To PDF.pc3
Date and Time Plotted 7/7/2026 1:58 PM
Date Last Saved 7/7/2026 1:32 PM
AutoCAD Version 24.2s (LMS Tech)
IBWC Border V20170817

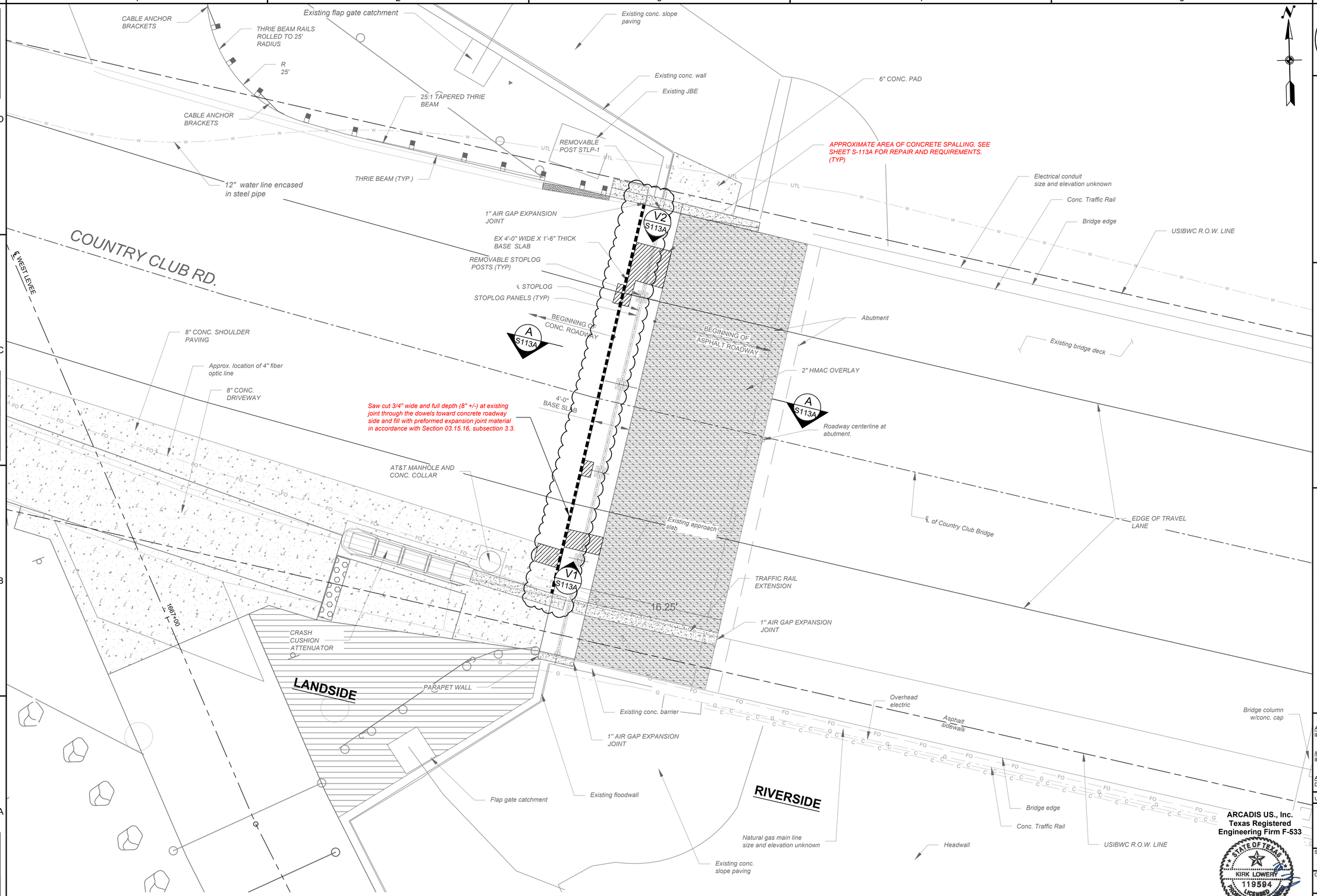

OVERALL PLAN WITH STOPLOG LAYOUT

SCALE: 1" = 5'-0"

ARCADIS US., Inc.
Texas Registered Engineering Firm F-533

STATE OF TEXAS
KIRK LOWERY
119594
LICENSED PROFESSIONAL ENGINEER

2/24/2026

International Boundary & Water Commission
United States Section

ARCADIS Design & Consultancy for natural and built assets

INTERNATIONAL BOUNDARY AND WATER COMMISSION
UNITED STATES AND MEXICO
UNITED STATES SECTION

RIO GRANDE CANALIZATION PROJECT

SUNLAND PARK LEVEE REPAIR

WEST LEVEE

For Construction

REV. NO.	SIGNATURE OF RESPONSIBLE PARTY	DATE	DESCRIPTION OF REVISION
1	Crystal Cadillo, PE	08/06/2026	Corrected Callout Notes

Arcadis U.S. Inc.,
IBWC CONTRACTOR NAME

IBM15D001/IBM17T0010
IBWC CONTRACT/TASK ORDER

Arcadis U.S. Inc.,
DESIGNED BY

USIBWC HQ-ESD 01-28-2022

COUNTRY CLUB BRIDGE WEST JOINT REPAIR PLAN

SOLICITATION/RFP NUMBER
191BWC26B0013

CONTRACT NUMBER

CS105A

28465-000-01

CAD Filename CS105A.dwg
Sheet/Set Name RIO GRANDE CANALIZATION PROJECT
Plot Style Table Name IBWC_B&W.ctb
Plot Scale 1:1
Paper Size ANSI full bleed D (22.00 x 34.00 Inches)
Plot Device DWG To PDF.pc3
Date and Time Plotted 2/23/2026 12:42 PM
Date Last Saved 2/23/2026 12:31 PM
AutoCAD Version 24.2s (LMS Tech)

IBWC Border V20170817

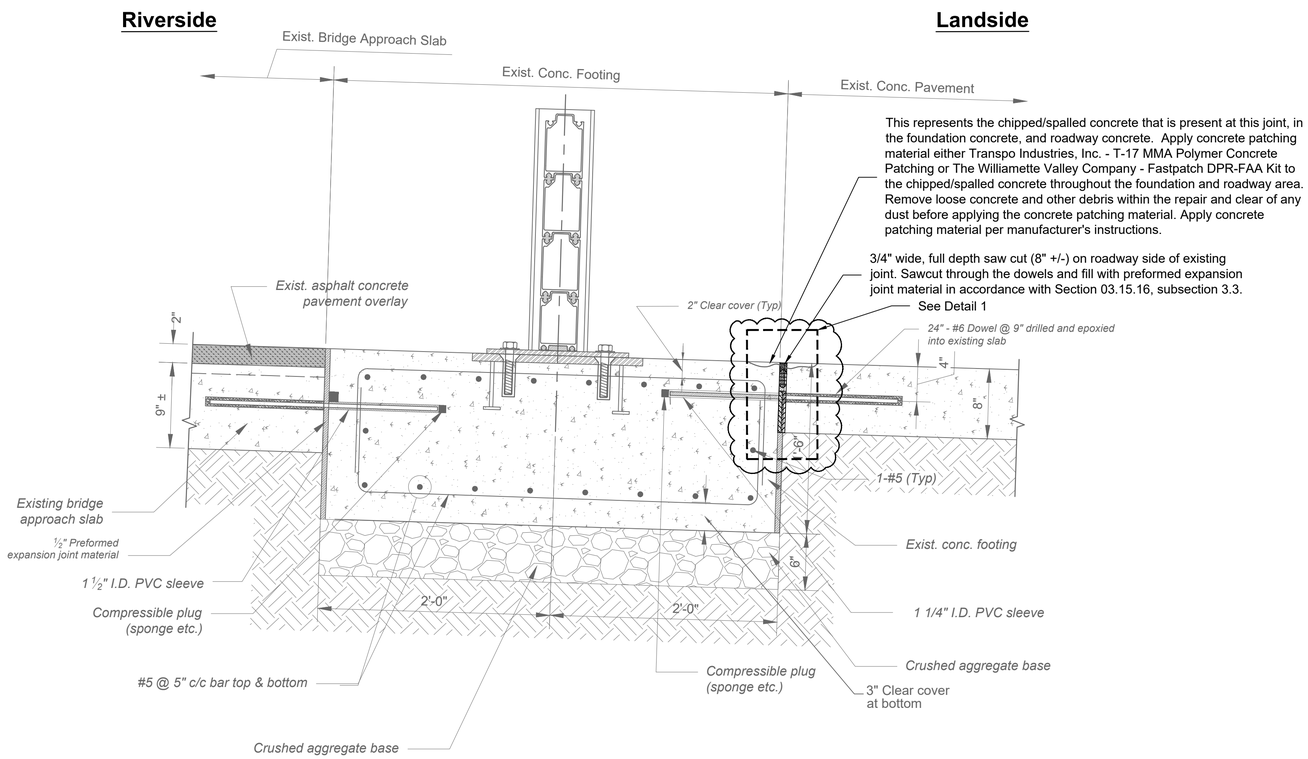

A-A CS105A SECTION THROUGH STOP LOG GATE FOOTING
SCALE:1-1/2"=1'-0"

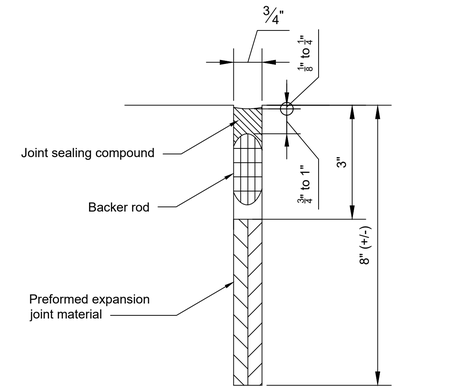

1 CS105A DETAIL - EXPANSION JOINT
SCALE:6"=1'-0"

1 CS105A VIEW 1 - LOOKING NORTH
SCALE:N.T.S.

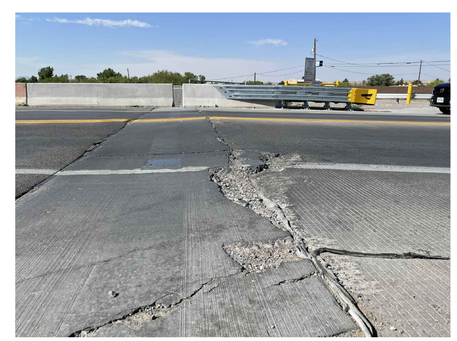

2 CS105A VIEW 2 - LOOKING SOUTH
SCALE:N.T.S.

ARCADIS US., Inc.
Texas Registered
Engineering Firm F-533

STATE OF TEXAS
KIRK LOWERY
119594
LICENSED
PROFESSIONAL ENGINEER
2/24/2026

International Boundary & Water Commission
United States Section

ARCADIS Design & Consultancy for natural and built assets

INTERNATIONAL BOUNDARY AND WATER COMMISSION
UNITED STATES AND MEXICO
UNITED STATES SECTION

RIO GRANDE CANALIZATION PROJECT

SUNLAND PARK LEVEE REPAIR

WEST LEVEE

For Construction

REV. NO.	SIGNATURE OF RESPONSIBLE PERSON	DATE	DESCRIPTION OF REVISION
1	Crystal Cadillo, PE	08/06/2026	Corrected Callout Note

Arcadis U.S. Inc.,
IBWC CONTRACTOR NAME

IBM15D001/IBM17T0010
IBWC CONTRACT/TASK ORDER

Arcadis U.S. Inc.,
DESIGNED BY

USIBWC HQ-ESD 01-28-2022

COUNTRY CLUB
BRIDGE WEST -
JOINT REPAIR DETAIL

SOLICITATION/RFP NUMBER
191BWC26B0013

CONTRACT NUMBER

S113A

28466-000-01

CAD Filename S113A.dwg
SheetSet Name RIO GRANDE CANALIZATION PROJECT
Plot Style Table Name IBWC_B&W.ctb
Plot Scale 1:1
Paper Size ANSI full bleed D (22.00 x 34.00 Inches)
Plot Device DWG To PDF.pc3
Date and Time Plotted 2/24/2026 8:52 AM
Date Last Saved 2/24/2026 8:51 AM
AutoCAD Version 24.2s (LMS Tech)
IBWC Border V20170817