INDIAN HILLS PUMPING STATION

SUBMITTAL DATA

FOR

[redacted]

15FHC-1 STAGE GOULD'S PUMP BOWL

75HP 4-POLE SUBMERSIBLE PUMP

GOULDS WATER TECHNOLOGY

HITACHI SUBMERSIBLE MOTOR COMPANY

SUPPLIED BY:

[redacted]

INDEX

PUMP SUBMITTAL

- 15FHC PUMP DATA SHEET
- DIMENSIONAL OUTLINE
- HYDRAULIC ANALYSIS
- SECTIONAL
- ADDITIONAL PUMP COMPONENTS
-

HITACHI SUBMERSIBLE MOTOR SUBMITTAL

- 4POLE (1800RPM) MOTOR DRAWING
- PERFORMANCE DATA TABLE
- WATER VELOCITY & TEMP VS SERVICE FACTOR
- THRUST BEARINGS POWER LOSS
- POWER FACTOR IMPROVEMENT
- MOTOR CURVE
- CUTAWAY PARTS VIEW
- PART WINDING STARTING
- HANDLING INSTRUCTIONS
- SERVICE MANUAL
- SPECIAL APPLICATIONS REQUIREMENTS

CASING SUBMITTAL

- (1) 36” x 23’ TEE INTAKE STRUCTURE WITH AIR LINE
- (2) 36” CONE STRAINER 304SS
- (3) 36” X 20’ FLANGED CASING WITH AIR-LINE

PUMP DATA SHEET Submersible 60 Hz

[redacted]

Customer: Flint Hills (Indian Hills)

Order No:

Pump:

Size: 15FHC (1 stages)

Type: Submersible
Synch speed: 1800 rpm

Speed: 1740 rpm
Dia: 9.125 in

Curve: E6415FAPCO

Specific Speeds: Ns: 4600

Pump Notes for Standard Sizes:
Discharge Sizes-12",14"

Vertical Turbine:
Bowl size: 14.75 in
Max lateral: 1.25 in
Thrust K factor: 30 lb/ft

Pump Limits for Standard Construction:

Temperature: 120 °F
Sphere size: 1.62 in

Pressure: 260 psi g

Search Criteria:

Flow: 5000 US gpm

Head: 42 ft

Fluid:

Water
SG: 1.002
Viscosity: 1.105 cP

Temperature: 60 °F
Vapor pressure: 0.2563 psi a
Atm pressure: 14.7 psi a

NPSHa: --- ft

Motor:

Standard: NEMA

Size: 100 hp
Speed: 1800

Sizing criteria: Max Power on Design Curve

---- Data Point ----
Flow: 5000 US gpm
Head: 44.9 ft
Eff: 73.7%
Power: 76.8 hp
NPSHr: 36.3 ft

-- Design Curve --
Shutoff Head: 102 ft
Shutoff dP: 44.3 psi
Min Flow: --- US gpm
BEP: 81.3% eff
@ 4230 US gpm
NOL Pwr: 96.8 hp
@ 96.6 US gpm

-- Max Curve --
Max Pwr: 104 hp
@ 5081 US gpm

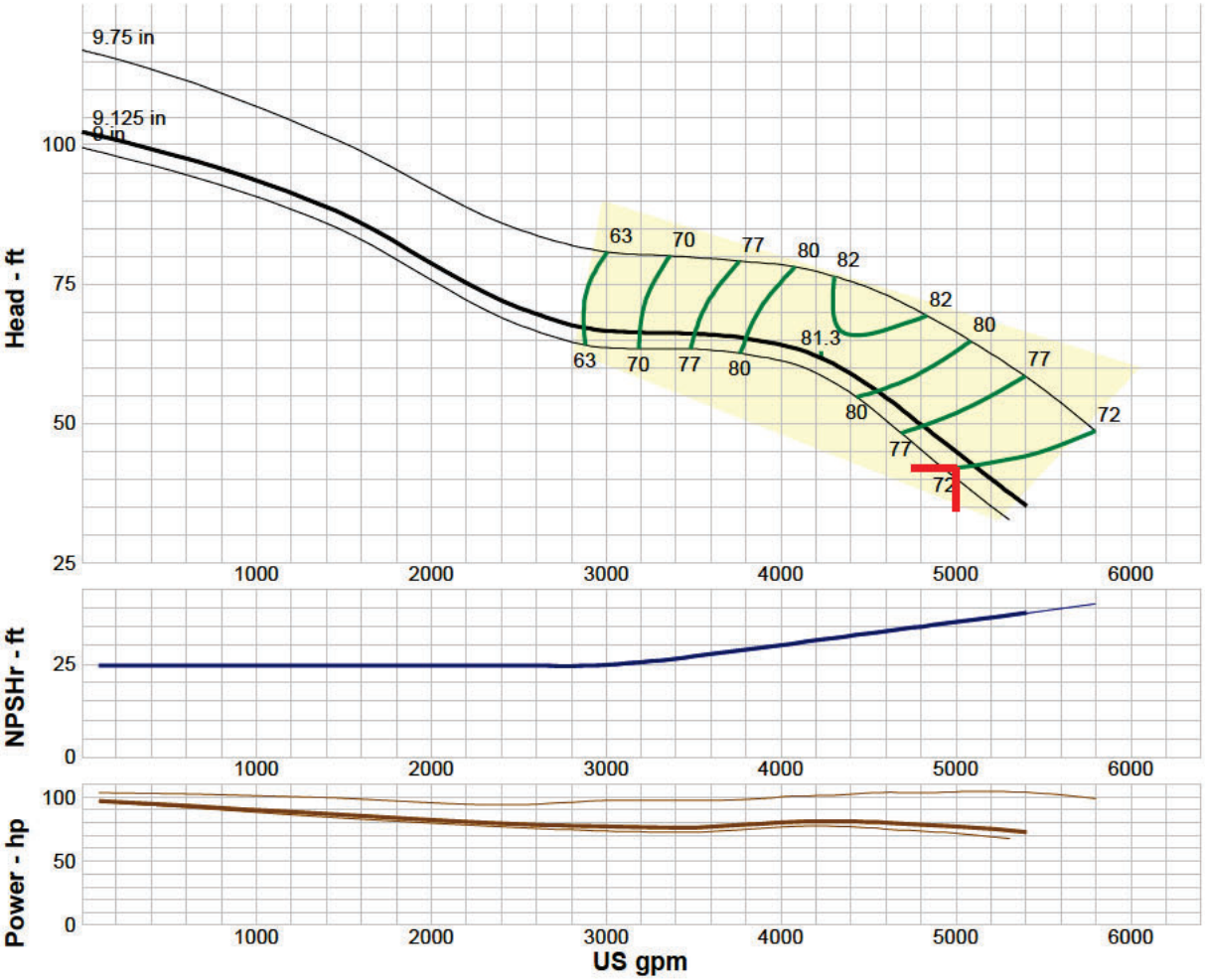

Performance Evaluation:

Flow US gpm	Speed rpm	Head ft	Efficiency %	Power hp	NPSHr ft
6000	1710	---	---	---	---
5000	1710	44.9	73.7	76.8	36.3
4000	1710	63.6	80.6	79.7	30.2
3000	1710	66.8	65.9	77	24.9
2000	1710	79.1	47.6	82.5	24.6

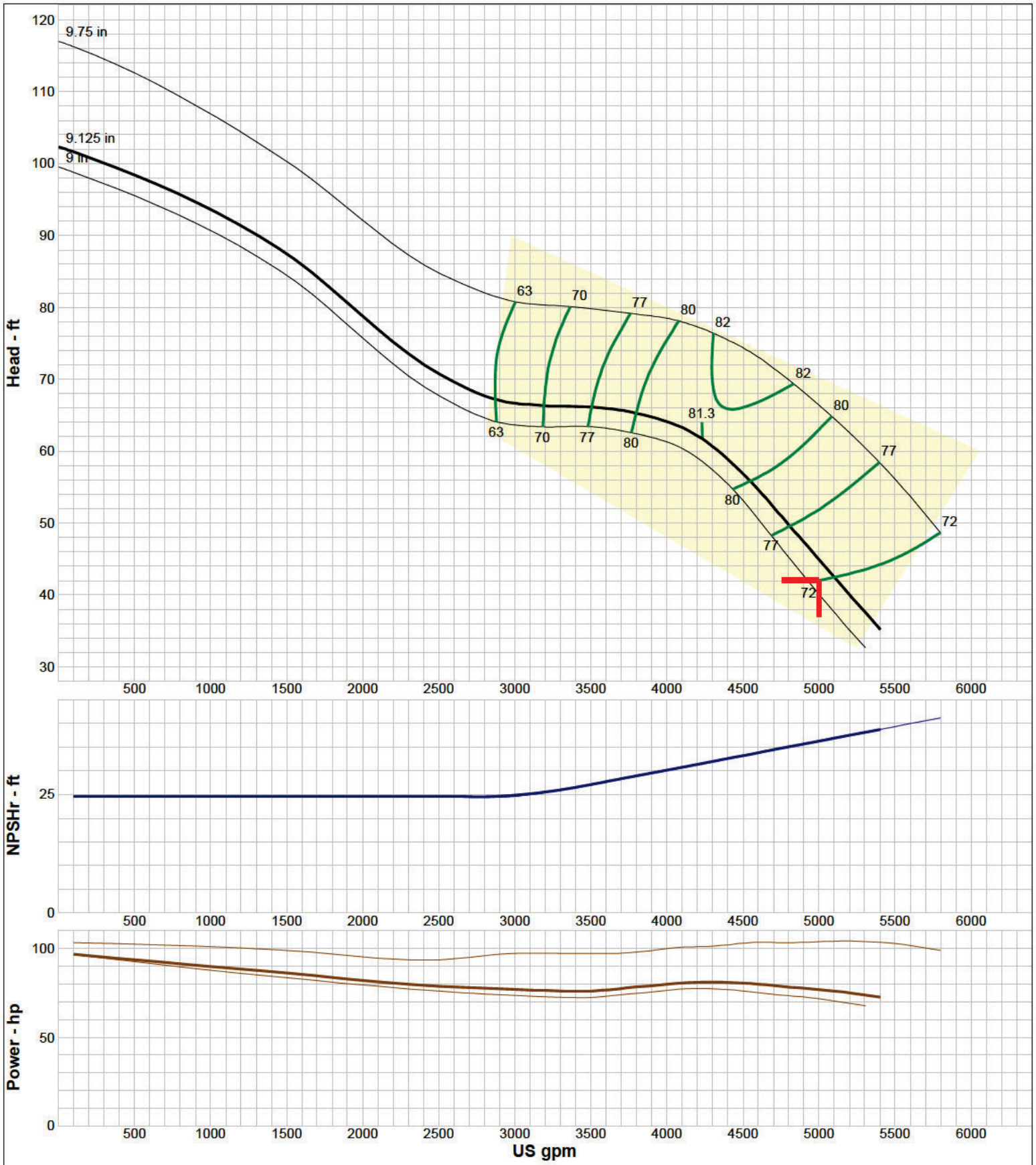

Discharge Sizes-12",14"

[redacted]
1/7/2021

Submersible 60 Hz
Catalog: Goulds Sub 60HZ, Vers 3.21
Submersible - 1800
Design Point: 5000 US gpm, 42 ft

Size: 15FHC
Speed: 1740 rpm
Dia: 9.125 in
Curve: E6415FAPCO

[redacted]

[redacted]

VIS-CFB
1 Stage 12x15FHC

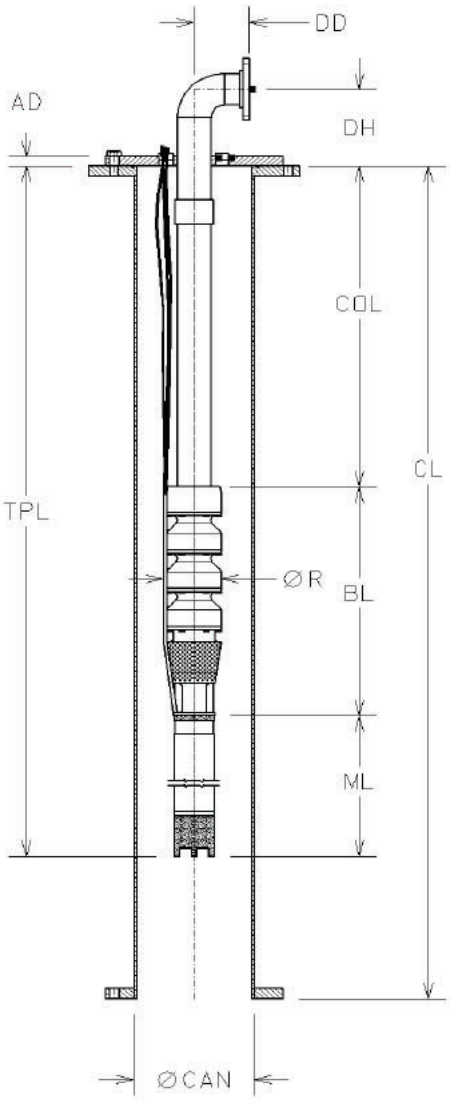

		Pump Data	
AD:	1.62		
AG:		Size:	15FHC
		Stages:	1
BL:	36.63		
CAN:	36		
CD:		BowlShaft:	2.19"
CL:	83.7'		
COL:	67.0'	LineShaft:	N/A
DD:	24.00	LineShaft Type:	N/A
		Column:	Standard
DH:	24.00	Column:	12" Flanged
G:	46.00	Bearing Spacing:	N/A
H:	42.75	Section Length:	10 feet
HH:		Head:	Well Head
J:	1.62	Flange (Disch.):	12"- RF
K:	32	Suct.:	36" 150#
ML:	59.84		
		Seal:	Gaskets
TPL:	75.0'	Strainer:	Cone
UG:	0.00	SubBase:	N/A
V:	1.63		
W:	00.00	Motor Diameter:	10"
Z:	36.00		

Hydraulic Data		**Miscellaneous**		**Motor Data**	
Flow (gpm):	5000	Thrust At Design (lb):	1308	Model:	S20932H
Pump Head (ft):	40.2	Thrust At Shutoff (lb):	3066	Make:	Hitachi
TDH (ft):	42.5	Pumping Level(in):	0	HP:	75
Speed (rpm):	1710			RPM:	1800
Fluid:	Water	**Weight**		Type:	SUB
Temperature (F):	60	Pump (lb):	1630	Efficiency:	86.2
Viscosity:	1.105	Motor (lb):	750	Nominal Dia:	10"
Spec.Grav:	1.002	Total (lb):	2380	Voltage:	460

Version: MAPS Customer: Flint Hills (Indian Hills) Date: 01-07-2021

[redacted]

HYDRAULIC ANALYSIS
VIS-CFB
1 Stage 12x15FHC

Overall Pump Parameters

Size and Model:	15FHC	Pump Operating Speed, RPM:	1740
Capacity, GPM:	5000	Total Dynamic Head, Ft.:	42.5
Total Pump Length, In.:	75.0	Impeller Trim, In.:	9.1
Pump Type:	Canned Sub	Head Type:	Well Head
Pump K-Factor:	30	Number of Stages:	1
		Pumping Level, In.:	0.0

Bowl Data

Total Bowl Length, In.:	36.63	Bowl Diameter, In.:	14.75
Bowl Shaft Dia, In.:	2.19	Bowl Shaft Limit, HP:	838
		Bowl Shaft Material:	416SS

Column Data

Column Diameter, In.:	12	Column Load, Lb.:	538.7
Wall Thickness, In:	0.375	Column Elongation, In.:	0.00
		Shutoff Column Elongation, In.:	0.00

HorsePower Data

		Thrust Load Loss, Hp.:	0.00
Bowl HP At Design, Hp.:	74.3	Motor HorsePower, Hp.:	75

Other Data

Hydraulic Thrust, Lb.:	1277.6	Thrust at Design, Lb.:	1307.6
Thrust at Shutoff, Lb.:	3066	Actual Head above Grade, Ft.:	40.21
Suction Pressure, psi:	0.0	Shutoff Disc Pressure, psi:	43.8
Column Loss, Ft.:	0.00	NPSHa, Ft.:	
Head Loss, Ft.:	2.29	NPSHr, Ft.:	36.30
Total Loss, Ft.:	2.29	NPSH margin, Ft.:	

Efficiency Data (Efficiencies estimated not guaranteed)

Bowl Efficiency:	72.30	Pump Efficiency:	68.40
Motor Efficiency:	86.20	Overall Efficiency:	58.96
		KWH/1000 gallons:	0.23

Component Weights

Bowl Weight, Lbs.:	713	Column Weight,Lbs.:	4550
Head Weight, Lbs.:	265	Can Weight,Lbs.:	11,800
Motor Weight, Lbs.:	750	Total Pump Weight,Lbs.:	18,200

Version: MAPS Customer: Flint Hills (Indian Hills) Date: 01-07-2021

[redacted]

SECTIONAL
VIS-CFB
1 Stage 12x15FHC

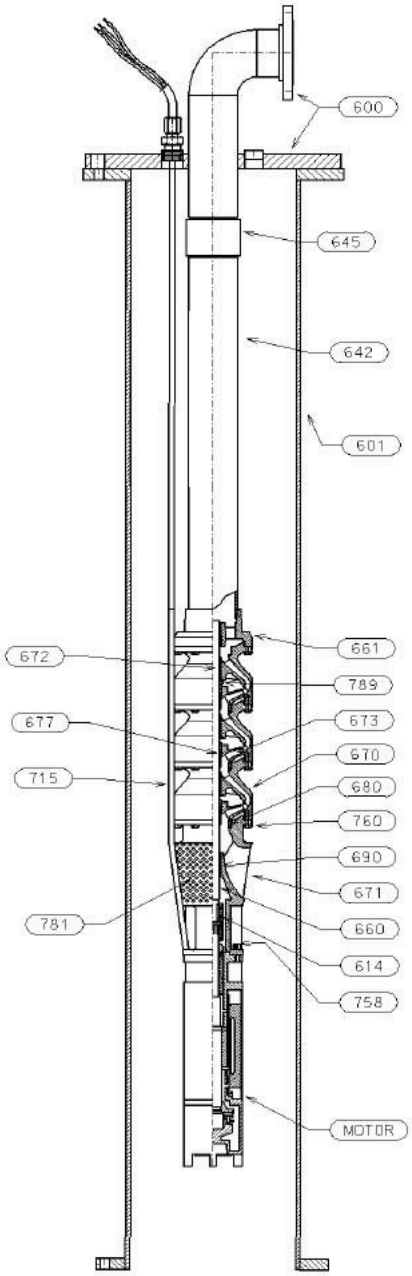

DISCHARGE HEAD ASSEMBLY

ITEM	NAME	Code	MATERIAL	ASTM
600	HEAD- DISCHARGE	9645	CARB0N STEEL FAB	A53

COLUMN AND LINESHAFT ASSEMBLY

601	BARREL	6501	BLACK PIPE SCH 40	A 53-98
642	COLUMN PIPE	6501	BLACK PIPE SCH 40	A 53-98
645	COLUMN COUPLING	6501	BLACK PIPE SCH 40	A 53-98

BOWL ASSEMBLY

614	COUPLING – SUB MOTOR	2218	SST 416	A582M-95b
660	SHAFT- BOWL	2227	SST 416	A582M-95b
661	BOWL- DISCHARGE	8516	TNEMEC 140 ON IRON	A48
670	BOWL- INTERMEDIATE	8516	TNEMEC 140 ON IRON	A48
671	SUBADAPTER	1018	DUCTILE IRON 65-45-12	A536-84(1999)e1
672	BEARING- INT BOWL	1109	FEDERALLOY BISMUTH BRZ	B584-00
673	IMPELLER	1203	SST 316	A744M-00
677	COLLET- IMPELLER	2218	SST 416	A582M-95b
680	WEAR RING- BOWL	1128	BRONZE, AL C95400	B148-97e1
690	BEARING- SUCTION	1109	FEDERALLOY BISMUTH BRZ	B584-00
715	GUARD- CABLE	3215	SST 304	A240M-00
758	CAPSCREW- HEX (MOTOR)	2228	SST 304	A276
760	CAPSCREW- HEX	2229	SST 316	A276-00a
781	SCREEN- SUCTION	3215	SST 304	A240M-00
789	WASHER- UPTHRUST	6266	TIVAR 1000	x

Version: MAPS Customer: Flint Hills (Indian Hills) Date: 01-07-2021