LAKE MEAD NATIONAL RECREATION AREA
Boulder City, Nevada

PMIS No. 312150
Replace Uninterruptable Power Supply Batteries at the
LAKE Interagency Communications Center

Scope of Work

NATIONAL PARK SERVICE
PACIFIC WEST REGION

June 2026

1.1 WORK COVERED BY CONTRACT DOCUMENTS

Project Location:
The project is in Lake Mead National Recreation Area at;
LAKE Interagency Communications Center
101 Katzenbach Drive, Boulder City, Nevada 89005.

A. The Work consists of the following:
Removal and replacement of 80 batteries in two (2) Eaton model 9390, 208-volt, rack mounted uninterrupted power supply systems. Current batteries are CSB HRL 12200W FR 12V 200W/Cell 1.67V/15Min **(Or Equal)**. **See Appendix (below) for pictures**.

B. Dispose/Recycle removed batteries IAW all federal/state/local procedures.

C. Contractor is responsible for supplying all materials, labor, and equipment necessary for the completion of the work.

D. Prior to ordering batteries, the contractor must submit product data sheets for approval by the COR.

1.3 PUBLIC USE OF THE SITE

A. General: The project site will be closed to the public and park staff during servicing.

1.4 CONTRACTOR USE OF SITE

A. **Site Access:** Access to the site is restricted. The contractor will be let in by the COR for each day work is to be performed. The contractor shall furnish a list of personnel with phone contact information.

B. **Park Regulations:** Ensure all personnel (contractors, subcontractors, and vendors) entering or working in the park are familiar with and obey all park regulations. Law enforcement rangers will intervene if they perceive any unsafe or unlawful activity.

C. **Working Hours:** Regular work hours shall be limited to daylight hours from 7:00 a.m. until 5:00 p.m. Monday through Friday, excluding government holidays. Work outside regular hours requires approval from the contracting officer. Contractor must notify Contracting Officer Representative 24 hours prior to commencement of work and provide written notification to all the nearby residences.

D. **No Smoking Policy:** Smoking is prohibited inside or outside within 25 feet of any buildings in the park. This applies to existing buildings, buildings under construction, and buildings under renovation. Discarding of tobacco products or debris anywhere other than into designated tobacco receptacles is considered littering and subject to fines.

E. **Staging and Storage:** Confine storage of equipment and materials to the staging / lay-down / storage areas identified on the attached site map or as established at the pre-work meeting.

F. **Parking:** The contractor shall park vehicles and heavy equipment in designated areas for contractor use or as established at the pre-work meeting. Vehicles are not permitted within long-term or overnight parking along roads or in associated overlooks / pull-outs.

G. **Driveways and Entrances:** The contractor shall keep driveways and entrances serving the premises clear and available to the government, government employees, and emergency vehicles at all times.

H. The Contractor shall submit employee names and photos of their drivers license for background checks.

1. Per the FBI CJIS Security all contract employees shall submit to a verification of identification, including a state of residency, background check prior to such employee accessing physically secured areas.
2. Contract employees shall provide their full name, date of birth and State of License information to the Dispatch Supervisor.
3. A contract employee found to have a criminal record consisting of felony conviction(s) shall be disqualified. Applicants shall also be disqualified on the basis of confirmations that arrest warrants are outstanding for such applicants.
4. Applicants with a record of misdemeanor offense(s) may be granted access if the Agency determines the nature or severity of the misdemeanor offense(s) do not warrant disqualification

1.5 Safety Considerations

A. A permit must be obtained from the park fire coordinator before commencing any hot work activities. This will be made available to the contractor on request.

B. The non-emergency number for dispatch is: (702) 293-8998

C. The emergency number for dispatch is: (702) 293-8932

D. All accidents must be reported to dispatch.

1.5 LIST OF CONTRACT LINE ITEMS

A. Contract Price Item No.1 – LAKE Interagency Communications Center Replace UPS Batteries

1. This line item consists of:
   All necessary labor, materials, and equipment to remove and replace the 80 batteries in two (2) Eaton model 9390, 208 volt, rack mounted uninterrupted power supply systems servicing the facility. Current batteries are CSB HRL 12200W FR 12V 200W/Cell 1.67V/15Min (Or Equal). The work includes, but is not limited to: Verifying existing equipment locations, capacities, and characteristics. Providing adequate maintenance clearance around each equipment per manufacturer's recommendation. Complete operational tests. Start units according to manufacturer's instructions and complete manufacture's startup checklist. All removed/demolished equipment/materials (batteries) shall be transported and legally disposed of off-site. The contractor shall ensure that the project is completed to all industry standards.

2. **Contract Superintendence:** A superintendent needs to have 3 years of experience with direct superintendence similar to this scope of work (SOW). If prime contractor is self-performing the work, then daily direct on-site superintendence is not required. If the prime contractor is subcontracting the work out, the prime must have a superintendent physically available to be on-site while work is being performed. The contractor shall submit a letter to the Contracting Officer (CO) and Contracting Officers Representative (COR) on quoter's experience that is related to the SOW.

3. No separate measurement will be made.

4. Payment will be made at the contract lump sum price.

APPENDIX

LAKE MEAD NATIONAL RECREATION AREA

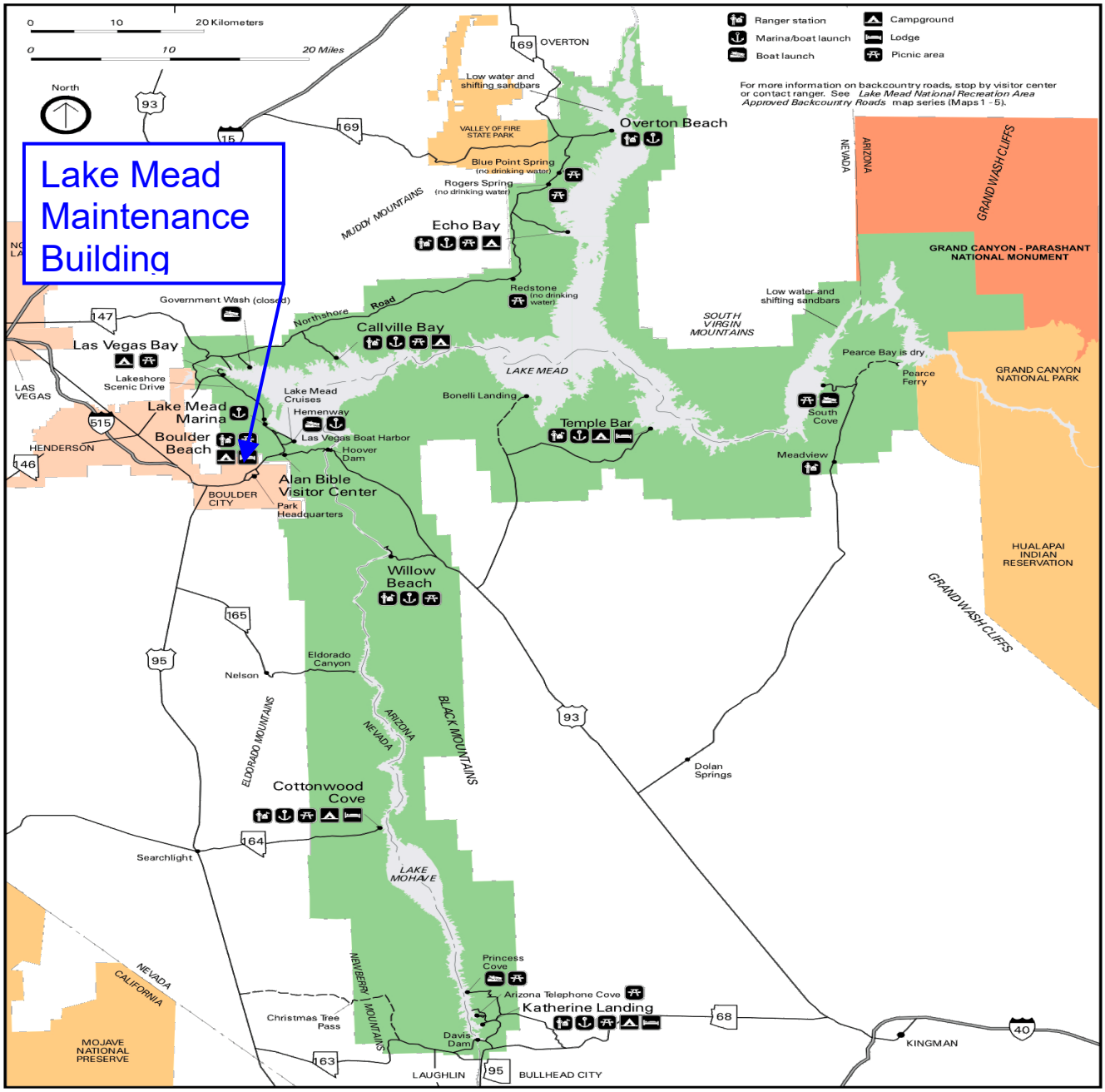

FIGURE 1

LAKE MEAD NRA DISTANCE CHART

Distances in Miles	Alan Bible Visitor Ctr	Hemenway Harbor	Boulder Beach	Lake Mead Marina	Las Vegas Bay	Callville Bay	Echo Bay	Overton Beach	Hoover Dam Visitor Ctr	Willow Beach	Temple Bar	South Cove	Cottonwood Cove	Katherine Landing
Alan Bible Visitor Ctr	0	2.2	2	3.2	9	26	51	59	3	22	49	92	57	87
Hemenway Harbor	2.2	0	1	2.2	8	25	50	58	4	23	50	93	58	88
Boulder Beach	2	1	0	1.2	7	24	49	57	5	24	51	94	59	89
Lake Mead Marina	3.2	2.2	1.2	0	6	23	48	56	6	25	52	95	60	90
Las Vegas Bay	9	8	7	6	0	17	42	50	12	31	58	101	66	96
Callville Bay	26	25	24	23	17	0	33	41	29	48	75	118	83	113
Echo Bay	51	50	49	48	42	33	0	18	62	73	100	143	108	138
Overton Beach	59	58	57	56	50	41	18	0	70	81	108	151	116	146
Hoover Dam	3	4	5	6	12	29	62	70	0	19	46	89	60	99
Willow Beach	22	23	24	25	31	48	73	81	19	0	35	78	79	88
Temple Bar	49	50	51	52	58	75	100	108	46	35	0	97	155	107
South Cove	92	93	94	95	101	118	143	151	89	78	97	0	154	106
Cottonwood Cove	57	58	59	60	66	83	108	116	60	79	155	154	0	58
Katherine Landing	87	88	89	90	96	113	138	146	99	88	107	106	58	0

Table of approximate land-travel distances between major destinations at Lake Mead NRA

FIGURE 2

Eaton 9390 UPS Systems

Interior of Battery Cabinet - Batteries

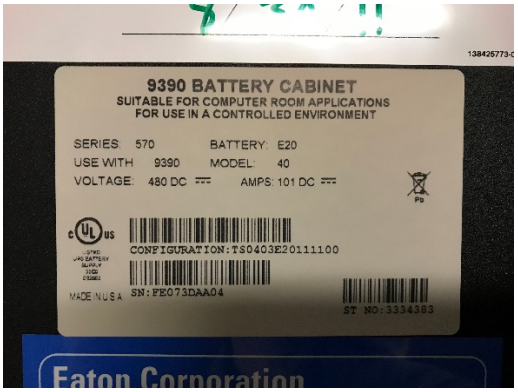

Battery Cabinet Tag

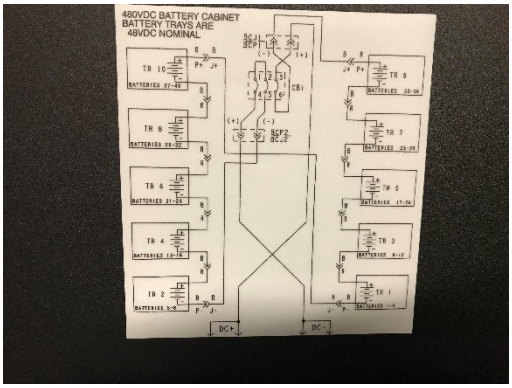

Close-up of Battery

CM-16 TRANSMITTAL FORM - NATIONAL PARK SERVICE

Park:	PMIS No.:	Project:	Contract No.:	Date:	Transmittal No.: Sheet: 1 of:

Contractor:	Subcontractor / Supplier:

Action Submittal	Informational Submittal	Item No.	Specification Section No.	Paragraph No.	Description of Item (Size, Type, Name, Manufacturer, Use, Etc.)	No. of Copies Submitted	Contributes to meeting LEED and/or Fed Sust. Req.	Meets Buy American Act Req.	Alternate Materials Proposed	NPS ACTION: Action Submittal: No. of Copies Returned	Approved	Approved with Notations	Disapproved - Resubmit	NPS ACTION: Informational Submittal: Accept	Reject

Contractor's Signature:			Recommended by:
Title:	Date:	I hereby certify that this submittal has been reviewed for accuracy, completeness, and compliance with contract requirements (FAR 52.236-21)	Title: Date:
Review Comments:			Action by:
			Title: Date:
			Approval of this submittal is subject to the provisions of the contract drawings and specifications. This action is for general concurrence only and the government is not responsible for errors or omissions
Date Received:	Distribution: 1 copy each: CMR Interim, A/E, DSC, Contr.		Date To Contractor: r03/10

CM-16 TRANSMITTAL FORM CONTINUATION - NATIONAL PARK SERVICE

Park:	PMIS No.:	Project:	Contract No.:	Date:	Transmittal No.: Sheet: of:

Contractor:	Subcontractor / Supplier:

										NPS ACTION					
										Action Submittal				Informational Submittal	
Action Submittal	Informational Submittal	Item No.	Specification Section No.	Paragraph No.	Description of Item (Size, Type, Name, Manufacturer, Use, Etc.)	No. of Copies Submitted	Contributes to meeting LEED and/or Fed Sust. Req.	Meets Buy American Act Req.	Alternate Materials Proposed	No. of Copies Returned	Approved	Approved with Notations	Disapproved - Resubmit	Accept	Reject

Review Comments

r03/10

REQUEST FOR INFORMATION

Project:

Contract No.: **Date:**

To:

cc:

From:

Subject:

Please provide the following information or clarification:

Response required by ___________

Date:

To:

From:

Subject: