NAVAL STATION NEWPORT

NEWPORT, RHODE ISLAND

DECENTRALIZE STEAM AT BOILER PLANT A6

ePROJECTS NO. 1389839

ARCHITECT: AMES & WHITAKER, ARCHITECTS

MECHANICAL & ELECTRICAL ENGINEER: KUEGLER ASSOCIATES
CIVIL ENGINEER: DIVERSIFIED TECHNOLOGY CONSULTANTS
ENVIRONMENTAL ENGINEER: ENVIROMED INC.
STRUCTURAL ENGINEER: JOHN SMOLEN & ASSOCIATES

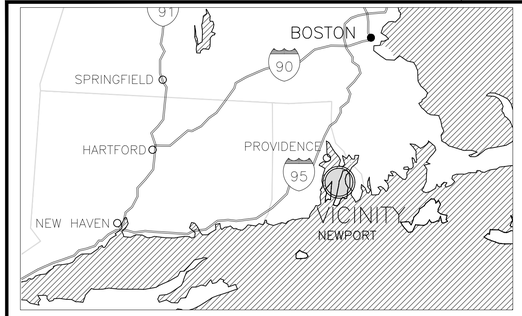

AREA MAP

NORTH ARROW

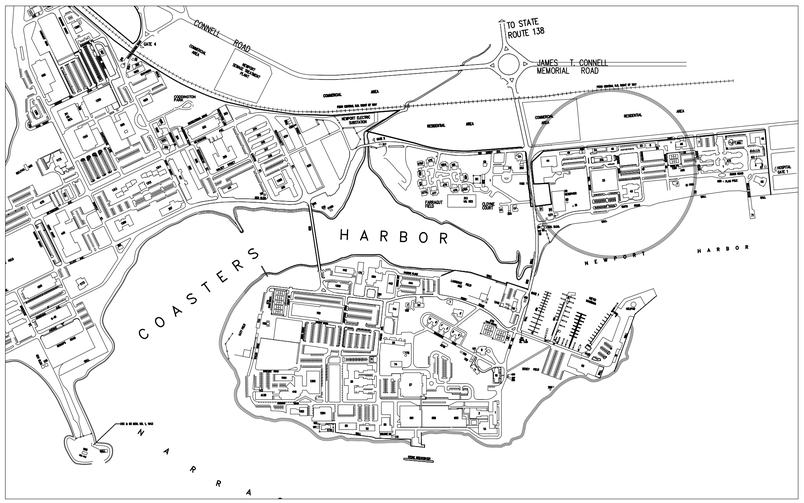

VICINITY MAP

NORTH ARROW

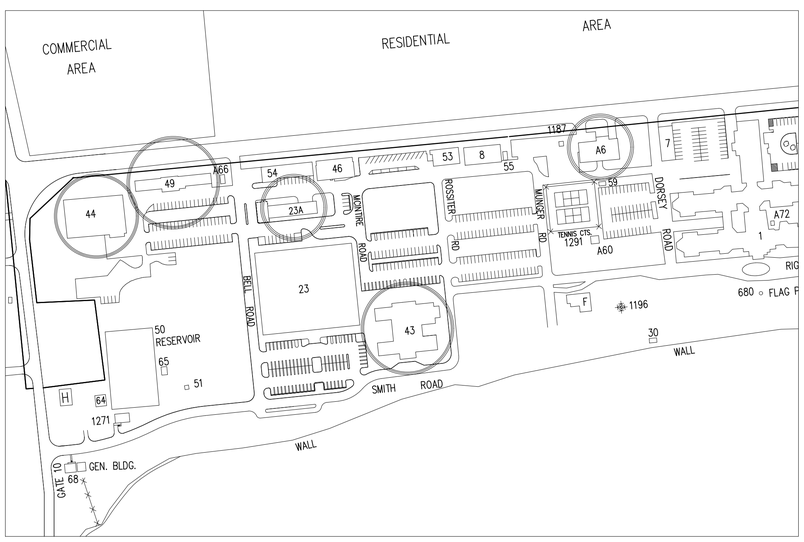

LOCATION MAP

NORTH ARROW

LIST OF DRAWINGS:

NAVFAC DWG.NO.	NAVSTA DWG.NO.	DWG.NO	SHEET	TITLE
12799431	44490-412	G-100	1 OF 65	COVER SHEET
12799432	44491-412	HM100	2 OF 65	MECHANICAL ROOMS ABATEMENT PLAN
~~12799433~~	~~44492-412~~	~~HM101~~	~~3 OF 65~~	~~STEAM TRENCH ABATEMENT~~
~~12799434~~	~~44493-412~~	~~HM102~~	~~4 OF 65~~	~~BUILDING A6 LEAD ABATEMENT PLAN~~
~~12799435~~	~~44494-412~~	~~HM103~~	~~5 OF 65~~	~~BUILDING A6 ASBESTOS ABATEMENT PLAN~~
12799436	44495-412	C-100	6 OF 65	GENERAL NOTES, LEGEND & ABBREVIATIONS
12799437	44496-412	C-101	7 OF 65	OVERALL EXISTING CONDITIONS
12799438	44497-412	C-102	8 OF 65	EXISTING CONDITIONS
12799439	44498-412	C-103	9 OF 65	EXISTING CONDITIONS
12799440	44499-412	C-104	10 OF 65	EXISTING CONDITIONS
~~12799441~~	~~44500-412~~	~~C-105~~	~~11 OF 65~~	~~DEMOLITION LAYOUT~~
~~12799442~~	~~44501-412~~	~~C-106~~	~~12 OF 65~~	~~DEMOLITION LAYOUT~~
~~12799443~~	~~44502-412~~	~~C-107~~	~~13 OF 65~~	~~DEMOLITION LAYOUT~~
~~12799444~~	~~44503-412~~	~~C-108~~	~~14 OF 65~~	~~SITE LAYOUT~~
12799445	44504-412	C-109	15 OF 65	SITE LAYOUT
12799446	44505-412	C-110	16 OF 65	SITE LAYOUT
12799447	44506-412	C-501	17 OF 65	SITE DETAILS
12799448	44507-412	C-502	18 OF 65	SITE DETAILS
12799449	44508-412	C-503	19 OF 65	SITE DETAILS
12799450	44509-412	S-101	20 OF 65	PLANS, SECTIONS & DETAILS
12799451	44510-412	S-102	21 OF 65	SECTIONS & DETAILS AND GENERAL NOTES
12799452	44511-412	P001	22 OF 65	PLUMBING NOTES & SYMBOLS
12799453	44512-412	PD100	23 OF 65	B23A PLUMBING DEMOLITION PLAN
12799454	44513-412	P100	24 OF 65	B23A PLUMBING PLAN
12799455	44514-412	P600	25 OF 65	PLUMBING PIPING DIAGRAMS
12799456	44515-412	M001	26 OF 65	MECHANICAL NOTES & SYMBOLS
12799457	44516-412	M002	27 OF 65	MECHANICAL NOTES & SYMBOLS
12799458	44517-412	MD100	28 OF 65	B23A MECHANICAL DEMOLITION PLAN
12799459	44518-412	MD101	29 OF 65	B43 MECHANICAL DEMOLITION PLAN
12799460	44519-412	MD102	30 OF 65	B44 MECHANICAL DEMOLITION PLAN
12799461	44520-412	MD103	31 OF 65	B49 MECHANICAL DEMOLITION PLAN
~~12799462~~	~~44521-412~~	~~MD104~~	~~32 OF 65~~	~~A6 MECHANICAL DEMOLITION PLAN~~
~~12799463~~	~~44522-412~~	~~MD105~~	~~33 OF 65~~	~~A6 MECHANICAL DEMOLITION SECTION~~
~~12799464~~	~~44523-412~~	~~MD106~~	~~34 OF 65~~	~~A6 MECHANICAL DEMOLITION SECTION~~
~~12799465~~	~~44524-412~~	~~MD107~~	~~35 OF 65~~	~~A6 MECHANICAL DEMOLITION SECTION~~
~~12799466~~	~~44525-412~~	~~MD108~~	~~36 OF 65~~	~~A6 ELECTRICAL DEMOLITION SECTION~~
12799467	44526-412	MD600	37 OF 65	MECHANICAL DEMO PIPING DIAGRAMS
12799468	44527-412	MD601	38 OF 65	MECHANICAL DEMO PIPING DIAGRAMS
12799469	44528-412	MD602	39 OF 65	MECHANICAL DEMO PIPING DIAGRAMS
12799470	44529-412	MD603	40 OF 65	MECHANICAL DEMO PIPING DIAGRAMS
12799471	44530-412	M100	41 OF 65	B23A MECHANICAL PLAN
12799472	44531-412	M101	42 OF 65	B23A MECHANICAL PLAN
12799473	44532-412	M102	43 OF 65	B43 MECHANICAL PLAN
12799474	44533-412	M103	44 OF 65	B44 MECHANICAL PLAN
12799475	44534-412	M104	45 OF 65	B49 MECHANICAL PLAN
12799476	44535-412	M105	46 OF 65	A6 MECHANICAL PLAN
12799477	44536-412	M500	47 OF 65	MECHANICAL DETAILS
12799478	44537-412	M501	48 OF 65	MECHANICAL DETAILS
12799479	44538-412	M600	49 OF 65	MECHANICAL PIPING DIAGRAMS
12799480	44539-412	M601	50 OF 65	MECHANICAL PIPIING DIAGRAMS
12799481	44540-412	M602	51 OF 65	MECHANICAL PIPING DIAGRAMS
12799482	44541-412	M603	52 OF 65	MECHANICAL CONTROL DIAGRAMS
12799483	44542-412	M604	53 OF 65	MECHANICAL CONTROL DIAGRAMS
12799484	44543-412	M605	54 OF 65	MECHANICAL CONTROL DIAGRAMS
12799485	44544-412	M606	55 OF 65	MECHANICAL CONTROL DIAGRAMS
12799486	44545-412	M607	56 OF 65	MECHANICAL CONTROL DIAGRAMS
12799487	44546-412	M608	57 OF 65	MECHANICAL SCHEDULES
12799488	44547-412	M609	58 OF 65	MECHANICAL SCHEDULES
12799489	44548-412	E001	59 OF 65	ELECTRICAL NOTES
12799490	44549-412	E002	60 OF 65	ELECTRICAL SYMBOLS & ABBREVIATIONS
12799491	44550-412	E100	61 OF 65	B23A ELECTRICAL PLAN
12799492	44551-412	E101	62 OF 65	B43 ELECTRICAL PLAN
12799493	44552-412	E102	63 OF 65	B44 ELECTRICAL PLAN
12799494	44553-412	E103	64 OF 65	B49 ELECTRICAL PLAN
12799495	44554-412	E104	65 OF 65	A6 ELECTRICAL PLAN

SYM	DESCRIPTION	DATE	APPR
1	REVISION	6-25-2026	

NAVFAC

SEAL

AMES & WHITAKER Architects
BOSTON OF THE AMERICAN INSTITUTE OF ARCHITECTS
8 Liberty Street Washington, Massachusetts 02108 (508) 432-0041 Fax (508) 432-4097

A/E INFO

APPROVED

FOR COMMANDER NAVFAC

ACTIVITY

BID SET SUBMISSION

SATISFACTORY TO DATE 12/30/19

DES	RS	DRW	CA	CHK	RWS

<<PM/DM>>	RC
BRANCH MANAGER	XX
CHIEF ENG/ARCH	XXX
<<XXX>>	XX

DEPARTMENT OF THE NAVY
NAVAL FACILITIES ENGINEERING COMMAND
NORTHEAST PT.
NAVAL FACILITIES ENGINEERING COMMAND ~ MID-ATLANTIC
NAVAL STATION - NORFOLK, VIRGINIA
NAVAL STATION NEWPORT
NEWPORT, RI
DECENTRALIZE STEAM AT BOILER PLANT A6
COVER SHEET

SCALE: AS NOTED
EPROJECT NO.: 1389839
CONSTR. CONTR. NO.
NAVFAC DRAWING NO. 12799431
SHEET 1 OF 65
G-100

NAVSTA DRAWING NO. 44490-412

DRAWFORM REVISION: 10 MARCH 2009

ROOF ABOVE MECHANICAL ROOM HAS ASBESTOS–CONTAINING ROOFING CEMENT. CUT NEW OPENINGS IN ROOF FOR MECHANICAL EQUIPMENT IN COMPLIANCE WITH SECTION 028200. COORDINATE WITH DRAWINGS P100 AND M101.

NO ASBESTOS–CONTAINING MATERIALS PRESENT IN THE HATCHED AREA. NO ASBESTOS ABATEMENT SCHEDULED FOR THIS AREA IN SUPPORT OF THIS PROJECT.

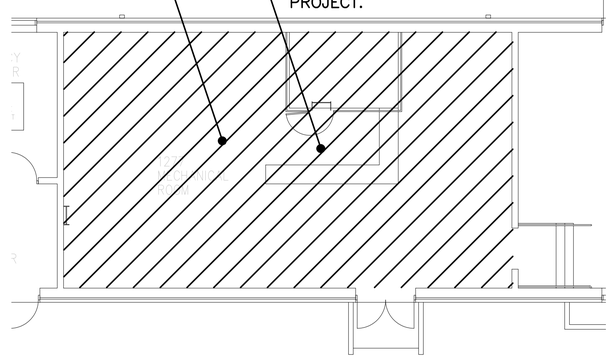

1 HM100 BUILDING 23A – ABATEMENT

SCALE: 1/8" = 1'–0" 0 4' 8' 16'

N

Missing or invalid reference
File: /Users/J5E0L/Desktop/WORK FILES/Newport Decentralize Steam/Decentralize Steam A6 Pre–Final Submittal/B23A KEY PLAN.pdf
Sheet: 1

ON DRAWING M102, MAN ACCESS HATCH IS BEING CUT THROUGH WALLBOARD CHASE ON FIRST FLOOR ABOVE. WALLBOARD & JOINT COMPOUND ARE NON–ASBESTOS IN BUILDING 43.

NO ASBESTOS–CONTAINING MATERIALS PRESENT IN THIS HATCHED AREA. NO ASBESTOS ABATEMENT SCHEDULED FOR THIS AREA IN SUPPORT OF THIS PROJECT.

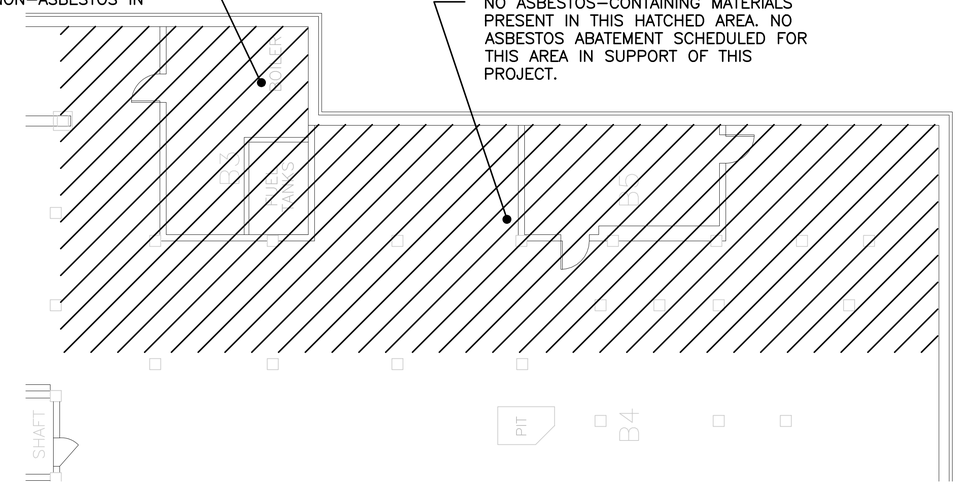

2 HM100 BUILDING 43 – ABATEMENT

SCALE: 1/8" = 1'–0" 0 4' 8' 16'

N

Missing or invalid reference
File: /Users/J5E0L/Desktop/WORK FILES/Newport Decentralize Steam/Decentralize Steam A6 Pre–Final Submittal/B43 key plan.pdf
Sheet: 1

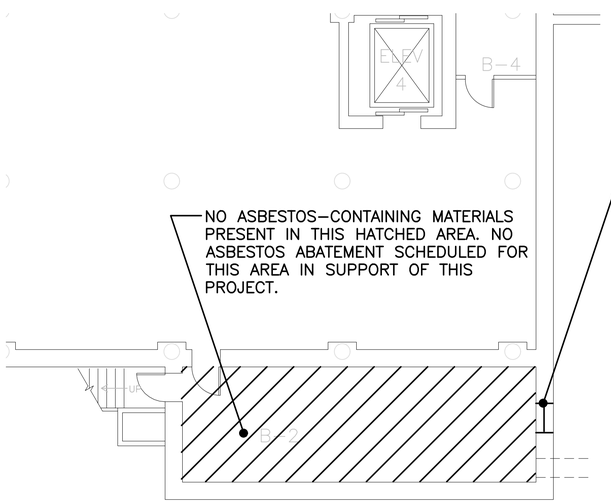

NO ASBESTOS–CONTAINING MATERIALS PRESENT IN THIS HATCHED AREA. NO ASBESTOS ABATEMENT SCHEDULED FOR THIS AREA IN SUPPORT OF THIS PROJECT.

THIS BLOCKED WINDOW IS PAINTED WITH LEAD–BASED PAINT AND HAS ASBESTOS–CONTAINING CAULK. DO NOT DISTURB WINDOW DURING RENOVATIONS.

3 HM100 BUILDING 44 – ABATEMENT

SCALE: 1/8" = 1'–0" 0 4' 8' 16'

N

Missing or invalid reference
File: /Users/J5E0L/Desktop/WORK FILES/Newport Decentralize Steam/Decentralize Steam A6 Pre–Final Submittal/B44 key plan.pdf
Sheet: 1

FLOOR PAINT ON CONCRETE FLOOR AND STEEL FLOOR TRENCH COVERS IS LEAD–BASED. DISPOSE OF REMOVED TRENCH COVERS AS SCRAP METAL.

NO ASBESTOS–CONTAINING MATERIALS PRESENT IN THIS HATCHED AREA. NO ASBESTOS ABATEMENT SCHEDULED FOR THIS AREA IN SUPPORT OF THIS PROJECT.

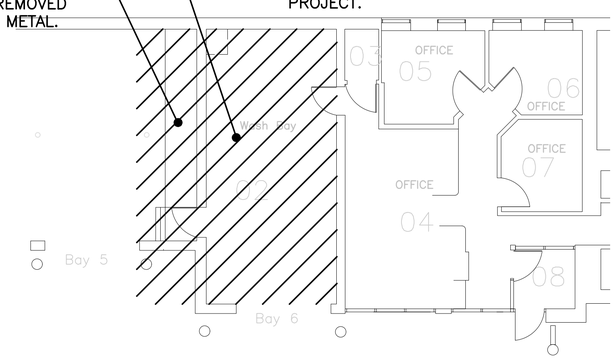

4 HM100 BUILDING 49 – ABATEMENT

SCALE: 1/8" = 1'–0" 0 4' 8' 16'

N

Missing or invalid reference
File: /Users/J5E0L/Desktop/WORK FILES/Newport Decentralize Steam/Decentralize Steam A6 Pre–Final Submittal/B49 key plan.pdf
Sheet: 1

SYM	DESCRIPTION	DATE	APPR.

NAVFAC

SEAL

AMES & WHITAKER Architects

A/E INFO

APPROVED

FOR COMMANDER NAVFAC ATLANTIC

BID SET SUBMISSION

SATISFACTORY TO DATE 12/30/19

DES	JL	DRW	JL	CHK	JL
<<PM/DM>>				RC	
BRANCH MANAGER				XX	
CHIEF ENG/ARCH				XXX	
<<XXX>>				XX	

DEPARTMENT OF THE NAVY
NAVAL FACILITIES ENGINEERING COMMAND
NORTHEAST IPT

NAVAL FACILITIES ENGINEERING COMMAND ~ MID-ATLANTIC
NAVAL STATION – NORFOLK, VIRGINIA

NAVAL STATION NEWPORT
NEWPORT, RI

DECENTRALIZE STEAM AT BOILER PLANT A6

MECHANICAL ROOMS ABATEMENT PLAN

SCALE: AS NOTED

EPROJECT NO.: 1389839

CONSTR. CONTR. NO.

NAVFAC DRAWING NO. 12799432

SHEET 2 OF 65

HM100

NAVSTA DRAWING NO. 44491–412

DRAWFORM REVISION: 10 MARCH 2009

GENERAL NOTES

1. THE LOCATION OF EXISTING UTILITIES AS DEPICTED ARE FROM MAPS OF UTILITY COMPANIES, FIELD SURVEYS, AND AVAILABLE INFORMATION. THEY MUST BE CONSIDERED AS ONLY APPROXIMATE BOTH AS TO SIZE AND LOCATION, AND ARE PROVIDED FOR INFORMATIONAL PURPOSES ONLY. THE INFORMATION IS NOT TO BE RELIED UPON AS BEING EXACT OR COMPLETE. NEITHER THE OWNER NOR THE ENGINEER ASSUMES RESPONSIBILITY THAT THE OBSTRUCTIONS INDICATED WILL BE THE OBSTRUCTIONS ENCOUNTERED. THE SITE CONTRACTOR IS SOLELY RESPONSIBLE FOR DETERMINING ACTUAL FIELD LOCATIONS. LOCATIONS AND DEPTHS OF CRITICAL UTILITIES SHALL BE VERIFIED BY THE SITE CONTRACTOR IN THE FIELD BY TEST PITS.
2. THE CONTRACTOR MUST CALL "DIGSAFE" (811) AT LEAST 15 DAYS PRIOR TO COMMENCING CONSTRUCTION ACTIVITIES.
3. IT SHALL BE THE CONTRACTOR'S RESPONSIBILITY TO NOTIFY THE CONTRACTING OFFICER OF ANY DIFFERENCES IN LOCATIONS OF EXISTING UTILITIES, OR ANY CONFLICTS WITH THE DESIGN BEFORE CONTINUING WITH THE ASSOCIATED WORK.
4. CONSTRUCTION INDICATED HEREON SHALL BE PERFORMED IN ACCORDANCE WITH APPLICABLE REQUIREMENTS, BUILDING CODES, AND STANDARDS.
5. ALL DIMENSIONS AND ELEVATIONS MUST BE FIELD VERIFIED BY THE SITE CONTRACTOR.
6. EXISTING FEATURES ARE DRAWN AS SCREENED LINES AND NEW CONSTRUCTION FEATURES ARE SHOWN AS DARK LINES.
7. CONTRACTOR SHALL PROTECT AND MAINTAIN ANY CONTROL POINTS, BENCHMARKS, IRON PIPES, OR PROPERTY MARKERS IN THE CONSTRUCTION LIMITS.
8. SOIL EROSION AND SEDIMENT CONTROL MEASURES SHALL CONFORM TO THE MOST RECENT EDITION OF THE RHODE ISLAND SOIL EROSION AND SEDIMENT CONTROL HANDBOOK.
9. DIMENSIONS SHOWN ARE TO FACE OF CURB AND WALLS AND TO CENTERLINES OF PAVEMENT MARKINGS AND LIGHT POLES UNLESS OTHERWISE NOTED ON THESE PLANS.
10. THE SITE CONTRACTOR SHALL BECOME THOROUGHLY FAMILIAR WITH THE PROJECT DOCUMENTS OF ALL TRADES. THE CONTRACTOR SHALL REFER TO THE PROJECT DOCUMENTS OF ALL TRADES FOR UTILITY CONNECTION POINTS AND SHALL COORDINATE THE EXACT LOCATION OF SITE PIPING AND SITE WORK WITH ALL TRADES.
11. AREAS BEYOND THE WORK LIMITS DISTURBED FOR ANY REASON, BY THE CONTRACTOR AND HIS EMPLOYEES, SHALL BE RESTORED TO THE SATISFACTION OF THE CONTRACTING OFFICER AT THE CONTRACTOR'S EXPENSE.
12. CONTRACTOR SHALL ADJUST ALL CATCH BASINS, MANHOLES, VALVES, AND OTHER UTILITY STRUCTURES TO REMAIN TO MATCH FINAL FINISH GRADE.
13. ALL EXISTING UTILITIES MUST BE IDENTIFIED BY A THIRD PARTY INDEPENDENT PRIVATE LOCATING COMPANY PRIOR TO ANY EXCAVATION. UTILITIES SHALL BE LOCATED USING GPR (GROUND PENETRATING RADAR, XRAY, BORE SCOPE OR ULTRASOUND.)
14. CONTRACTOR SHALL FOLLOW NAVAL STATION NEWPORT SOIL MANAGEMENT PLAN THROUGHOUT CONSTRUCTION.
15. CONTRACTOR RESPONSIBLE FOR PHASING OF PROJECT TO ALLOW FOR ACCESS TO ALL BUILDINGS AT ALL TIMES AND SAFE MOVEMENT OF PEDESTRIANS SURROUNDING CONSTRUCTION.
16. ANY WORK THAT REQUIRES ROAD CLOSURES REQUIRES COORDINATION WITH FACILITY.

LEGEND

	EXISTING	NEW CONSTRUCTION
SANITARY SEWER		
WATER MAIN		
OVERHEAD WIRES		
UTILITY POLE		
WATER GATE	WG	
GAS GATE	GG	
DRAINAGE MANHOLE	D	
SANITARY MANHOLE	S	
ELECTRICAL MANHOLE	E	
TELEPHONE MANHOLE	T	
INDEX CONTOUR	200	200
INTERMEDIATE CONTOUR	202	201
CONCRETE SURFACE		
SPOT GRADES	234x0	82.2
GUY WIRE		
LAMP POST		
HYDRANT		
CATCH BASIN		
CURBLESS CATCH BASIN		
MOTION DETECTOR		
SAWCUT LINE		
STORM DRAIN PIPE		
DEMOLITION SYMBOL		
KEYNOTES		# OR 4
EDGE OF PAVEMENT		EP
FENCE		
AGGREGATE SURFACE		
RIP RAP		
TURF SURFACE		
BITUMINOUS PAVEMENT		
SHRUB		
INLET PROTECTION		

ABBREVIATIONS

@	AT
AB	ABANDONED
AP	ANGLE POINT
BLDG	BUILDING
BOT	BOTTOM
BW	BOTTOM OF WALL
CB	CATCH BASIN
CIP	CAST IRON PIPE
CMU	CONCRETE MASONRY UNIT
CO	CLEAN OUT
CONC	CONCRETE
CPP	CORRUGATED PLASTIC PIPE
DIA	DIAMETER
DIP	DUCTILE IRON PIPE
DWG	DRAWING
E	UNDERGROUND ELECTRICAL CONDUIT
ELEC	ELECTRICAL
ELEV	ELEVATION
EP	EDGE OF PAVEMENT
ESS	ELECTRONIC SECURITY SYSTEM
EX	EXISTING
FA	FIRE ALARM
FC	FACE OF CURB
FD	FOUNDATION DRAIN
FFE	FINISHED FLOOR ELEVATION
FG	FINISHED GRADE
FP	FIRE PROTECTION SERVICE
FT	FEET
GR	GRATE
GTD	GRADE TO DRAIN
HC	HANDICAP
HDPE	HIGH-DENSITY POLYETHYLENE PIPE
HH	HAND HOLE
HP	HIGH POINT
IDS	INTRUSION DETECTION SYSTEM
INV	INVERT
L	LENGTH
LF	LINEAR FEET
LP	LIGHT POLE
MAX	MAXIMUM
MH	MANHOLE
MIN	MINIMUM
NTS	NOT TO SCALE
OC	ON CENTER
OD	OUTSIDE DIAMETER
OVH	OVERHEAD ELECTRICAL LINE
PC	POINT OF CURVATURE
PL	PROPERTY LINE
PT	POINT OF TANGENCY
PVC	POLYVINYL CHLORIDE PIPE
R	RADIUS
RCP	REINFORCED CONCRETE PIPE
RD	ROOF DRAIN
S	SLOPE
SB	SUBGRADE
SCH	SCHEDULE
SD	STORM DRAIN
SF	SQUARE FEET
SS	SANITARY SEWER
STD	STANDARD
SWL	SINGLE WHITE LINE
T	TELECOMMUNICATION CONDUIT
TBR	TO BE REMOVED
TEL	TELEPHONE
TF	TOP OF FRAME
TW	TOP OF WALL
TYP	TYPICAL
UD	UNDERDRAIN
UP	UTILITY POLE
W	WATER PIPE
W/	WITH
Δ	DELTA

SYM	DESCRIPTION	DATE	APPR

NAVFAC

SEAL

AMES & WHITAKER Architects
BOARDS OF THE AMERICAN INSTITUTE OF ARCHITECTS
8 Liberty Road Bellingham, Massachusetts 02019 (508) 883-8844 Fax (508) 883-4007

A/E INFO

APPROVED

FOR COMMANDER NAVFAC

ACTIVITY

BID SET SUBMISSION

SATISFACTORY TO	DATE 12/30/19		
DES EPZ	DRW EPZ	CHK ME	
<<PM/DM>>	RC		
BRANCH MANAGER	XX		
CHIEF ENG/ARCH	XXX		
<<XXX>>	XX		

DEPARTMENT OF THE NAVY
NAVAL FACILITIES ENGINEERING COMMAND ~ MID-ATLANTIC
NORTHEAST IPT
NAVAL FACILITIES ENGINEERING COMMAND
NAVAL STATION ~ NORFOLK, VIRGINIA
NAVAL STATION NEWPORT
NEWPORT, RI
DECENTRALIZE STEAM AT BOILER PLANT A6
GENERAL NOTES, LEGEND & ABBREVIATIONS

SCALE: AS NOTED
EPROJECT NO.: 1389839
CONSTR. CONTR. NO.
NAVFAC DRAWING NO. 12799436
SHEET 6 OF 65

NAVSTA DRAWING NO. 44495-412

C-100

DRAWFORM REVISION: 10 MARCH 2009

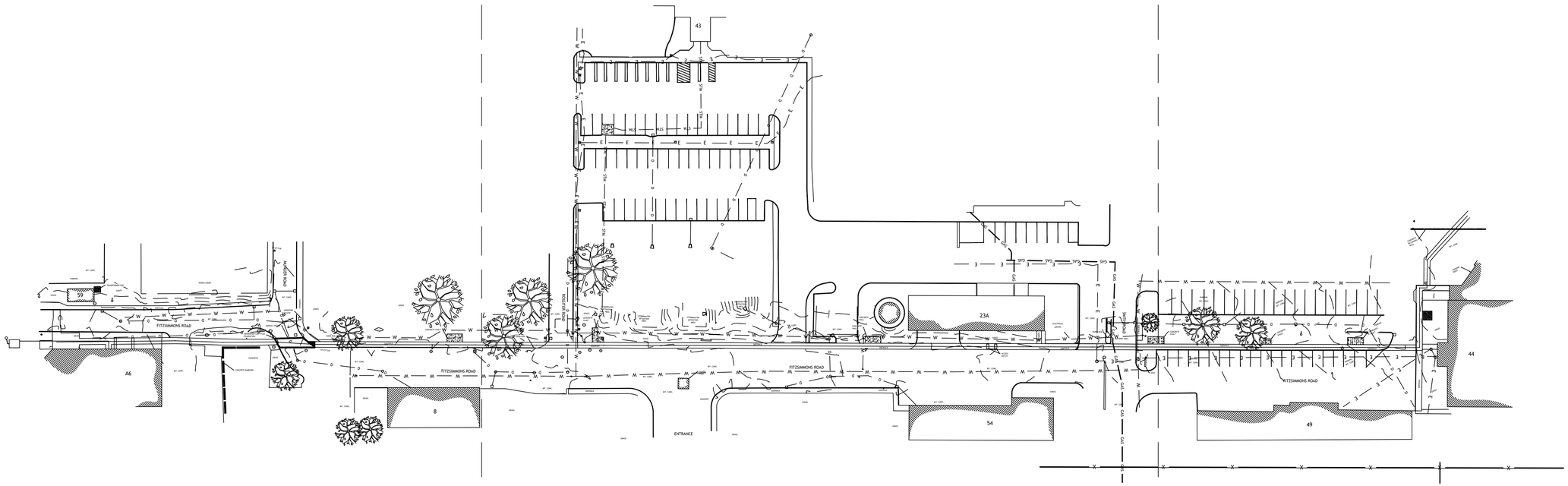

GRAPHIC SCALE

50 0 25 50 100

(IN FEET)

NO WORK ON THIS SHEET

NAVSTA DRAWING NO.
44496-412

SYM	DESCRIPTION	DATE	APPR

NAVFAC

SEAL

AMES & WHITAKER Architects
MEMBERS OF THE AMERICAN INSTITUTES OF ARCHITECTS
9 Liberty Street Bellingham, Massachusetts 02019 (508) 633-0044 Fax (508) 633-0047

A/E INFO

APPROVED

FOR COMMANDER NAVFAC

ACTIVITY

BID SET SUBMISSION

SATISFACTORY TO DATE 12/30/19

DES	EPZ	DRW	EPZ	CHK	ME
<<PM/DM>>			RC		
BRANCH MANAGER			XX		
CHIEF ENG/ARCH			XXX		
<<XXX>>			XX		

DEPARTMENT OF THE NAVY
NAVAL FACILITIES ENGINEERING COMMAND
NORTHEAST PT

NAVAL FACILITIES ENGINEERING COMMAND ~ MID-ATLANTIC
NAVAL STATION ~ NORFOLK, VIRGINIA

NAVAL STATION NEWPORT
NEWPORT, RI

DECENTRALIZE STEAM AT BOILER PLANT A6

OVERALL EXISTING CONDITIONS

SCALE: AS NOTED

EPROJECT NO.: 1389839

CONSTR. CONTR. NO.

NAVFAC DRAWING NO.
12799437

SHEET 7 OF 65

C-101

DRAWFORM REVISION: 10 MARCH 2009

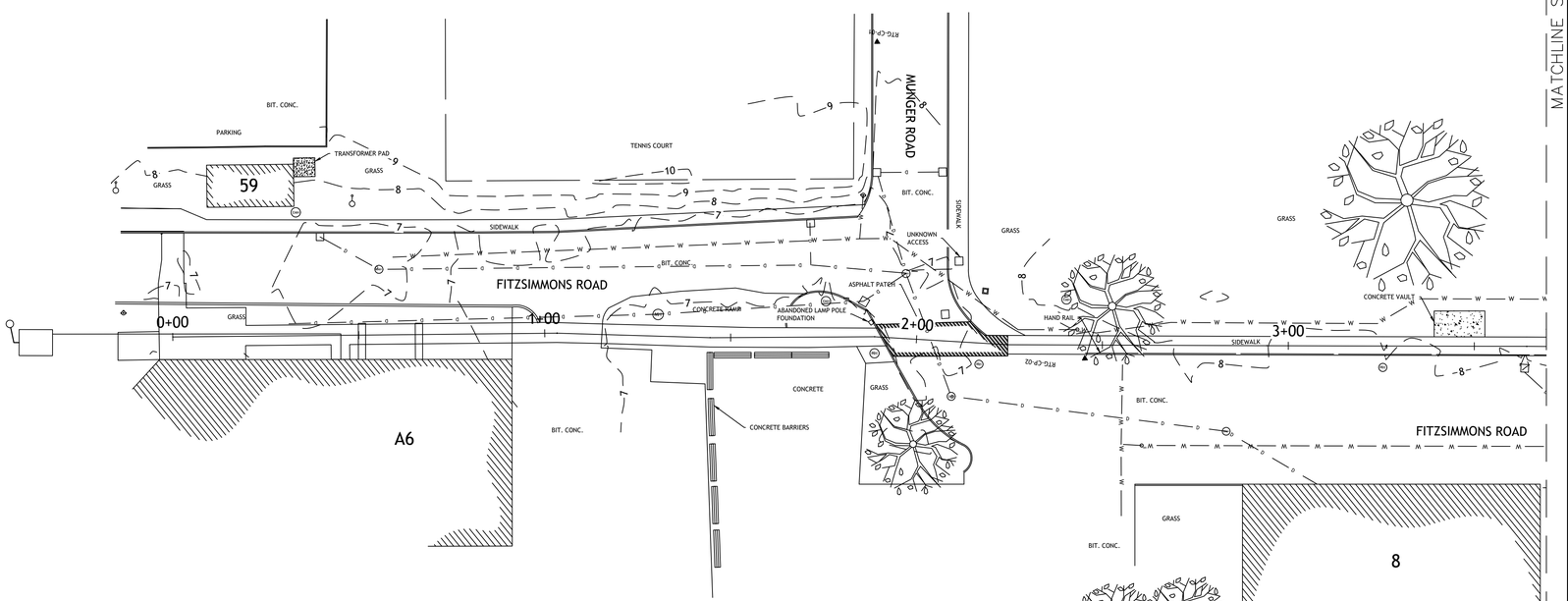

LEGEND

EXISTING

- CONTOUR
- EDGE OF PAVEMENT
- CURB
- TREE
- FENCE
- CONCRETE PAVEMENT
- MANHOLE
- CATCH BASIN

NO WORK ON THIS SHEET

GRAPHIC SCALE

20 0 10 20 40

(IN FEET)

NAVSTA DRAWING NO. 44497-412

MATCHLINE SEE C-103

SYM	DESCRIPTION	DATE	APPR

NAVFAC

SEAL

AMES & WHITAKER Architects
MEMBERS OF THE AMERICAN INSTITUTE OF ARCHITECTS
9 Liberty Street Bellingham, Massachusetts 02019 (508) 533-0044 Fax (508) 533-0047

A/E INFO

APPROVED

FOR COMMANDER NAVFAC

ACTIVITY

BID SET SUBMISSION

SATISFACTORY TO DATE 12/30/19

DES	DRW	CHK
EPZ	EPZ	ME

<<<PM/TM/>>	RC
BRANCH MANAGER	XX
CHIEF ENG/ARCH	XXX
<<<XX>>	XX

DEPARTMENT OF THE NAVY
NAVAL FACILITIES ENGINEERING COMMAND
NORTHEAST IPT

NAVAL FACILITIES ENGINEERING COMMAND ~ MID-ATLANTIC
NAVAL STATION - NORFOLK, VIRGINIA

NAVAL STATION NEWPORT
NEWPORT, RI

DECENTRALIZE STEAM AT BOILER PLANT A6

EXISTING CONDITIONS

SCALE: AS NOTED

EPROJECT NO.: 1389839

CONSTR. CONTR. NO.

NAVFAC DRAWING NO. 12799438

SHEET 8 OF 65

C-102

DRAWFORM REVISION: 10 MARCH 2009

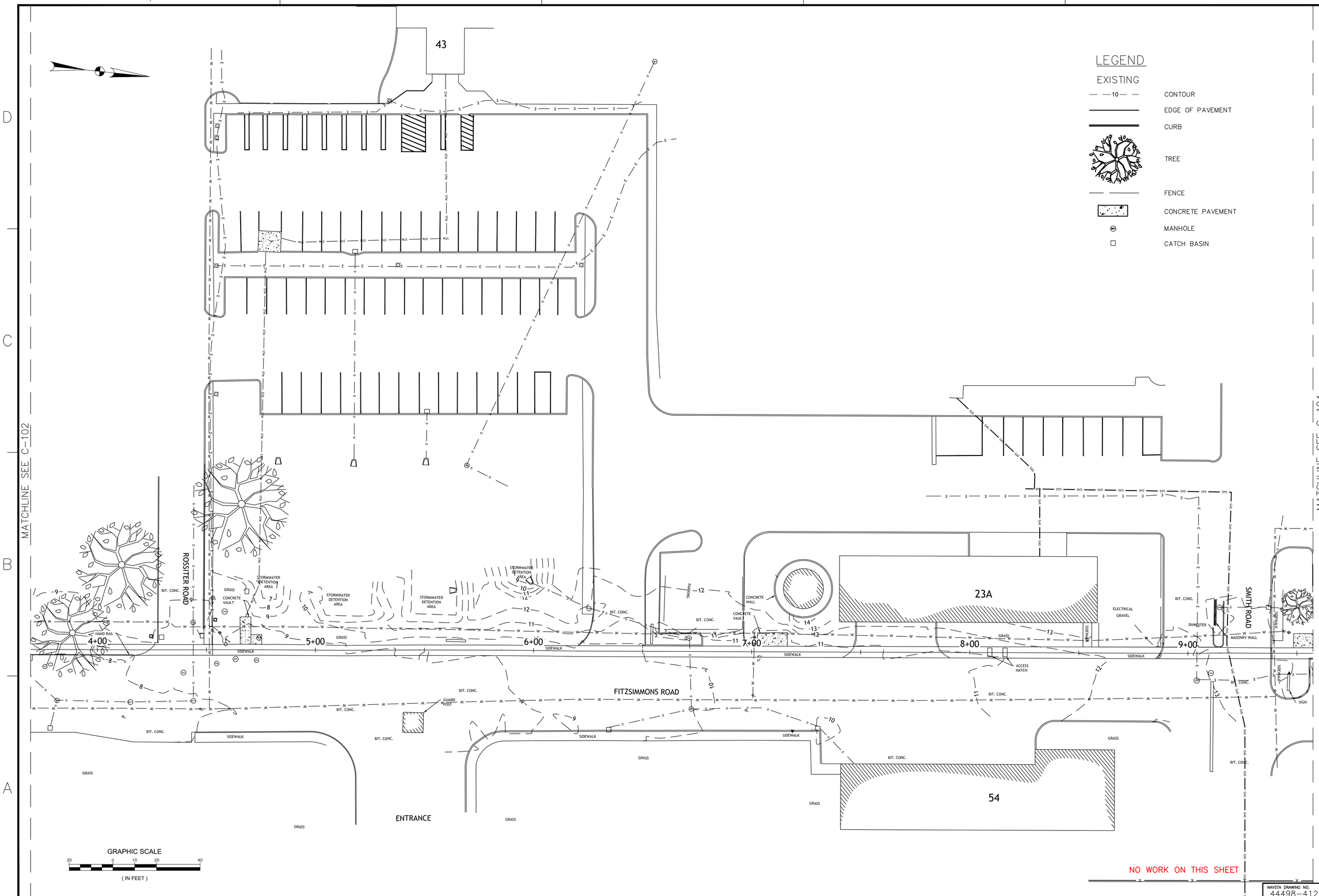

SYM	DESCRIPTION	DATE	APPR

NAVFAC

SEAL

AMES & WHITAKER Architects
A MEMBER OF THE AMERICAN INSTITUTE OF ARCHITECTS
9 Liberty Road Bethesda, Maryland 20814 (301) 652-1044 Fax (301) 652-4007

A/E INFO

APPROVED

FOR COMMANDER NAVFAC

ACTIVITY

BID SET SUBMISSION

SATISFACTORY TO DATE 12/30/19

DES	EPZ	DRW EPZ	CHK ME
<<<PM/DM>>		RC	
BRANCH MANAGER		XX	
CHIEF ENG/ARCH		XXX	
<<<XXX>>		XX	

DEPARTMENT OF THE NAVY
NAVAL FACILITIES ENGINEERING COMMAND ~ MID-ATLANTIC
NORTHEAST IPT
NAVAL FACILITIES ENGINEERING COMMAND
NAVAL STATION – NORFOLK, VIRGINIA
NAVAL STATION NEWPORT
NEWPORT, RI

DECENTRALIZE STEAM AT BOILER PLANT A6

EXISTING CONDITIONS

SCALE: AS NOTED

EPROJECT NO.: 1389839

CONSTR. CONTR. NO.

NAVFAC DRAWING NO.
12799439

SHEET 9 OF 65

C-103

NAVSTA DRAWING NO.
44498-412

DRAWFORM REVISION: 10 MARCH 2009

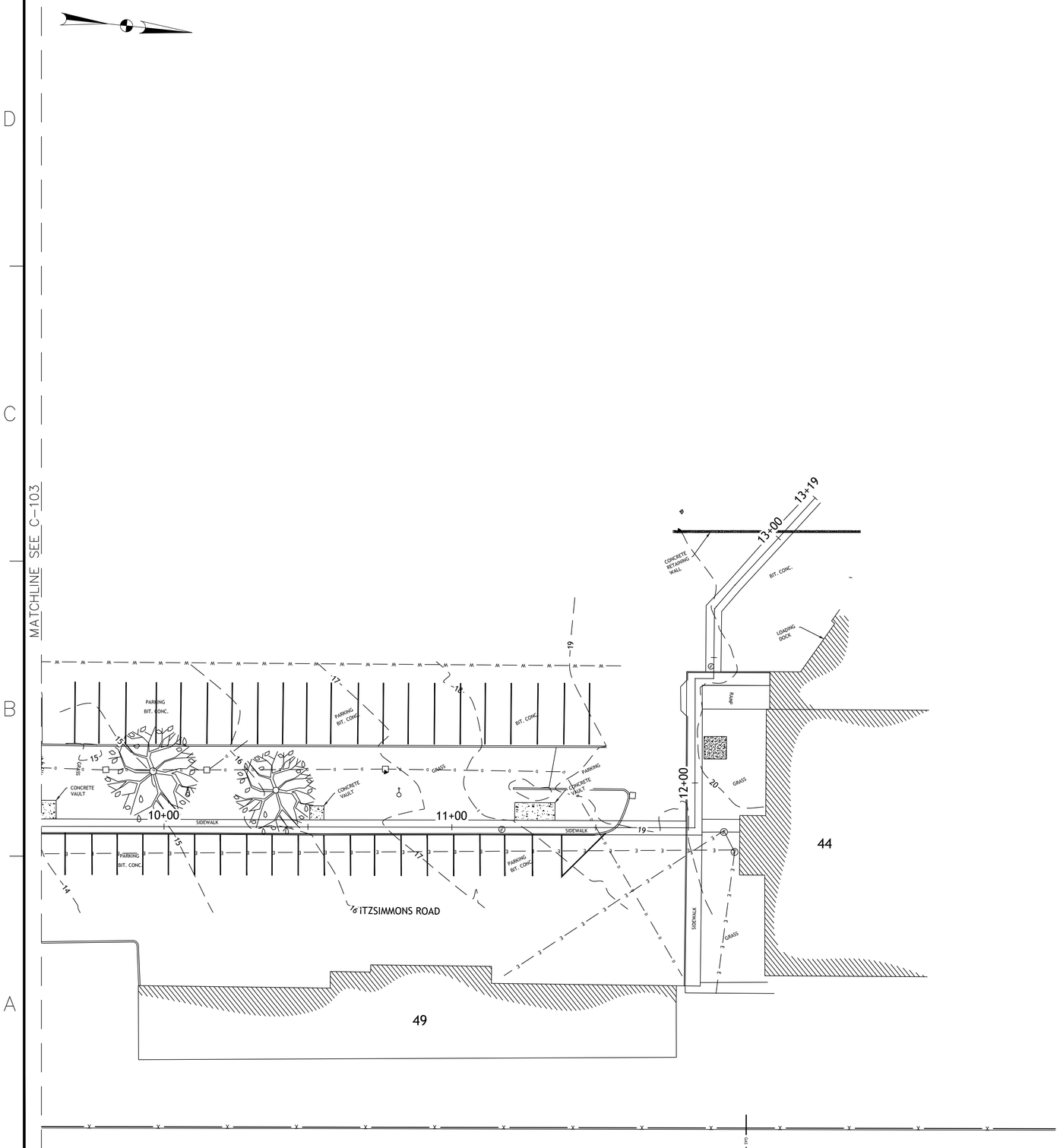

LEGEND

EXISTING

- CONTOUR
- EDGE OF PAVEMENT
- CURB
- TREE
- FENCE
- CONCRETE PAVEMENT
- MANHOLE
- CATCH BASIN

GRAPHIC SCALE

20 0 10 20 40

(IN FEET)

NO WORK ON THIS SHEET

NAVSTA DRAWING NO. 44499-412

SYM	DESCRIPTION	DATE	APPR

NAVFAC

SEAL

AMES & WHITAKER Architects
MEMBERS OF THE AMERICAN INSTITUTES OF ARCHITECTS
9 Liberty Street Bellingham, Massachusetts 02019 (508) 533-0044 Fax (508) 533-0047

A/E INFO

APPROVED

FOR COMMANDER NAVFAC

ACTIVITY

BID SET SUBMISSION

SATISFACTORY TO DATE 12/30/19

DES	EPZ	DRW EPZ	CHK ME
<<PM/DM>>	RC		
BRANCH MANAGER	XX		
CHIEF ENG/ARCH	XXX		
<<XXX>>	XX		

DEPARTMENT OF THE NAVY
NAVAL FACILITIES ENGINEERING COMMAND
NORTHEAST PT

NAVAL FACILITIES ENGINEERING COMMAND ~ MID-ATLANTIC
NAVAL STATION ~ NORFOLK, VIRGINIA

NAVAL STATION NEWPORT
NEWPORT, RI

DECENTRALIZE STEAM AT BOILER PLANT A6

EXISTING CONDITIONS

SCALE: AS NOTED

EPROJECT NO.: 1389839

CONSTR. CONTR. NO.

NAVFAC DRAWING NO. 12799440

SHEET 10 OF 65

C-104

DRAWFORM REVISION: 10 MARCH 2009

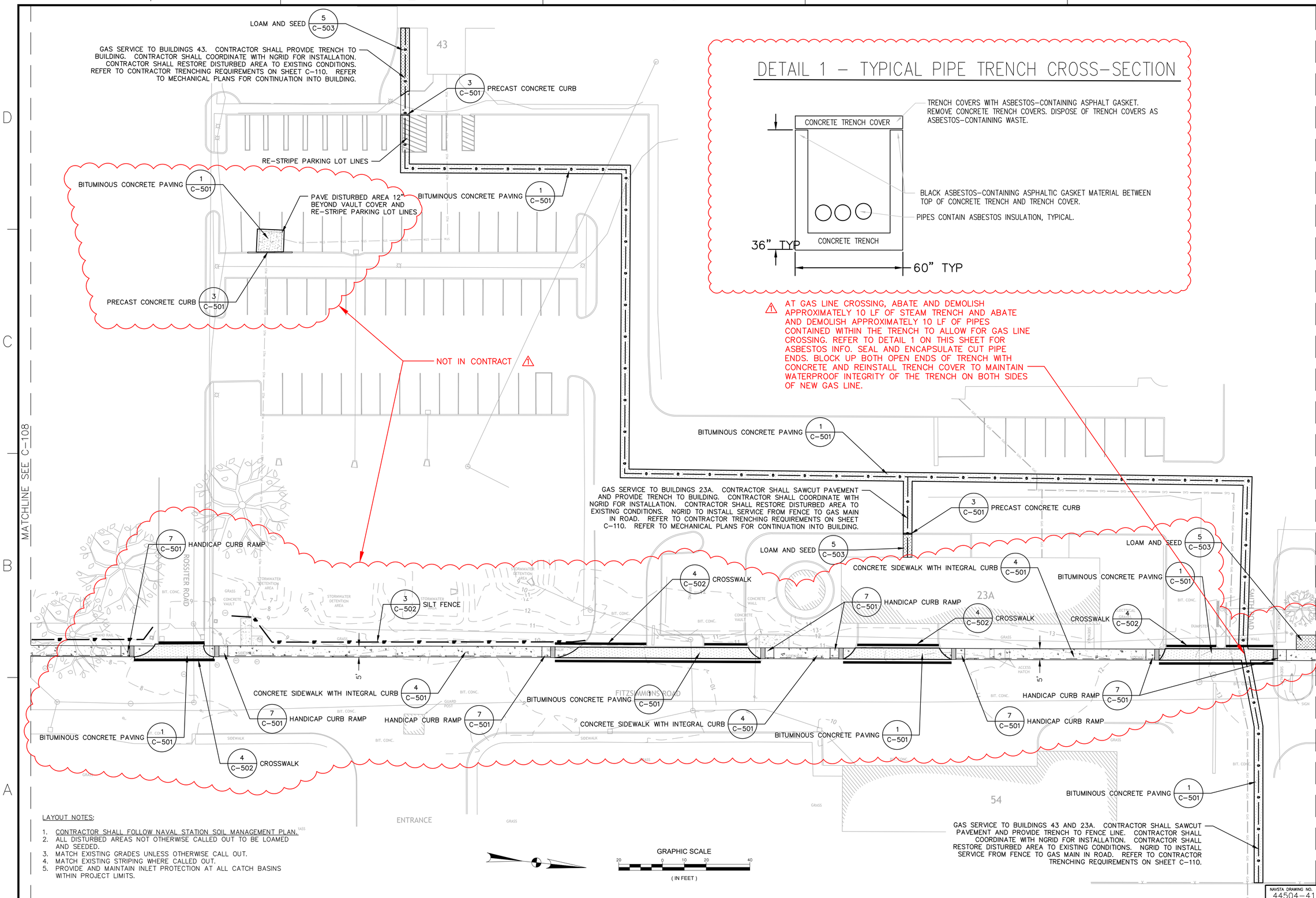

DETAIL 1 – TYPICAL PIPE TRENCH CROSS-SECTION

1 AT GAS LINE CROSSING, ABATE AND DEMOLISH APPROXIMATELY 10 LF OF STEAM TRENCH AND ABATE AND DEMOLISH APPROXIMATELY 10 LF OF PIPES CONTAINED WITHIN THE TRENCH TO ALLOW FOR GAS LINE CROSSING. REFER TO DETAIL 1 ON THIS SHEET FOR ASBESTOS INFO. SEAL AND ENCAPSULATE CUT PIPE ENDS. BLOCK UP BOTH OPEN ENDS OF TRENCH WITH CONCRETE AND REINSTALL TRENCH COVER TO MAINTAIN WATERPROOF INTEGRITY OF THE TRENCH ON BOTH SIDES OF NEW GAS LINE.

LAYOUT NOTES:

1. CONTRACTOR SHALL FOLLOW NAVAL STATION SOIL MANAGEMENT PLAN.
2. ALL DISTURBED AREAS NOT OTHERWISE CALLED OUT TO BE LOAMED AND SEEDED.
3. MATCH EXISTING GRADES UNLESS OTHERWISE CALL OUT.
4. MATCH EXISTING STRIPING WHERE CALLED OUT.
5. PROVIDE AND MAINTAIN INLET PROTECTION AT ALL CATCH BASINS WITHIN PROJECT LIMITS.

STM	DESCRIPTION	DATE	APPR
1	REVISION	6-25-2026	

NAVFAC

SEAL

AMES & WHITAKER Architects
A MEMBER OF THE AMERICAN INSTITUTE OF ARCHITECTS
8 Liberty Road Hallowell, Maine 04347 (207) 622-3364 Fax (207) 622-4007

A/E INFO

APPROVED

FOR COMMANDER NAVFAC

ACTIVITY

BID SET SUBMISSION

SATISFACTORY TO DATE 12/30/19

DES EPZ	DRW EPZ	CHK	ME
<<PM/DM>>			RC
BRANCH MANAGER			XX
CHIEF ENG/ARCH			XXX
<<XX>>			XX

DEPARTMENT OF THE NAVY
NAVAL FACILITIES ENGINEERING COMMAND
NORTHEAST IPT
NAVAL FACILITIES ENGINEERING COMMAND ~ MID-ATLANTIC
NAVAL STATION – NORFOLK, VIRGINIA
NAVAL STATION NEWPORT
NEWPORT, RI

DECENTRALIZE STEAM AT BOILER PLANT A6

SITE LAYOUT

SCALE: AS NOTED
EPROJECT NO.: 1389839
CONSTR. CONTR. NO.
NAVFAC DRAWING NO. 12799445
SHEET 15 OF 65

NAVSTA DRAWING NO. 44504-412

C-109

DRAWFORM REVISION: 10 MARCH 2009

LAYOUT NOTES:

1. CONTRACTOR SHALL FOLLOW NAVAL STATION SOIL MANAGEMENT PLAN.
2. ALL DISTURBED AREAS NOT OTHERWISE CALLED OUT TO BE LOAMED AND SEEDED.
3. MATCH EXISTING GRADES UNLESS OTHERWISE CALL OUT.
4. MATCH EXISTING STRIPING WHERE CALLED OUT.
5. PROVIDE AND MAINTAIN INLET PROTECTION AT ALL CATCH BASINS WITHIN PROJECT LIMITS.

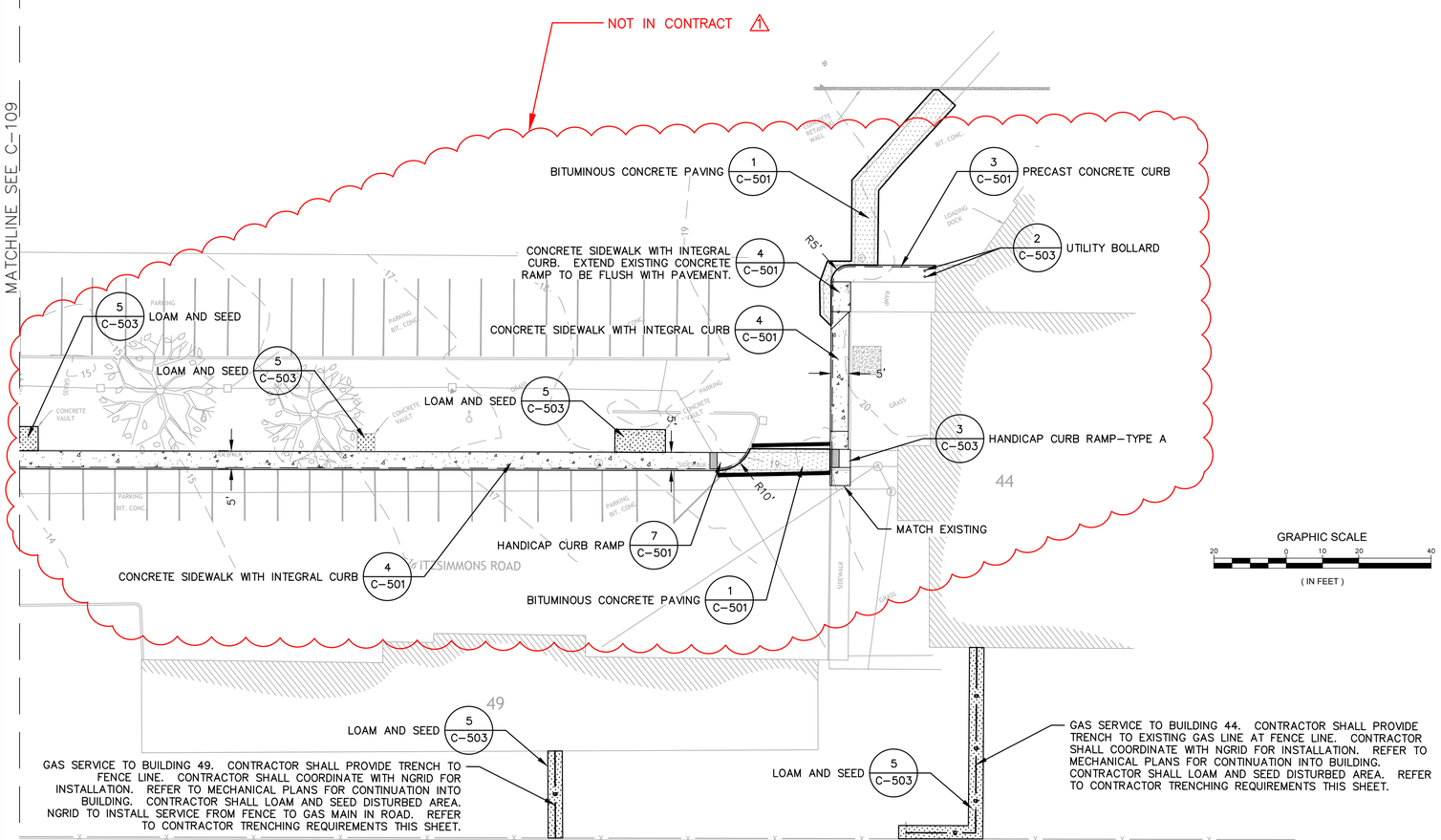

nationalgrid
HERE WITH YOU. HERE FOR YOU.

Contractor Trenching Requirements
Rhode Island

Customer Obligations

- Prior to beginning any outdoor construction that involves digging, excavating, trenching or grading, remember to call **811** or Dig Safe at **888-DIG-SAFE** (888-344-7233). State laws require advance notice of at least 48 to 72 hours (excluding weekends and holidays) before you get ready to begin your outdoor project.
- Coordinate installation schedule with National Grid.
- Any excavation within 18 inches of existing mains and/or services shall be hand dug. Expose existing gas service stub or main (where applicable) and fully excavate trench in accordance with trench specifications below.
- Provide and place a minimum of 6 inches of padding sand or suitable fill (subject to gas company approval) in the bottom of trench prior to gas company arrival.
- Provide and place sufficient padding sand around the gas line along the entire length of the trench to provide 6 inches of padding.
- Backfill balance of entire trench with suitable fill when National Grid work crews are on site.

National Grid Obligations

- Inspect for trench specification compliance.
- Provide pipe and related materials including fittings, tracer wire and warning tape.

Trench Specifications

- Bottom of trench must be smooth, as level as practical and free of rocks and other abrasives.
- Padding sand and suitable fill (subject to approval by National Grid) should be free of stones or other abrasive material.
- Gas service must have a minimum separation of 3 feet from parallel utilities.
- Maintain a minimum of 1 foot separation when crossing other utilities (subject to approval by National Grid).

Recommended Cover Requirements	Streets & Roads	Private Property
Services	24"	18"
Distribution Mains	30"	30"

Trench Specifications
Maximum Trench Depth: 36" (service)
Maximum Trench Depth: 48" (main)

Pipe Diameter	Recommended Trench Width
≤ 6"	18" min.
8"	24"
10", 12"	30"

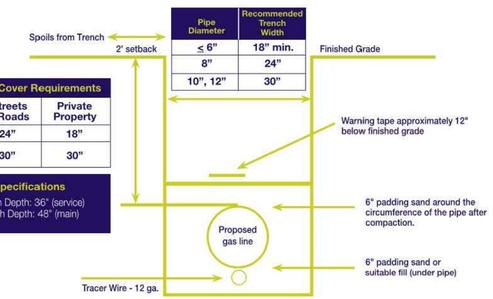

CM6135 (10/15) Contractor Trenching Requirements

GAS INSTALLATION REQUIREMENTS

NAVSTA DRAWING NO. 44505-412

SYM	DESCRIPTION	DATE	APPR
1	REVISION	6-25-2026	

NAVFAC

SEAL

AMES & WHITAKER Architects
MEMBERS OF THE AMERICAN INSTITUTE OF ARCHITECTS
9 Liberty Road Hingham, Massachusetts 02043 (781) 83-0844 Fax (781) 83-0847

A/E INFO

APPROVED

FOR COMMANDER NAVFAC

ACTIVITY
BID SET SUBMISSION

SATISFACTORY TO DATE 12/30/19

DES	DRW	CHK
EPZ	EPZ	ME

<<PM/DM>>	RC
BRANCH MANAGER	XX
CHIEF ENG/ARCH	XXX
<<XXX>>	XX

DEPARTMENT OF THE NAVY
NAVAL FACILITIES ENGINEERING COMMAND
NORTHEAST IPT
NAVAL FACILITIES ENGINEERING COMMAND – MIDLANTIC
NAVAL STATION – NORFOLK, VIRGINIA
NAVAL STATION NEWPORT
NEWPORT, RI
DECENTRALIZE STEAM AT BOILER PLANT A6
SITE LAYOUT

SCALE: AS NOTED
EPROJECT NO.: 1389839
CONSTR. CONTR. NO.
NAVFAC DRAWING NO. 12799446
SHEET 16 OF 65
C-110

DRAWFORM REVISION: 10 MARCH 2009

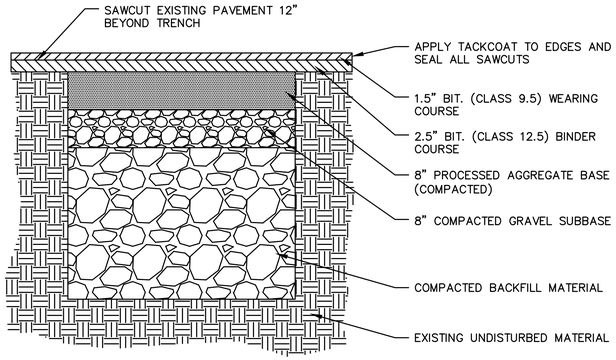

NOTE: PROVIDE 3" CLASS I BITUMINOUS FOR TEMPORARY PATCHES

BITUMINOUS CONCRETE PAVING/PATCHING (1)

NTS

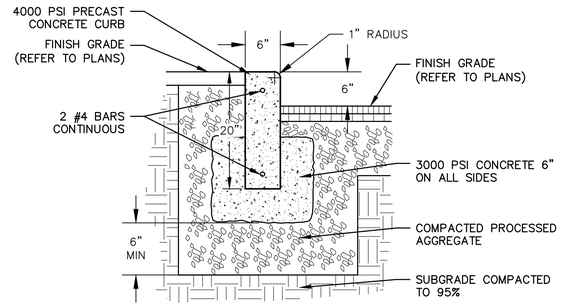

PRECAST CONCRETE CURB (3)

NTS

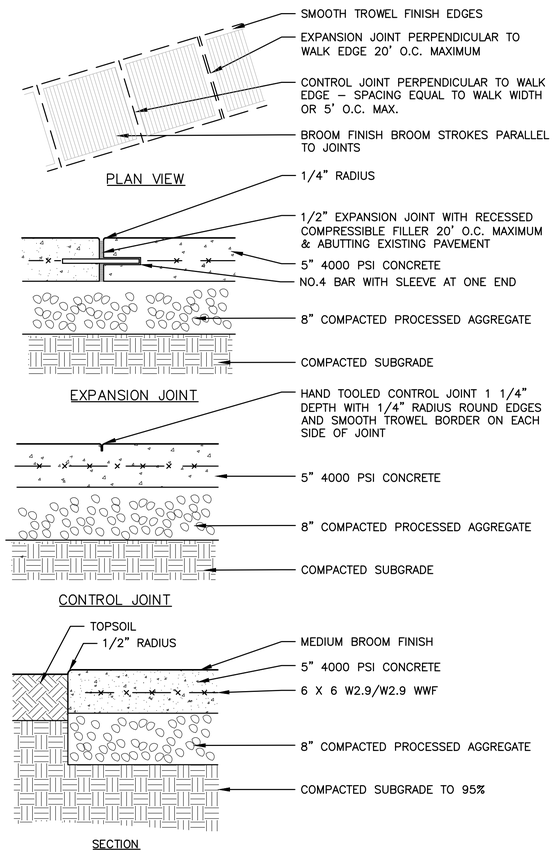

CONCRETE SIDEWALK DETAIL (2)

NTS

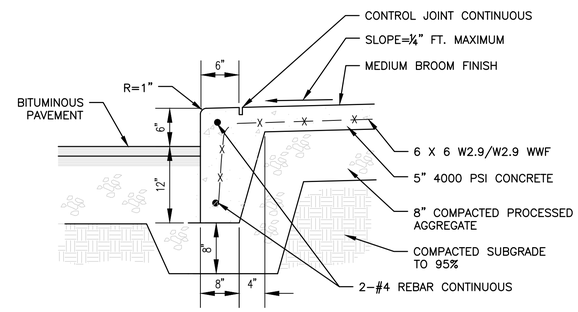

INTEGRAL CONCRETE CURB AND SIDEWALK (4)

NTS

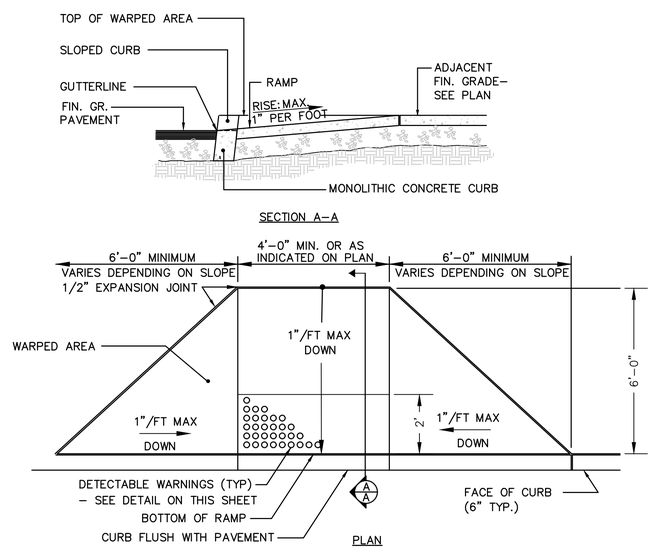

HANDICAP RAMP (5)

NTS

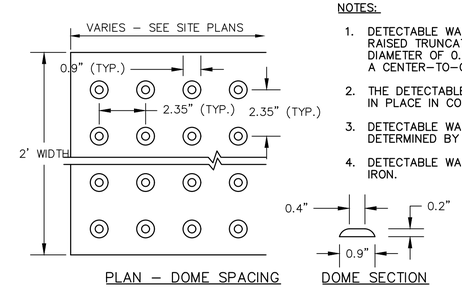

NOTES:

1. DETECTABLE WARNINGS SHALL CONSIST OF RAISED TRUNCATED DOMES WITH A DIAMETER OF 0.9", A HEIGHT OF 0.2" AND A CENTER–TO–CENTER SPACING OF 2.35".
2. THE DETECTABLE WARNINGS SHALL BE CAST IN PLACE IN CONCRETE SIDEWALK RAMPS.
3. DETECTABLE WARNINGS COLOR TO BE DETERMINED BY NAVY.
4. DETECTABLE WARNINGS SHALL BE DUCTILE IRON.

DETECTABLE WARNINGS DETAIL (6)

NTS

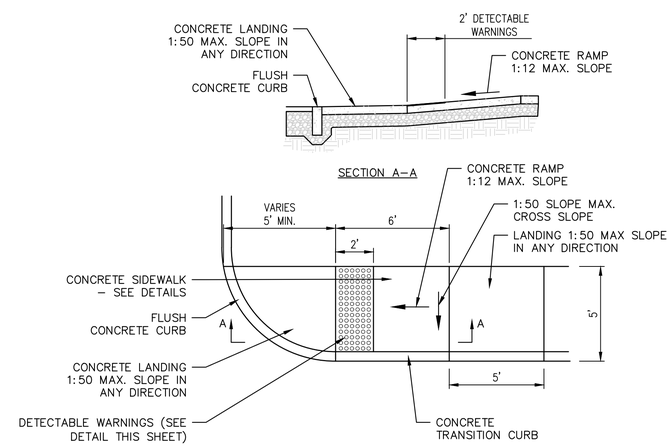

CURB RAMP (7)

NTS

DES	EPZ	DRW EPZ	CHK ME
<<PM/DM>>	RC		
BRANCH MANAGER	XX		
CHIEF ENG/ARCH	XXX		
<<XXX>>	XX		

DEPARTMENT OF THE NAVY
NAVAL FACILITIES ENGINEERING COMMAND
NORTHEAST IPT
NAVAL FACILITIES ENGINEERING COMMAND – MID-ATLANTIC
NAVAL STATION – NORFOLK, VIRGINIA
NAVAL STATION NEWPORT
NEWPORT, RI
DECENTRALIZE STEAM AT BOILER PLANT A6
SITE DETAILS

SCALE: AS NOTED
EPROJECT NO.: 1389839
CONSTR. CONTR. NO.
NAVFAC DRAWING NO. 12799447
SHEET 17 OF 65
NAVSTA DRAWING NO. 44506–412
C-501

DRAWFORM REVISION: 10 MARCH 2009

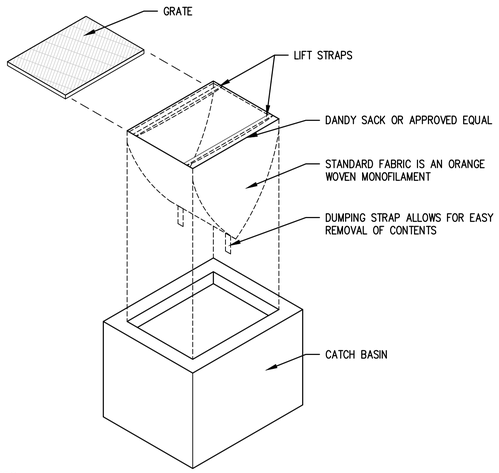

NOTES

1. PROVIDE SILT SACK IN ALL PROPOSED CATCH BASIN AND YARD DRAINS
2. SILT SACKS ARE TO BE INSPECTED DAILY AND REPLACED WHEN DAMAGED OR PLUGGED

SILT SACK DETAIL (1)

NTS

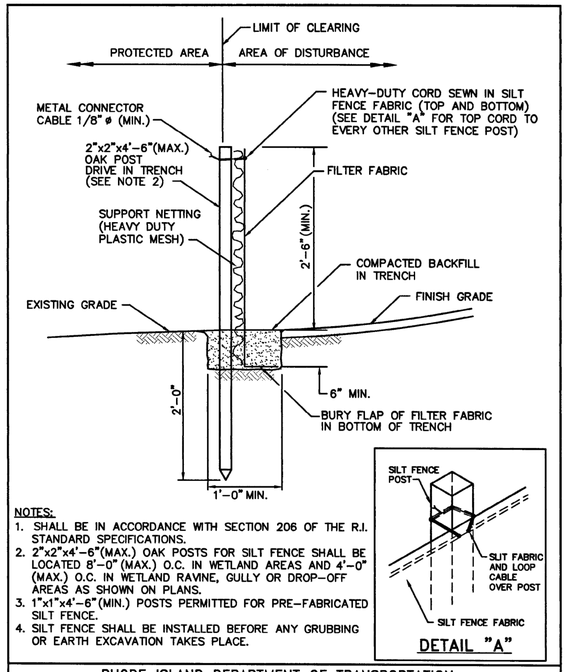

NOTES:

1. SHALL BE IN ACCORDANCE WITH SECTION 206 OF THE R.I. STANDARD SPECIFICATIONS.
2. 2"x2"x4'-6"(MAX.) OAK POSTS FOR SILT FENCE SHALL BE LOCATED 8'-0" (MAX.) O.C. IN WETLAND AREAS AND 4'-0" (MAX.) O.C. IN WETLAND RAVINE, GULLY OR DROP-OFF AREAS AS SHOWN ON PLANS.
3. 1"x1"x4'-6"(MIN.) POSTS PERMITTED FOR PRE-FABRICATED SILT FENCE.
4. SILT FENCE SHALL BE INSTALLED BEFORE ANY GRUBBING OR EARTH EXCAVATION TAKES PLACE.

RHODE ISLAND DEPARTMENT OF TRANSPORTATION

REVISIONS		
NO.	BY	DATE

SILT FENCE DETAIL

CHIEF ENGINEER TRANSPORTATION — CHIEF DESIGN ENGINEER TRANSPORTATION — JUNE 15, 1998 ISSUE DATE

R.I. STANDARD 9.2.0

GEOTEXTILE SILT FENCE DETAIL (3)

NTS

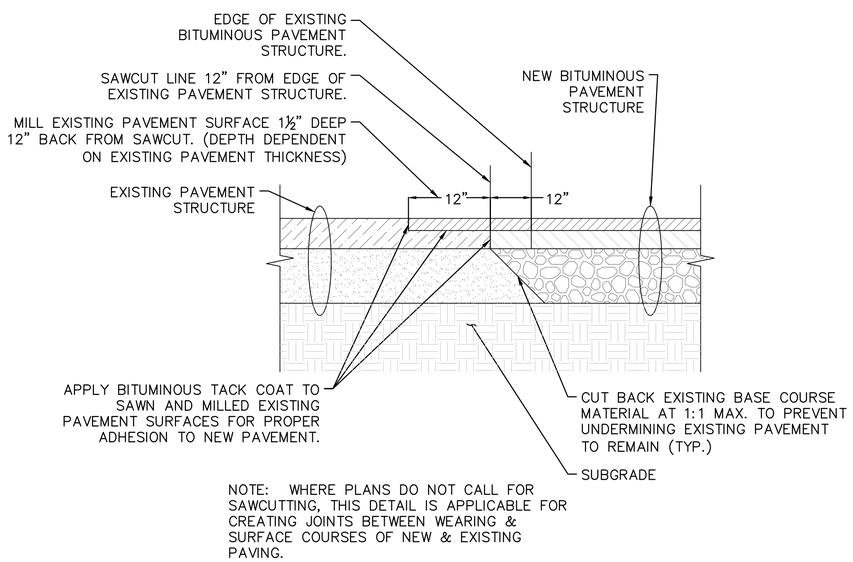

NOTE: WHERE PLANS DO NOT CALL FOR SAWCUTTING, THIS DETAIL IS APPLICABLE FOR CREATING JOINTS BETWEEN WEARING & SURFACE COURSES OF NEW & EXISTING PAVING.

PAVEMENT CONFORM DETAIL (2)

NTS

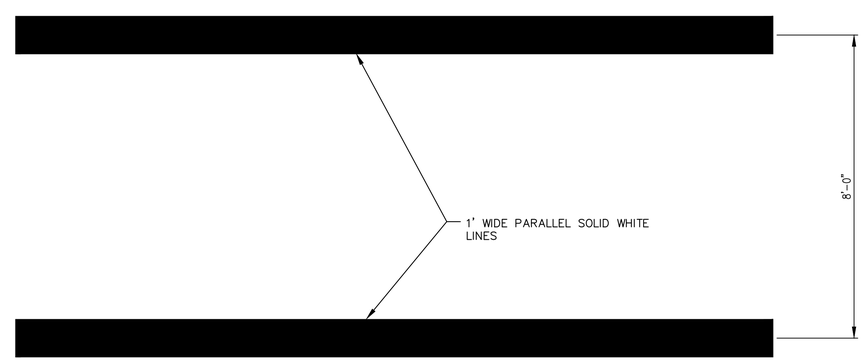

CROSSWALK DETAIL (4)

NTS

NAVSTA DRAWING NO. 44507-412

NAVFAC

AMES & WHITAKER Architects

APPROVED

FOR COMMANDER NAVFAC

ACTIVITY: BID SET SUBMISSION

SATISFACTORY TO DATE 12/30/19

DES	DRW	CHK
EPZ	EPZ	ME

<<PM/DM>> RC

BRANCH MANAGER XX

CHIEF ENG/ARCH XXX

<<XXX>> XX

DEPARTMENT OF THE NAVY — NAVAL FACILITIES ENGINEERING COMMAND — NORTHEAST PT.

NAVAL FACILITIES ENGINEERING COMMAND ~ MID-ATLANTIC — NAVAL STATION ~ NORFOLK, VIRGINIA

NAVAL STATION NEWPORT — NEWPORT, RI

DECENTRALIZE STEAM AT BOILER PLANT A6

SITE DETAILS

SCALE: AS NOTED

EPROJECT NO.: 1389839

CONSTR. CONTR. NO.

NAVFAC DRAWING NO. 12799448

SHEET 18 OF 65

C-502

DRAWFORM REVISION: 10 MARCH 2009

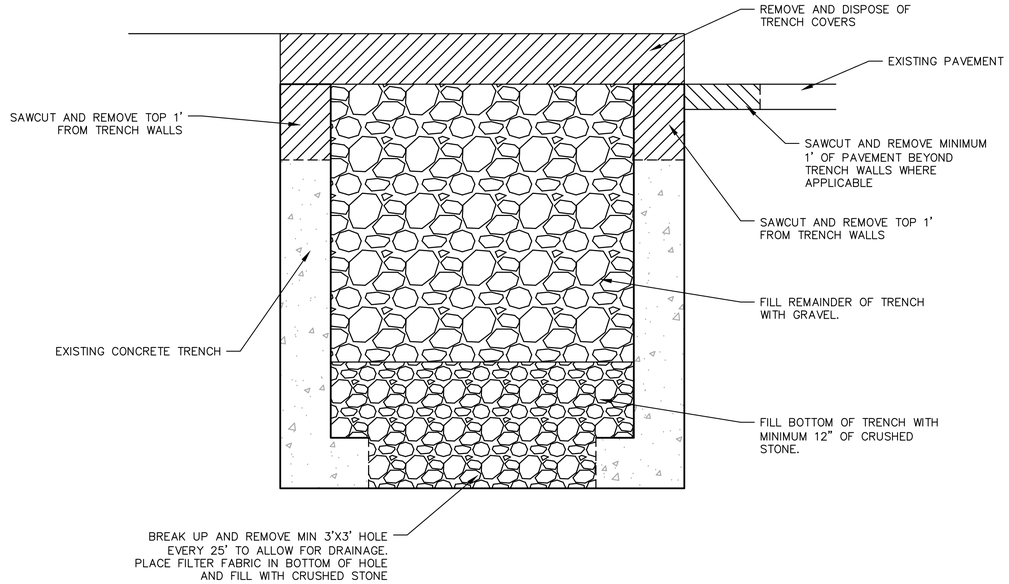

TRENCH ABANDONMENT DETAIL (1)

NTS

NOT IN CONTRACT 1

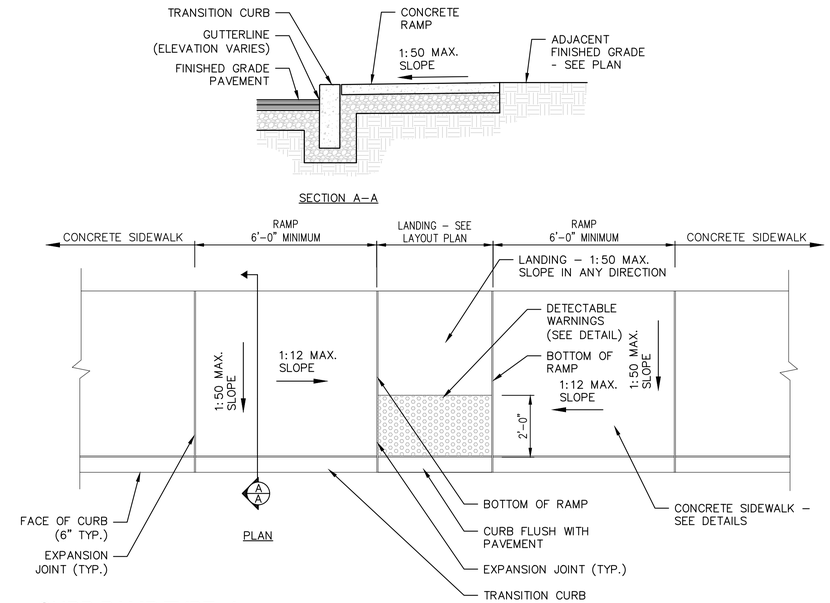

CURB RAMP TYPE- A (3)

NTS

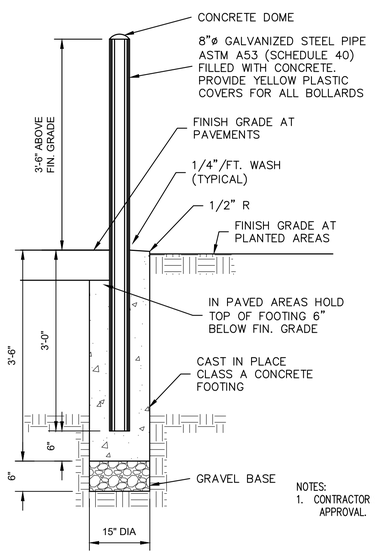

NOTES:
1. CONTRACTOR SHALL SUBMIT SHOP DRAWING FOR APPROVAL.

UTILITY BOLLARD (2)

NTS

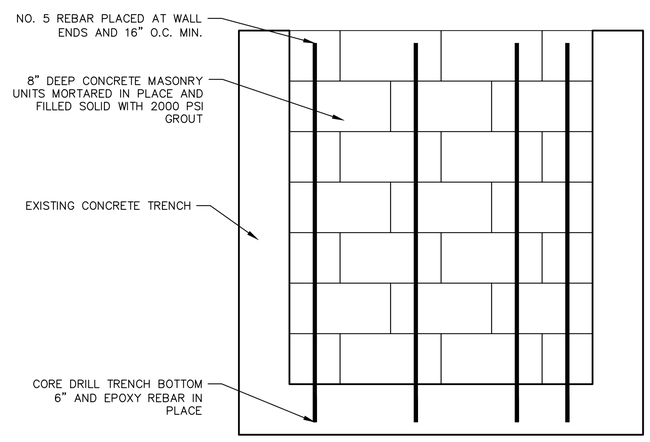

NOTE: COAT SIDE OF WALL EXPOSED TO EARTH WITH WATERPROOF COATING

MASONRY WALL DETAIL (4)

NTS

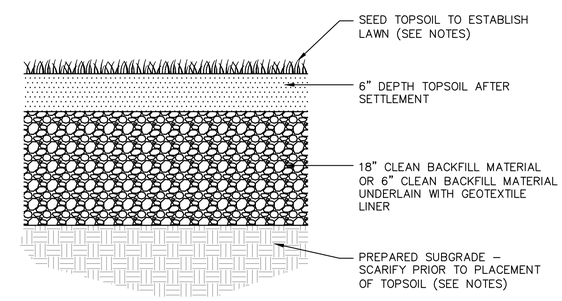

LOAM AND SEED (5)

NTS

NOTES:
1. SEE TURF AND GRASSES SPECIFICATION FOR SEED MIX AND INSTALLATION REQUIREMENTS.
2. SEE TOPSOIL SPECIFICATION FOR GRADING REQUIREMENTS OF SUBGRADE.

SYM	DESCRIPTION	DATE	APPR
1	REVISION	6–25–2026	

NAVFAC

SEAL

AMES & WHITAKER Architects
ASSOCIATION OF THE AMERICAN INSTITUTE OF ARCHITECTS
9 Liberty Road Bedington, Massachusetts 02026 (508) 833-0044 Fax (508) 833-0047

A/E INFO

APPROVED

FOR COMMANDER NAVFAC

ACTIVITY

BID SET SUBMISSION

SATISFACTORY TO DATE 12/30/19

DES EPZ DRW EPZ CHK ME

<<PM/DM>> RC

BRANCH MANAGER XX

CHIEF ENG/ARCH XXX

<<XXX>> XX

DEPARTMENT OF THE NAVY
NAVAL FACILITIES ENGINEERING COMMAND
NORTHEAST IPT

NAVAL FACILITIES ENGINEERING COMMAND – MID-ATLANTIC
NAVAL STATION – NORFOLK, VIRGINIA

NAVAL STATION NEWPORT
NEWPORT, RI

DECENTRALIZE STEAM AT BOILER PLANT A6

SITE DETAILS

SCALE: AS NOTED

EPROJECT NO.: 1389839

CONSTR. CONTR. NO.

NAVFAC DRAWING NO. 12799449

SHEET 19 OF 65

NAVSTA DRAWING NO. 44508–412

C-503

DRAWFORM REVISION: 10 MARCH 2009

SEE DRAWING S102 FOR GENERAL NOTES AND CONCRETE REPAIR DETAILS.

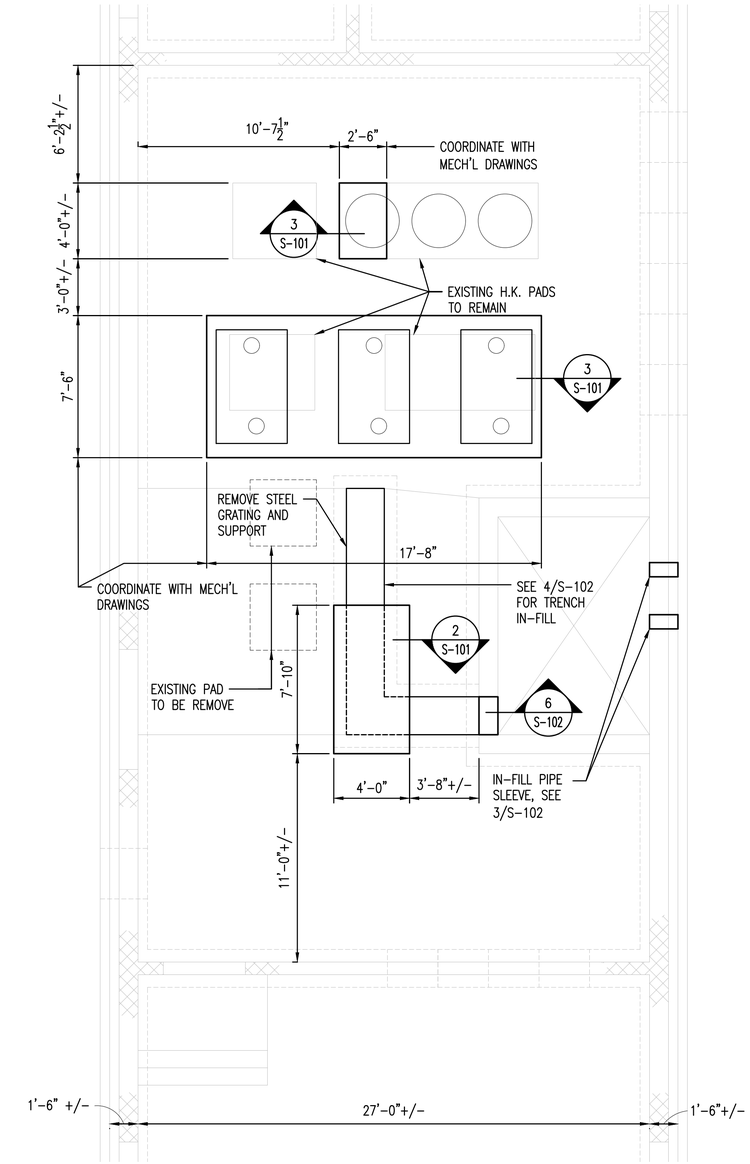

A PARTIAL FOUNDATION PLAN
BUILDING 23A

0 1' 2' 4' 8'
1/4" = 1'-0"

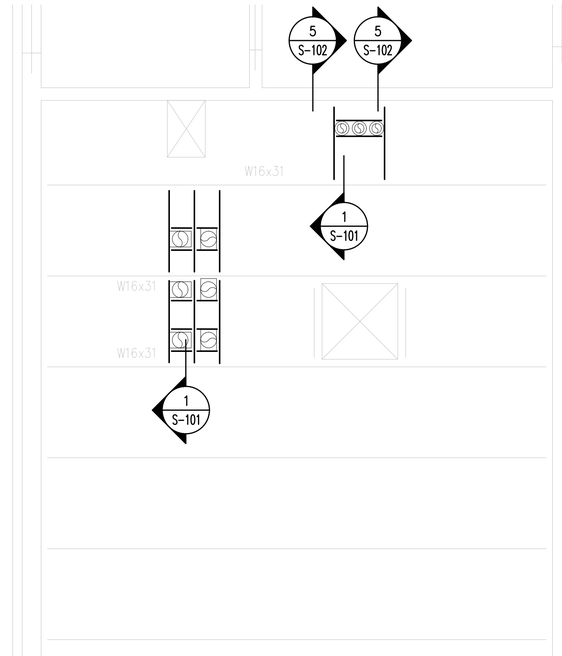

B PARTIAL ROOF FRAMING PLAN
BUILDING 23A

0 1' 2' 4' 8'
1/4" = 1'-0"

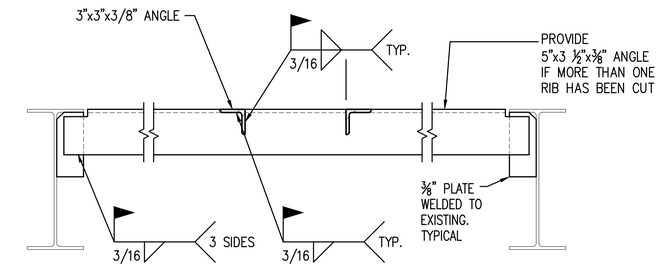

1 TYPICAL ROOF OPENING DETAIL
NTS

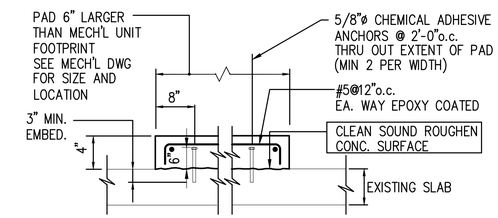

2 TYP. CONCRETE PAD @ MECH. UNIT
APPLIES AT BUILDING 23A, 43, 44, SEE MECH'L FOR SIZE & LOCATIONS

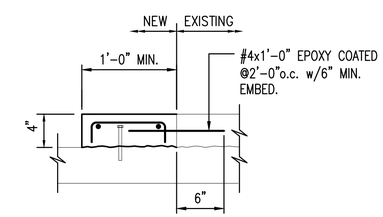

3 NEW CONCRETE PAD AT EXISTING CONCRETE PAD
SEE 2/S101 FOR ADDITIONAL INFO.

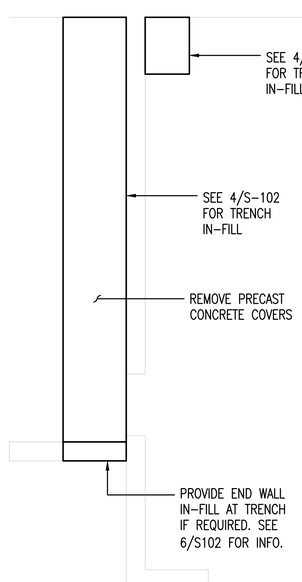

C PARTIAL FLOOR PLAN
BUILDING 49

0 1' 2' 4' 8'
1/4" = 1'-0"

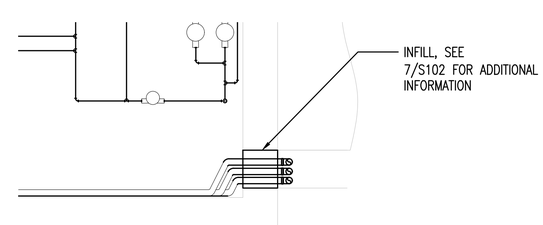

D PARTIAL FLOOR PLAN
BUILDING 44

0 1' 2' 4' 8'
1/4" = 1'-0"

BUILDING 44

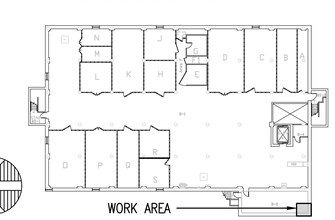

KEY PLAN

NAVSTA DRAWING NO.
44509-412

SYM	DESCRIPTION	DATE	APPR

NAVFAC

SEAL

AMES & WHITAKER Architects
MEMBERS OF THE AMERICAN INSTITUTE OF ARCHITECTS
9 Shady Road Bethlehem, Connecticut 06751 (203) 266-7534 Fax (203) 266-4597

JSA
John Smolen & Assoc., LLC
CONSULTING ENGINEERS
50 DEVINE STREET, UNIT A
NORTH HAVEN, CT. 06473

A/E INFO

APPROVED

FOR COMMANDER NAVFAC

ACTIVITY
BID SET SUBMISSION

SATISFACTORY TO DATE 12/30/19

DES JS	DRW MT	CHK JS	
<<PM/DM>>		RC	
BRANCH MANAGER		XX	
CHIEF ENG/ARCH		XXX	
<<XXX>>		XX	

DEPARTMENT OF THE NAVY
NAVAL FACILITIES ENGINEERING COMMAND
NORTHEAST IPT
NAVAL FACILITIES ENGINEERING COMMAND ~ MID-ATLANTIC
NAVAL STATION – NORFOLK, VIRGINIA
NAVAL STATION NEWPORT
NEWPORT, RI
DECENTRALIZE STEAM AT BOILER PLANT A6
PLANS, SECTIONS & DETAILS

SCALE: AS NOTED
EPROJECT NO.: 1389839
CONSTR. CONTR. NO.
NAVFAC DRAWING NO. 12799450
SHEET 20 OF 65

S101

DRAWFORM REVISION: 10 MARCH 2009

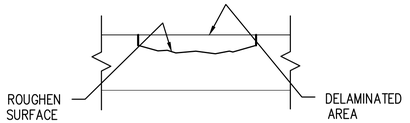

1 SECTION AT SPALL/DELAMINATION OF SLAB

NTS ASSUMED SQ.FT. OF REPAIR TO BE DETERMINED AFTER CONCRETE PADS ARE REMOVED

THE REPAIR DEALS WITH THE DELAMINATED CONCRETE AREAS.

1.) DETERMINE EXTENT OF DELAMINATED CONCRETE BY SOUNDING THE CONCRETE SURFACE.
2.) SAWCUT EDGE OF CONCRETTE TO BE REMOVED (1/2" DEPTH). REMOVE EFFECTED CONCRETE TO A SOUND BASE.
3.) CLEAN EXPOSED CONCRETE TO REMOVE ALL DUST, DEBRIS AND OTHER LOOSE CONTAMINATES. BLOW AREA FREE OF DUST.
4.) APPLY 2 COATS OF BONDING AGENT TO ALL ROUGHEN EXPOSED CONCRETE SURFACE BY BRUSH, ROLLER OR SPRAY.
5.) PREPARE POLYMER MODIFIED PORTLAND CEMENT TROWEL GRADE MORTAR WITH $^{3}/_{8}$" COARSE AGGREGATE.
6.) PLACE POLYMER MODIFIED PORTLAND CEMENT MORTAR WHILE SUBSTRATE IS SATURATED SURFACE DRY.
7.) BUILD TO ORIGINAL LEVEL TO MATCH EXISTING SURFACE LEVEL.

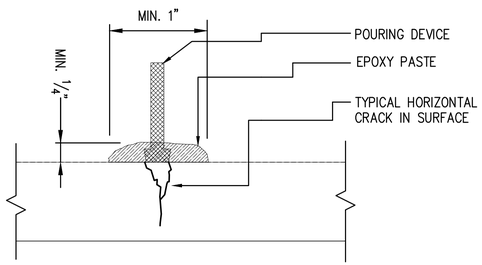

2 SECTION AT SLAB ON GRADE

NTS ASSUMED 40 LINEAL FEET OF CRACK

THE REPAIR DETAIL DEALS WITH MINOR HORIZONTAL SURFACE CRACKS ON THE SLAB ON GRADE

1.) CLEAN CRACKS AND ADJACENT SURFACE TO REMOVE ALL LOOSE CONCRETE DUST, DEBRIS AND SURFACE CONTAMINATES.
2.) FOLLOW PROPER MIXING AND APPLICATION PROCEDURE, FOR CRACK REPAIR AND INJECTION RESIN REFER TO MANUFACTURER PRODUCT GUIDELINES AND SPECIFICATIONS.
3.) PRIOR TO STARTING REPAIR VERIFY THE DEPTH OF CRACK AND EXISTING SURFACE CONCRETE CONDITION AT CRACK.
4.) IF WALL REINFORCING IS ENCOUNTERED SAND BLAST EXPOSED STEEL TO REMOVE RUST AND ANY LOOSE CONTAMINATES.
5.) APPLY TWO COATS OF BONDING AGENTS AND CORROSION PROTECTION SYSTEMS.
6.) PLACE PROPERLY MIXED EPOXY PASTE STRUCTURAL ADHESIVE OVER CRACKS AND AROUND EACH INJECTION PORT.
7.) INJECT EPOXY RESIN ADHESIVE.

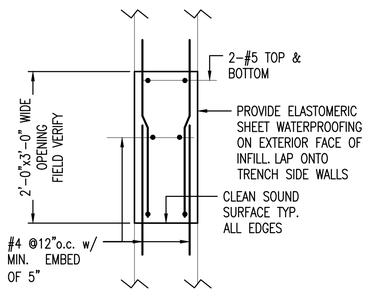

7 WALL IN-FILL BUILDING 44

1" = 1'-0" SEE MECH'L DWG. FOR INFO.

GENERAL NOTES:

GOVERNING CODE: ALL WORK SHALL CONFORM TO THE REQUIREMENTS OF THE 2015 INTERNATIONAL BUILDING CODE

GENERAL:

1. THE CONTRACTOR SHALL VERIFY, IN THE FIELD, ALL DIMENSIONS SHOWN OR MISSING ON DRAWINGS IN CONNECTION WITH EXISTING BUILDINGS AND NOTIFY CONTRACTING OFFICER OF ANY DISCREPANCIES PRIOR TO FABRICATION OR CONSTRUCTION.
2. THE CONTRACTOR SHALL NOTIFY THE CONTRACTING OFFICER OF ANY DISCREPANCIES IN ASSUMED EXISTING CONDITIONS PRIOR TO ANY WORK BEING DONE INVOLVING THAT CONDITION.
3. SLEEVES AND OPENINGS SHALL BE COORDINATED WITH ARCHITECTURAL AND MECHANICAL DRAWINGS. NO SLEEVING SHALL BE PERMITTED IN ANY BEAMS OR COLUMNS WITHOUT CONTRACTING OFFICERS APPROVAL.
4. THE CONTRACTOR SHALL IMMEDIATELY NOTIFY THE CONTRACTING OFFICER OF ANY CONDITION WHICH IN HIS OPINION MIGHT ENDANGER THE STABILITY OF THE STRUCTURE OR CAUSE DISTRESS TO THE STRUCTURE.
5. THE CONTRACTOR SHALL PROVIDE TEMPORARY ERECTION BRACING AND SHORING FOR ALL STRUCTURAL MEMBERS AS REQUIRED FOR STRUCTURAL STABILITY OF THE STRUCTURE DURING ALL PHASES OF CONSTRUCTION. THE SAFETY OF SHORING AND BRACING IS THE RESPONSIBILITY OF THE CONTRACTOR.
6. THE GENERAL CONTRACTOR SHALL SUBMIT MATERIALS TO BE USED, PREPARATION OF SURFACES, APPLICATIONS OF REPAIR MATERIAL WITH SEQUENCE OF WORK FOR EACH REPAIR TYPE BEFORE STARTING THE WORK OF THE REPAIR.

CONCRETE:

1. ALL DETAILING, FABRICATION AND PLACING OF REINFORCING BARS, UNLESS OTHERWISE NOTED, MUST FOLLOW THE ACI MANUAL OF STANDARD PRACTICE FOR DETAILING REINFORCED CONCRETE STRUCTURES (ACI 315 - LATEST EDITION).
2. THE "BUILDING CODE REQUIREMENTS FOR REINFORCED CONCRETE" (ACI 318) SHALL GOVERN FOR ALL CONCRETE WORK.
3. REINFORCING BARS SHALL CONFORM TO ASTM A615 - GRADE 60; WELDED WIRE FABRIC (WWF) ASTM A185, PLACE AND PROTECT REINFORCING. ALL EXTERIOR REINFORCING & TIE WIRES EPOXY COATED.
4. CLASS 1 - ALL CONCRETE UNLESS OTHERWISE NOTED - N.W. 4000 PSI., MAX. WATER/CEMENT RATIO .45. USE .40 ON EXTERIOR. MAX. AGGREGATE 3/4". CLASS 2 - SLAB ON GRADE - N.W. 3500 PSI., MAX. WATER/CEMENT RATIO .45 AIR CONTENT 4 PERCENT, 3/4" MAX. AGGREGATE.
5. ALL REINFORCING (UNLESS OTHERWISE NOTED) SHALL BE CONTINUOUS (CONT.) AND SHALL HAVE LAPPED SPLICES WITH HOOKS (HK) AT CORNERS AND NON-CONTINUOUS ENDS. MINIMUM LAPS OR EMBEDMENT AS FOLLOWS - 40 BAR DIAMETERS, UNLESS OTHERWISE NOTED.
6. W.W.F. SHALL BE CONTINUOUS FULL EXTENT OF SLABS AND TO HAVE ENDS AND SIDE LAPS ONE FULL MESH AND EXTEND FULLY INTO END CONDITION.
7. PROPOSED CONSTRUCTION JOINTS (C.J.) SHALL BE SHOWN ON SHOP DRAWINGS AND APPROVED BY ENGINEER.
8. SHOP DRAWINGS TO SHOW: WALL AND BEAM REINFORCING ON ELEVATIONS, INCLUDING DOWELS FOR DISCONTINUOUS ENDS OF BEAMS, SLABS AND LOCATION OF CONSTRUCTION AND CONTROL JOINT. DETAILING AND AMOUNT OF REINFORCING FOR CONDITIONS NOT SHOWN SHALL BE PROVIDED AS SHOWN IN SIMILAR CONDITIONS. CONTRACTOR TO SHOW INSERTS, OPENINGS, SLEEVES, AND ANY OTHER OBJECTS WHICH MAY AFFECT PLACING OF REBARS.
9. COMPLY WITH ACI 304 FOR CONCRETE PLACEMENT, CONSOLIDATION. CONFORM TO ACI 306, 305 FOR COLD AND HOT WEATHER CONCRETE PLACEMENT. CONTRACTOR TO SUBMIT THE COLD AND HOT WEATHER PROCEDURE BEFORE ANY WORK IS DONE.
10. NEWLY PLACED CONCRETE SHALL BE PROTECTED AGAINST LOW OR HIGH TEMPERATURES AND AGAINST RAPID LOSS OF MOISTURE. ALL CONCRETE SHALL BE CURED FOR AT LEAST 7 DAYS BY CURING METHODS APPROVED BY ENGINEER. DURING CURING PERIOD, THE CONCRETE SHALL BE MAINTAINED AT A TEMPERATURE OF AT LEAST 50 DEGREES F.
11. TESTING LAB SHALL TAKE TEST CYLINDERS FOR EACH CLASS OF CONCRETE, MIN. 5 CYLINDERS. PROVIDE 7 DAY AND 28 DAY STRENGTH RESULTS.
12. ON GRADE TROWEL FINISH, PROVIDE HARDENER/SEALER.

CONCRETE SLAB REPAIR OR PATCHING:

1. SUBMIT PRODUCT TYPE THAT SHALL BE USED FOR REVIEW AND ACCEPTANCE BY ENGINEER BEFORE THAT PORTION OF WORK IS STARTED.
2. SEE SECTIONS AND DETAILS FOR ADDITIONAL INFORMATION.

STRUCTURAL STEEL:

1. WORK OF THIS SECTION INCLUDES ALL LABOR, MATERIALS, EQUIPMENT AND SERVICES NECESSARY TO COMPLETE THE STRUCTURAL STEEL WORK AS SHOWN ON THE DRAWINGS. DO NOT MODIFY ANY CONNECTIONS SHOWN WITHOUT WRITTEN APPROVAL OF THE ARCHITECT.
2. STEEL SHALL CONFORM TO THE "SPECIFICATION FOR THE DESIGN, FABRICATION, AND ERECTION OF STRUCTURAL STEEL FOR BUILDINGS", LATEST EDITION, OF THE AMERICAN INSTITUTE OF STEEL CONSTRUCTION.
3. STRUCTURAL STEEL SHALL CONFORM TO THE REQUIREMENTS OF ASTM A572 GRADE 50, EXCEPT THAT BARS, PLATES, AND ANGLES MAY BE ASTM A36.
4. SHOP DRAWINGS, FABRICATION AND ERECTION SHALL CONFORM TO AISC MANUAL OF STEEL CONSTRUCTION, LATEST EDITION, AS AMENDED TO DATE, UNLESS OTHERWISE SHOWN. SUBMIT SHOP DRAWINGS IN TRIPLICATE, PROVIDE ERECTION AND PIECE DRAWINGS.
5. ALL CONNECTIONS SHALL BE SUFFICIENT TO DEVELOP THE CAPACITY OF BEAMS FOR SIZE AND SPANS SHOWN, EXCEPT WHERE DETAILS OR REACTIONS ARE GIVEN.
6. ALL SHOP CONNECTIONS SHALL BE WELDED UNLESS OTHERWISE SHOWN OR REQUIRED FOR ERECTION.
7. BEAM TO BEAM OR BEAM TO GIRDER CONNECTIONS SHALL BE DOUBLE ANGLE CONNECTIONS UNLESS OTHERWISE SHOWN.
8. FIELD CONNECTIONS SHALL BE BOLTED UNLESS OTHERWISE SHOWN.
9. ALL BOLTS SHALL BE H.S. 3/4" DIAMETER MINIMUM WITH TENSION FORCE AS REQUIRED BY MANUAL OF STEEL CONSTRUCTION UNLESS OTHERWISE SHOWN OR REQUIRED BY REACTIONS. USE APPROPRIATE NUTS AND WASHERS. BOLTS TO BE SLIP CRITICAL.
10. ALL STEEL SHALL RECEIVE ONE COAT OF SHOP PAINT. DO NOT PAINT WITHIN 2" OF FIELD WELDING. TOUCH UP WHERE ACCESSIBLE.
11. ALL WELDING SHALL BE DONE BY WELDERS HAVING CERTIFICATES OF QUALIFICATION. WELDING SHALL CONFORM TO STANDARDS OF AMERICAN WELDING SOCIETY. ARC WELDING ELECTRODES - E70 SERIES.
12. ALL STRUCTURAL STEEL SHALL BE BRACED TEMPORARILY UNTIL ALL CONNECTIONS ARE COMPLETED. IT IS THE RESPONSIBILITY OF THE CONTRACTOR TO PROVIDE STABILITY OF THE STRUCTURE UNTIL THE STRUCTURE IS COMPLETELY CONNECTED.
13. ALL EXTERIOR EXPOSED STEEL (LINTELS, RELIEVING ANGLES, DIRECT SUPPORTS OF RELIEVING ANGLES AND ANY OTHER WITHIN CAVITIES EXPOSED TO MOISTURE, ETC) SHALL BE HOT DIPPED GALVANIZED.
14. OWNER WILL SELECT TESTING LABORATORY TO INSPECT WELDING AND BOLTING. THE GENERAL CONTRACTOR WILL COOPERATE AND ASSIST AS REQUIRED. THE GENERAL CONTRACTOR WILL INFORM THE TESTING LABORATORY WHEN AREAS OF STRUCTURES ARE READY FOR INSPECTION.

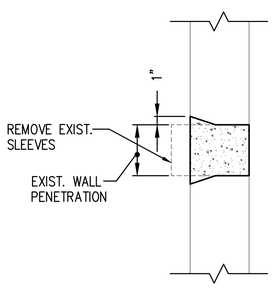

3 FILL-IN OF EXISTING SLEEVES

NTS SEE MECHANICAL DWGS. FOR LOCATION & AMOUNT

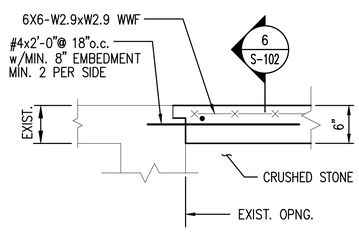

4 FILL-IN EXISTING TRENCH @ BLDG. 23A & 49

1" = 1'-0" SEE MECHANICAL & ARCHT'L DWGS. FOR LOCATION & AMOUNT

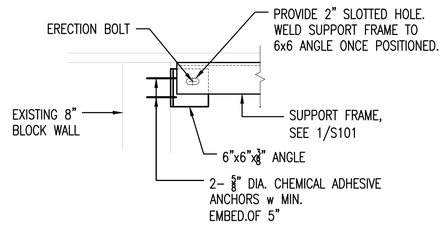

5 OPENING SUPPORT END CONNECTION

1" = 1'-0"

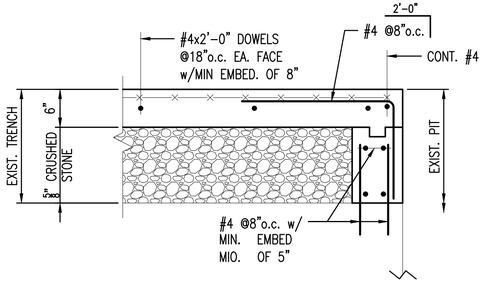

6 END OF IN-FILL TRENCH DETAIL

1" = 1'-0"

							APPR
							DATE
							DESCRIPTION
							SYM

NAVFAC

SEAL

AMES & WHITAKER Architects
MEMBERS OF THE AMERICAN INSTITUTE OF ARCHITECTS
9 Shady Road Hamden, Connecticut 06518 (203) 62-1011 Fax (203) 62-1007

JSA
John Smolen & Assoc., LLC
CONSULTING ENGINEERS
50 DEVINE STREET, UNIT A
NORTH HAVEN, CT. 06473

A/E INFO

APPROVED

FOR COMMANDER NAVFAC

ACTIVITY
BID SET SUBMISSION

SATISFACTORY TO DATE 12/30/19

DES	JS	DRW	MT	CHK	JS

<<PM/DM>> RC
BRANCH MANAGER XX
CHIEF ENG/ARCH XXX
<<XXX>> XX

DEPARTMENT OF THE NAVY
NAVAL FACILITIES ENGINEERING COMMAND
NORTHEAST PT.
NAVAL FACILITIES ENGINEERING COMMAND ~ MID-ATLANTIC
NAVAL STATION ~ NORFOLK, VIRGINIA
NAVAL STATION NEWPORT
NEWPORT, RI
DECENTRALIZE STEAM AT BOILER PLANT A6
SECTIONS & DETAILS AND GENERAL NOTES

SCALE: AS NOTED
EPROJECT NO.: 13898.39
CONSTR. CONTR. NO.
NAVFAC DRAWING NO. 12799451
SHEET 21 OF 65

NAVSTA DRAWING NO. 44510-412

S102

DRAWFORM REVISION: 10 MARCH 2009

GENERAL NOTES

1. PROJECT SCOPE: PROVIDE COMPLETE AND OPERATIONAL SYSTEMS AS OUTLINED IN THE CONTRACT DOCUMENTS INCLUDING ALL NECESSARY MATERIAL, LABOR, AND EQUIPMENT.
2. CONSTRUCTION\CONTRACT DOCUMENTS: CONTRACT DOCUMENTS INCLUDING PLANS, DETAILS, AND ONE-LINE DIAGRAMS SHOW THE GENERAL LOCATION AND ARRANGEMENT OF THE WORK. THESE DOCUMENTS ARE DIAGRAMMATIC AND DO NOT SHOW ALL CONNECTORS, FITTINGS, HANGERS, AND ADDITIONAL ELEMENTS WHICH THE CONTRACTOR MUST PROVIDE TO COMPLETE THE SYSTEMS AS OUTLINED IN THE CONTRACT DOCUMENTS. PLANS AND DETAILS DO NOT SHOW ALL INTERFERENCE'S AND CONDITIONS, VISIBLE AND/OR HIDDEN, THAT MAY EXIST, THUS REQUIRING THE CONTRACTOR TO INSPECT AND SURVEY THE PROJECT AREA BEFORE PERFORMING THE WORK. THE CONTRACTOR SHALL VERIFY ALL DIMENSIONS BY FIELD MEASUREMENTS.
3. COORDINATION:
   - A) THE CONTRACTOR SHALL COORDINATE THEIR WORK WITH ALL CONSTRUCTION DOCUMENTS AND OTHER TRADES ASSOCIATED WITH THE PROJECT.
   - B) THE CONTRACTOR SHALL VISIT THE SITE OF WORK AND FAMILIARIZE HIMSELF WITH ALL AVAILABLE INFORMATION CONCERNING THE NATURE OF THE INSTALLATION AND CONDITIONS.
   - C) BEFORE SELECTING MATERIAL, EQUIPMENT AND PROCEEDING WITH WORK, INSPECT AREAS WHERE MATERIAL AND EQUIPMENT ARE TO BE INSTALLED TO INSURE SUITABILITY, AND CHECK NEEDED SPACE FOR PLACEMENT, CLEARANCES AND INTERCONNECTIONS.
   - D) PLANS AND DETAILS DO NOT SHOW ALL INTERFERENCE'S AND CONDITIONS, VISIBLE AND/OR HIDDEN THAT MAY EXIST; THUS, REQUIRING THE CONTRACTOR TO INSPECT AND SURVEY THE SPACE BEFORE PERFORMING THE WORK.
   - E) BEFORE CUTTING OR DRILLING INTO BUILDING ELEMENTS INSPECT AND LAYOUT WORK TO AVOID DAMAGING STRUCTURAL ELEMENTS AND BUILDING UTILITIES.
   - F) ARRANGE FOR CHASES, SLOTS, AND OPENINGS IN OTHER BUILDING COMPONENTS DURING PROGRESS OF CONSTRUCTION, TO ALLOW FOR PROPER SYSTEM INSTALLATIONS.
   - G) COORDINATE THE INSTALLATION OF REQUIRED SUPPORTING DEVICES AND SLEEVES TO BE SET IN POURED IN PLACE CONCRETE AND OTHER STRUCTURAL COMPONENTS, AS THEY ARE CONSTRUCTED.
   - H) SEQUENCE, COORDINATE, AND INTEGRATE INSTALLATIONS OF MATERIALS AND EQUIPMENT FOR EFFICIENT FLOW OF THE WORK. GIVE PARTICULAR ATTENTION TO LARGE EQUIPMENT REQUIRING POSITIONING PRIOR TO CLOSING IN THE BUILDING.
   - I) FAILURE OF THE CONTRACTOR TO ACQUAINT HIMSELF WITH ALL AVAILABLE INFORMATION CONCERNING THE ABOVE CONDITIONS AND NOT PERFORMING PROPER COORDINATION WILL NOT RELIEVE THE CONTRACTOR FROM THE RESPONSIBILITY FOR ESTIMATING THE DIFFICULTIES AND COSTS FOR SUCCESSFULLY PERFORMING THE COMPLETE WORK UNDER THIS PROJECT.
4. SHUTDOWNS: WRITTEN REQUESTS FOR APPROVAL FOR PLANNED SHUTDOWNS OR INTERRUPTION OF OWNER'S UTILITIES, SYSTEMS AND EQUIPMENT SHALL BE MADE 15 DAYS PRIOR TO THE START OF THE REQUESTED SHUTDOWN PERIODS.
5. CODES AND STANDARDS: THE CONTRACTOR SHALL FOLLOW ALL FEDERAL, STATE AND LOCAL CODES THAT HAVE JURISDICTION WHERE THE WORK IS BEING PERFORMED. THROUGHOUT THE CONTRACT DOCUMENTS CERTAIN CODES AND STANDARDS ARE REFERENCED. THE CONTRACTOR SHALL USE THE LATEST VERSIONS OF CODES AND STANDARDS REFERENCED UNLESS OTHERWISE NOTED. IF THE CONTRACTOR IS NOT FAMILIAR WITH THE REFERENCED STANDARD THEY SHALL CONTACT THE OWNER'S REPRESENTATIVE FOR DIRECTION.
6. PERMITS: THE CONTRACTOR SHALL OBTAIN AND PAY FOR ALL REQUIRED PERMITS AND ARRANGE FOR ALL REQUIRED INSPECTIONS IN ACCORDANCE WITH FEDERAL, STATE AND LOCAL GOVERNING AUTHORITIES.
7. WORKMAN: ALL WORK SHALL BE DONE WITH LICENSED WORKMEN IN ACCORDANCE WITH FEDERAL, STATE AND LOCAL GOVERNING AUTHORITIES CODES AND REGULATIONS.
8. SUBMITTALS: THE CONTRACTOR SHALL PROVIDE SUBMITTALS FOR ALL EQUIPMENT AND MATERIALS BEING PROVIDED BEFORE SUCH EQUIPMENT AND MATERIALS ARE PURCHASED AND INSTALLED. THE SUBMITTALS SHALL BE REVIEWED AND RETURNED BY THE OWNER'S REPRESENTATIVE WITH APPROPRIATE COMMENTS. SUBMITTALS SHALL BE SUBMITTED ELECTRONICALLY IN PDF FORMAT AND WILL BE RETURNED WITH COMMENTS TO THE CONTRACTOR IN PDF FORMAT.
9. AS-BUILT DOCUMENTATION: THE CONTRACTOR SHALL PROVIDE ONE MARK-UP SET OF CONSTRUCTION DOCUMENTS SHOWING FINAL AS-BUILT CONDITIONS. DOCUMENTS SHALL CLEARLY SHOW THE CHANGES MADE TO THE INSTALLED SYSTEMS.
10. EQUIPMENT WARRANTIES, MAINTENANCE MANUALS AND INSTALLATION MANUALS: TURN OVER TO THE OWNER ALL MANUFACTURERS' WARRANTIES, MAINTENANCE MANUALS, AND INSTALLATION MANUALS FOR EQUIPMENT AND MATERIALS PROVIDED.
11. PHOTOGRAPHS: PHOTOGRAPHS ARE PROVIDED TO SHOW CURRENT CONDITION OF BUILDING SYSTEMS TO ASSIST THE CONTRACTOR. PHOTOGRAPHS DO NOT SHOW ALL AREAS OF THE BUILDING OR ALL SYSTEM CONDITIONS, THUS REQUIRING THE CONTRACTOR TO VISIT THE SITE BEFORE PERFORMING WORK. PHOTOGRAPHS ARE NOT INTENDED TO SHOW SCOPE OF WORK. PLANS, NOTES, SPECIFICATIONS AND OTHER BID DOCUMENTS INDICATE SCOPE OF WORK.
12. TERMINOLOGY:
   - A) THE TERM "INDICATED" SHALL MEAN, "AS SHOWN ON CONTRACT DOCUMENTS (SPECIFICATIONS, DRAWINGS, AND RELATED ATTACHMENTS)".
   - B) THE TERM "PROVIDE" SHALL MEAN, "TO FURNISH, INSTALL, AND CONNECT COMPLETELY".
   - C) THE TERM "COORDINATE" SHALL MEAN ONE OR MORE OF THE FOLLOWING: "TO MANAGE, INTERFACE, COMMUNICATE, MAKE ARRANGEMENT, BRING INTO ORDER, ADMINISTER AND HANDLE COMPLETELY".
   - D) THE TERM "INTERIOR" IS AN INTERIOR LOCATION WHERE ITS ENVIRONMENT IS HEATED AND/OR AIR CONDITIONED AND NOT SUBJECT TO OUTSIDE WEATHER CONDITIONS.
   - E) THE TERM "EXTERIOR" IS ALL LOCATIONS, WHICH ARE NOT INTERIOR, OR UNDERGROUND.
   - F) THE TERM "INTERIOR FINISHED SPACE" IS INTERIOR SPACES, WHICH ARE USED FOR OFFICES, CORRIDORS, LOBBIES, TOILETS, STORAGE AND FILING ROOMS, LOUNGES, MECHANICAL ROOMS, ELECTRICAL ROOMS, ETC.
13. DEMOLITION: DEMOLITION OF INDICATED ITEMS INCLUDES THE REMOVAL AND PROPER DISPOSAL OF THOSE ITEMS AND ALL ASSOCIATED PIPING, DUCTWORK, WIRING AND HANGERS. ELECTRICAL BRANCH, CONTROL, TELEPHONE, AND ALARM WIRING SHALL BE REMOVED BACK TO PANELBOARDS OR RELATED SYSTEM PANELS OR BACKBOARDS.
14. EQUIPMENT AND MATERIAL INSTALLATIONS:
   - A) ALL EQUIPMENT AND MATERIALS SHALL BE LABELED AND LISTED, AND INSTALLED IN ACCORDANCE WITH THEIR LISTING AND MANUFACTURER'S REQUIREMENTS.
   - B) WHEN A MANUFACTURER RECOMMENDS AN OPTION OR ACCESSORY ITEM FOR THE INSTALLED CONDITION, OPERATION, OR ENVIRONMENT THAT IS TO BE EXPERIENCED, SUCH ITEM SHALL BE SUPPLIED AT NO ADDITIONAL COST TO THE OWNER.
   - C) IF AN EQUIPMENT MANUFACTURER REQUIRES LARGER CAPACITY, CIRCUITRY AND/OR EQUIPMENT, THE CONTRACTOR SHALL PROVIDE SUCH CAPACITY AND/OR EQUIPMENT UNDER HIS CONTRACT AT NO ADDITIONAL COST TO THE OWNER.
   - D) LOCATE ALL EQUIPMENT, WHICH REQUIRES SERVICING IN FULLY ACCESSIBLE POSITIONS. IF REQUIRED FOR BETTER ACCESSIBILITY, FURNISH ACCESS DOORS FOR THAT PURPOSE.
   - E) MINOR DEVIATIONS FROM DRAWINGS MAY BE MADE TO ALLOW FOR BETTER ACCESSIBILITY.
   - F) ALL WORK IN INTERIOR FINISHED SPACES SHALL BE CONCEALED BEHIND WALLS, ABOVE CEILINGS OR HUNG CEILINGS, OR UNDER THE FLOOR. PROVIDE ALL NECESSARY CUTTING, PATCHING, REPAINTING AND/OR REPLACEMENT OF CEILING TILES AS REQUIRED TO PERFORM WORK.
   - G) INSTALL SYSTEMS, MATERIALS, AND EQUIPMENT TO CONFORM WITH APPROVED SUBMITTAL DATA, INCLUDING COORDINATION DRAWINGS (IF REQUIRED), TO GREATEST EXTENT POSSIBLE. CONFORM TO ARRANGEMENTS INDICATED BY THE CONTRACT DOCUMENTS, RECOGNIZING THAT PORTIONS OF THE WORK ARE SHOWN ONLY IN DIAGRAMMATIC FORM. WHERE COORDINATION REQUIREMENTS CONFLICT WITH INDIVIDUAL SYSTEM REQUIREMENTS, REFER CONFLICT TO THE ARCHITECT/ENGINEER.
   - H) INSTALL SYSTEMS, MATERIALS, AND EQUIPMENT LEVEL AND PLUMB, PARALLEL AND PERPENDICULAR TO OTHER BUILDING SYSTEMS AND COMPONENTS, WHERE INSTALLED EXPOSED IN FINISHED SPACES
   - I) INSTALL EQUIPMENT TO FACILITATE SERVICING, MAINTENANCE, AND REPAIR OR REPLACEMENT OF EQUIPMENT COMPONENTS. AS MUCH AS PRACTICAL, CONNECT EQUIPMENT FOR EASE OF DISCONNECTING, WITH MINIMUM OF INTERFERENCE WITH OTHER INSTALLATIONS.
   - J) INSTALL SYSTEMS, MATERIALS, AND EQUIPMENT GIVING RIGHT OF WAY PRIORITY TO SYSTEMS REQUIRED TO BE INSTALLED AT A SPECIFIED SLOPE.
15. SERVICE LABELING: LABEL EQUIPMENT, PIPING, CONDUITS, INCLUDING FANS, AIR HANDLERS, TERMINAL UNITS, PANELBOARDS, ETC. WITH LABELS MADE OF SELF-STICKING, PLASTIC FILM DESIGNED FOR PERMANENT INSTALLATION. LABELS SHALL MATCH DESIGNATIONS AS INDICATED ON CONTRACT DRAWINGS. IDENTIFY PIPING AND CONDUITS IN ACCORDANCE WITH OSHA 29 CFR 1910.144, EXCEPT THAT LABELS OR TAPES MAY BE USED IN LIEU OF PAINTING OR STENCILING. SPACING OF IDENTIFICATION MARKING ON RUNS SHALL NOT EXCEED 50 FEET. MATERIALS FOR LABELS AND TAPES SHALL CONFORM TO CID A-A-1689, AND SHALL BE GENERAL PURPOSE TYPE AND COLOR CLASS.
   - A) IN ADDITION IDENTIFY SERVICES AS INDICATED BELOW:
   - B) EACH POINT OF ENTRY AND EXIT OF PIPE OR CONDUITS PASSING THROUGH WALLS.
   - C) EACH CHANGE IN DIRECTION, I.E., ELBOWS, TEES.
   - D) IN CONGESTED OR HIDDEN AREAS AND AT ALL ACCESS PANELS AT EACH POINT REQUIRED TO CLARIFY SERVICE OR INDICATED HAZARD.
   - E) IN LONG STRAIGHT RUNS, LOCATE LABELS AT DISTANCES WITHIN EYESIGHT OF EACH OTHER NOT TO EXCEED 50 FEET. ALL LABELS SHALL BE VISIBLE AND LEGIBLE FROM THE PRIMARY SERVICE AND OPERATING AREA.
17. MANUFACTURER'S NAMEPLATES: EACH ITEM OF EQUIPMENT SHALL HAVE A NAMEPLATE BEARING THE MANUFACTURER'S NAME, ADDRESS, MODEL NUMBER, AND SERIAL NUMBER SECURELY AFFIXED IN A CONSPICUOUS PLACE; THE NAMEPLATE OF THE DISTRIBUTING AGENT WILL NOT BE ACCEPTABLE.
18. POSTED OPERATING INSTRUCTIONS: PROVIDE FOR EACH SYSTEM AND PRINCIPAL ITEM OF EQUIPMENT AS SPECIFIED FOR USE BY OPERATION AND MAINTENANCE PERSONNEL. PRINT OR ENGRAVE OPERATING INSTRUCTIONS AND FRAME UNDER GLASS OR IN APPROVED LAMINATED PLASTIC. POST INSTRUCTIONS WHERE DIRECTED. FOR OPERATING INSTRUCTIONS EXPOSED TO THE WEATHER, PROVIDE WEATHER-RESISTANT MATERIALS OR WEATHERPROOF ENCLOSURES. OPERATING INSTRUCTIONS SHALL NOT FADE WHEN EXPOSED TO SUNLIGHT AND SHALL BE SECURED TO PREVENT EASY REMOVAL OR PEELING. THE OPERATING INSTRUCTIONS SHALL INCLUDE THE FOLLOWING:
   - A) WIRING DIAGRAMS, CONTROL DIAGRAMS, AND CONTROL SEQUENCE FOR EACH PRINCIPAL SYSTEM AND ITEM OF EQUIPMENT.
   - B) START UP, PROPER ADJUSTMENT, OPERATING, LUBRICATION, AND SHUTDOWN PROCEDURES.
   - C) SAFETY PRECAUTIONS.
   - D) THE PROCEDURE IN THE EVENT OF EQUIPMENT FAILURE.
   - E) OTHER ITEMS OF INSTRUCTION AS RECOMMENDED BY THE MANUFACTURER OF EACH SYSTEM OR ITEM OF EQUIPMENT.
19. WARNING SIGNS: PROVIDE WARNING SIGNS FOR THE ENCLOSURES OF ELECTRICAL EQUIPMENT INCLUDING SUBSTATIONS, PAD-MOUNTED TRANSFORMERS, PAD-MOUNTED SWITCHES, GENERATORS, AND SWITCHGEAR HAVING A NOMINAL RATING EXCEEDING 600 VOLTS.
20. EXTERIOR FERROUS MATERIALS: ALL EXTERIOR FERROUS MATERIALS SHALL BE PROTECTED FROM CORROSION BY ONE OF THE FOLLOWING METHODS:
   - A) COVERED WITH A NON-FERROUS OR NON-CORRODING MATERIAL.
   - B) MATERIALS THAT ARE INSULATED ON THE EXTERIOR.
   - C) MATERIALS THAT ARE GALVANIZED.
   - D) MATERIALS THAT ARE PAINTED. EXTERIOR PAINTING SHALL CONSIST OF A BASE COAT OF AN APPROPRIATE PRIMER AND TWO COATS OF FINAL PAINT. FINAL PAINT COLOR SHALL BE SELECTED BY THE OWNER'S REPRESENTATIVE.
21. CONSTRUCTION PHASING:
   - A) CONSTRUCTION SHALL BE PHASED TO MAINTAIN DOMESTIC HOT WATER SUPPLY
   - B) INSTALL REPLACEMENT DOMESTIC HOT WATER HEATERS BEFORE REMOVING EXISTING STEAM POWERED HEATERS AND THE B23A STEAM SYSTEM.

ABBREVIATIONS

% – PERCENT
(TYP.) – TYPICAL FOR OTHER LOCATIONS
Ø or DIA – DIAMETER
° or DEG – DEGREE
' – FEET
" – INCHES
A – AMPERES
A – COMPRESSED AIR PIPING
ABV – ABOVE
AC – ALTERNATING CURRENT
ACC – AIR-COOLED CONDENSER
AFF – ABOVE FINISHED FLOOR
AHU – AIR HANDLING UNIT
AMP – AMPERE
AS – AIR SEPARATOR
ATM – ATMOSPHERE
AWG – AMERICAN WIRE GAUGE
BHP – BRAKE HORSEPOWER
BKBD – BACKBOARD
BLW – BELOW
BTU – BRITISH THERMAL UNIT
C – CONDUIT RACEWWAY
CFM – CUBIC FEET PER MINUTE
CI – CAST IRON
CKT – CIRCUIT
CLG – CEILING
CV – COEFFICIENT, VALVE FLOW
CW – DOMESTIC COLD WATER
DB – DECIBEL
DB – DRY-BULB
DC – DIRECT CURRENT
DCW – DOMESTIC COLD WATER
DHW – DOMESTIC HOT WATER
DHC – DOMESTIC HOT WATER RECIRC
DF – DRINKING FOUNTAIN
DL – REFRIGERANT DISCHARGE
DLUG – DELUGE PIPING
DN – DOWN
DS – DRY STANDPIPE PIPING
DWG – DRAWING
EXG – EXISTING
EAT – ENTERING AIR TEMPERATURE
EF – EXHAUST FAN
EL – ELEVATION
EMT – ELECTRICAL METALLIC TUBING
ENT – ENTERING
EQPMT – EQUIPMENT
EWH – ELECTRIC WATER HEATER
EXG – EXISTING
F – FAHRENHEIT
FLR – FLOOR
FP – FIRE PROTECTION
FPM – FEET PER MINUTE
FPS – FEET PER SECOND
FS – FLOW SWITCH
FT – FEET
FU – FUSED
G – LOW PRESSURE NATURAL GAS
GA – GAUGE
GAL – GALLON(S)
GEC – GROUNDING ELECTRODE CONDUCTOR
GFCI – GROUND FAULT CIRCUIT INTERRUPTER
GFI – GROUND FAULT INTERRUPTER
GFP – GROUND FAULT PROTECTION
GMP – GLYCOL MAKE-UP PACKAGE
GPH – GALLONS PER HOUR
GPM – GALLONS PER MINUTE
GRS – SANITARY GREASE
GV – GAS VENT PIPING
HD – HEAD
HGT – HEIGHT
HOA – HAND OFF AUTO
HOR – HORIZONTAL
HP – HORSEPOWER
HR – HOUR(S)
HWR – HOT WATER RETURN
HWS – HOT WATER SUPPLY
HWM – HOT WATER MAKE UP
HZ – HERTZ FREQUENCY
ID – INSIDE DIAMETER
IMC – INTERMEDIATE METAL CONDUIT
IPS – IRON PIPE SIZE
K – THERMAL CONDUCTIVITY
KVA – KILO VOLT-AMPERES
KW – KILOWATT(S)
LAT – LEAVING AIR TEMPERATURE
LAV – LAVATORY
LBS – POUNDS
LTG – LIGHTING
MAX – MAXIMUM
MIN – MINIMUM
MW – MAKEUP WATER
N/A – NOT APPLICABLE
N2 – MEDICAL GAS NITROGEN
N2O – MEDICAL GAS NITROUS OXIDE PIPING
NC – NOISE CRITERIA
NC – NORMALLY CLOSED
NEC – NATIONAL ELECTRIC CODE
NF – NON-FUSED
NFWH – NON-FREEZE WALL HYDRANT
NO – NORMALLY OPEN
NO – NUMBER
NTS – NOT TO SCALE
O2 – MEDICAL GAS OXYGEN
OA – OUTSIDE AIR
OD – STORM OVERFLOW
OS&Y – OUTSIDE STEM & YOKE
P – POLE
PD – PRESSURE DROP OR DIFFERENCE
PH – PHASE
PIV – POST INDICATING VALVE
PROP – PROPANE
PROPV – PROPANE VENT
PSI – POUNDS PER SQUARE INCH
PSIA – PSI ABSOLUTE
PSIG – PSI GAUGE
PWR – POWER
QTY – QUANTITY
R12 – REFRIGERANT (12,22,ETC.)
RA – RETURN AIR
RCVR – RECEIVER
RECIRC – RECIRCULATE
RECPT – RECEPTACLE
RH – RELATIVE HUMIDITY
RM – ROOM
RPDA – REDUCE PRESSURE PRINCIPLE
RPM – REVOLUTIONS PER MINUTE
RSC – RIGID STEEL CONDUIT
RTU – ROOF TOP UNIT
SA – SUPPLY AIR
SAN – SANITARY
SEC – SECOND
SF – SAFETY FACTOR
SF – SQUARE FEET
SHR – SHOWER
SK – SINK
SP – STATIC PRESSURE
SPEC – SPECIFICATIONS
SPLY – SUPPLY
SS – SERVICE SINK
STD – STANDARD
SUCT – SUCTION
TEMP – TEMPERATURE
T-STAT – THERMOSTAT
TYP – TYPICAL
UH – UNIT HEATER
UR – URINAL
V – VOLT
VA – VOLT AMPERE
VAC – VOLTS-ALTERNATING CURRENT
VAV – VARIABLE AIR VOLUME
VEL – VELOCITY
VENT – VENTILATION
VERT – VERTICAL
VL – REFRIGERANT VAPORCINE
VOL – VOLUME
VTR – VENT THRU ROOF
W – WASTE
W – WATT(S)
WB – WET BULB
WC – WATER CLOSET
WCO – WALL CLEANOUT
WP – WEATHERPROOF
WS – WET STANDPIPE PIPING

GENERAL SYMBOLS

A / A8 — PLAN TITLES
SCALE: 1/8" = 1'-0" (0, 4', 8', 16')

A / A8 — PHOTO MARKER ARROW INDICATES DIRECTION OF VIEW
NORTH ARROW
POINT OF CONNECTION
A — A — MATCH LINE
ITEMS TO BE DEMOLISHED

PLUMBING (DOM) SYMBOL LEGEND

DOMESTIC COLD WATER
DOMESTIC HOT WATER
DOMESTIC HOT WATER RECIRC
ELBOW UP
ELBOW DOWN
TEE
HOSE BIBB
BALL VALVE
CHECK VALVE
DRAIN VALVE
RELIEF VALVE
ENDCAP
FLANGE
UNION

SYM	DESCRIPTION	DATE	APPR

NAVFAC

AMES & WHITAKER Architects

BID SET SUBMISSION
12/30/19

DES	ERK	DRW	GJG	CHK	ERK
<<PM/DM>>				RC	
BRANCH MANAGER				XX	
CHIEF ENG/ARCH				XXX	
<<XXX>>				XX	

DEPARTMENT OF THE NAVY
NAVAL FACILITIES ENGINEERING COMMAND
NORTHEAST PT
NAVAL FACILITIES ENGINEERING COMMAND ~ MID-ATLANTIC
NAVAL STATION – NORFOLK, VIRGINIA
NAVAL STATION NEWPORT
NEWPORT, RI
DECENTRALIZE STEAM AT BOILER PLANT A6
PLUMING NOTES & SYMBOLS

SCALE: AS NOTED
EPROJECT NO.: 1389839
CONSTR. CONTR. NO.
NAVFAC DRAWING NO. 12799452
SHEET 22 OF 65
NAVSTA DRAWING NO. 44511-412
P001
DRAWFORM REVISION: 10 MARCH 2009

B23A DEMO WORK ITEMS

1. REMOVE (2) STEAM HOT WATER HEATERS AND ALL ASSOCIATED PIPING, CONTROLS & COMPONENTS. ENSURE (3) PROPOSED WATER HEATERS, SHOWN ON P100, ARE IN SERVICE BEFORE SHUTDOWN OF EXISTING STEAM HOT WATER HEATERS.
2. REMOVE CW SUPPLY TO EXISTING CHECK VALVE.
3. REMOVE HW RETURN BACK TO CHECK VALVE & ISOLATION VALVE.
4. RELOCATE MEDICAL VACUUM UNIT TO PROPOSED TEMPORARY LOCATION. PROVIDE TEMPORARY MOUNTING PLATFORM. REMOVE MEDVAC SUPPLY AND EXHAUST PIPING UP TO UNIT ACCESSORIES.

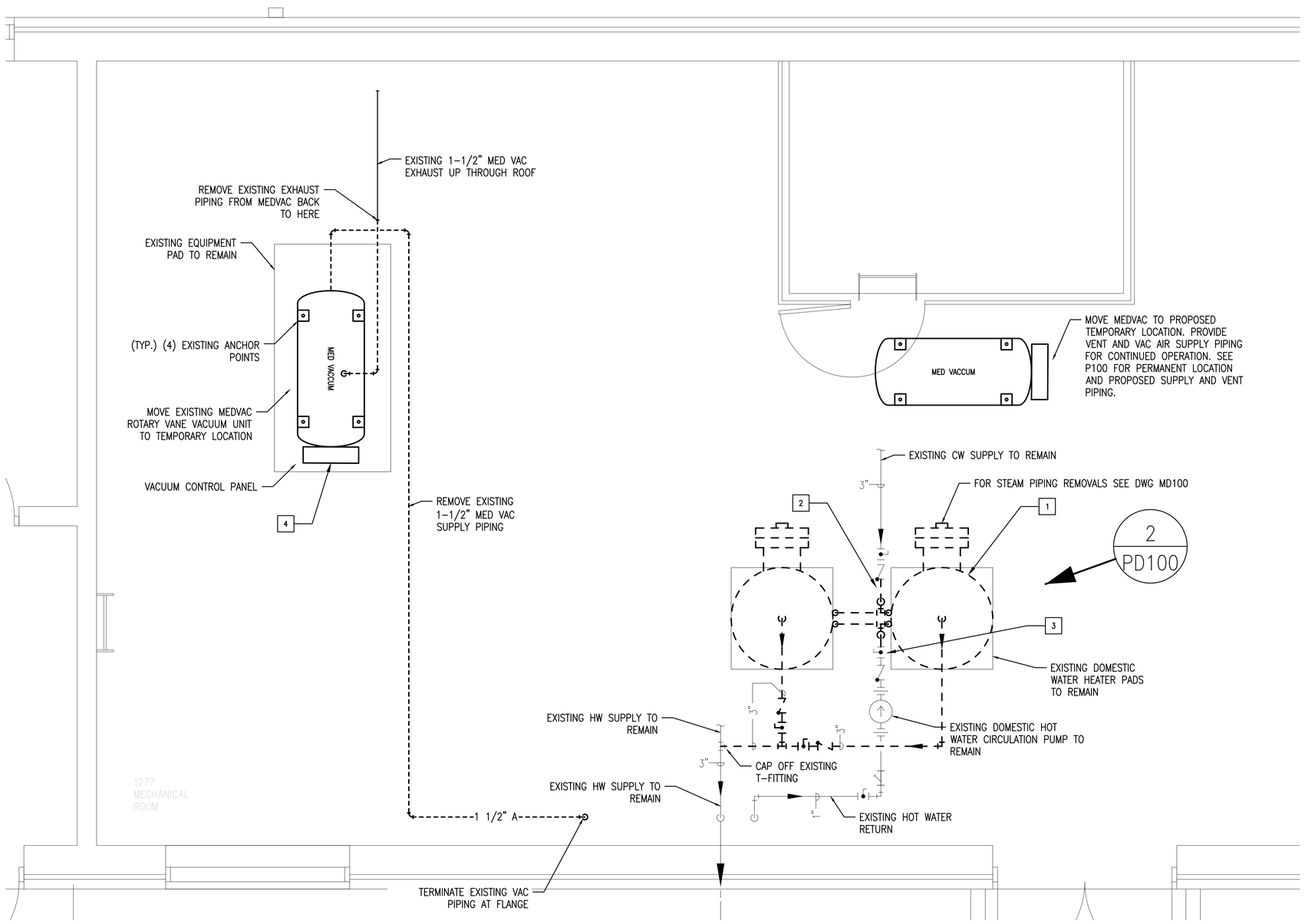

1 PD100 BUILDING 23A PARTIAL DEMOLITION PLAN

SCALE: 1/2" = 1'-0" 0 1' 2' 4'

2 PD100 BUILDING 23A REMOVALS STEAM WATER HEATERS

NO SCALE

BUILDING 23A

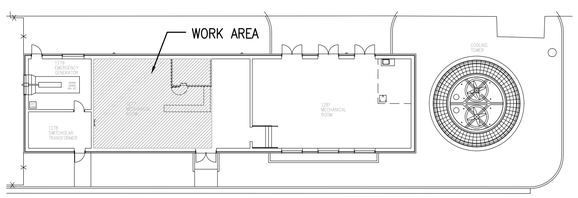

KEY PLAN

NAVSTA DRAWING NO. 44512-412

APPR	DATE	DESCRIPTION	SYM

NAVFAC

AMES & WHITAKER Architects

BID SET SUBMISSION

12/30/19

DES KWK	DRW GJG	CHK KWK	
<<PM/DM>>	RC		
BRANCH MANAGER	XX		
CHIEF ENG/ARCH	XXX		
<<XXX>>	XX		

DEPARTMENT OF THE NAVY
NAVAL FACILITIES ENGINEERING COMMAND
NORTHEAST PT
NAVAL FACILITIES ENGINEERING COMMAND ~ MID-ATLANTIC
NAVAL STATION ~ NORFOLK, VIRGINIA
NAVAL STATION NEWPORT
NEWPORT, RI

DECENTRALIZE STEAM AT BOILER PLANT A6

B23A PLUMBING DEMOLITION PLAN

SCALE: AS NOTED

EPROJECT NO.: 1389839

CONSTR. CONTR. NO.

NAVFAC DRAWING NO. 12799453

SHEET 23 OF 65

PD100

DRAWFORM REVISION: 10 MARCH 2009

B23A INSTALL WORK ITEMS (XX)

1. INSTALL (3) DOMESTIC HOT WATER HEATERS
2. CONNECT DOMESTIC HW SUPPLY TO EXISTING 3" SUPPLY HEADER
3. CONNECT CW SUPPLY FROM EXISTING CHECK VALVE TO HOT WATER HEATERS
4. CONNECT EXISTING CIRCULATION PUMP OUTPUT TO RETURN HEADERS FOR HOT WATER HEATERS
5. GAS PIPING: PROVIDE GAS CONNECTIONS TO EACH HOT WATER HEATER. SEE GAS PIPING RISER ON SHEET M600 FOR ADDITIONAL REQUIREMENTS.
6. PROVIDE CONDENSATE LINES TO FLOOR DRAIN
7. VENT EXHAUST AND INTAKE UP THROUGH ROOF.
8. MOVE MEDICAL VACUUM UNIT FROM TEMPORARY LOCATION TO LOCATION SHOWN. EXTEND EXHAUST AND VACUUM SUPPLY PIPING TO LOCATION SHOWN. PROVIDE CONCRETE EQUIPMENT PAD.
9. PROVIDE CONDENSATE PIPING TO EXISTING FLOOR DRAIN

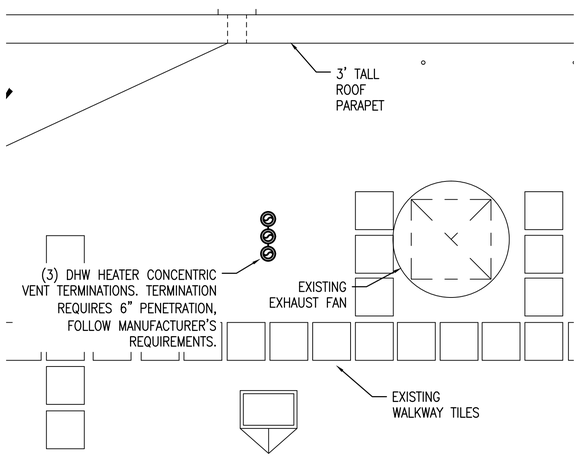

BUILDING 23A DOMESTIC HW ROOF PARTIAL PLAN

2 / P100

SCALE: 1/4" = 1'-0" (0, 2', 4', 8')

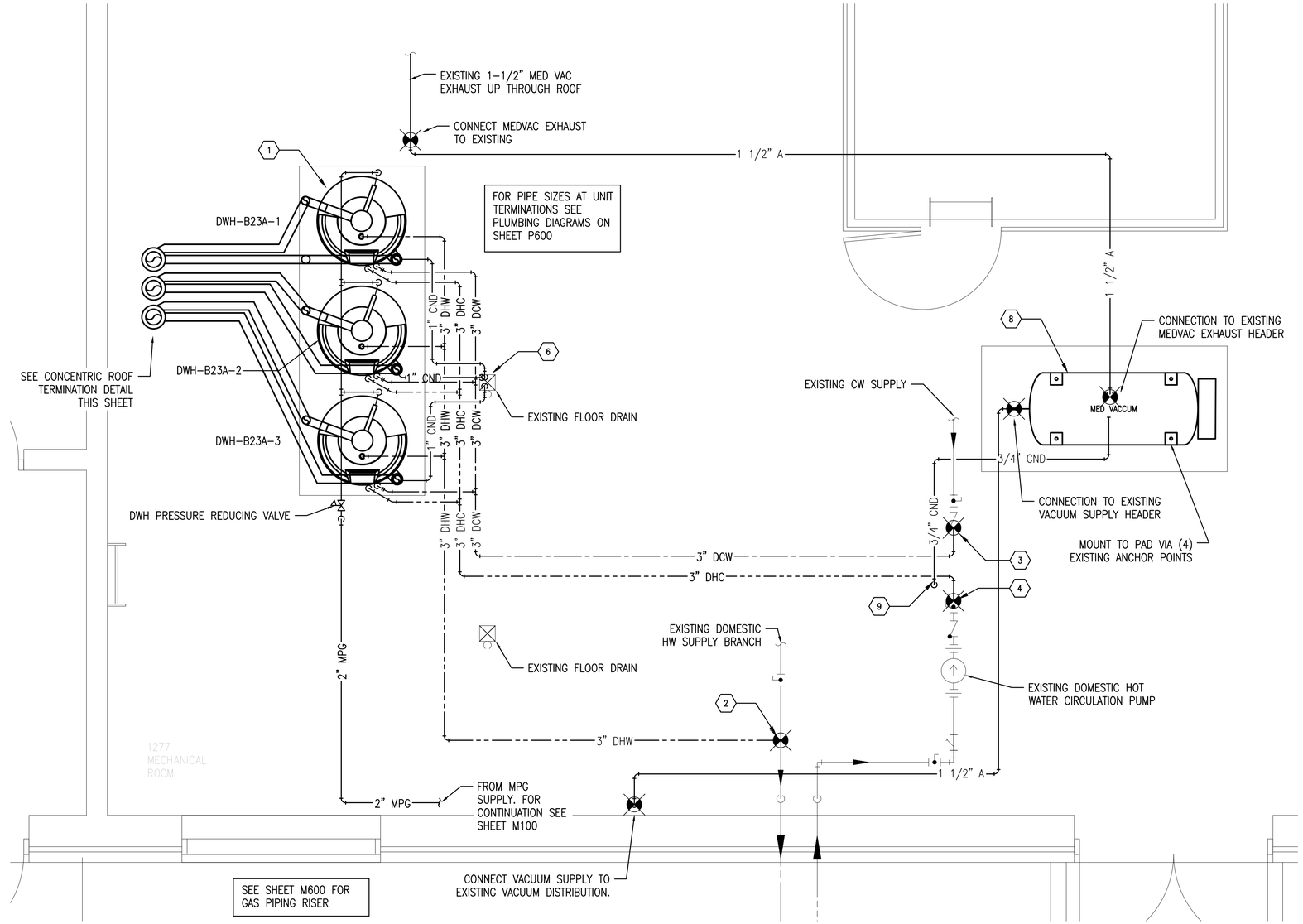

BUILDING 23A DOMESTIC HW PARTIAL FLOOR PLAN

1 / P100

SCALE: 1/2" = 1'-0" (0, 1', 2', 4')

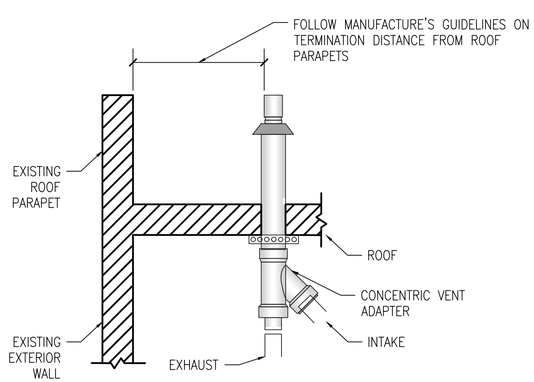

CONCENTRIC ROOF TERMINATION DETAIL

3 / P100

NO SCALE

BUILDING 23A

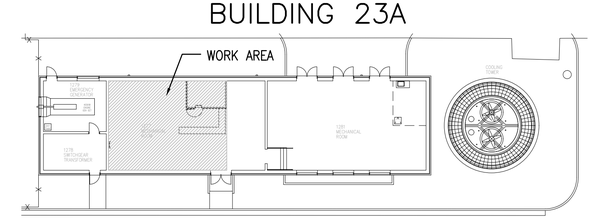

KEY PLAN

NAVSTA DRAWING NO. 44513-412

SYM	DESCRIPTION	DATE	APPR

NAVFAC

BID SET SUBMISSION

12/30/19

DES KWK	DRW GJG	CHK KWK	
<<PM/DM>>	RC		
BRANCH MANAGER	XX		
CHIEF ENG/ARCH	XXX		
<<XXX>>	XX		

DEPARTMENT OF THE NAVY
NAVAL FACILITIES ENGINEERING COMMAND
NORTHEAST IPT
NAVAL FACILITIES ENGINEERING COMMAND ~ MID-ATLANTIC
NAVAL STATION - NORFOLK, VIRGINIA
NAVAL STATION NEWPORT
NEWPORT, RI

DECENTRALIZE STEAM AT BOILER PLANT A6

B23A PLUMBING PLAN

AMES & WHITAKER Architects

SCALE: AS NOTED
EPROJECT NO.: 1389839
CONSTR. CONTR. NO.
NAVFAC DRAWING NO. 12799454
SHEET 24 OF 65

P100

DRAWFORM REVISION: 10 MARCH 2009

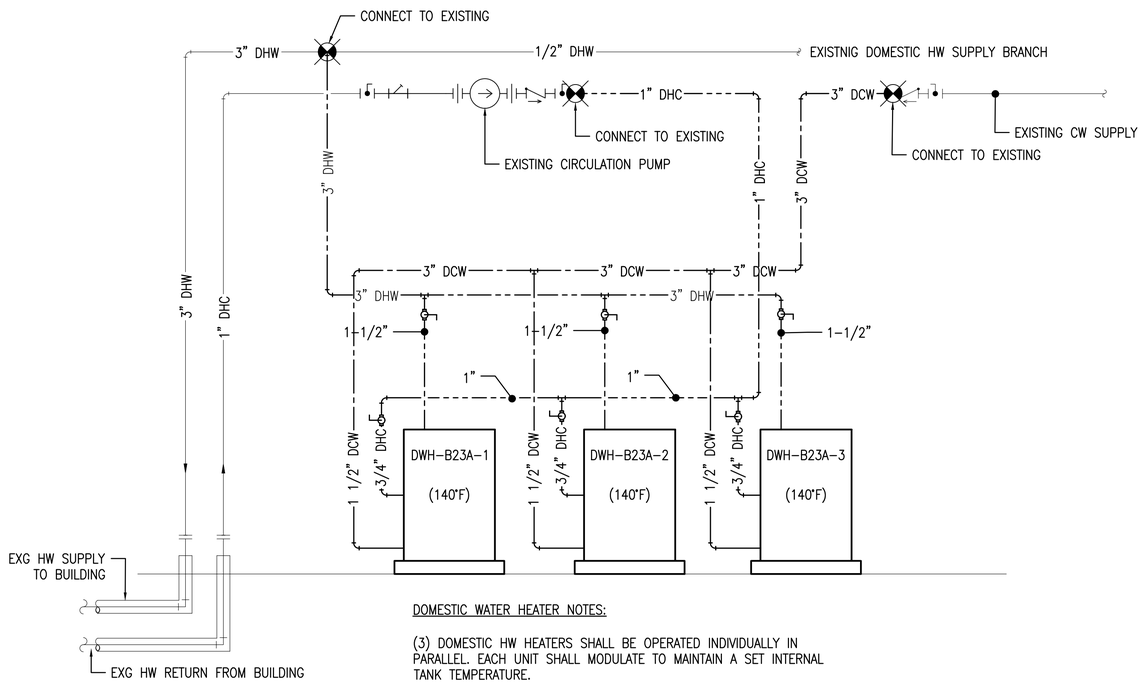

DOMESTIC WATER HEATER NOTES:

(3) DOMESTIC HW HEATERS SHALL BE OPERATED INDIVIDUALLY IN PARALLEL. EACH UNIT SHALL MODULATE TO MAINTAIN A SET INTERNAL TANK TEMPERATURE.

EACH WATER HEATER SHALL HAVE A DISPLAY SCREEN TO DISPLAY SETPOINT TEMPERATURE, TANK TEMPERATURE, STATUS, AND ANY FAULTS PRESENT.

BUILDING 23A SCHEMATIC FLOW DIAGRAM – DOMESTIC HW SYSTEM

1 / P600

NO SCALE

DOMESTIC WATER HEATER SCHEDULE			
DESIGNATION	DWH-B23A-1	DWH-B23A-2	DWH-B23A-3
SERVICE	DOMESTIC HOT WATER	DOMESTIC HOT WATER	DOMESTIC HOT WATER
DESCRIPTION	COMMERCIAL MODULATING CONDENSING GAS WATER HEATER	COMMERCIAL MODULATING CONDENSING GAS WATER HEATER	COMMERCIAL MODULATING CONDENSING GAS WATER HEATER
GAS INPUT (MBH)	399.9	399.9	399.9
RECOVERY AT A 100°F RISE (GPH)	460	460	460
STORAGE CPACITY (GAL)	119	119	119
THERMAL EFFICIENCY (%)	95	95	95
RATED OPERATING PRESSURE (PSIG)	160	160	160
ASME LABELED	PROVIDE	PROVIDE	PROVIDE
VENT SIZE, DIA. (IN), NOTE 1	4	4	4
VENT MATERIAL, NOTE 1	SCHEDULE 40 CPVC (ASTM F441)	SCHEDULE 40 CPVC (ASTM F441)	SCHEDULE 40 CPVC (ASTM F441)
AIR INTAKE SIZE, DIA. (IN), NOTE 1	4	4	4
AIR INTAKE MATERIAL, NOTE 1	SCHEDULE 40 CPVC (ASTM F441)	SCHEDULE 40 CPVC (ASTM F441)	SCHEDULE 40 CPVC (ASTM F441)
CONDENSATE NUETRALIZER KIT	PROVIDE	PROVIDE	PROVIDE
ACCESSORIES	COMMON VENT KIT, NOTE 2	COMMON VENT KIT, NOTE 2	COMMON VENT KIT, NOTE 2
CONCRET PAD	PROVIDE	PROVIDE	PROVIDE
LOCAL ELECTRICAL DISCONNECT	PROVIDE	PROVIDE	PROVIDE
ELECTRICAL (V/PH/HZ)	120/1/60	120/1/60	120/1/60
ELECTRICAL MCA (AMPS)	10	10	10
ELECTRICAL MOCP (AMPS)	15	15	15
DIMENSIONS, DIA X HEIGHT (IN)	33 X 76	33 X 76	33 X 76
WEIGHT (LBS)	855	855	855

NOTES:

1. ALL INTAKE AND VENT SYSTEM MATERIALS, SYSTEMS & MANUFACTURERS MUST BE COMPATIBLE AND LISTED TO BE USED WITH HEATER. INTAKE AND VENT SYSTEM DESIGN AND SIZING SHALL BE BASED ON MANUFACTURER'S INSTALLATION REQUIRMENTS.
2. SEE SPECIFICATIONS FOR ADDITIONAL WATER HEATER REQUIREMENTS.

SYM	DESCRIPTION	DATE	APPR

NAVFAC

AMES & WHITAKER Architects

BID SET SUBMISSION

12/30/19

DES KWK | DRW GJG | CHK KWK

<<PM/DM>> RC

BRANCH MANAGER XX

CHIEF ENG/ARCH XXX

<<XXX>> XX

DEPARTMENT OF THE NAVY
NAVAL FACILITIES ENGINEERING COMMAND
NORTHEAST IPT
NAVAL FACILITIES ENGINEERING COMMAND ~ MID-ATLANTIC
NAVAL STATION – NORFOLK, VIRGINIA
NAVAL STATION NEWPORT
NEWPORT, RI
DECENTRALIZE STEAM AT BOILER PLANT A6
PLUMBING PIPING DIAGRAMS

SCALE: AS NOTED

EPROJECT NO.: 1389839

CONSTR. CONTR. NO.

NAVFAC DRAWING NO. 12799455

SHEET 25 OF 65

NAVSTA DRAWING NO. 44514–412

P600

DRAWFORM REVISION: 10 MARCH 2009

GENERAL NOTES

1. PROJECT SCOPE: PROVIDE COMPLETE AND OPERATIONAL SYSTEMS AS OUTLINED IN THE CONTRACT DOCUMENTS INCLUDING ALL NECESSARY MATERIAL, LABOR, AND EQUIPMENT.
2. CONSTRUCTION\CONTRACT DOCUMENTS: CONTRACT DOCUMENTS INCLUDING PLANS, DETAILS, AND ONE–LINE DIAGRAMS SHOW THE GENERAL LOCATION AND ARRANGEMENT OF THE WORK. THESE DOCUMENTS ARE DIAGRAMMATIC AND DO NOT SHOW ALL CONNECTORS, FITTINGS, HANGERS, AND ADDITIONAL ELEMENTS WHICH THE CONTRACTOR MUST PROVIDE TO COMPLETE THE SYSTEMS AS OUTLINED IN THE CONTRACT DOCUMENTS. PLANS AND DETAILS DO NOT SHOW ALL INTERFERENCE'S AND CONDITIONS, VISIBLE AND/OR HIDDEN, THAT MAY EXIST, THUS REQUIRING THE CONTRACTOR TO INSPECT AND SURVEY THE PROJECT AREA BEFORE PERFORMING THE WORK. THE CONTRACTOR SHALL VERIFY ALL DIMENSIONS BY FIELD MEASUREMENTS.
3. COORDINATION:
   - A) THE CONTRACTOR SHALL COORDINATE THEIR WORK WITH ALL CONSTRUCTION DOCUMENTS AND OTHER TRADES ASSOCIATED WITH THE PROJECT.
   - B) THE CONTRACTOR SHALL VISIT THE SITE OF WORK AND FAMILIARIZE HIMSELF WITH ALL AVAILABLE INFORMATION CONCERNING THE NATURE OF THE INSTALLATION AND CONDITIONS.
   - C) BEFORE SELECTING MATERIAL, EQUIPMENT AND PROCEEDING WITH WORK, INSPECT AREAS WHERE MATERIAL AND EQUIPMENT ARE TO BE INSTALLED TO INSURE SUITABILITY, AND CHECK NEEDED SPACE FOR PLACEMENT, CLEARANCES AND INTERCONNECTIONS.
   - D) PLANS AND DETAILS DO NOT SHOW ALL INTERFERENCE'S AND CONDITIONS, VISIBLE AND/OR HIDDEN THAT MAY EXIST; THUS, REQUIRING THE CONTRACTOR TO INSPECT AND SURVEY THE SPACE BEFORE PERFORMING THE WORK.
   - E) BEFORE CUTTING OR DRILLING INTO BUILDING ELEMENTS INSPECT AND LAYOUT WORK TO AVOID DAMAGING STRUCTURAL ELEMENTS AND BUILDING UTILITIES.
   - F) ARRANGE FOR CHASES, SLOTS, AND OPENINGS IN OTHER BUILDING COMPONENTS DURING PROGRESS OF CONSTRUCTION, TO ALLOW FOR PROPER SYSTEM INSTALLATIONS.
   - G) COORDINATE THE INSTALLATION OF REQUIRED SUPPORTING DEVICES AND SLEEVES TO BE SET IN POURED IN PLACE CONCRETE AND OTHER STRUCTURAL COMPONENTS, AS THEY ARE CONSTRUCTED.
   - H) SEQUENCE, COORDINATE, AND INTEGRATE INSTALLATIONS OF MATERIALS AND EQUIPMENT FOR EFFICIENT FLOW OF THE WORK. GIVE PARTICULAR ATTENTION TO LARGE EQUIPMENT REQUIRING POSITIONING PRIOR TO CLOSING IN THE BUILDING.
   - I) FAILURE OF THE CONTRACTOR TO ACQUAINT HIMSELF WITH ALL AVAILABLE INFORMATION CONCERNING THE ABOVE CONDITIONS AND NOT PERFORMING PROPER COORDINATION WILL NOT RELIEVE THE CONTRACTOR FROM THE RESPONSIBILITY FOR ESTIMATING THE DIFFICULTIES AND COSTS FOR SUCCESSFULLY PERFORMING THE COMPLETE WORK UNDER THIS PROJECT.
4. SHUTDOWNS: WRITTEN REQUESTS FOR APPROVAL FOR PLANNED SHUTDOWNS OR INTERRUPTION OF OWNER'S UTILITIES, SYSTEMS AND EQUIPMENT SHALL BE MADE 15 DAYS PRIOR TO THE START OF THE REQUESTED SHUTDOWN PERIODS.
5. CODES AND STANDARDS: THE CONTRACTOR SHALL FOLLOW ALL FEDERAL, STATE AND LOCAL CODES THAT HAVE JURISDICTION WHERE THE WORK IS BEING PERFORMED. THROUGHOUT THE CONTRACT DOCUMENTS CERTAIN CODES AND STANDARDS ARE REFERENCED. THE CONTRACTOR SHALL USE THE LATEST VERSIONS OF CODES AND STANDARDS REFERENCED UNLESS OTHERWISE NOTED. IF THE CONTRACTOR IS NOT FAMILIAR WITH THE REFERENCED STANDARD THEY SHALL CONTACT THE OWNER'S REPRESENTATIVE FOR DIRECTION.
6. WORKMAN: ALL WORK SHALL BE DONE WITH LICENSED WORKMEN IN ACCORDANCE WITH FEDERAL, STATE AND LOCAL GOVERNING AUTHORITIES CODES AND REGULATIONS.
7. SUBMITTALS: THE CONTRACTOR SHALL PROVIDE SUBMITTALS FOR ALL EQUIPMENT AND MATERIALS BEING PROVIDED BEFORE SUCH EQUIPMENT AND MATERIALS ARE PURCHASED AND INSTALLED. THE SUBMITTALS SHALL BE REVIEWED AND RETURNED BY THE OWNER'S REPRESENTATIVE WITH APPROPRIATE COMMENTS. SUBMITTALS SHALL BE SUBMITTED ELECTRONICALLY IN PDF FORMAT AND WILL BE RETURNED WITH COMMENTS TO THE CONTRACTOR IN PDF FORMAT.
8. AS–BUILT DOCUMENTATION: THE CONTRACTOR SHALL PROVIDE ONE MARK–UP SET OF CONSTRUCTION DOCUMENTS SHOWING FINAL AS–BUILT CONDITIONS. DOCUMENTS SHALL CLEARLY SHOW THE CHANGES MADE TO THE INSTALLED SYSTEMS.
9. EQUIPMENT WARRANTIES, MAINTENANCE MANUALS AND INSTALLATION MANUALS: TURN OVER TO THE OWNER ALL MANUFACTURERS' WARRANTIES, MAINTENANCE MANUALS, AND INSTALLATION MANUALS FOR EQUIPMENT AND MATERIALS PROVIDED.
10. PHOTOGRAPHS: PHOTOGRAPHS ARE PROVIDED TO SHOW CURRENT CONDITION OF BUILDING SYSTEMS TO ASSIST THE CONTRACTOR. PHOTOGRAPHS DO NOT SHOW ALL AREAS OF THE BUILDING OR ALL SYSTEM CONDITIONS, THUS REQUIRING THE CONTRACTOR TO VISIT THE SITE BEFORE PERFORMING WORK. PHOTOGRAPHS ARE NOT INTENDED TO SHOW SCOPE OF WORK. PLANS, NOTES, SPECIFICATIONS AND OTHER BID DOCUMENTS INDICATE SCOPE OF WORK.
11. TERMINOLOGY:
   - A) THE TERM "INDICATED" SHALL MEAN, "AS SHOWN ON CONTRACT DOCUMENTS (SPECIFICATIONS, DRAWINGS, AND RELATED ATTACHMENTS)".
   - B) THE TERM "PROVIDE" SHALL MEAN, "TO FURNISH, INSTALL, AND CONNECT COMPLETELY".
   - C) THE TERM "COORDINATE" SHALL MEAN ONE OR MORE OF THE FOLLOWING: "TO MANAGE, INTERFACE, COMMUNICATE, MAKE ARRANGEMENT, BRING INTO ORDER, ADMINISTER AND HANDLE COMPLETELY".
   - D) THE TERM "INTERIOR" IS AN INTERIOR LOCATION WHERE ITS ENVIRONMENT IS HEATED AND/OR AIR CONDITIONED AND NOT SUBJECT TO OUTSIDE WEATHER CONDITIONS.
   - E) THE TERM "EXTERIOR" IS ALL LOCATIONS, WHICH ARE NOT INTERIOR, OR UNDERGROUND.
   - F) THE TERM "INTERIOR FINISHED SPACE" IS INTERIOR SPACES, WHICH ARE USED FOR OFFICES, CORRIDORS, LOBBIES, TOILETS, STORAGE AND FILING ROOMS, LOUNGES, MECHANICAL ROOMS, ELECTRICAL ROOMS, ETC.
13. DEMOLITION: DEMOLITION OF INDICATED ITEMS INCLUDES THE REMOVAL AND PROPER DISPOSAL OF THOSE ITEMS AND ALL ASSOCIATED PIPING, DUCTWORK, WIRING AND HANGERS. ELECTRICAL BRANCH, CONTROL, TELEPHONE, AND ALARM WIRING SHALL BE REMOVED BACK TO PANELBOARDS OR RELATED SYSTEM PANELS OR BACKBOARDS.
14. EQUIPMENT AND MATERIAL INSTALLATIONS:
   - A) ALL EQUIPMENT AND MATERIALS SHALL BE LABELED AND LISTED, AND INSTALLED IN ACCORDANCE WITH THEIR LISTING AND MANUFACTURER'S REQUIREMENTS.
   - B) WHEN A MANUFACTURER RECOMMENDS AN OPTION OR ACCESSORY ITEM FOR THE INSTALLED CONDITION, OPERATION, OR ENVIRONMENT THAT IS TO BE EXPERIENCED, SUCH ITEM SHALL BE SUPPLIED AT NO ADDITIONAL COST TO THE OWNER.
   - C) IF AN EQUIPMENT MANUFACTURER REQUIRES LARGER CAPACITY, CIRCUITRY AND/OR EQUIPMENT, THE CONTRACTOR SHALL PROVIDE SUCH CAPACITY AND/OR EQUIPMENT UNDER HIS CONTRACT AT NO ADDITIONAL COST TO THE OWNER.
   - D) LOCATE ALL EQUIPMENT, WHICH REQUIRES SERVICING IN FULLY ACCESSIBLE POSITIONS. IF REQUIRED FOR BETTER ACCESSIBILITY, FURNISH ACCESS DOORS FOR THAT PURPOSE.
   - E) MINOR DEVIATIONS FROM DRAWINGS MAY BE MADE TO ALLOW FOR BETTER ACCESSIBILITY.
   - F) ALL WORK IN INTERIOR FINISHED SPACES SHALL BE CONCEALED BEHIND WALLS, ABOVE CEILINGS OR HUNG CEILINGS, OR UNDER THE FLOOR. PROVIDE ALL NECESSARY CUTTING, PATCHING, REPAINTING AND/OR REPLACEMENT OF CEILING TILES AS REQUIRED TO PERFORM WORK.
   - G) INSTALL SYSTEMS, MATERIALS, AND EQUIPMENT TO CONFORM WITH APPROVED SUBMITTAL DATA, INCLUDING COORDINATION DRAWINGS (IF REQUIRED), TO GREATEST EXTENT POSSIBLE. CONFORM TO ARRANGEMENTS INDICATED BY THE CONTRACT DOCUMENTS, RECOGNIZING THAT PORTIONS OF THE WORK ARE SHOWN ONLY IN DIAGRAMMATIC FORM. WHERE COORDINATION REQUIREMENTS CONFLICT WITH INDIVIDUAL SYSTEM REQUIREMENTS, REFER CONFLICT TO THE ARCHITECT/ENGINEER.
   - H) INSTALL SYSTEMS, MATERIALS, AND EQUIPMENT LEVEL AND PLUMB, PARALLEL AND PERPENDICULAR TO OTHER BUILDING SYSTEMS AND COMPONENTS, WHERE INSTALLED EXPOSED IN FINISHED SPACES
   - I) INSTALL EQUIPMENT TO FACILITATE SERVICING, MAINTENANCE, AND REPAIR OR REPLACEMENT OF EQUIPMENT COMPONENTS. AS MUCH AS PRACTICAL, CONNECT EQUIPMENT FOR EASE OF DISCONNECTING, WITH MINIMUM OF INTERFERENCE WITH OTHER INSTALLATIONS.
   - J) INSTALL SYSTEMS, MATERIALS, AND EQUIPMENT GIVING RIGHT OF WAY PRIORITY TO SYSTEMS REQUIRED TO BE INSTALLED AT A SPECIFIED SLOPE.
   - K) WHERE MOUNTING HEIGHTS ARE NOT DETAILED OR DIMENSIONED, INSTALL SYSTEMS, MATERIALS, AND EQUIPMENT TO PROVIDE THE MAXIMUM HEADROOM POSSIBLE.
   - L) ASCERTAIN FROM EXAMINATION OF THE DRAWINGS, ANY SPECIAL TEMPORARY OPENINGS IN THE BUILDING REQUIRED FOR THE ADMISSION OF APPARATUS PROVIDED UNDER THIS DIVISION. NOTIFY THE CONTRACTOR WITH SUFFICIENT NOTICE TO PROVIDE THESE OPENINGS. IN THE EVENT OF FAILURE TO GIVE SUFFICIENT NOTICE, THE CONTRACTOR SHALL ASSUME ALL COSTS OF PROVIDING SUCH OPENINGS THEREAFTER. THE CONTRACTOR SHALL BE RESPONSIBLE FOR ALL DISASSEMBLY AND ASSEMBLY OF EQUIPMENT AS REQUIRED TO PLACE EQUIPMENT IN THEIR FINAL LOCATIONS.
   - M) BEFORE TRENCHING OR DIGGING, CONTACT THE UTILITY COMPANIES BY CALLING THE "CALL BEFORE YOU DIG" SERVICE AT 1–800–922–4455 FOR CONNECTICUT OR "DIG SAFE" AT 1–800–322–4844 FOR MASSACHUSETTS FOR INFORMATION REGARDING THE LOCATION OF UNDERGROUND UTILITIES. DO NOT RELY ON CONTRACT SITE AND BUILDING DRAWINGS FOR UTILITY INFORMATION AS THEY ARE SCHEMATIC IN NATURE AND DO NOT SHOW EXACT INFORMATION OR ALL UTILITY LINES THAT MAY BE PRESENT.
15. FIRE RATINGS: THE CONTRACTOR SHALL REVIEW ALL CONTRACT DOCUMENTS FOR FIRE SEPARATION AND FIRE RATED ASSEMBLIES. ALL PIPING, DUCTWORK AND CONDUITS PASSING THROUGH OR PENETRATING WALLS, CEILINGS AND FLOORS SHALL BE PROVIDED WITH A UL LISTED FIRE STOPPING ASSEMBLIES. UL LISTED FIRE STOPPING ASSEMBLIES SHALL BE SUITABLE FOR THE CONDITIONS ENCOUNTERED AND SHALL BE RATED EQUAL TO THE RATING OF THE WALL, CEILING OR FLOOR. REVIEW FIRE RATED ASSEMBLIES THAT ALLOW PENETRATIONS OF ITEMS SUCH AS OUTLET BOXES AND CONDUITS THAT DO NOT REQUIRE FIRE STOPPING. SPACE AND POSITION THESE DEVICES AS ALLOWED PER THE ASSEMBLY'S UL RATING.
16. SERVICE LABELING: LABEL EQUIPMENT, PIPING, CONDUITS, INCLUDING FANS, AIR HANDLERS, TERMINAL UNITS, PANELBOARDS, ETC. WITH LABELS MADE OF SELF–STICKING, PLASTIC FILM DESIGNED FOR PERMANENT INSTALLATION. LABELS SHALL MATCH DESIGNATIONS AS INDICATED ON CONTRACT DRAWINGS. IDENTIFY PIPING AND CONDUITS IN ACCORDANCE WITH OSHA 29 CFR 1910.144, EXCEPT THAT LABELS OR TAPES MAY BE USED IN LIEU OF PAINTING OR STENCILING. SPACING OF IDENTIFICATION MARKING ON RUNS SHALL NOT EXCEED 50 FEET. MATERIALS FOR LABELS AND TAPES SHALL CONFORM TO CID A–A–1689, AND SHALL BE GENERAL PURPOSE TYPE AND COLOR CLASS.
   - A) IN ADDITION IDENTIFY SERVICES AS INDICATED BELOW:
   - B) EACH POINT OF ENTRY AND EXIT OF PIPE OR CONDUITS PASSING THROUGH WALLS.
   - C) EACH CHANGE IN DIRECTION, I.E., ELBOWS, TEES.
   - D) IN CONGESTED OR HIDDEN AREAS AND AT ALL ACCESS PANELS AT EACH POINT REQUIRED TO CLARIFY SERVICE OR INDICATED HAZARD.
   - E) IN LONG STRAIGHT RUNS, LOCATE LABELS AT DISTANCES WITHIN EYESIGHT OF EACH OTHER NOT TO EXCEED 50 FEET. ALL LABELS SHALL BE VISIBLE AND LEGIBLE FROM THE PRIMARY SERVICE AND OPERATING AREA.
17. MANUFACTURER'S NAMEPLATES: EACH ITEM OF EQUIPMENT SHALL HAVE A NAMEPLATE BEARING THE MANUFACTURER'S NAME, ADDRESS, MODEL NUMBER, AND SERIAL NUMBER SECURELY AFFIXED IN A CONSPICUOUS PLACE; THE NAMEPLATE OF THE DISTRIBUTING AGENT WILL NOT BE ACCEPTABLE.
18. POSTED OPERATING INSTRUCTIONS: PROVIDE FOR EACH SYSTEM AND PRINCIPAL ITEM OF EQUIPMENT AS SPECIFIED FOR USE BY OPERATION AND MAINTENANCE PERSONNEL. PRINT OR ENGRAVE OPERATING INSTRUCTIONS AND FRAME UNDER GLASS OR IN APPROVED LAMINATED PLASTIC. POST INSTRUCTIONS WHERE DIRECTED. FOR OPERATING INSTRUCTIONS EXPOSED TO THE WEATHER, PROVIDE WEATHER–RESISTANT MATERIALS OR WEATHERPROOF ENCLOSURES. OPERATING INSTRUCTIONS SHALL NOT FADE WHEN EXPOSED TO SUNLIGHT AND SHALL BE SECURED TO PREVENT EASY REMOVAL OR PEELING. THE OPERATING INSTRUCTIONS SHALL INCLUDE THE FOLLOWING:
   - A) WIRING DIAGRAMS, CONTROL DIAGRAMS, AND CONTROL SEQUENCE FOR EACH PRINCIPAL SYSTEM AND ITEM OF EQUIPMENT.
   - B) START UP, PROPER ADJUSTMENT, OPERATING, LUBRICATION, AND SHUTDOWN PROCEDURES.
   - C) SAFETY PRECAUTIONS.
   - D) THE PROCEDURE IN THE EVENT OF EQUIPMENT FAILURE.
   - E) OTHER ITEMS OF INSTRUCTION AS RECOMMENDED BY THE MANUFACTURER OF EACH SYSTEM OR ITEM OF EQUIPMENT.
19. WARNING SIGNS: PROVIDE WARNING SIGNS FOR THE ENCLOSURES OF ELECTRICAL EQUIPMENT INCLUDING SUBSTATIONS, PAD–MOUNTED TRANSFORMERS, PAD–MOUNTED SWITCHES, GENERATORS, AND SWITCHGEAR HAVING A NOMINAL RATING EXCEEDING 600 VOLTS.
20. EXTERIOR FERROUS MATERIALS: ALL EXTERIOR FERROUS MATERIALS SHALL BE PROTECTED FROM CORROSION BY ONE OF THE FOLLOWING METHODS:
   - A) COVERED WITH A NON–FERROUS OR NON–CORRODING MATERIAL.
   - B) MATERIALS THAT ARE INSULATED ON THE EXTERIOR.
   - C) MATERIALS THAT ARE GALVANIZED.
   - D) MATERIALS THAT ARE PAINTED. EXTERIOR PAINTING SHALL CONSIST OF A BASE COAT OF AN APPROPRIATE PRIMER AND TWO COATS OF FINAL PAINT. FINAL PAINT COLOR SHALL BE SELECTED BY THE OWNER'S REPRESENTATIVE.

ABBREVIATIONS

% – PERCENT
(TYP.) – TYPICAL FOR OTHER LOCATIONS
Ø or DIA – DIAMETER
° or DEG – DEGREE
' – FEET
" – INCHES
A – AMPERES
A – COMPRESSED AIR PIPING
ABV – ABOVE
AC – ALTERNATING CURRENT
ACID – ACID WASTE PIPING
ACLC – AIR–COOLED LIQUID CHILLER
AFF – ABOVE FINISHED FLOOR
AHU – AIR HANDLING UNIT
AMP – AMPERE
AS – AIR SEPARATOR
ATM – ATMOSPHERE
ATS – AUTOMATIC TRANSFER SWITCH
AWG – AMERICAN WIRE GAUGE
BHP – BRAKE HORSEPOWER
BKBD – BACKBOARD
BLW – BELOW
BTU – BRITISH THERMAL UNIT
C – CONDENSATE
C – CONDUIT RACEWWAY
CO2 – CARBON DIOXIDE
CTV – CLOSED CIRCUIT TELEVISION
CDWR – CONDENSER WATER RETURN
CDWS – CONDENSER WATER SUPPLY
CFM – CUBIC FEET PER MINUTE
CH – CABINET HEATER
CI – CAST IRON
CKT – CIRCUIT
CLG – CEILING
CO – CLEANOUT
CT – COMPRESSION TANK
CV – COEFFICIENT, VALVE FLOW
CW – DOMESTIC COLD WATER
CWR – CHILLED WATER RETURN
CWS – CHILLED WATER SUPPLY
D – DRAIN
D – DRY
DA – DRY AGENT PIPING
DB – DECIBEL
DB – DRY–BULB
DC – DIRECT CURRENT
DCW – DOMESTIC COLD WATER
DHW – DOMESTIC HOT WATER
DHC – DOMESTIC HOT WATER RECIRCULATION
DTW –DOMESTIC TEMPERED WATER
DTC – DOMESTIC TEMPERED WATER RECIR.
DF – DRINKING FOUNTAIN
DI – DEIONIZED WATER PIPING
DL – REFRIGERANT DISCHARGE
DLUG – DELUGE PIPING
DN – DOWN
DS – DRY STANDPIPE PIPING
DTR – DUEL TEMP RETURN
DTS – DUEL TEMP SUPPLY
DWG – DRAWING
EXG – EXISTING
EAT – ENTERING AIR TEMPERATURE
EF – EXHAUST FAN
EGC – EQUIPMENT GROUNDING CONDUCTOR
EL – ELEVATION
EMT – ELECTRICAL METALLIC TUBING
ENT – ENTERING
EQPMT – EQUIPMENT
EWH – ELECTRIC WATER HEATER
EXG – EXISTING
F – FAHRENHEIT
FA – FIRE ALARM
FAAP – FIRE ALARM ANNUNCIATION PANEL
FACP – FIRE ALARM CONTROL PANEL
FC – FAN COIL
FCO – FLOOR CLEANOUT
FD – FLOOR DRAIN
FLR – FLOOR
FM – FM–200
FMP – FIRE MANUAL PULL STATION
FOC – FUEL OIL SUCTION
FOG – FUEL OIL GAUGE
FOR – FUEL OIL RETURN
FOS – FUEL OIL SUPPLY
FOV – FUEL OIL VENT
FP – FIRE PROTECTION
FPM – FEET PER MINUTE
FPS – FEET PER SECOND
FS – FLOW SWITCH
FT – FEET
FU – FUSED
G – LOW PRESSURE NATURAL GAS
GA – GAUGE
GAL – GALLON(S)
GEC – GROUNDING ELECTRODE CONDUCTOR
GFCI – GROUND FAULT CIRCUIT INTERRUPTER
GFI – GROUND FAULT INTERRUPTER
GFP – GROUND FAULT PROTECTION
GMP – GLYCOL MAKE–UP PACKAGE
GPH – GALLONS PER HOUR
GPM – GALLONS PER MINUTE
GRS – SANITARY GREASE
GV – GAS VENT PIPING
HD – HEAD
HGT – HEIGHT
HOA – HAND OFF AUTO
HOR – HORIZONTAL
HP – HORSEPOWER
HPC – HIGH PRESSURE STEAM CONDENSATE
HPG – HIGH PRESSURE NATURAL GAS
HPR – HEAT PUMP WATER RETURN
HPS – HEAT PUMP WATER SUPPLY
HPS – HIGH PRESSURE STEAM
HR – HOUR(S)
HRU – HEAT RECOVERY UNIT
HTWR – HIGH TEMP HOT WATER RETURN
HTWS – HIGH TEMP HOT WATER SUPPLY
HWR – HOT WATER RETURN
HWS – HOT WATER SUPPLY
HWM – HOT WATER MAKE UP
HX – HEAT EXCHANGER
HZ – HERTZ FREQUENCY
ID – INSIDE DIAMETER
IEGC – INSULATED EQUIP. GROUNDING CONDUCTOR
IMC – INTERMEDIATE METAL CONDUIT
IPS – IRON PIPE SIZE
K – THERMAL CONDUCTIVITY
KA.I.C. – KILO–AMPERES INTERRUPTING CURRENT
KVA – KILO VOLT–AMPERES
KW – KILOWATT(S)
KWH – KILOWATT HOUR
KWH – KILOWATT HOUR
LAT – LEAVING AIR TEMPERATURE
LAV – LAVATORY
LBS – POUNDS
LL – REFRIGERANT LIQUIDCINE
LPC – LOW PRESSURE STEAM CONDENSATE
LPS – LOW PRESSURE STEAM
LTD – LEAST TEMPERATURE DIFFERENCE
LTG – LIGHTING
LTWR – LOW TEMP HOT WATER RETURN
LTWS – LOW TEMP HOT WATER SUPPLY
MA – MEDICAL GAS COMPRESSED AIR PIPING
MAX – MAXIMUM
MCCB – MOLDED CASE CIRCUIT BREAKER
MDP – MAIN DISTRIBUTION PANEL
MIN – MINIMUM
MLO – MAIN LUG ONLY
MOCP – MAXIMUM OVERCURRENT PROTECTION
MPC – MED PRESSURE STEAM CONDENSATE
MPG – MED PRESSURE NATURAL GAS
MPS – MED PRESSURE STEAM
MTWR – MED TEMP HOT WATER RETURN
MTWS – MED TEMP HOT WATER SUPPLY
MW – MAKEUP WATER
N/A – NOT APPLICABLE
N2 – MEDICAL GAS NITROGEN
N2O – MEDICAL GAS NITROUS OXIDE PIPING
NC – NOISE CRITERIA
NC – NORMALLY CLOSED
NEC – NATIONAL ELECTRIC CODE
NF – NON–FUSED
NFWH – NON–FREEZE WALL HYDRANT
NO – NORMALLY OPEN
NO – NUMBER
NTS – NOT TO SCALE
O2 – MEDICAL GAS OXYGEN
OA – OUTSIDE AIR
OD – STORM OVERFLOW
OS&Y – OUTSIDE STEM & YOKE
OZ – OUNCE
P – POLE
PA – PRE ACTION PIPING
PAA – PUBLIC ADDRESS AMPLIFIER
PC – PUMPED CONDENSATE
PD – PRESSURE DROP OR DIFFERENCE
PH – PHASE
PIV – POST INDICATING VALVE
PROP – PROPANE
PROPV – PROPANE VENT
PSI – POUNDS PER SQUARE INCH
PSIA – PSI ABSOLUTE
PSIG – PSI GAUGE
PWR – POWER
QTY – QUANTITY
R12 – REFRIGERANT (12,22,ETC.)
RA – RETURN AIR
RCVR – RECEIVER
RECIRC – RECIRCULATE
RECPT – RECEPTACLE
RH – RELATIVE HUMIDITY
RM – ROOM
RPDA – REDUCE PRESSURE PRINCIPLE
RPM – REVOLUTIONS PER MINUTE
RSC – RIGID STEEL CONDUIT
RTU – ROOF TOP UNIT
SA – SUPPLY AIR
SAN – SANITARY
SEC – SECOND
SF – SAFETY FACTOR
SF – SQUARE FEET
SHR – SHOWER
SK – SINK
SL – REFRIGERANT SUCTION
SP – SPRINKLER PIPE
SP – STATIC PRESSURE
SPEC – SPECIFICATIONS
SPLY – SUPPLY
SS – SERVICE SINK
STD – STANDARD
STRM – STORM PIPING
SUCT – SUCTION
SWBD – SWITCHBOARD
TEMP – TEMPERATURE
T–STAT – THERMOSTAT
TWR – DOMESTIC TEMPERED WATER RETURN
TWS – DOMESTIC TEMPERED WATER
TX – TRANSFORMER #1
TYP – TYPICAL
U – HEAT TRANSFER COEFFICIENT
UH – UNIT HEATER
UR – URINAL
V – VOLT
VA – VOLT AMPERE
VAC – MEDICAL GAS VACUUM
VAC – VOLTS–ALTERNATING CURRENT
VAV – VARIABLE AIR VOLUME
VEL – VELOCITY
VENT – VENTILATION
VERT – VERTICAL
VH – VENT HOOD
VL – REFRIGERANT VAPORCINE
VOL – VOLUME
VTR – VENT THRU ROOF
W – WASTE
W – WATT(S)
WAG – MEDICAL GAS WAG
WB – WET BULB
WC – WATER CLOSET
WCO – WALL CLEANOUT
WO – WASTE OIL
WP – WEATHERPROOF
WS – WET STANDPIPE PIPING
WSHPS – WATER SOURCE HEAT PUMP SUPPLY
WSHPR – WATER SOURCE HEAT PUMP RETURN
WSHPD – WATER SOURCE HEAT PUMP DRAIN
WSHPM – WATER SOURCE HEAT PUMP MAKE UP

SYM	DESCRIPTION	DATE	APPR

NAVFAC

AMES & WHITAKER Architects

BID SET SUBMISSION

12/30/19

DES	KWK	DRW	GJG	CHK	KWK

<<PM/DM>> RC
BRANCH MANAGER XX
CHIEF ENG/ARCH XXX
<<XX>> XX

DEPARTMENT OF THE NAVY
NAVAL FACILITIES ENGINEERING COMMAND
NORTHEAST IPT
NAVAL FACILITIES ENGINEERING COMMAND ~ MID-ATLANTIC
NAVAL STATION – NORFOLK, VIRGINIA
NAVAL STATION NEWPORT
NEWPORT, RI
DECENTRALIZE STEAM AT BOILER PLANT A6
MECHANICAL NOTES & SYMBOLS

SCALE: AS NOTED
EPROJECT NO.: 1389839
CONSTR. CONTR. NO.
NAVFAC DRAWING NO. 12799456
SHEET 26 OF 65

NAVSTA DRAWING NO. 44515–412

M001

DRAWFORM REVISION: 10 MARCH 2009

GENERAL SYMBOLS

A / A8	PLAN TITLES — SCALE: 1/8" = 1'-0" (0, 4', 8', 16')
A / A8	PHOTO MARKER ARROW INDICATES DIRECTION OF VIEW
	NORTH ARROW
	POINT OF CONNECTION
A — - — A	MATCH LINE
	ITEMS TO BE DEMOLISHED
	ITEMS TO BE DEMOLISHED ON OVERLAY DIAGRAM

FUEL PIPING SYMBOLS

4" G	LOW PRESSURE GAS
4" MPG	MEDIUM PRESSURE GAS
4" HPG	HIGH PRESSURE GAS
4" GV	GAS VENT

HYDRONIC PIPING SYMBOLS

4" HWS	HOT WATER SUPPLY
4" HWR	HOT WATER RETURN
4" HWD	HOT WATER DRAIN
4" HWM	HOT WATER MAKEUP

STEAM PIPING SYMBOLS

4" LPS	LOW PRESSURE STEAM PIPE
4" LPC	LOW PRESSURE CONDENSATE PIPE
4" LPD	LOW PRESSURE DRAIN
4" LPMW	LOW PRESSURE MAKEUP WATER
4" LPPC	LOW PRESSURE PUMPED CONDENSATE
4" LPBF	LOW PRESSURE BOILER FEED WATER
4" LPBD	LOW PRESSURE BOILER BLOWDOWN
4" LPV	LOW PRESSURE VENT
4" HPS	HIGH PRESSURE STEAM PIPE
4" HPC	HIGH PRESSURE CONDENSATE PIPE
4" HPD	HIGH PRESSURE DRAIN
4" HPMW	HIGH PRESSURE MAKEUP WATER

VALVE SYMBOLS

	BALL VALVE MOTORIZED
	BALL VALVE TEE LEVER
	BALL VALVE LEVER
	BUTTERFLY VALVE GEAR
	BALL VALVE SAFETY
	BUTTERFLY VALVE MOTORIZED
	BUTTERFLY VALVE OS&Y
	BUTTERFLY VALVE SOLENOID
	BUTTERFLY VALVE LEVER
	BUTTERFLY VALVE TEE LEVER
	BACKFLOW PREVENTER – DOUBLE CHECK DETECTOR ASSEMBLY
	BACKFLOW PREVENTER – DOUBLE CHECK VALVE
	BACKFLOW PREVENTER – REDUCED PRESSURE DETECTOR ASSEMBLY
	BACKFLOW PREVENTER – REDUCED PRESSURE ZONE
	CROSS
	CHECK VALVE
	GATE VALVE GEAR
	GATE VALVE MOTORIZED
	GATE VALVE SAFETY
	GATE VALVE SOLENOID
	GATE VALVE TEE LEVER
	GATE VALVE LEVER
	GATE VALVE OS&Y
	GLOBE VALVE LEVER
	GLOBE VALVE OS&Y
	GLOBE VALVE GEAR
	GLOBE VALVE MOTORIZED
	GLOBE VALVE SAFETY
	GLOBE VALVE SOLENOID
	GLOBE VALVE TEE LEVER
	DRAIN VALVE
	PLUG VALVE GEAR
	PLUG VALVE LEVER
	PLUG VALVE MOTORIZED
	PLUG VALVE OS&Y
	PLUG VALVE QUICK OPEN
	PLUG VALVE SAFETY
	PLUG SOLENOID
	PLUG VALVE TEE LEVER
	PRESSURE REGULATING VALVE
	PRESSURE RELIEF VALVE
	RELIEF VALVE
	3-WAY VALVE LEVER
	3-WAY VALVE TEE LEVER
	3-WAY VALVE MOTORIZED

CONTROL SYMBOLS

T	THERMOSTAT, ANALOG
P	PRESSURE, ANALOG
CO2	CARBON DIOXIDE SENSOR, ANALOG
AF	AIR FLOW
R	POSITION/READING, ANALOG
H	HUMIDITY, ANALOG
MT	METER, ANALOG
M	MOTOR, MODULATING
M	MOTOR, TWO POSITION
FS	FLOW SWITCH, BINARY
ES	END SWITCH, BINARY
AL	ALARM, BINARY
FT	FREEZE-STAT, BINARY
SD	DUCT SMOKE DETECTOR, BINARY
OC	OCCUPANCY SENSOR, BINARY
S	SWITCH
T	THERMOSTAT, BINARY
RF	REFRIGERANT DETECTOR
LD	LIQUID DETECTOR
CS	CURRENT SENSOR
FD	FLOW DIRECTION
EVS	EMERGENCY VENTILATION AIR FLOW

SYM	DESCRIPTION	DATE	APPR

NAVFAC

AMES & WHITAKER Architects

BID SET SUBMISSION

12/30/19

DES KWK	DRW GJG	CHK KWK	
<<PM/DM>>	RC		
BRANCH MANAGER	XX		
CHIEF ENG/ARCH	XXX		
<<XXX>>	XX		

DEPARTMENT OF THE NAVY
NAVAL FACILITIES ENGINEERING COMMAND
NORTHEAST IPT
NAVAL FACILITIES ENGINEERING COMMAND ~ MID-ATLANTIC
NAVAL STATION – NORFOLK, VIRGINIA
NAVAL STATION NEWPORT
NEWPORT, RI

DECENTRALIZE STEAM AT BOILER PLANT A6

MECHANICAL NOTES & SYMBOLS

SCALE: AS NOTED
EPROJECT NO.: 1389839
CONSTR. CONTR. NO.
NAVFAC DRAWING NO. 12799457
SHEET 27 OF 65

NAVSTA DRAWING NO. 44516-412

M002

DRAWFORM REVISION: 10 MARCH 2009

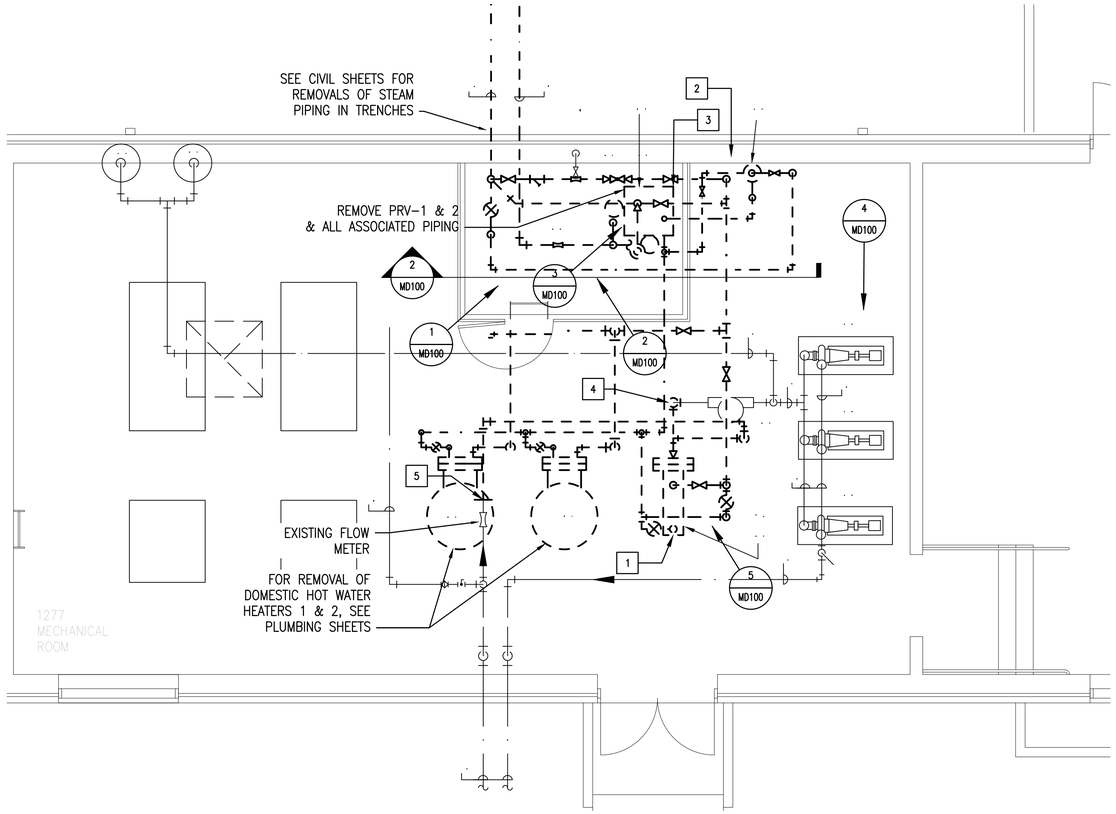

BUILDING 23A PARTIAL DEMOLITION PLAN

6 / MD100

SCALE: 1/4" = 1'-0" (0, 2', 4', 8')

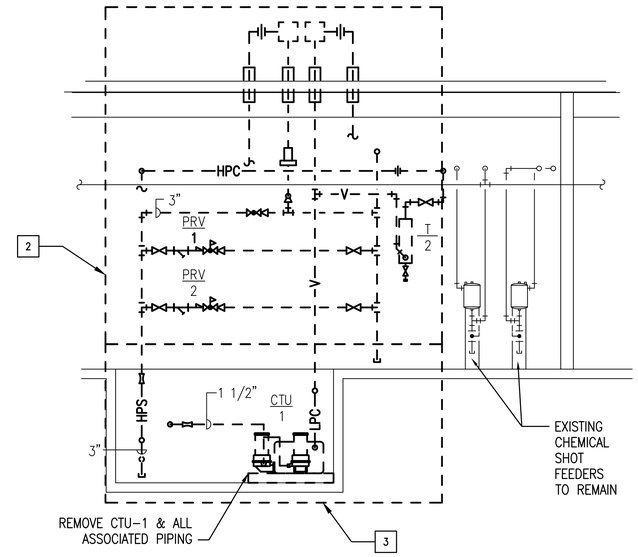

SECTION 2/MD102

7 / MD100

SCALE: 1/4" = 1'-0" (0, 2', 4', 8')

B23A DEMO WORK ITEMS

XX

1. REMOVE (2) STEAM HEAT EXCHANGERS AND ALL ASSOCIATED PIPING, CONTROLS & COMPONENTS. REMOVE CONTROLS UP TO EXISTING PANEL. REMOVE MOUNTING STRUCTURE.
2. REMOVE STEAM SUPPLY SYSTEM INCLUDING TRAPS, PRESSURE REDUCING STATION, PIPING, MOUTING & EQUIPMENT. TURN OVER AMI METER TO NAVY.
3. REMOVE CONDENSATE RETURN PUMP, ALL CONDENSATE RETURN PIPING, MOUNTING, AND ASSOCIATED EQUIPMENT.
4. REMOVE HWS PIPING BACK TO EXISTING AIR SEPARATOR.
5. REMOVE HWR PIPING UP TO EXISTING FLOW METER.
6. REMOVE ALL BRANCH CIRCUITS FROM HOT WATER HEATERS, METERING EQUIPMENT, AND ALL OTHER ASSOCIATED STEAM EQUIPMENT SHOWN TO BE REMOVED.

REMOVE ALL STEAM PIPING INCLUDING PRESSURE REDUCING STATION

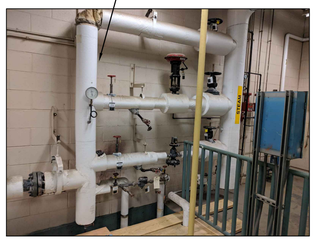

STEAM PRESSURE REDUCING STATION

1 / MD100 NO SCALE

REMOVE STEAM PIPING

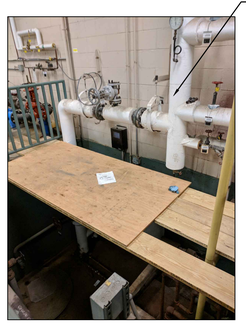

STEAM PIT

2 / MD100 NO SCALE

REMOVE CONDENSATE RETURN PUMP

CTU-1 IN STEAM PIT

3 / MD100 NO SCALE

EXISTING HW DISTRIBUTION PUMPS TO REMAIN

HEATING PUMPS

4 / MD100 NO SCALE

STEAM TO HOT WATER HEAT EXCHANGERS TO BE REMOVED

STEAM TO HOT WATER HEAT EXCHANGERS

5 / MD100 NO SCALE

BUILDING 23A

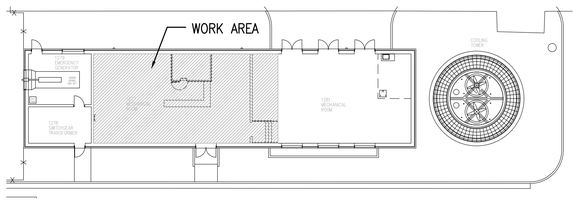

KEY PLAN

NAVSTA DRAWING NO. 44517-412

APPR	
DATE	
DESCRIPTION	
SYM	

NAVFAC

AMES & WHITAKER Architects

BID SET SUBMISSION

12/30/19

DES KWK	DRW GJG	CHK KWK	
<<PM/DM>>	RC		
BRANCH MANAGER	XX		
CHIEF ENG/ARCH	XXX		
<<XX>>	XX		

DEPARTMENT OF THE NAVY
NAVAL FACILITIES ENGINEERING COMMAND
NORTHEAST IPT
NAVAL FACILITIES ENGINEERING COMMAND ~ MID-ATLANTIC
NAVAL STATION NEWPORT
NAVAL STATION – NORFOLK, VIRGINIA
NEWPORT, RI

DECENTRALIZE STEAM AT BOILER PLANT A6

B23A MECHANICAL DEMOLITION PLAN

SCALE: AS NOTED

EPROJECT NO.: 1389839

CONSTR. CONTR. NO.

NAVFAC DRAWING NO. 12799458

SHEET 28 OF 65

MD100

DRAWFORM REVISION: 10 MARCH 2009

B43 DEMO WORK ITEMS

XX

1. REMOVE STEAM HEAT EXCHANGERS AND ALL ASSOCIATED PIPING, CONTROLS, COMPONENTS & ANY ELECTRICAL WIRING.
2. REMOVE STEAM SUPPLY SYSTEM COMPLETELY INCLUDING TRAPS AND PRESSURE REDUCING STATION. CAP STEAM AND CONDENSATE PIPES AT FOUNDATION. TURN OVER AMI METER TO NAVY.
3. REMOVE CONDENSATE RETURN PUMPS & ALL CONDENSATE RETURN PIPING, HANGERS, AND ASSOCIATED EQUIPMENT.
4. REMOVE BOILER AND ALL ASSOCIATED PIPING, CONTROLS, & WIRING. REMOVE BRANCH CIRCUIT WIRING BACK TO PANEL.
5. DRAIN DIESEL FUEL FROM EXISTING FUEL TANKS AND DISPOSE OF ACCORDING TO ENVIRONMENTAL STANDARDS. REMOVE FUEL TANKS COMPLETELY INCLUDING ALL FUEL SUPPLY PIPING & FUEL FILL PIPING. REMOVE PUMPS AND ASSOCIATED BRANCH WIRING BACK TO PANEL.
6. REMOVE INCOMING PIPING OF HOT WATER RETURN.
7. REMOVE HOT WATER SUPPLY PIPING BACK TO THE MAIN HEADER.

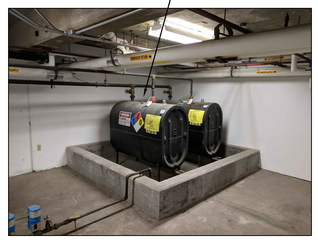

1 MD101 OIL TANKS
NO SCALE

2 MD101 BACK-UP BOILER
NO SCALE

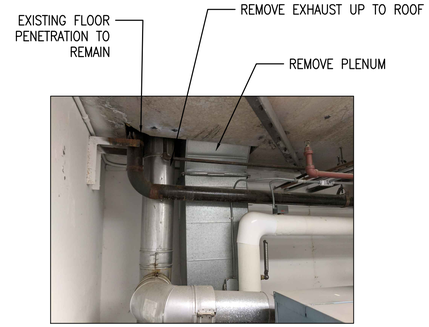

3 MD101 BOILER FLUE & COMBUSTION AIR INTAKE
NO SCALE

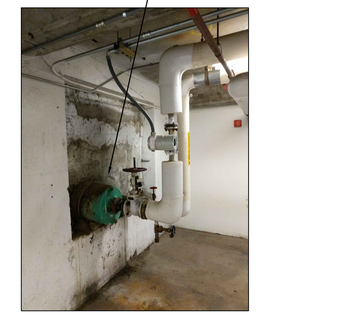

4 MD101 STEAM SERVICE ENTRANCE
NO SCALE

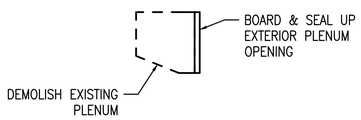

9 MD101 PARTIAL DEMOLITION 1ST FLOOR
SCALE: 1/4" = 1'-0"

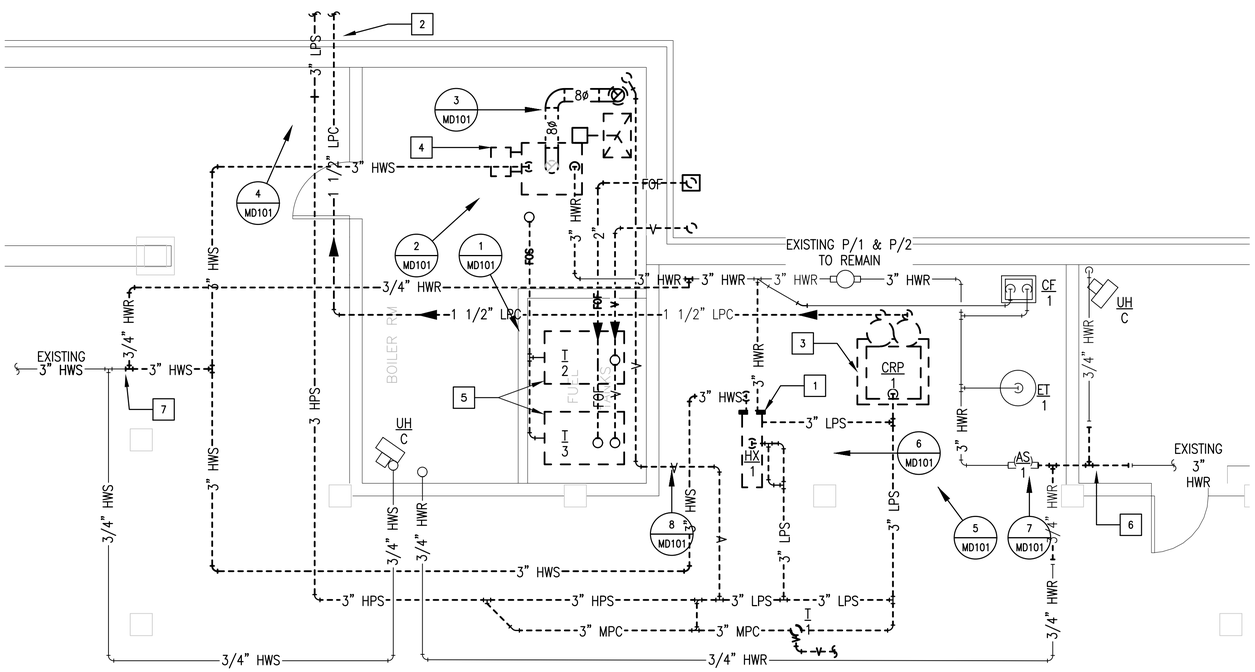

10 MD101 BUILDING 43 PARTIAL DEMOLITION PLAN BASEMENT
SCALE: 1/4" = 1'-0"

5 MD101 MECHANICAL EQUIPMENT
NO SCALE

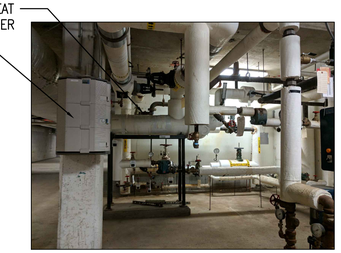

6 MD101 STEAM TO HOT WATER HEAT EXCHANGER
NO SCALE

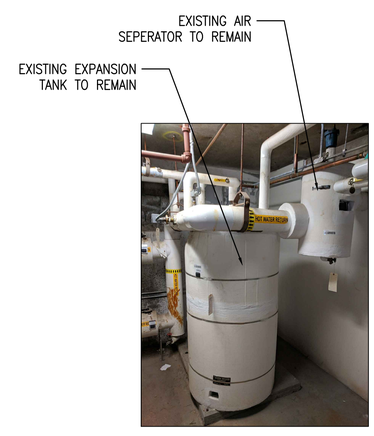

7 MD101 EXPANSION TANK
NO SCALE

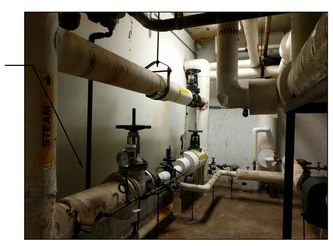

8 MD101 STEAM PRESSURE REDUCING STATION
NO SCALE

BUILDING 43

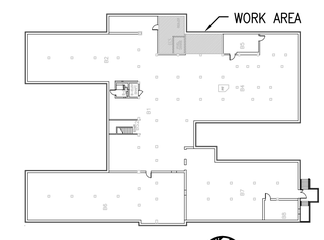

KEY PLAN

NAVSTA DRAWING NO. 44518-412

APPR	DATE	DESCRIPTION	SYM

NAVFAC

AMES & WHITAKER Architects

BID SET SUBMISSION

12/30/19

DES KWK	DRW GJG CHK KWK
<<PM/DM>>	RC
BRANCH MANAGER	XX
CHIEF ENG/ARCH	XXX
<<XXX>>	XX

DEPARTMENT OF THE NAVY
NAVAL FACILITIES ENGINEERING COMMAND
NORTHEAST IPT

NAVAL FACILITIES ENGINEERING COMMAND – MID-ATLANTIC
NAVAL STATION – NORFOLK, VIRGINIA

NAVAL STATION NEWPORT
NEWPORT, RI

DECENTRALIZE STEAM AT BOILER PLANT A6

B43 MECHANICAL DEMOLITION PLAN

SCALE: AS NOTED
EPROJECT NO.: 1389839
CONSTR. CONTR. NO.
NAVFAC DRAWING NO. 12799459
SHEET 29 OF 65

MD101

DRAWFORM REVISION: 10 MARCH 2009

B44 DEMO WORK ITEMS

XX

1. REMOVE STEAM HEAT EXCHANGER AND ALL ASSOCIATED PIPING, CONTROLS, COMPONENTS & ANY BRANCH CIRCUITS OR CONTROL WIRING. REMOVE MOUNTING STRUCTURE.
2. REMOVE STEAM SUPPLY SYSTEM COMPLETELY INCLUDING TRAPS & PRESSURE REDUCING STATION. TURN OVER AMI METER TO NAVY.
3. REMOVE CONDENSATE RETURN PUMPS & ALL CONDENSATE RETURN PIPING, HANGERS, AND ASSOCIATED EQUIPMENT. REMOVE BRANCH CIRCUITS BACK TO PANEL.
4. REMOVE PUMPS INCLUDING ISOLATION VALVES, & BRANCH CIRCUIT WIRING BACK TO PANEL.
5. REMOVE HOT WATER RETURN PIPING BACK TO FLANGE. REMOVE HOT WATER SUPPLY PIPING.

1 MD102 STEAM TO HOT WATER HEAT EXCHANGE
NO SCALE

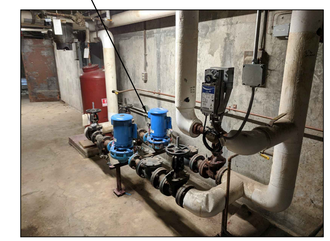

2 MD102 HEATING SYSTEM PUMPS
NO SCALE

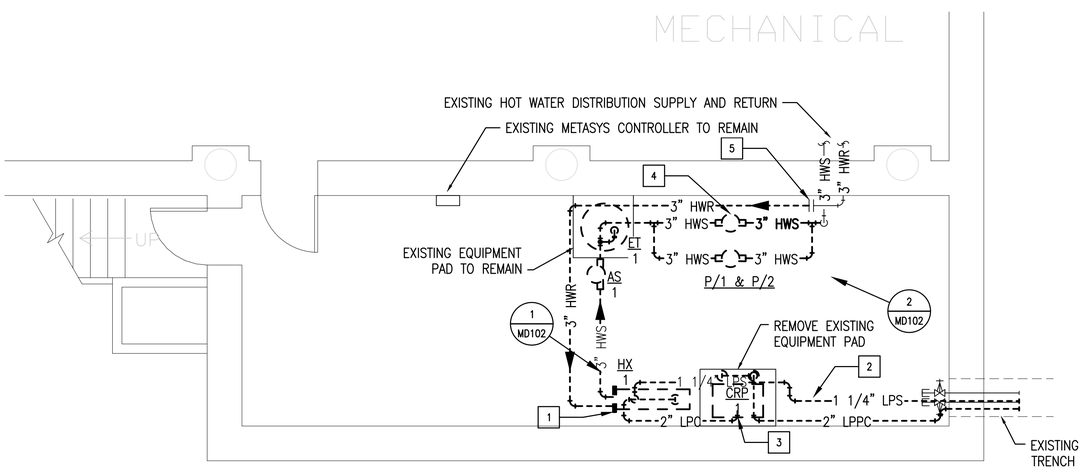

3 MD102 BUILDING 44 PARTIAL DEMOLITION PLAN
SCALE: 1/4" = 1'-0" 0 2' 4' 8'

KEY PLAN

NAVSTA DRAWING NO. 44519-412

SYM	DESCRIPTION	DATE	APPR

NAVFAC

BID SET SUBMISSION

12/30/19

DES KWK	DRW GJG	CHK KWK	
<<PM/DM>>	RC		
BRANCH MANAGER	XX		
CHIEF ENG/ARCH	XXX		
<<XXX>>	XX		

DEPARTMENT OF THE NAVY
NAVAL FACILITIES ENGINEERING COMMAND
NORTHEAST IPT
NAVAL FACILITIES ENGINEERING COMMAND ~ MID-ATLANTIC
NAVAL STATION - NORFOLK, VIRGINIA
NAVAL STATION NEWPORT
NEWPORT, RI
DECENTRALIZE STEAM AT BOILER PLANT A6
B44 MECHANICAL DEMOLITION PLAN

SCALE: AS NOTED
EPROJECT NO.: 1389839
CONSTR. CONTR. NO.
NAVFAC DRAWING NO. 12799460
SHEET 30 OF 65
MD102
DRAWFORM REVISION: 10 MARCH 2009

B49 DEMO WORK ITEMS

XX

1. REMOVE STEAM HEAT EXCHANGER AND ALL ASSOCIATED PIPING, CONTROLS, COMPONENTS & ANY BRANCH CIRCUITS OR CONTROL WIRING. TURN OVER AMI METER TO NAVY.
2. REMOVE STEAM SUPPLY SYSTEM INCLUDING TRAPS, PRESSURE REDUCING STATION
3. REMOVE CONDENSATE RETURN PUMPS & ALL CONDENSATE RETURN PIPING, HANGERS, AND ASSOCIATED EQUIPMENT. REMOVE BRANCH CIRCUIT BACN TO PANEL.
4. REMOVE CIRCULATOR PUMP COMPLETELY AND REMOVE BRANCH WIRING BACK TO SOURCE PANEL.
5. REMOVE ALL HOT WATER SUPPLY AND RETURN PIPING TO EXISTING RISER MAIN.
6. REMOVE EXPANSION TANK INCLUDING ALL PIPING & CONNECTIONS.

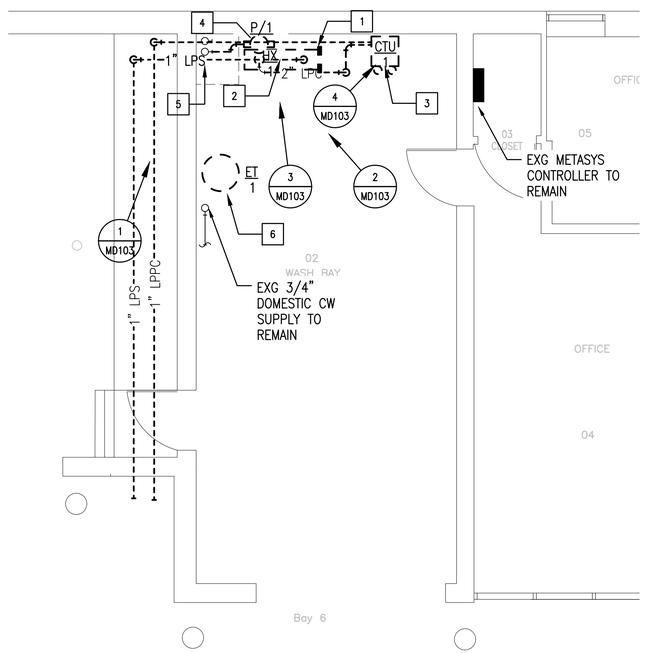

5 MD103 BUILDING 49 PARTIAL DEMOLITION PLAN

SCALE: 1/4" = 1'-0" 0 2' 4' 8'

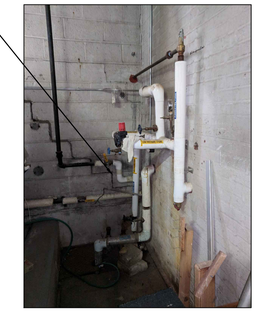

1 MD103 STEAM SERVICE ENTRANCE

NO SCALE

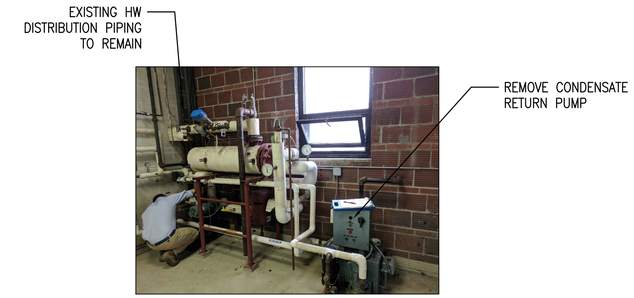

2 MD103 STEAM TO HOT WATER HEAT EXCHANGER

NO SCALE

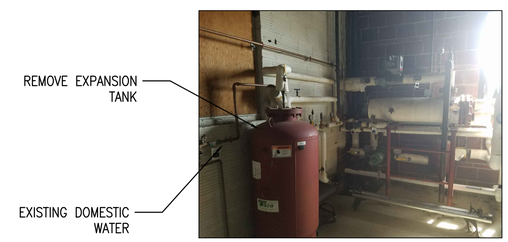

3 MD103 HEATING EQUIPMENT

NO SCALE

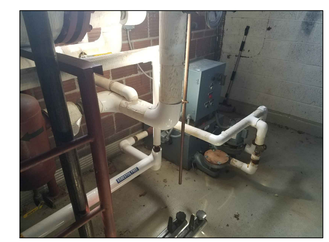

4 MD103 STEAM CONDENSATE PUMP

NO SCALE

BUILDING 49

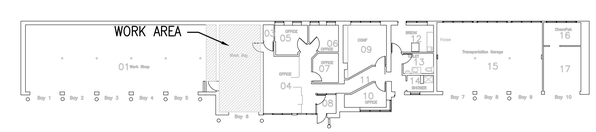

KEY PLAN

NAVSTA DRAWING NO. 44520-412

SYM	DESCRIPTION	DATE	APPR

NAVFAC

AMES & WHITAKER Architects

BID SET SUBMISSION

12/30/19

DES KWK	DRW GJC	CHK KWK
<<PM/EM>>	RC	
BRANCH MANAGER	XX	
CHIEF ENG/ARCH	XXX	
<<XXX>>	XX	

DEPARTMENT OF THE NAVY
NAVAL FACILITIES ENGINEERING COMMAND
NORTHEAST IPT
NAVAL FACILITIES ENGINEERING COMMAND ~ MID-ATLANTIC
NAVAL STATION - NORFOLK, VIRGINIA
NAVAL STATION NEWPORT
NEWPORT, RI

DECENTRALIZE STEAM AT BOILER PLANT A6

B49 MECHANICAL DEMOLITION PLAN

SCALE: AS NOTED
EPROJECT NO.: 1389839
CONSTR. CONTR. NO.
NAVFAC DRAWING NO. 12799461
SHEET 31 OF 65

MD103

DRAWFORM REVISION: 10 MARCH 2009

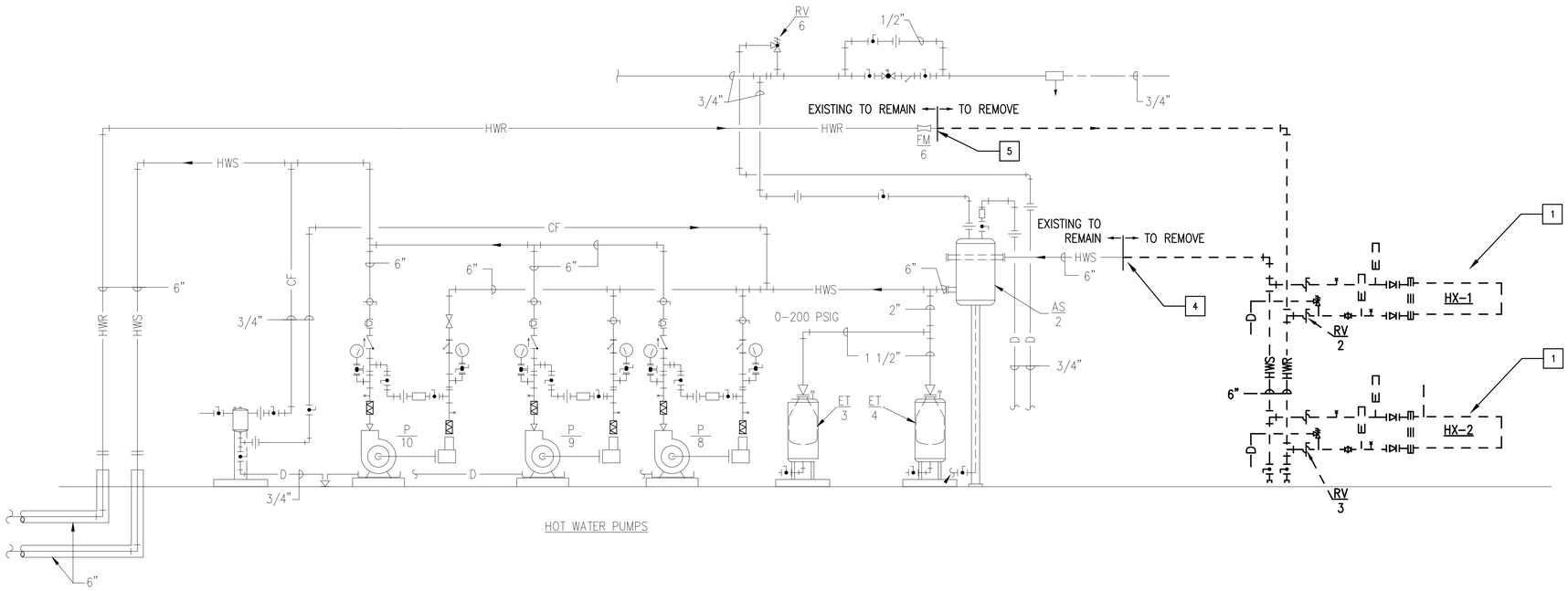

BUILDING 23A, EXISTING SCHEMATIC FLOW DIAGRAM – HYDRONIC HEATING SYSTEM

1 / MD600

NO SCALE

B23A DEMO WORK ITEMS

XX

1. REMOVE (2) STEAM HEAT EXCHANGERS AND ALL ASSOCIATED PIPING, CONTROLS & COMPONENTS. REMOVE CONTROLS UP TO EXISTING PANEL. REMOVE MOUNTING STRUCTURE.
2. REMOVE STEAM SUPPLY SYSTEM INCLUDING TRAPS, PRESSURE REDUCING STATION, PIPING, MOUTING & EQUIPMENT.
3. REMOVE CONDENSATE RETURN PUMP, ALL CONDENSATE RETURN PIPING, MOUNTING, AND ASSOCIATED EQUIPMENT.
4. REMOVE HWS PIPING BACK TO EXISTING AIR SEPARATOR.
5. REMOVE HWR PIPING UP TO EXISTING FLOW METER.

NAVSTA DRAWING NO. 44526-412

SYM	DESCRIPTION	DATE	APPR

NAVFAC

AMES & WHITAKER Architects

BID SET SUBMISSION

12/30/19

DES KWK | DRW GJG | CHK KWK

<<PM/DM>> RC

BRANCH MANAGER XX

CHIEF ENG/ARCH XXX

<<XXX>> XX

DEPARTMENT OF THE NAVY
NAVAL FACILITIES ENGINEERING COMMAND
NORTHEAST IPT
NAVAL FACILITIES ENGINEERING COMMAND ~ MID-ATLANTIC
NAVAL STATION NEWPORT
NAVAL STATION – NORFOLK, VIRGINIA
NEWPORT, RI

DECENTRALIZE STEAM AT BOILER PLANT A6

MECHANICAL DEMO PIPING DIAGRAMS

SCALE: AS NOTED

EPROJECT NO.: 1389839

CONSTR. CONTR. NO.

NAVFAC DRAWING NO. 12799467

SHEET 37 OF 65

MD600

DRAWFORM REVISION: 10 MARCH 2009

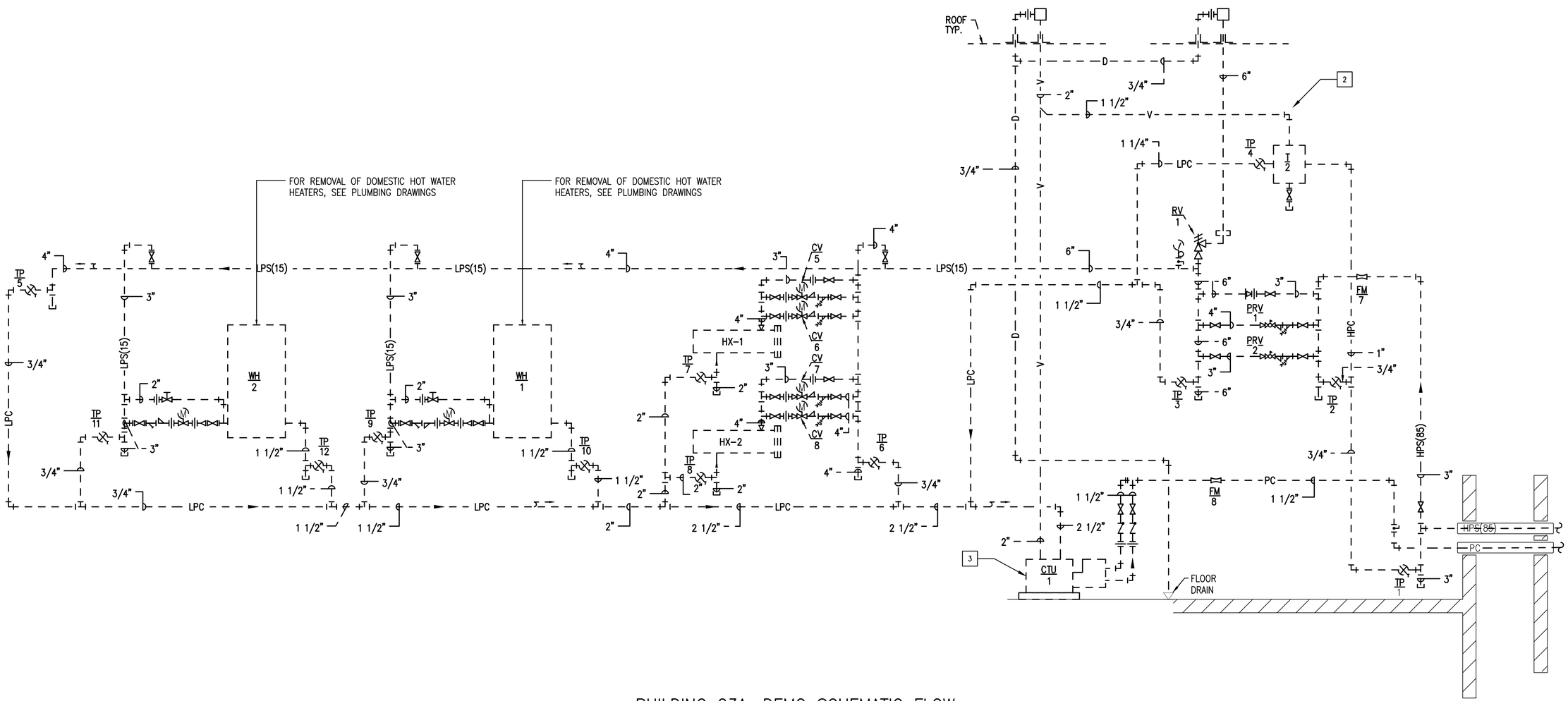

BUILDING 23A, DEMO SCHEMATIC FLOW DIAGRAM – STEAM/CONDENSATE SYSTEMS

1 / MD601

NO SCALE

B23A DEMO WORK ITEMS

XX

1. REMOVE (2) STEAM HEAT EXCHANGERS AND ALL ASSOCIATED PIPING, CONTROLS & COMPONENTS. REMOVE CONTROLS UP TO EXISTING PANEL. REMOVE MOUNTING STRUCTURE.
2. REMOVE STEAM SUPPLY SYSTEM INCLUDING TRAPS, PRESSURE REDUCING STATION, PIPING, MOUTING & EQUIPMENT.
3. REMOVE CONDENSATE RETURN PUMP, ALL CONDENSATE RETURN PIPING, MOUNTING, AND ASSOCIATED EQUIPMENT.
4. REMOVE HWS PIPING BACK TO EXISTING AIR SEPARATOR.
5. REMOVE HWR PIPING UP TO EXISTING FLOW METER.

NAVSTA DRAWING NO. 44527-412

SYM	DESCRIPTION	DATE	APPR

NAVFAC

AMES & WHITAKER Architects

BID SET SUBMISSION

12/30/19

DES KWK	DRW GJG	CHK KWK	
<<PM/DM>>	RC		
BRANCH MANAGER	XX		
CHIEF ENG/ARCH	XXX		
<<XXX>>	XX		

DEPARTMENT OF THE NAVY
NAVAL FACILITIES ENGINEERING COMMAND
NORTHEAST IPT

NAVAL FACILITIES ENGINEERING COMMAND – MIDATLANTIC
NAVAL STATION – NORFOLK, VIRGINIA

NAVAL STATION NEWPORT
NEWPORT, RI

DECENTRALIZE STEAM AT BOILER PLANT A6

MECHANICAL DEMO PIPING DIAGRAMS

SCALE: AS NOTED
EPROJECT NO.: 1389839
CONSTR. CONTR. NO.
NAVFAC DRAWING NO. 12799468
SHEET 38 OF 65

MD601

DRAWFORM REVISION: 10 MARCH 2009

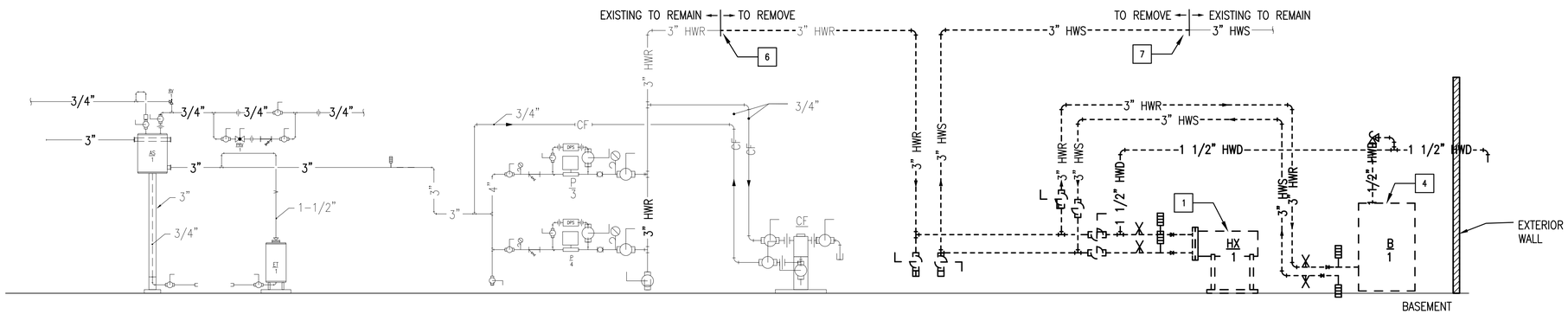

BUILDING 43, EXISTING SCHEMATIC FLOW DIAGRAM – HYDRONIC HEATING SYSTEM

1 / MD602

NO SCALE

B43 DEMO WORK ITEMS

1. REMOVE STEAM HEAT EXCHANGERS AND ALL ASSOCIATED PIPING, CONTROLS, COMPONENTS & ANY ELECTRICAL WIRING.
2. REMOVE STEAM SUPPLY SYSTEM COMPLETELY INCLUDING TRAPS AND PRESSURE REDUCING STATION. CAP STEAM AND CONDENSATE PIPES AT FOUNDATION.
3. REMOVE CONDENSATE RETURN PUMPS & ALL CONDENSATE RETURN PIPING, HANGERS, AND ASSOCIATED EQUIPMENT.
4. REMOVE BOILER AND ALL ASSOCIATED PIPING, CONTROLS, & ELECTRICAL WIRING. REMOVE ELECTRICAL WIRING.
5. REMOVE FLASH TANK & ASSOCIATED VALVES AND PIPING.
6. REMOVE INCOMING PIPING OF HOT WATER RETURN.
7. REMOVE HOT WATER SUPPLY PIPING BACK TO HEADER.

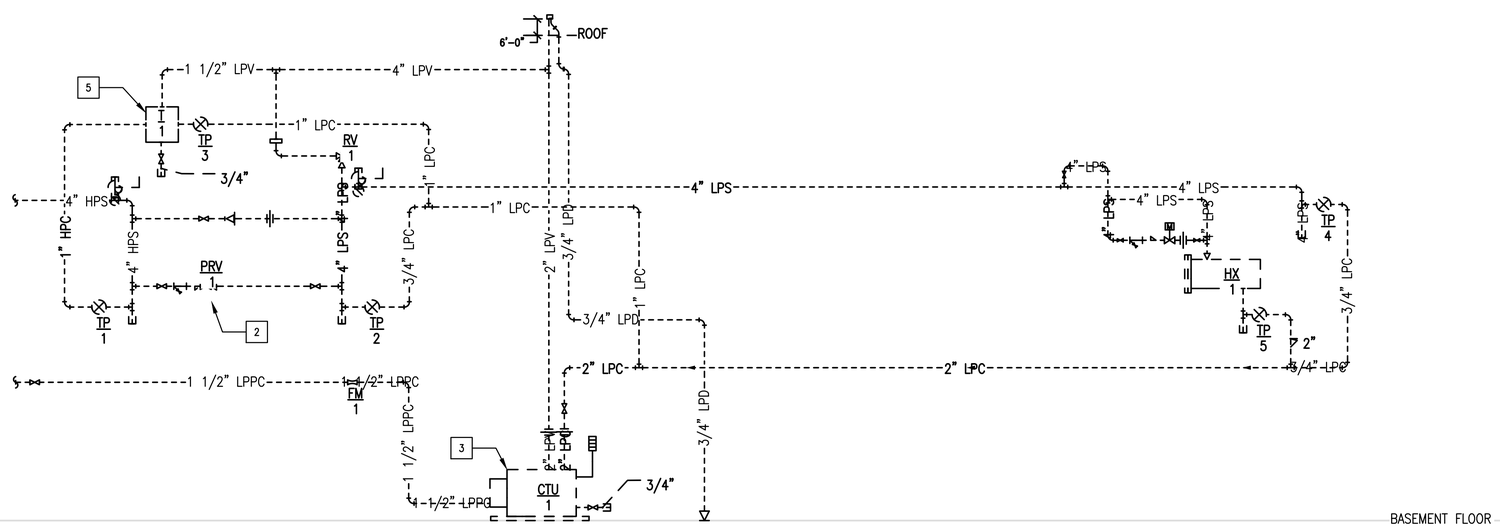

BUILDING 43, EXISTING SCHEMATIC FLOW DIAGRAM – STEAM/CONDENSATE SYSTEM

2 / MD602

NO SCALE

NAVSTA DRAWING NO. 44528-412

SYM	DESCRIPTION	DATE	APPR

NAVFAC

AMES & WHITAKER Architects

BID SET SUBMISSION

12/30/19

DES KWK	DRW GJG	CHK KWK
<<PM/DM>>	RC
BRANCH MANAGER	XX
CHIEF ENG/ARCH	XXX
<<XXX>>	XX

DEPARTMENT OF THE NAVY
NAVAL FACILITIES ENGINEERING COMMAND
NORTHEAST IPT
NAVAL FACILITIES ENGINEERING COMMAND ~ MID-ATLANTIC
NAVAL STATION – NORFOLK, VIRGINIA
NAVAL STATION NEWPORT
NEWPORT, RI

DECENTRALIZE STEAM AT BOILER PLANT A6

MECHANICAL DEMO PIPING DIAGRAMS

SCALE: AS NOTED

EPROJECT NO.: 1389839

CONSTR. CONTR. NO.

NAVFAC DRAWING NO. 12799469

SHEET 39 OF 65

MD602

DRAWFORM REVISION: 10 MARCH 2009

B44 DEMO WORK ITEMS

XX

1. REMOVE STEAM HEAT EXCHANGER AND ALL ASSOCIATED PIPING, CONTROLS, COMPONENTS & ANY ELECTRICAL WIRING. REMOVE MOUNTING STRUCTURE.
2. REMOVE STEAM SUPPLY SYSTEM COMPLETELY INCLUDING TRAPS & PRESSURE REDUCING STATION
3. REMOVE CONDENSATE RETURN PUMPS & ALL CONDENSATE RETURN PIPING, HANGERS, AND ASSOCIATED EQUIPMENT
4. REMOVE PUMPS INCLUDING ISOLATION VALVES, & ELECTRICAL WIRING BACK TO PANEL.
5. REMOVE HOT WATER RETURN PIPING BACK TO FLANGE. REMOVE HOT WATER SUPPLY PIPING.
6. REMOVE EXPANSION TANK INCLUDING ALL PIPING & CONNECTIONS. EQUIPMENT PAD TO REMAIN.

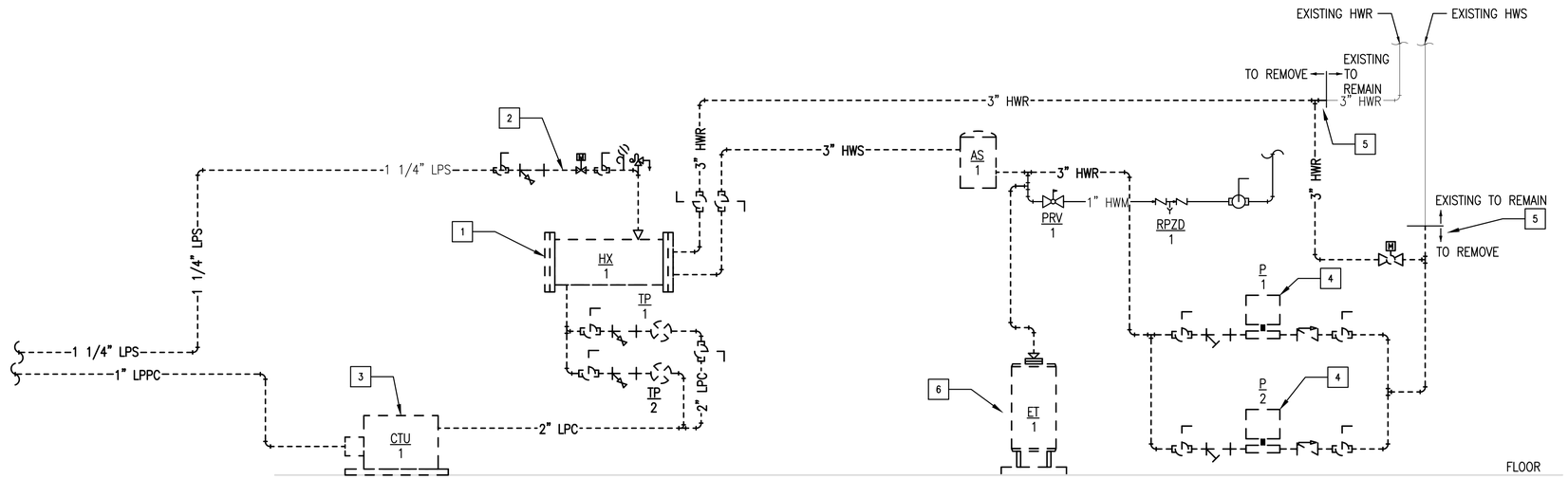

1 / M603 BUILDING 44, EXISTING SCHEMATIC FLOW DIAGRAM – HYDRONIC HEATING SYSTEM

NO SCALE

B49 DEMO WORK ITEMS

XX

1. REMOVE STEAM HEAT EXCHANGER AND ALL ASSOCIATED PIPING, CONTROLS, COMPONENTS & ANY ELECTRICAL WIRING.
2. REMOVE STEAM SUPPLY SYSTEM INCLUDING TRAPS, PRESSURE REDUCING STATION
3. REMOVE CONDENSATE RETURN PUMPS & ALL CONDENSATE RETURN PIPING, HANGERS, AND ASSOCIATED EQUIPMENT.
4. REMOVE CIRCULATOR PUMP & ELECTRICAL BACK TO SOURCE PANEL.
5. REMOVE ALL HOT WATER SUPPLY AND RETURN PIPING TO EXISTING RISER MAIN.
6. REMOVE EXPANSION TANK INCLUDING ALL PIPING & CONNECTIONS.

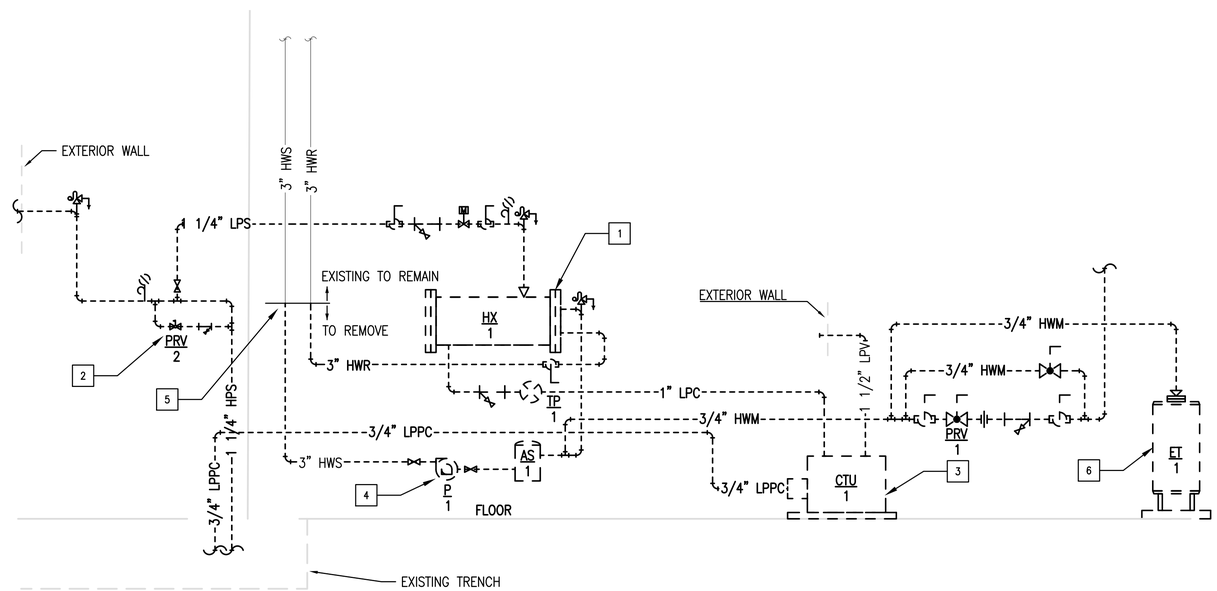

2 / M603 BUILDING 49, EXISTING SCHEMATIC FLOW DIAGRAM – HYDRONIC HEATING SYSTEM

NO SCALE

NAVSTA DRAWING NO. 44529–412

APPR	DATE	DESCRIPTION
SYM		

NAVFAC

AMES & WHITAKER Architects

BID SET SUBMISSION

12/30/19

DES KWK | DRW GJG | CHK KWK

<<PM/DM>> RC

BRANCH MANAGER XX

CHIEF ENG/ARCH XXX

<<XXX>> XX

DEPARTMENT OF THE NAVY
NAVAL FACILITIES ENGINEERING COMMAND
NORTHEAST IPT

NAVAL FACILITIES ENGINEERING COMMAND ~ MID-ATLANTIC
NAVAL STATION – NORFOLK, VIRGINIA

NAVAL STATION NEWPORT
NEWPORT, RI

DECENTRALIZE STEAM AT BOILER PLANT A6

MECHANICAL DEMO PIPING DIAGRAMS

SCALE: AS NOTED

EPROJECT NO.: 1389839

CONSTR. CONTR. NO.

NAVFAC DRAWING NO. 12799470

SHEET 40 OF 65

MD603

DRAWFORM REVISION: 10 MARCH 2009

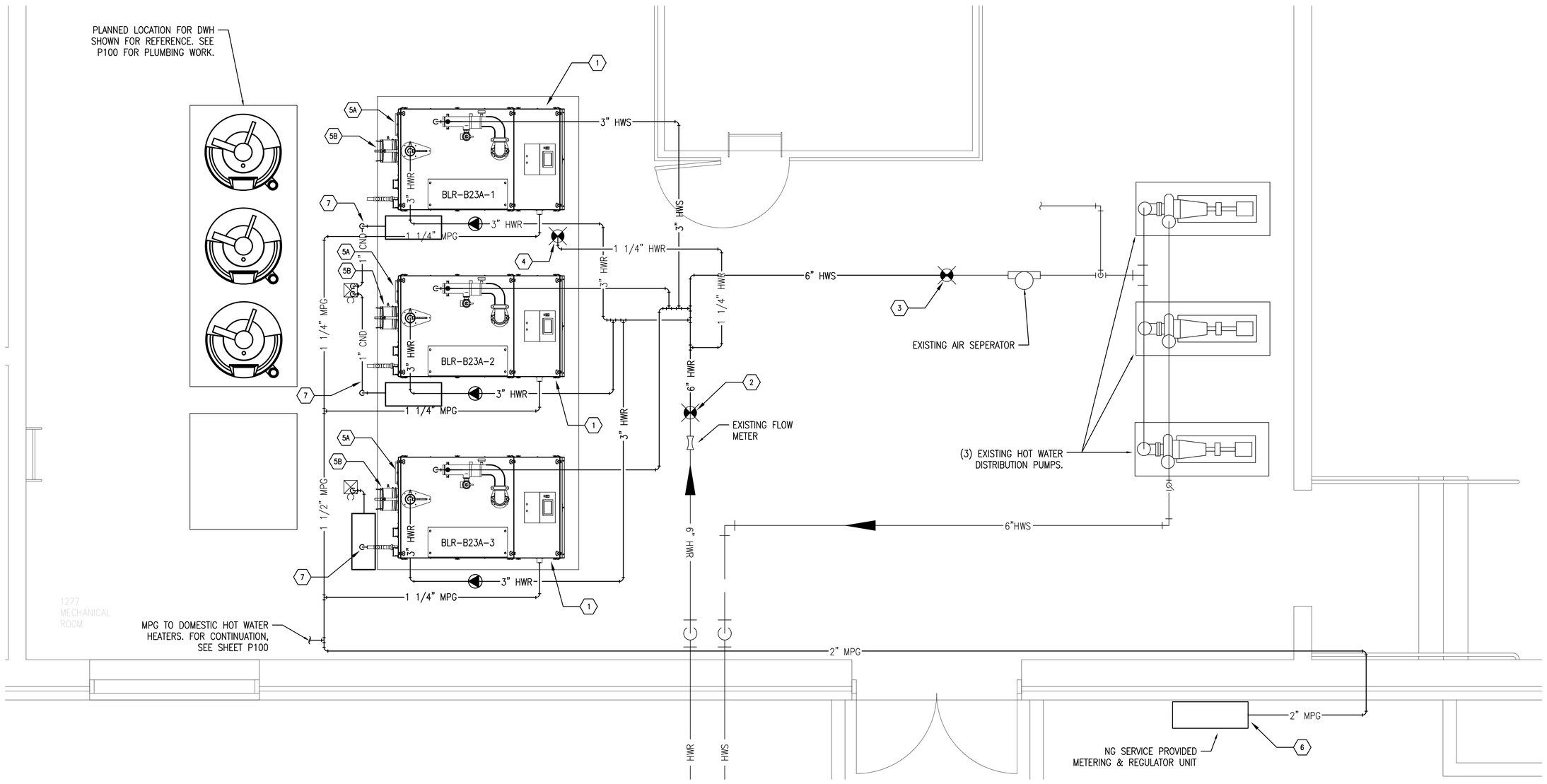

B23A WORK ITEMS (XX)

1. PROVIDE (3) GAS BOILERS.
2. PROVIDE HWR TO EXISTING RETURN MAIN 6".
3. PROVIDE HWS TO EXISTING SUPPLY MAIN 6".
4. PROVIDE RETURN LINE TO EXISTING
5A. PROVIDE COMBUSTIN AIR INTAKE PIPING UP TO ROOF. SEE ELEVATION VIEWS ON M101 FOR PROPOSED ROUTING.
5B. PROVIDE EXHAUST VENT PIPING UP TO ROOF. SEE ELEVATION VIEWS ON M101 FOR PROPOSED ROUTING.
6. PROVIDE GAS PIPING ALONG INTERIOR WALL. PROVIDE PENETRATIONS WHERE NEEDED. CONNECT TO METER AT EXTERIOR.
7. PROVIDE CONDENSATE NEUTRALIZATION KIT AND CONDENSATE PIPING TERMINATED AT FLOOR DRAIN.

B23A CONSTRUCTION SEQUENCE

HEATING PLANT IS OPERATIONAL YEAR ROUND. THE REPLACEMENT HOT WATER HEATING EQUIPMENT SHALL BE INSTALLED & OPERATIONAL BEFORE THE EXISTING STEAM PLANT IS SHUTDOWN AND REMOVED. CONSTRUCTION SHALL BE PERFORMED IN THE ORDER DETAILED BELOW TO ENSURE MINIMAL CHANGEOVER TIME.

1. RELOCATE MEDVAC UNIT AND PROVIDE SYSTEM CONNECTIONS TO TEMPORARY LOCATION. THE PLANNED PERMANENT LOCATION FOR THE MEDVAC UNIT IS LOCATED ABOVE A CONDENSATE DRAINAGE TRENCH. THIS TRENCH CAN ONLY BE FILLED WHEN ALL STEAM EQUIPMENT IS REMOVED.
2. INSTALL REPLACEMENT DOMESTIC HOT WATER HEATERS AND HEATING BOILERS.
2. INSTALL GAS SERVICE.
3. CHANGE OVER TO NEW EQUIPMENT.
4. REMOVE STEAM EQUIPMENT
5. RELOCATE MEDVAC UNIT TO PERMANENT LOCATION ONCE CONDENSATE DRAINAGE TRENCH IS FILLED.

1 / M100 BUILDING 23A PARTIAL FLOOR PLAN

SCALE: 1/2" = 1'-0" (0, 1', 2', 4')

BUILDING 23A

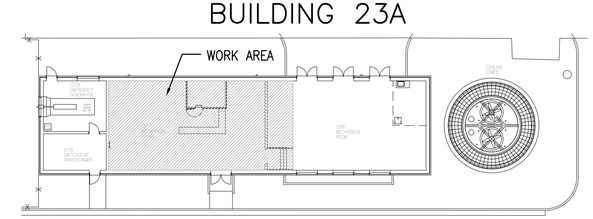

KEY PLAN

NAVSTA DRAWING NO. 44530-412

			APPR
			DATE
			DESCRIPTION
			SYM

NAVFAC

AMES & WHITAKER Architects

BID SET SUBMISSION

12/30/19

DES KWK	DRW GJC	CHK KWK	
<<PM/DM>>	RC		
BRANCH MANAGER	XX		
CHIEF ENG/ARCH	XXX		
<<XXX>>	XX		

NAVAL FACILITIES ENGINEERING COMMAND
NAVAL STATION – NORFOLK, VIRGINIA

DEPARTMENT OF THE NAVY
NAVAL FACILITIES ENGINEERING COMMAND ~ MID-ATLANTIC
NORTHEAST PT

NAVAL STATION NEWPORT
NEWPORT, RI

DECENTRALIZE STEAM AT BOILER PLANT A6

B23A MECHANICAL PLAN

SCALE: AS NOTED
EPROJECT NO.: 1389839
CONSTR. CONTR. NO.
NAVFAC DRAWING NO. 12799471
SHEET 41 OF 65

M100

DRAWFORM REVISION: 10 MARCH 2009

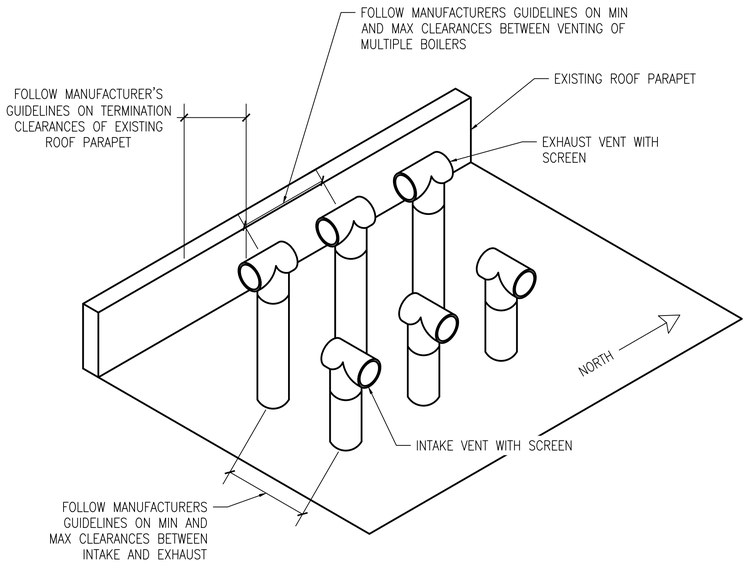

BUILDING 23A ROOF TERMINATION DETAIL

2 / M101

NO SCALE

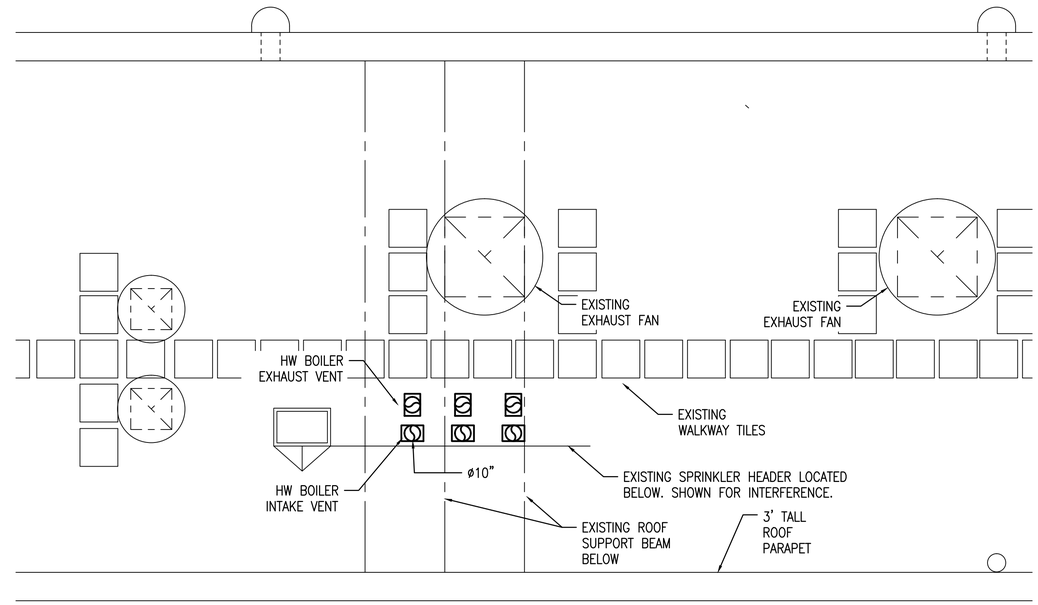

BUILDING 23A PARTIAL ROOF PLAN

1 / M101

SCALE: 1/4" = 1'-0" (0, 2', 4', 8')

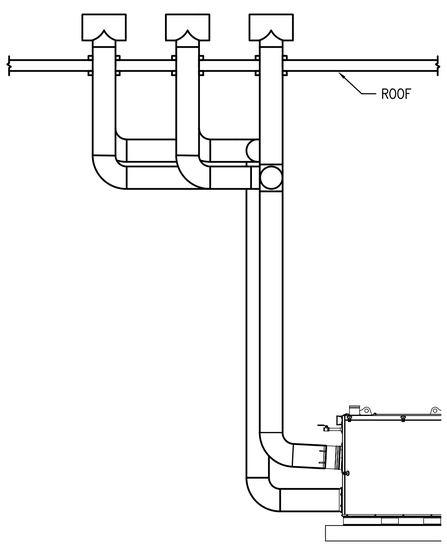

FLUE/INTAKE WEST VIEW

3 / M101

NO SCALE

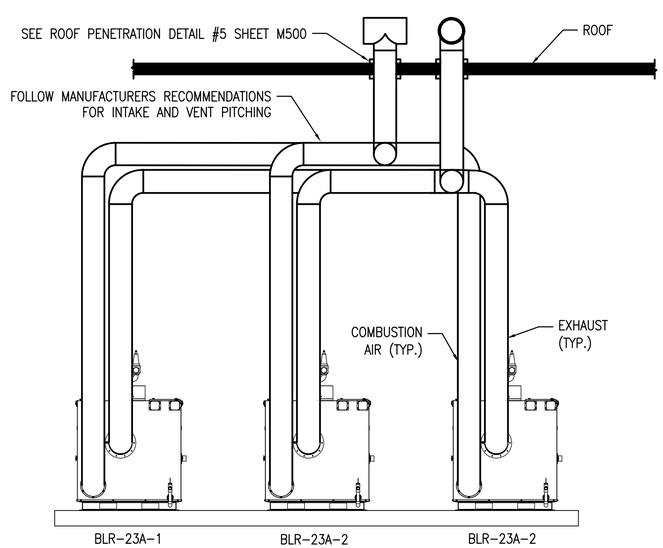

FLUE/INTAKE NORTH VIEW

4 / M101

NO SCALE

BUILDING 23A

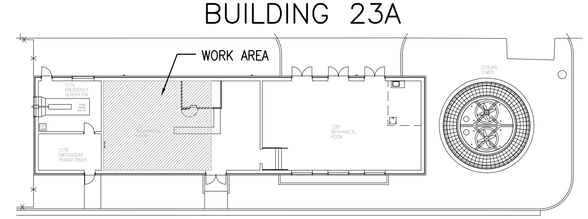

KEY PLAN

NAVSTA DRAWING NO. 44531-412

APPR	
DATE	
DESCRIPTION	
SYM	

NAVFAC

AMES & WHITAKER Architects

BID SET SUBMISSION

12/30/19

DES KWK	DRW GJG	CHK KWK	
<<PM/DM>>	RC		
BRANCH MANAGER	XX		
CHIEF ENG/ARCH	XXX		
<<XXX>>	XX		

DEPARTMENT OF THE NAVY
NAVAL FACILITIES ENGINEERING COMMAND
NORTHEAST IPT
NAVAL FACILITIES ENGINEERING COMMAND ~ MID-ATLANTIC
NAVAL STATION – NORFOLK, VIRGINIA
NAVAL STATION NEWPORT
NEWPORT, RI

DECENTRALIZE STEAM AT BOILER PLANT A6

B23A MECHANICAL PLAN

SCALE: AS NOTED

EPROJECT NO.: 1389839

CONSTR. CONTR. NO.

NAVFAC DRAWING NO. 12799472

SHEET 42 OF 65

M101

DRAWFORM REVISION: 10 MARCH 2009

B43 WORK ITEMS (XX)

1. PROVIDE CONNECTION TO HOT WATER PIPING FROM PUMP TO SYSTEM EXISTING SUPPLY.
2. PROVIDE (3) BOILERS. SEE MECHANICAL SCHEDULES SHEET M608.
4. PROVIDE 3" HWS TO EXISTING AIR SEPARATOR INLET.
5. PROVIDE 3" HWR TO BOILERS.
6. PROVIDE CONNECTION TO BRANCH EQUIPMENT RETURN PIPING FOR (2) UNIT HEATERS.
7. GAS PIPING: PROVIDE METER & SHUTOFF VALVES AT EXTERIOR ON 1ST FLOOR. PIPING TO ENTER BUILDING INTO LOUVERED SPACE AND PIPED DOWN THROUGH FLOOR TO BOILERS. SEE SHEET M601 FOR ADDITIONAL NOTES & REQUIREMENTS.
8. PROVIDE (3) 4" INTAKE VENTS AND (3) 4" EXHAUST VENTS UP THROUGH EXISTING FLOOR PENETRATION TO LOUVERED SPACE ON 1ST FLOOR. RUNT INTAKES & EXHAUST VENTS THROUGH EXTERIOR WALL BELOW LOUVER. INTAKE VENTS SHALL BE PROVIDED WITH A 90° DOWNWARD ELBOW & SCREEN. EXHAUST VENTS SHALL VENT HORIZONTALLY WITH A SCREEN. PITCH INTAKE AND VENTS TO MANUFACTURES RECOMMENDATION.
9. CREATE A TEMPORARY OPENING IN WALL FOR MAN ACCESS TO THE LOUVERED SPACE ON 1ST FLOOR. COORDINATE WITH NAVY TO MOVE THE EXISTING TROPHY CASE PRIOR TO WORK. WHEN WORK IS COMPLETED, REPAIR HOLE AND PAINT TO MATCH EXISTING WALL.
10. EXISTING BOARD & SEAL BACK OF LOUVER.

B43 CONSTRUCTION SEQUENCE

HEATING PLANT IS OPERATIONAL YEAR ROUND. NEW EQUIPMENT SHALL BE INSTALLED WHERE EXISTING AUX BOILER IS LOCATED. THE AUX BOILER IS NOT CURRENTLY BEING USED. THE NEW EQUIPMENT SHALL BE & OPERATIONAL BEFORE EXISTING STEAM HEAT PLANT IS REMOVED.

1. REMOVE AUX BOILER & DIESEL TANKS
2. INSTALL NEW BOILERS & EQUIPMENT
2. CONNECT TO GAS SERVICE
3. CHANGE OVER TO NEW EQUIPMENT
4. REMOVE REMAINING EXISTING EQUIPMENT AS SHOWN

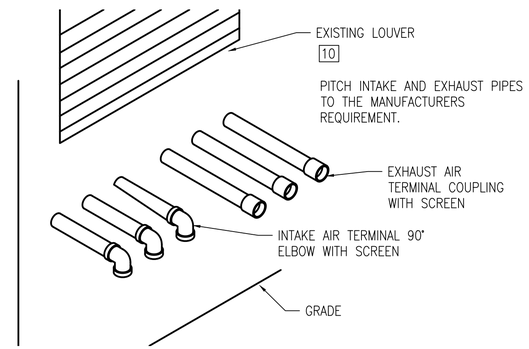

3 / M102 BUILDING 43 EXTERIOR VENTING DETAIL

NO SCALE

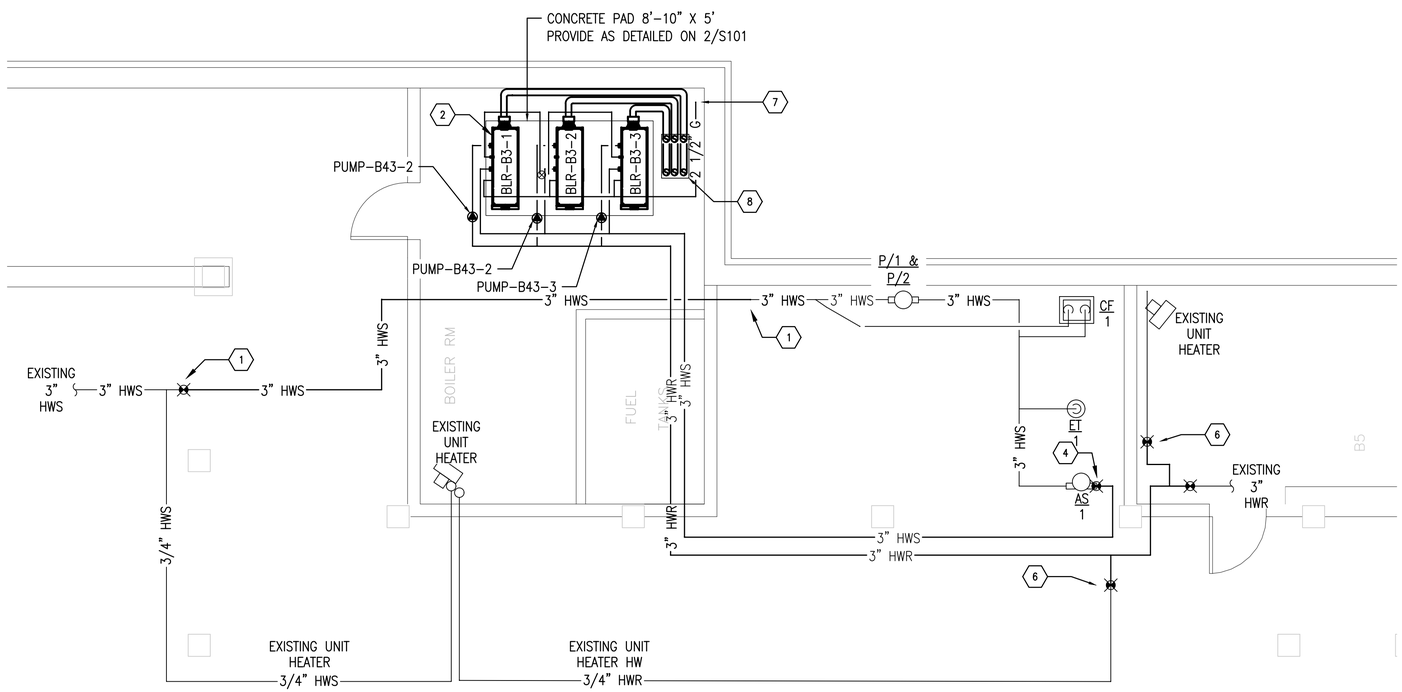

1 / M102 BUILDING 43 PARTIAL FLOOR PLAN

SCALE: 1/4" = 1'-0" (0, 2', 4', 8')

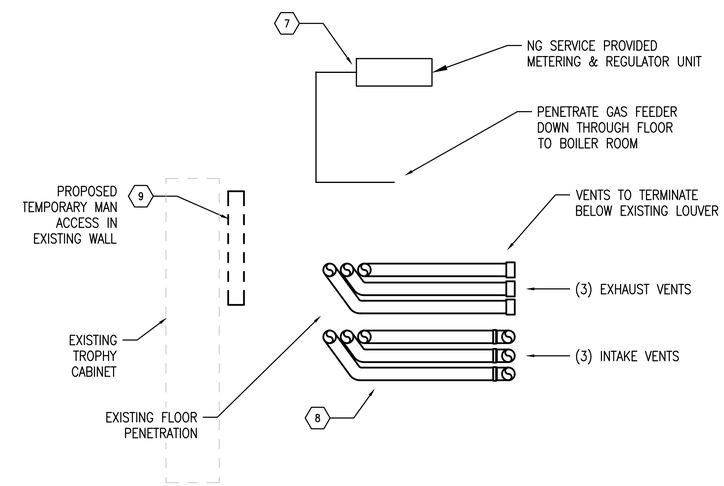

2 / M102 BUILDING 43 PARTIAL 1ST FLOOR PLAN

SCALE: 1/2" = 1'-0" (0, 1', 2', 4')

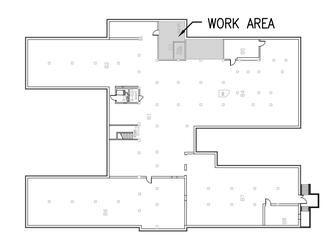

BUILDING 43 KEY PLAN

SYM	DESCRIPTION	DATE	APPR

NAVFAC

AMES & WHITAKER Architects

BID SET SUBMISSION

12/30/19

DES	KWK	DRW	GJG	CHK	KWK
<<PM/DM>>			RC		
BRANCH MANAGER			XX		
CHIEF ENG/ARCH			XXX		
<<<>>>			XX		

DEPARTMENT OF THE NAVY
NAVAL FACILITIES ENGINEERING COMMAND ~ MID-ATLANTIC
NORTHEAST IPT
NAVAL FACILITIES ENGINEERING COMMAND
NAVAL STATION – NORFOLK, VIRGINIA
NAVAL STATION NEWPORT
NEWPORT, RI

DECENTRALIZE STEAM AT BOILER PLANT A6

B43 MECHANICAL PLAN

SCALE: AS NOTED
EPROJECT NO.: 1389839
CONSTR. CONTR. NO.
NAVFAC DRAWING NO. 12799473
SHEET 43 OF 65

M102

NAVSTA DRAWING NO. 44532-412

DRAWFORM REVISION: 10 MARCH 2009

B44 WORK ITEMS (XX)

1. PROVIDE (3) BOILERS. SEE MECHANICAL SCHEDULES SHEET M608.
2. PROVIDE AIR SEPARATOR
3. PROVIDE EXPANSION TANK.
4. PROVIDE CONNECTION FOR MAKEUP WATER TO EXISTING BACKFLOW PREVENTER.
5. PROVIDE CONNECTION FROM HWS TO EXISTING SUPPLY MAIN 3".
6. PROVIDE CONNECTION HWR TO EXISTING RETURN MAIN 3".
7. PROVIDE GAS MAIN. CONNECT TO METER & SHUTOFF VALVES AT EXTERIOR ON EAST SIDE OF BUILDING. PIPING SHALL BE ROUTED ALONG CEILING INTO MECHANICAL SPACE
8. PROVIDE AND RUN (3) 4" INTAKE VENTS AND (3) 4" EXHAUST VENTS TO EXTERIOR HORIZONTALLY. INTAKE VENTS SHALL BE PROVIDED WITH A 90° DOWNWARD ELBOW & SCREEN. EXHAUST VENTS SHALL VENT HORIZONTALLY WITH A SCREEN. SEE DETAIL 3 THIS SHEET.

B44 CONSTRUCTION SEQUENCE

HEATING PLANT IS OPERATIONAL YEAR ROUND. REPLACEMENT EQUIPMENT SHALL BE INSTALLED & OPERATIONAL BEFORE EXISTING IS REMOVED.

1. INSTALL REPLACEMENT EQUIPMENT.
2. INSTALL GAS SERVICE.
3. CHANGE OVER TO REPLACEMENT EQUIPMENT
4. REMOVE EXISTING EQUIPMENT AS SHOWN.

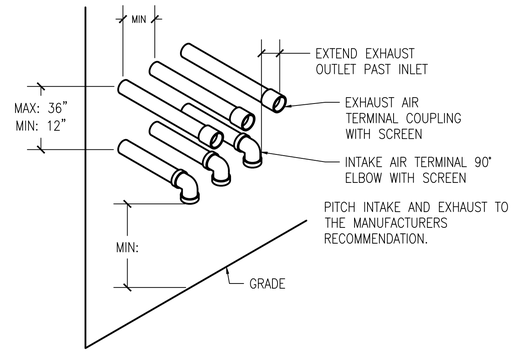

3 / M103 BUILDING 44 EXTERIOR VENTING DETAIL

NO SCALE

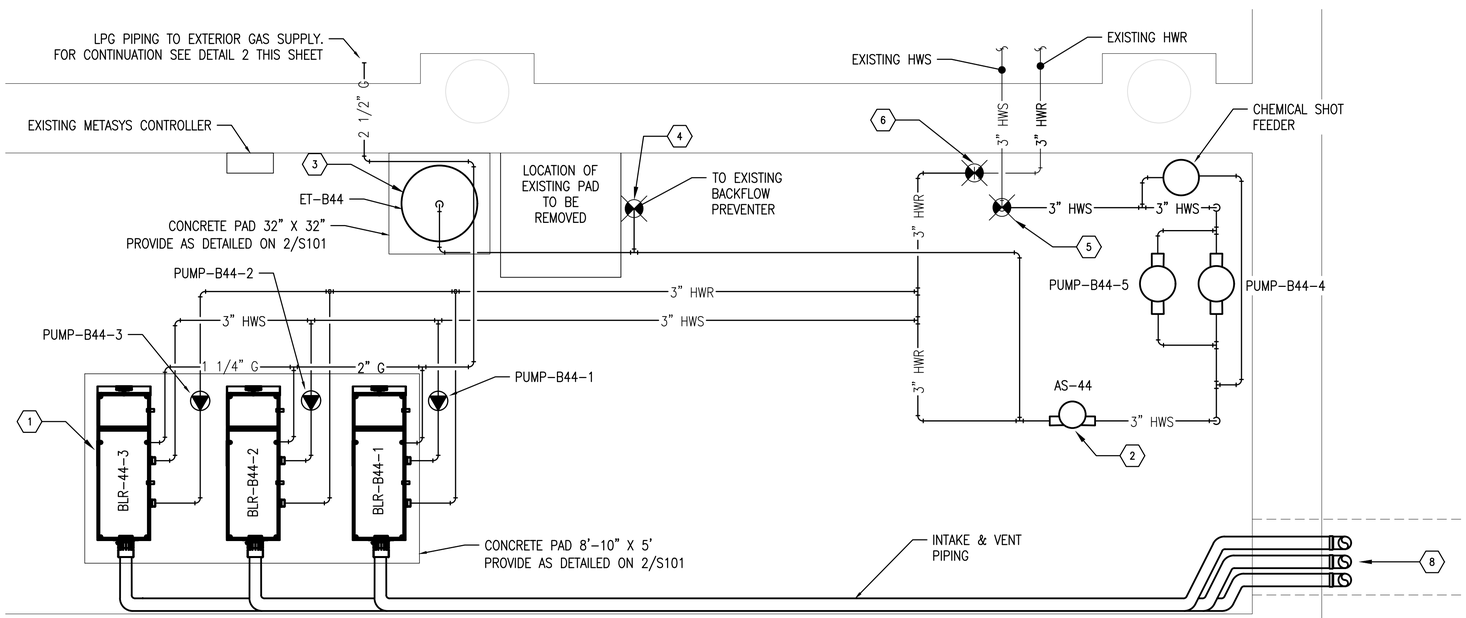

1 / M103 BUILDING 44 PARTIAL FLOOR PLAN

SCALE: 1/2" = 1'-0" (0, 1', 2', 4')

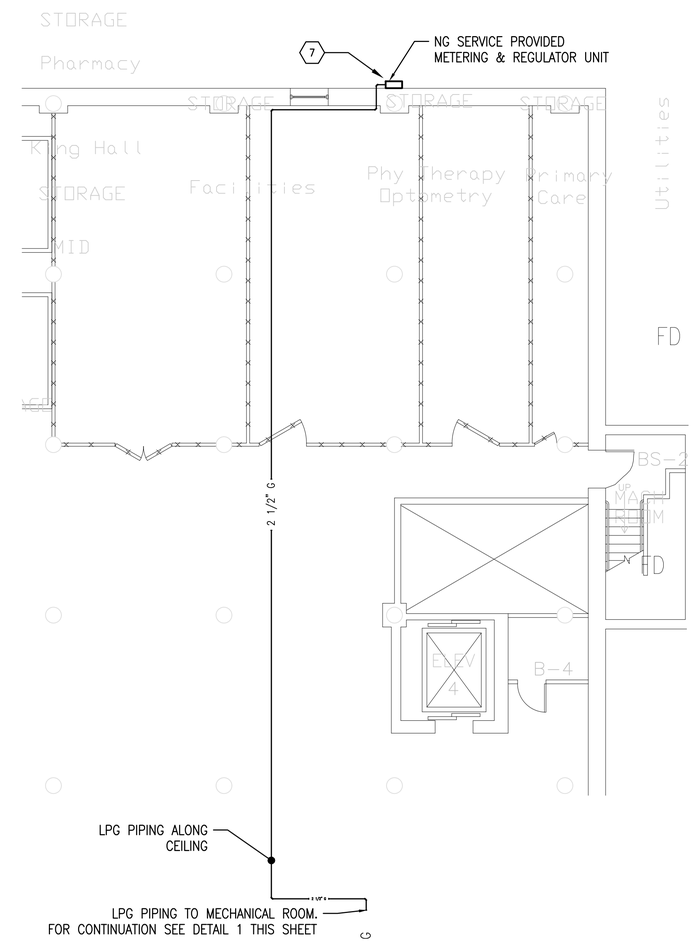

2 / M103 BUILDING 44 PARTIAL FLOOR PLAN

SCALE: 1/8" = 1'-0" (0, 4', 8', 16')

BUILDING 44

KEY PLAN

NAVSTA DRAWING NO. 44533-412

SYM	DESCRIPTION	DATE	APPR

NAVFAC

AMES & WHITAKER Architects

BID SET SUBMISSION

12/30/19

DES KWK	DRW GJG	CHK KWK
<<PM/DM>>	RC	
BRANCH MANAGER	XX	
CHIEF ENG/ARCH	XXX	
<<XX>>	XX	

DEPARTMENT OF THE NAVY
NAVAL FACILITIES ENGINEERING COMMAND ~ MID-ATLANTIC
NORTHEAST IPT
NAVAL FACILITIES ENGINEERING COMMAND ~ MID-ATLANTIC
NAVAL STATION ~ NORFOLK, VIRGINIA
NAVAL STATION NEWPORT
NEWPORT, RI

DECENTRALIZE STEAM AT BOILER PLANT A6

B44 MECHANICAL PLAN

SCALE: AS NOTED

EPROJECT NO.: 1389839

CONSTR. CONTR. NO.

NAVFAC DRAWING NO. 12799474

SHEET 44 OF 65

M103

DRAWFORM REVISION: 10 MARCH 2009

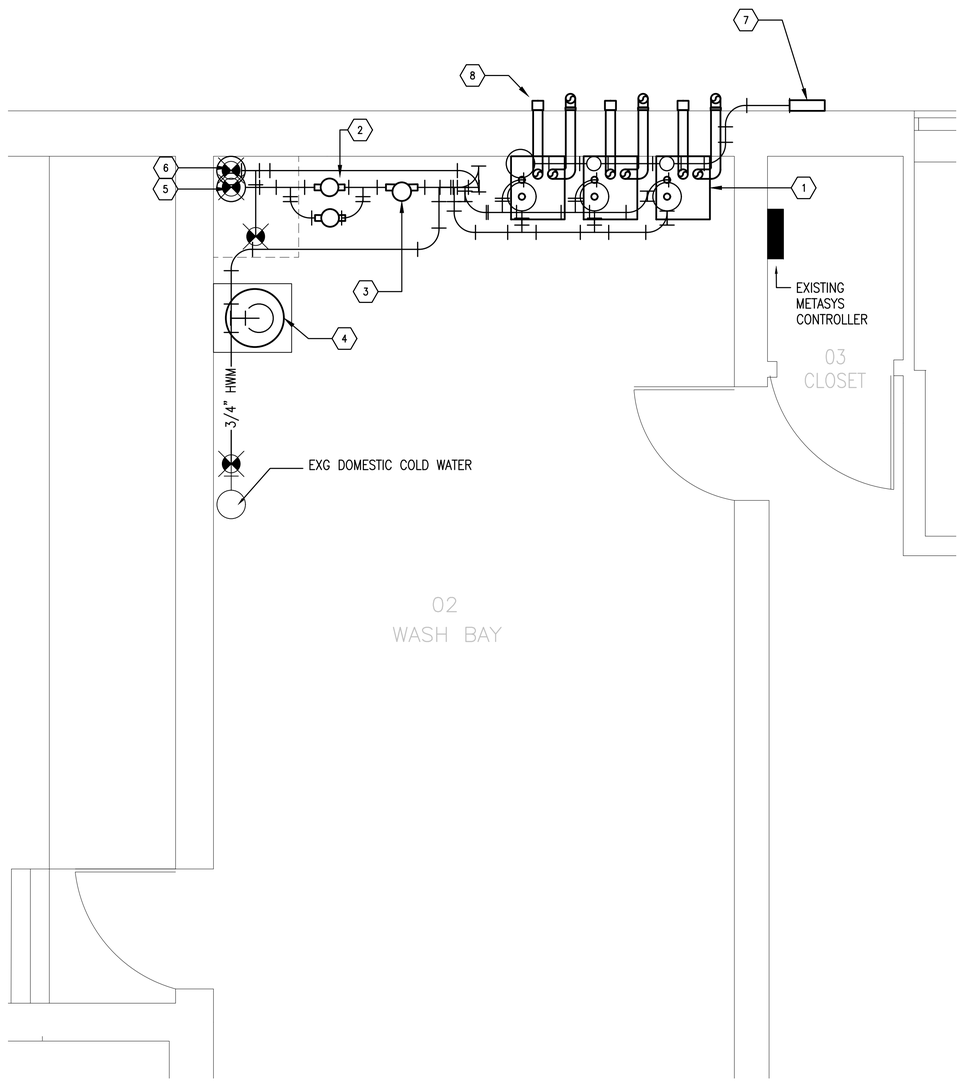

1 / M104 BUILDING 49
PARTIAL FLOOR PLAN

SCALE: 1/2" = 1'-0" 0 1' 2' 4'

B43 CONSTRUCTION SEQUENCE

HEATING PLANT IS INACTIVE DURING THE SUMMER. REPLACEMENT EQUIPMENT SHALL BE INSTALLED IN THE SAME LOCATION AS THE EXISTING EQUIPMENT.

1. INSTALL GAS SERVICE.
2. REMOVE EXISTING EQUIPMENT AS SHOWN.
3. INSTALL REPLACEMENT EQUIPMENT.
4. CHANGE OVER TO REPLACEMENT EQUIPMENT

B49 WORK ITEMS (XX)

1. PROVIDE (3) BOILERS. MOUNTED ON WALL. SEE MECHANICAL SCHEDULES ON SHEET M608
2. PROVIDE (2) DISTRIBUTION PUMPS. PROVIDE CONCRETE EQUIPMENT PAD. SEE MECHANICAL SCHEDULES.
3. PROVIDE AIR SEPARATOR. SEE MECHANICAL SCHEDULES.
4. PROVIDE EXPANSION TANK ON EXISTING EQUIPMENT PAD. SEE MECHANICAL SCHEDULES.
5. PROVIDE CONNECTION FOR HWS TO EXISTING SUPPLY MAIN.
6. PROVIDE CONNECTION FOR HWR TO EXISTING RETURN MAIN
7. PROVIDE GAS MAIN AND CONNECTION FROM METER & SHUTOFF VALVE AT EXTERIOR TO BOILERS. SEE LPG PIPING RISER ON SHEET M604 FOR ADDITIONAL REQUIREMENTS AND NOTES.
8. PROVIDE AND ROUTE INTAKE AND EXHAUST VENTS HORIZONTALLY THROUGH EXTERIOR WALL. INTAKE VENTS SHALL BE PROVIDED WITH A 90° DOWNWARD ELBOW & SCREEN. EXHAUST VENTS SHALL VENT HORIZONTALLY WITH A SCREEN. PITCH TO MANUFACTURERS REQUIREMENT.

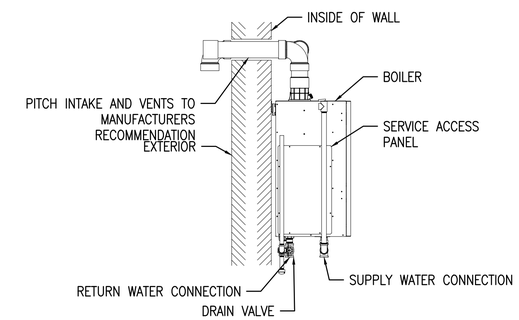

2 / M104 BOILER HORIZONTAL VIEW

NO SCALE

BUILDING 49

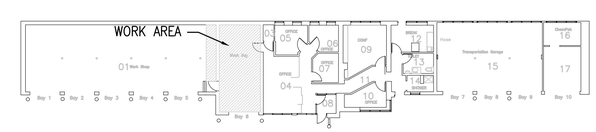

KEY PLAN

NAVSTA DRAWING NO. 44534-412

SYM	DESCRIPTION	DATE	APPR

NAVFAC

AMES & WHITAKER Architects

BID SET SUBMISSION

12/30/19

DES KWK	DRW GJC	CHK KWK	
<<PM/DM>>	RC		
BRANCH MANAGER	XX		
CHIEF ENG/ARCH	XXX		
<<XXX>>	XX		

DEPARTMENT OF THE NAVY
NAVAL FACILITIES ENGINEERING COMMAND
NORTHEAST PT
NAVAL FACILITIES ENGINEERING COMMAND ~ MID-ATLANTIC
NAVAL STATION – NORFOLK, VIRGINIA
NAVAL STATION NEWPORT
NEWPORT, RI

DECENTRALIZE STEAM AT BOILER PLANT A6

B49 MECHANICAL PLAN

SCALE: AS NOTED
EPROJECT NO.: 1389839
CONSTR. CONTR. NO.
NAVFAC DRAWING NO. 12799475
SHEET 45 OF 65

M104

DRAWFORM REVISION: 10 MARCH 2009

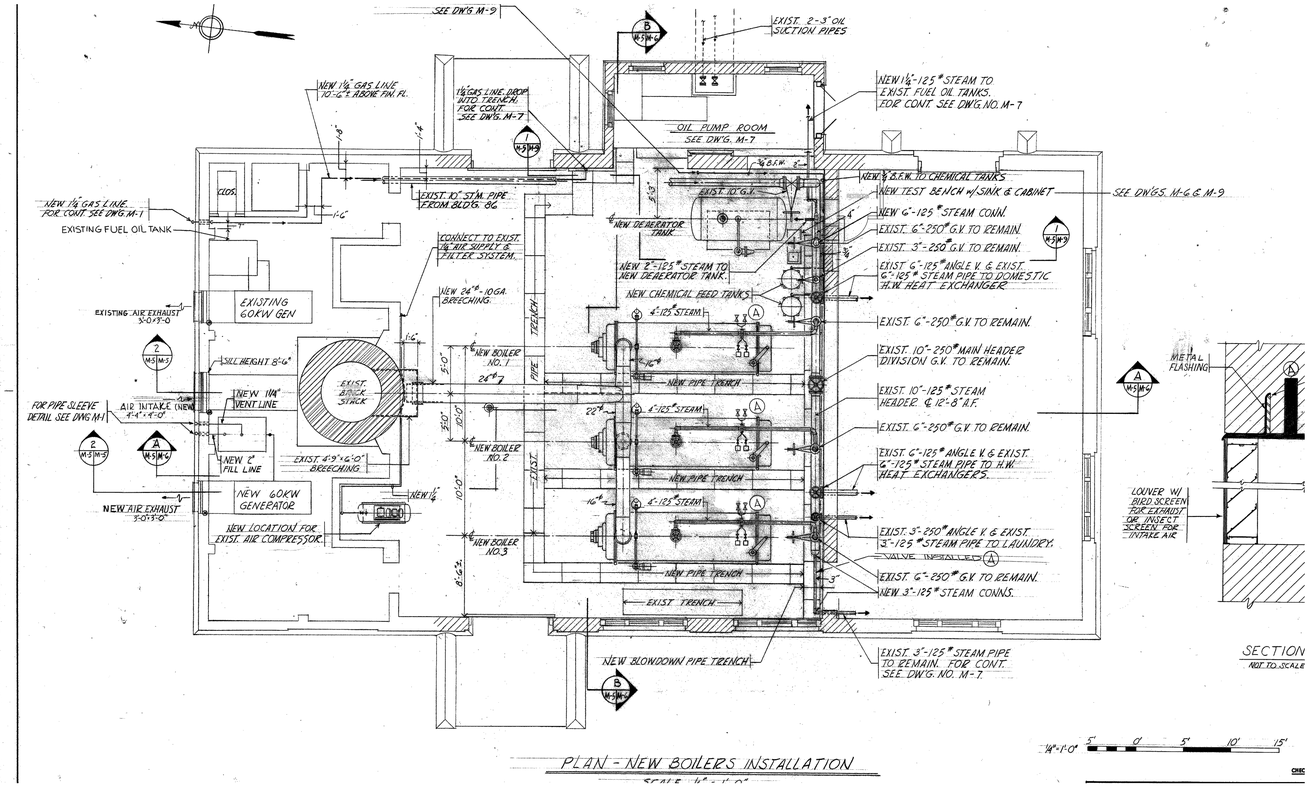

PLAN - NEW BOILERS INSTALLATION

1 / M105 BUILDING A6 FLOOR PLAN

SCALE: 1/8" = 1'-0"

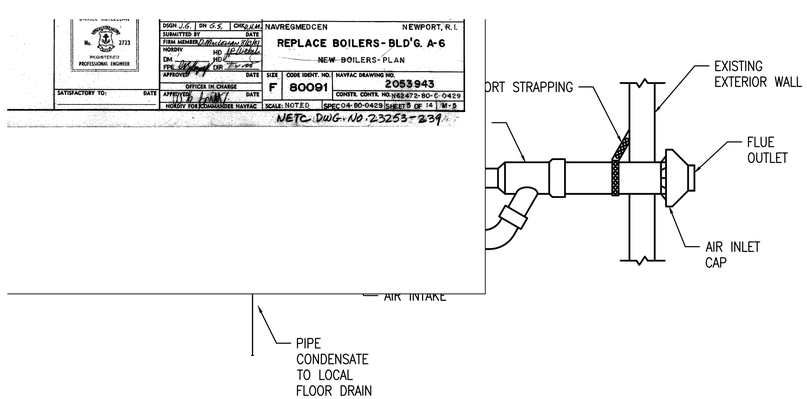

3 / M105 UNIT HEATER DETAIL

NO SCALE

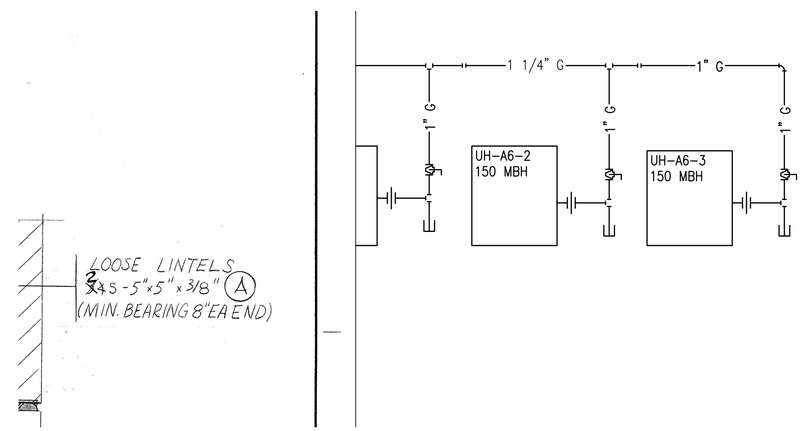

2 / M105 GAS PIPING RISER DIAGRAM

NO SCALE

NAVSTA DRAWING NO. 44535-412

NAVFAC

AMES & WHITAKER Architects

BID SET SUBMISSION

12/30/19

DES KWK | DRW GJG | CHK KWK

<<PM/DM>> RC

BRANCH MANAGER XX

CHIEF ENG/ARCH XXX

<<XXX>> XX

DEPARTMENT OF THE NAVY
NAVAL FACILITIES ENGINEERING COMMAND
NORTHEAST IPT
NAVAL FACILITIES ENGINEERING COMMAND – MID-ATLANTIC
NAVAL STATION – NORFOLK, VIRGINIA
NAVAL STATION NEWPORT NEWPORT, RI
DECENTRALIZE STEAM AT BOILER PLANT A6
A6 MECHANICAL PLAN

SCALE: AS NOTED

EPROJECT NO.: 1389839

CONSTR. CONTR. NO.

NAVFAC DRAWING NO. 12799476

SHEET 46 OF 65

M105

DRAWFORM REVISION: 10 MARCH 2009

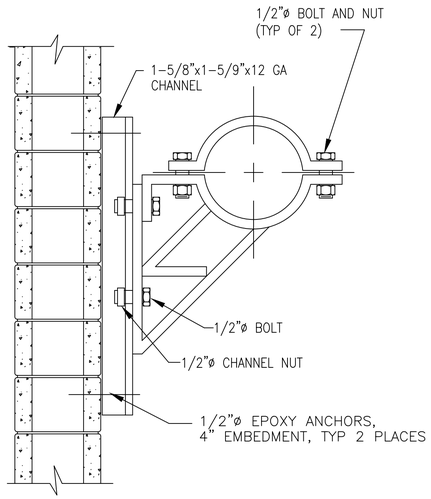

1 / M500 EXTERIOR GAS PIPE SUPPORT DETAIL

NO SCALE

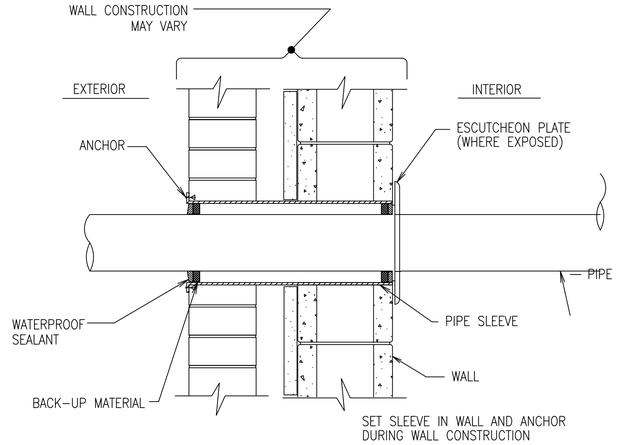

2 / M500 PIPE SLEEVE THRU EXTERIOR WALL DETAIL

NO SCALE

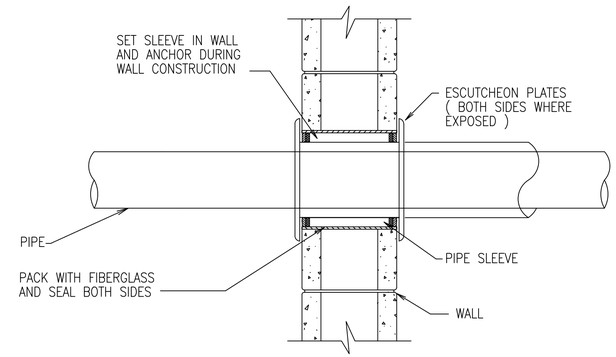

3 / M500 PIPE SLEEVE THRU INTERIOR WALL DETAIL

NO SCALE

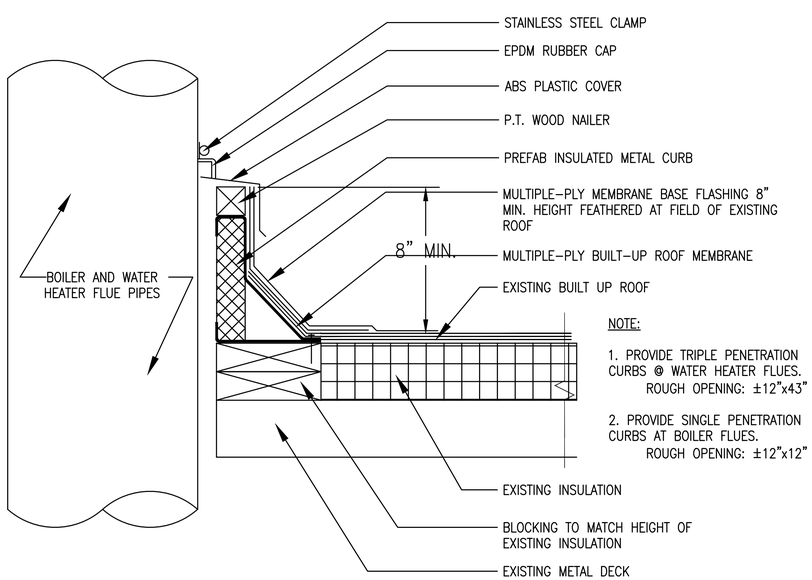

NOTE:

1. PROVIDE TRIPLE PENETRATION CURBS @ WATER HEATER FLUES.
   ROUGH OPENING: ±12"x43"

2. PROVIDE SINGLE PENETRATION CURBS AT BOILER FLUES.
   ROUGH OPENING: ±12"x12"

4 / M500 ROOF PENETRATION DETAIL

NO SCALE

SYM	DESCRIPTION	DATE	APPR

NAVFAC

AMES & WHITAKER Architects

BID SET SUBMISSION

12/30/19

DES KWK	DRW GJG	CHK KWK	
<<PM/DM>>	RC		
BRANCH MANAGER	XX		
CHIEF ENG/ARCH	XXX		
<<XXX>>	XX		

DEPARTMENT OF THE NAVY
NAVAL FACILITIES ENGINEERING COMMAND
NORTHEAST IPT

NAVAL FACILITIES ENGINEERING COMMAND – MID-ATLANTIC
NAVAL STATION – NORFOLK, VIRGINIA

NAVAL STATION NEWPORT
NEWPORT, RI

DECENTRALIZE STEAM AT BOILER PLANT A6

MECHANICAL DETAILS

SCALE: AS NOTED

EPROJECT NO.: 1389839

CONSTR. CONTR. NO.

NAVFAC DRAWING NO.
12799477

SHEET 47 OF 65

M500

NAVSTA DRAWING NO.
44536-412

DRAWFORM REVISION: 10 MARCH 2009

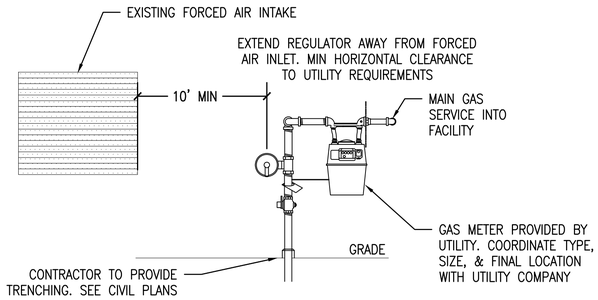

1 / M501 TYPICAL LPG GAS METER DETAIL

NO SCALE

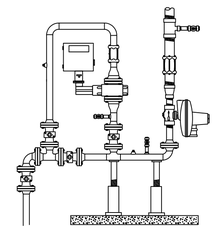

2 / M501 B23A ELEVATED PRESSURE GAS METER DETAIL

NO SCALE

SYM	DESCRIPTION	DATE	APPR

NAVFAC

AMES & WHITAKER Architects

BID SET SUBMISSION

12/30/19

DES	KWK	DRW	GJG	CHK	KWK

<<PM/DM>>	RC
BRANCH MANAGER	XX
CHIEF ENG/ARCH	XXX
<<XXX>>	XX

DEPARTMENT OF THE NAVY
NAVAL FACILITIES ENGINEERING COMMAND ~ MID-ATLANTIC
NORTHEAST IPT
NAVAL FACILITIES ENGINEERING COMMAND
NAVAL STATION ~ NORFOLK, VIRGINIA
NAVAL STATION NEWPORT
NEWPORT, RI

DECENTRALIZE STEAM AT BOILER PLANT A6

MECHANICAL DETAILS

SCALE: AS NOTED

EPROJECT NO.: 1389839

CONSTR. CONTR. NO.

NAVFAC DRAWING NO. 12799478

SHEET 48 OF 65

NAVSTA DRAWING NO. 44537-412

M501

DRAWFORM REVISION: 10 MARCH 2009

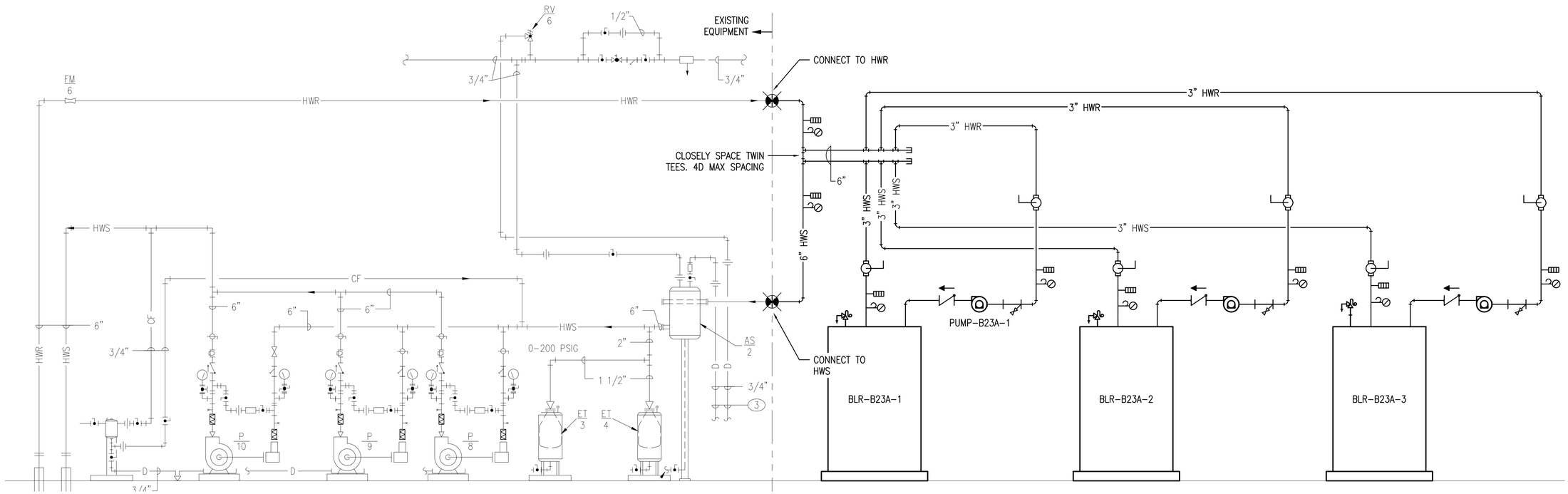

BUILDING 23A
SCHEMATIC FLOW DIAGRAM – HYDRONIC HEATING SYSTEM

1 / M600

NO SCALE

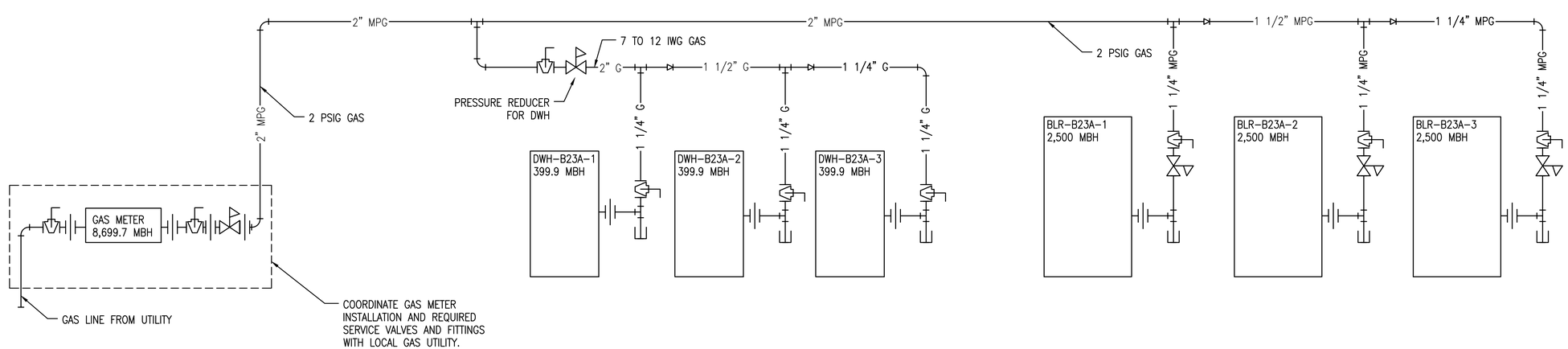

BUILDING 23A
GAS PIPING DIAGRAM

2 / M600

NO SCALE

NAVSTA DRAWING NO.
44538-412

APPR	DATE	DESCRIPTION	SYM

NAVFAC

AMES & WHITAKER Architects

BID SET SUBMISSION

12/30/19

DES KWK	DRW GJG	CHK KWK	
<<PM/DM>>	RC		
BRANCH MANAGER	XX		
CHIEF ENG/ARCH	XXX		
<<XXX>>	XX		

DEPARTMENT OF THE NAVY
NAVAL FACILITIES ENGINEERING COMMAND
NORTHEAST IPT

NAVAL FACILITIES ENGINEERING COMMAND – MID-ATLANTIC
NAVAL STATION – NORFOLK, VIRGINIA

NAVAL STATION NEWPORT
NEWPORT, RI

DECENTRALIZE STEAM AT BOILER PLANT A6

MECHANICAL PIPING DIAGRAMS

SCALE: AS NOTED

EPROJECT NO.: 1389839

CONSTR. CONTR. NO.

NAVFAC DRAWING NO.
12799479

SHEET 49 OF 65

M600

DRAWFORM REVISION: 10 MARCH 2009

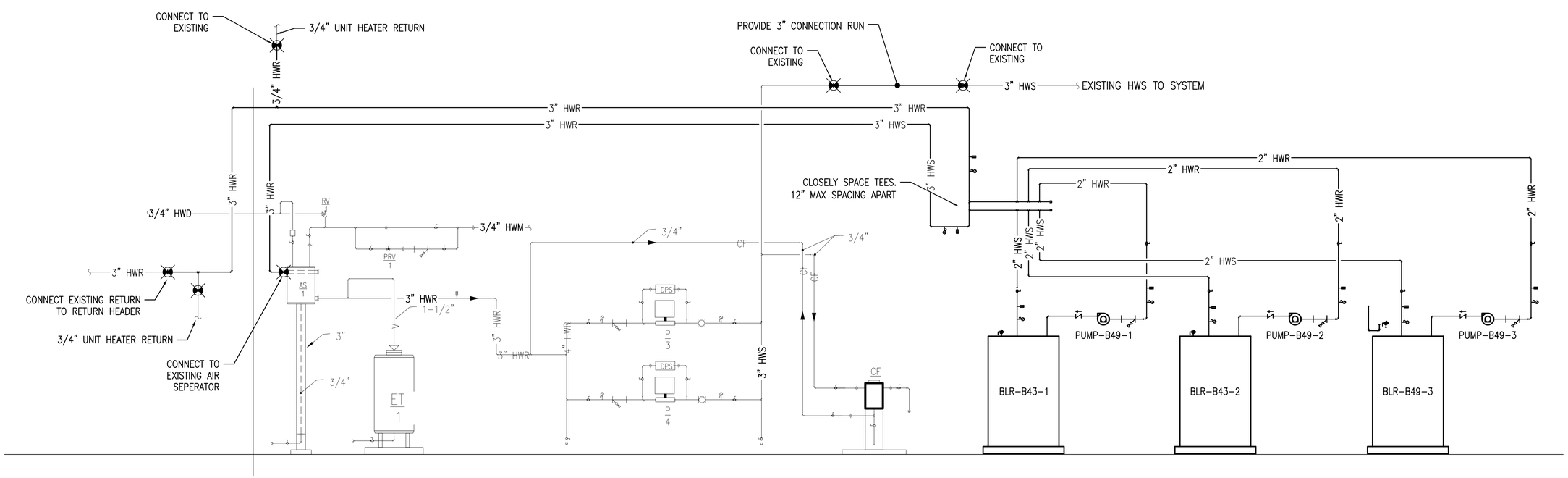

1 M601 B43 HW SYSTEM PIPING DIAGRAM

NO SCALE

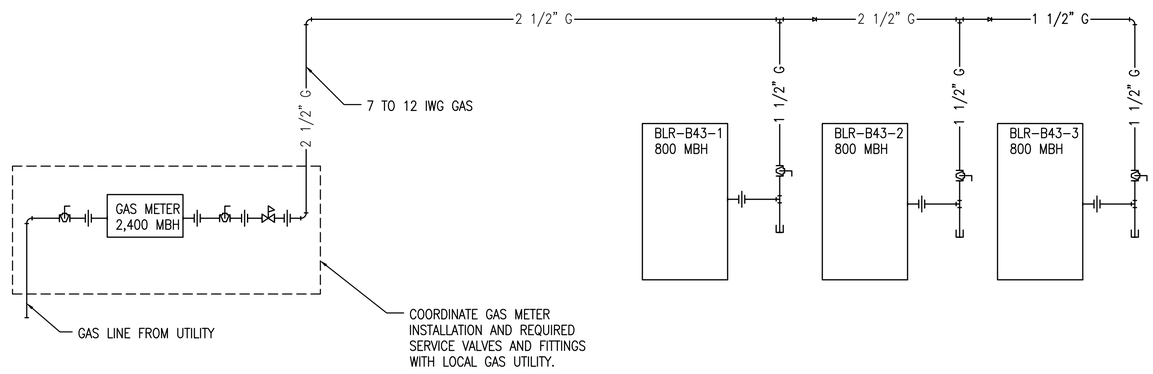

2 M601 B43 GAS PIPING DIAGRAM

NO SCALE

SYM	DESCRIPTION	DATE	APPR

NAVFAC

SEAL

AMES & WHITAKER Architects

A/E INFO

APPROVED

FOR COMMANDER NAVFAC

ACTIVITY

BID SET SUBMISSION

SATISFACTORY TO DATE 12/30/19

DES KWK DRW GJG CHK KWK

<<PM/DM>> RC

BRANCH MANAGER XX

CHIEF ENG/ARCH XXX

<<XXX>> XX

DEPARTMENT OF THE NAVY
NAVAL FACILITIES ENGINEERING COMMAND
NORTHEAST IPT

NAVAL FACILITIES ENGINEERING COMMAND – MID-ATLANTIC
NAVAL STATION – NORFOLK, VIRGINIA

NAVAL STATION NEWPORT
NEWPORT, RI

DECENTRALIZE STEAM AT BOILER PLANT A6

MECHANICAL PIPING DIAGRAMS

SCALE: AS NOTED

EPROJECT NO.: 1389839

CONSTR. CONTR. NO.

NAVFAC DRAWING NO. 12799480

SHEET 50 OF 65

NAVSTA DRAWING NO. 44539-412

M601

DRAWFORM REVISION: 10 MARCH 2009

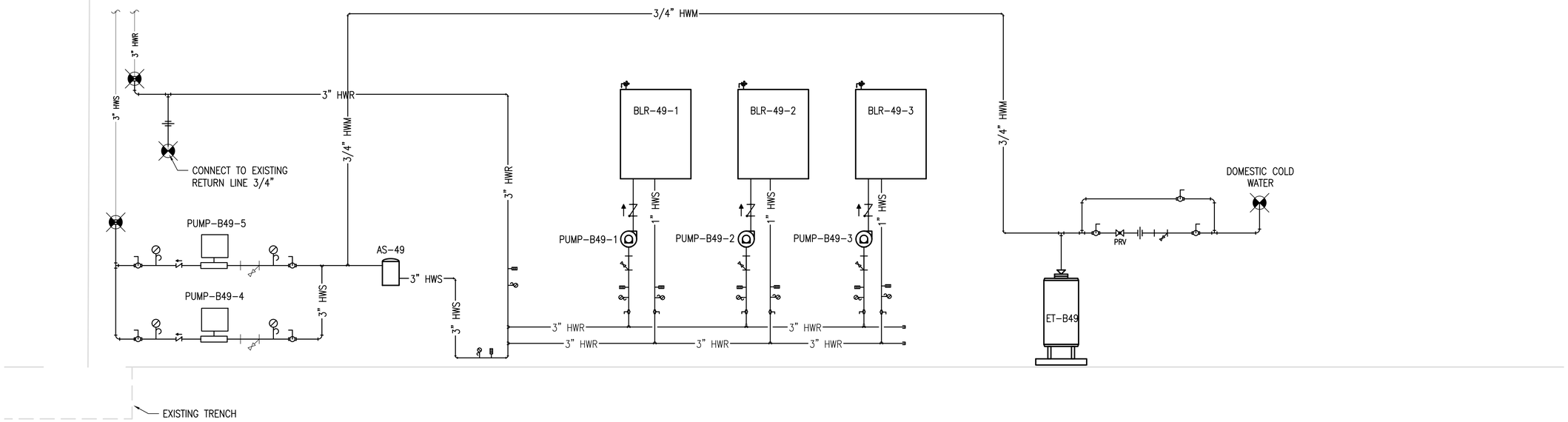

1 / M602 B49 HOT WATER PIPING DIAGRAM

NO SCALE

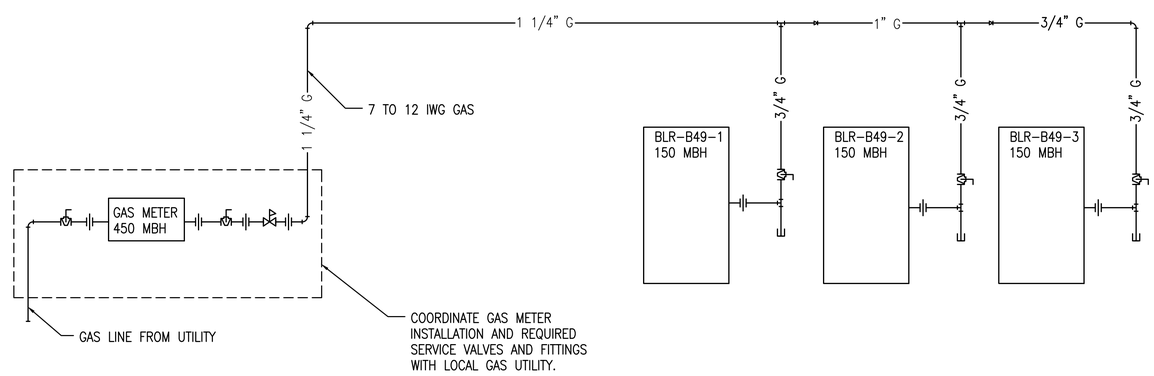

2 / M602 B49 GAS PIPING DIAGRAM

NO SCALE

SYM	DESCRIPTION	DATE	APPR

NAVFAC

SEAL

AMES & WHITAKER Architects

A/E INFO

APPROVED

FOR COMMANDER NAVFAC

ACTIVITY

BID SET SUBMISSION

SATISFACTORY TO DATE 12/30/19

DES KWK | DRW GJG | CHK KWK

<<PM/DM>> RC

BRANCH MANAGER XX

CHIEF ENG/ARCH XXX

<<XXX>> XX

DEPARTMENT OF THE NAVY
NAVAL FACILITIES ENGINEERING COMMAND
NORTHEAST IPT

NAVAL FACILITIES ENGINEERING COMMAND – MID-ATLANTIC
NAVAL STATION – NORFOLK, VIRGINIA

NAVAL STATION NEWPORT
NEWPORT, RI

DECENTRALIZE STEAM AT BOILER PLANT A6

MECHANICAL PIPING DIAGRAMS

SCALE: AS NOTED

EPROJECT NO.: 1389839

CONSTR. CONTR. NO.

NAVFAC DRAWING NO.
12799481

SHEET 51 OF 65

NAVSTA DRAWING NO.
44540-412

M602

DRAWFORM REVISION: 10 MARCH 2009

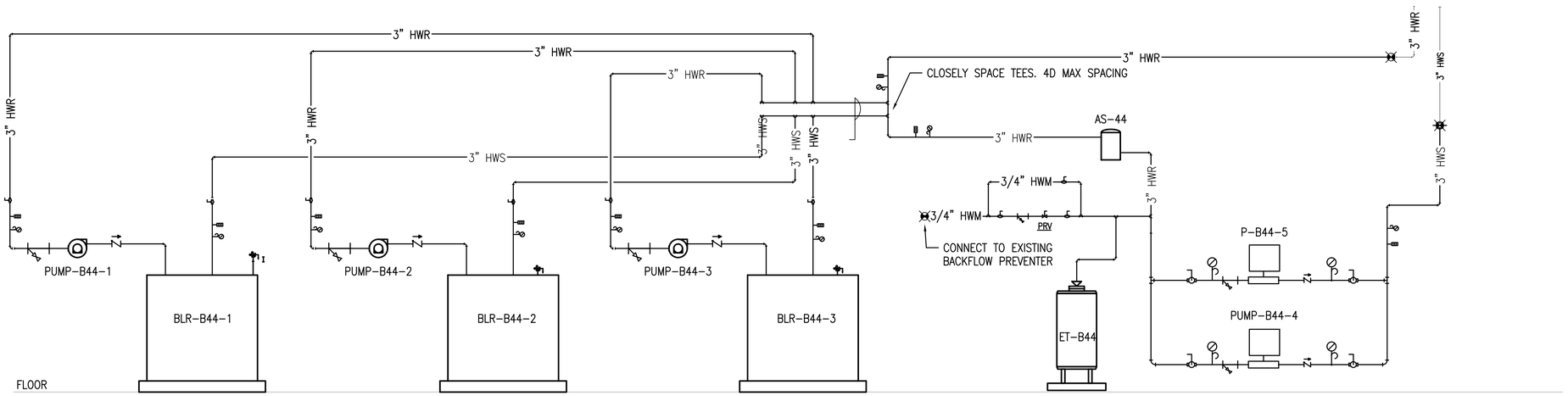

1 / M603 B44 HW PIPING RISER

NO SCALE

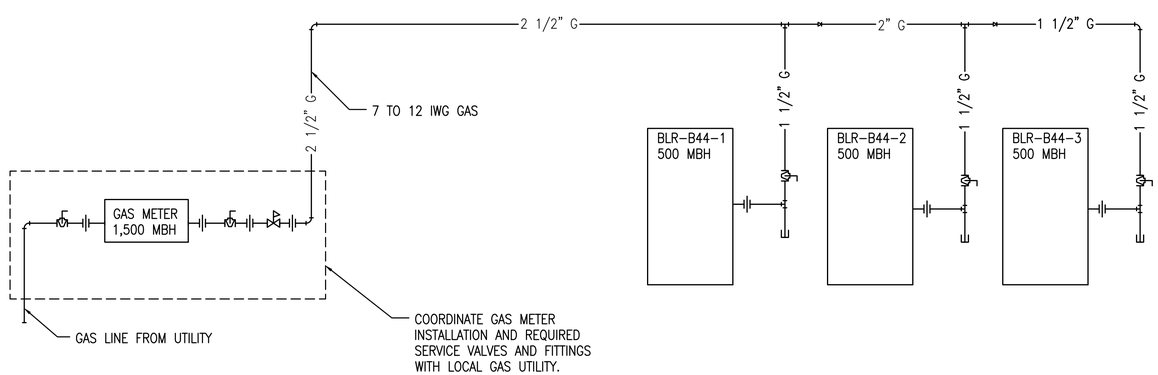

2 / M603 B44 GAS PIPING DIAGRAM

NO SCALE

SYM	DESCRIPTION	DATE	APPR

NAVFAC

AMES & WHITAKER Architects

BID SET SUBMISSION

12/30/19

DES KWK	DRW GJG	CHK KWK
<<PM/DM>>	RC	
BRANCH MANAGER	XX	
CHIEF ENG/ARCH	XXX	
<<XXX>>	XX	

DEPARTMENT OF THE NAVY
NAVAL FACILITIES ENGINEERING COMMAND
NORTHEAST IPT
NAVAL FACILITIES ENGINEERING COMMAND ~ MID-ATLANTIC
NAVAL STATION – NORFOLK, VIRGINIA
NAVAL STATION NEWPORT
NEWPORT, RI

DECENTRALIZE STEAM AT BOILER PLANT A6

MECHANICAL CONTROL DIAGRAMS

SCALE: AS NOTED
EPROJECT NO.: 1389839
CONSTR. CONTR. NO.
NAVFAC DRAWING NO. 12799482
SHEET 52 OF 65

NAVSTA DRAWING NO. 44541-412

M603

DRAWFORM REVISION: 10 MARCH 2009

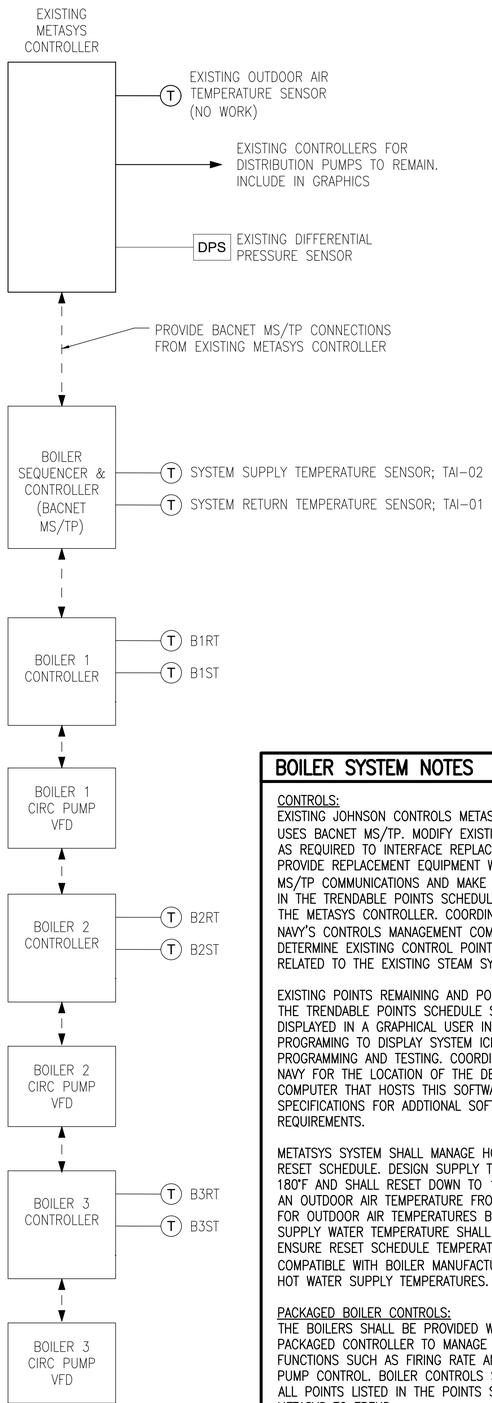

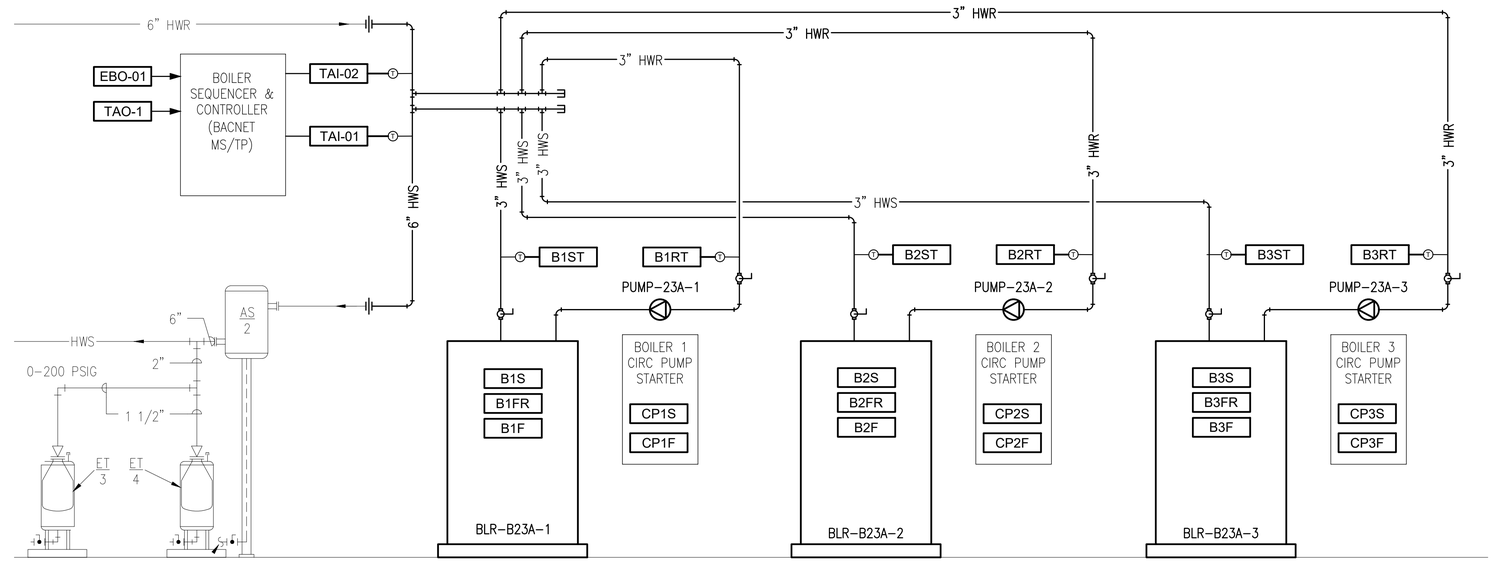

1 M604 B23A HOT WATER CONTROL DIAGRAM

NO SCALE

BOILER SYSTEM NOTES

CONTROLS:
EXISTING JOHNSON CONTROLS METASYS CONTROLLER USES BACNET MS/TP. MODIFY EXISTING CONTOLLERS AS REQUIRED TO INTERFACE REPLACEMENT EQUIPMENT. PROVIDE REPLACEMENT EQUIPMENT WITH BACNET MS/TP COMMUNICATIONS AND MAKE FINDPOINTS LISTED IN THE TRENDABLE POINTS SCHEDULE AVAILABLE TO THE METASYS CONTROLLER. COORDINATE WITH THE NAVY'S CONTROLS MANAGEMENT COMPANY TO DETERMINE EXISTING CONTROL POINTS AND SCHEMES RELATED TO THE EXISTING STEAM SYSTEM.

EXISTING POINTS REMAINING AND POINTS LISTED IN THE TRENDABLE POINTS SCHEDULE SHALL BE DISPLAYED IN A GRAPHICAL USER INTERFACE. PROVIDE PROGRAMING TO DISPLAY SYSTEM ICLUDING ALL PROGRAMMING AND TESTING. COORDINATE WITH THE NAVY FOR THE LOCATION OF THE DESIGNATE COMPUTER THAT HOSTS THIS SOFTWARE. SEE SPECIFICATIONS FOR ADDTIONAL SOFTWARE REQUIREMENTS.

METATSYS SYSTEM SHALL MANAGE HOT WATER SUPPLY RESET SCHEDULE. DESIGN SUPPLY TEMPERATURE IS 180°F AND SHALL RESET DOWN TO 130°F BASED ON AN OUTDOOR AIR TEMPERATURE FROM 30F TO 65F. FOR OUTDOOR AIR TEMPERATURES BELOW 30°F THE SUPPLY WATER TEMPERATURE SHALL BE 180°F. ENSURE RESET SCHEDULE TEMPERATURES ARE COMPATIBLE WITH BOILER MANUFACTURER'S MINIMUM HOT WATER SUPPLY TEMPERATURES.

PACKAGED BOILER CONTROLS:
THE BOILERS SHALL BE PROVIDED WITH A FACTORY PACKAGED CONTROLLER TO MANAGE ALL INTERNAL FUNCTIONS SUCH AS FIRING RATE AND CIRCULATOR PUMP CONTROL. BOILER CONTROLS SHALL PROVIDE ALL POINTS LISTED IN THE POINTS SCHEDULE FOR THE METASYS TO TREND.

PROVIDE BOILERS WITH BACNET COMMUNICATION CARDS. ENSURE THE (3) BOILERS ARE LEAD–LAG SEQUENCED AND COORDINATE THEIR MODULATION RATES TO PROVIDE MAXIMUM EFFICIENCY. USE A FACTORY SUPPLIED BOILER SEQUENCER OR BOILER CONTROLLER IF REQUIRED TO ACHIEVE THIS.

SEQUENCE OF OPPS:
ON A CALL FOR HEAT THE METASYS CONTROLLER SHALL:

1. ISSUE A START COMMAND TO THE HOT WATER PUMPS.
   EXISTING PUMP CONTROL:
   A. THE METASYS SHALL SELECT A LEAD PUMP AND START IT. THE VARIABLE SPEED CONTROLLER SHALL BRING THE PUMP UP TO 50%.
   B. UPON PROVEN FLOW BY THE DIFFERENTIAL PRESSURE SWITCH THE CONTROLLER SHALL RAMP THE VARIABLE DRIVE SPEED UNTIL THE PRESSURE SETPOINT IS REACHED.
   C. IF THE SYSTEM DIFFERENTIAL PRESSURE FALLS BELOW THE SETPOINT FOR A PERIOD OF FIVE MINUTES, THE CONTROLER SHALL THEN UNLOAD THE LEAD PUMP VFD TO 50%. THE LAG PUMP SHALL SHALL START TO 50%. ONCE BOTH PUMPS ARE AT 50%, THE CONTROLLER SHALL MODULATE BOTH DRIVES TO MAINTAIN THE DESIRED DIFFERENTIAL PRESSURE.
   D. WHEN THE SYSTEM DIFFERENTIAL PRESSURE RISES ABOVE THE SEPOINT, THE REVERSE OF THIS ACTION SHALL OCCUR.
   E. THE LEAD\LAG\FOLLOW SELECTION IS DECIDED BASED ON NUMBER OF STARTS AND TOTAL RUN TIMES. THE PUMP WITH THE LEAST NUMBER OF STARTS SHALL ALWAYS BE STARTED FIRST, WHILE THE PUMP WITH THE GREATEST RUN TIME SHALL ALWAYS BE STOPPED FIRST.
   F. PROVIDE A HOT WATER SUPPLY SETPOINT TEMPERATURE TO THE BOILER CONTROLLER THROUGH THE EXISTING RESET SCHEDULE AND OUTDOOR AIR TEMPERATURE SENSOR.
2. ONCE FLOW IS PROVEN BY THE DIFFERENTIAL PRESSURE SWITCHES, THE DDC SHALL ISSUE A CALL FOR HEAT TO THE BOILER SEQUENCER & CONTROLLER.

ON A CALL FOR HEAT FROM THE METASYS THE BOILER SEQUENCER & CONTROLLER SHALL:

1. ENGAGE EACH BOILER AS REQUIRED TO MAINTAIN SYSTEM HOT WATER SUPPLY TEMPERATURE. BOILERS ENGAGEMENT AND MODULATION SHALL BE COORDINATEED TO PROVIDE MAXIMUM EFFICIENCY.
2. WHEN A BOILER IS ENGAGED, THAT BOILER'S CIRC PUMP SHALL START. THE CIRC PUMP SHAL STOP WHEN IT'S BOILER IS DIS–ENGAGED.

ON A CIRC PUMP FAILURE, THE RELATED BOILER SHALL SHUTDOWN. THE FAULT CODE SHALL BE REPORTED TO THE METASYS AND DISPLAYED IN THE GRAPHICS.

ON A BOILER FAILURE, THE RELATED CIRCULATOR PUMP SHALL SHUTDOWN. THE FAULT CODE SHALL BE REPORTED TO THE METASYS AND DISPLAYED IN THE GRAPHICS.

TRENDABLE POINTS SCHEDULE

POINT	DESCRIPTION	WORK ITEM	TYPE	ALARM CONDITION
EBO-01	CALL FOR HEAT	PROVIDE A BOILER ENABLE SIGNAL THROUGH GATEWAY TO BOILERS	ON / OFF	NONE
TAO-1	SYSTEM SUPPLY SETPOINT TEMP	PROVIDE A REMOTE SETPOINT TEMPERATURE SIGNAL THROUGH GATEWAY TO BOILERS	TEMPERATURE	NONE
TAI-01	SYSTEM RETURN TEMP	PROVIDE FIELD SENSOR, AND MAKE AVAILABLE TO METASYS THROUGH GATEWAY	TEMPERATURE	LOW / HIGH
TAI-02	SYSTEM SUPPLY TEMP	PROVIDE FIELD SENSOR, AND MAKE AVAILABLE TO METASYS THROUGH GATEWAY	TEMPERATURE	LOW / HIGH
CP1S	CIRC PUMP 1 STATUS	PROVIDE VFD WITH BACNET	ON / OFF	NONE
CP2S	CIRC PUMP 2 STATUS	PROVIDE VFD WITH BACNET	ON / OFF	NONE
CP3S	CIRC PUMP 3 STATUS	PROVIDE VFD WITH BACNET	ON / OFF	NONE
CP1F	CIRC PUMP 1 FAULT	PROVIDE VFD WITH BACNET	FAULT DESCRIPTION	FAULT PRESENT
CP2F	CIRC PUMP 2 FAULT	PROVIDE VFD WITH BACNET	FAULT DESCRIPTION	FAULT PRESENT
CP3F	CIRC PUMP 3 FAULT	PROVIDE VFD WITH BACNET	FAULT DESCRIPTION	FAULT PRESENT
B1S	BOILER 1 STATUS	PROVIDE BOILER CONTORLS WITH BACNET	ON / OFF / STBY	NONE
B2S	BOILER 2 STATUS	PROVIDE BOILER CONTORLS WITH BACNET	ON / OFF / STBY	NONE
B3S	BOILER 3 STATUS	PROVIDE BOILER CONTORLS WITH BACNET	ON / OFF / STBY	NONE
B1F	BOILER 1 FAULT	PROVIDE BOILER CONTORLS WITH BACNET	FAULT DESCRIPTION	FAULT PRESENT
B2F	BOILER 2 FAULT	PROVIDE BOILER CONTORLS WITH BACNET	FAULT DESCRIPTION	FAULT PRESENT
B3F	BOILER 3 FAULT	PROVIDE BOILER CONTORLS WITH BACNET	FAULT DESCRIPTION	FAULT PRESENT
B1R	BOILER 1 FIRING RATE	PROVIDE BOILER CONTORLS WITH BACNET	[%]	NONE
B2R	BOILER 2 FIRING RATE	PROVIDE BOILER CONTORLS WITH BACNET	[%]	NONE
B3R	BOILER 3 FIRING RATE	PROVIDE BOILER CONTORLS WITH BACNET	[%]	NONE
B1ST	BOILER 1 SUPPLY TEMP	PROVIDE BOILER CONTORLS WITH BACNET	TEMPERATURE	LOW / HIGH
B2ST	BOILER 2 SUPPLY TEMP	PROVIDE BOILER CONTORLS WITH BACNET	TEMPERATURE	LOW / HIGH
B3ST	BOILER 3 SUPPLY TEMP	PROVIDE BOILER CONTORLS WITH BACNET	TEMPERATURE	LOW / HIGH
B1RT	BOILER 1 RETURN TEMP	PROVIDE BOILER CONTORLS WITH BACNET	TEMPERATURE	LOW / HIGH
B2RT	BOILER 2 RETURN TEMP	PROVIDE BOILER CONTORLS WITH BACNET	TEMPERATURE	LOW / HIGH
B3RT	BOILER 3 RETURN TEMP	PROVIDE BOILER CONTORLS WITH BACNET	TEMPERATURE	LOW / HIGH
DP1	DISTRIBUTION PUMP 1 STATUS	UTILIZE EXISTING CONTROLS; DISPLAY GRAPHICALLY	ON / OFF	NONE
DP2	DISTRIBUTION PUMP 2 STATUS	UTILIZE EXISTING CONTROLS; DISPLAY GRAPHICALLY	ON / OFF	NONE
DP3	DISTRIBUTION PUMP 3 STATUS	UTILIZE EXISTING CONTROLS; DISPLAY GRAPHICALLY	ON / OFF	NONE
DP1	DISTRIBUTION PUMP 1 SPEED	UTILIZE EXISTING CONTROLS; DISPLAY GRAPHICALLY	[%]	NONE
DP2	DISTRIBUTION PUMP 2 SPEED	UTILIZE EXISTING CONTROLS; DISPLAY GRAPHICALLY	[%]	NONE
DP3	DISTRIBUTION PUMP 3 SPEED	UTILIZE EXISTING CONTROLS; DISPLAY GRAPHICALLY	[%]	NONE
DPDP	DIFFERENTIAL PRESURE SENSOR	UTILIZE EXISTING CONTROLS; DISPLAY GRAPHICALLY	PRESSURE	LOW / HIGH

NOTES:
FOR ALARM STATUS COLUMN, PROGRAM THE CONTROLLER TO DISPLAY AN ALARM IN THE GRAPHICAL SYSTEM WHEN ALARM CONDITION IS OCCURS

NAVSTA DRAWING NO. 44542–412

APPR | DATE | DESCRIPTION | SYM

NAVFAC

AMES & WHITAKER Architects

BID SET SUBMISSION

12/30/19

DES KWK | DRW GJG | CHK KWK

<<PM/ENG>> RC

BRANCH MANAGER XX

CHIEF ENG/ARCH XXX

<<XXX>> XX

DEPARTMENT OF THE NAVY
NAVAL FACILITIES ENGINEERING COMMAND
NORTHEAST IPT

NAVAL FACILITIES ENGINEERING COMMAND ~ MID-ATLANTIC
NAVAL STATION – NORFOLK, VIRGINIA

NAVAL STATION NEWPORT
NEWPORT, RI

DECENTRALIZE STEAM AT BOILER PLANT A6

MECHANICAL CONTROL DIAGRAMS

SCALE: AS NOTED

EPROJECT NO.: 1389839

CONSTR. CONTR. NO.

NAVFAC DRAWING NO. 12799483

SHEET 53 OF 65

M604

DRAWFORM REVISION: 10 MARCH 2009

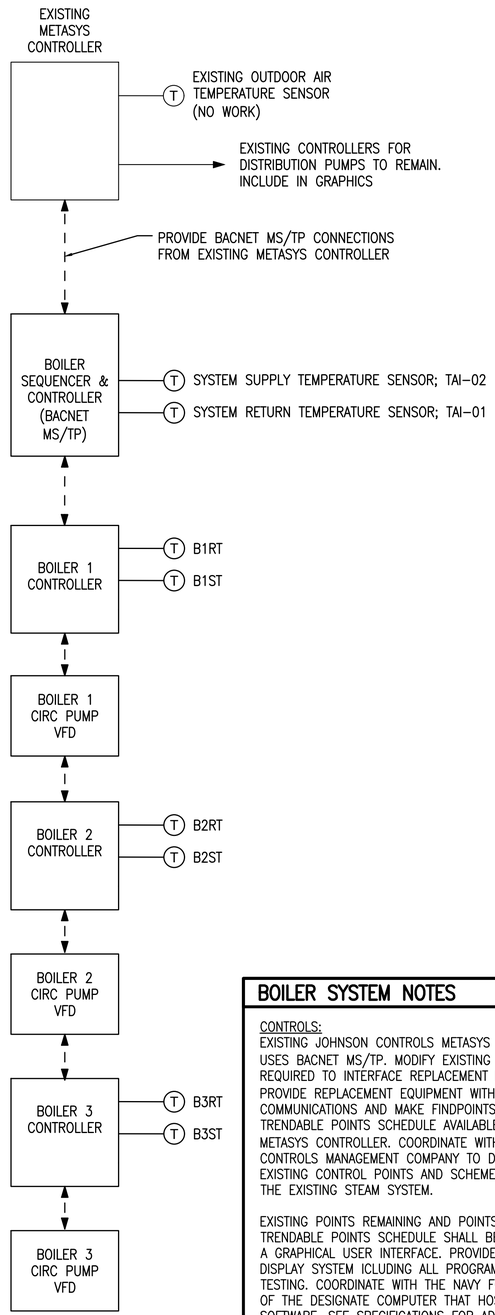

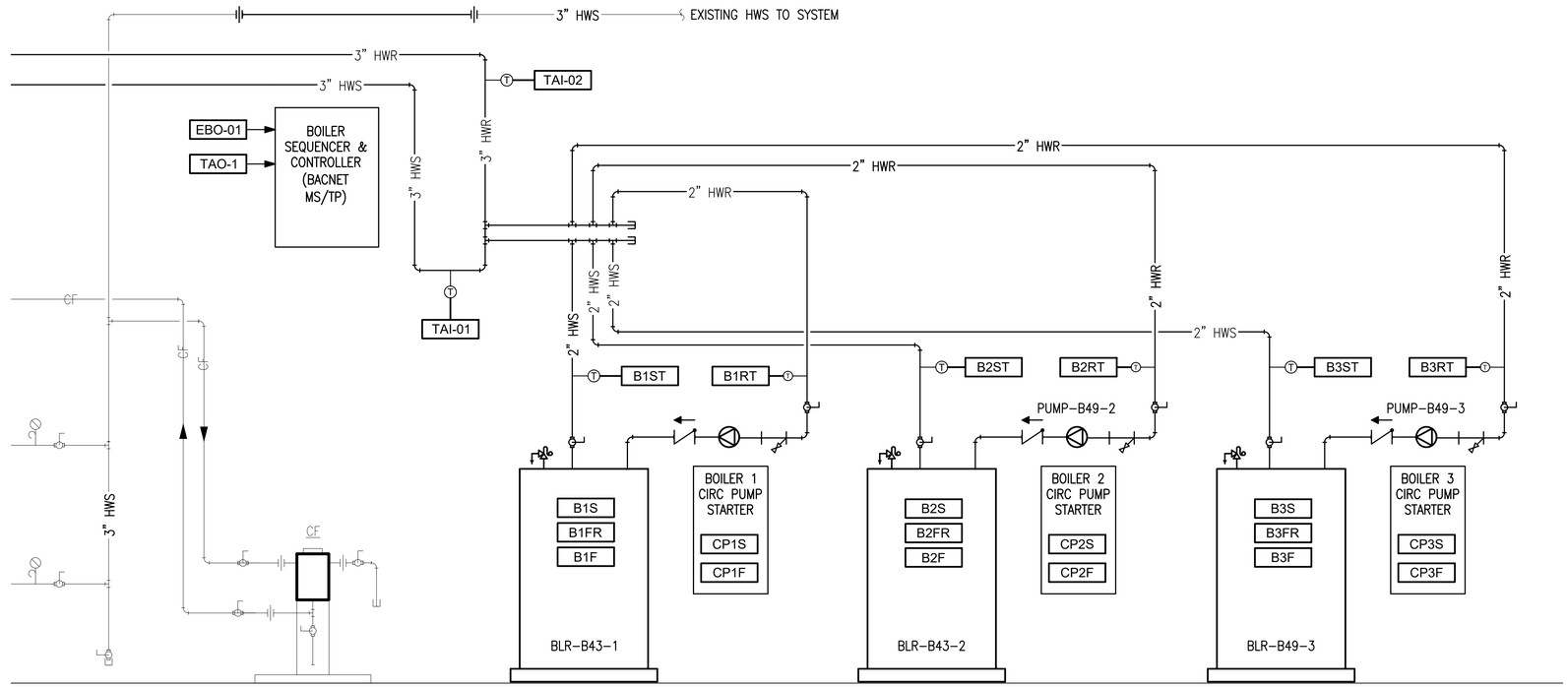

1 M605 B43 HOT WATER CONTROL DIAGRAM

NO SCALE

BOILER SYSTEM NOTES

CONTROLS:
EXISTING JOHNSON CONTROLS METASYS CONTROLLER USES BACNET MS/TP. MODIFY EXISTING CONTOLLERS AS REQUIRED TO INTERFACE REPLACEMENT EQUIPMENT. PROVIDE REPLACEMENT EQUIPMENT WITH BACNET MS/TP COMMUNICATIONS AND MAKE FINDPOINTS LISTED IN THE TRENDABLE POINTS SCHEDULE AVAILABLE TO THE METASYS CONTROLLER. COORDINATE WITH THE NAVY'S CONTROLS MANAGEMENT COMPANY TO DETERMINE EXISTING CONTROL POINTS AND SCHEMES RELATED TO THE EXISTING STEAM SYSTEM.

EXISTING POINTS REMAINING AND POINTS LISTED IN THE TRENDABLE POINTS SCHEDULE SHALL BE DISPLAYED IN A GRAPHICAL USER INTERFACE. PROVIDE PROGRAMING TO DISPLAY SYSTEM ICLUDING ALL PROGRAMMING AND TESTING. COORDINATE WITH THE NAVY FOR THE LOCATION OF THE DESIGNATE COMPUTER THAT HOSTS THIS SOFTWARE. SEE SPECIFICATIONS FOR ADDTIONAL SOFTWARE REQUIREMENTS.

METATSYS SYSTEM SHALL MANAGE HOT WATER SUPPLY RESET SCHEDULE. DESIGN SUPPLY TEMPERATURE IS 180°F AND SHALL RESET DOWN TO 130°F BASED ON AN OUTDOOR AIR TEMPERATURE FROM 30F TO 65F. FOR OUTDOOR AIR TEMPERATURES BELOW 30°F THE SUPPLY WATER TEMPERATURE SHALL BE 180°F. ENSURE RESET SCHEDULE TEMPERATURES ARE COMPATIBLE WITH BOILER MANUFACTURER'S MINIMUM HOT WATER SUPPLY TEMPERATURES.

PACKAGED BOILER CONTROLS:
THE BOILERS SHALL BE PROVIDED WITH A FACTORY PACKAGED CONTROLLER TO MANAGE ALL INTERNAL FUNCTIONS SUCH AS FIRING RATE AND CIRCULATOR PUMP CONTROL. BOILER CONTROLS SHALL PROVIDE ALL POINTS LISTED IN THE POINTS SCHEDULE FOR THE METASYS TO TREND.

PROVIDE BOILERS WITH BACNET COMMUNICATION CARDS. ENSURE THE (3) BOILERS ARE LEAD-LAG SEQUENCED AND COORDINATE THEIR MODULATION RATES TO PROVIDE MAXIMUM EFFICIENCY. USE A FACTORY SUPPLIED BOILER SEQUENCER OR BOILER CONTROLLER IF REQUIRED TO ACHIEVE THIS.

SEQUENCE OF OPPS:
ON A CALL FOR HEAT THE METASYS CONTROLLER SHALL:

1. START THE DISTRIBUTION PUMPS
   EXISTING PUMP SEQUENCE:
   START LEAD PUMP. EXISTNIG PUMPS ARE SIZED FOR 100% LOAD. LEAD PUMP IS SELECTED BASED ON DDC TIME SCHEDULE. THE PUMP WITH THE LEAST RUN TIME SHALL BE SELECTED AS LEAD.
2. WHEN FLOW IS ESTABLIESHED, ISSUE A CALL FOR HEAT TO THE BOILER SEQUENCER & CONTROLLER.
   EXISTING: FLOW IS PROVEN ON CURRENT DRAW FROM PUMPS. WHEN PUMP DRAWS MORE THAN 2.5AMPS, FLOW IS PROVEN.

ON A CALL FOR HEAT THE BOILER SEQUENCER & CONTROLLER SHALL:

1. ENGAGE EACH BOILER AS REQUIRED TO MAINTAIN SYSTEM HOT WATER SUPPLY TEMPERATURE. BOILERS ENGAGEMENT AND MODULATION SHALL BE COORDINATEED TO PROVIDE MAXIMUM EFFICIENCY.
2. WHEN A BOILER IS ENGAGED, THAT BOILER'S CIRC PUMP SHALL START. THE CIRC PUMP SHAL STOP WHEN THE BOILER IS DIS-ENGAGED.
3. A HOT WATER SUPPLY SETPOINT TEMPERATURE SHAL BE SUPPLIED TO THE BOILER CONTROLLER. THIS TEMPERATURE SHALL BE ACCORDING THE EXISTING RESET SCHEDULE WITHIN THE METASYS.

ON A CIRC PUMP FAILURE, THE RELATED BOILER SHALL SHUTDOWN. THE FAULT CODE SHALL BE REPORTED TO THE METASYS AND DISPLAYED IN THE GRAPHICS.

ON A BOILER FAILURE, THE RELATED CIRCULATOR PUMP SHALL SHUTDOWN. THE FAULT CODE SHALL BE REPORTED TO THE METASYS AND DISPLAYED IN THE GRAPHICS.

TRENDABLE POINTS SCHEDULE

POINT	DESCRIPTION	WORK ITEM	TYPE	ALARM CONDITION
EBO-01	CALL FOR HEAT	PROVIDE A BOILER ENABLE SIGNAL THROUGH GATEWAY TO BOILERS	ON / OFF	NONE
TAO-1	SYSTEM SUPPLY SETPOINT TEMP	PROVIDE A REMOTE SETPOINT TEMPERATURE SIGNAL THROUGH GATEWAY TO BOILERS	TEMPERATURE	NONE
TAI-01	SYSTEM RETURN TEMP	PROVIDE FIELD SENSOR, AND MAKE AVAILABLE TO METASYS THROUGH GATEWAY	TEMPERATURE	LOW / HIGH
TAI-02	SYSTEM SUPPLY TEMP	PROVIDE FIELD SENSOR, AND MAKE AVAILABLE TO METASYS THROUGH GATEWAY	TEMPERATURE	LOW / HIGH
CP1S	CIRC PUMP 1 STATUS	PROVIDE STARTER WITH BACNET	ON / OFF	NONE
CP2S	CIRC PUMP 2 STATUS	PROVIDE STARTER WITH BACNET	ON / OFF	NONE
CP3S	CIRC PUMP 3 STATUS	PROVIDE STARTER WITH BACNET	ON / OFF	NONE
CP1F	CIRC PUMP 1 FAULT	PROVIDE STARTER WITH BACNET	FAULT DESCRIPTION	FAULT PRESENT
CP2F	CIRC PUMP 2 FAULT	PROVIDE STARTER WITH BACNET	FAULT DESCRIPTION	FAULT PRESENT
CP3F	CIRC PUMP 3 FAULT	PROVIDE STARTER WITH BACNET	FAULT DESCRIPTION	FAULT PRESENT
B1S	BOILER 1 STATUS	PROVIDE BOILER CONTORLS WITH BACNET	ON / OFF / STBY	NONE
B2S	BOILER 2 STATUS	PROVIDE BOILER CONTORLS WITH BACNET	ON / OFF / STBY	NONE
B3S	BOILER 3 STATUS	PROVIDE BOILER CONTORLS WITH BACNET	ON / OFF / STBY	NONE
B1F	BOILER 1 FAULT	PROVIDE BOILER CONTORLS WITH BACNET	FAULT DESCRIPTION	FAULT PRESENT
B2F	BOILER 2 FAULT	PROVIDE BOILER CONTORLS WITH BACNET	FAULT DESCRIPTION	FAULT PRESENT
B3F	BOILER 3 FAULT	PROVIDE BOILER CONTORLS WITH BACNET	FAULT DESCRIPTION	FAULT PRESENT
B1R	BOILER 1 FIRING RATE	PROVIDE BOILER CONTORLS WITH BACNET	[%]	NONE
B2R	BOILER 2 FIRING RATE	PROVIDE BOILER CONTORLS WITH BACNET	[%]	NONE
B3R	BOILER 3 FIRING RATE	PROVIDE BOILER CONTORLS WITH BACNET	[%]	NONE
B1ST	BOILER 1 SUPPLY TEMP	PROVIDE BOILER CONTORLS WITH BACNET	TEMPERATURE	LOW / HIGH
B2ST	BOILER 2 SUPPLY TEMP	PROVIDE BOILER CONTORLS WITH BACNET	TEMPERATURE	LOW / HIGH
B3ST	BOILER 3 SUPPLY TEMP	PROVIDE BOILER CONTORLS WITH BACNET	TEMPERATURE	LOW / HIGH
B1RT	BOILER 1 RETURN TEMP	PROVIDE BOILER CONTORLS WITH BACNET	TEMPERATURE	LOW / HIGH
B2RT	BOILER 2 RETURN TEMP	PROVIDE BOILER CONTORLS WITH BACNET	TEMPERATURE	LOW / HIGH
B3RT	BOILER 3 RETURN TEMP	PROVIDE BOILER CONTORLS WITH BACNET	TEMPERATURE	LOW / HIGH
DP1S	DISTRIBUTION PUMP 1 STATUS	UTILIZE EXISTING CONTROLS; DISPLAY GRAPHICALLY	ON / OFF	NONE
DP2S	DISTRIBUTION PUMP 2 STATUS	UTILIZE EXISTING CONTROLS; DISPLAY GRAPHICALLY	ON / OFF	NONE

NOTES:
FOR ALARM STATUS COLUMN, PROGRAM THE CONTROLLER TO DISPLAY AN ALARM IN THE GRAPHICAL SYSTEM WHEN ALARM CONDITION IS OCCURS

NAVSTA DRAWING NO. 44543-412

SYM	DESCRIPTION	DATE	APPR

NAVFAC

AMES & WHITAKER Architects

BID SET SUBMISSION

12/30/19

DES KWK | DRW GJG | CHK KWK

<<PM/DM>> RC

BRANCH MANAGER XX

CHIEF ENG/ARCH XXX

<<XX>> XX

DEPARTMENT OF THE NAVY
NAVAL FACILITIES ENGINEERING COMMAND
NORTHEAST IPT
NAVAL FACILITIES ENGINEERING COMMAND ~ MID-ATLANTIC
NAVAL STATION NEWPORT
NAVAL STATION – NORFOLK, VIRGINIA
NEWPORT, RI

DECENTRALIZE STEAM AT BOILER PLANT A6

MECHANICAL CONTROL DIAGRAMS

SCALE: AS NOTED

EPROJECT NO.: 1389839

CONSTR. CONTR. NO.

NAVFAC DRAWING NO. 12799484

SHEET 54 OF 65

M605

DRAWFORM REVISION: 10 MARCH 2009

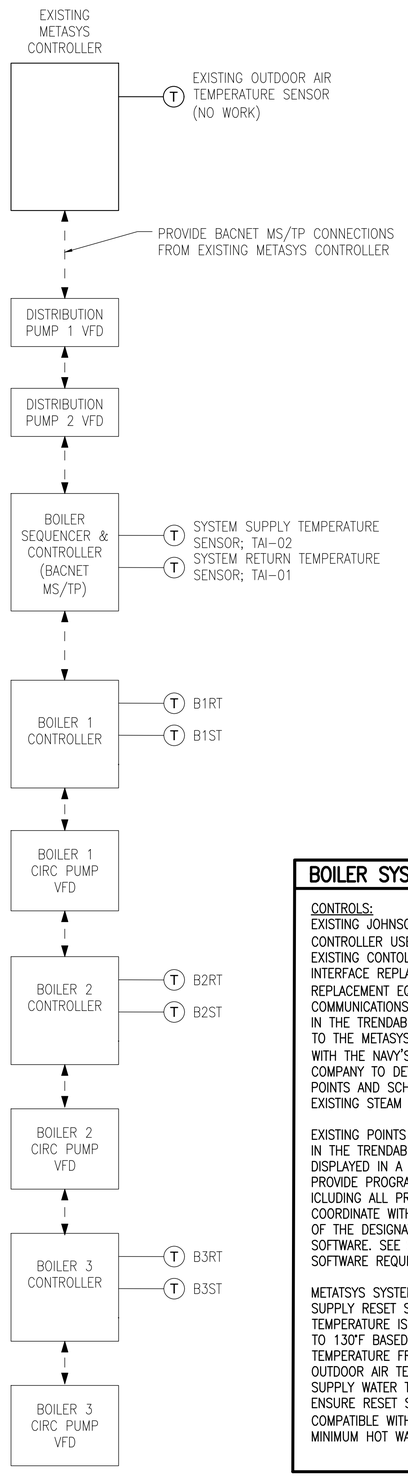

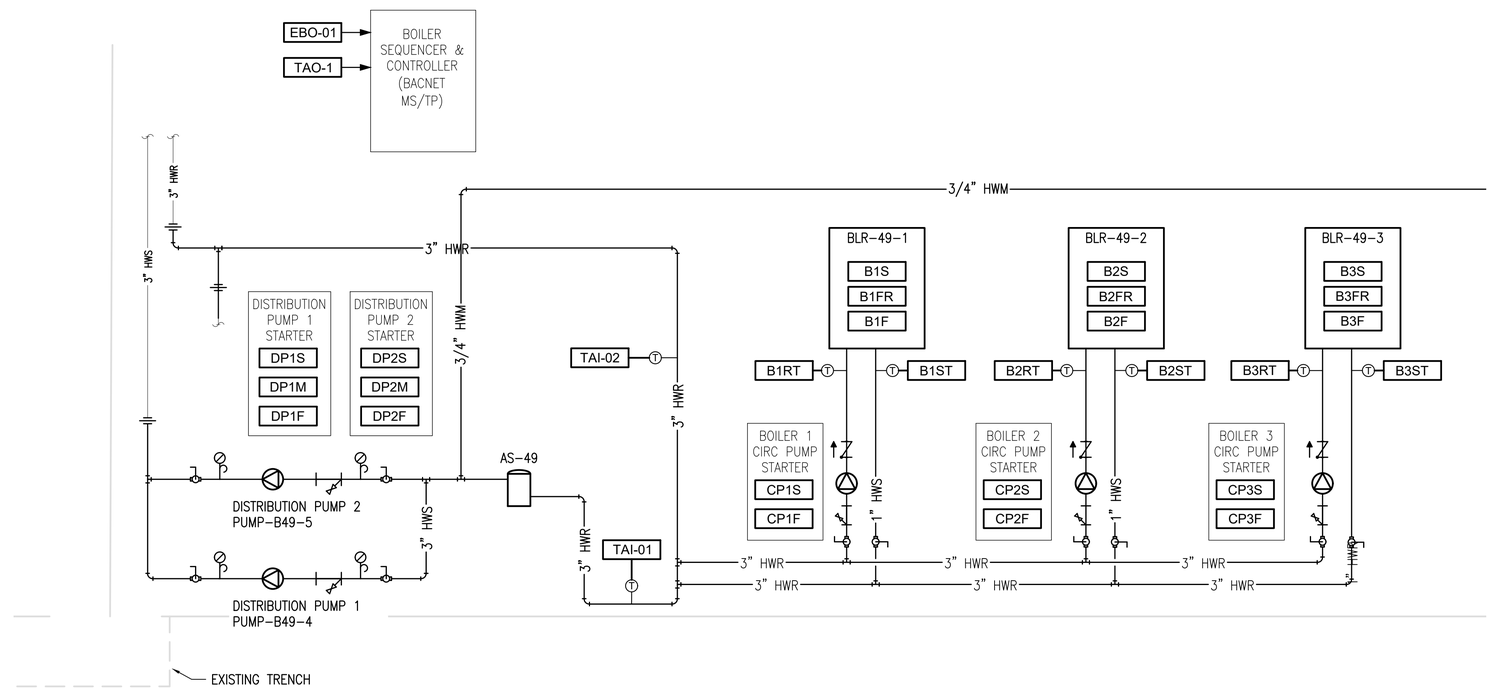

1 M606 B49 HOT WATER CONTROL DIAGRAM

NO SCALE

BOILER SYSTEM NOTES

CONTROLS:
EXISTING JOHNSON CONTROLS METASYS CONTROLLER USES BACNET MS/TP. MODIFY EXISTING CONTOLLERS AS REQUIRED TO INTERFACE REPLACEMENT EQUIPMENT. PROVIDE REPLACEMENT EQUIPMENT WITH BACNET MS/TP COMMUNICATIONS AND MAKE FINDPOINTS LISTED IN THE TRENDABLE POINTS SCHEDULE AVAILABLE TO THE METASYS CONTROLLER. COORDINATE WITH THE NAVY'S CONTROLS MANAGEMENT COMPANY TO DETERMINE EXISTING CONTROL POINTS AND SCHEMES RELATED TO THE EXISTING STEAM SYSTEM.

EXISTING POINTS REMAINING AND POINTS LISTED IN THE TRENDABLE POINTS SCHEDULE SHALL BE DISPLAYED IN A GRAPHICAL USER INTERFACE. PROVIDE PROGRAMING TO DISPLAY SYSTEM ICLUDING ALL PROGRAMMING AND TESTING. COORDINATE WITH THE NAVY FOR THE LOCATION OF THE DESIGNATE COMPUTER THAT HOSTS THIS SOFTWARE. SEE SPECIFICATIONS FOR ADDTIONAL SOFTWARE REQUIREMENTS.

METATSYS SYSTEM SHALL MANAGE HOT WATER SUPPLY RESET SCHEDULE. DESIGN SUPPLY TEMPERATURE IS 180°F AND SHALL RESET DOWN TO 130°F BASED ON AN OUTDOOR AIR TEMPERATURE FROM 30F TO 65F. FOR OUTDOOR AIR TEMPERATURES BELOW 30°F THE SUPPLY WATER TEMPERATURE SHALL BE 180°F. ENSURE RESET SCHEDULE TEMPERATURES ARE COMPATIBLE WITH BOILER MANUFACTURER'S MINIMUM HOT WATER SUPPLY TEMPERATURES.

PACKAGED BOILER CONTROLS:
THE BOILERS SHALL BE PROVIDED WITH A FACTORY PACKAGED CONTROLLER TO MANAGE ALL INTERNAL FUNCTIONS SUCH AS FIRING RATE AND CIRCULATOR PUMP CONTROL. BOILER CONTROLS SHALL PROVIDE ALL POINTS LISTED IN THE POINTS SCHEDULE FOR THE METASYS TO TREND.

PROVIDE BOILERS WITH BACNET COMMUNICATION CARDS. ENSURE THE (3) BOILERS ARE LEAD–LAG SEQUENCED AND COORDINATE THEIR MODULATION RATES TO PROVIDE MAXIMUM EFFICIENCY. USE A FACTORY SUPPLIED BOILER SEQUENCER OR BOILER CONTROLLER IF REQUIRED TO ACHIEVE THIS.

SEQUENCE OF OPPS:
ON A CALL FOR HEAT THE METASYS CONTROLLER SHALL:

1. START THE DISTRIBUTION PUMPS. THE PUMPS ARE DESIGNED TO EACH HANDLE 100% OF THE LOAD IN A LEAD/LAG SCHEME. THE LEAD PUMP SHALL BE CHOSEN BASED ON LESSER RUNTIME.
2. A CALL SHALL BE ISSUED TO THE BOILER SEQUENCER & CONTROLLER.

ON A CALL FOR HEAT THE BOILER SEQUENCER & CONTROLLER SHALL:
1. ENGAGE EACH BOILER AS REQUIRED TO MAINTAIN SYSTEM HOT WATER SUPPLY TEMPERATURE. BOILERS ENGAGEMENT AND MODULATION SHALL BE COORDINATEED TO PROVIDE MAXIMUM EFFICIENCY.
2. WHEN A BOILER IS ENGAGED, THAT BOILER'S CIRC PUMP SHALL START. THE CIRC PUMP SHAL STOP WHEN THE BOILER IS DIS–ENGAGED.
3. A HOT WATER SUPPLY SETPOINT TEMPERATURE SHAL BE SUPPLIED TO THE BOILER CONTROLLER. THIS TEMPERATURE SHALL BE ACCORDING THE EXISTING RESET SCHEDULE WITHIN THE METASYS.

ON A CIRC PUMP FAILURE, THE RELATED BOILER SHALL SHUTDOWN. THE FAULT CODE SHALL BE REPORTED TO THE METASYS AND DISPLAYED IN THE GRAPHICS.

ON A BOILER FAILURE, THE RELATED CIRCULATOR PUMP SHALL SHUTDOWN. THE FAULT CODE SHALL BE REPORTED TO THE METASYS AND DISPLAYED IN THE GRAPHICS.

TRENDABLE POINTS SCHEDULE

POINT	DESCRIPTION	WORK ITEM	TYPE	ALARM CONDITION
EBO-01	CALL FOR HEAT	PROVIDE A BOILER ENABLE SIGNAL THROUGH GATEWAY TO BOILERS	ON / OFF	NONE
TAO-1	SYSTEM SUPPLY SETPOINT TEMP	PROVIDE A REMOTE SETPOINT TEMPERATURE SIGNAL THROUGH GATEWAY TO BOILERS	TEMPERATURE	NONE
TAI-01	SYSTEM RETURN TEMP	PROVIDE FIELD SENSOR, AND MAKE AVAILABLE TO METASYS THROUGH GATEWAY	TEMPERATURE	LOW / HIGH
TAI-02	SYSTEM SUPPLY TEMP	PROVIDE FIELD SENSOR, AND MAKE AVAILABLE TO METASYS THROUGH GATEWAY	TEMPERATURE	LOW / HIGH
CP1S	CIRC PUMP 1 STATUS	PROVIDE STARTER WITH BACNET	ON / OFF	NONE
CP2S	CIRC PUMP 2 STATUS	PROVIDE STARTER WITH BACNET	ON / OFF	NONE
CP3S	CIRC PUMP 3 STATUS	PROVIDE STARTER WITH BACNET	ON / OFF	NONE
CP1F	CIRC PUMP 1 FAULT	PROVIDE STARTER WITH BACNET	FAULT DESCRIPTION	FAULT PRESENT
CP2F	CIRC PUMP 2 FAULT	PROVIDE STARTER WITH BACNET	FAULT DESCRIPTION	FAULT PRESENT
CP3F	CIRC PUMP 3 FAULT	PROVIDE STARTER WITH BACNET	FAULT DESCRIPTION	FAULT PRESENT
B1S	BOILER 1 STATUS	PROVIDE BOILER CONTORLS WITH BACNET	ON / OFF / STBY	NONE
B2S	BOILER 2 STATUS	PROVIDE BOILER CONTORLS WITH BACNET	ON / OFF / STBY	NONE
B3S	BOILER 3 STATUS	PROVIDE BOILER CONTORLS WITH BACNET	ON / OFF / STBY	NONE
B1F	BOILER 1 FAULT	PROVIDE BOILER CONTORLS WITH BACNET	FAULT DESCRIPTION	FAULT PRESENT
B2F	BOILER 2 FAULT	PROVIDE BOILER CONTORLS WITH BACNET	FAULT DESCRIPTION	FAULT PRESENT
B3F	BOILER 3 FAULT	PROVIDE BOILER CONTORLS WITH BACNET	FAULT DESCRIPTION	FAULT PRESENT
B1R	BOILER 1 FIRING RATE	PROVIDE BOILER CONTORLS WITH BACNET	[%]	NONE
B2R	BOILER 2 FIRING RATE	PROVIDE BOILER CONTORLS WITH BACNET	[%]	NONE
B3R	BOILER 3 FIRING RATE	PROVIDE BOILER CONTORLS WITH BACNET	[%]	NONE
B1ST	BOILER 1 SUPPLY TEMP	PROVIDE BOILER CONTORLS WITH BACNET	TEMPERATURE	LOW / HIGH
B2ST	BOILER 2 SUPPLY TEMP	PROVIDE BOILER CONTORLS WITH BACNET	TEMPERATURE	LOW / HIGH
B3ST	BOILER 3 SUPPLY TEMP	PROVIDE BOILER CONTORLS WITH BACNET	TEMPERATURE	LOW / HIGH
B1RT	BOILER 1 RETURN TEMP	PROVIDE BOILER CONTORLS WITH BACNET	TEMPERATURE	LOW / HIGH
B2RT	BOILER 2 RETURN TEMP	PROVIDE BOILER CONTORLS WITH BACNET	TEMPERATURE	LOW / HIGH
B3RT	BOILER 3 RETURN TEMP	PROVIDE BOILER CONTORLS WITH BACNET	TEMPERATURE	LOW / HIGH
DP1S	DISTRIBUTION PUMP 1 STATUS	PROVIDE STARTER WITH BACNET	ON / OFF	NONE
DP2S	DISTRIBUTION PUMP 2 STATUS	PROVIDE STARTER WITH BACNET	ON / OFF	NONE
DP1F	DISTRIBUTION PUMP 1 FAULT	PROVIDE STARTER WITH BACNET	FAULT DESCRIPTION	FAULT PRESENT
DP2F	DISTRIBUTION PUMP 2 FAULT	PROVIDE STARTER WITH BACNET	FAULT DESCRIPTION	FAULT PRESENT

NOTES:
FOR ALARM STATUS COLUMN, PROGRAM THE CONTROLLER TO DISPLAY AN ALARM IN THE GRAPHICAL SYSTEM WHEN ALARM CONDITION IS OCCURS

NAVSTA DRAWING NO. 44544–412

SYM	DESCRIPTION	DATE	APPR

NAVFAC

AMES & WHITAKER Architects

BID SET SUBMISSION

12/30/19

DES KWK DRW GJG CHK KWK

<<PM/DM>> RC

BRANCH MANAGER XX

CHIEF ENG/ARCH XXX

<<XXX>> XX

DEPARTMENT OF THE NAVY
NAVAL FACILITIES ENGINEERING COMMAND
NORTHEAST IPT
NAVAL FACILITIES ENGINEERING COMMAND ~ MID-ATLANTIC
NAVAL STATION – NORFOLK, VIRGINIA
NAVAL STATION NEWPORT
NEWPORT, RI

DECENTRALIZE STEAM AT BOILER PLANT A6

MECHANICAL CONTROL DIAGRAMS

SCALE: AS NOTED

EPROJECT NO.: 1389839

CONSTR. CONTR. NO.

NAVFAC DRAWING NO. 12799485

SHEET 55 OF 65

M606

DRAWFORM REVISION: 10 MARCH 2009

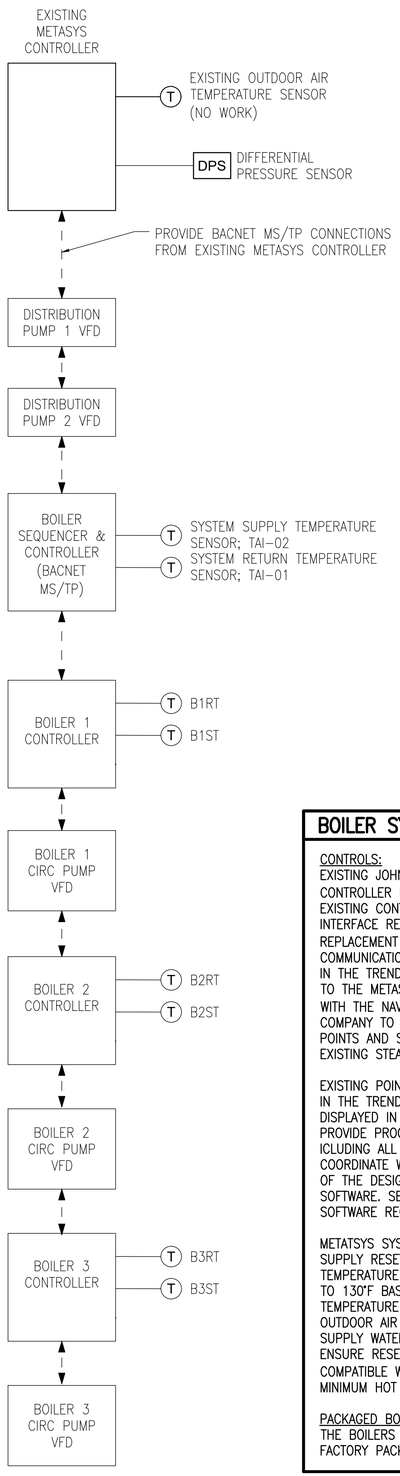

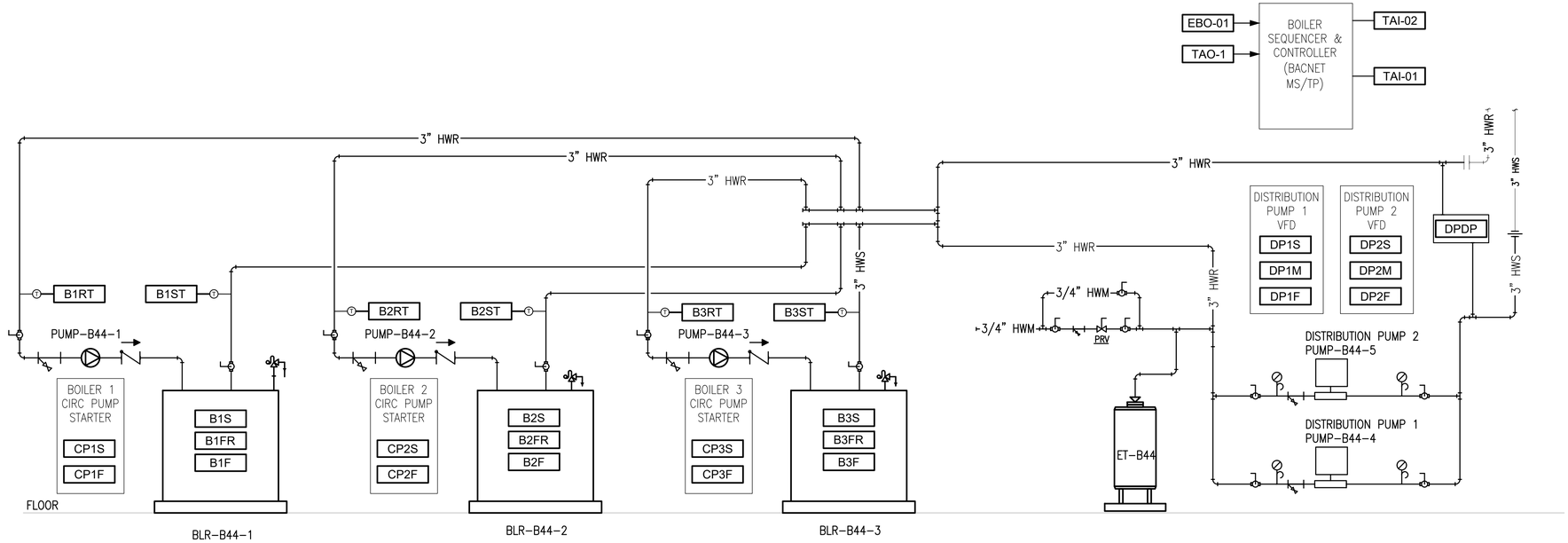

1 / M607 B44 HOT WATER CONTROL DIAGRAM

NO SCALE

BOILER SYSTEM NOTES

CONTROLS:
EXISTING JOHNSON CONTROLS METASYS CONTROLLER USES BACNET MS/TP. MODIFY EXISTING CONTOLLERS AS REQUIRED TO INTERFACE REPLACEMENT EQUIPMENT. PROVIDE REPLACEMENT EQUIPMENT WITH BACNET MS/TP COMMUNICATIONS AND MAKE FINDPOINTS LISTED IN THE TRENDABLE POINTS SCHEDULE AVAILABLE TO THE METASYS CONTROLLER. COORDINATE WITH THE NAVY'S CONTROLS MANAGEMENT COMPANY TO DETERMINE EXISTING CONTROL POINTS AND SCHEMES RELATED TO THE EXISTING STEAM SYSTEM.

EXISTING POINTS REMAINING AND POINTS LISTED IN THE TRENDABLE POINTS SCHEDULE SHALL BE DISPLAYED IN A GRAPHICAL USER INTERFACE. PROVIDE PROGRAMING TO DISPLAY SYSTEM ICLUDING ALL PROGRAMMING AND TESTING. COORDINATE WITH THE NAVY FOR THE LOCATION OF THE DESIGNATE COMPUTER THAT HOSTS THIS SOFTWARE. SEE SPECIFICATIONS FOR ADDTIONAL SOFTWARE REQUIREMENTS.

METATSYS SYSTEM SHALL MANAGE HOT WATER SUPPLY RESET SCHEDULE. DESIGN SUPPLY TEMPERATURE IS 180°F AND SHALL RESET DOWN TO 130°F BASED ON AN OUTDOOR AIR TEMPERATURE FROM 30F TO 65F. FOR OUTDOOR AIR TEMPERATURES BELOW 30°F THE SUPPLY WATER TEMPERATURE SHALL BE 180°F. ENSURE RESET SCHEDULE TEMPERATURES ARE COMPATIBLE WITH BOILER MANUFACTURER'S MINIMUM HOT WATER SUPPLY TEMPERATURES.

PACKAGED BOILER CONTROLS:
THE BOILERS SHALL BE PROVIDED WITH A FACTORY PACKAGED CONTROLLER TO MANAGE ALL INTERNAL FUNCTIONS SUCH AS FIRING RATE AND CIRCULATOR PUMP CONTROL. BOILER CONTROLS SHALL PROVIDE ALL POINTS LISTED IN THE POINTS SCHEDULE FOR THE METASYS TO TREND.

PROVIDE BOILERS WITH BACNET COMMUNICATION CARDS. ENSURE THE (3) BOILERS ARE LEAD–LAG SEQUENCED AND COORDINATE THEIR MODULATION RATES TO PROVIDE MAXIMUM EFFICIENCY. USE A FACTORY SUPPLIED BOILER SEQUENCER OR BOILER CONTROLLER IF REQUIRED TO ACHIEVE THIS.

SEQUENCE OF OPPS:
ON A CALL FOR HEAT THE METASYS CONTROLLER SHALL:

1. START A DISTRIBUTION PUMP. THE METASYS SHALL BE PROGRAMMED TO OPERATE DISTRIBUTION PUMPS 1 & 2 IN A LEAD–LAG ARRANGEMENT. THE LEAD PUMP SHALL BE SELECTED ON THE DDC RUN TIME. THE PUMP WITH THE LOWEST RUN TIME SHALL BE SELECTED AS LEAD.
2. THE METASYS SHALL MODULATE THE LEAD PUMP TO MAINTAIN DIFFERENTIAL PRESSURE.
3. A CALL FOR HEAT SHALL BE ISSUED TO THE BOILER SEQUENCER & CONTROLLER.
4. A HOW WATER SUPPLY TEMPERATURE SHALL BE PROVIDED TO THE BOILER CONTROLLER. THIS SUPPLY TEMPERATURE SHALL BE BASED ON THE EXISTNIG RESET SCHEDULE.

ON A CALL FOR HEAT THE BOILER SEQUENCER & CONTROLLER SHALL:
1. ENGAGE EACH BOILER AS REQUIRED TO MAINTAIN SYSTEM HOT WATER SUPPLY TEMPERATURE. BOILER ENGAGEMENT AND MODULATION SHALL BE COORDINATEED TO PROVIDE MAXIMUM EFFICIENCY.
2. WHEN A BOILER IS ENGAGED, THAT BOILER'S CIRC PUMP SHALL START. THE CIRC PUMP SHAL STOP WHEN THE BOILER IS DIS–ENGAGED.

ON A CIRC PUMP FAILURE, THE RELATED BOILER SHALL SHUTDOWN. THE FAULT CODE SHALL BE REPORTED TO THE METASYS AND DISPLAYED IN THE GRAPHICS.

ON A BOILER FAILURE, THE RELATED CIRCULATOR PUMP SHALL SHUTDOWN. THE FAULT CODE SHALL BE REPORTED TO THE METASYS AND DISPLAYED IN THE GRAPHICS.

TRENDABLE POINTS SCHEDULE

POINT	DESCRIPTION	WORK ITEM	TYPE	ALARM CONDITION
EBO-01	CALL FOR HEAT	PROVIDE A BOILER ENABLE SIGNAL THROUGH GATEWAY TO BOILERS	ON / OFF	NONE
TAO-1	SYSTEM SUPPLY SETPOINT TEMP	PROVIDE A REMOTE SETPOINT TEMPERATURE SIGNAL THROUGH GATEWAY TO BOILERS	TEMPERATURE	NONE
TAI-01	SYSTEM RETURN TEMP	PROVIDE FIELD SENSOR, AND MAKE AVAILABLE TO METASYS THROUGH GATEWAY	TEMPERATURE	LOW / HIGH
TAI-02	SYSTEM SUPPLY TEMP	PROVIDE FIELD SENSOR, AND MAKE AVAILABLE TO METASYS THROUGH GATEWAY	TEMPERATURE	LOW / HIGH
CP1S	CIRC PUMP 1 STATUS	PROVIDE STARTER WITH BACNET	ON / OFF	NONE
CP2S	CIRC PUMP 2 STATUS	PROVIDE STARTER WITH BACNET	ON / OFF	NONE
CP3S	CIRC PUMP 3 STATUS	PROVIDE STARTER WITH BACNET	ON / OFF	NONE
CP1F	CIRC PUMP 1 FAULT	PROVIDE STARTER WITH BACNET	FAULT DESCRIPTION	FAULT PRESENT
CP2F	CIRC PUMP 2 FAULT	PROVIDE STARTER WITH BACNET	FAULT DESCRIPTION	FAULT PRESENT
CP3F	CIRC PUMP 3 FAULT	PROVIDE STARTER WITH BACNET	FAULT DESCRIPTION	FAULT PRESENT
B1S	BOILER 1 STATUS	PROVIDE BOILER CONTORLS WITH BACNET	ON / OFF / STBY	NONE
B2S	BOILER 2 STATUS	PROVIDE BOILER CONTORLS WITH BACNET	ON / OFF / STBY	NONE
B3S	BOILER 3 STATUS	PROVIDE BOILER CONTORLS WITH BACNET	ON / OFF / STBY	NONE
B1F	BOILER 1 FAULT	PROVIDE BOILER CONTORLS WITH BACNET	FAULT DESCRIPTION	FAULT PRESENT
B2F	BOILER 2 FAULT	PROVIDE BOILER CONTORLS WITH BACNET	FAULT DESCRIPTION	FAULT PRESENT
B3F	BOILER 3 FAULT	PROVIDE BOILER CONTORLS WITH BACNET	FAULT DESCRIPTION	FAULT PRESENT
B1R	BOILER 1 FIRING RATE	PROVIDE BOILER CONTORLS WITH BACNET	[%]	NONE
B2R	BOILER 2 FIRING RATE	PROVIDE BOILER CONTORLS WITH BACNET	[%]	NONE
B3R	BOILER 3 FIRING RATE	PROVIDE BOILER CONTORLS WITH BACNET	[%]	NONE
B1ST	BOILER 1 SUPPLY TEMP	PROVIDE BOILER CONTORLS WITH BACNET	TEMPERATURE	LOW / HIGH
B2ST	BOILER 2 SUPPLY TEMP	PROVIDE BOILER CONTORLS WITH BACNET	TEMPERATURE	LOW / HIGH
B3ST	BOILER 3 SUPPLY TEMP	PROVIDE BOILER CONTORLS WITH BACNET	TEMPERATURE	LOW / HIGH
B1RT	BOILER 1 RETURN TEMP	PROVIDE BOILER CONTORLS WITH BACNET	TEMPERATURE	LOW / HIGH
B2RT	BOILER 2 RETURN TEMP	PROVIDE BOILER CONTORLS WITH BACNET	TEMPERATURE	LOW / HIGH
B3RT	BOILER 3 RETURN TEMP	PROVIDE BOILER CONTORLS WITH BACNET	TEMPERATURE	LOW / HIGH
DP1S	DISTRIBUTION PUMP 1 STATUS	PROVIDE VFD WITH BACNET	ON / OFF	NONE
DP2S	DISTRIBUTION PUMP 2 STATUS	PROVIDE VFD WITH BACNET	ON / OFF	NONE
DP1M	DISTRIBUTION PUMP 1 SPEED	PROVIDE VFD WITH BACNET	[%]	NONE
DP2M	DISTRIBUTION PUMP 2 SPEED	PROVIDE VFD WITH BACNET	[%]	NONE
DP1F	DISTRIBUTION PUMP 1 FAULT	PROVIDE VFD WITH BACNET	FAULT DESCRIPTION	FAULT PRESENT
DP2F	DISTRIBUTION PUMP 2 FAULT	PROVIDE VFD WITH BACNET	FAULT DESCRIPTION	FAULT PRESENT
DPDP	DIFFERENTIAL PRESURE SENSOR	PROVIDE FIELD SENSOR, AND MAKE AVAILABLE TO METASYS THROUGH GATEWAY	PRESSURE	HIGH

NOTES:
FOR ALARM STATUS COLUMN, PROGRAM THE CONTROLLER TO DISPLAY AN ALARM IN THE GRAPHICAL SYSTEM WHEN ALARM CONDITION IS OCCURS

NAVSTA DRAWING NO. 44545–412

APPR. | DATE | DESCRIPTION | SYM

NAVFAC

AMES & WHITAKER Architects

BID SET SUBMISSION

12/30/19

DES KWK | DRW GJG | CHK KWK
<<PM/DM>> RC
BRANCH MANAGER XX
CHIEF ENG/ARCH XXX
<<XXX>> XX

DEPARTMENT OF THE NAVY
NAVAL FACILITIES ENGINEERING COMMAND
NORTHEAST IPT
NAVAL FACILITIES ENGINEERING COMMAND – MID-ATLANTIC
NAVAL STATION – NORFOLK, VIRGINIA
NAVAL STATION NEWPORT
NEWPORT, RI
DECENTRALIZE STEAM AT BOILER PLANT A6
MECHANICAL CONTROL DIAGRAMS

SCALE: AS NOTED
EPROJECT NO.: 1389839
CONSTR. CONTR. NO.
NAVFAC DRAWING NO. 12799486
SHEET 56 OF 65

M607

DRAWFORM REVISION: 10 MARCH 2009

BOILER SCHEDULE												
DESIGNATION	BLR-B23A-1	BLR-B23A-2	BLR-B23A-3	BLR-B43-1	BLR-B43-2	BLR-B43-3	BLR-B44-1	BLR-B44-2	BLR-B44-3	BLR-B49-1	BLR-B49-2	BLR-B49-3
SERVICE	BUILDING B23 HEATING SYSTEM	BUILDING B23 HEATING SYSTEM	BUILDING B23 HEATING SYSTEM	BUILDING B43 HEATING SYSTEM	BUILDING B43 HEATING SYSTEM	BUILDING B43 HEATING SYSTEM	BUILDING B44 HEATING SYSTEM	BUILDING B44 HEATING SYSTEM	BUILDING B44 HEATING SYSTEM	BUILDING B49 HEATING SYSTEM	BUILDING B49 HEATING SYSTEM	BUILDING B49 HEATING SYSTEM
DESCRIPTION	STAINLESS STEEL HEAT EXCHANGER CONDENSING GAS BOILER	STAINLESS STEEL HEAT EXCHANGER CONDENSING GAS BOILER	STAINLESS STEEL HEAT EXCHANGER CONDENSING GAS BOILER	STAINLESS STEEL HEAT EXCHANGER CONDENSING GAS BOILER	STAINLESS STEEL HEAT EXCHANGER CONDENSING GAS BOILER	STAINLESS STEEL HEAT EXCHANGER CONDENSING GAS BOILER	STAINLESS STEEL HEAT EXCHANGER CONDENSING GAS BOILER	STAINLESS STEEL HEAT EXCHANGER CONDENSING GAS BOILER	STAINLESS STEEL HEAT EXCHANGER CONDENSING GAS BOILER	STAINLESS STEEL HEAT EXCHANGER CONDENSING GAS BOILER	STAINLESS STEEL HEAT EXCHANGER CONDENSING GAS BOILER	STAINLESS STEEL HEAT EXCHANGER CONDENSING GAS BOILER
BUILDING LOAD (MBH)	4,250	4,250	4,250	1,246	1,246	1,246	790	790	790	250	250	250
BOILER LOAD % OF BUILDING LOAD	50	50	50	50	50	50	50	50	50	50	50	50
BOILER LOAD (MBH)	2,125	2,125	2,125	623	623	623	395	395	395	125	125	125
HEAT INPUT GAS (MBH)	2,500	2,500	2,500	800	800	800	500	500	500	150	150	150
HEAT GROSS OUTPUT GAS (MBH), NOTE 1	2,200	2,200	2,200	712	712	712	445	445	445	133	133	133
THERMAL EFFICIENCY (%), NOTE 1	88	88	88	89	89	89	89	89	89	89	89	89
FLUID TYPE	WATER	WATER	WATER	WATER	WATER	WATER	WATER	WATER	WATER	WATER	WATER	WATER
EWT (°F)	160	160	160	160	160	160	160	160	160	160	160	160
LWT (°F)	180	180	180	180	180	180	180	180	180	180	180	180
FLOW RATE (GPM)	220	220	220	71.2	71.2	71.2	44.5	44.5	44.5	13.3	13.3	13.3
PRESSURE DROP (FT H2O)	14	14	14	14	14	14	13	13	13	10	10	10
RELEIEF VALVE PRESSURE (PSIG)	75	75	75	60	60	60	60	60	60	50	50	50
BURNER FIRING RATE TURNDOWN	5 TO 1	5 TO 1	5 TO 1	5 TO 1	5 TO 1	5 TO 1	5 TO 1	5 TO 1	5 TO 1	10 TO 1	10 TO 1	10 TO 1
ASME LABELED	PROVIDE	PROVIDE	PROVIDE	PROVIDE	PROVIDE	PROVIDE	PROVIDE	PROVIDE	PROVIDE	PROVIDE	PROVIDE	PROVIDE
VENT SIZE, DIA. (IN), NOTE 3	10	10	10	6	6	6	4	4	4	3	3	3
VENT MATERIAL, NOTE 3	STAINLESS STEEL (AL29-4C, UL 1738 & UL 1777 LISTED)	STAINLESS STEEL (AL29-4C, UL 1738 & UL 1777 LISTED)	STAINLESS STEEL (AL29-4C, UL 1738 & UL 1777 LISTED)	STAINLESS STEEL (AL29-4C, UL 1738 & UL 1777 LISTED)	STAINLESS STEEL (AL29-4C, UL 1738 & UL 1777 LISTED)	STAINLESS STEEL (AL29-4C, UL 1738 & UL 1777 LISTED)	SCHEDULE 40 CPVC (ASTM F441)	SCHEDULE 40 CPVC (ASTM F441)	SCHEDULE 40 CPVC (ASTM F441)	SCHEDULE 40 CPVC (ASTM F441)	SCHEDULE 40 CPVC (ASTM F441)	SCHEDULE 40 CPVC (ASTM F441)
AIR INTAKE SIZE, DIA. (IN), NOTE 3	10	10	10	4	4	4	4	4	4	3	3	3
AIR INTAKE MATERIAL, NOTE 3	316 STAINLESS STEEL	316 STAINLESS STEEL	316 STAINLESS STEEL	SCHEDULE 40 CPVC (ASTM F441)	SCHEDULE 40 CPVC (ASTM F441)	SCHEDULE 40 CPVC (ASTM F441)	SCHEDULE 40 CPVC (ASTM F441)	SCHEDULE 40 CPVC (ASTM F441)	SCHEDULE 40 CPVC (ASTM F441)	SCHEDULE 40 CPVC (ASTM F441)	SCHEDULE 40 CPVC (ASTM F441)	SCHEDULE 40 CPVC (ASTM F441)
HYDRONIC SUPPLY SIZE (IN)	4	4	4	2	2	2	2	2	2	1	1	1
HYDRONIC RETURN SIZE (IN)	4	4	4	2	2	2	2	2	2	1	1	1
CONDENSATE NUETRALIZER KIT	PROVIDE	PROVIDE	PROVIDE	PROVIDE	PROVIDE	PROVIDE	PROVIDE	PROVIDE	PROVIDE	PROVIDE	PROVIDE	PROVIDE
ACCESSORIES	NOTE 2	NOTE 2	NOTE 2	NOTE2	NOTE2	NOTE2	NOTE 2	NOTE 2	NOTE 2	NOTE2	NOTE2	NOTE2
CONCRET PAD	PROVIDE	PROVIDE	PROVIDE	PROVIDE	PROVIDE	PROVIDE	PROVIDE	PROVIDE	PROVIDE	PROVIDE	PROVIDE	PROVIDE
LOCAL ELECTRICAL DISCONNECT	PROVIDE	PROVIDE	PROVIDE	PROVIDE	PROVIDE	PROVIDE	PROVIDE	PROVIDE	PROVIDE	PROVIDE	PROVIDE	PROVIDE
ELECTRICAL (V/PH/HZ)	208/1/60	208/1/60	208/1/60	120/1/60	120/1/60	120/1/60	120/1/60	120/1/60	120/1/60	120/1/60	120/1/60	120/1/60
ELECTRICAL FLA (AMPS)	5.5	5.5	5.5	8	8	8	<6	<6	<6			
ELECTRICAL MOCP (AMPS)	15	15	15	15	15	15	15	15	15	15	15	15
DIMENSIONS, LENGTH X HEIGHT X WIDTH (IN)	83 X 48 X 46	83 X 48 X 46	83 X 48 X 46	54 X 35 X 17	54 X 35 X 17	54 X 35 X 17	50 X 35 X 17	50 X 35 X 17	50 X 35 X 17	29 X 20 X 17	29 X 20 X 17	29 X 20 X 17
WEIGHT DRY (LBS)	1770	1770	1770	500	500	500	368	368	368	188	188	188

NOTES:
1. EFFICENCY BASED ON 180°F LWT & 160°F EWT.
2. SEE SPECIFICATIONS FOR ADDITIONAL BOILER REQUIREMENTS.
3. ALL INTAKE AND VENT SYSTEM MATERIALS, SYSTEMS & MANUFACTURERS MUST BE COMPATIBLE AND LISTED TO BE USED WITH BOILER. INTAKE AND VENT SYSTEM DESIGN AND SIZING SHALL BE BASED ON MANUFACTURER'S INSTALLATION REQUIRMENTS.

PUMP SCHEDULE																
DESIGNATION	PUMP-B23A-1	PUMP-B23A-2	PUMP-B23A-3	PUMP-B43-1	PUMP-B43-2	PUMP-B43-3	PUMP-B44-1	PUMP-B44-2	PUMP-B44-3	PUMP-B44-4	PUMP-B44-5	PUMP-B49-1	PUMP-B49-2	PUMP-B49-3	PUMP-B49-4	PUMP-B49-5
SERVICE	BLR-B23A-1	BLR-B23A-2	BLR-B23A-3	BLR-B43-1	BLR-B43-2	BLR-B43-3	BLR-B44-1	BLR-B44-2	BLR-B44-3	HEATING SYSTEM	HEATING SYSTEM	BLR-B49-1	BLR-B49-2	BLR-B49-3	HEATING SYSTEM	HEATING SYSTEM
DESCRIPTION	VERTICAL INLINE PUMP CAST IRON BRONZE FITTED	VERTICAL INLINE PUMP CAST IRON BRONZE FITTED	VERTICAL INLINE PUMP CAST IRON BRONZE FITTED	INLINE ECM MOTOR PUMP	INLINE ECM MOTOR PUMP	INLINE ECM MOTOR PUMP	INLINE ECM MOTOR PUMP	INLINE ECM MOTOR PUMP	INLINE ECM MOTOR PUMP	VERTICAL INLINE PUMP CAST IRON BRONZE FITTED	VERTICAL INLINE PUMP CAST IRON BRONZE FITTED	INLINE ECM MOTOR PUMP	INLINE ECM MOTOR PUMP	INLINE ECM MOTOR PUMP	VERTICAL INLINE PUMP CAST IRON BRONZE FITTED	VERTICAL INLINE PUMP CAST IRON BRONZE FITTED
FLOW RATE (GPM)	220	220	220	71.2	71.2	71.2	44.5	44.5	44.5	80	80	13.33	13.33	13.33	25	25
TOTAL DYNAMIC HEAD (FT^H2O)	24	24	24	24	24	24	23	23	23	52	52	15	15	15	40	40
FLUID	WATER	WATER	WATER	WATER	WATER	WATER	WATER	WATER	WATER	WATER	WATER	WATER	WATER	WATER	WATER	WATER
FLUID TEMP RANGE (°F)	120 TO 180	120 TO 180	120 TO 180	120 TO 180	120 TO 180	120 TO 180	120 TO 180	120 TO 180	120 TO 180	120 TO 180	120 TO 180	120 TO 180	120 TO 180	120 TO 180	120 TO 180	120 TO 180
CASING MATERIAL	CAST IRON	CAST IRON	CAST IRON	CAST IRON	CAST IRON	CAST IRON	CAST IRON	CAST IRON	CAST IRON	CAST IRON	CAST IRON	CAST IRON	CAST IRON	CAST IRON	CAST IRON	CAST IRON
TRIPLE DUTY VALVE (TDV)	PROVIDE	PROVIDE	PROVIDE	N/A	N/A	N/A	N/A	N/A	N/A	PROVIDE	PROVIDE	N/A	N/A	N/A	PROVIDE	PROVIDE
END SUCTION DIFFUSER	N/A	N/A	N/A	N/A	N/A	N/A	N/A	N/A	N/A	PROVIDE	PROVIDE	N/A	N/A	N/A	PROVIDE	PROVIDE
CONCRETE PAD	N/A	N/A	N/A	N/A	N/A	N/A	N/A	N/A	N/A	N/A	N/A	N/A	N/A	N/A	N/A	N/A
MOTOR TYPE	HIGH EFFICIENCY, VFD RATED	HIGH EFFICIENCY, VFD RATED	HIGH EFFICIENCY, VFD RATED	ECM	ECM	ECM	ECM	ECM	ECM	HIGH EFFICIENCY, VFD RATED	HIGH EFFICIENCY, VFD RATED	ECM	ECM	ECM	HIGH EFFICIENCY	HIGH EFFICIENCY
MOTOR BHP	1.75	1.75	1.75	N/A	N/A	N/A	N/A	N/A	N/A	N/A	N/A	N/A	N/A	N/A	0.6	0.6
MOTOR HP	3	3	3	1.5	1.5	1.5	0.7	0.7	0.7	3	3	1/6	1/6	1/6	1	1
MOTOR RPM	1160	1160	1160							1760	1760	3250	3250	3250	1760	1760
ELECTRICAL DRIVE / STARTER TYPE	WALL MOUNTED VARIABLE FREQUENCY DRIVE	WALL MOUNTED VARIABLE FREQUENCY DRIVE	WALL MOUNTED VARIABLE FREQUENCY DRIVE	ECM MOTOR MOUNTED CONTROL	ECM MOTOR MOUNTED CONTROL	ECM MOTOR MOUNTED CONTROL	ECM MOTOR MOUNTED CONTROL	ECM MOTOR MOUNTED CONTROL	ECM MOTOR MOUNTED CONTROL	PUMP MOUTED VFD DRIVE	PUMP MOUTED VFD DRIVE	ECM MOTOR MOUNTED CONTROL	ECM MOTOR MOUNTED CONTROL	ECM MOTOR MOUNTED CONTROL	STARTER	STARTER
LOCAL ELECTRICAL DISCONNECT	PROVIDE	PROVIDE	PROVIDE	PROVIDE	PROVIDE	PROVIDE	PROVIDE	PROVIDE	PROVIDE	PROVIDE	PROVIDE	PROVIDE	PROVIDE	PROVIDE	PROVIDE	PROVIDE
ELECTRICAL (V/PH/HZ)	480/3/60	480/3/60	480/3/60	208/1/60	208/1/60	208/1/60	120/1/60	120/1/60	120/1/60	208/3/60	208/3/60	120/1/60	120/1/60	120/1/60	208/1/60	208/1/60

SYM	DESCRIPTION	DATE	APPR

NAVFAC

AMES & WHITAKER Architects

BID SET SUBMISSION

12/30/19

DES KWK | DRW GJG | CHK KWK

<<PM/DM>> RC

BRANCH MANAGER XX

CHIEF ENG/ARCH XXX

<<XXX>> XX

DEPARTMENT OF THE NAVY
NAVAL FACILITIES ENGINEERING COMMAND
NORTHEAST IPT

NAVAL FACILITIES ENGINEERING COMMAND ~ MID-ATLANTIC
NAVAL STATION – NORFOLK, VIRGINIA

NAVAL STATION NEWPORT
NEWPORT, RI

DECENTRALIZE STEAM AT BOILER PLANT A6

MECHANICAL SCHEDULES

SCALE: AS NOTED

EPROJECT NO.: 1389839

CONSTR. CONTR. NO.

NAVFAC DRAWING NO. 12799487

SHEET 57 OF 65

NAVSTA DRAWING NO. 44546–412

M608

DRAWFORM REVISION: 10 MARCH 2009

MECHANICAL PIPING MATERIAL SCHEDULE						
PIPING SYSTEM	ABBREVIATION	OPERATING TEMPERATURE (°F) OR PRESSURE (PSI)	SERVICE PRESSURE (PSI)	PIPE DIAMETER, NPS (INCH)	PIPE MATERIAL \ SCHEDULE OR TYPE \ SPECIFICATION	JOINT MATERIAL \ TYPE \ SPECIFICATION
HOT WATER	HWS & HWR	180°F - 160°F	150	0.5 - 2.0	CPR \ L \ ASTM B88 HARD DRAWN	WC \ SOLDER SOCKET \ ASME B16.22
HOT WATER	HWS & HWR	180°F - 160°F	125	2.5 - 3.0	BCS \ 40 \ ASTM A53 GRADE B TYPE S OR E	MI \ THREADED \ ASME B16.3
HOT WATER	HWS & HWR	180°F - 160°F	125	4.0 - 8.0	BCS \ 40 \ ASTM A53 GRADE B TYPE S OR E	BCS \ WELDED \ ASME B16.9 BCS \ FLANGED \ ASME B16.5
MAKE-UP WATER	MU	55°F	N/A	0.5 - 4.0	CPR \ L \ ASTM B88 HARD DRAWN	WC \ SOLDER SOCKET \ ASME B16.22
DRAIN	D	50°F - 200°F	N/A	0.5 - 4.0	CPR \ L \ ASTM B88 HARD DRAWN	WC \ SOLDER SOCKET \ ASME B16.22
LOW PRESSRE NATURAL GAS	G	0.02 PSIG > 2.0 PSIG	125	0.5 - 2.0	BCS \ 40 \ ASTM A53 GRADE B TYPE S OR E	MI \ THREADED \ ASME B16.3
LOW PRESSRE NATURAL GAS	G	0.02 PSIG > 2 PSIG	125	2.5 - 6.0	BCS \ 40 \ ASTM A53 GRADE B TYPE S OR E	BCS \ WELDED \ ASME B16.9
MEDIUM PRESSURE NATURAL GAS	MPG	2 PSIG < 5 PSIG	125	0.5 - 2.0	BCS \ 40 \ ASTM A53 GRADE B TYPE S OR E	MI \ THREADED \ ASME B16.3
MEDIUM PRESSURE NATURAL GAS	MPG	2 PSIG < 5 PSIG	125	2.5 - 6.0	BCS \ 40 \ ASTM A53 GRADE B TYPE S OR E	BCS \ WELDED \ ASME B16.9
HIGH PRESSURE NATURAL GAS	HPG	5 PSIG < 20 PSIG	125	0.5 - 2.0	BCS \ 40 \ ASTM A53 GRADE B TYPE S OR E	MI \ THREADED \ ASME B16.3
HIGH PRESSURE NATURAL GAS	HPG	5 PSIG < 20 PSIG	125	2.5 - 6.0	BCS \ 40 \ ASTM A53 GRADE B TYPE S OR E	BCS \ WELDED \ ASME B16.9
NATURAL GAS VENT	GV	N/A	125	0.5 - 2.0	BCS \ 40 \ ASTM A53 GRADE B TYPE S OR E	MI \ THREADED \ ASME B16.3

NOTES
1. VALVE JOINT TYPE INCLUDES OTHER VALVES AND ITEMS NOT SHOWN IN SCHEDULE (I.E. STRAINERS, BALANCING VALVES)
2. DRAWINGS MAY INDICATE DIFFERENT VALVE TYPE. VALVE TYPE SHALL BE AS SHOWN ON DRAWINGS UNLESS OTHERWISE INDICATED.
3. MXIMUM WORKING PRESSURE OF 62 PSI AT 180°F.

PIPE MATERIAL SCHEDULE	
BCS	BLACK CARBON STEEL
CPR	COPPER

JOINT MATERIAL SCHEDULE	
BCS	BLACK CARBON STEEL
CI	CAST IRON
CPR	COPPER
DI	DUCTILE IRON
MI	MALLEABLE IRON
WC	WROUGHT COPPER

MECHANICAL PIPE SUPPORT SCHEDULE, NOTE 1				
PIPE MATERIAL \ SCHEDULE OR TYPE \ SPECIFICATION	PIPE SIZE (IN)	MAX. HORIZONTAL SUPPORT SPACING (FT)	MIN. HORIZONTAL HANGER ROD SIZE DIAMETER (IN)	MAX. VERTICAL SUPPORT SPACING (FT)
CPR \ L \ ASTM B88 HARD DRAWN	0.50	4	3/8	10
CPR \ L \ ASTM B88 HARD DRAWN	0.75	5	3/8	10
CPR \ L \ ASTM B88 HARD DRAWN	1.00	6	3/8	10
CPR \ L \ ASTM B88 HARD DRAWN	1.25	6	3/8	10
CPR \ L \ ASTM B88 HARD DRAWN	1.50	9	3/8	10
CPR \ L \ ASTM B88 HARD DRAWN	2.00	10	3/8	10
CPR \ L \ ASTM B88 HARD DRAWN	2.50	10	1/2	10
BCS \ 40 \ ASTM A53 GRADE B TYPE S OR E	0.50	6	3/8	15
BCS \ 40 \ ASTM A53 GRADE B TYPE S OR E	0.75	7	3/8	15
BCS \ 40 \ ASTM A53 GRADE B TYPE S OR E	1.00	9	3/8	15
BCS \ 40 \ ASTM A53 GRADE B TYPE S OR E	1.25	11	3/8	15
BCS \ 40 \ ASTM A53 GRADE B TYPE S OR E	1.50	12	3/8	15
BCS \ 40 \ ASTM A53 GRADE B TYPE S OR E	2.00	12	3/8	15
BCS \ 40 \ ASTM A53 GRADE B TYPE S OR E	2.50	12	1/2	15
BCS \ 40 \ ASTM A53 GRADE B TYPE S OR E	4.00	12	5/8	15
BCS \ 40 \ ASTM A53 GRADE B TYPE S OR E	6.00	12	3/4	15
BCS \ 40 \ ASTM A53 GRADE B TYPE S OR E	8.00	12	7/8	15

NOTES:
1. PIPE SUPPORTS BASED ON STRAIGHT RUNS WITH NO VALVES. PROVIDE ADDITIONAL SUPPORTS AS REQUIRED.
2. ROD MATERIAL BASED ON STEEL ROLLED THREADS, S=9.5 KSI.

PIPE MATERIAL SCHEDULE	
BCS	BLACK CARBON STEEL
CPR	COPPER

MECHANICAL PIPING & EQUIPMENT INSULATION SCHEDULE												
PIPING SYSTEM, NOTE 1	LOCATION	PIPING TEMP. (°F)	INSULATION THICKNESS BASED ON PIPE DIAMETER (IN), NOTE 2						INSULATION MATERIAL, NOTE 3	K-FACTOR AT A 75°F MEAN TEMP. (BTU*IN/HR*ST*F)	JACKET TYPE	FITTING COVER TYPE
			RUNOUTS <2	<=1	1.0 - 1.25	1.5 - 3.5	4 - 6	>=8				
HOT WATER	INTERIOR	160 - 180	1.0	1.5	1.5	2.0	2.0	2.0	GLASS MINERAL WOOL	0.23	ASJ	PVC
HOT WATER EQUIPMENT	INTERIOR	160 - 180	2.0						3.0 PCF INORGANIC FIBERGLASS	0.23	ASJ	N/A
MAKE-UP WATER	INTERIOR	55	0.5	0.5	0.5	0.5	0.5	0.5	GLASS MINERAL WOOL	0.23	ASJ	PVC
DOMESTIC HOT WATER	INTERIOR	120	1.0	1.0	1.0	1.5	1.5	1.5	GLASS MINERAL WOOL	0.23	ASJ	PVC
DOMESTIC COLD WATER	INTERIOR	45	0.5	0.5	0.5	0.5	0.5	0.5	GLASS MINERAL WOOL	0.23	ASJ	PVC

1. SEE PIPING SCHEDULE FOR PIPING TYPES.
2. RUNOUTS ARE AREAS WERE PIPING IS RUN IN PARTITIONS WITHIN CONDITIONED SPACES.
3. INSULATION AND JACKET SHALL HAVE A MAXIMUM FLAME SPREAD OF 25 & SMOKE DEVELOPMENT OF 50 PER ASTM E 84.

EXPANSION TANK SCHEDULE		
DESIGNATION	ET-44	ET-49
SERVICE	HEATING SYSTEM	HEATING SYSTEM
DESCRIPTION	BLADDER TYPE EXPANSION TANK	BLADDER TYPE EXPANSION TANK
ACCEPTANCE (GAL)	79	57
TOTAL VOLUME (L)	79	57
MAX. WORKING PRESS. (PSIG)	125	125
MAX. WORKING TEMP (°F)	240	240
ASME CONSTRUCTION & STAMP	PROVIDE	PROVIDE
WEIGHT (LBS)	320	132
CONCRETE PAD	PROVIDE	PROVIDE

AIR SEPARATOR SCHEDULE		
DESIGNATION	AS-44	AS-49
SERVICE	HEATING SYSTEM	HEATING SYSTEM
DESCRIPTION	AIR AND DIRT SEPARATOR	AIR AND DIRT SEPARATOR
CONNECTION SIZE (IN)	3	2
FLOW RATE (GPM)	80	25
PRESSURE DROP (FT H20)	2	1
INTERNAL STRAINER	PROVIDE	PROVIDE
DRAIN VALVE	PROVIDE	PROVIDE
AUTOMATIC AIR VENT	PROVIDE	PROVIDE
MAX. WORKING PRESS. (PSIG)	125	125
MAX. WORKING TEMP (°F)	240	240
ASME CONSTRUCTION & STAMP	PROVIDE	PROVIDE

UNIT HEATER SCHEDULE			
DESIGNATION	UH-A6-1	UH-A6-2	UH-A6-3
LOCATION	BLDG A6	BLDG A6	BLDG A6
SERVICE	BLDG A6	BLDG A6	BLDG A6
DESCRIPTION	CONDESNING SEALED COMBUSTION UNIT HEATER	CONDESNING SEALED COMBUSTION UNIT HEATER	CONDESNING SEALED COMBUSTION UNIT HEATER
FAN TYPE	PROPELLER	PROPELLER	PROPELLER
AIR FLOW (CFM)	2661	2661	2661
FAN MOTOR RPM	1500	1500	1500
HEATING TYPE	NATURAL GAS	NATURAL GAS	NATURAL GAS
HEATING INPUT (MBH)	150	150	150
HEATING OUTPUT (MBH)	143	143	143
COMBUSTION EFFICIENCY (%)	95	95	95
VENT SIZE, DIA. (IN), NOTE 1	2	2	2
VENT MATERIAL, NOTE 1	SCHEDULE 40 CPVC (ASTM F441)	SCHEDULE 40 CPVC (ASTM F441)	SCHEDULE 40 CPVC (ASTM F441)
AIR INTAKE SIZE, DIA. (IN), NOTE 1	2	2	2
AIR INTAKE MATERIAL, NOTE 1	SCHEDULE 40 CPVC (ASTM F441)	SCHEDULE 40 CPVC (ASTM F441)	SCHEDULE 40 CPVC (ASTM F441)
CONDENSATE NUETRALIZER KIT	PROVIDE	PROVIDE	PROVIDE
ACCESSORIES	WALL MOUTED THERMOSTAT WITH LOCKING COVER	WALL MOUTED THERMOSTAT WITH LOCKING COVER	WALL MOUTED THERMOSTAT WITH LOCKING COVER
MOUNTING HEIGHT (FT)	15	15	15
LOCAL ELECTRICAL DISCONNECT	PROVIDE	PROVIDE	PROVIDE
ELECTRICAL (V/PH/HZ)	120/1/60	120/1/60	120/1/60
ELECTRICAL MCA (AMPS)	19.1	19.1	19.1
ELECTRICAL MOCP (AMPS)	25	25	25
WEIGHT (LBS)	209	209	209

NOTES:

1. ALL INTAKE AND VENT SYSTEM MATERIALS, SYSTEMS & MANUFACTURERS MUST BE COMPATIBLE AND LISTED TO BE USED WITH HEATER. INTAKE AND VENT SYSTEM DESIGN AND SIZING SHALL BE BASED ON MANUFACTURER'S INSTALLATION REQUIRMENTS.

SYM	DESCRIPTION	DATE	APPR

NAVFAC

AMES & WHITAKER Architects

BID SET SUBMISSION

12/30/19

DES KWK | DRW GJC | CHK KWK

<<PM/DM>> RC

BRANCH MANAGER XX

CHIEF ENG/ARCH XXX

<<XX>> XX

DEPARTMENT OF THE NAVY
NAVAL FACILITIES ENGINEERING COMMAND
NORTHEAST PT

NAVAL FACILITIES ENGINEERING COMMAND ~ MID-ATLANTIC
NAVAL STATION ~ NORFOLK, VIRGINIA

NAVAL STATION NEWPORT
NEWPORT, RI

DECENTRALIZE STEAM AT BOILER PLANT A6

MECHANICAL SCHEDULES

SCALE: AS NOTED

EPROJECT NO.: 1389839

CONSTR. CONTR. NO.

NAVFAC DRAWING NO.
12799488

SHEET 58 OF 65

NAVSTA DRAWING NO.
44547-412

M609

DRAWFORM REVISION: 10 MARCH 2009

GENERAL NOTES

1. PROJECT SCOPE: PROVIDE COMPLETE AND OPERATIONAL SYSTEMS AS OUTLINED IN THE CONTRACT DOCUMENTS INCLUDING ALL NECESSARY MATERIAL, LABOR, AND EQUIPMENT.
2. CONSTRUCTION\CONTRACT DOCUMENTS: CONTRACT DOCUMENTS INCLUDING PLANS, DETAILS, AND ONE–LINE DIAGRAMS SHOW THE GENERAL LOCATION AND ARRANGEMENT OF THE WORK. THESE DOCUMENTS ARE DIAGRAMMATIC AND DO NOT SHOW ALL CONNECTORS, FITTINGS, HANGERS, AND ADDITIONAL ELEMENTS WHICH THE CONTRACTOR MUST PROVIDE TO COMPLETE THE SYSTEMS AS OUTLINED IN THE CONTRACT DOCUMENTS. PLANS AND DETAILS DO NOT SHOW ALL INTERFERENCE'S AND CONDITIONS, VISIBLE AND/OR HIDDEN, THAT MAY EXIST, THUS REQUIRING THE CONTRACTOR TO INSPECT AND SURVEY THE PROJECT AREA BEFORE PERFORMING THE WORK. THE CONTRACTOR SHALL VERIFY ALL DIMENSIONS BY FIELD MEASUREMENTS.
3. COORDINATION:
   - A) THE CONTRACTOR SHALL COORDINATE THEIR WORK WITH ALL CONSTRUCTION DOCUMENTS AND OTHER TRADES ASSOCIATED WITH THE PROJECT.
   - B) THE CONTRACTOR SHALL VISIT THE SITE OF WORK AND FAMILIARIZE HIMSELF WITH ALL AVAILABLE INFORMATION CONCERNING THE NATURE OF THE INSTALLATION AND CONDITIONS.
   - C) BEFORE SELECTING MATERIAL, EQUIPMENT AND PROCEEDING WITH WORK, INSPECT AREAS WHERE MATERIAL AND EQUIPMENT ARE TO BE INSTALLED TO INSURE SUITABILITY, AND CHECK NEEDED SPACE FOR PLACEMENT, CLEARANCES AND INTERCONNECTIONS.
   - D) PLANS AND DETAILS DO NOT SHOW ALL INTERFERENCE'S AND CONDITIONS, VISIBLE AND/OR HIDDEN THAT MAY EXIST; THUS, REQUIRING THE CONTRACTOR TO INSPECT AND SURVEY THE SPACE BEFORE PERFORMING THE WORK.
   - E) BEFORE CUTTING OR DRILLING INTO BUILDING ELEMENTS INSPECT AND LAYOUT WORK TO AVOID DAMAGING STRUCTURAL ELEMENTS AND BUILDING UTILITIES.
   - F) ARRANGE FOR CHASES, SLOTS, AND OPENINGS IN OTHER BUILDING COMPONENTS DURING PROGRESS OF CONSTRUCTION, TO ALLOW FOR PROPER SYSTEM INSTALLATIONS.
   - G) COORDINATE THE INSTALLATION OF REQUIRED SUPPORTING DEVICES AND SLEEVES TO BE SET IN POURED IN PLACE CONCRETE AND OTHER STRUCTURAL COMPONENTS, AS THEY ARE CONSTRUCTED.
   - H) SEQUENCE, COORDINATE, AND INTEGRATE INSTALLATIONS OF MATERIALS AND EQUIPMENT FOR EFFICIENT FLOW OF THE WORK. GIVE PARTICULAR ATTENTION TO LARGE EQUIPMENT REQUIRING POSITIONING PRIOR TO CLOSING IN THE BUILDING.
   - I) FAILURE OF THE CONTRACTOR TO ACQUAINT HIMSELF WITH ALL AVAILABLE INFORMATION CONCERNING THE ABOVE CONDITIONS AND NOT PERFORMING PROPER COORDINATION WILL NOT RELIEVE THE CONTRACTOR FROM THE RESPONSIBILITY FOR ESTIMATING THE DIFFICULTIES AND COSTS FOR SUCCESSFULLY PERFORMING THE COMPLETE WORK UNDER THIS PROJECT.
4. SHUTDOWNS: WRITTEN REQUESTS FOR APPROVAL FOR PLANNED SHUTDOWNS OR INTERRUPTION OF OWNER'S UTILITIES, SYSTEMS AND EQUIPMENT SHALL BE MADE 15 DAYS PRIOR TO THE START OF THE REQUESTED SHUTDOWN PERIODS.
5. CODES AND STANDARDS: THE CONTRACTOR SHALL FOLLOW ALL FEDERAL, STATE AND LOCAL CODES THAT HAVE JURISDICTION WHERE THE WORK IS BEING PERFORMED. THROUGHOUT THE CONTRACT DOCUMENTS CERTAIN CODES AND STANDARDS ARE REFERENCED. THE CONTRACTOR SHALL USE THE LATEST VERSIONS OF CODES AND STANDARDS REFERENCED UNLESS OTHERWISE NOTED. IF THE CONTRACTOR IS NOT FAMILIAR WITH THE REFERENCED STANDARD THEY SHALL CONTACT THE OWNER'S REPRESENTATIVE FOR DIRECTION.
6. WORKMAN: ALL WORK SHALL BE DONE WITH LICENSED WORKMEN IN ACCORDANCE WITH FEDERAL, STATE AND LOCAL GOVERNING AUTHORITIES CODES AND REGULATIONS.
7. SUBMITTALS: THE CONTRACTOR SHALL PROVIDE SUBMITTALS FOR ALL EQUIPMENT AND MATERIALS BEING PROVIDED BEFORE SUCH EQUIPMENT AND MATERIALS ARE PURCHASED AND INSTALLED. THE SUBMITTALS SHALL BE REVIEWED AND RETURNED BY THE OWNER'S REPRESENTATIVE WITH APPROPRIATE COMMENTS. SUBMITTALS SHALL BE SUBMITTED ELECTRONICALLY IN PDF FORMAT AND WILL BE RETURNED WITH COMMENTS TO THE CONTRACTOR IN PDF FORMAT.
8. AS–BUILT DOCUMENTATION: THE CONTRACTOR SHALL PROVIDE ONE MARK–UP SET OF CONSTRUCTION DOCUMENTS SHOWING FINAL AS–BUILT CONDITIONS. DOCUMENTS SHALL CLEARLY SHOW THE CHANGES MADE TO THE INSTALLED SYSTEMS.
9. EQUIPMENT WARRANTIES, MAINTENANCE MANUALS AND INSTALLATION MANUALS: TURN OVER TO THE OWNER ALL MANUFACTURERS' WARRANTIES, MAINTENANCE MANUALS, AND INSTALLATION MANUALS FOR EQUIPMENT AND MATERIALS PROVIDED.
10. PHOTOGRAPHS: PHOTOGRAPHS ARE PROVIDED TO SHOW CURRENT CONDITION OF BUILDING SYSTEMS TO ASSIST THE CONTRACTOR. PHOTOGRAPHS DO NOT SHOW ALL AREAS OF THE BUILDING OR ALL SYSTEM CONDITIONS, THUS REQUIRING THE CONTRACTOR TO VISIT THE SITE BEFORE PERFORMING WORK. PHOTOGRAPHS ARE NOT INTENDED TO SHOW SCOPE OF WORK. PLANS, NOTES, SPECIFICATIONS AND OTHER BID DOCUMENTS INDICATE SCOPE OF WORK.
11. TERMINOLOGY:
   - A) THE TERM "INDICATED" SHALL MEAN, "AS SHOWN ON CONTRACT DOCUMENTS (SPECIFICATIONS, DRAWINGS, AND RELATED ATTACHMENTS)".
   - B) THE TERM "PROVIDE" SHALL MEAN, "TO FURNISH, INSTALL, AND CONNECT COMPLETELY".
   - C) THE TERM "COORDINATE" SHALL MEAN ONE OR MORE OF THE FOLLOWING: "TO MANAGE, INTERFACE, COMMUNICATE, MAKE ARRANGEMENT, BRING INTO ORDER, ADMINISTER AND HANDLE COMPLETELY".
   - D) THE TERM "INTERIOR" IS AN INTERIOR LOCATION WHERE ITS ENVIRONMENT IS HEATED AND/OR AIR CONDITIONED AND NOT SUBJECT TO OUTSIDE WEATHER CONDITIONS.
   - E) THE TERM "EXTERIOR" IS ALL LOCATIONS, WHICH ARE NOT INTERIOR, OR UNDERGROUND.
   - F) THE TERM "INTERIOR FINISHED SPACE" IS INTERIOR SPACES, WHICH ARE USED FOR OFFICES, CORRIDORS, LOBBIES, TOILETS, STORAGE AND FILING ROOMS, LOUNGES, MECHANICAL ROOMS, ELECTRICAL ROOMS, ETC.
13. DEMOLITION: DEMOLITION OF INDICATED ITEMS INCLUDES THE REMOVAL AND PROPER DISPOSAL OF THOSE ITEMS AND ALL ASSOCIATED PIPING, DUCTWORK, WIRING AND HANGERS. ELECTRICAL BRANCH, CONTROL, TELEPHONE, AND ALARM WIRING SHALL BE REMOVED BACK TO PANELBOARDS OR RELATED SYSTEM PANELS OR BACKBOARDS.
14. EQUIPMENT AND MATERIAL INSTALLATIONS:
   - A) ALL EQUIPMENT AND MATERIALS SHALL BE LABELED AND LISTED, AND INSTALLED IN ACCORDANCE WITH THEIR LISTING AND MANUFACTURER'S REQUIREMENTS.
   - B) WHEN A MANUFACTURER RECOMMENDS AN OPTION OR ACCESSORY ITEM FOR THE INSTALLED CONDITION, OPERATION, OR ENVIRONMENT THAT IS TO BE EXPERIENCED, SUCH ITEM SHALL BE SUPPLIED AT NO ADDITIONAL COST TO THE OWNER.
   - C) IF AN EQUIPMENT MANUFACTURER REQUIRES LARGER CAPACITY, CIRCUITRY AND/OR EQUIPMENT, THE CONTRACTOR SHALL PROVIDE SUCH CAPACITY AND/OR EQUIPMENT UNDER HIS CONTRACT AT NO ADDITIONAL COST TO THE OWNER.
   - D) LOCATE ALL EQUIPMENT, WHICH REQUIRES SERVICING IN FULLY ACCESSIBLE POSITIONS. IF REQUIRED FOR BETTER ACCESSIBILITY, FURNISH ACCESS DOORS FOR THAT PURPOSE.
   - E) MINOR DEVIATIONS FROM DRAWINGS MAY BE MADE TO ALLOW FOR BETTER ACCESSIBILITY.
   - F) ALL WORK IN INTERIOR FINISHED SPACES SHALL BE CONCEALED BEHIND WALLS, ABOVE CEILINGS OR HUNG CEILINGS, OR UNDER THE FLOOR. PROVIDE ALL NECESSARY CUTTING, PATCHING, REPAINTING AND/OR REPLACEMENT OF CEILING TILES AS REQUIRED TO PERFORM WORK.
   - G) INSTALL SYSTEMS, MATERIALS, AND EQUIPMENT TO CONFORM WITH APPROVED SUBMITTAL DATA, INCLUDING COORDINATION DRAWINGS (IF REQUIRED), TO GREATEST EXTENT POSSIBLE. CONFORM TO ARRANGEMENTS INDICATED BY THE CONTRACT DOCUMENTS, RECOGNIZING THAT PORTIONS OF THE WORK ARE SHOWN ONLY IN DIAGRAMMATIC FORM. WHERE COORDINATION REQUIREMENTS CONFLICT WITH INDIVIDUAL SYSTEM REQUIREMENTS, REFER CONFLICT TO THE ARCHITECT/ENGINEER.
   - H) INSTALL SYSTEMS, MATERIALS, AND EQUIPMENT LEVEL AND PLUMB, PARALLEL AND PERPENDICULAR TO OTHER BUILDING SYSTEMS AND COMPONENTS, WHERE INSTALLED EXPOSED IN FINISHED SPACES
   - I) INSTALL EQUIPMENT TO FACILITATE SERVICING, MAINTENANCE, AND REPAIR OR REPLACEMENT OF EQUIPMENT COMPONENTS. AS MUCH AS PRACTICAL, CONNECT EQUIPMENT FOR EASE OF DISCONNECTING, WITH MINIMUM OF INTERFERENCE WITH OTHER INSTALLATIONS.
   - J) INSTALL SYSTEMS, MATERIALS, AND EQUIPMENT GIVING RIGHT OF WAY PRIORITY TO SYSTEMS REQUIRED TO BE INSTALLED AT A SPECIFIED SLOPE.
   - K) WHERE MOUNTING HEIGHTS ARE NOT DETAILED OR DIMENSIONED, INSTALL SYSTEMS, MATERIALS, AND EQUIPMENT TO PROVIDE THE MAXIMUM HEADROOM POSSIBLE.
   - L) ASCERTAIN FROM EXAMINATION OF THE DRAWINGS, ANY SPECIAL TEMPORARY OPENINGS IN THE BUILDING REQUIRED FOR THE ADMISSION OF APPARATUS PROVIDED UNDER THIS DIVISION. NOTIFY THE CONTRACTOR WITH SUFFICIENT NOTICE TO PROVIDE THESE OPENINGS. IN THE EVENT OF FAILURE TO GIVE SUFFICIENT NOTICE, THE CONTRACTOR SHALL ASSUME ALL COSTS OF PROVIDING SUCH OPENINGS THEREAFTER. THE CONTRACTOR SHALL BE RESPONSIBLE FOR ALL DISASSEMBLY AND ASSEMBLY OF EQUIPMENT AS REQUIRED TO PLACE EQUIPMENT IN THEIR FINAL LOCATIONS.
   - M) BEFORE TRENCHING OR DIGGING, CONTACT THE UTILITY COMPANIES BY CALLING THE "CALL BEFORE YOU DIG" SERVICE AT 1–800–922–4455 FOR CONNECTICUT OR "DIG SAFE" AT 1–800–322–4844 FOR MASSACHUSETTS FOR INFORMATION REGARDING THE LOCATION OF UNDERGROUND UTILITIES. DO NOT RELY ON CONTRACT SITE AND BUILDING DRAWINGS FOR UTILITY INFORMATION AS THEY ARE SCHEMATIC IN NATURE AND DO NOT SHOW EXACT INFORMATION OR ALL UTILITY LINES THAT MAY BE PRESENT.
15. FIRE RATINGS: THE CONTRACTOR SHALL REVIEW ALL CONTRACT DOCUMENTS FOR FIRE SEPARATION AND FIRE RATED ASSEMBLIES. ALL PIPING, DUCTWORK AND CONDUITS PASSING THROUGH OR PENETRATING WALLS, CEILINGS AND FLOORS SHALL BE PROVIDED WITH A UL LISTED FIRE STOPPING ASSEMBLIES. UL LISTED FIRE STOPPING ASSEMBLIES SHALL BE SUITABLE FOR THE CONDITIONS ENCOUNTERED AND SHALL BE RATED EQUAL TO THE RATING OF THE WALL, CEILING OR FLOOR. REVIEW FIRE RATED ASSEMBLIES THAT ALLOW PENETRATIONS OF ITEMS SUCH AS OUTLET BOXES AND CONDUITS THAT DO NOT REQUIRE FIRE STOPPING. SPACE AND POSITION THESE DEVICES AS ALLOWED PER THE ASSEMBLY'S UL RATING.
16. SERVICE LABELING: LABEL EQUIPMENT, PIPING, CONDUITS, INCLUDING FANS, AIR HANDLERS, TERMINAL UNITS, PANELBOARDS, ETC. WITH LABELS MADE OF SELF–STICKING, PLASTIC FILM DESIGNED FOR PERMANENT INSTALLATION. LABELS SHALL MATCH DESIGNATIONS AS INDICATED ON CONTRACT DRAWINGS. IDENTIFY PIPING AND CONDUITS IN ACCORDANCE WITH OSHA 29 CFR 1910.144, EXCEPT THAT LABELS OR TAPES MAY BE USED IN LIEU OF PAINTING OR STENCILING. SPACING OF IDENTIFICATION MARKING ON RUNS SHALL NOT EXCEED 50 FEET. MATERIALS FOR LABELS AND TAPES SHALL CONFORM TO CID A–A–1689, AND SHALL BE GENERAL PURPOSE TYPE AND COLOR CLASS.
   - A) IN ADDITION IDENTIFY SERVICES AS INDICATED BELOW:
   - B) EACH POINT OF ENTRY AND EXIT OF PIPE OR CONDUITS PASSING THROUGH WALLS.
   - C) EACH CHANGE IN DIRECTION, I.E., ELBOWS, TEES.
   - D) IN CONGESTED OR HIDDEN AREAS AND AT ALL ACCESS PANELS AT EACH POINT REQUIRED TO CLARIFY SERVICE OR INDICATED HAZARD.
   - E) IN LONG STRAIGHT RUNS, LOCATE LABELS AT DISTANCES WITHIN EYESIGHT OF EACH OTHER NOT TO EXCEED 50 FEET. ALL LABELS SHALL BE VISIBLE AND LEGIBLE FROM THE PRIMARY SERVICE AND OPERATING AREA.
17. MANUFACTURER'S NAMEPLATES: EACH ITEM OF EQUIPMENT SHALL HAVE A NAMEPLATE BEARING THE MANUFACTURER'S NAME, ADDRESS, MODEL NUMBER, AND SERIAL NUMBER SECURELY AFFIXED IN A CONSPICUOUS PLACE; THE NAMEPLATE OF THE DISTRIBUTING AGENT WILL NOT BE ACCEPTABLE.
18. POSTED OPERATING INSTRUCTIONS: PROVIDE FOR EACH SYSTEM AND PRINCIPAL ITEM OF EQUIPMENT AS SPECIFIED FOR USE BY OPERATION AND MAINTENANCE PERSONNEL. PRINT OR ENGRAVE OPERATING INSTRUCTIONS AND FRAME UNDER GLASS OR IN APPROVED LAMINATED PLASTIC. POST INSTRUCTIONS WHERE DIRECTED. FOR OPERATING INSTRUCTIONS EXPOSED TO THE WEATHER, PROVIDE WEATHER–RESISTANT MATERIALS OR WEATHERPROOF ENCLOSURES. OPERATING INSTRUCTIONS SHALL NOT FADE WHEN EXPOSED TO SUNLIGHT AND SHALL BE SECURED TO PREVENT EASY REMOVAL OR PEELING. THE OPERATING INSTRUCTIONS SHALL INCLUDE THE FOLLOWING:
   - A) WIRING DIAGRAMS, CONTROL DIAGRAMS, AND CONTROL SEQUENCE FOR EACH PRINCIPAL SYSTEM AND ITEM OF EQUIPMENT.
   - B) START UP, PROPER ADJUSTMENT, OPERATING, LUBRICATION, AND SHUTDOWN PROCEDURES.
   - C) SAFETY PRECAUTIONS.
   - D) THE PROCEDURE IN THE EVENT OF EQUIPMENT FAILURE.
   - E) OTHER ITEMS OF INSTRUCTION AS RECOMMENDED BY THE MANUFACTURER OF EACH SYSTEM OR ITEM OF EQUIPMENT.
19. WARNING SIGNS: PROVIDE WARNING SIGNS FOR THE ENCLOSURES OF ELECTRICAL EQUIPMENT INCLUDING SUBSTATIONS, PAD–MOUNTED TRANSFORMERS, PAD–MOUNTED SWITCHES, GENERATORS, AND SWITCHGEAR HAVING A NOMINAL RATING EXCEEDING 600 VOLTS.
20. EXTERIOR FERROUS MATERIALS: ALL EXTERIOR FERROUS MATERIALS SHALL BE PROTECTED FROM CORROSION BY ONE OF THE FOLLOWING METHODS:
   - A) COVERED WITH A NON–FERROUS OR NON–CORRODING MATERIAL.
   - B) MATERIALS THAT ARE INSULATED ON THE EXTERIOR.
   - C) MATERIALS THAT ARE GALVANIZED.
   - D) MATERIALS THAT ARE PAINTED. EXTERIOR PAINTING SHALL CONSIST OF A BASE COAT OF AN APPROPRIATE PRIMER AND TWO COATS OF FINAL PAINT. FINAL PAINT COLOR SHALL BE SELECTED BY THE OWNER'S REPRESENTATIVE.

SYM	DESCRIPTION	DATE	APPR

NAVFAC

AMES & WHITAKER Architects

BID SET SUBMISSION

12/30/19

DES ERK	DRW GJG CHK ERK
<<PM/DM>>	RC
BRANCH MANAGER	XX
CHIEF ENG/ARCH	XXX
<<XXX>>	XX

DEPARTMENT OF THE NAVY
NAVAL FACILITIES ENGINEERING COMMAND
NORTHEAST PT.

NAVAL FACILITIES ENGINEERING COMMAND – MID-ATLANTIC
NAVAL STATION – NORFOLK, VIRGINIA

NAVAL STATION NEWPORT
NEWPORT, RI

DECENTRALIZE STEAM AT BOILER PLANT A6

ELECTRICAL NOTES

SCALE: AS NOTED
EPROJECT NO.: 13898.39
CONSTR. CONTR. NO.
NAVFAC DRAWING NO. 12799489
SHEET 59 OF 65

E001

NAVSTA DRAWING NO. 44548–412

DRAWFORM REVISION: 10 MARCH 2009

ABBREVIATIONS

% – PERCENT
(TYP.) – TYPICAL FOR OTHER LOCATIONS
Ø or DIA – DIAMETER
° or DEG – DEGREE
' – FEET
" – INCHES
A – AMPERES
ABV – ABOVE
AC – ALTERNATING CURRENT
ACLC – AIR–COOLED LIQUID CHILLER
AFF – ABOVE FINISHED FLOOR
AHU – AIR HANDLING UNIT
AMP – AMPERE
AS – AIR SEPARATOR
ATM – ATMOSPHERE
ATS – AUTOMATIC TRANSFER SWITCH
AWG – AMERICAN WIRE GAUGE
BKBD – BACKBOARD
BLW – BELOW
BTU – BRITISH THERMAL UNIT
C – CONDUIT RACEWWAY
CTV – CLOSED CIRCUIT TELEVISION
CFM – CUBIC FEET PER MINUTE
CH – CABINET HEATER
CI – CAST IRON
CKT – CIRCUIT
CLG – CEILING
DB – DECIBEL
DC – DIRECT CURRENT
DF – DRINKING FOUNTAIN
DN – DOWN
DWG – DRAWING
EXG – EXISTING
EAT – ENTERING AIR TEMPERATURE
EF – EXHAUST FAN
EGC – EQUIPMENT GROUNDING CONDUCTOR
EL – ELEVATION
EMT – ELECTRICAL METALLIC TUBING
ENT – ENTERING
EQPMT – EQUIPMENT
EWH – ELECTRIC WATER HEATER
EXG – EXISTING
F – FAHRENHEIT
FA – FIRE ALARM
FAAP – FIRE ALARM ANNUNCIATION PANEL
FACP – FIRE ALARM CONTROL PANEL
FC – FAN COIL
FLR – FLOOR
FMP – FIRE MANUAL PULL STATION
FP – FIRE PROTECTION
FS – FLOW SWITCH
FT – FEET
FU – FUSED
GAL – GALLON(S)
GEC – GROUNDING ELECTRODE CONDUCTOR
GFCI – GROUND FAULT CIRCUIT INTERRUPTER
HGT – HEIGHT
HOA – HAND OFF AUTO
HOR – HORIZONTAL
HP – HORSEPOWER
HR – HOUR(S)
HRU – HEAT RECOVERY UNIT
HX – HEAT EXCHANGER
HZ – HERTZ FREQUENCY
ID – INSIDE DIAMETER
IEGC – INSULATED EQUIP. GROUNDING CONDUCTOR
IMC – INTERMEDIATE METAL CONDUIT
IPS – IRON PIPE SIZE
K – THERMAL CONDUCTIVITY
KA.I.C. – KILO–AMPERES INTERRUPTING CURRENT
KVA – KILO VOLT–AMPERES
KW – KILOWATT(S)
KWH – KILOWATT HOUR
KWH – KILOWATT HOUR
LBS – POUNDS
LTG – LIGHTING
MAX – MAXIMUM
MCCB – MOLDED CASE CIRCUIT BREAKER
MDP – MAIN DISTRIBUTION PANEL
MIN – MINIMUM
MLO – MAIN LUG ONLY
MOCP – MAXIMUM OVERCURRENT PROTECTION
N/A – NOT APPLICABLE
NC – NOISE CRITERIA
NC – NORMALLY CLOSED
NEC – NATIONAL ELECTRIC CODE
NF – NON–FUSED
NO – NORMALLY OPEN
NO – NUMBER
NTS – NOT TO SCALE
OA – OUTSIDE AIR
OZ – OUNCE
P – POLE
PA – PRE ACTION PIPING
PAA – PUBLIC ADDRESS AMPLIFIER
PD – PRESSURE DROP OR DIFFERENCE
PH – PHASE
PIV – POST INDICATING VALVE
PSI – POUNDS PER SQUARE INCH
PSIA – PSI ABSOLUTE
PSIG – PSI GAUGE
PWR – POWER
QTY – QUANTITY
RA – RETURN AIR
RECPT – RECEPTACLE
RH – RELATIVE HUMIDITY
RM – ROOM
RPDA – REDUCE PRESSURE PRINCIPLE
RPM – REVOLUTIONS PER MINUTE
RSC – RIGID STEEL CONDUIT
RTU – ROOF TOP UNIT
SA – SUPPLY AIR
SEC – SECOND
SF – SAFETY FACTOR
SF – SQUARE FEET
SHR – SHOWER
SL – REFRIGERANT SUCTION
SP – SPRINKLER PIPE
SP – STATIC PRESSURE
SPEC – SPECIFICATIONS
SPLY – SUPPLY
STD – STANDARD
SUCT – SUCTION
SWBD – SWITCHBOARD
TEMP – TEMPERATURE
T–STAT – THERMOSTAT
TX – TRANSFORMER #1
TYP – TYPICAL
U – HEAT TRANSFER COEFFICIENT
UH – UNIT HEATER
UR – URINAL
V – VOLT
VA – VOLT AMPERE
VAC – VOLTS–ALTERNATING CURRENT
VAV – VARIABLE AIR VOLUME
VEL – VELOCITY
VENT – VENTILATION
VERT – VERTICAL
VH – VENT HOOD
VL – REFRIGERANT VAPORCINE
VOL – VOLUME
VTR – VENT THRU ROOF
W – WATT(S)
WC – WATER CLOSET
WCO – WALL CLEANOUT
WP – WEATHERPROOF

GENERAL SYMBOLS

A / A8 — PLAN TITLES
SCALE: 1/8" = 1'–0" (0, 4', 8', 16')

A / A8 — PHOTO MARKER ARROW INDICATES DIRECTION OF VIEW

NORTH ARROW

POINT OF CONNECTION

A — — — A — MATCH LINE

ITEMS TO BE DEMOLISHED

GENERAL POWER SYMBOLS

DISCONNECT – NON FUSED
DISCONNECT – FUSED
STARTER
COMBINATION STARTER & DISCONNECT
MOTOR
MOTOR WITH DISCONNECT (NF)
MOTOR WITH DISCONNECT (F)
MOTOR WITH COMBINATION STARTER & DISCONNECT
EQUIPMENT CONNECTION
EQUIPMENT CONNECTION WITH DISCONNECT (NF)
EQUIPMENT CONNECTION WITH DISCONNECT (F)
EQUIPMENT CONNECTION WITH COMBINATION STARTER AND DISCONNECT
SWITCH MOTOR RATED
JUNCTION BOX SQUARE
JUNCTION BOX ROUND

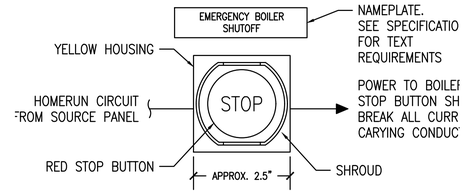

1 / E002 — EMERGENCY STOP BUTTON DETAIL
NO SCALE

NAVSTA DRAWING NO. 44549–412

SYM	DESCRIPTION	DATE	APPR

NAVFAC

AMES & WHITAKER Architects

BID SET SUBMISSION
12/30/19

DES ERK	DRW GJG	CHK ERK
<<PM/DM>>	RC	
BRANCH MANAGER	XX	
CHIEF ENG/ARCH	XXX	
<<XXX>>	XX	

DEPARTMENT OF THE NAVY
NAVAL FACILITIES ENGINEERING COMMAND
NORTHEAST PT.
NAVAL FACILITIES ENGINEERING COMMAND ~ MID-ATLANTIC
NAVAL STATION – NORFOLK, VIRGINIA
NAVAL STATION NEWPORT
NEWPORT, RI
DECENTRALIZE STEAM AT BOILER PLANT A6
ELECTRICAL SYMBOLS & ABBREVIATIONS

SCALE: AS NOTED
EPROJECT NO.: 1389839
CONSTR. CONTR. NO.
NAVFAC DRAWING NO. 12799490
SHEET 60 OF 65
E002

DRAWFORM REVISION: 10 MARCH 2009

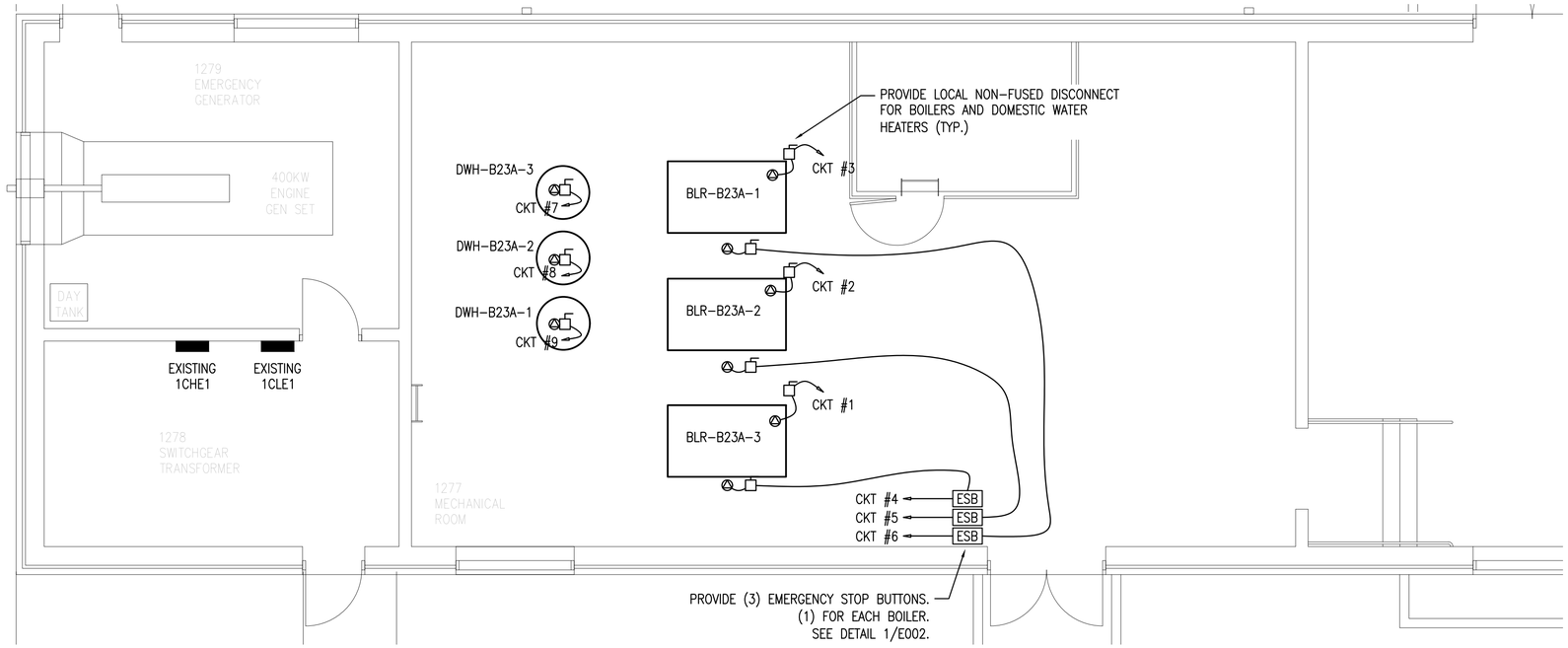

1
E100

BUILDING 23A
PARTIAL FLOOR PLAN

SCALE: 1/4" = 1'-0" 0 2' 4' 8'

FEEDER AND BRANCH CIRCUITS TO ADD SCHEDULE

	CIRCUIT AND LOAD INFORMATION			BREAKER			FEEDER / BRANCH SIZE	FEED FROM	
Ckt. No.	Circuit Designation	Voltage VAC	# of Phases	Num. Pole	Trip Amps	Frame Amps	Wire Qty and Size (min.)	Source Panel	Work and Coments
1	BLR-B23A-1	208	1	2	20	100	3/4" EMT, (3) #12 & (1) #12 EGC,	1CLE1	PROVIDE HOME RUN TO SOURCE PNL INDICATED. PROVIDE BREAKER IN SOURCE PNL
2	BLR-B23A-2	208	1	2	20	100	3/4" EMT, (3) #12 & (1) #12 EGC,	1CLE1	PROVIDE HOME RUN TO SOURCE PNL INDICATED. PROVIDE BREAKER IN SOURCE PNL
3	BLR-B23A-3	208	1	2	20	100	3/4" EMT, (3) #12 & (1) #12 EGC,	1CLE1	PROVIDE HOME RUN TO SOURCE PNL INDICATED. PROVIDE BREAKER IN SOURCE PNL
4	PUMP-B23A-1	480	3	3	20	100	3/4" EMT, (4) #12 & (1) #12 EGC,	1CHE1	PROVIDE HOME RUN TO SOURCE PNL INDICATED. PROVIDE BREAKER IN SOURCE PNL
5	PUMP-B23A-2	480	3	3	20	100	3/4" EMT, (4) #12 & (1) #12 EGC,	1CHE1	PROVIDE HOME RUN TO SOURCE PNL INDICATED. PROVIDE BREAKER IN SOURCE PNL
6	PUMP-B23A-3	480	3	3	20	100	3/4" EMT, (4) #12 & (1) #12 EGC,	1CHE1	PROVIDE HOME RUN TO SOURCE PNL INDICATED. PROVIDE BREAKER IN SOURCE PNL
7	DWH-B23A-1	120	1	1	20	100	3/4" EMT, (2) #12 & (1) #12 EGC,	1CLE1	PROVIDE HOME RUN TO SOURCE PNL INDICATED. PROVIDE BREAKER IN SOURCE PNL
8	DWH-B23A-2	120	1	1	20	100	3/4" EMT, (2) #12 & (1) #12 EGC,	1CLE1	PROVIDE HOME RUN TO SOURCE PNL INDICATED. PROVIDE BREAKER IN SOURCE PNL
9	DWH-B23A-3	120	1	1	20	100	3/4" EMT, (2) #12 & (1) #12 EGC,	1CLE1	PROVIDE HOME RUN TO SOURCE PNL INDICATED. PROVIDE BREAKER IN SOURCE PNL

BUILDING 23A

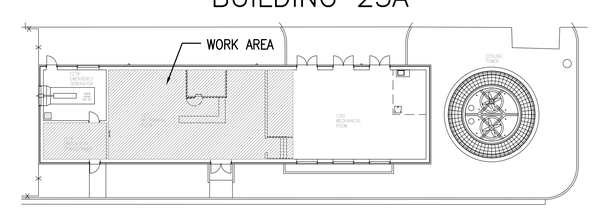

KEY PLAN

NAVSTA DRAWING NO.
44550-412

SYM	DESCRIPTION	DATE	APPR

NAVFAC

AMES & WHITAKER Architects

BID SET SUBMISSION

12/30/19

DES KWK	DRW GJC	CHK KWK	
<<PM/DM>>	RC		
BRANCH MANAGER	XX		
CHIEF ENG/ARCH	XXX		
<<XXX>>	XX		

DEPARTMENT OF THE NAVY
NAVAL FACILITIES ENGINEERING COMMAND
NORTHEAST PT.
NAVAL FACILITIES ENGINEERING COMMAND ~ MID-ATLANTIC
NAVAL STATION ~ NORFOLK, VIRGINIA
NAVAL STATION NEWPORT
NEWPORT, RI

DECENTRALIZE STEAM AT BOILER PLANT A6

B23A ELECTRICAL PLAN

SCALE: AS NOTED
EPROJECT NO.: 1389839
CONSTR. CONTR. NO.

NAVFAC DRAWING NO.
12799491

SHEET 61 OF 65

E100

DRAWFORM REVISION: 10 MARCH 2009

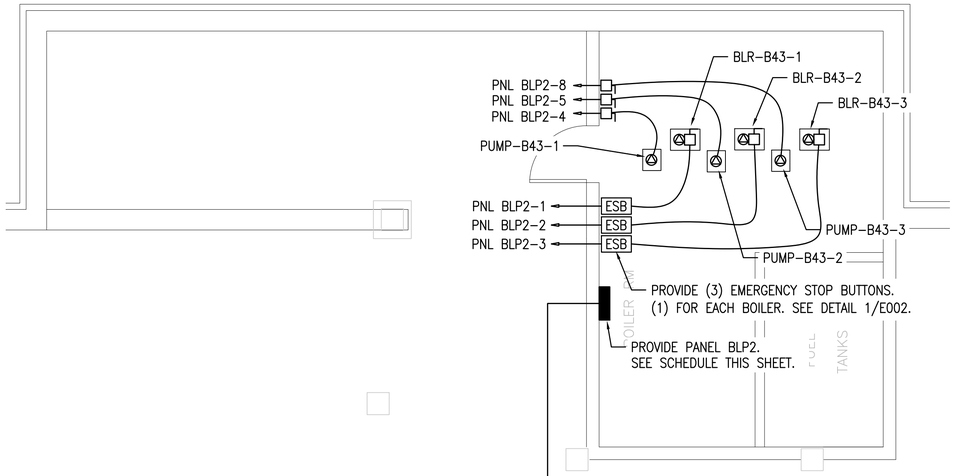

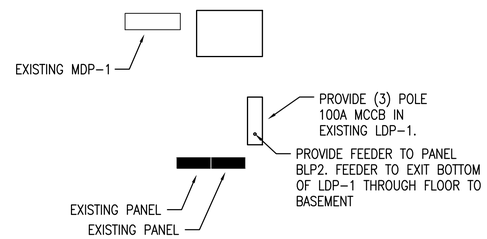

BUILDING 43
PARTIAL FIRST FLOOR PLAN

2 / E101

SCALE: 1/4" = 1'-0" (0, 2', 4', 8')

PANELBOARD BLP2	Class: LIGHTING Type: G.E. TYPE AQ					Circuit Short Rating (Min.): 22 KA.I.C. Remark:
SERVICE	208Y/120 Volts, 3 Phase, 4 Wire					S/E Label: NO
PANELBOARD CONFIGURATION	100 AMPERE MAIN BUS Trim: SURFACE					Entrance: TOP Equipment Ground Bus: YES
MAIN	Type: MLO Wire Size: #6-#1 KCMIL NUMBER PER PHASE: 1 Wire Material: CU					
BRANCH CIRCUITS	Branch Protective Devices: MOLDED CASE CIRCUIT BREAKERS, BOLT-ON TYPE					
Ckt. No.	Circuit Designation	KVA Load	Num. Pole	Trip Amps	Frame Amps	Wire (min.), PANEL SCHED NOTE #
1	BLR-B43-1		1	20	100	3/4" EMT, (2) #12 & (1) #12 EGC,
2	BLR-B43-2		1	20	100	3/4" EMT, (2) #12 & (1) #12 EGC,
3	BLR-B43-3		1	20	100	3/4" EMT, (2) #12 & (1) #12 EGC,
4	PUMP-B43-1		2	20	100	3/4" EMT, (3) #12 & (1) #12 EGC,
5	PUMP-B43-2		2	20	100	3/4" EMT, (3) #12 & (1) #12 EGC,
6	---		-	-	-	
7	---		-	-	-	
8	PUMP-B43-3		2	20	100	3/4" EMT, (3) #12 & (1) #12 EGC,
9	SPACE					
10	---		-	-	-	
11	SPACE					
12	SPACE					

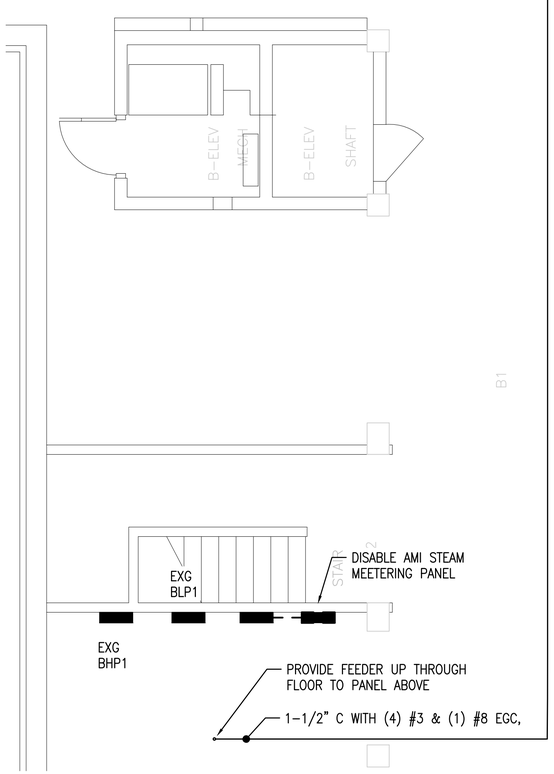

BUILDING 43
PARTIAL BASEMENT FLOOR PLAN

1 / E101

SCALE: 1/4" = 1'-0" (0, 2', 4', 8')

BUILDING 43

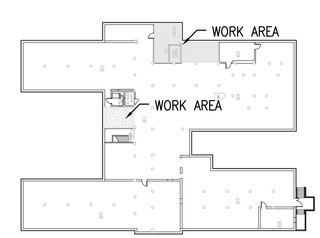

KEY PLAN

NAVSTA DRAWING NO. 44551-412

APPR	
DATE	
DESCRIPTION	
SYM	

NAVFAC

SEAL

AMES & WHITAKER Architects

A/E INFO

APPROVED

FOR COMMANDER NAVFAC

ACTIVITY

BID SET SUBMISSION

SATISFACTORY TO DATE 12/30/19

DES KWK DRW GJC CHK KWK

<<PM/EM>> RC

BRANCH MANAGER XX

CHIEF ENG/ARCH XXX

<<XXX>> XX

DEPARTMENT OF THE NAVY
NAVAL FACILITIES ENGINEERING COMMAND
NORTHEAST IPT
NAVAL FACILITIES ENGINEERING COMMAND ~ MID-ATLANTIC
NAVAL STATION – NORFOLK, VIRGINIA
NAVAL STATION NEWPORT
NEWPORT, RI

DECENTRALIZE STEAM AT BOILER PLANT A6

B43 ELECTRICAL PLAN

SCALE: AS NOTED

EPROJECT NO.: 1389839

CONSTR. CONTR. NO.

NAVFAC DRAWING NO. 12799492

SHEET 62 OF 65

E101

DRAWFORM REVISION: 10 MARCH 2009

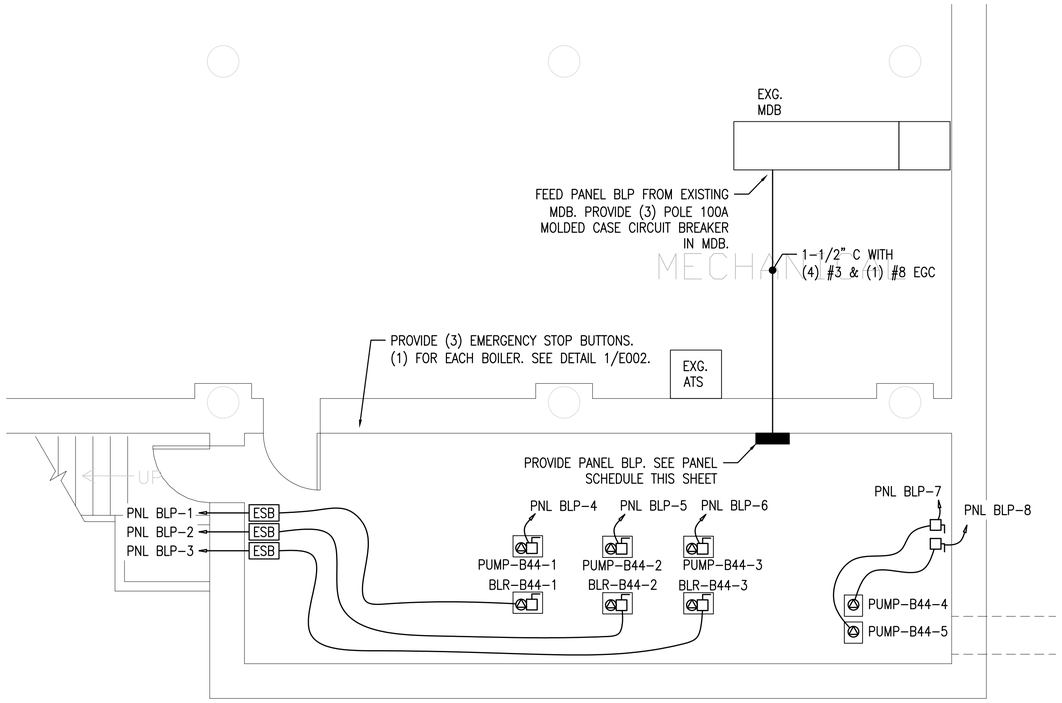

1 E102 BUILDING 44 PARTIAL FLOOR PLAN

SCALE: 1/4" = 1'-0" 0 2' 4' 8'

PANELBOARD BLP	Class: LIGHTING Type: G.E. TYPE AQ	Circuit Short Rating (Min.): 22 KA.I.C. Remark:
SERVICE	208Y/120 Volts, 3 Phase, 4 Wire	S/E Label: NO
PANELBOARD CONFIGURATION	100 AMPERE MAIN BUS Trim: SURFACE	Entrance: TOP Equipment Ground Bus: YES
MAIN	Type: MLO Wire Size: #6-#1 KCMIL NUMBER PER PHASE: 1 Wire Material: CU	
BRANCH CIRCUITS	Branch Protective Devices: MOLDED CASE CIRCUIT BREAKERS, BOLT-ON TYPE	

Ckt. No.	Circuit Designation	KVA Load	Num. Pole	Trip Amps	Frame Amps	Wire (min.), PANEL SCHED NOTE #
1	BLR-B44-1		1	20	100	3/4" EMT, (2) #12 & (1) #12 EGC,
2	BLR-B44-2		1	20	100	3/4" EMT, (2) #12 & (1) #12 EGC,
3	BLR-B44-3		1	20	100	3/4" EMT, (2) #12 & (1) #12 EGC,
4	PUMP-B44-1		1	20	100	3/4" EMT, (2) #12 & (1) #12 EGC,
5	PUMP-B44-2		1	20	100	3/4" EMT, (2) #12 & (1) #12 EGC,
6	PUMP-B44-3		1	20	100	3/4" EMT, (2) #12 & (1) #12 EGC,
7	PUMP-B44-4		3	20	100	3/4" EMT, (4) #12 & (1) #12 EGC,
8	PUMP-B44-5		3	20	100	3/4" EMT, (4) #12 & (1) #12 EGC,
9	---		-	-	-	
10	---		-	-	-	
11	---		-	-	-	
12	---		-	-	-	
13	SPACE					
14	SPACE					
15	SPACE					
16	SPACE					
17	SPACE					
18	SPACE					

BUILDING 44

KEY PLAN

NAVSTA DRAWING NO. 44552-412

SYM	DESCRIPTION	DATE	APPR

NAVFAC

AMES & WHITAKER Architects

BID SET SUBMISSION

12/30/19

DES KWK | DRW GJG | CHK KWK

<<PM/DM>> RC

BRANCH MANAGER XX

CHIEF ENG/ARCH XXX

<<XXX>> XX

DEPARTMENT OF THE NAVY
NAVAL FACILITIES ENGINEERING COMMAND
NORTHEAST IPT
NAVAL FACILITIES ENGINEERING COMMAND ~ MID-ATLANTIC
NAVAL STATION - NORFOLK, VIRGINIA
NAVAL STATION NEWPORT
NEWPORT, RI
DECENTRALIZE STEAM AT BOILER PLANT A6
B44 ELECTRICAL PLAN

SCALE: AS NOTED

EPROJECT NO.: 1389839

CONSTR. CONTR. NO.

NAVFAC DRAWING NO. 12799493

SHEET 63 OF 65

E102

DRAWFORM REVISION: 10 MARCH 2009

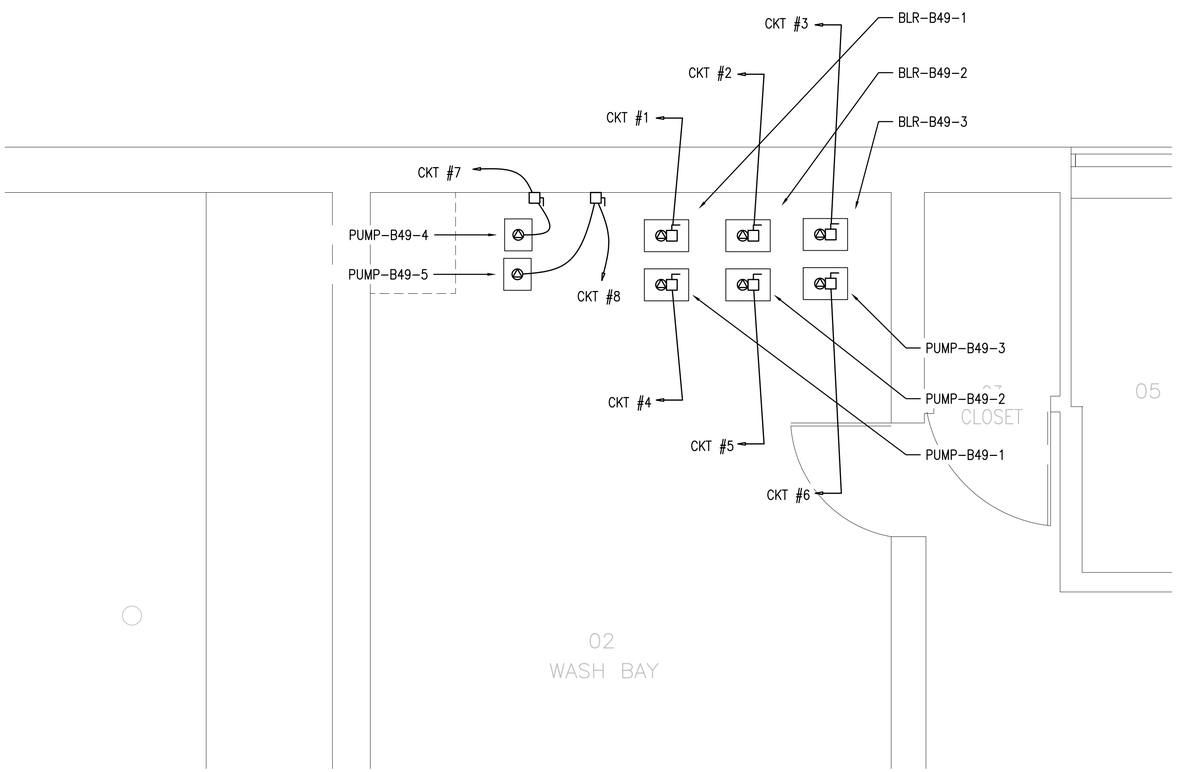

1
E103

BUILDING 49
PARTIAL FLOOR PLAN

SCALE: 1/2" = 1'-0" 0 1' 2' 4'

FEEDER AND BRANCH CIRCUITS TO ADD SCHEDULE

	CIRCUIT AND LOAD INFORMATION			BREAKER			FEEDER / BRANCH SIZE	FEED FROM	
Ckt. No.	Circuit Designation	Voltage VAC	# of Phases	Num. Pole	Trip Amps	Frame Amps	Wire Qty and Size (min.)	Source Panel	Work and Coments
1	BLR-B49-1	120	1	1	20	100	3/4" EMT, (2) #12 & (1) #12 EGC,	49-A	PROVIDE HOME RUN TO SOURCE PNL INDICATED. PROVIDE BREAKER IN SOURCE PNL
2	BLR-B49-2	120	1	1	20	100	3/4" EMT, (2) #12 & (1) #12 EGC,	49-A	PROVIDE HOME RUN TO SOURCE PNL INDICATED. PROVIDE BREAKER IN SOURCE PNL
3	BLR-B49-3	120	1	1	20	100	3/4" EMT, (2) #12 & (1) #12 EGC,	49-A	PROVIDE HOME RUN TO SOURCE PNL INDICATED. PROVIDE BREAKER IN SOURCE PNL
4	PUMP-B49-1	120	1	1	20	100	3/4" EMT, (2) #12 & (1) #12 EGC,	49-A	PROVIDE HOME RUN TO SOURCE PNL INDICATED. PROVIDE BREAKER IN SOURCE PNL
5	PUMP-B49-2	120	1	1	20	100	3/4" EMT, (2) #12 & (1) #12 EGC,	49-A	PROVIDE HOME RUN TO SOURCE PNL INDICATED. PROVIDE BREAKER IN SOURCE PNL
6	PUMP-B49-3	120	1	1	20	100	3/4" EMT, (2) #12 & (1) #12 EGC,	49-A	PROVIDE HOME RUN TO SOURCE PNL INDICATED. PROVIDE BREAKER IN SOURCE PNL
7	PUMP-B49-4	120	1	2	20	100	3/4" EMT, (2) #12 & (1) #12 EGC,	49-A	PROVIDE HOME RUN TO SOURCE PNL INDICATED. PROVIDE BREAKER IN SOURCE PNL
8	PUMP-B49-5	120	1	2	20	100	3/4" EMT, (2) #12 & (1) #12 EGC,	49-A	PROVIDE HOME RUN TO SOURCE PNL INDICATED. PROVIDE BREAKER IN SOURCE PNL

BUILDING 49

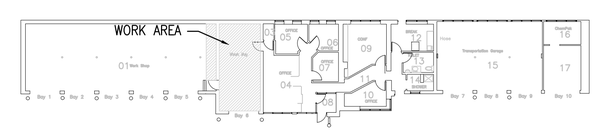

KEY PLAN

NAVSTA DRAWING NO.
44553-412

SYM	DESCRIPTION	DATE	APPR

NAVFAC

AMES & WHITAKER Architects

BID SET SUBMISSION

12/30/19

DES KWK | DRW GJG | CHK KWK

<<PM/DM>> RC

BRANCH MANAGER XX

CHIEF ENG/ARCH XXX

<<XXX>> XX

DEPARTMENT OF THE NAVY
NAVAL FACILITIES ENGINEERING COMMAND
NORTHEAST IPT
NAVAL FACILITIES ENGINEERING COMMAND ~ MID-ATLANTIC
NAVAL STATION - NORFOLK, VIRGINIA
NAVAL STATION NEWPORT
NEWPORT, RI

DECENTRALIZE STEAM AT BOILER PLANT A6

B49 ELECTRICAL PLAN

SCALE: AS NOTED

EPROJECT NO.: 1389839

CONSTR. CONTR. NO.

NAVFAC DRAWING NO.
12799494

SHEET 64 OF 65

E103

DRAWFORM REVISION: 10 MARCH 2009

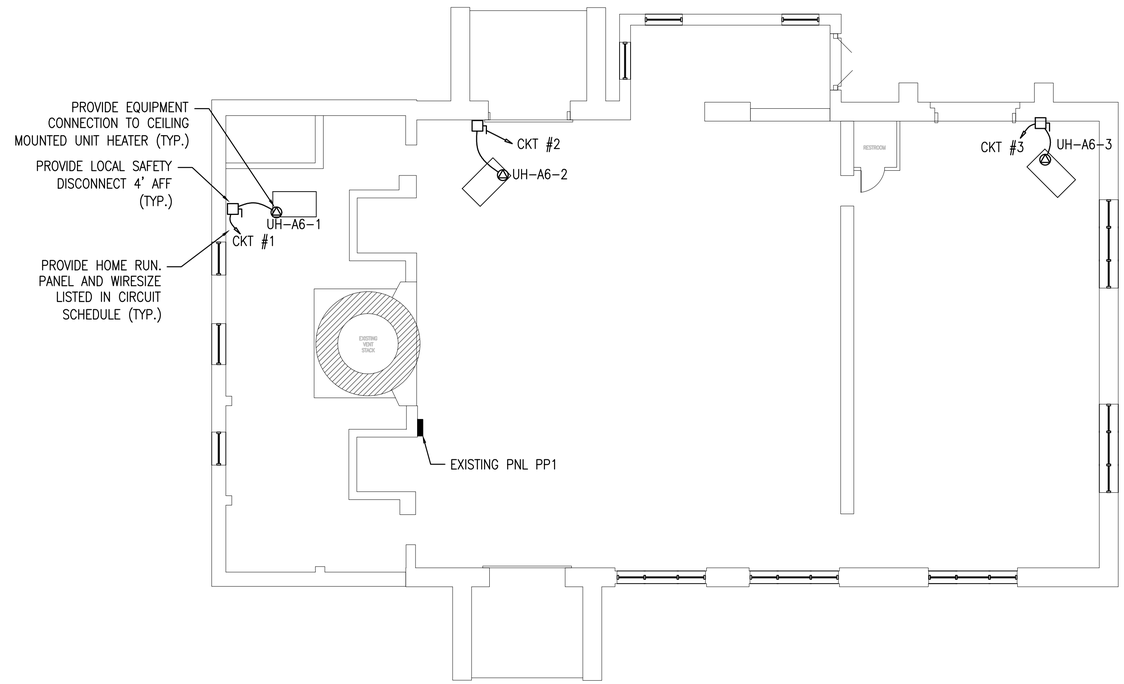

1
E104

BUILDING A6
PARTIAL FLOOR PLAN

SCALE: 1/8" = 1'-0" 0 4' 8' 16'

FEEDER AND BRANCH CIRCUITS TO ADD SCHEDULE

	CIRCUIT AND LOAD INFORMATION			BREAKER			FEEDER / BRANCH SIZE	FEED FROM	
Ckt. No.	Circuit Designation	Voltage VAC	# of Phases	Num. Pole	Trip Amps	Frame Amps	Wire Qty and Size (min.)	Source Panel	Work and Coments
1	UH-1	120	1	1	25	100	3/4" EMT, (2) #10 & (1) #10 EGC,	PP1	PROVIDE HOME RUN TO SOURCE PNL INDICATED. PROVIDE BREAKER IN SOURCE PNL
2	UH-2	120	1	1	25	100	3/4" EMT, (2) #10 & (1) #10 EGC,	PP1	PROVIDE HOME RUN TO SOURCE PNL INDICATED. PROVIDE BREAKER IN SOURCE PNL
3	UH-3	120	1	1	25	100	3/4" EMT, (2) #10 & (1) #10 EGC,	PP1	PROVIDE HOME RUN TO SOURCE PNL INDICATED. PROVIDE BREAKER IN SOURCE PNL

SYM	DESCRIPTION	DATE	APPR

NAVFAC

AMES & WHITAKER Architects
MEMBERS OF THE AMERICAN INSTITUTE OF ARCHITECTS
9 Shady Road Bellingham, Massachusetts 02019 (508) 883-8844 Fax (508) 883-8847

BID SET SUBMISSION

12/30/19

DES KWK | DRW GJG | CHK KWK

<<PM/DM>> RC
BRANCH MANAGER XX
CHIEF ENG/ARCH XXX
<<XXX>> XX

DEPARTMENT OF THE NAVY
NAVAL FACILITIES ENGINEERING COMMAND
NORTHEAST IPT
NAVAL FACILITIES ENGINEERING COMMAND ~ MID-ATLANTIC
NAVAL STATION ~ NORFOLK, VIRGINIA
NAVAL STATION NEWPORT
NEWPORT, RI
DECENTRALIZE STEAM AT BOILER PLANT A6
A6 ELECTRICAL PLAN

SCALE: AS NOTED
EPROJECT NO.: 1389839
CONSTR. CONTR. NO.
NAVFAC DRAWING NO. 12799495
SHEET 65 OF 65

NAVSTA DRAWING NO. 44554-412

E104

DRAWFORM REVISION: 10 MARCH 2009