August 12, 2026

This is a COMBINED SYNOPSIS/SOLICITATION for commercial items prepared in accordance with the information in FAR part 12, using Simplified Acquisition Procedures found at (FAR 13), as supplemented with the additional information included in this notice. This announcement constitutes the only solicitation; a written solicitation will not be issued. PAPER COPIES OF THIS SOLICITATION WILL NOT BE AVAILABLE. This combined synopsis/solicitation SHALL be posted to SAM.gov.

The RFQ number is **SPMYM4-26-Q-0834 Positioning Finger.** This solicitation documents and incorporates provisions and clauses in effect through FAC 2025-06 October 1, 2025, and DFARS Change Notice **20251110.** It is the responsibility of the contractor to be familiar with the applicable clauses and provisions. The clauses may be accessed in full text at these address(s):
https://www.ecfr.gov
https://www.acquisition.gov/content/list-sections-affected
http://www.acq.osd.mil/dpap/dars/change_notices.html

The FSC Code is 3950 and the NAICS code is 332312. The Small Business Standard is **500** employees. **This requirement is 100% Small Business Set-Aside.**

Evaluation criteria are Lowest Price Technically Acceptable (LPTA). SPRS will be used to determine vendor responsibility. Potential contractors will be screened for responsibility in accordance with FAR 9.104.

DLA Weapons Support, Pearl Harbor requests responses from qualified sources capable of providing the requested item(s). Interested parties must fill out the required request for quote form saved in the attachment section.

- ***Requirement is only <u>one quote per vendor</u>. Multiple quotes will not be accepted.***
- ***All Attachments posted on this solicitation must be completed and returned.***

REQUEST FOR QUOTATION

Please provide delivered prices (FOB Destination)

***** PLEASE FILL OUT THIS FORM COMPLETELY AND SUBMIT AS YOUR QUOTE *****

REFERENCE: SPMYM4-26-Q-0834

SET ASIDE: 100% SMALL BUSINESS SET ASIDE

NAICS: 332312

QUOTE DUE: Fri, 08/14/26 1600 HST

CONTACT

DLA MARITIME – PEARL HARBOR

CONTRACT SPECIALIST: Floyd Shiroma

Email Quotes to: Floyd.Shiroma.civ@us.navy.mil

VENDOR INFORMATION

Vendor Name:

CAGE Code:

Phone:

Email:

Quoted Valid for ___ Days

** In accordance with FAR 52.204-7(b)(1), an Offeror is required to be registered in SAM when submitting an offer or quotation, and must be listed as active, to prevent unduly delaying award. Information, instructions, forms, etc. for the System for Award Management (SAM) are available at https://www.sam.gov/portal/public/SAM/ **

Attention: Provisions below MUST be filled in to be considered for award.

SHIPPING INFORMATION

PLACE OF MFG/COUNTRY OF ORIGIN: _____

ESTIMATED DELIVERY TO PEARL HARBOR_____ Calendar Days ARO

FOB TERMS: DESTINATION

SHIP TO:

DoDAAC: N32253

Country Code: USA

PEARL HARBOR NAVAL SHIPYARD IMF

667 SAFEGUARD STREET, BLDG 167-1 RECV 808-473-8000 X4961

PEARL HARBOR, HI 96860-5033

UNITED STATES

Government Representative, DLA Distribution

Email: distrcustomerservice@dla.mil

IMPORTANT NOTE: The below Required Delivery Date (RDD) shall be met or exceeded in order to ensure your offer is considered responsive. If no offers are received which meet or exceed the Government's RDD, award may proceed to the LPTA offeror, and may be made based on soonest delivery.

GOVERNMENT RDD: 08/31/26

PAYMENT INFORMATION

PAYMENT TERMS_____%_____DAYS DISCOUNT TERMS _____

Preferred Method payment: Wide Area Workflow (WAWF)

Payment terms are always Net 30 AFTER the material has passed inspection and has been accepted.

REQUEST AND RECEIVING REPORTS is applicable to this solicitation. Please note that the WAWF (Wide Area Work Flow) will be used as the method of payment for supplies and/or services procured under this solicitation. Information regarding WAWF is available on the internet at https://wawf.eb.mil.

YOUR COMPANY INFORMATION

YOUR BUSINESS SIZE: ___ Large (LG), ___ Small (SB), ___ Small-Disadvantaged Business (SDB), ___ Veteran-Owned Small Business (VOSB), ___ Women-Owned Small Business (WOSB), ___ Economically Disadvantaged Women-Owned Small Business (EDWOSB), ___ Service Disabled Veteran Owned Small Business (SDOVSB), ___ (HUBZONE), ___ (8a).

QUOTING AS MANUFACTURER? Yes ___ No ___

Name of Quoted Manufacturer _____

QUOTING AS: ___ **AUTHORIZED DISTRIBUTOR** or ___ **THIRD PARTY DEALER**

IS YOUR COMPANY'S PRICING INDEPENDENT FROM THE MANUFACTURER? Yes ___ **No** ___

SAM CAGE CODE: _____

Representations must be filled in below, and provided with the submission of the quote.

Offers received without completed representations may not be considered for award.

PRINTED NAME_____**SIGNATURE**_____

DATE_____

MATERIAL INFORMATION

ITEM	DESCRIPTION	QTY	U/I	UNIT PRICE	TOTAL PRICE
0001	**Positioning Finger**	**2**	**EA**	**_____**	**_____**

POSITIONING FINGER; NI-AL-BRZ, MIL-B-24480A (SUPERCEDING MIL-B-21230, ALY

- **In accordance with attached sketch shown on page 11 of this document**
- **Mercury Exclusion Clause Invoked**
- **Quote must include documentation as evidence that the vendor is quoting the required material**

Requirements:

Freight and delivery must be included in price.

Vendor quote must be filled out on this form and returned as part of your submittal.

Attached Provisions and Clauses (Representation section) must be filled out and returned with your quote.

Is there a minimum order quantity? SPECIFY: _____

Are there any quantity breaks? RANGE AND PRICING: _____

Does the item offered contain hazardous materials? No ___ Yes ___ (MSDS Required)

EVALUATION CRITERIA

☒ If checked, the Government anticipates making a single award (all or none), If this box is not checked, requirement will be evaluated for split award.

Source selection criteria:

1. TECHNICALLY ACCEPTABLE
2. PRICE
3. DELIVERY

Quotations submitted by each vendor will be evaluated in accordance with the specifications provided in the solicitation, and determined to be either acceptable or unacceptable. Technical submissions that do not meet the minimum requirements will be rated as "Unacceptable" and will no longer be considered for further competition or award. The Government intends to make an award without discussions.

☒ If checked, **SPRS** evaluation procedures apply to determine vendor responsibility.

Other than Certified Cost and Pricing Data may be requested to support fair and reasonable price determination.

INSPECTION

Inspection Location: ☒ Final Inspection at Destination

Inspection Terms: QA1 ☐ , QA2 ☐ , QA3 ☐ , QA4 ☒

Inspection Time: QA-4 material has a 7-day inspection time and QA-2 and QA-3 have a 30-day inspection time.

BUY AMERICAN

DFARS Buy American Act - Balance of Payments applies if ≥$15,000.00.

DFARS Buy American Act - Free Trade Agreements may apply if ≥ $25,000.00.

ATTACHMENTS:

CLAUSES AND PROVISIONS

FAR CLAUSES AND PROVISIONS

52.204-7System for Award Maintenance

52.204-9Personal Identity Verification of Contractor Personnel

52.204-13 SAM Maintenance

52.204-19 Incorporation by Reference of Representations and Certifications

52.204-24* See Attachment for this provision

52.204-26* See Attachment for this provision

52.204-29 FASCSA Representation* See Attachment for this provision

52.211-14 Notice of Priority Rating

52.211-15 Defense Priority And Allocation Requirements

52.211-17 Delivery of Excess Quantities

52.212-1 Instructions to Offerors - Commercial Products and Commercial Services

52.212-3 Offeror Reps and Certs - Commercial Products and Commercial Services

52.212-4 Contract Terms and Conditions – Commercial Items

52.219-1 Alt 1 Small Business Program Representations

52.223-22 Sustainable Products and Services (DEVIATION 2025-O0004) in lieu of clause at FAR 52.223-23.

52.225-25 Prohibition on Contracting with Entities Engaging in Certain Activities or Transactions Relation to Iran-Reps and Certs

52.232-39 Unenforceability of Unauthorized Obligations

52.233-2 Service of Protest

52.242-13 Bankruptcy

52.242-15 Stop Work Order

52.243-1 Changes Fixed Price

52.246-1 Contractor Inspection Requirements

52.247-34 F.O.B-Destination

52.252-1 Solicitation Provisions Incorporated by Reference

52.252-2 Clauses Incorporated by Reference

52.253-1 Computer Generated Forms

52.212-5, Contract Terms and Conditions Required to Implement Statutes or Executive Orders - Commercial Items including all base terms, conditions, and clauses outlined within the clause, plus the following clauses that have been specifically selected (checked off within the clause) for this procurement:

52.203-19 Prohibition on Requiring Certain Internal Confidentiality Agreements or Statements

52.204-23 Prohibition on Contracting for Hardware, Software, and Services Developed or Provided by Kaspersky Lab and Other Covered Entities

52.204-25	Prohibition on Contracting for Certain Telecommunications and Video Surveillance Services or Equipment
52.209-10	Prohibition on Contracting with Inverted Domestic Corporations
52.232-40	Providing Accelerated Payments to Small Business Subcontractors
52.233-3	Protest After Award
52.233-4	Applicable Law for Breach of Contract Claim
52.203-15	Whistleblower Protections when using recovery act funds
52.204-27	Prohibition on a ByteDance Covered Application
52.204-30	FASCSA Federal Acquisition Supply Chain Security Act Orders-Prohibition
52.219-28	Post-Award Small Business Program Representation
52.222-3	Convict Labor
52.222-19	Child Labor
52.222-50	Combating Trafficking in Persons Both Prime and Sub
52.222.90	**Addressing DEI Discrimination by Federal Contractors**
52.223-11	Ozone Depleting Substances
52.225-13	Restriction on Certain Foreign Purchases
52.226-8	Encouraging Contractor Policies to Ban Text Messaging While Driving
52.232-33	Payment by EFT-SAM
52.232-34	Payment by EFT-Other than SAM
52.232-36	Payment by Third Party
52.242-5	Payments to Small Business Subcontractors
52.247-64	Preference for Privately Owned US-Flag Commercial

DFARS CLAUSES AND PROVISIONS

252.203-7000 Requirements Relating to Compensation of Former DoD Officials,

252.203-7002, Requirement to Inform Employees of Whistleblower Rights

252.203-7005 Representation Relating to Compensation of Former DoD Officials

252.204-7003. Control of Government Personnel Work Product

252.204-7004 Antiterrorism Awareness Training for Contractors.

252.204-7008 Compliance With Safeguarding Covered Defense Information Controls

252.204-7009 Limitations on the Use or Disclosure of Third-Party Contractor Reported Cyber Incident Information

252.204-7015, Disclosure of Information to Litigation Support Contractors

252.204-7016, * See Attachment for this provision.

252-204-7017, Prohibition on the Acquisition of Covered Defense Telecommunications Equipment or Services-Representation

252.204-7018, Prohibition on the Acquisition of Covered Defense Telecommunications Equipment or Services.

252.204-7024 Notice on the Use of the Supplier Performance Risk System

252.209-7999, Representation by Corporations regarding an Unpaid Delinquent Tax Liability

252.211-7003, Item Unique Identification and Valuation

252.213-7000 Notice to Prospective Suppliers on Use of Supplier Performance Risk System in Past Performance Evaluations.

252.223-7006, Prohibition on Storage, Treatment, and Disposal of Toxic or Hazardous Materials.

252.223-7008 Prohibition of Hexavalent Chromium

252.225-7001 Buy American and Balance of Payments Program

252.225-7002 Qualifying Country Sources as Subcontractors

252.225-7012 Preference for Certain Domestic Commodities.

252.225-7021 Trade Agreements

252.225-7036 __ Basic, __ Alt I, __Alt IV, Buy American Free Trade Agreements

252.225-7048, Export Controlled Items

252.225-7059 Prohibition on Certain Procurements from the Xinjiang Uyghur Autonomous Region - Representation

252.225-7060 Prohibition on Certain Procurements from the Xinjiang Uyghur Autonomous Region

252.231-7000, Supplemental Cost Principles.

252.232-7003, Electronic Submission of Payment Requests

252.232-7006, Wide Area Workflow Payment Instructions ***See Attachment for Full Text**

252.232-7010, Levies on Contract Payments

252.243-7001, Pricing of Contract Modifications

252.243-7002, Requests for Equitable Adjustment

252.244-7000, Subcontracts for Commercial Items

252.247-7023, Transportation of Supplies By Sea

Note: Vendor shall list the country of origin for each line item.

DLAD CLAUSES AND PROVISIONS (See Attachment for Full Text)

5452.233-9001, Disputes: Agreement to Use Alternative Disputes Resolution

DLA PROCUREMENT NOTES (See Attachment for Full Text)

C01 Superseded Part Numbered Items (SEP 2016)

C02 Manufacturing Phase-Out or Discontinuation of Production, Diminishing Sources, and Obsolete Materials or Components (DEC 2016)

C03 Contractor Retention of Supply Chain Traceability Documentation (MAR 2023)

C08 Tailored Logistics Support Purchasing Reviews

C14 Repackaging or Relabeling to Correct Deficiencies (AUG 2017)

H01 Qualified Products List (QPL) for Federal Supply Class (FSC) 5935 Connector Assemblies and Contacts

L06 Agency Protests (DEC 2016)

L08 Use of Supplier Performance Risk System (SPRS) in Past Performance Evaluations

L22 Restriction of Alternate Offers for Source Controlled Items

L31 Additive Manufacturing (JUN 2018)

M05 Evaluation Factor for Unused Former Government Surplus Property (SEP 2016)

M06 Evaluation of Offers for Part Numbered Items (SEP 2016)

LOCAL CLAUSES (See Attachment for Full Text):

YM4 E7F754 CERTIFICATIONS REQUIRED WITH DELIVERY OF MATERIAL

YM4 L001 EUROPEAN UNION RESTRICTIONS REGARDING NONMANUFACTURED WOOD PACKAGING AND PALLETS

YM4 L003 UNIT PRICES

YM4 L331 REVIEW OF AGENCY PROTESTS

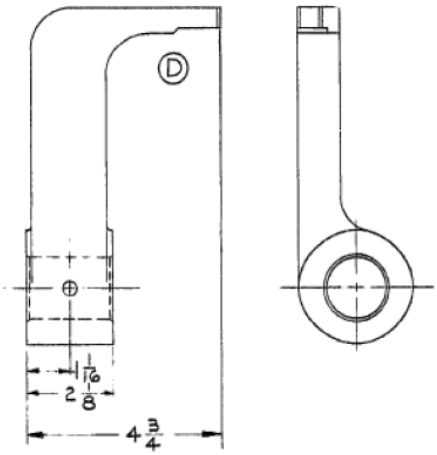

DETAIL 12-C
POSITIONING FINGER (28) AS SHOWN
POSITIONING FINGER (48) TO OPP HAND
SCALE: 6"=1'-0
FOR INFO NOT SHOWN SEE DET 9-C

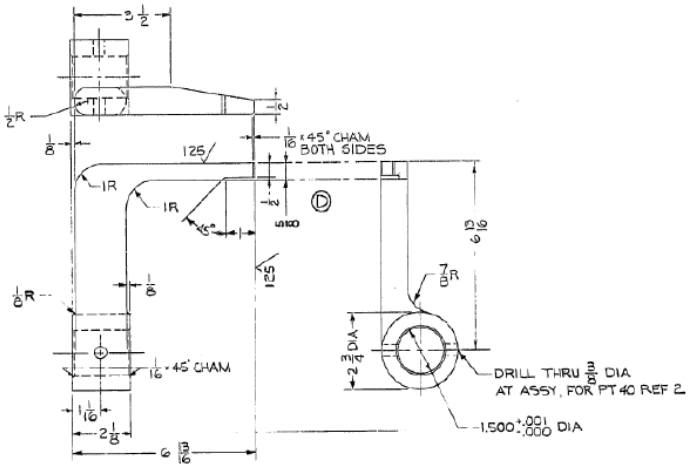

DETAIL 9-C
POSITIONING FINGER (35) AS SHOWN
POSITIONING FINGER (36) TO OPP HAND
SCALE: 6"=1'-0