National Guard Bureau

Construct Alert GOV Parking Shelters

Truax Field, Madison, Wisconsin

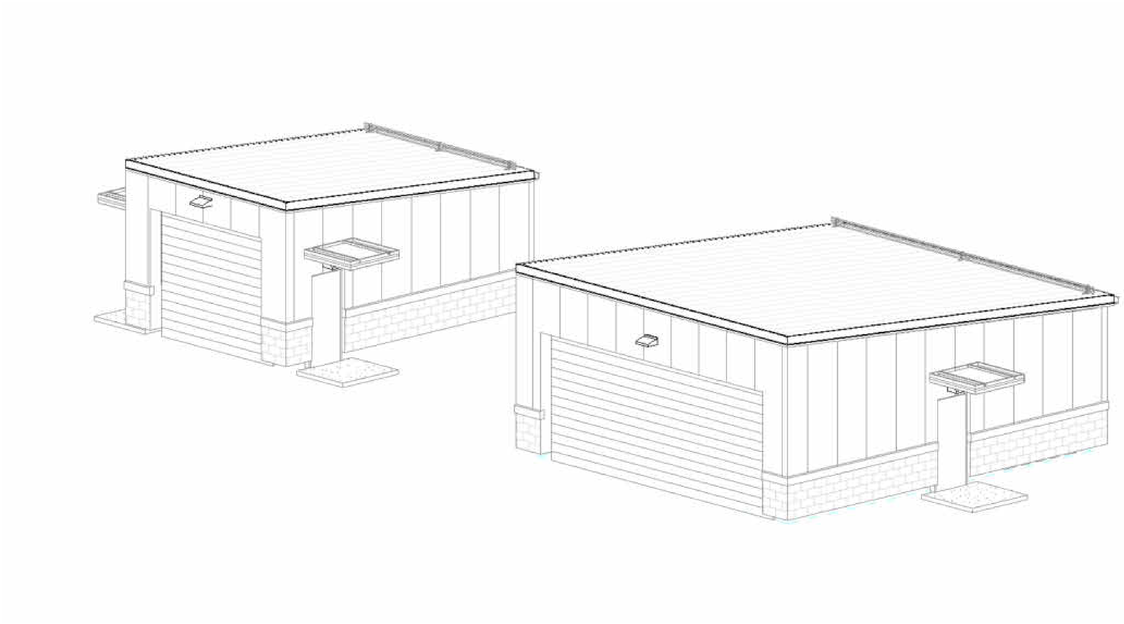

RTA Submission

June 15, 2026

WISCONSIN
JASON T. HOLUBY
A-13101
OKLAHOMA CITY
CHIEF
6/15/2026

WISCONSIN
LINDSAY D. HAUSMAN
E-48143-6
SPRINGFIELD
ILLINOIS
PROFESSIONAL ENGINEER
Lindsay Hausman

WISCONSIN
GENE O. BROWN
E-47748
OKLAHOMA CITY
OK
PROFESSIONAL ENGINEER
6-15-26

WISCONSIN
JOHN T. LITTLE
E-47933
EDMOND
OK
PROFESSIONAL ENGINEER
6/15/2026

5801 Broadway Extension, Suite 500
Oklahoma City, OK 73118-7436
405.840.2931 | fsb-ae.com

03324 F-35 6-Projects Alert Parking

SHEET INDEX

NUMBER	TITLE
GENERAL	
G-001	COVER SHEET
G-002	SHEET INDEX
G-101	CODE COMPLIANCE PLAN - GROUND FLOOR
CIVIL	
C-101	ACCESS PLAN
C-201	STORM WATER POLLUTION PREVENTION PLAN
C-202	STORM WATER POLLUTION PREVENTION DETAILS
C-301	REMOVAL PLAN
C-401	PROPOSED PLAN
C-402	TYPICAL SECTION AND PAVEMENT DETAILS
C-501	GRADING PLAN
C-601	UTILITY PLAN
C-602	DRAINAGE SCHEDULES AND DETAILS
C-603	DRAINAGE DETAILS
STRUCTURAL	
S-001	GENERAL NOTES
SB101	FOUNDATION PLAN
SB501	FOUNDATION DETAILS
SF101	FRAMING PLAN
SF201	FRAMING ELEVATIONS
SF202	FRAMING ELEVATIONS
SF501	FRAMING DETAILS
ARCHITECTURAL	
A-001	ABBREVIATIONS AND SYMBOLS
AE100	COMPOSITE GROUND FLOOR PLAN
AE201	BUILDING ELEVATIONS
AE301	BUILDING SECTIONS
AE501	DETAILS
AE600	SCHEDULES
ELECTRICAL	
E-001	LEGEND, ABBREVIATIONS, & MOUNTING HEIGHT DETAIL
E-101	ELECTRICAL POWER PLAN
E-102	ELECTRICAL DETAILS AND PANEL SCHEDULE

5801 Broadway Extension, Suite 500
Oklahoma City, OK 73118-7436
405.840.2931 | fsb-ae.com

WISCONSIN
JASON T. HOLUBY
A-13101
OKLAHOMA CITY
OK
ARCHITECT
6/15/2026

115TH FIGHTER WING

Construct Alert GOV Parking Shelters

Truax Field, Madison, Wisconsin

REVISION HISTORY:

△	DESCRIPTION	DATE

PROJECT INFORMATION:

DESIGNED BY:	JBC
DRAWN BY:	JBC
REVIEWED BY:	JBC
PROJECT MANAGER:	NWC

PROJECT NUMBER: FSB2020-332-06

SHEET TITLE: **SHEET INDEX**

ISSUE DATE: JUNE 15, 2026

SHEET NUMBER: G-002

6/16/2026 11:32:08 AM

Autodesk Docs://Wisconsin ANG - Alert Parking 00324_Arch_R/V725.rvt

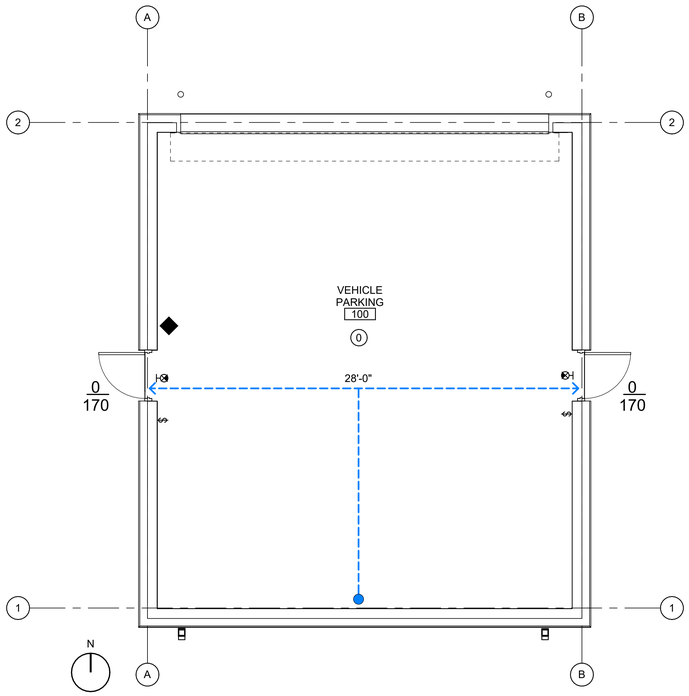

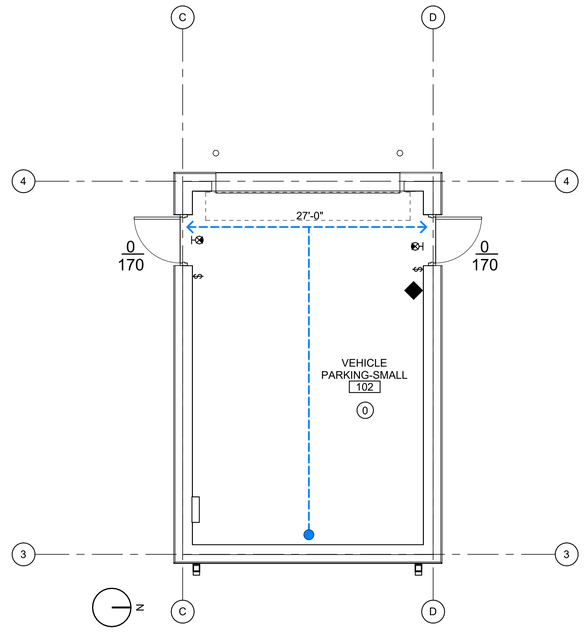

D2 LIFE SAFETY/OCCUPANCY PLAN

SCALE: 1/4" = 1'-0"

CODE SUMMARY

INTERNATIONAL BUILDING CODE (IBC) 2024
NATIONAL ELECTRICAL CODE (NEC) 2026
UFC 1-200-01 DATED 01 SEPT. 2022 CHANGE 4, 17 DEC. 2024
ASCE 7-22
ANG ETL 24-02, CHANGE 1, 10 SEP 2025
ANG ETL 11-12
ANGI 32-1023
NFPA 70 2026
INDIVIDUAL CLASSIFICATION OF OCCUPANCY ENCLOSED PARKING STRUCTURES - UNOCCUPIED
FIRE PROTECTION CRITERIA - NON SPRINKLERED
AT/FP REQUIREMENTS EXEMPT

LIFE SAFETY LEGEND

DENOTES EXIT ROUTE

TRAVEL DISTANCE

38'-0"

DENOTES BUILDING EXIT

STARTING POINT

19 / 240

OCCUPANT LOAD NUMBER AT EXIT COMPONENT

EXIT COMPONENT MAXIMUM OCCUPANT CAPACITY NUMBER

(#) # OF OCCUPANTS

◆ DRY CHEMICAL FIRE EXTINGUISHER ON WALL BRACKET MOUNTED 48" AFF. (EXTINGUISHERS PROVIDED BY BASE)

FSB

5801 Broadway Extension, Suite 500
Oklahoma City, OK 73118-7436
405.840.2931 | fsb-ae.com

WISCONSIN
JASON T. HOLUBY
A-13101
OKLAHOMA CITY
OK
ARCHITECT
6/15/2026

115th FIGHTER WING

Construct Alert GOV Parking Shelters

Truax Field, Madison, Wisconsin

REVISION HISTORY:

△	DESCRIPTION	DATE

PROJECT INFORMATION:

DESIGNED BY:	JBC
DRAWN BY:	JBC
REVIEWED BY:	JBC
PROJECT MANAGER:	NWC

PROJECT NUMBER: FSB2020-332-06

SHEET TITLE: CODE COMPLIANCE PLAN - GROUND FLOOR

ISSUE DATE: JUNE 15, 2026

SHEET NUMBER: G-101

0 2' 4' 8'
1/4" = 1'-0"

6/16/2026 11:28:54 AM

Autodesk Docs://Wisconsin ANG - Alert Parking 03324_Arch_R/V725.rvt

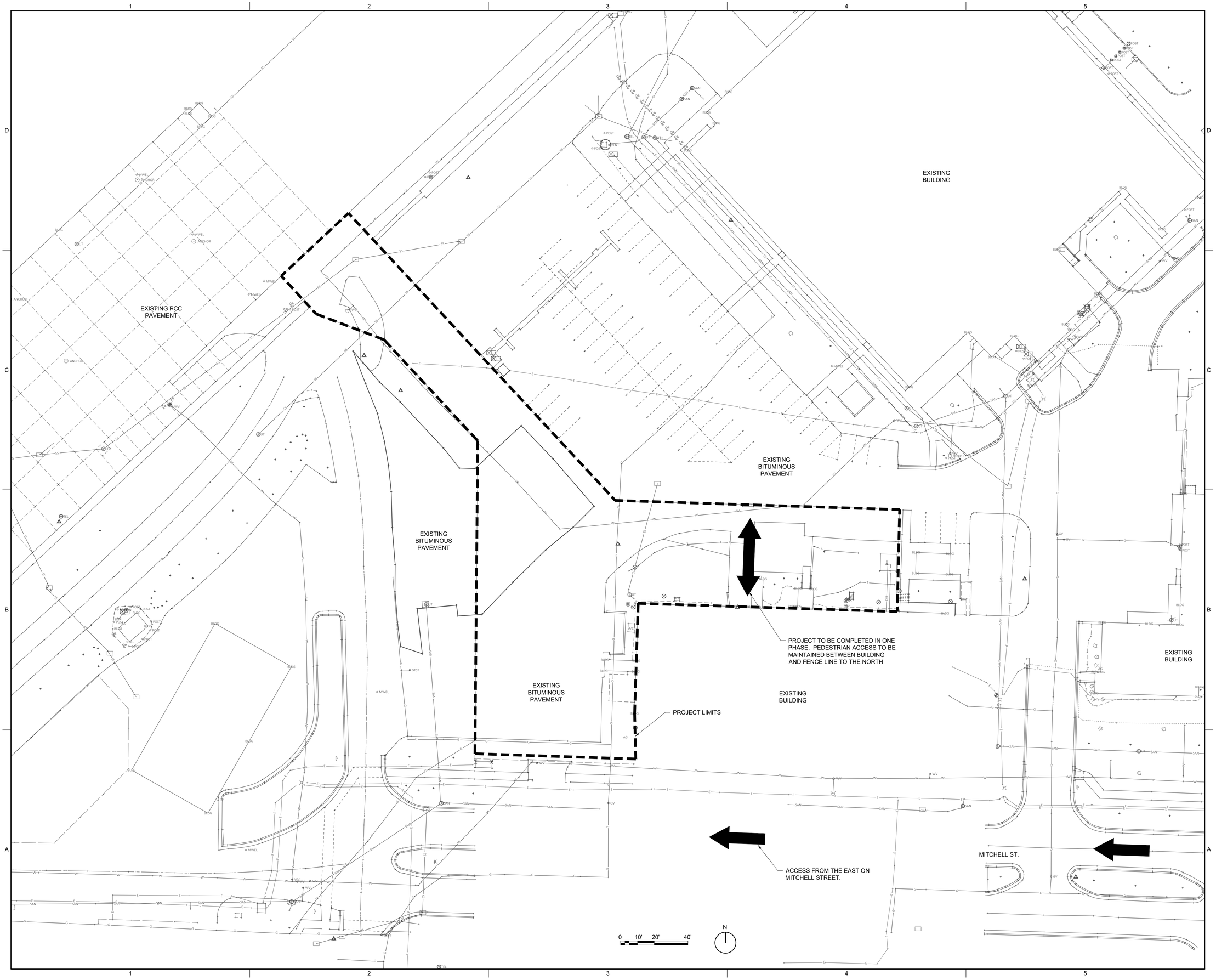

HANSON
Engineering | Planning | Allied Services

Offices Nationwide
www.hanson-inc.com

Hanson Professional Services Inc.
1525 S. 6th Street
Springfield, IL 62703
phone: 217-788-2450
fax: 217-788-2503

WISCONSIN
LINDSAY D. HAUSMAN
E-48143-6
SPRINGFIELD ILLINOIS
PROFESSIONAL ENGINEER

115th FIGHTER WING

Construct Alert GOV Parking Shelters

Truax Field, Madison, Wisconsin

REVISION HISTORY:

	DESCRIPTION	DATE

PROJECT INFORMATION:

DESIGNED BY:	LDH
DRAWN BY:	HLE
REVIEWED BY:	LDH
PROJECT MANAGER:	NWC

PROJECT NUMBER: FSB2020-332-06

SHEET TITLE: ACCESS PLAN

ISSUE DATE: JUNE 15, 2026

SHEET NUMBER: C-101

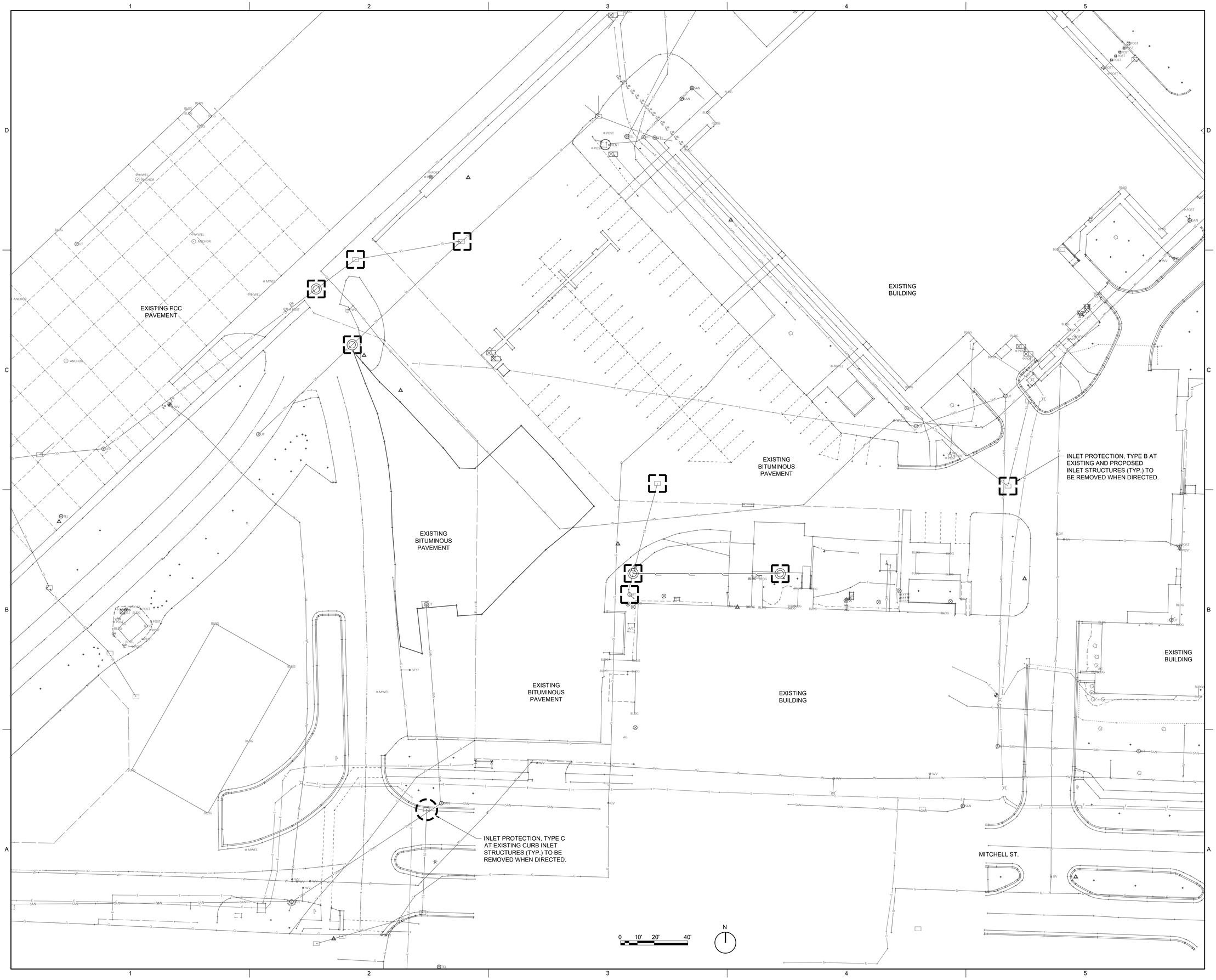

HANSON
Engineering | Planning | Allied Services

Offices Nationwide
www.hanson-inc.com

Hanson Professional Services Inc.
1525 S. 6th Street
Springfield, IL 62703
phone: 217-788-2450
fax: 217-788-2503

WISCONSIN
LINDSAY D. HAUSMAN
E-48143-6
SPRINGFIELD ILLINOIS
PROFESSIONAL ENGINEER

115th FIGHTER WING

Construct Alert GOV Parking Shelters

Truax Field, Madison, Wisconsin

REVISION HISTORY:

	DESCRIPTION	DATE

PROJECT INFORMATION:

DESIGNED BY:	LDH
DRAWN BY:	HLE
REVIEWED BY:	LDH
PROJECT MANAGER:	NWC

PROJECT NUMBER: FSB2020-332-06

SHEET TITLE: STORM WATER POLLUTION PREVENTION PLAN

ISSUE DATE: JUNE 15, 2026

SHEET NUMBER: C-201

SDD 8e10 Inlet Protection Type A, B, C and D

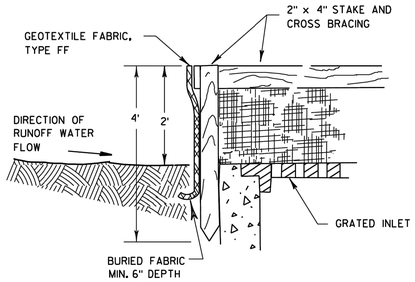

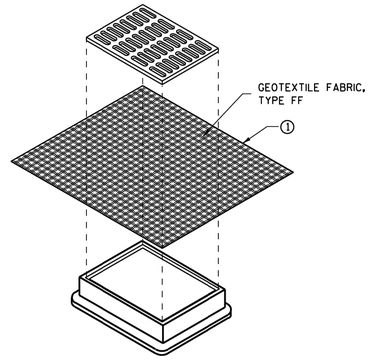

INLET PROTECTION, TYPE B (WITHOUT CURB BOX)

(CAN BE INSTALLED IN ANY INLET WITHOUT A CURB BOX)

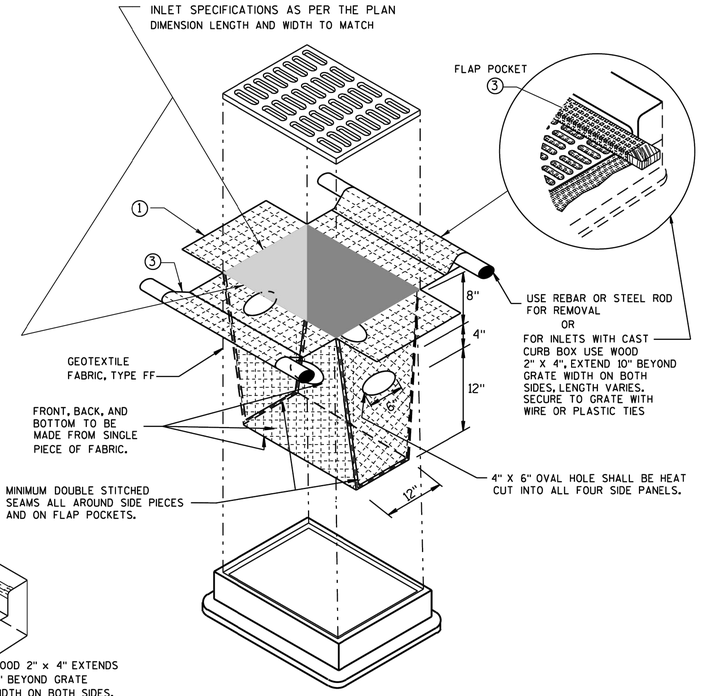

INLET PROTECTION, TYPE D

(CAN BE INSTALLED IN ANY INLET TYPE WITH OR WITHOUT A CURB BOX AS PER NOTE 2)

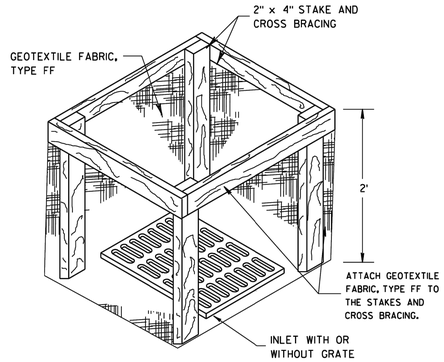

INLET PROTECTION, TYPE A

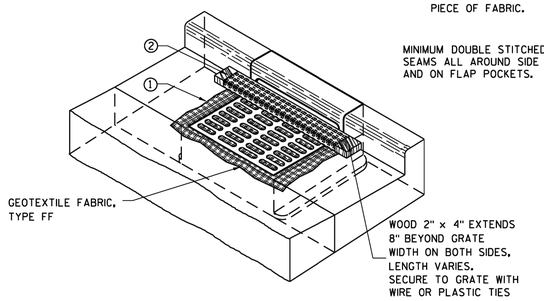

INLET PROTECTION, TYPE C (WITH CURB BOX)

GENERAL NOTES

INLET PROTECTION DEVICES SHALL BE MAINTAINED OR REPLACED AT THE DIRECTION OF THE ENGINEER.

MANUFACTURED ALTERNATIVES APPROVED AND LISTED ON THE DEPARTMENT'S EROSION CONTROL PRODUCT ACCEPTABILITY LIST MAY BE SUBSTITUTED.

WHEN REMOVING OR MAINTAINING INLET PROTECTION, CARE SHALL BE TAKEN SO THAT THE SEDIMENT TRAPPED ON THE GEOTEXTILE FABRIC DOES NOT FALL INTO THE INLET. ANY MATERIAL FALLING INTO THE INLET SHALL BE REMOVED IMMEDIATELY.

1. FINISHED SIZE, INCLUDING FLAP POCKETS WHERE REQUIRED, SHALL EXTEND A MINIMUM OF 10" AROUND THE PERIMETER TO FACILITATE MAINTENANCE OR REMOVAL.
2. FOR INLET PROTECTION, TYPE C (WITH CURB BOX), AN ADDITIONAL 18" OF FABRIC IS WRAPPED AROUND THE WOOD AND SECURED WITH STAPLES. THE WOOD SHALL NOT BLOCK THE ENTIRE HEIGHT OF THE CURB BOX OPENING.
3. FLAP POCKETS SHALL BE LARGE ENOUGH TO ACCEPT WOOD 2X4.

INSTALLATION NOTES

TYPE B & C

TRIM EXCESS FABRIC IN THE FLOW LINE TO WITHIN 3" OF THE GRATE.

THE CONTRACTOR SHALL DEMONSTRATE A METHOD OF MAINTENANCE, USING A SEWN FLAP, HAND HOLDS OR OTHER METHOD TO PREVENT ACCUMULATED SEDIMENT FROM ENTERING THE INLET.

TYPE D

DO NOT INSTALL INLET PROTECTION TYPE D IN INLETS SHALLOWER THAN 30", MEASURED FROM THE BOTTOM OF THE INLET TO THE TOP OF THE GRATE.

TRIM EXCESS FABRIC IN THE FLOW LINE TO WITHIN 3" OF THE GRATE.

THE INSTALLED BAG SHALL HAVE A MINIMUM SIDE CLEARANCE, BETWEEN THE INLET WALLS AND THE BAG, MEASURED AT THE BOTTOM OF THE OVERFLOW HOLES, OF 3". WHERE NECESSARY THE CONTRACTOR SHALL CINCH THE BAG, USING PLASTIC ZIP TIES, TO ACHIEVE THE 3" CLEARANCE. THE TIES SHALL BE PLACED AT A MAXIMUM OF 4" FROM THE BOTTOM OF THE BAG.

INLET PROTECTION TYPE A, B, C, AND D

STATE OF WISCONSIN
DEPARTMENT OF TRANSPORTATION

APPROVED
10-16-02 — DATE
/S/ Beth Cannestra — CHIEF ROADWAY DEVELOPMENT ENGINEER
FHWA

S.D.D. 8 E 10-2

S.D.D. 8 E 10-2

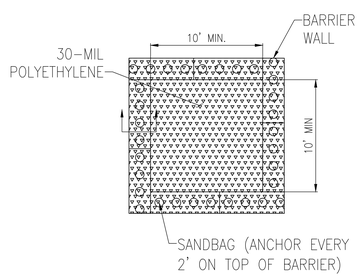

PLAN VIEW

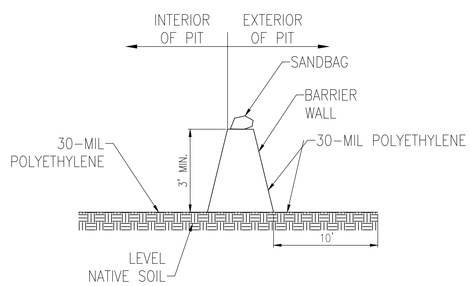

CROSS SECTION VIEW

NOTES:

1. IMPERMEABLE SHEETING MUST EXTEND OVER ENTIRE BASIN AND BERM TO PREVENT ESCAPE OF DISCHARGE.
2. PROTECT AREA AROUND UNIT FOR 10 FEET WITH PLASTIC UNDER AND AROUND UNIT TO CONTAIN SPILLS OR OVERFLOW.
3. FACILITY LINED WITH 30-MIL POLYETHYLENE LINER AND SECURED USING SAND BAGS, OR OTHER ANCHORS, AND SHALL BE FREE OF HOLES OR TEARS.
4. FACILITY IS TO BE LOCATED ON LEVEL GROUND.
5. WASHOUT NEEDS TO BE COVERED OR LIQUIDS TO BE REMOVED PRIOR TO IMPENDING STORMS TO PREVENT OVERFLOW.
6. IF EFFLUENT CANNOT BE REMOVED PRIOR TO ANTICIPATED RAINFALL EVENT, PLACE AND SECURE A NON-COLLAPSING, NON WATER COLLECTING COVER OVER THE WASHOUT FACILITY TO PREVENT ACCUMULATION AND PRECIPITATION OVERFLOW.
7. REMOVE WASHOUT WATER FROM HIGH VOLUME FACILITIES WITH A VACUUM TRUCK AND DISPOSE OF PROPERLY. DO NOT DISCHARGE WASTEWATER INTO THE ENVIRONMENT. (NOTE: ACIDITY, NOT PARTICULATES, IS ENVIRONMENTALLY HAZARDOUS)
8. DO NOT DISCHARGE WASHOUT WATER INTO THE ENVIRONMENT; FACILITATE EVAPORATION OF LOW VOLUME WASHOUT WATER.
9. INSPECT LINER FOR TEARS. AN INTACT LINER WILL ENSURE THAT CONCRETE WASTEWATER WILL NOT ESCAPE THE WASHOUT FACILITY.
10. REPLACE DAMAGED LINER IMMEDIATELY.
11. CHECK AREA SURROUNDING FACILITY FOR SIGNS OF EFFLUENT ESCAPING CONTAINMENT.
12. INSPECT WASHOUT AREA FOLLOWING POUR TO EVALUATE EFFECTIVENESS.
13. CHECK DEPTH OF SOLIDS TO ENSURE VOLUME IS SUFFICIENT FOR NEXT POUR.
14. INSPECT WASHOUTS PRIOR TO POUR TO ENSURE SUFFICIENT VOLUME IS AVAILABLE TO CONTAIN WASHOUT.
15. REMOVE TEMPORARY CONCRETE WASHOUT FACILITIES WHEN NO LONGER NEEDED AND RESTORE DISTURBED AREAS TO ORIGINAL CONDITION.
16. DISPOSE OF SOLIDIFIED CONCRETE WASTE, CONSIDERED CLEAN CONSTRUCTION OR DEMOLITION DEBRIS, PER THE WISCONSIN DEPARTMENT OF NATURAL RESOURCES REQUIREMENTS.

HANSON
Engineering | Planning | Allied Services
Offices Nationwide
www.hanson-inc.com

Hanson Professional Services Inc.
1525 S. 6th Street
Springfield, IL 62703
phone: 217-788-2450
fax: 217-788-2503

WISCONSIN LINDSAY D. HAUSMAN E-48143-6 SPRINGFIELD ILLINOIS PROFESSIONAL ENGINEER

115th FIGHTER WING

Construct Alert GOV Parking Shelters

Truax Field, Madison, Wisconsin

REVISION HISTORY:

△	DESCRIPTION	DATE

PROJECT INFORMATION:

DESIGNED BY:	LDH
DRAWN BY:	HLE
REVIEWED BY:	LDH
PROJECT MANAGER:	NWC

PROJECT NUMBER: FSB2020-332-06

SHEET TITLE: STORM WATER POLLUTION PREVENTION DETAILS

ISSUE DATE: JUNE 15, 2026

SHEET NUMBER: C-202

	LEGEND
	BITUMINOUS PAVEMENT REMOVAL
	PCC PAVEMENT REMOVAL
—X——X—	EXISTING FENCE
——SS——	EXISTING STORM
——SAN——	EXISTING SANITARY
——W——	EXISTING WATER
——G——	EXISTING GAS
——E——	EXISTING ELECTRICAL

1. BASED ON SURVEY, APPROXIMATELY 10% OF THE BITUMINOUS PAVEMENT REMOVAL AREA HAS PIERCED METAL PLANKING BELOW THE EXISTING PAVEMENT. IF ENCOUNTERED, THIS MATERIAL SHALL BE SAWCUT ALONG THE EXISTING FENCE LINE TO REMAIN AND REMOVED.
2. THE EXISTING BITUMINOUS PAVEMENT THICKNESS VARIES. MAXIMUM THICKNESS IS 9 INCHES.

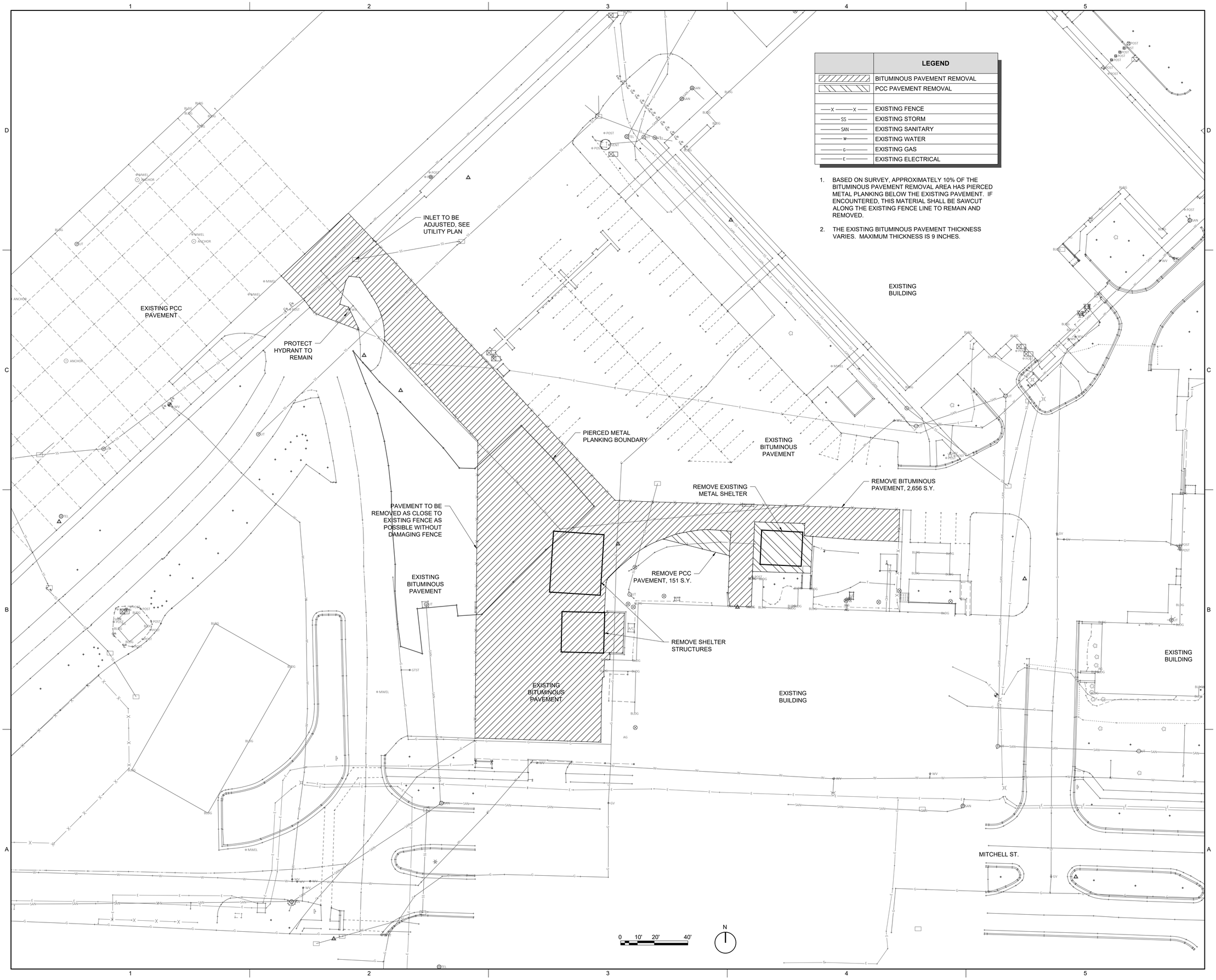

HANSON
Engineering | Planning | Allied Services

Offices Nationwide
www.hanson-inc.com

Hanson Professional Services Inc.
1525 S. 6th Street
Springfield, IL 62703
phone: 217-788-2450
fax: 217-788-2503

WISCONSIN
LINDSAY D. HAUSMAN
E-48143-6
SPRINGFIELD ILLINOIS
PROFESSIONAL ENGINEER

115TH FIGHTER WING

Construct Alert GOV Parking Shelters

Truax Field, Madison, Wisconsin

REVISION HISTORY:

△	DESCRIPTION	DATE

PROJECT INFORMATION:

DESIGNED BY:	LDH
DRAWN BY:	HLE
REVIEWED BY:	LDH
PROJECT MANAGER:	NWC

PROJECT NUMBER: FSB2020-332-06

SHEET TITLE: REMOVAL PLAN

ISSUE DATE: JUNE 15, 2026

SHEET NUMBER: C-301

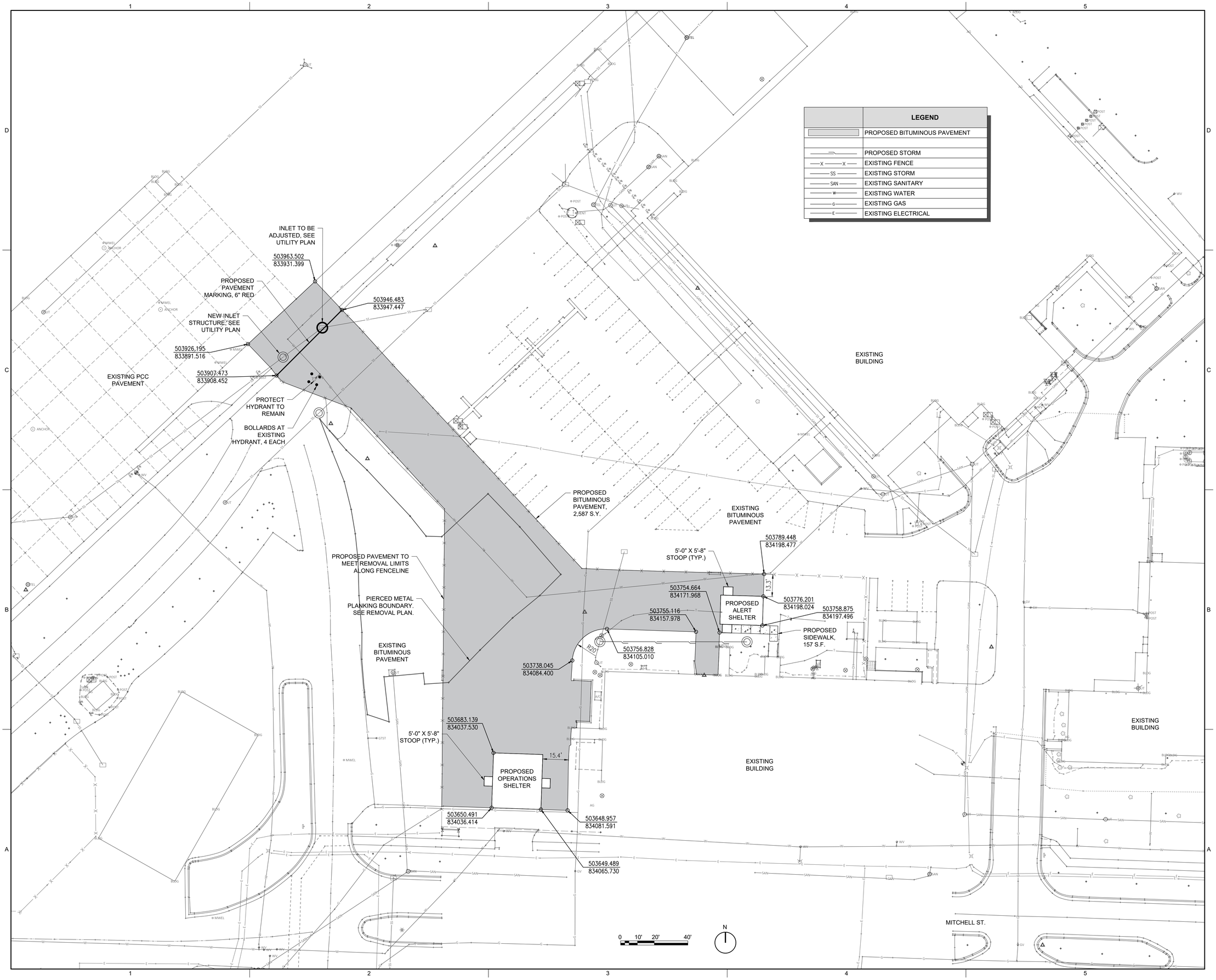

	LEGEND
	PROPOSED BITUMINOUS PAVEMENT
	PROPOSED STORM
X	EXISTING FENCE
SS	EXISTING STORM
SAN	EXISTING SANITARY
W	EXISTING WATER
G	EXISTING GAS
E	EXISTING ELECTRICAL

HANSON
Engineering | Planning | Allied Services

Offices Nationwide
www.hanson-inc.com

Hanson Professional Services Inc.
1525 S. 6th Street
Springfield, IL 62703
phone: 217-788-2450
fax: 217-788-2503

WISCONSIN
LINDSAY D. HAUSMAN
E-48143-6
SPRINGFIELD
ILLINOIS
PROFESSIONAL ENGINEER

115th FIGHTER WING

Construct Alert GOV Parking Shelters

Truax Field, Madison, Wisconsin

REVISION HISTORY:

	DESCRIPTION	DATE

PROJECT INFORMATION:

DESIGNED BY:	LDH
DRAWN BY:	LDH
REVIEWED BY:	LDH
PROJECT MANAGER:	NWC

PROJECT NUMBER: FSB2020-332-06

SHEET TITLE: PROPOSED PLAN

ISSUE DATE: JUNE 15, 2026

SHEET NUMBER: C-401

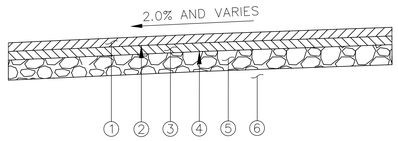

PAVEMENT SECTION - ASPHALT - LANDSIDE

1. PROPOSED 2" BITUMINOUS SURFACE COURSE
2. PROPOSED TACK COAT
3. PROPOSED 2" BITUMINOUS BASE COURSE
4. PROPOSED BITUMINOUS PRIME COAT
5. PROPOSED 12" AGGREGATE BASE COURSE
6. PROPOSED COMPACTED SUBGRADE OR FILL MATERIAL

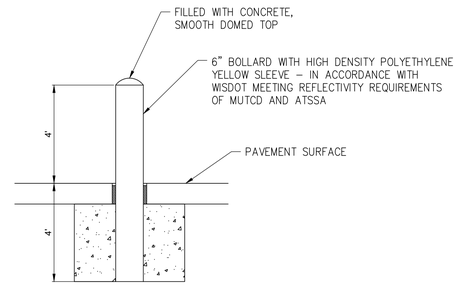

BOLLARD

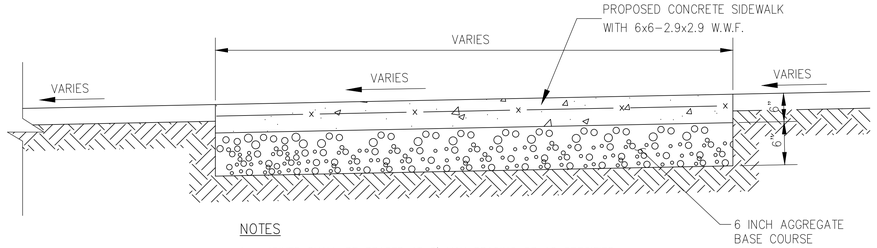

NOTES

1. JOINTS SHALL BE SPACED AT 6' MAX SPACING OR AS SPECIFIED.
2. JOINTS SHALL BE CONTRACTION JOINTS. EXPANSION JOINTS WITH 1/2" PREFORMED EXPANSION MATERIAL SHALL BE SPACED AT 36' MAX. INTERVALS.
3. 1/2" PREFORMED JOINT FILLER TO BE USED IN ALL LOCATIONS WHERE SIDEWALK IS ADJACENT TO EXISTING PAVEMENT.

SIDEWALK/STOOP CROSS SECTION DETAIL

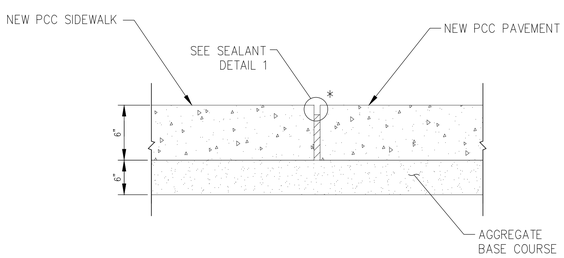

EXPANSION JOINT

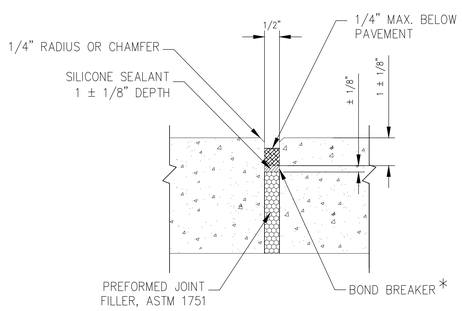

* POLYETHYLENE OR POLYESTER TAPE (3 MIL. MIN.) OR MARKING TAPE, RUBBER TAPE, 1/8" WIDER THAN WIDTH OF JOINT.

DETAIL 1 - SEALANT

HANSON
Engineering | Planning | Allied Services
Offices Nationwide
www.hanson-inc.com

Hanson Professional Services Inc.
1525 S. 6th Street
Springfield, IL 62703
phone: 217-788-2450
fax: 217-788-2503

WISCONSIN LINDSAY D. HAUSMAN E-48143-6 SPRINGFIELD ILLINOIS PROFESSIONAL ENGINEER

115th FIGHTER WING

Construct Alert GOV Parking Shelters

Truax Field, Madison, Wisconsin

REVISION HISTORY:

△	DESCRIPTION	DATE

PROJECT INFORMATION:

DESIGNED BY:	LDH
DRAWN BY:	HLE
REVIEWED BY:	LDH
PROJECT MANAGER:	NWC

PROJECT NUMBER: FSB2020-332-06

SHEET TITLE: TYPICAL SECTION AND PAVEMENT DETAILS

ISSUE DATE: JUNE 15, 2026

SHEET NUMBER: C-402

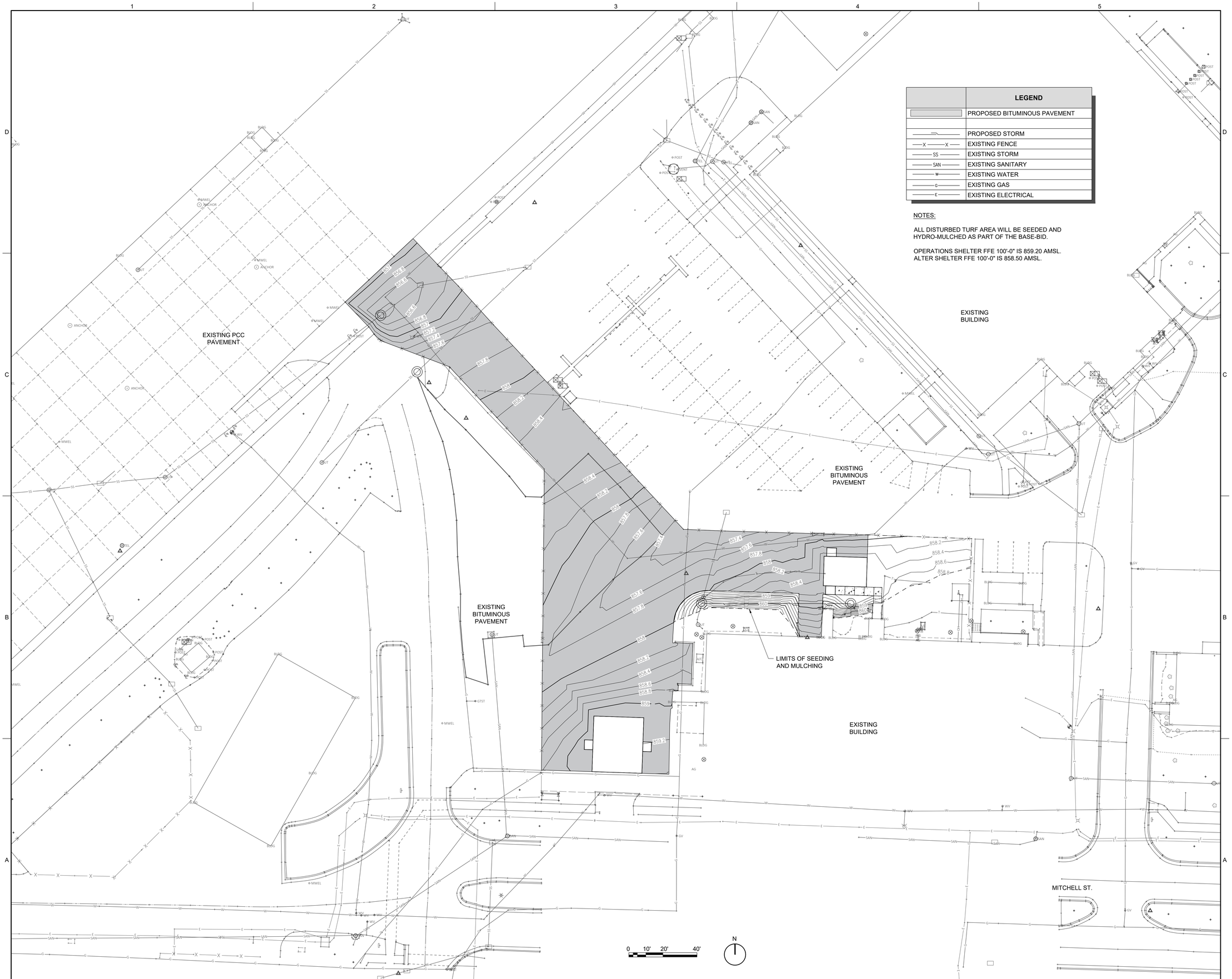

	LEGEND
	PROPOSED BITUMINOUS PAVEMENT
	PROPOSED STORM
—X—X—	EXISTING FENCE
—SS—	EXISTING STORM
—SAN—	EXISTING SANITARY
—W—	EXISTING WATER
—G—	EXISTING GAS
—E—	EXISTING ELECTRICAL

NOTES:

ALL DISTURBED TURF AREA WILL BE SEEDED AND HYDRO-MULCHED AS PART OF THE BASE-BID.

OPERATIONS SHELTER FFE 100'-0" IS 859.20 AMSL.
ALTER SHELTER FFE 100'-0" IS 858.50 AMSL.

HANSON
Engineering | Planning | Allied Services

Offices Nationwide
www.hanson-inc.com

Hanson Professional Services Inc.
1525 S. 6th Street
Springfield, IL 62703
phone: 217-788-2450
fax: 217-788-2503

WISCONSIN
LINDSAY D. HAUSMAN
E-48143-6
SPRINGFIELD ILLINOIS
PROFESSIONAL ENGINEER

115TH FIGHTER WING

Construct Alert GOV Parking Shelters

Truax Field, Madison, Wisconsin

REVISION HISTORY:

△	DESCRIPTION	DATE

PROJECT INFORMATION:

DESIGNED BY:	LDH
DRAWN BY:	LDH
REVIEWED BY:	LDH
PROJECT MANAGER:	NWC

PROJECT NUMBER: FSB2020-332-06

SHEET TITLE: GRADING PLAN

ISSUE DATE: JUNE 15, 2026

SHEET NUMBER: C-501

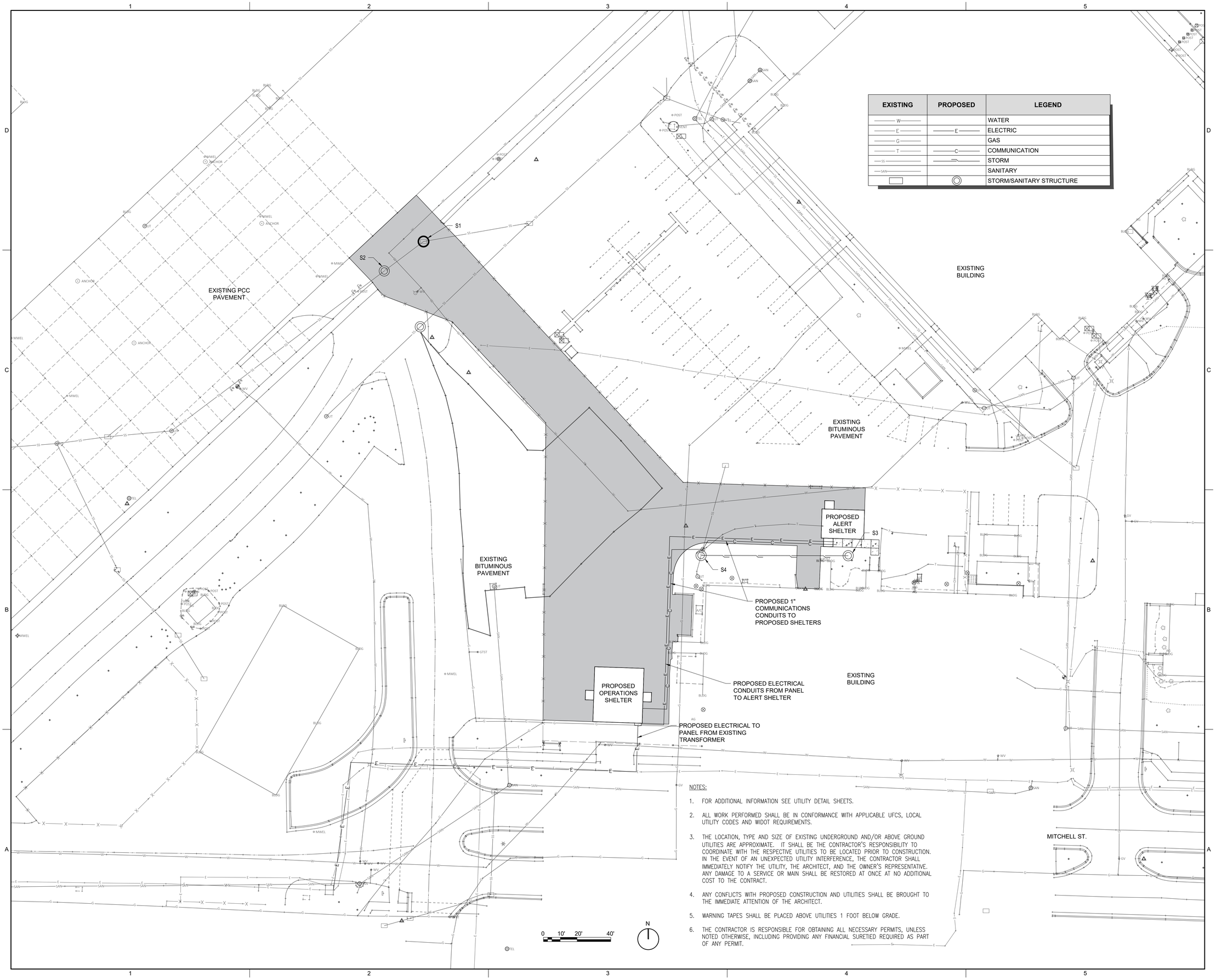

EXISTING	PROPOSED	LEGEND
W		WATER
E	E	ELECTRIC
G		GAS
T	C	COMMUNICATION
SS		STORM
SAN		SANITARY
		STORM/SANITARY STRUCTURE

NOTES:

1. FOR ADDITIONAL INFORMATION SEE UTILITY DETAIL SHEETS.
2. ALL WORK PERFORMED SHALL BE IN CONFORMANCE WITH APPLICABLE UFCS, LOCAL UTILITY CODES AND WIDOT REQUIREMENTS.
3. THE LOCATION, TYPE AND SIZE OF EXISTING UNDERGROUND AND/OR ABOVE GROUND UTILITIES ARE APPROXIMATE. IT SHALL BE THE CONTRACTOR'S RESPONSIBILITY TO COORDINATE WITH THE RESPECTIVE UTILITIES TO BE LOCATED PRIOR TO CONSTRUCTION. IN THE EVENT OF AN UNEXPECTED UTILITY INTERFERENCE, THE CONTRACTOR SHALL IMMEDIATELY NOTIFY THE UTILITY, THE ARCHITECT, AND THE OWNER'S REPRESENTATIVE. ANY DAMAGE TO A SERVICE OR MAIN SHALL BE RESTORED AT ONCE AT NO ADDITIONAL COST TO THE CONTRACT.
4. ANY CONFLICTS WITH PROPOSED CONSTRUCTION AND UTILITIES SHALL BE BROUGHT TO THE IMMEDIATE ATTENTION OF THE ARCHITECT.
5. WARNING TAPES SHALL BE PLACED ABOVE UTILITIES 1 FOOT BELOW GRADE.
6. THE CONTRACTOR IS RESPONSIBLE FOR OBTAINING ALL NECESSARY PERMITS, UNLESS NOTED OTHERWISE, INCLUDING PROVIDING ANY FINANCIAL SURETIED REQUIRED AS PART OF ANY PERMIT.

HANSON
Engineering | Planning | Allied Services

Offices Nationwide
www.hanson-inc.com

Hanson Professional Services Inc.
1525 S. 6th Street
Springfield, IL 62703
phone: 217-788-2450
fax: 217-788-2503

WISCONSIN
LINDSAY D. HAUSMAN
E-48143-6
SPRINGFIELD
ILLINOIS
PROFESSIONAL ENGINEER

115th FIGHTER WING

Construct Alert GOV Parking Shelters

Truax Field, Madison, Wisconsin

REVISION HISTORY:

△	DESCRIPTION	DATE

PROJECT INFORMATION:

DESIGNED BY:	LDH
DRAWN BY:	LDH
REVIEWED BY:	LDH
PROJECT MANAGER:	NWC

PROJECT NUMBER: FSB2020-332-06

SHEET TITLE: UTILITY PLAN

ISSUE DATE: JUNE 15, 2026

SHEET NUMBER: C-601

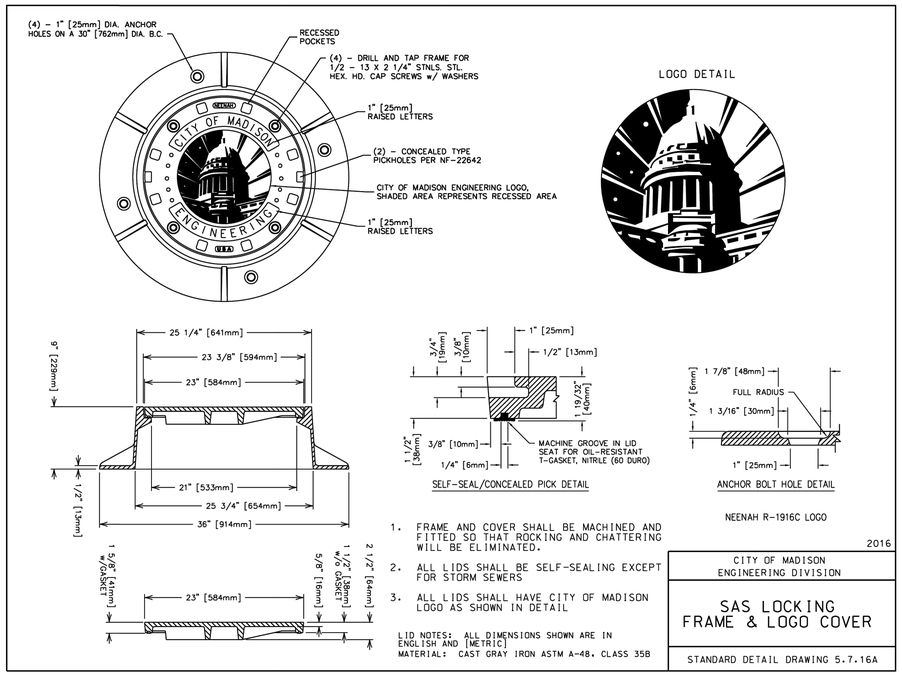

1. FRAME AND COVER SHALL BE MACHINED AND FITTED SO THAT ROCKING AND CHATTERING WILL BE ELIMINATED.
2. ALL LIDS SHALL BE SELF-SEALING EXCEPT FOR STORM SEWERS
3. ALL LIDS SHALL HAVE CITY OF MADISON LOGO AS SHOWN IN DETAIL

LID NOTES: ALL DIMENSIONS SHOWN ARE IN ENGLISH AND [METRIC]
MATERIAL: CAST GRAY IRON ASTM A-48, CLASS 35B

2016

CITY OF MADISON
ENGINEERING DIVISION

SAS LOCKING FRAME & LOGO COVER

STANDARD DETAIL DRAWING 5.7.16A

5.7.16A

NOTE: ALL STORM SEWER ACCESS STRUCTURES (S.A.S.) SHALL BE CONSTRUCTED IN COMPLIANCE WITH ASTM C478

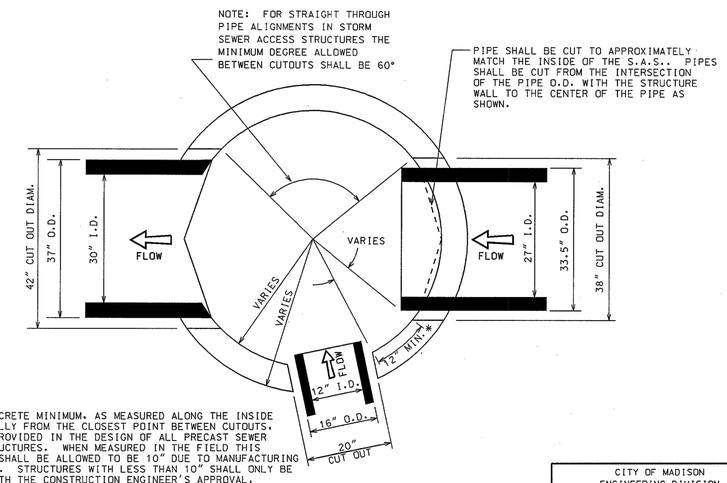

* 12" OF CONCRETE MINIMUM, AS MEASURED ALONG THE INSIDE WALL RADIALLY FROM THE CLOSEST POINT BETWEEN CUTOUTS, SHALL BE PROVIDED IN THE DESIGN OF ALL PRECAST SEWER ACCESS STRUCTURES. WHEN MEASURED IN THE FIELD THIS DIMENSION SHALL BE ALLOWED TO BE 10" DUE TO MANUFACTURING TOLERANCES. STRUCTURES WITH LESS THAN 10" SHALL ONLY BE ALLOWED WITH THE CONSTRUCTION ENGINEER'S APPROVAL.

** NOTE: PIPES SHOWN IN VARIOUS CONSTRUCTION STAGES FOR ILLUSTRATIVE PURPOSES.

2004

CITY OF MADISON
ENGINEERING DIVISION

STORM SEWER PRECAST SAS (TOP VIEW)

STANDARD DETAIL DRAWING 5.7.6

5.7.5

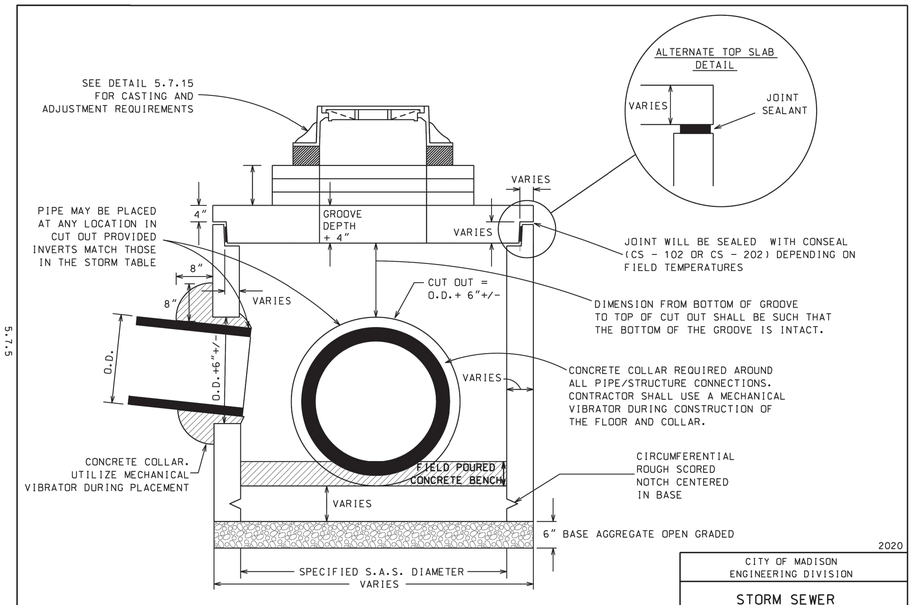

DESIGN DATA:
CONCRETE MASONRY: f'c= 4,000 PSI
STEEL REINFORCING: Fy= 60,000 PSI

GENERAL NOTES:
WALL, TOP SLAB, AND BASE SLAB THICKNESS AND REINFORCING SHALL BE DESIGNED BY PRECAST STRUCTURES MANUFACTURER.

2020

CITY OF MADISON
ENGINEERING DIVISION

STORM SEWER PRECAST SAS (THROUGH SECTION VIEW)

STANDARD DETAIL DRAWING 5.7.5

5.2.1A

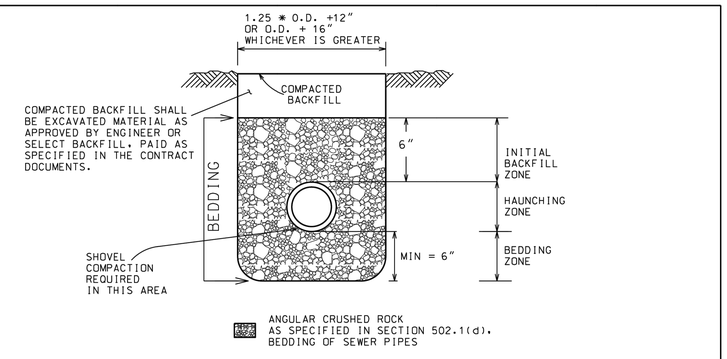

BEDDING FOR TYPE II, TYPE III, AND TYPE IV STORM PIPE, SECTION 1 OF S.D.D 5.2.2

NOTES:

THE COSTS OF BEDDING SHALL BE INCLUDED IN THE UNIT PRICES BID FOR THE PIPE.
THE BEDDING INCLUDES THE HAUNCHING, BEDDING & INITIAL BACKFILL ZONES.
THE BEDDING SHALL BE INSTALLED & COMPACTED IN 6" MAXIMUM LIFTS, AND SHOVEL COMPACTION UNDER THE HAUNCH OF PIPE IS REQUIRED.

ALL TRENCHES SHALL BE HAND BACKFILLED TO A POINT 12" ABOVE THE TOP OF THE PIPE. ALL BEDDING SHALL BE MECHANICALLY COMPACTED.

PAYMENT SHALL NOT BE MADE FOR BACKFILL WITH EXCAVATED MATERIAL, IF APPROVED. SELECT FILL, IF REQUIRED, SHALL BE PAID PER CONTRACT.

THE MAXIMUM ALLOWABLE TRENCH WIDTH SHALL BE THE MIN SPECIFIED PLUS 12", AND SHALL APPLY FROM THE BOTTOM OF THE TRENCH TO A POINT 12" ABOVE THE TOP OF THE PIPE. WHERE THIS WIDTH IS EXCEEDED, THE CONTRACTOR SHALL FURNISH AND INSTALL A HIGHER TYPE OF BEDDING AT NO EXTRA COST. THE TYPE OF BEDDING SHALL BE DETERMINED BY THE ENGINEER.

O.D. EQUALS THE OUTSIDE DIAMETER OF THE PIPE.

DRAWING NOT TO SCALE

2017

CITY OF MADISON
ENGINEERING DIVISION

STORM PIPE BEDDING AND BACKFILL– SECTION 1 OF S.D.D.5.2.2

STANDARD DETAIL DRAWING 5.2.1A

STORM SEWER SCHEDULE

PROPOSED STRUCTURE	NORTHING	EASTING	TYPE	RIM ELEV. (FT)	INVERT ELEV. (FT)	PIPE PAY LENGTH (FT)	SIZE (IN)	TYPE	SLOPE (%)
S2	503918.4337	833912.3693	Inlet Over Existing 12" Pipe	856.30	852.21				
S3	503749.1336	834188.3100	Inlet	858.20	855.00				
						87.5	12	RCP	0.5
S4	503749.3041	834100.8009	Inlet Over Existing 12" Pipe	859.17	854.57				

MANHOLE ADJUSTMENT SCHEDULE

EXISTING STRUCTURE	NORTHING	EASTING	TYPE	EXISTING RIM ELEV. (FT)	PROPOSED RIM ELEV. (FT)	ADJUSTMENT (IN)	DESCRIPTION
S1	503935.9550	833935.6970	STORM	856.54	856.58	0.48	MODIFY TO SOLID LID

HANSON
Engineering | Planning | Allied Services
Offices Nationwide
www.hanson-inc.com

Hanson Professional Services Inc.
1525 S. 6th Street
Springfield, IL 62703
phone: 217-788-2450
fax: 217-788-2503

WISCONSIN LINDSAY D. HAUSMAN E-48143-6 SPRINGFIELD ILLINOIS PROFESSIONAL ENGINEER

115th FIGHTER WING

Construct Alert GOV Parking Shelters

Truax Field, Madison, Wisconsin

REVISION HISTORY:

△	DESCRIPTION	DATE

PROJECT INFORMATION:

DESIGNED BY: LDH
DRAWN BY: LDH
REVIEWED BY: LDH
PROJECT MANAGER: NWC

PROJECT NUMBER: FSB2020-332-06

SHEET TITLE: DRAINAGE SCHEDULES AND DETAILS

ISSUE DATE: JUNE 15, 2026

SHEET NUMBER: C-602

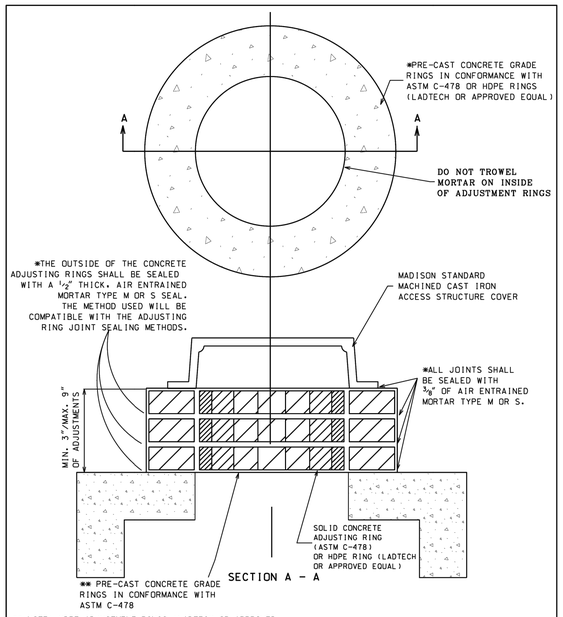

**** NOTE: HDPE ADJUSTMENT RINGS (LADTECH OR APPROVED EQUAL) MEETING AASHTO M525 SPECS. ASTM D-1248 INSTALLED IN ACCORDANCE WITH MANUFACTURER'S RECOMMENDATIONS WILL BE CONSIDERED AN ACCEPTABLE ALTERNATE TO PRECAST RINGS. IF PRO-RINGS ARE INSTALLED FOR THE WHOLE ADJUSTMENT, CONTRACTOR WILL BE PAID FOR AN INTERNAL CHIMNEY SEAL. PRO-RING ADJUSTMENT IS CONSIDERED TO BE EQUIVALENT OF AN INTERNAL CHIMNEY SEAL. PRO-RING SHALL HAVE M-1 ADHESIVE BETWEEN RINGS. CRETEX PRO RING WILL BE CONSIDERED AN ACCEPTED ALTERNATE FOR PRECAST RINGS.
RING JOINT SEALANT SHALL BE ASTM C990 AND AASHTO M-198 (TROWLABLE EZ-STICK #3 OR EQUAL)

2019
CITY OF MADISON
ENGINEERING DIVISION
SAS CHIMNEY AND CASTING
STANDARD DETAIL DRAWING 5.7.15

5.7.15

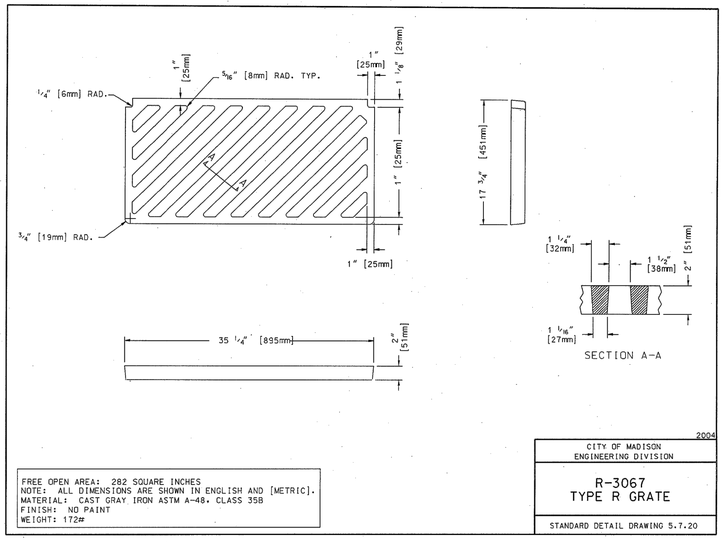

FREE OPEN AREA: 282 SQUARE INCHES
NOTE: ALL DIMENSIONS ARE SHOWN IN ENGLISH AND [METRIC].
MATERIAL: CAST GRAY IRON ASTM A-48, CLASS 35B
FINISH: NO PAINT
WEIGHT: 172#

2004
CITY OF MADISON
ENGINEERING DIVISION
R-3067
TYPE R GRATE
STANDARD DETAIL DRAWING 5.7.20

5.7.20

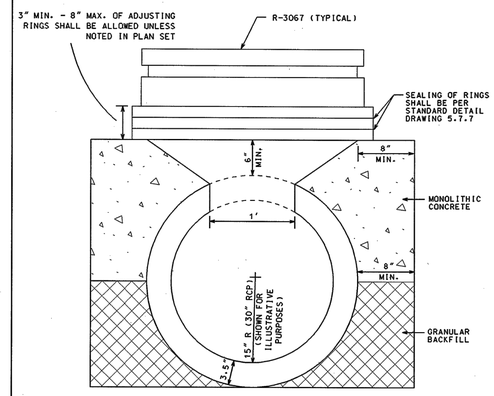

TO BE USED ON PIPES OR BOXES WHERE THE O.D. OF THE THROUGH PIPE IS LESS THAN OR EQUAL TO 4'-4".

2004
CITY OF MADISON
ENGINEERING DIVISION
MADISON STANDARD SADDLED INLET TYPE I
STANDARD DETAIL DRAWING 5.7.8

5.7.8

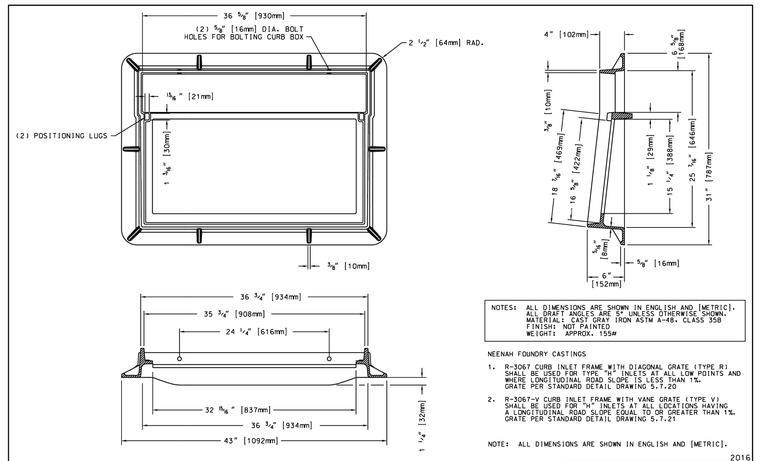

NOTES: ALL DIMENSIONS ARE SHOWN IN ENGLISH AND [METRIC].
ALL DRAFT ANGLES ARE 5° UNLESS OTHERWISE SHOWN.
MATERIAL: CAST GRAY IRON ASTM A-48, CLASS 35B
FINISH: NOT PAINTED
WEIGHT: APPROX. 155#

NEENAH FOUNDRY CASTINGS

1. R-3067 CURB INLET FRAME WITH DIAGONAL GRATE (TYPE R) SHALL BE USED FOR TYPE "H" INLETS AT ALL LOW POINTS AND WHERE LONGITUDINAL ROAD SLOPE IS LESS THAN 1%. GRATE PER STANDARD DETAIL DRAWING 5.7.20
2. R-3067-V CURB INLET FRAME WITH VANE GRATE (TYPE V) SHALL BE USED FOR "H" INLETS AT ALL LOCATIONS HAVING A LONGITUDINAL ROAD SLOPE EQUAL TO OR GREATER THAN 1%. GRATE PER STANDARD DETAIL DRAWING 5.7.21

NOTE: ALL DIMENSIONS ARE SHOWN IN ENGLISH AND [METRIC].

GENERAL NOTES:

1. DETAILS OF CONSTRUCTION, MATERIALS, AND WORKMANSHIP NOT SHOWN ON THIS DRAWING SHALL CONFORM TO THE PERTINENT REQUIREMENTS OF THE STANDARD SPECIFICATIONS AND THE APPLICABLE SPECIAL PROVISIONS.
2. DETAIL DRAWINGS FOR PROPOSED ALTERNATE DESIGNS FOR INLET COVERS SHALL BE SUBMITTED TO THE ENGINEER FOR APPROVAL PROVIDING THAT SUCH ALTERNATE DESIGNS MAKE PROVISION FOR EQUIVALENT CAPACITY AND STRENGTH.
3. ROUND FRAMES AND COVERS SHALL HAVE CONTINUOUSLY MACHINED BALL BEARING SURFACES TO PREVENT ROCKING AND RATTLING.
4. ACTUAL WEIGHT OF COVERS MAY VERY WITHIN 5 PERCENT(PLUS OR MINUS) OF THE APPROXIMATE WEIGHT.
5. INLETS SHALL BE DEPRESSED IN THE CURB FLOW LINE. SEE MADISON STANDARD DETAIL DRAWING 5.7.7

2016
CITY OF MADISON
ENGINEERING DIVISION
R-3067
FRAME
STANDARD DETAIL DRAWING 5.7.18

5.7.18

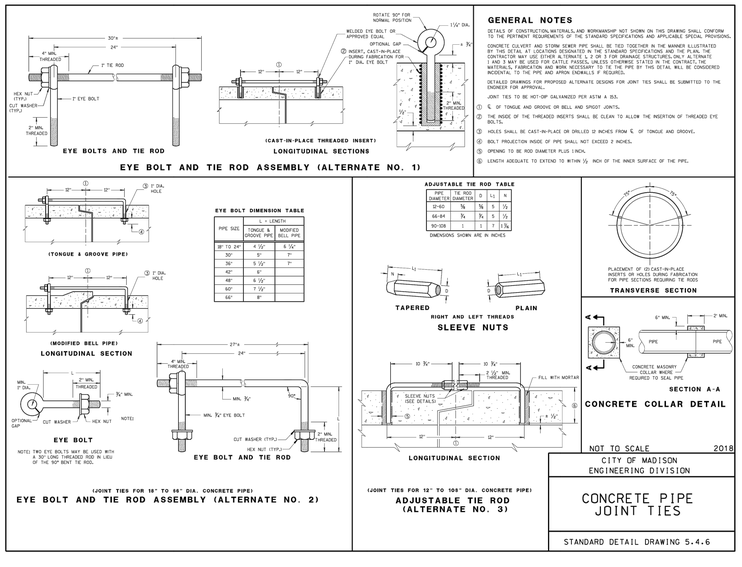

GENERAL NOTES

DETAILS OF CONSTRUCTION, MATERIALS, AND WORKMANSHIP NOT SHOWN ON THIS DRAWING SHALL CONFORM TO THE PERTINENT REQUIREMENTS OF THE STANDARD SPECIFICATIONS AND APPLICABLE SPECIAL PROVISIONS.

CONCRETE CULVERT AND STORM SEWER PIPE SHALL BE TIED TOGETHER IN THE MANNER ILLUSTRATED ON THIS DRAWING. THE CONTRACTOR MAY USE OTHER ALTERNATE 1 OR 2 FOR DRAINAGE STRUCTURES. THE CONTRACTOR MAY USE OTHER ALTERNATE 1, 2 OR 3 FOR DRAINAGE STRUCTURES. ONLY ALTERNATE 1 AND 3 MAY BE USED FOR CATTLE PASSES, UNLESS OTHERWISE STATED IN THE CONTRACT. THE MATERIALS, FABRICATION AND WORK NECESSARY TO TIE THE PIPE BY THIS DETAIL WILL BE CONSIDERED INCIDENTAL TO THE PIPE AND APRON ENDWALLS IF REQUIRED.

DETAILED DRAWINGS FOR PROPOSED ALTERNATE DESIGNS FOR JOINT TIES SHALL BE SUBMITTED TO THE ENGINEER FOR APPROVAL.

JOINT TIES TO BE HOT-DIP GALVANIZED PER ASTM A 153.

1. ℄ OF TONGUE AND GROOVE OR BELL AND SPIGOT JOINTS.
2. THE INSIDE OF THE THREADED INSERTS SHALL BE CLEAN TO ALLOW THE INSERTION OF THREADED EYE BOLTS.
3. HOLES SHALL BE CAST-IN-PLACE OR DRILLED 12 INCHES FROM ℄ OF TONGUE AND GROOVE.
4. BOLT PROJECTION INSIDE OF PIPE SHALL NOT EXCEED 2 INCHES.
5. OPENING TO BE ROD DIAMETER PLUS 1/8IN.
6. LENGTH ADEQUATE TO EXTEND TO WITHIN 1/2 INCH OF THE INNER SURFACE OF THE PIPE.

EYE BOLT DIMENSION TABLE

PIPE SIZE	L = LENGTH	
	TONGUE & GROOVE PIPE	MODIFIED BELL PIPE
18" TO 24"	4 1/2"	6 1/2"
30"	5"	7"
36"	5 1/2"	7"
42"	6"	
48"	6 1/2"	
60"	7 1/2"	
66"	8"	

ADJUSTABLE TIE ROD TABLE

PIPE DIAMETER	TIE ROD DIAMETER	A	L1	L
12-42	3/4	3/4	5	1/2
66-84	7/8	7/8	5	1/2
90-108	1	1	7	1 1/8

DIMENSIONS SHOWN ARE IN INCHES.

NOT TO SCALE 2018
CITY OF MADISON
ENGINEERING DIVISION
CONCRETE PIPE JOINT TIES
STANDARD DETAIL DRAWING 5.4.6

5.4.6

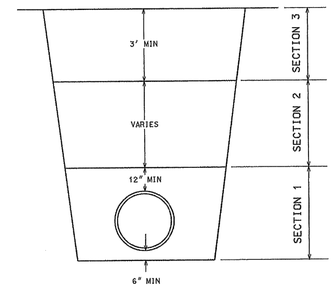

TYPICAL TRENCH COMPACTION

ALL BACKFILL MATERIAL SHALL BE PLACED IN LIFTS NOT TO EXCEED 12" BEFORE COMPACTION UNLESS AUTHORIZED BY THE ENGINEER DUE TO THE CHARACTER OF THE MATERIAL AND THE COMPACTING EQUIPMENT. EACH LIFT SHALL BE MECHANICALLY COMPACTED TO THE REQUIRED DENSITY PRIOR TO PLACING SUCCEEDING LIFTS OF BACKFILL MATERIAL.

IN COLD WEATHER, TRENCHES SHALL BE COMPACTED IN ACCORDANCE WITH THE REQUIREMENTS SPECIFIED IN SECTION 502.1 (e), BACKFILLING EXCAVATIONS AND COMPACTION OF BACKFILL, OF THESE SPECIFICATIONS.

SECTION 1:

MECHANICALLY COMPACTED BEDDING AS REQUIRED BY THE SPECIFICATIONS. COMPACTION ACHIEVED WITH SMALLER PLATE COMPACTOR.
FOR ALL PLASTIC PIPE SECTION 1 SHALL BE INSTALLED IN ACCORDANCE WITH S.D.D. 5.2.1A

SECTION 2:

MINIMUM COMPACTION OF 90% MAXIMUM DENSITY. COMPACTION OF BACKFILL WITH BOMAG OR MOE-PAC SHALL NOT BEGIN UNTIL THE DEPTH OF BACKFILL MATERIAL IS TWO FEET ABOVE THE TOP OF PIPE.

SECTION 3:

MINIMUM COMPACTION OF 95% MAXIMUM DENSITY.

2011
CITY OF MADISON
ENGINEERING DIVISION
TYPICAL TRENCH COMPACTION
STANDARD DETAIL DRAWING 5.2.2

5.2.2

HANSON
Engineering | Planning | Allied Services
Offices Nationwide
www.hanson-inc.com

Hanson Professional Services Inc.
1525 S. 6th Street
Springfield, IL 62703
phone: 217-788-2450
fax: 217-788-2503

WISCONSIN LINDSAY D. HAUSMAN E-48143-6 SPRINGFIELD ILLINOIS PROFESSIONAL ENGINEER

115th FIGHTER WING

Construct Alert GOV Parking Shelters

Truax Field, Madison, Wisconsin

REVISION HISTORY:

	DESCRIPTION	DATE

PROJECT INFORMATION:

DESIGNED BY: LDH
DRAWN BY: LDH
REVIEWED BY: LDH
PROJECT MANAGER: NWC

PROJECT NUMBER: FSB2020-332-06

SHEET TITLE: DRAINAGE DETAILS

ISSUE DATE: JUNE 15, 2026

SHEET NUMBER: C-603

ABBREVIATIONS

ACI	AMERICAN CONCRETE INSTITUTE
ADD'L	ADDITIONAL
AISC	AMERICAN INSTITUTE OF STEEL CONSTRUCTION
ANCH	ANCHOR
AR	ANCHOR ROD
ARCH	ARCHITECTURAL
ASCE	AMERICAN SOCIETY OF CIVIL ENGINEERS
ASD	ALLOWABLE STRESS DESIGN
ASTM	AMERICAN SOCIETY FOR TESTING AND MATERIALS
AT/FP	ANTI-TERRORISM FORCE PROTECTION
AWS	AMERICAN WELDING SOCIETY
BM	BEAM
BO	BOTTOM OF
BOS	BOTTOM OF STEEL
BOT	BOTTOM
BP	BASE PLATE
BR	BRACING
BRG	BEARING
BTWN	BETWEEN
CJ	CONSTRUCTION JOINT
℄	CENTER LINE
CL	CENTER LINE
CL	COLLATERAL LOAD
CLR	CLEAR
CMU	CONCRETE MASONRY UNIT
COL	COLUMN
CONC	CONCRETE
CONNX	CONNECTION
CONT	CONTINUOUS
COORD	COORDINATE
CR	CENTER OF RADIUS
DBA	DEFORMED BAR ANCHOR
DBE	DECK BEARING ELEVATION
DEG	DEGREE
db	DIAMETER BAR
DIA	DIAMETER
DL	DEAD LOAD
DN	DOWN
DWLS	DOWELS
EA	EACH
EE	EACH END
EF	EACH FACE
EJ	EXPANSION JOINT
EL	ELEVATION
ELEV	ELEVATION
EQ	EQUAL
EQUIV	EQUIVALENT
EW	EACH WAY
EXP	EXPANSION
°F/C	DEGREES FAHRENHEIT/CELSIUS
FF	FINISH FLOOR
FFE	FINISHED FLOOR ELEVATION
FIN	FINISH
FLR	FLOOR
FLG	FLANGE
FND	FOUNDATION
FT	FOOT/FEET
FTG	FOOTING
FS	FAR SIDE
GA	GAGE
GALV	GALVANIZED
GB	GRADE BEAM
HORIZ	HORIZONTAL
IBC	INTERNATIONAL BUILDING CODE
IN	INCH/INCHES
JB	JOIST BEARING
JST	JOIST
JT	JOINT
LBS	POUNDS
LL	LIVE LOAD
LLH	LONG LEG HORIZONTAL
LLV	LONG LEG VERTICAL
LONG	LONGITUDINAL
LRFD	LOAD AND RESISTANCE FACTOR DESIGN
LSH	LONG SIDE HORIZONTAL
LSSH	LONG SLOTTED HOLES
MBM	METAL BUILDING MANUFACTURER
MFR	MANUFACTURER
MAT'L	MATERIAL
MAX	MAXIMUM
MECH	MECHANICAL
MFG	MANUFACTURER
MIN	MINIMUM
MPH	MILES PER HOUR
NS	NEAR SIDE
NTS	NOT TO SCALE
OC	ON CENTER
OH	OPPOSITE HAND
OPNG	OPENING
OVS	OVERSIZED
PERIM	PERIMETER
PL	PLATE
±	PLUS/MINUS
PSF	POUNDS PER SQUARE FOOT
PSI	POUNDS PER SQUARE INCH
PT	POINT
REF	REFER
REINF	REINFORCE/REINFORCING
REQ'D	REQUIRED
SCHED	SCHEDULE
SDI	STEEL DECK INSTITUTE
SF	SQUARE FEET
SIM	SIMILAR
SJ	SAWCUT JOINT
SJI	STEEL JOIST INSTITUTE
SL	SNOW LOAD
SSLT	SHORT SLOTTED HOLES
SSMA	STEEL STUD MANUFACTURERS ASSOCIATION
STD	STANDARD
STIFF	STIFFENER
TO	TOP OF
TOF	TOP OF FOUNDATION/FOOTING
TOS	TOP OF STEEL
TYP	TYPICAL
UNO	UNLESS NOTED OTHERWISE
VERT	VERTICAL
W/	WITH
W/O	WITHOUT
WL	WIND LOAD
WP	WORKING POINT
WWF	WELDED WIRE FABRIC
WWR	WELDED WIRE REINFORCEMENT

DESIGN CRITERIA:

GOVERNING BUILDING CODE: IBC 2018

BUILDING RISK CATEGORY: II

DESIGN LOADS:

DEAD LOADS:	
ROOF SYSTEM	20 PSF SUPERIMPOSED
FRAMING	ACTUAL WEIGHT OF MATERIALS, UNLESS NOTED OTHERWISE
INSULATION	9 PSF
CEILING COLLATERAL	3 PSF
MISC/MECH COLLATERAL	5 PSF
LIVE LOADS:	
ROOF (NON-REDUCIBLE)	20 PSF
ALL OTHER FLOORS	80 PSF
CONCENTRATED POINT LOADS	
SLAB ON GRADE (6"X6")	20,000 LBS
SNOW LOAD: (ASCE 7-22)	
BASIC GROUND SNOW LOAD, (Pg)	54 PSF
TERRAIN CATEGORY	C
ROOF EXPOSURE	PARTIAL
EXPOSURE FACTOR, (Ce)	1.0
THERMAL FACTOR, (Ct)	1.0
SLOPE FACTOR, (Cs)	1.0
IMPORTANCE FACTOR, (Is)	1.0
SLOPED ROOF SNOW, (Ps)	45.4 PSF
WIND LOAD: (ASCE 7-22)	
BUILDING DESIGN:	
BASIC WIND SPEED	107 MPH
EXPOSURE CATEGORY	C
TOPOGRAPHIC FACTOR, (Kzt)	1.0
BUILDING ENCLOSURE CA	PARTIALLY ENCLOSED BUILDING
SEISMIC DESIGN DATA: (ASCE 7-22)	
SHORT PERIOD ACCELERATION, Ss	0.09 g
LONG PERIOD ACCELERATION, S1	0.054 g
SOIL SITE CLASS	D
SITE COEFFICIENT, Fa	1.6
SITE COEFFICIENT, Fv	2.4
DESIGN SPECTRAL ACCELERATION, SDs	0.085 g
DESIGN SPECTRAL ACCELERATION, SD1	0.078 g
SEISMIC DESIGN CATEGORY	B
ANALYSIS METHOD	EQUIVALENT LATERAL FORCE
SEISMIC FORCE RESISTING SYSTEM	STEEL SYSTEMS NOT SPECIFICALLY DETAILED FOR SEISMIC RESISTANCE

R=3.0, Ω=3.0, Cd=3.0, I=1.25, Cs=0.066

TEMPERATURE:
STRUCTURE SHALL BE ANALYZED FOR T = +37,-53 °F (90 °F TOTAL ΔT)

MATERIAL DESIGN VALUES:

CONCRETE (MINIMUM ULTIMATE COMPRESSIVE STRENGTH AT 28 DAYS, NORMAL WEIGHT, UNLESS NOTED OTHERWISE)

SLABS ON GRADE AND FOUNDATIONS	4,000 PSI
ALL OTHER STRUCTURAL CONCRETE, U.N.O.	5,000 PSI

CONCRETE REINFORCEMENT(MINIMUM YIELD STRENGTH)

ALL DEFORMED BARS, UNLESS NOTED OTHERWISE. (ASTM A615, GRADE 60)	F_y = 60,000 PSI
WELDED WIRE FABRIC (ASTM A185)	F_y = 60,000 PSI
SMOOTH BARS (ASTM A82)	F_y = 70,000 PSI
DEFORMED BAR ANCHORS (ASTM A706)	F_y = 60,000 PSI

STRUCTURAL STEEL (MINIMUM YIELD STRENGTH)

WIDE FLANGES (ASTM A992 OR A572, GR. 50)	F_y = 50,000 PSI
HSS ROUND (ASTM A500, GRADE C)	F_y = 46,000 PSI
HSS SQUARE (ASTM A500, GRADE C)	F_y = 50,000 PSI
PIPES (ASTM A53, GRADE B)	F_y = 35,000 PSI
ALL OTHER SHAPES, PLATES AND ANCHOR BOLTS UNLESS NOTED OTHERWISE (ASTM A36)	F_y = 36,000 PSI
ANCHOR RODS (ASTM F 1554, WELDABLE GRADE 55)	F_y = 55,000 PSI
COLD FORMED STRUCTURAL SHAPES	F_y = 50,000 PSI (MIN)

MISCELLANEOUS NOTES:

1. REFERENCE DATUM ELEVATION 100'-0" IS EQUAL TO THE ACTUAL FINISH FLOOR ELEVATION PROVIDED BY CIVIL. REFERENCED ELEVATIONS ARE BASED ON THIS DATUM ELEVATION.
2. GENERAL NOTES AND TYPICAL DETAILS APPLY TO THE ENTIRE PROJECT AND CONVEY ENGINEERING INTENT. SPECIFIC DETAILS ARE NOT DRAWN FOR EVERY CONDITION OF CONSTRUCTION OR ASSEMBLY. MANY CONDITIONS SIMILAR TO THOSE DEPICTED EXIST AND THOSE SIMILAR CONDITIONS ARE INCLUDED IN THE CONTRACT SCOPE OF WORK. THE CONTRACTOR SHALL INCLUDE COST OF THE WORK FOR THESE SIMILAR CONDITIONS. FUTURE CLARIFICATION OF DETAILS SHALL NOT BE THE BASIS OF ADDITIONAL COMPENSATION FOR THE CONTRACTOR.

CONSTRUCTION NOTES:

1. ALL DIMENSIONS TO EXISTING STRUCTURES MUST BE VERIFIED IN THE FIELD AS REQUIRED FOR NEW CONSTRUCTION.
2. ALL INTERFERING PIPES, UTILITIES, AND FIXTURES WILL BE RELOCATED BY CONTRACTOR AS REQUIRED.
3. THE CONTRACTOR SHALL PROVIDE AND INSTALL ALL SHORING, PROPS, AND GUYS REQUIRED FOR THE TEMPORARY SUPPORT OF THE EXISTING STRUCTURE AND REMOVE SAME AFTER COMPLETION.
4. THE CONTRACTOR IS HELD RESPONSIBLE FOR PROTECTION OF PERSONNEL AND EQUIPMENT DURING THE COURSE OF OPERATIONS ACCORDING TO CURRENT SAFETY REGULATIONS.
5. THE CONTRACTOR SHALL SUBMIT TO THE ENGINEER COPIES OF ALL SHOP DRAWINGS OF NEW WORK FOR APPROVAL.
6. THE CONTRACTOR SHALL REPAIR ALL EXISTING WORK WHICH HAS BEEN DAMAGED BY HIS CONSTRUCTION OPERATIONS AND REMOVE ALL DEBRIS FROM THE SITE AFTER COMPLETION OF THE PROJECT.

SOILS/FOUNDATION NOTES:

1. FOUNDATION DESIGN IS BASED ON THE FOUNDATION RECOMMENDATIONS OF B401, NEARBY.
2. THE ALLOWABLE SOIL BEARING PRESSURE FOR SHALLOW FOOTINGS SHALL BE 2,000 PSI AND BEAR AT LEAST 60 INCHES BELOW FINAL GRADE FOR FROST PROTECTION (FOR AN UNHEATED STRUCTURE) AND SHALL HAVE A MINIMUM WIDTH OF 18 INCHES FOR CONTINUOUS FOOTINGS AND 24 INCHES FOR SPREAD FOOTINGS.
3. FLOOR SLABS SHALL BE CONSTRUCTED ON COMPACTED MINIMUM 6 INCH THICK DRAINABLE GRANULAR FILL PLACED ON TOP OF PROPERLY PREPARED BEDROCK OR STRUCTURAL FILL, AS APPLICABLE.
4. AFTER EXCAVATING, FOOTINGS SHOULD BE INSPECTED AND CONCRETE PLACED AS QUICKLY AS POSSIBLE TO AVOID EXPOSURE TO WETTING AND DRYING.
5. WATER SHOULD NOT BE ALLOWED TO COLLECT IN THE EXCAVATIONS OR NEAR THE FOUNDATIONS AND FLOOR SLAB AREAS OF THE BUILDINGS DURING CONSTRUCTION.
6. ALL VEGETATION, TOPSOIL, SOFT OR LOOSE SOIL, CONCRETE, ASPHALT, OLD FOUNDATIONS AND DELETERIOUS MATERIALS SHALL BE STRIPPED FROM THE BUILDING SITE. STRIPPING AND UNDERCUTTING SHALL EXTEND A MINIMUM OF 5 FEET BEYOND THE BUILDING PERIMETER AND THE DEPTH SHALL BE AS DETERMINED BY THE GEOTECHNICAL ENGINEER.
7. AFTER STRIPPING THE SITE BUT PRIOR TO PLACING FILL THE SITE SHALL BE PROOF ROLLED WITH A TANDEM AXLE DUMP TRUCK (9 TONS/AXLE) OR SIMILAR RUBBER TIRED VEHICLE. SOILS THAT RUT OR DEFLECT EXCESSIVELY (GREATER THAN 1 INCH) SHALL BE UNDERCUT AND RECOMPACTED IN PLACE OR REPLACED WITH PROPERLY COMPACTED STRUCTURAL FILL. THE RECOMPACTED SOIL OR ENGINEERED FILL SHALL BE MOISTURE CONDITIONED DURING PLACEMENT.
8. AFTER PROOF ROLLING, THE SUBGRADE SOILS SHALL BE SCARIFIED TO A DEPTH OF 8 INCHES, MOISTURE CONTENT ADJUSTED TO WITHIN 2 PERCENT ABOVE THE OPTIMUM MOISTURE CONTENT, AND COMPACTED TO 95 PERCENT OF THE STANDARD PROCTOR MAXIMUM DRY DENSITY AS DEFINED BY ASTM D698.
9. AFTER INSPECTION OF THE SUBGRADE, STRUCTURAL FILL MATERIAL SHALL BE PLACED IN LIFTS NOT EXCEEDING 8 INCHES. EACH LIFT OF STRUCTURAL FILL MATERIAL SHALL HAVE THE MOISTURE CONTENT ADJUSTED TO WITHIN 3 PERCENT ABOVE THE OPTIMUM MOISTURE CONTENT, AND COMPACTED TO 98 PERCENT OF THE STANDARD PROCTOR MAXIMUM DRY DENSITY AS DETERMINED BY ASTM DESIGNATION D698.

   BACKFILL ALL TRENCHES AND EXCAVATIONS THAT UNDERMINE OR ENCROACH ON FOUNDATIONS BEARING ON / IN SHALE PER NOTE 9.

CONCRETE CONSTRUCTION NOTES:

1. ALL DETAILING, FABRICATION AND PLACING OF REINFORCING BARS, UNLESS NOTED OTHERWISE, SHALL FOLLOW THE LATEST EDITION ACI DETAILING MANUAL, DETAILS AND DETAILING OF CONCRETE REINFORCEMENT, ACI MANUAL OF ENGINEERING AND PLACING DRAWINGS FOR REINFORCED CONCRETE STRUCTURES, ACI SPECIFICATIONS FOR STRUCTURAL CONCRETE FOR BUILDINGS AND THE PROVISIONS OF ACI "BUILDING CODE REQUIREMENTS FOR REINFORCED CONCRETE" (ACI 318-APPLICABLE EDITION).
2. UNLESS NOTED OTHERWISE, LAP SPLICES OR EMBEDMENT LENGTHS SHALL CONFORM TO ACI REQUIREMENTS FOR CLASS B SPLICES. REFER TO REINFORCEMENT LAP LENGTH SCHEDULE.
3. UNLESS NOTED OTHERWISE, CONCRETE COVER OVER STEEL REINFORCEMENT SHALL CONFORM TO MINIMUM REQUIRED BY ACI 318-APPLICABLE EDITION.
4. AT INTERSECTING FOUNDATIONS AND WALLS EXTEND ALL HORIZONTAL REINFORCING OF THE INTERSECTING MEMBER BEYOND THE POINT OF INTERSECTION TO THE OPPOSITE FACE AND BEND TO A STANDARD 90 DEGREE HOOK, OR PROVIDE BENT DOWELS OF EQUAL SIZE AND SPACING AND LAP AS REQUIRED BY NOTE 2 (BUT NOT LESS THAN 24") IN EACH DIRECTION. REFER TO TYPICAL CONCRETE PLAN DETAIL.
5. PROVIDE CORNER BARS IN BOTH FACES OF ALL EXTERIOR BEAMS AND WALLS. NUMBER, SIZE AND SPACING OF CORNER BARS SHALL BE EQUAL TO NUMBER, SIZE AND SPACING OF HORIZONTAL REINFORCING WITH WHICH THEY LAP AND SHALL EXTEND 40 BAR DIAMETERS IN EACH DIRECTION. IF REINFORCING MEETING AT THE CORNER IS OF DIFFERENT SIZE, CORNER BAR SHALL MATCH THE LARGER OF THE BARS. BOTH LEGS OF CORNER BARS SHALL BE EQUAL LENGTH. REFER TO CONCRETE PLAN DETAIL.
6. ALL REINFORCING SHALL BE SUPPORTED FROM THE INTERIOR OF THE CONCRETE ELEMENTS. PROVIDE ALL STANDS REQUIRED TO ADEQUATELY HOLD REINFORCEMENT IN PLACE DURING CONCRETE PLACEMENT.
7. PROVIDE SLEEVES IN BEAMS, SLABS AND WALLS FOR ALL PENETRATIONS (DO NOT DRILL). LOCATIONS MUST BE APPROVED BY ARCHITECT-ENGINEER. PIPE PENETRATIONS THROUGH GRADE BEAMS SHALL NOT INTERRUPT THE LONGITUDINAL REINFORCEMENT OF THE GRADE BEAMS. GRADE BEAM PENETRATIONS NEAR PIER SUPPORTS ARE NOT PERMITTED.
8. UNLESS NOTED OTHERWISE ON ARCHITECTURAL DRAWINGS, PROVIDE 3/4" CHAMFER ON ALL EXPOSED CONCRETE EDGES.
9. ALL CONCRETE SLAB ACCESSORIES (TRENCHES, GRATING, EMBEDDED ITEMS, ETC.) SHALL BE DESIGNED FOR THE UNIFORM AND CONCENTRATED LIVE LOADS ON THIS SHEET.
10. REFER TO THE PLUMBING SPECIFICATIONS FOR THE USE OF SLEEVES AND SEALANTS AT PLUMBING PENETRATIONS THROUGH THE SLAB ON GRADE.
11. PROVIDE BOLLARDS AS REQUIRED BY ARCHITECTURAL SHEETS.

REINFORCED MASONRY NOTES:

1. ALL CMU SHALL BE 1 OR 2-CELL BLOCK.
2. MASONRY DESIGN STRENGTH, F'm = 2,000 PSI.
3. MINIMUM MORTAR COMPRESSIVE STRENGTH SHALL BE 2,200 PSI AT 28 DAYS.
4. CELLS WHICH CONTAIN REINFORCING STEEL SHALL BE FILLED SOLIDLY WITH MINIMUM 2,000 PSI (FINE OR COARSE) GROUT MEETING THE REQUIREMENTS OF ASTM C476.
5. VERTICAL CELLS TO BE FILLED SHALL HAVE VERTICAL ALIGNMENT SUFFICIENT TO MAINTAIN A CLEAR UNOBSTRUCTED CONTINUOUS VERTICAL CELL NOT LESS THAN 2 INCHES BY 3 INCHES IN PLAN DIMENSION.
6. SLAB DOWELS SHALL BE INSTALLED PER THE CMU DETAILS.
7. REFER TO ARCHITECTURAL DRAWINGS FOR ALL CMU WALL INFORMATION NOT SHOWN IN STRUCTURAL.
8. VERTICAL WALL REINFORCING SHALL USE THE BARS AS REQUIRED ON THE FOUNDATION PLAN AND DETAILS. VERTICAL REINFORCING SHALL EXTEND CONTINUOUSLY FROM THE TOP OF THE SLAB TO EMBED AT LEAST 6 INCHES INTO THE TOP BOND BEAM. LAP SPLICES OF 60 BAR DIAMETERS ARE PERMITTED.
9. BOND BEAM REINFORCING SHALL USE THE BARS AS REQUIRED ON THE FOUNDATION PLAN AND SHALL RUN CONTINUOUS THROUGHOUT. CORNER BARS SHALL BE PROVIDED AND LAP SPLICES OF 40 BAR DIAMETERS ARE PERMITTED. BOND BEAMS SHALL EXIST AT THE BOTTOM AND TOP COURSES. COORDINATE WITH ARCHITECTURAL REQUIREMENTS.
10. AN ADDITIONAL VERTICAL BAR OF THE SAME SIZE AND LENGTH AS THE NORMAL REINFORCING BAR SHALL BE PLACED:
    A. ON EACH SIDE OF CONTROL JOINTS
    B. AT ALL WALL INTERSECTIONS OF EXTERIOR WALLS
    C. AT ALL DISCONTINUOUS EDGES
    D. AT ALL DOOR AND WINDOW JAMBS
    E. AS SHOWN ON STRUCTURAL DRAWINGS
11. POST-INSTALLED DOWEL OR ANCHOR APPLICATIONS INTO GROUTED MASONRY SHALL USE HILTI HY-270 OR APPROVED EQUAL, UNLESS NOTED OTHERWISE. SUBSTITUTION REQUESTS SHALL PROVIDE CALCULATIONS DEMONSTRATING THE SUBSTITUTED PRODUCT IS CAPABLE OF ACHIEVING THE PERFORMANCE VALUES OF THE SPECIFIED PRODUCT UNDER THE CONDITIONS OF THE PROJECT. SUBSTITUTION REQUESTS SHALL FURTHER DEMONSTRATE PRODUCT APPLICABILITY BY ICC ESR SHOWING COMPLIANCE WITH THE RELEVANT BUILDING CODE FOR SEISMIC USE, LOAD RESISTANCE, INSTALLATION CATEGORY, AND ANY OTHER RELEVANT PROJECT CONDITIONS.

COLD-FORMED FRAMING NOTES:

1. COLD-FORMED FRAMING SHALL CONFORM WITH THE NORTH AMERICAN SPECIFICATION FOR THE DESIGN OF COLD-FORMED STEEL STRUCTURAL MEMBERS AISI S100-2007.
2. EAVE STRUT TOP AND BOTTOM FLANGES SHALL BE PARALLEL AND MATCH ROOF SLOPES.
3. WELDING ON COLD-FORMED STUDS IS NOT PERMITTED UNLESS SHOWN IN DETAILS ON THESE CONSTRUCTION DOCUMENTS OR APPROVED BY THE ENGINEER OF RECORD.
4. BOLTED LAPS ARE PERMITTED. UNLESS NOTED OTHERWISE, LAP BOLTS AND CONNECTION TO MAIN SUPPORT FRAMING SHALL BE 1/2" DIAMETER ASTM A307 BOLTS. WASHERS ARE NOT REQUIRED, UNLESS OTHERWISE NOTED IN DETAILS ON THESE CONSTRUCTION DOCUMENTS.

STEEL CONSTRUCTION NOTES:

1. ALL STRUCTURAL STEEL SHALL BE DETAILED, FABRICATED, AND ERECTED IN ACCORDANCE WITH THE APPLICABLE EDITIONS OF THE AISC "CODE OF STANDARD PRACTICE FOR STEEL BUILDINGS AND BRIDGES" AND THE AISC "SPECIFICATION FOR STRUCTURAL STEEL BUILDINGS", AND AS SUPPLEMENTED BY THESE GENERAL NOTES IN ADDITION TO THE PROJECT SPECIFICATIONS.
2. CONNECTIONS SHALL BE DESIGNED FOR THE FACTORED END REACTIONS, AXIAL LOADS AND END MOMENTS SHOWN ON THE DRAWINGS. WHERE END REACTIONS ARE NOT SHOWN, CONNECTIONS SHALL BE DESIGNED TO SUPPORT MINIMUM 15 KIPS SHEAR (FACTORED).
3. ALL CONNECTION PLATES, STIFFENERS, AND BOLTS SHOWN ON THE DRAWINGS ARE SCHEMATIC ONLY UNLESS ACTUAL SIZES ARE SPECIFIED. CONTRACTOR SHALL DESIGN ALL CONNECTIONS, SPLICES, PLATES, GUSSET PLATES, STIFFENERS, BOLTS, AND WELDS FOR FORCES INDICATED ON DRAWINGS IN ADDITION TO THE REQUIREMENTS OF THE AISC DESIGN SPECIFICATION.
4. THE STEEL CONTRACTOR SHALL FURNISH ERECTION BOLTS AS REQUIRED FOR FIELD CONNECTIONS.
5. ALL SHOP AND FIELD WELDS SHALL BE MADE IN ACCORDANCE WITH THE ANSI/AWS "D1.1 STRUCTURAL WELDING CODE - STEEL", APPLICABLE EDITION.
6. UNLESS NOTED OTHERWISE, ALL BOLTS SHALL BE ASTM A325-N WITH SUITABLE WASHERS AND NUTS.
7. SUBSTITUTION OF EXPANSION ANCHORS FOR EMBEDDED ANCHORS SHOWN ON THE DRAWING WILL NOT BE PERMITTED.
8. CUTS, HOLES, COPING, ETC. REQUIRED FOR WORK OF OTHER TRADES SHALL BE SHOWN ON THE SHOP DRAWINGS AND MADE IN THE SHOP. CUTS OR BURNING OF HOLES IN STRUCTURAL STEEL MEMBERS IN THE FIELD WILL NOT BE PERMITTED.
9. ALL STRUCTURAL STEEL EMBEDDED IN CONCRETE, SHALL BE HOT-DIPPED GALVANIZED, UNLESS NOTED OTHERWISE.
10. ALL ADDITIONAL FRAMING REQUIRED TO SUPPORT OR BRACE MECHANICAL OR ELECTRICAL EQUIPMENT OR PIPING NOT SHOWN ON THE STRUCTURAL DRAWINGS SHALL BE SUPPLIED BY THE MECHANICAL OR ELECTRICAL CONTRACTOR AT NO ADDITIONAL COST TO THE OWNER.

FSB
5801 Broadway Extension, Suite 500
Oklahoma City, OK 73118-7436
405.840.2931 | fsb-ae.com

WISCONSIN GENE O. BROWN E-47748 OKLAHOMA CITY OK PROFESSIONAL ENGINEER 6-15-26

115TH FIGHTER WING

Construct Alert GOV Parking Shelters

Truax Field, Madison, Wisconsin

REVISION HISTORY:

△	DESCRIPTION	DATE

PROJECT INFORMATION:

DESIGNED BY:	BNF
DRAWN BY:	BNF
REVIEWED BY:	BJW
PROJECT MANAGER:	NWC

PROJECT NUMBER: FSB2020-332-06

SHEET TITLE: **GENERAL NOTES**

ISSUE DATE: JUNE 15, 2026

SHEET NUMBER: S-001

6/16/2026 9:52:44 AM
Autodesk Docs://Wisconsin ANG - Alert Parking 303324_Shru_Rv025.rvt

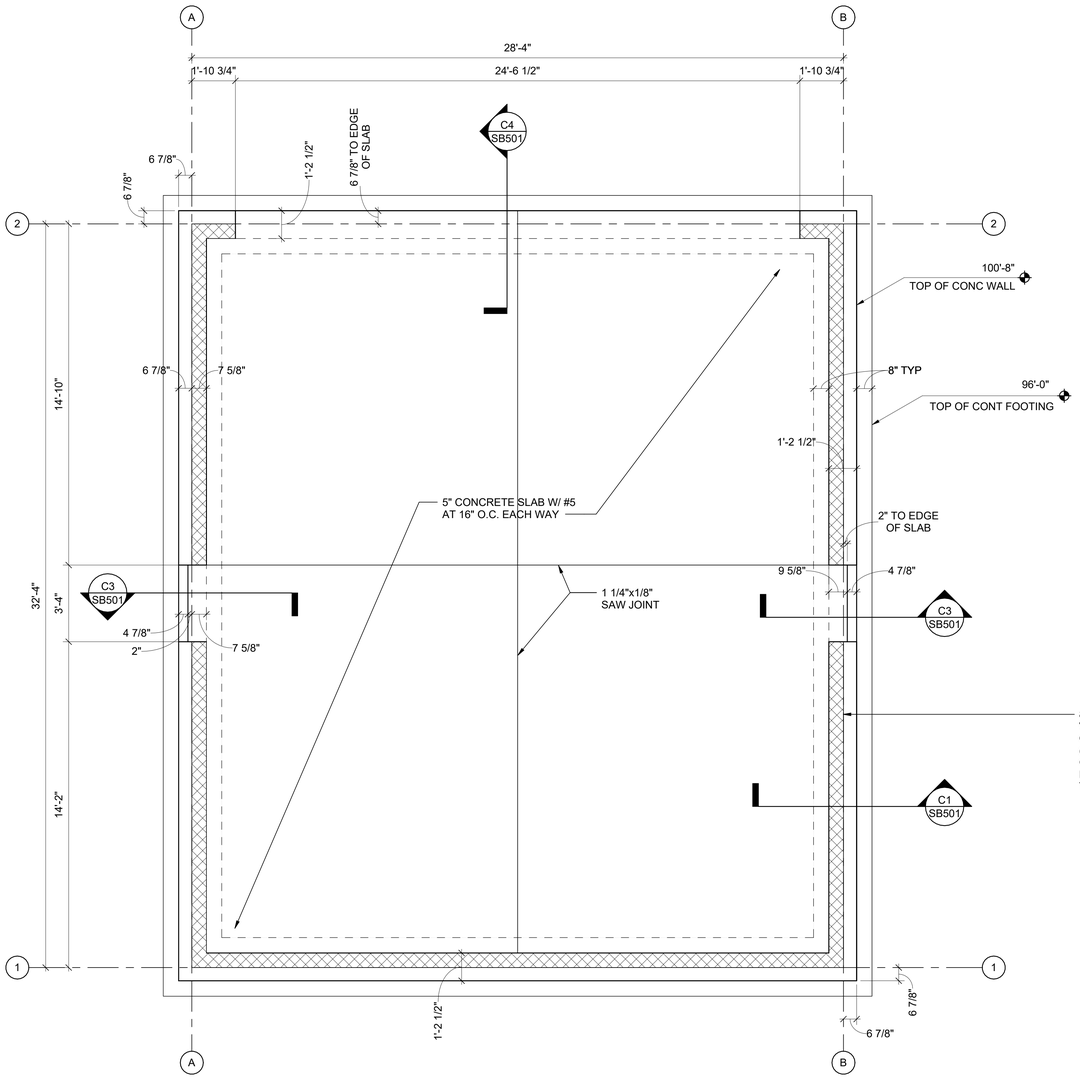

N

C1 FOUNDATION AND SLAB PLAN LARGE SHELTER

SCALE: 3/8" = 1'-0"

8" PARTIALLY GROUTED CMU WALL W/ VERTICAL REINFORCING (1) #5 AT 24" OC CENTERED AND BOND BEAM REINF W/ (1) #5 CONT AT BOTTOM AND TOP OF WALL GROUT CELLS WHERE REBAR OCCURS. BEARING ELEVATION: 100'-8" TOP ELEVATION: 104'-0"

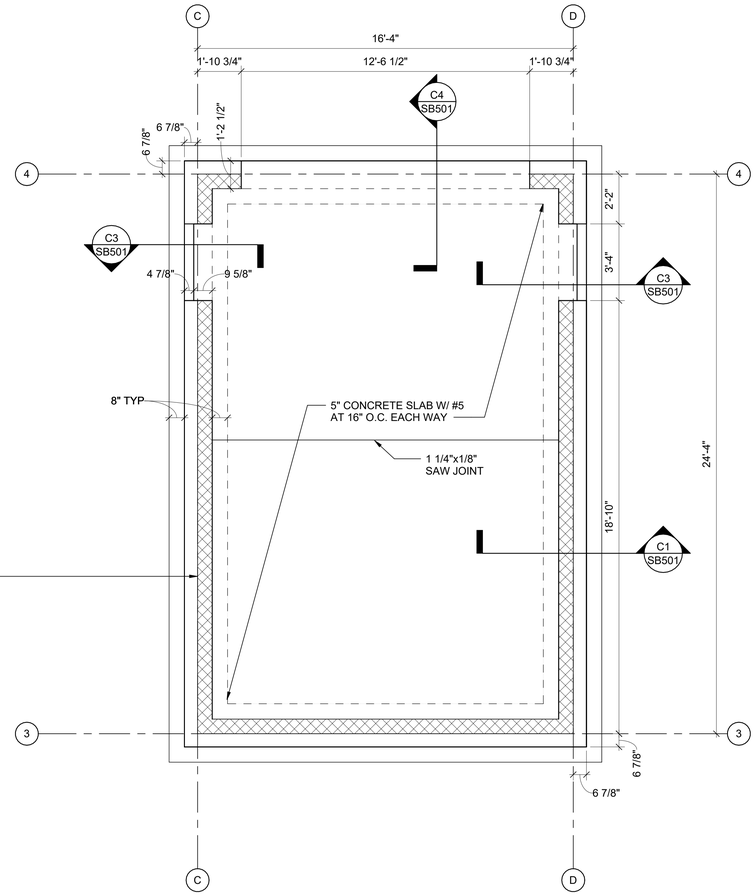

≈ C4 FOUNDATION AND SLAB PLAN SMALL SHELTER

SCALE: 3/8" = 1'-0"

0 2' 4' 6'

3/8" = 1'-0"

FSB

5801 Broadway Extension, Suite 500
Oklahoma City, OK 73118-7436
405.840.2931 | fsb-ae.com

WISCONSIN PROFESSIONAL ENGINEER
GENE O. BROWN
E-47748
OKLAHOMA CITY
OK
6-15-26

115th FIGHTER WING

Construct Alert GOV Parking Shelters

Truax Field, Madison, Wisconsin

REVISION HISTORY:

△	DESCRIPTION	DATE

PROJECT INFORMATION:

DESIGNED BY:	BNF
DRAWN BY:	BNF
REVIEWED BY:	BJW
PROJECT MANAGER:	NWC

PROJECT NUMBER: FSB2020-332-06

SHEET TITLE: FOUNDATION PLAN

ISSUE DATE: JUNE 15, 2026

SHEET NUMBER: SB101

6/16/2026 8:52:44 AM

Autodesk Docs://Wisconsin ANG - Alert Parking 00324_Shru_Rv025.rvt

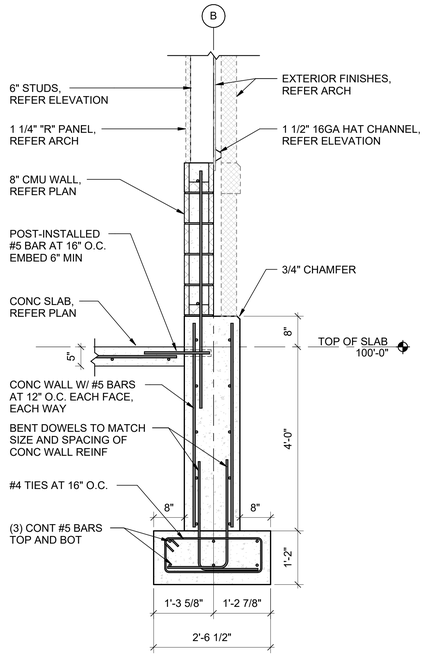

C1 SECTION
SCALE: 3/4" = 1'-0"

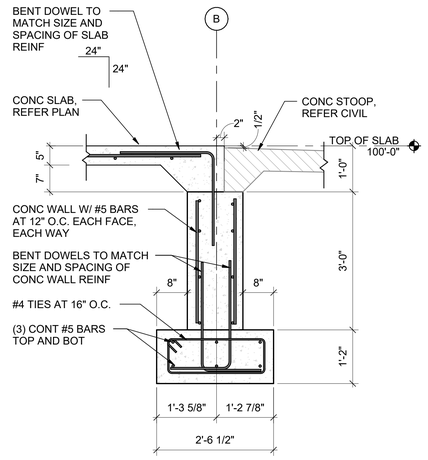

C3 SECTION AT MAN DOOR
SCALE: 3/4" = 1'-0"

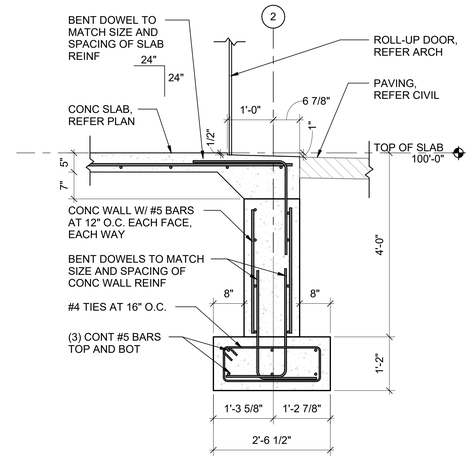

C4 SECTION AT ROLL-UP DOOR
SCALE: 3/4" = 1'-0"

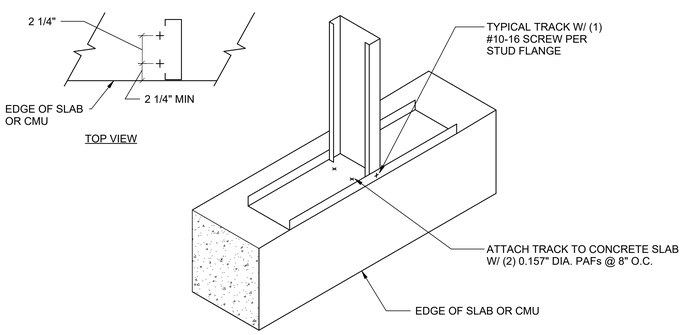

A1 BASE CONNECTION
SCALE: NTS

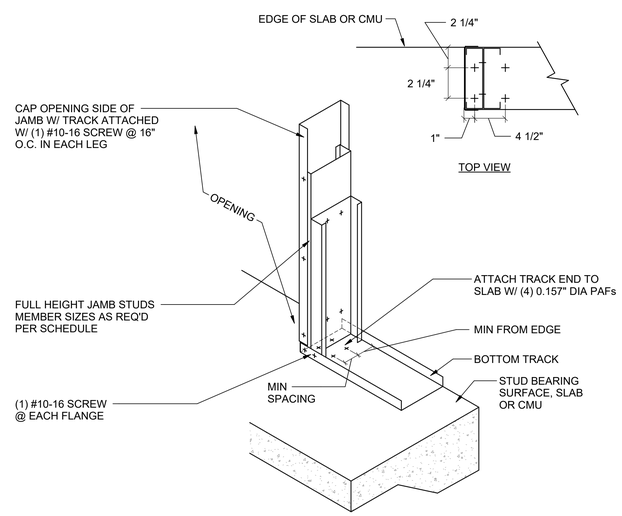

(2) JAMB ANCHORAGE TO STRUCTURE W/ (4) FASTENERS

A3 DOOR JAMB ANCHORAGE
SCALE: NTS

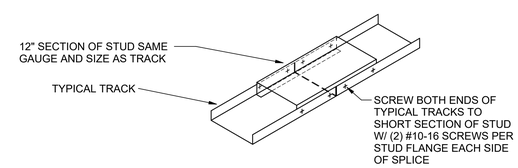

A5 BOTTOM TRACK SPLICE
SCALE: NTS

0 1' 2' 3'
3/4" = 1'-0"

FSB
5801 Broadway Extension, Suite 500
Oklahoma City, OK 73118-7436
405.840.2931 | fsb-ae.com

WISCONSIN PROFESSIONAL ENGINEER
GENE O. BROWN
E-47748
OKLAHOMA CITY
OK
6-15-26

115th FIGHTER WING

Construct Alert GOV Parking Shelters

Truax Field, Madison, Wisconsin

REVISION HISTORY:

	DESCRIPTION	DATE

PROJECT INFORMATION:

DESIGNED BY:	BNF
DRAWN BY:	BNF
REVIEWED BY:	BJW
PROJECT MANAGER:	NWC

PROJECT NUMBER: FSB2020-332-06

SHEET TITLE: FOUNDATION DETAILS

ISSUE DATE: JUNE 15, 2026

SHEET NUMBER: SB501

6/16/2026 9:52:44 AM
Autodesk Docs://Wisconsin ANG - Alert Parking 03032_Stru_Rv25.rvt

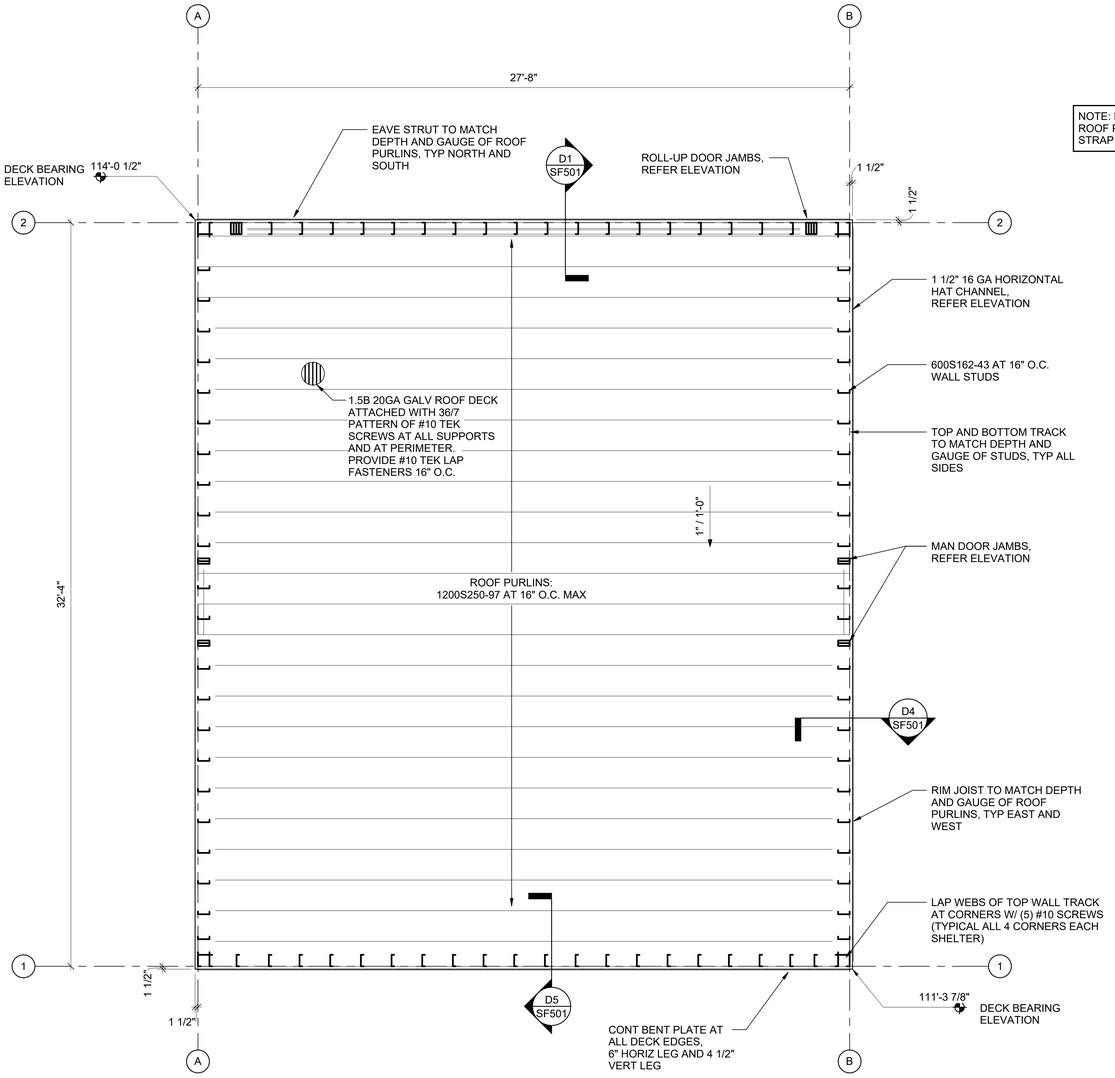

NOTE: PROVIDE SOLID BLOCKING BETWEEN ROOF PURLINS AT 5'-4" AND CONTINOUS STRAP BRIDGING TOP AND BOTTOM

N

C2 ROOF FRAMING PLAN LARGE SHELTER

SCALE: 3/8" = 1'-0"

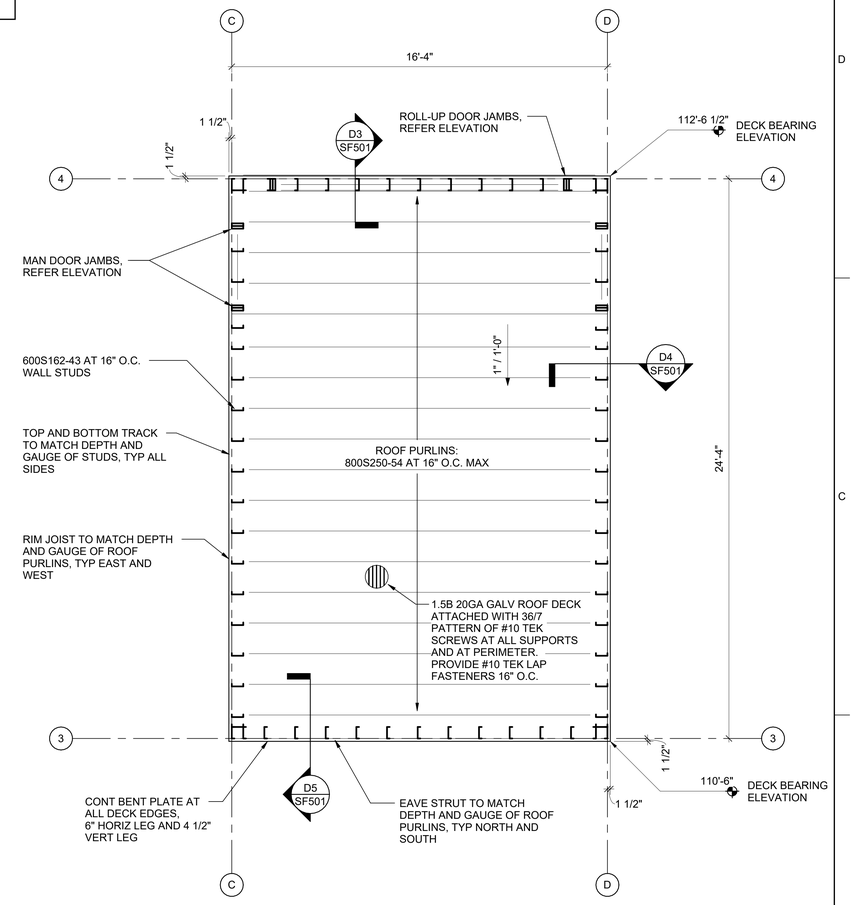

≈ C4 ROOF FRAMING PLAN SMALL SHELTER

SCALE: 3/8" = 1'-0"

0 2' 4' 6'

3/8" = 1'-0"

5801 Broadway Extension, Suite 500
Oklahoma City, OK 73118-7436
405.840.2931 | fsb-ae.com

WISCONSIN GENE O. BROWN E-47748 OKLAHOMA CITY OK PROFESSIONAL ENGINEER

6-15-26

115th FIGHTER WING

Construct Alert GOV Parking Shelters

Truax Field, Madison, Wisconsin

REVISION HISTORY:

	DESCRIPTION	DATE

PROJECT INFORMATION:

DESIGNED BY:	BNF
DRAWN BY:	BNF
REVIEWED BY:	BJW
PROJECT MANAGER:	NWC
PROJECT NUMBER:	FSB2020-332-06
SHEET TITLE:	FRAMING PLAN
ISSUE DATE:	JUNE 15, 2026
SHEET NUMBER:	SF101

6/16/2026 8:52:45 AM

Autodesk Docs://Wisconsin ANG - Alert Parking /03324_Shtr_Rv/25.rvt

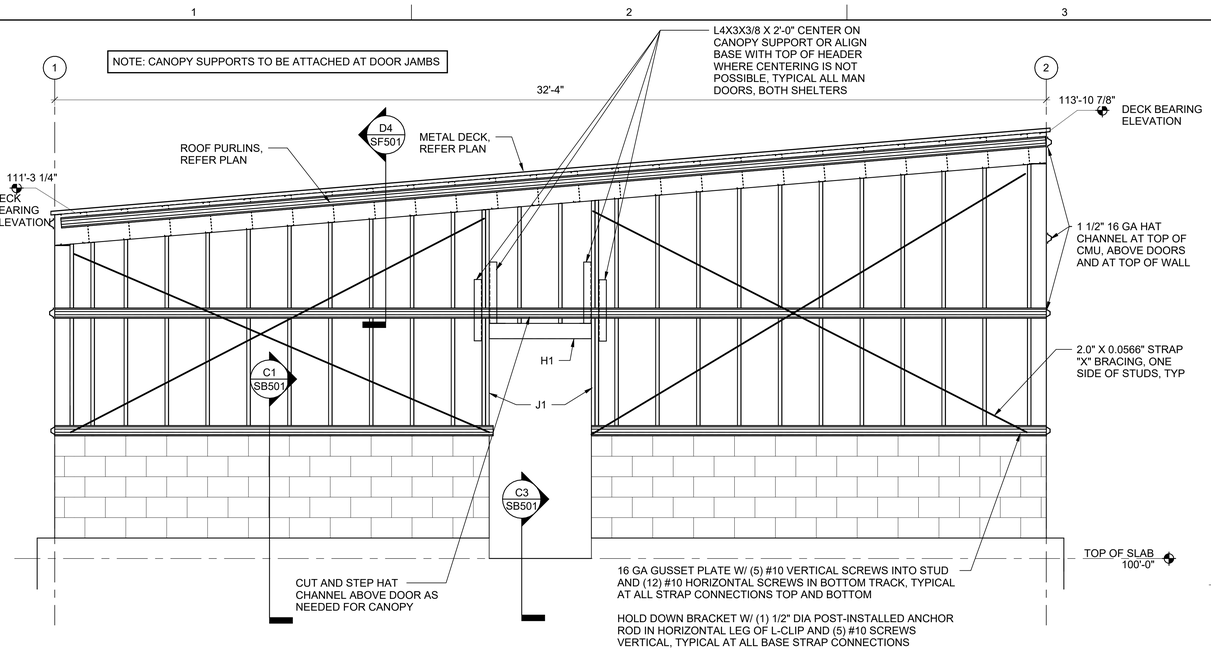

D2 EAST ELEVATION - LARGE SHELTER
SCALE: 1/2" = 1'-0"

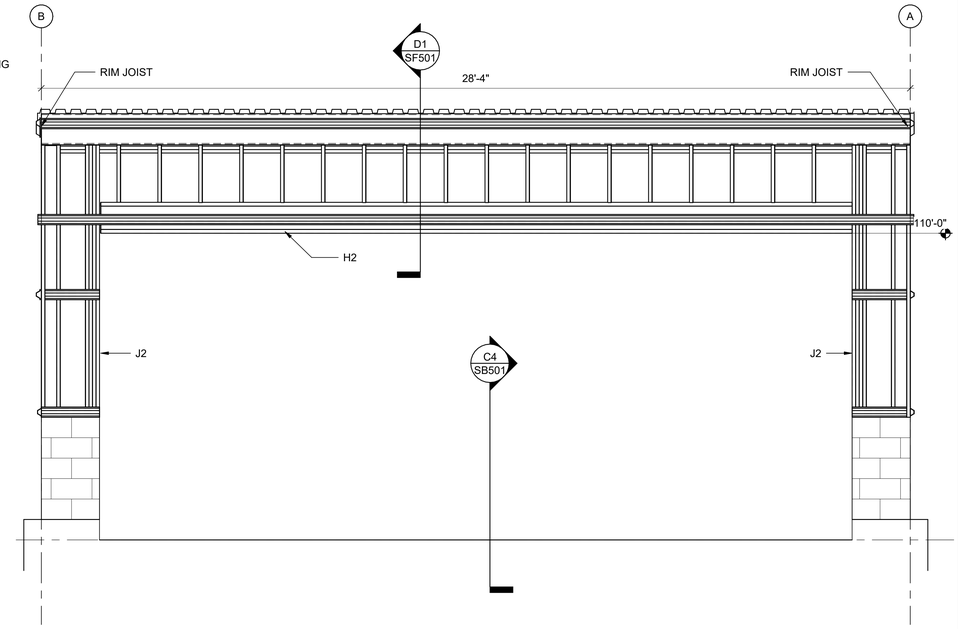

D4 NORTH ELEVATION - LARGE SHELTER
SCALE: 1/2" = 1'-0"

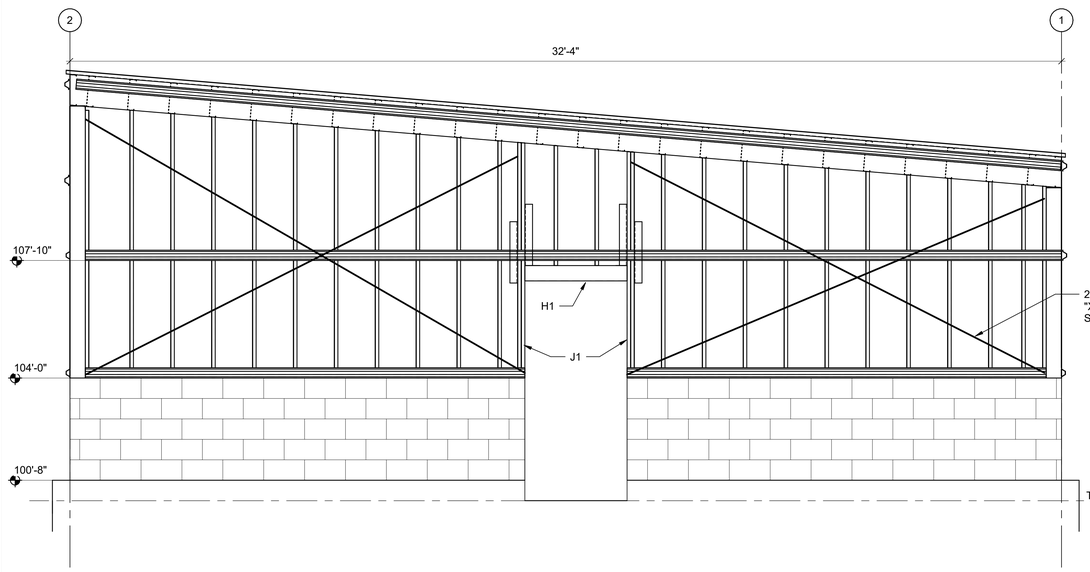

B2 WEST ELEVATION - LARGE SHELTER
SCALE: 1/2" = 1'-0"

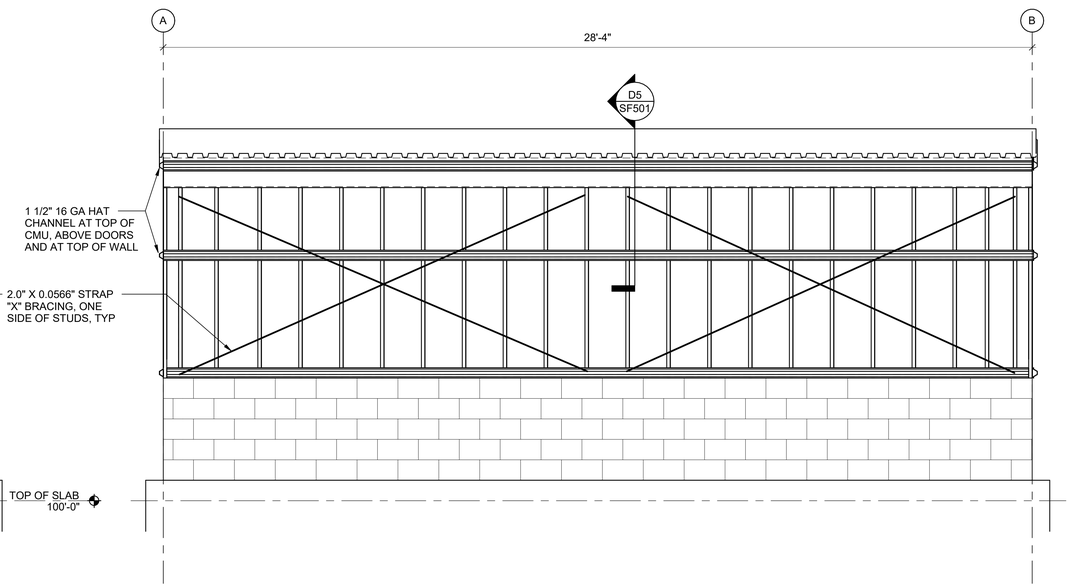

B4 SOUTH ELEVATION - LARGE SHELTER
SCALE: 1/2" = 1'-0"

CFS HEADER AND JAMB SCHEDULE FOR LARGE SHELTER

HEADER	MARK	STUD WALL DEPTH	MAX OPENING WIDTH	MAX WALL HEIGHT	HEADER/LINTEL TYPE	HEADER/LINTEL MEMBERS (NOTE 1)	JAMB TYPE	JAMB MARK	JAMB TYPE	JAMB MEMBERS
MAN DOOR HEADER	H1	6"	4'-0"	15'-0"		VERT: (2) 600S162-54 HORIZ: (2) 600T125-54	MAN DOOR	J1		(2) 600S162-68 (1) 600T125-68
ROLL-UP DOOR HEADER	H2	6"	24'-0"	15'-0"		VERT: (3) 1200S162-68 HORIZ: (3) 600T250-97 (1) 600S162-54	ROLL-UP DOOR	J2		(4) 600S162-68 (3) 600T125-68

NOTES: 1. ALL HEADER/LINTEL STUDS SHALL BE UNPUNCHED

0 1' 2' 4'
1/2" = 1'-0"

5801 Broadway Extension, Suite 500
Oklahoma City, OK 73118-7436
405.840.2931 | fsb-ae.com

WISCONSIN GENE O. BROWN E-47748 OKLAHOMA CITY OK PROFESSIONAL ENGINEER
6-15-26

115TH FIGHTER WING

Construct Alert GOV Parking Shelters
Truax Field, Madison, Wisconsin

REVISION HISTORY:

△	DESCRIPTION	DATE

PROJECT INFORMATION:
DESIGNED BY: BNF
DRAWN BY: BNF
REVIEWED BY: BJW
PROJECT MANAGER: NWC
PROJECT NUMBER: FSB2020-332-06
SHEET TITLE: FRAMING ELEVATIONS
ISSUE DATE: JUNE 15, 2026
SHEET NUMBER: SF201

6/16/2026 9:52:45 AM
Autodesk Docs://Wisconsin ANG - Alert Parking /03324_Shl_Rv02.rvt

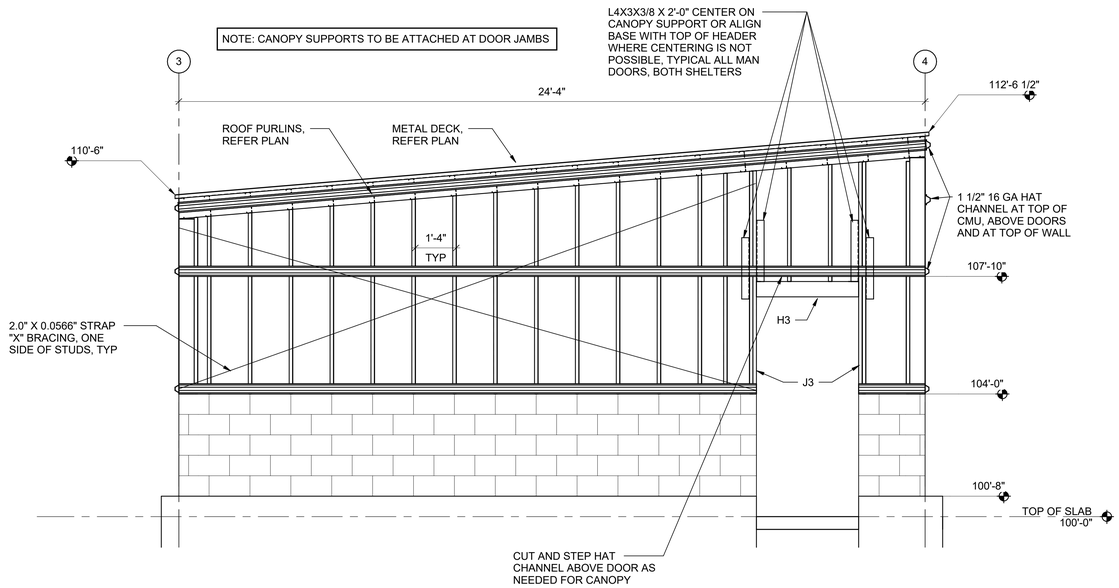

D2 EAST ELEVATION - SMALL SHELTER

SCALE: 1/2" = 1'-0"

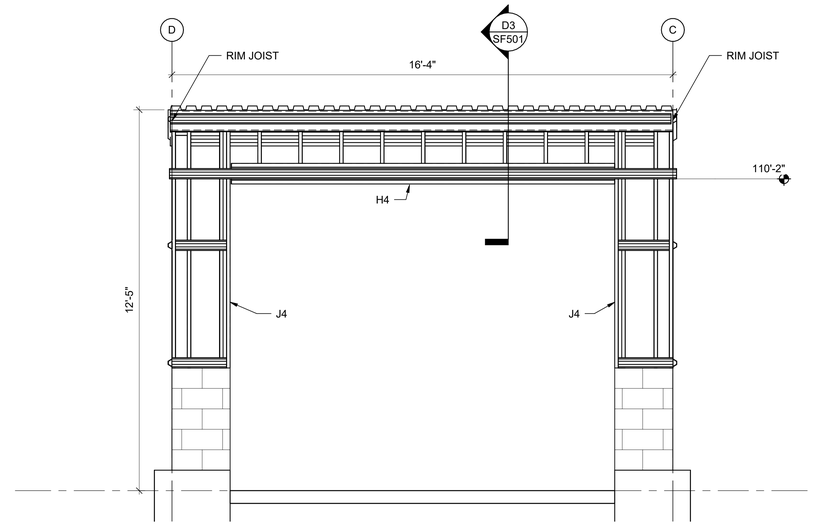

D4 NORTH ELEVATION - SMALL SHELTER

SCALE: 1/2" = 1'-0"

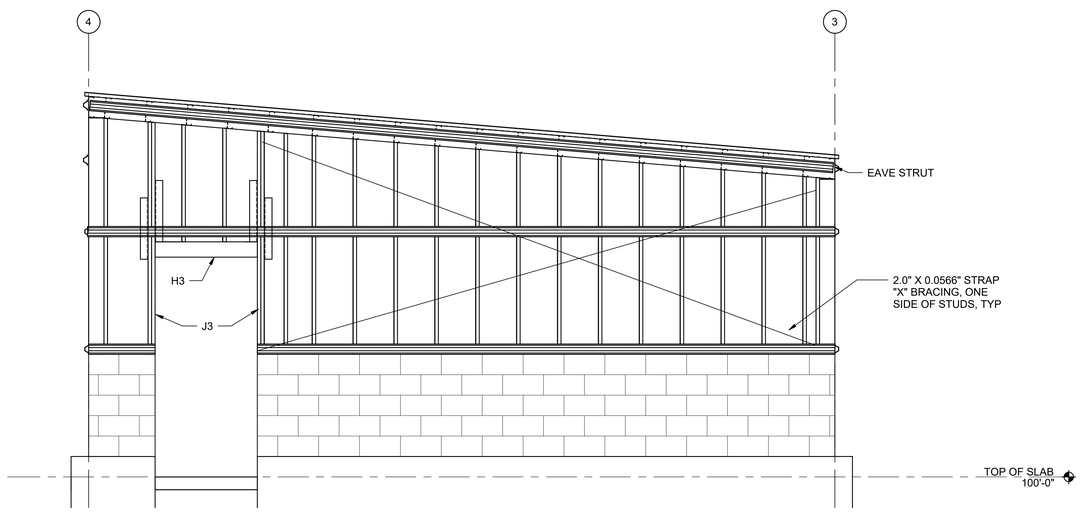

B2 WEST ELEVATION - SMALL SHELTER

SCALE: 1/2" = 1'-0"

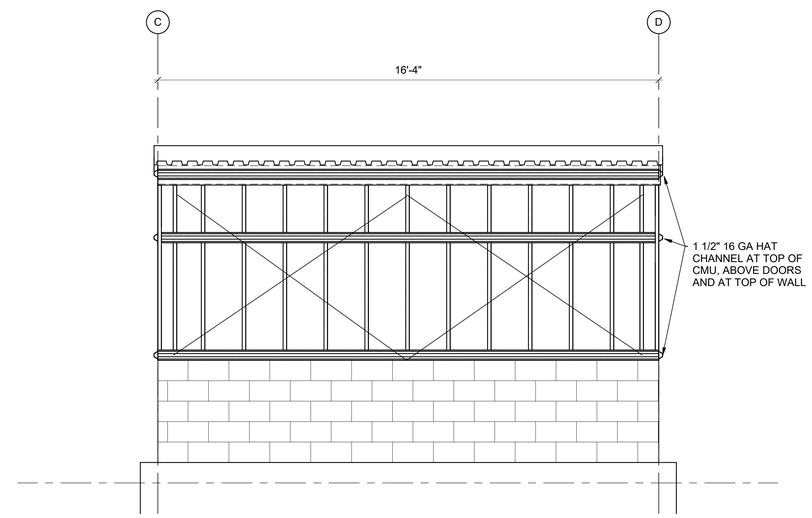

B4 SOUTH ELEVATION - SMALL SHELTER

SCALE: 1/2" = 1'-0"

CFS HEADER AND JAMB SCHEDULE FOR SMALL SHELTER

HEADER	MARK	STUD WALL DEPTH	MAX OPENING WIDTH	MAX WALL HEIGHT	HEADER/LINTEL TYPE	HEADER/LINTEL MEMBERS (NOTE 1)	JAMB TYPE	JAMB MARK	JAMB TYPE	JAMB MEMBERS
MAN DOOR HEADER	H3	6"	4'-0"	15'-0"		VERT: (2) 600S162-54 HORIZ: (2) 600T125-54	MAN DOOR	J3		(2) 600S162-68 (1) 600T125-68
ROLL-UP DOOR HEADER	H4	6"	14'-0"	15'-0"		VERT: (2) 800S162-68 HORIZ: (2) 600T250-68	ROLL-UP DOOR	J4		(3) 600S162-68 (2) 600T125-68

NOTES: 1. ALL HEADER/LINTEL STUDS SHALL BE UNPUNCHED

0 1' 2' 4'

1/2" = 1'-0"

FSB
5801 Broadway Extension, Suite 500
Oklahoma City, OK 73118-7436
405.840.2931 | fsb-ae.com

WISCONSIN
GENE O. BROWN
E-47748
OKLAHOMA CITY
OK
PROFESSIONAL ENGINEER
6-15-26

115th FIGHTER WING

Construct Alert GOV Parking Shelters

Truax Field, Madison, Wisconsin

REVISION HISTORY:

△	DESCRIPTION	DATE

PROJECT INFORMATION:

DESIGNED BY: BNF

DRAWN BY: BNF

REVIEWED BY: BJW

PROJECT MANAGER: NWC

PROJECT NUMBER: FSB2020-332-06

SHEET TITLE: FRAMING ELEVATIONS

ISSUE DATE: JUNE 15, 2026

SHEET NUMBER: SF202

6/16/2026 9:52:46 AM

Autodesk Docs://Wisconsin ANG - Alert Parking 03324_Shu_Rv25.rvt

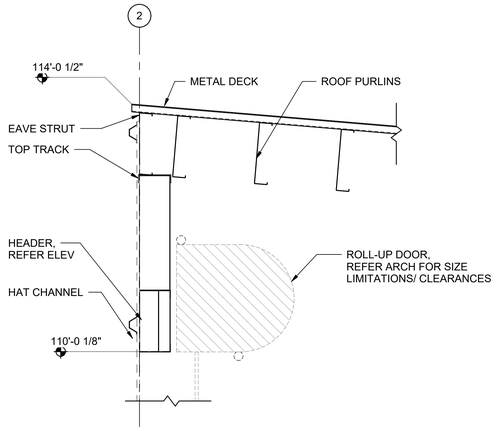

D1 SECTION
SCALE: 1" = 1'-0"

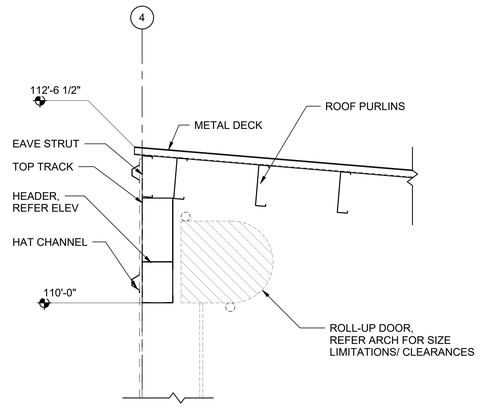

D3 SECTION
SCALE: 1" = 1'-0"

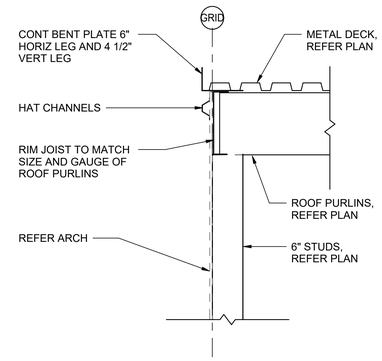

D4 SECTION
SCALE: 1" = 1'-0"

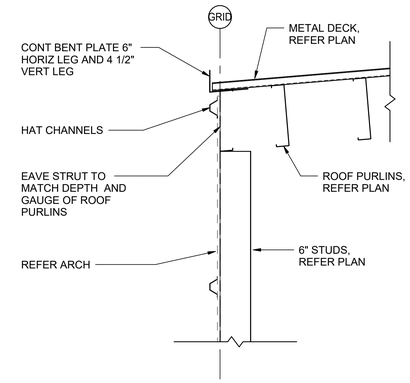

D5 SECTION
SCALE: 1" = 1'-0"

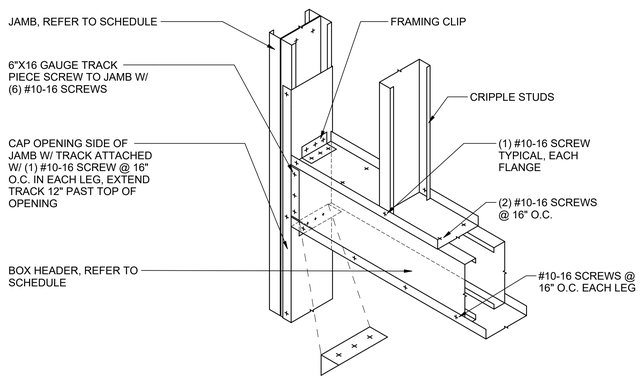

C1 BOXED HEADER CONNECTION
SCALE: NTS

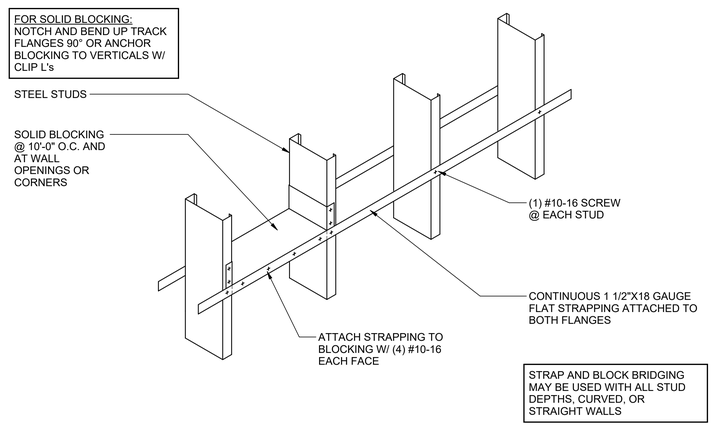

C3 STRAP AND BLOCK - LOAD BEARING WALL BRIDGING
SCALE: NTS

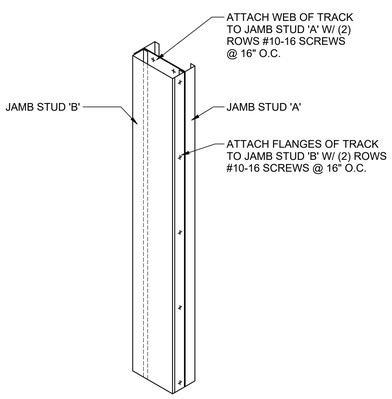

A1 TIED JAMB STUDS
SCALE: NTS

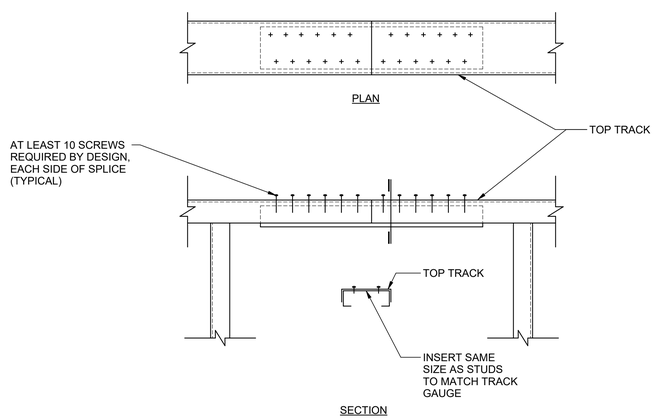

A3 TOP TRACK SPLICE
SCALE: NTS

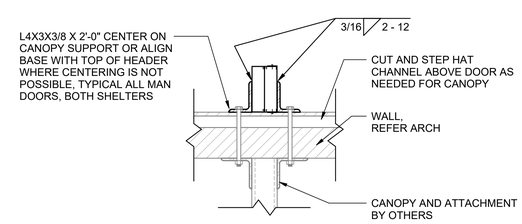

A4 REINFORCED JAMB AT CANOPIES
SCALE: 1 1/2" = 1'-0"

0 6" 1' 1'-6"
1 1/2" = 1'-0"

0 6" 1' 2'
1" = 1'-0"

FSB
5801 Broadway Extension, Suite 500
Oklahoma City, OK 73118-7436
405.840.2931 | fsb-ae.com

WISCONSIN
GENE O. BROWN
E-47748
OKLAHOMA CITY
OK
PROFESSIONAL ENGINEER
6-15-26

115th FIGHTER WING

Construct Alert GOV Parking Shelters

Truax Field, Madison, Wisconsin

REVISION HISTORY:

△	DESCRIPTION	DATE

PROJECT INFORMATION:

DESIGNED BY:	BNF
DRAWN BY:	BNF
REVIEWED BY:	BJW
PROJECT MANAGER:	NWC

PROJECT NUMBER: FSB2020-332-06

SHEET TITLE: **FRAMING DETAILS**

ISSUE DATE: JUNE 15, 2026

SHEET NUMBER: SF501

6/16/2026 9:52:46 AM
Autodesk Docs://Wisconsin ANG - Alert Parking /03324_Shu_Rv25.rvt

ARCHITECTURAL ABBREVIATIONS

ACT	ACOUSTICAL CEILING TILE
ADA	AMERICANS WITH DISABILITIES ACT
ADAAG	ADA ACCESSIBILITY GUIDELINES
ADJ	ADJACENT
AFF	ABOVE FINISH FLOOR
AHU	AIR HANDLING UNIT
AJ	AESTHETIC JOINT
ALT	ALTERNATE
ALUM	ALUMINUM
ANSI	AMERICAN NATIONAL STANDARDS INSTITUTE
APC	ACOUSTICAL PANEL CEILING
ASI	ARCHITECT'S SUPPLEMENTAL INFORMATION
AV	AUDIO VISUAL
BLDG	BUILDING
BO	BOTTOM OF
BOT	BOTTOM
BRG	BEARING
BS	BOTH SIDES
BTWN	BETWEEN
CAB	CABINET
CFMF	COLD-FORMED METAL FRAMING
CG	CORNER GUARD
CJ	CONTROL JOINT
CL	CENTER LINE
CLG	CEILING
CLR	CLEAR
CMU	CONCRETE MASONRY UNIT
COL	COLUMN
CONC	CONCRETE
CONF	CONFERENCE
CONT	CONTINUOUS
CONTR	CONTRACTOR
COORD	COORDINATE
CORR	CORRIDOR
CPT	CARPET
CTB	CERAMIC TILE BASE
CWT	CERAMIC WALL TILE
CTR	CENTER
CU	CUBIC
D	DEPTH
DAT	DATUM
DBL	DOUBLE
DEG	DEGREE
DEMO	DEMOLITION
DEPT	DEPARTMENT
DET/DTL	DETAIL
DF	DRINKING FOUNTAIN
DIA	DIAMETER
DIAG	DIAGONAL
DIM	DIMENSION
DISP	DISPENSER
DN	DOWN
DR	DOOR
DS	DOWNSPOUT
DWG	DRAWING
E	EAST
EA	EACH
EIFS	EXTERIOR INSULATION & FINISH SYSTEM
EJ	EXPANSION JOINT
EL	ELEVATION
ELEC	ELECTRIC (OR) ELECTRICAL
ELEV	ELEVATOR
EQ	EQUAL
EQUIP	EQUIPMENT
EW	EACH WAY
EXIST	EXISTING
EXT	EXTERIOR
FAAP	FIRE ALARM ANNUNCIATOR PANEL
FD	FLOOR DRAIN
FDC	FIRE DEPARTMENT CONNECTION
FE	FIRE EXTINGUISHER
FF EL	FINISH FLOOR ELEVATION
FG	FINISHED GRADE
FH	FIRE HYDRANT
FLR	FLOOR
FPC	FIRE PROTECTION CABINET
FLUOR	FLUORESCENT
FR	FIRE RESISTIVE
FRGB	FIBER REINFORCED GYPSUM BOARD
FT	FOOT (OR) FEET
FTG	FOOTING
FURG	FURRING
FV	FIELD VERIFY
GA	GAUGE
GALV	GALVANIZED
GB	GRAB BAR
GC	GENERAL CONTRACTOR
GDR	GUARD RAIL
GEN	GENERAL
GFRG	GLASS FIBER REINFORCED GYPSUM
GL	GLASS
GRD	GRADE
GYM	GYMNASIUM
GYP BD	GYPSUM BOARD
HM	HOLLOW METAL
HORIZ	HORIZONTAL
HR	HOUR
HT	HEIGHT
HVAC	HEATING, VENTILATING, & AIR CONDITIONING
IBC	INTERNATIONAL BUILDING CODE
ID	INSIDE DIAMETER
IN	INCH(ES)
INSUL	INSULATE (OR) INSULATION
INT	INTERIOR
JAN	JANITOR
JT	JOINT
KIT	KITCHEN
LAM	LAMINATE
LAV	LAVATORY
LBS	POUND(S)
LED	LIGHT EMITTING DIODE
LF	LINEAR FEET (FOOT)
LH	LEFT HAND
LIB	LIBRARY
LIN	LINEAR
LOC	LOCATION
LTG	LIGHTING
LVR	LOUVER
MAINT	MAINTENANCE
MATL	MATERIAL
MAX	MAXIMUM
MECH	MECHANICAL
MEP	MECHANICAL, ELECTRICAL, PLUMBING
MEZZ	MEZZANINE
MFR	MANUFACTURER
MIN	MINIMUM
MIRR	MIRROR
MISC	MISCELLANEOUS
MJ	MASONRY EXPANSION JOINT
MO	MASONRY OPENING
MTD	MOUNTED
MTL	METAL
N	NORTH
NA	NOT APPLICABLE
NC	NOISE CRITERIA
NFPA	NATIONAL FIRE PROTECTION ASSOCIATION
NIC	NOT IN CONTRACT
NO	NUMBER
NOM	NOMINAL
NRC	NOISE REDUCTION COEFFICIENT
NTS	NOT TO SCALE
OA	OVERALL
OC	ON CENTER
OD	OUTSIDE DIAMETER
OFCI	OWNER FURNISHED CONTRACTOR INSTALLED
OFOI	OWNER FURNISHED OWNER INSTALLED
OFS	OUTSIDE FACE OF STUDS
OH	OPPOSITE HAND
OPNG	OPENING
OPP	OPPOSITE
OPT	OPTIONAL
ORD	OVERFLOW ROOF DRAIN
OVHD	OVERHEAD
OZ	OUNCE(S)
PCI	PRECAST / PRESTRESSED CONCRETE INSTITUTE
PEMB	PRE-ENGINEERED METAL BUILDING
PH	PHASE
PLAM	PLASTIC LAMINATE
PLBG	PLUMBING
PLF	POUNDS PER LINEAR FOOT
PLYWD	PLYWOOD
PR	PAIR
PRCST	PRECAST
PREFAB	PREFABRICATED
PRELIM	PRELIMINARY
PROJ	PROJECT
PSF	POUNDS PER SQUARE FOOT
PSI	POUNDS PER SQUARE INCH
PT	PAINT (INTERIOR)
PVC	POLYVINYL CHLORIDE
QTF	QUARRY TILE FLOOR
QTB	QUARRY TILE BASE
QTY	QUANTITY
R	RADIUS (OR) RISER
RB	RESILIENT BASE
RCP	REFLECTED CEILING PLAN
RD	ROOF DRAIN
RE	REFERENCE
REBAR	REINFORCING STEEL BARS
REC	RECESSED
REF	REFERENCE (OR) REFRIGERATOR
REINF	REINFORCED
REQD	REQUIRED
REV	REVISION
RF	RESILIENT FLOORING
RFI	REQUEST FOR INTERPRETATION
RH	RIGHT HAND
RM	ROOM
RO	ROUGH OPENING
ROW	RIGHT OF WAY
RTU	ROOF TOP UNIT
S	SOUTH
SC	SOLID CORE
SCHED	SCHEDULE(D)
SECT	SECTION
SF	SQUARE FOOT (FEET)
SHTHG	SHEATHING
SIM	SIMILAR
SPEC	SPECIFICATION(S)
SQ	SQUARE
SST	STAINLESS STEEL
STC	SOUND TRANSMISSION CLASSIFICATION
STD	STANDARD
STL	STEEL
STOR	STORAGE
STRUCT	STRUCTURAL (OR) STRUCTURE
T	TREAD
T&B	TOP AND BOTTOM
TBD	TO BE DETERMINED
TD	TOWEL DISPENSER
TEMP	TEMPORARY
THK	THICKNESS (THICK)
THRES	THRESHOLD
THRU	THROUGH
TO	TOP OF
TOB	TOP OF BEAM
TOC	TOP OF CONCRETE
TOJ	TOP OF JOIST
TOM	TOP OF MASONRY
TOS	TOP OF STEEL
TOW	TOP OF WALL
TV	TELEVISION
TYP	TYPICAL
UC	UNDER COUNTER
UL	UNDERWRITERS LABORATORIES
UNO	UNLESS NOTED OTHERWISE
UTIL	UTILITY
VAR	VARIES
VB	VINYL BASE
VCT	VINYL COMPOSITION TILE
VER	VERIFY
VERT	VERTICAL
VOL	VOLUME
VTR	VENT THROUGH ROOF
VWC	VINYL WALL COVERING
W	WEST
W/	WITH
W/O	WITHOUT
WC	WATER CLOSET
WD	WOOD
WH	WALL HYDRANT (OR) WATER HEATER
WT	WEIGHT
XFMR	TRANSFORMER
YD	YARD
Z	NOT USED

ARCHITECTURAL SYMBOLS LEGEND

DISCIPLINE TYPE (ARCHITECTURE SHOWN)
DISCIPLINE MODIFIER (ELEMENTS SHOWN)
DRAWING TYPE (PLAN, ELEVATION, ETC.)
SERIES/ FLOOR DESIGNATION

AE 101

DRAWING TYPES LEGEND
0- GENERAL INFORMATION
1 - PLANS (HORIZONTAL VIEWS)
2 - ELEVATIONS (VERTICAL VIEWS)
3 - SECTIONS (SECTIONAL VIEWS)
4 - ENLARGED VIEWS (PLANS, ELEVATIONS OR SECTIONS)
5 - DETAILS
6 - SCHEDULES & DIAGRAMS

112.01A
FLOOR LEVEL
3 DIGIT ROOM NUMERAL
OFFICE SUITE DESIGNATION
SUB-ROOM NUMBER

1 GROUND FLOOR PLAN
SCALE:1/8"=1'-0"

DRAWING TITLE

LOCATED IN THE BOTTOM RIGHT SHEET CORNER
N
0 4' 8' 16'
1/8" = 1'-0"
0 2' 4' 8'
1/4" = 1'-0"

NORTH ARROW AND SCALE

101A
DOOR NUMBER SYMBOL
REFER TO DOOR SCHEDULE

1 A201
EXTERIOR ELEVATION CALLOUT
ARROW INDICATE ELEVATION ON SHEET INDICATED

1 A302
SECTION CALLOUT
ARROW INDICATE WALL SECTION ON SHEET INDICATED

1 A301 1 A301
BUILDING SECTION CALLOUT
ARROWS INDICATE BUILDING SECTION ON SHEET INDICATED

KEYNOTE SYMBOL
INDICATES INFORMATION FOUND IN KEYNOTES ON PLAN

A
PARTITION TYPE SYMBOL
REFER TO PARTITION TYPES

ROOM NAME
106
ROOM NAME & NUMBER SYMBOL
REFER TO ROOM FINISH SCHEDULE

1 A401
DETAIL CALLOUT
ENLARGED PLAN OR DETAIL ON SHEET INDICATED

1 A
STRUCTURAL GRIDS
AS INDICATED ON DRAWINGS

AL1
GLAZING TYPE SYMBOL
REFER TO GLAZING TYPES

A201
INTERIOR ELEVATION CALLOUT
ARROWS INDICATE INTERIOR ELEVATION ON SHEET INDICATED

1
REVISION SYMBOL
REFER TO SHEET BORDER FOR REVISION HISTORY

Top Text
Bottom Text
ELEVATION DATUM SYMBOL
INDICATES DATUM ELEVATION AS INDICATED

FSB
5801 Broadway Extension, Suite 500
Oklahoma City, OK 73118-7436
405.840.2931 | fsb-ae.com

WISCONSIN JASON T. HOLUBY A-13101 OKLAHOMA CITY OK ARCHITECT 6/15/2026

115th FIGHTER WING

Construct Alert GOV Parking Shelters
Truax Field, Madison, Wisconsin

REVISION HISTORY:

	DESCRIPTION	DATE

PROJECT INFORMATION:

DESIGNED BY:	JBC
DRAWN BY:	JBC
REVIEWED BY:	JBC
PROJECT MANAGER:	NWC

PROJECT NUMBER: FSB2020-332-06

SHEET TITLE: ABBREVIATIONS AND SYMBOLS

ISSUE DATE: JUNE 15, 2026

SHEET NUMBER: A-001

6/16/2026 11:32:01 AM
Autodesk Docs://Wisconsin ANG - Alert Parking/00324_Arch_RVT25.rvt

GENERAL NOTES

A. REFER TO ELECRICAL SHEETS FOR LIGHTING LAYOUT.
B. CEILING OF BOTH PARKING STRUCTURES SHALL BE PAINTED WHITE.

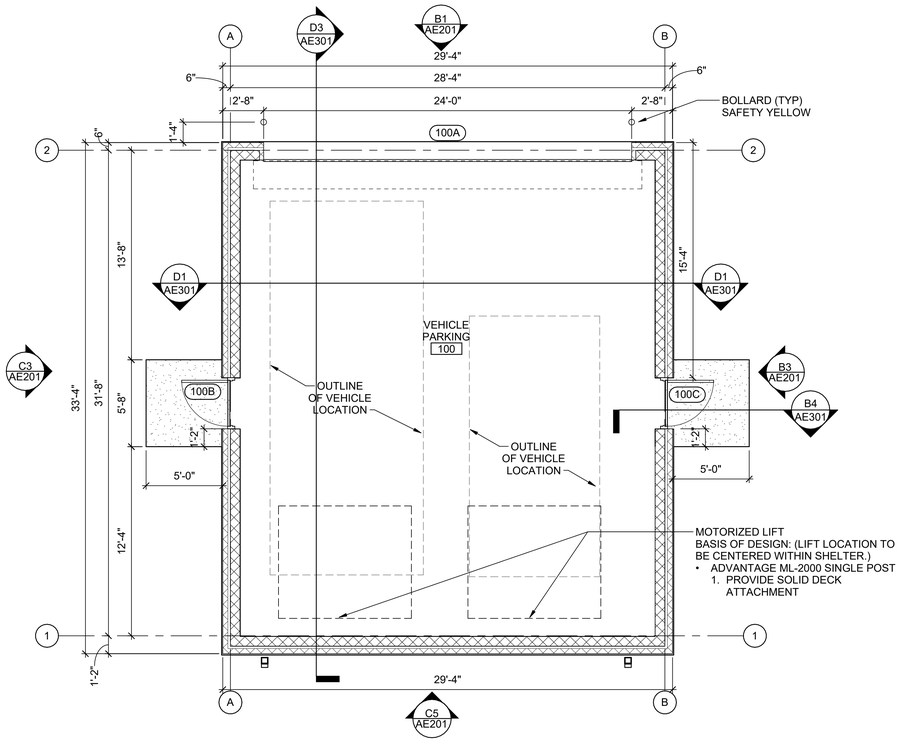

N

C1 FLOOR PLAN - LARGE SHELTER
SCALE: 1/4" = 1'-0"

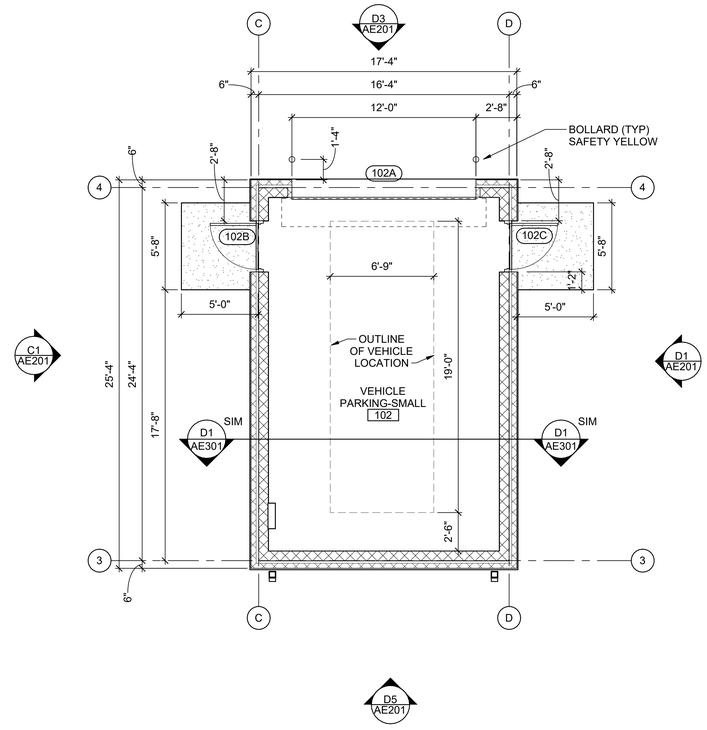

C4 FLOOR PLAN - SMALL SHELTER
SCALE: 1/4" = 1'-0"

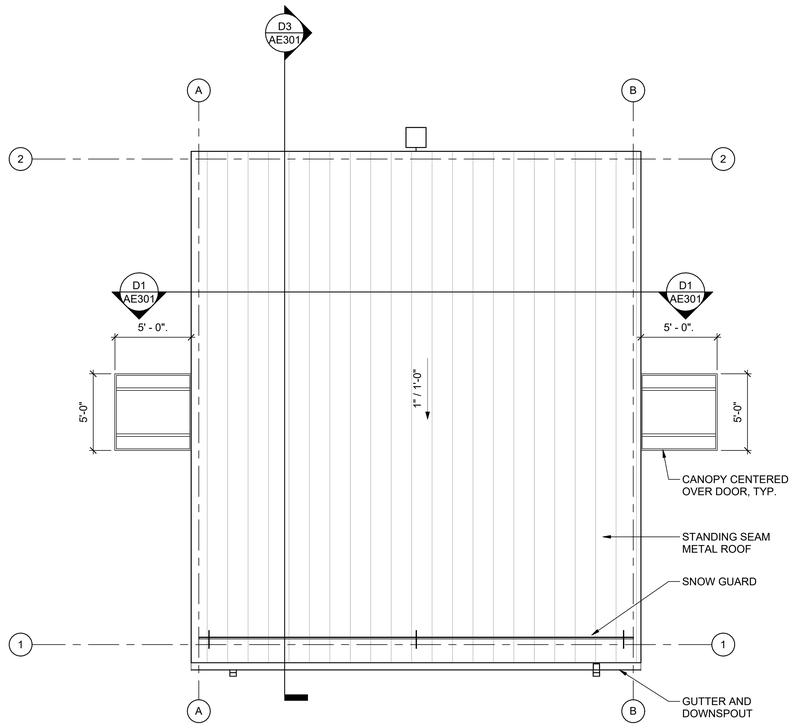

N

A1 ROOF PLANS - LARGE SHELTER
SCALE: 1/4" = 1'-0"

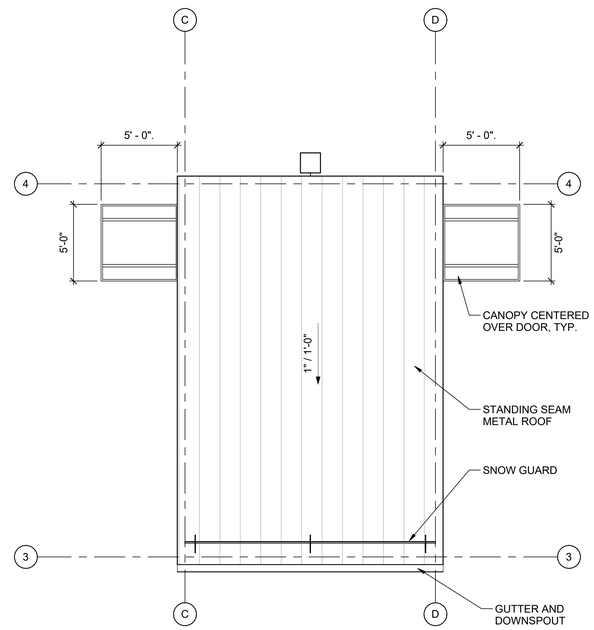

A4 ROOF PLANS - SMALL SHELTER
SCALE: 1/4" = 1'-0"

0 2' 4' 8'
1/4" = 1'-0"

FSB
5801 Broadway Extension, Suite 500
Oklahoma City, OK 73118-7436
405.840.2931 | fsb-ae.com

WISCONSIN JASON T. HOLUBY A-13101 OKLAHOMA CITY OK ARCHITECT 6/15/2026

115th FIGHTER WING

Construct Alert GOV Parking Shelters

Truax Field, Madison, Wisconsin

REVISION HISTORY:

△	DESCRIPTION	DATE

PROJECT INFORMATION:

DESIGNED BY:	JBC
DRAWN BY:	BDR
REVIEWED BY:	JBC
PROJECT MANAGER:	NWC

PROJECT NUMBER: FSB2020-332-06

SHEET TITLE: COMPOSITE GROUND FLOOR PLAN

ISSUE DATE: JUNE 15, 2026

SHEET NUMBER: AE100

6/16/2026 11:32:02 AM

Autodesk Docs://Wisconsin ANG - Alert Parking 003324_Arch_R17725.rvt

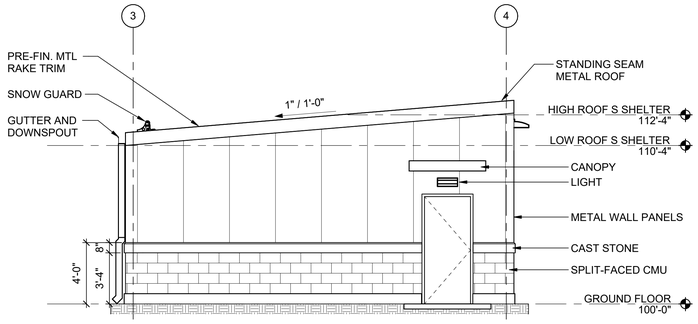

D1 NORTH ELEVATION - SMALL SHELTER
SCALE: 1/4" = 1'-0"

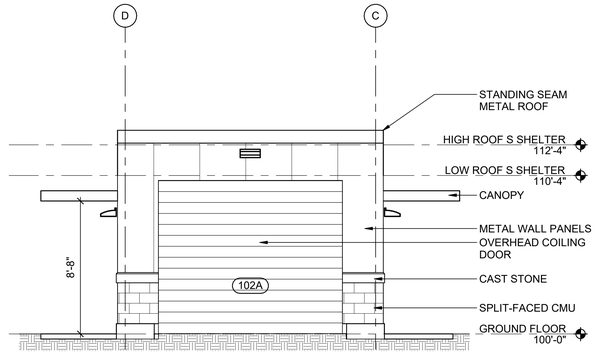

D3 WEST ELEVATION - SMALL SHELTER
SCALE: 1/4" = 1'-0"

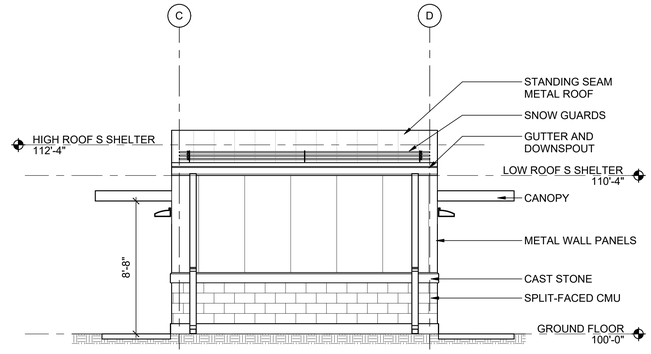

D5 EAST ELEVATION - SMALL SHELTER
SCALE: 1/4" = 1'-0"

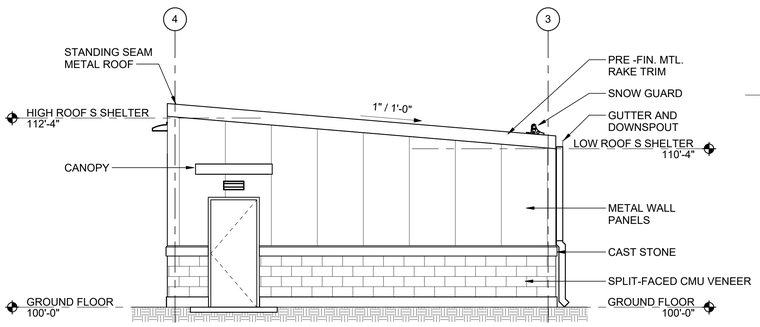

C1 SOUTH ELEVATION - SMALL SHELTER
SCALE: 1/4" = 1'-0"

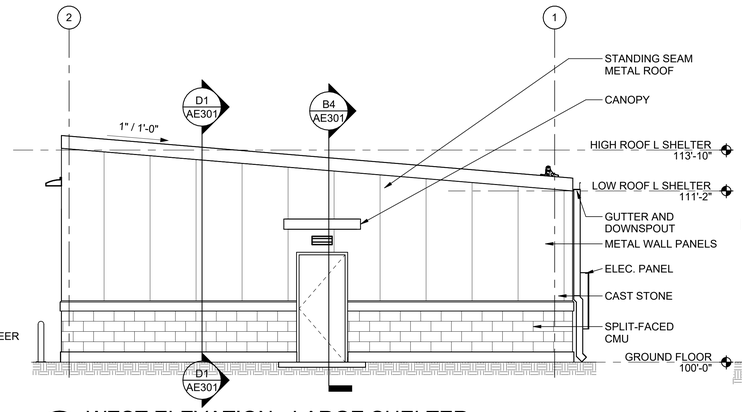

C3 WEST ELEVATION - LARGE SHELTER
SCALE: 1/4" = 1'-0"

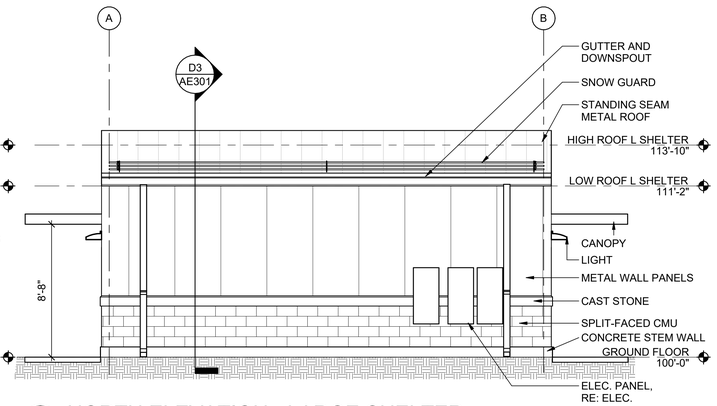

C5 NORTH ELEVATION - LARGE SHELTER
SCALE: 1/4" = 1'-0"

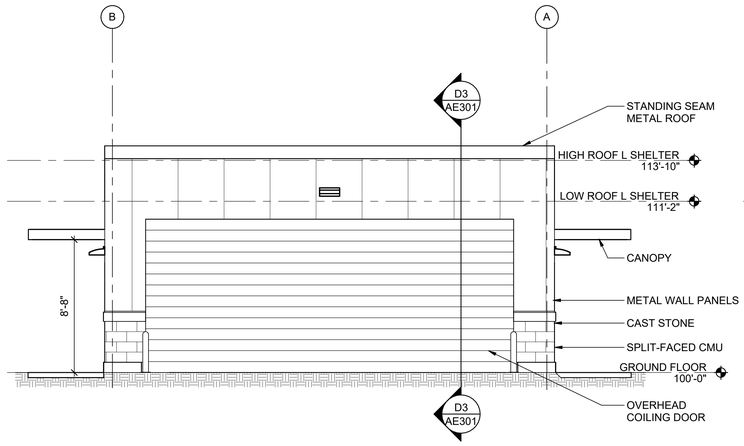

B1 SOUTH ELEVATION - LARGE SHELTER
SCALE: 1/4" = 1'-0"

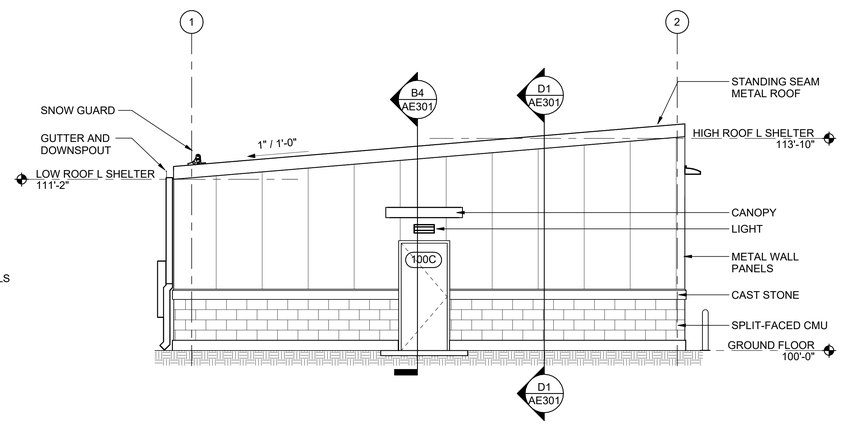

B3 EAST ELEVATION - LARGE SHELTER
SCALE: 1/4" = 1'-0"

0 2' 4' 8'
1/4" = 1'-0"

FSB
5801 Broadway Extension, Suite 500
Oklahoma City, OK 73118-7436
405.840.2931 | fsb-ae.com

WISCONSIN JASON T. HOLUBY A-13101 OKLAHOMA CITY OK ARCHITECT 6/15/2026

115TH FIGHTER WING

Construct Alert GOV Parking Shelters

Truax Field, Madison, Wisconsin

REVISION HISTORY:

	DESCRIPTION	DATE

PROJECT INFORMATION:

DESIGNED BY: JBC
DRAWN BY: BDR
REVIEWED BY: JBC
PROJECT MANAGER: NWC
PROJECT NUMBER: FSB2020-332-06
SHEET TITLE: BUILDING ELEVATIONS
ISSUE DATE: JUNE 15, 2026
SHEET NUMBER: AE201

6/16/2026 11:32:05 AM
Autodesk Docs://Wisconsin ANG - Alert Parking 00324_Arch_R23725.rvt

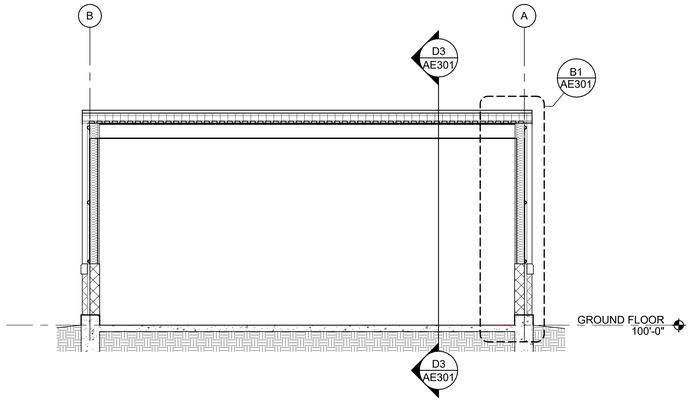

D1 BUILDING SECTION - VEHICLE PARKING 100
SCALE: 1/4" = 1'-0"

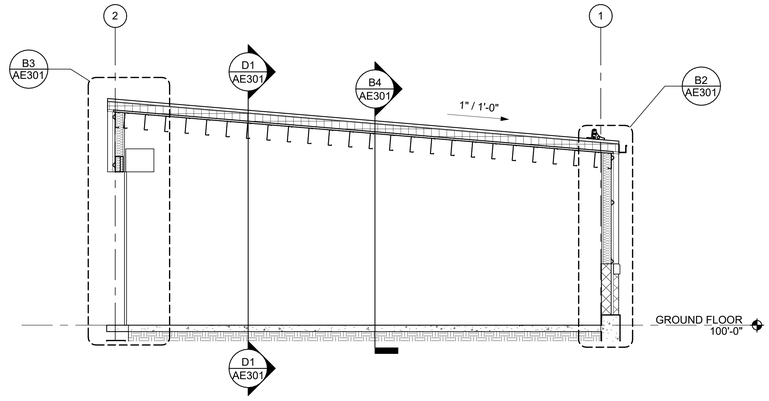

D3 BUILDING SECTION - VEHICLE PARKING 100
SCALE: 1/4" = 1'-0"

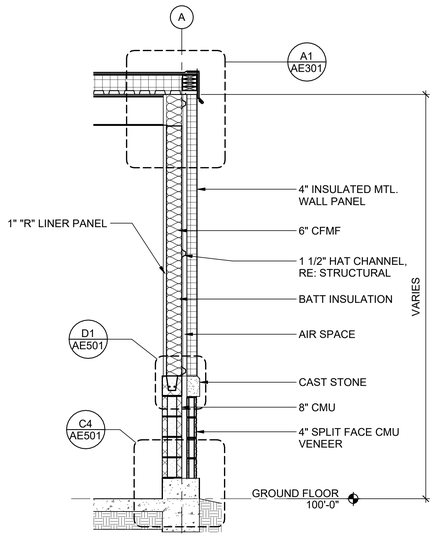

B1 WALL SECTION
SCALE: 1/2" = 1'-0"

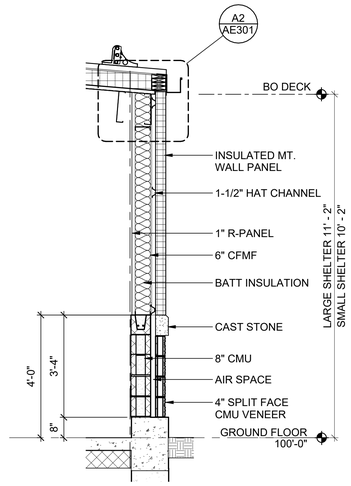

B2 WALL SECTION
SCALE: 1/2" = 1'-0"

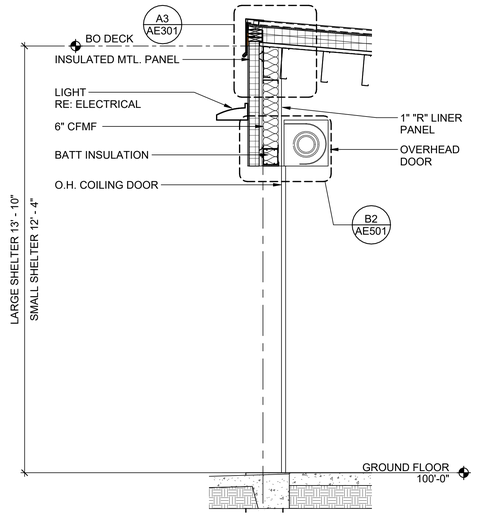

B3 WALL SECTION
SCALE: 1/2" = 1'-0"

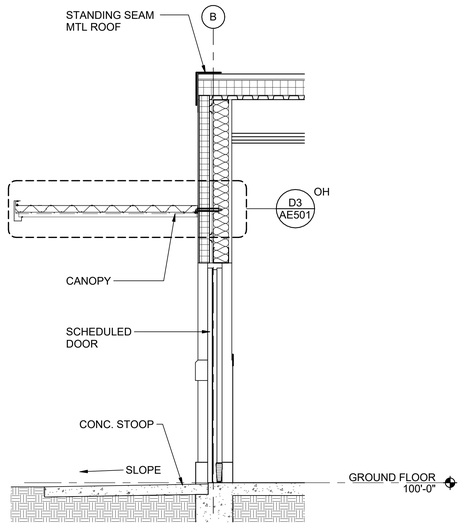

B4 WALL SECTION
SCALE: 1/2" = 1'-0"

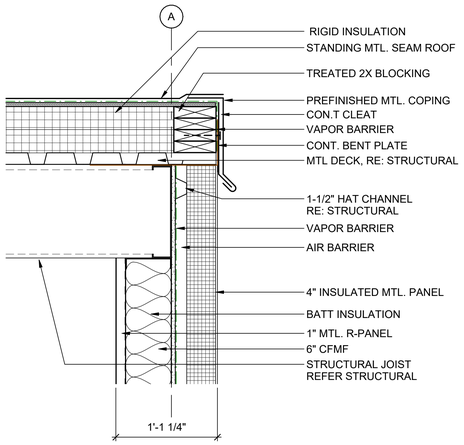

A1 ROOF DETAIL - RAKE
SCALE: 1 1/2" = 1'-0"

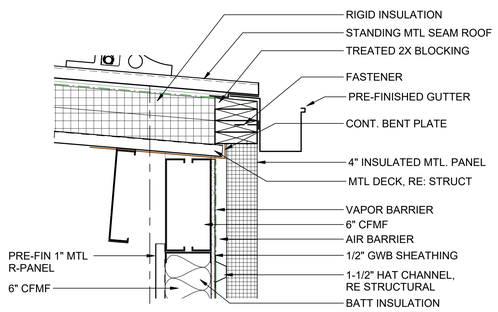

A2 ROOF DETAIL @ GUTTER
SCALE: 1 1/2" = 1'-0"

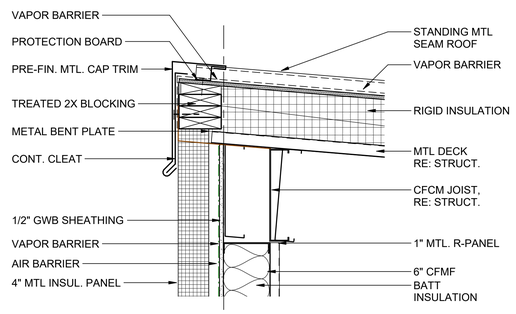

A3 ROOF DETAIL - RIDGE
SCALE: 1 1/2" = 1'-0"

0 2' 4' 8'
1/4" = 1'-0"

0 1' 2' 4'
1/2" = 1'-0"

0 6" 1' 1'-6"
1 1/2" = 1'-0"

FSB
5801 Broadway Extension, Suite 500
Oklahoma City, OK 73118-7436
405.840.2931 | fsb-ae.com

WISCONSIN
JASON T. HOLUBY
A-13101
OKLAHOMA CITY
OK
ARCHITECT
6/15/2026

115TH FIGHTER WING

Construct Alert GOV Parking Shelters

Truax Field, Madison, Wisconsin

REVISION HISTORY:

	DESCRIPTION	DATE

PROJECT INFORMATION:

DESIGNED BY:	JBC
DRAWN BY:	BDR
REVIEWED BY:	JBC
PROJECT MANAGER:	NWC

PROJECT NUMBER: FSB2020-332-06

SHEET TITLE: BUILDING SECTIONS

ISSUE DATE: JUNE 15, 2026

SHEET NUMBER: AE301

6/16/2026 11:42:19 AM
Autodesk Docs://Wisconsin ANG - Alert Parking /03324_Arch_R/725.rvt

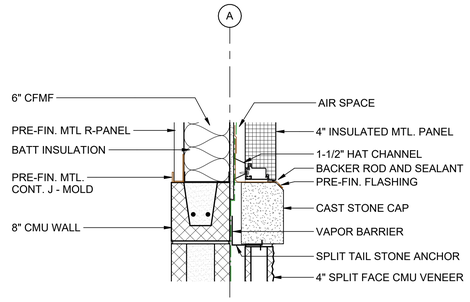

D1 WALL SECTION DETAIL
SCALE: 1 1/2" = 1'-0"

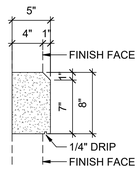

D2 CAST STONE
SCALE: 1 1/2" = 1'-0"

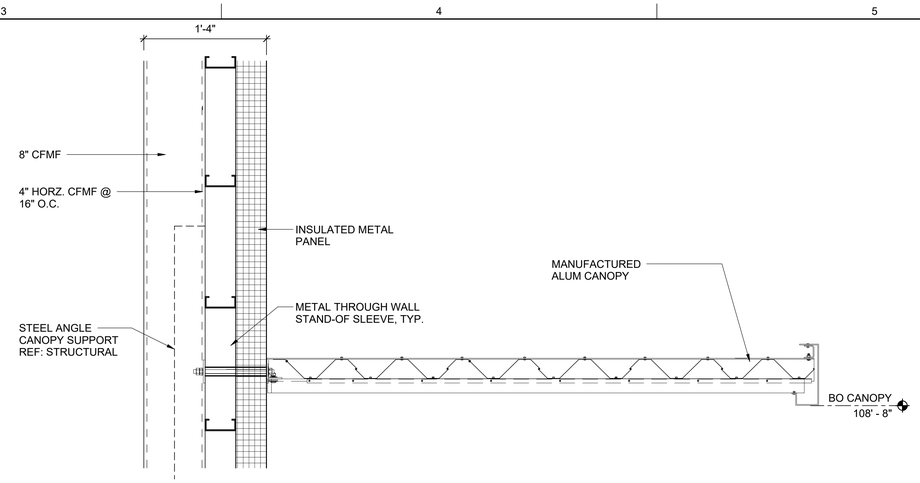

D3 PRE-ENGINEERED METAL CANOPY
SCALE: 1 1/2" = 1'-0"

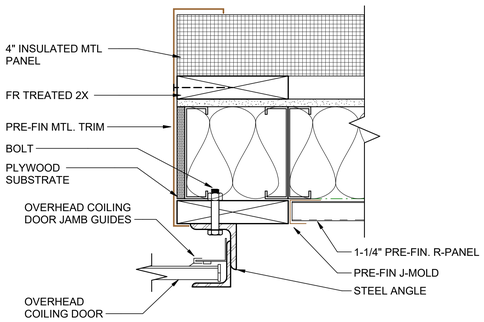

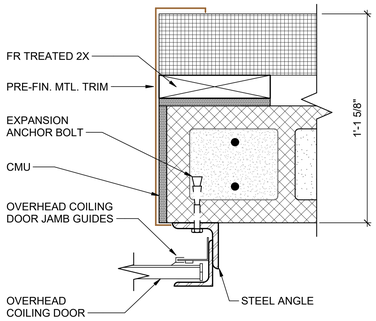

B1 JAMB DETAIL
SCALE: 3" = 1'-0"

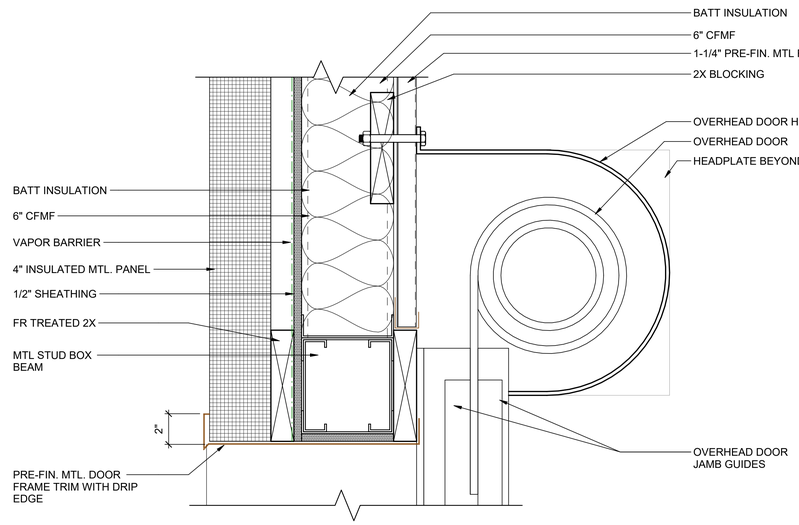

B2 HEAD DETAIL
SCALE: 3" = 1'-0"

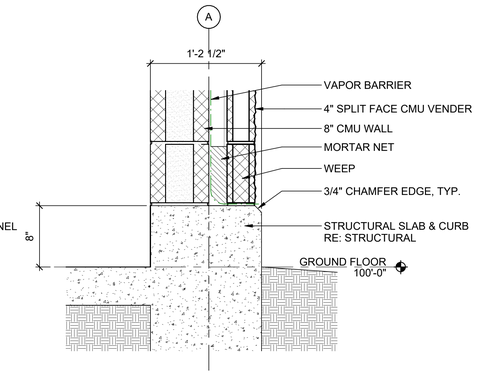

C4 WALL SECTION DETAIL
SCALE: 1 1/2" = 1'-0"

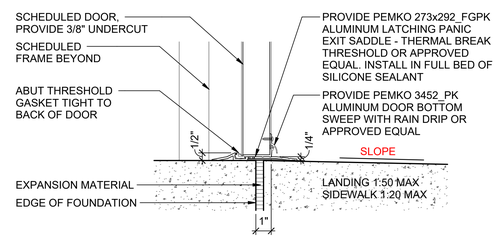

B4 THRESHOLD DETAIL
SCALE: 3" = 1'-0"

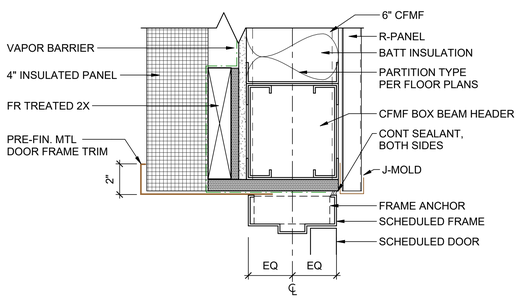

A1 HEAD DETAIL
SCALE: 3" = 1'-0"

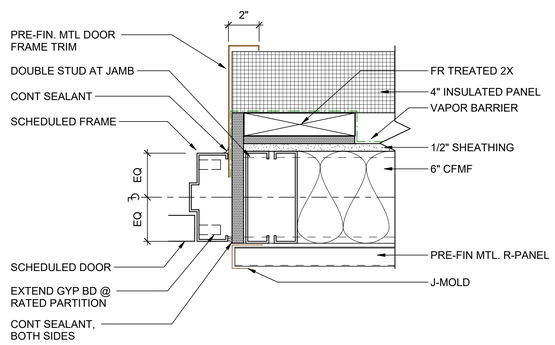

A2 JAMB DETAIL
SCALE: 3" = 1'-0"

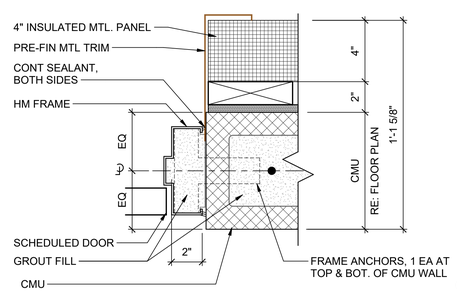

A4 JAMB DETAIL
SCALE: 3" = 1'-0"

0 6" 1' 1'-6"
1 1/2" = 1'-0"

0 3" 6" 9"
3" = 1'-0"

FSB
5801 Broadway Extension, Suite 500
Oklahoma City, OK 73118-7436
405.840.2931 | fsb-ae.com

WISCONSIN JASON T. HOLUBY A-13101 OKLAHOMA CITY OK ARCHITECT 6/15/2026

115th FIGHTER WING

Construct Alert GOV Parking Shelters
Truax Field, Madison, Wisconsin

REVISION HISTORY:

	DESCRIPTION	DATE

PROJECT INFORMATION:

DESIGNED BY:	JBC
DRAWN BY:	BDR
REVIEWED BY:	JBC
PROJECT MANAGER:	NWC
PROJECT NUMBER:	FSB2020-332-06
SHEET TITLE:	DETAILS
ISSUE DATE:	JUNE 15, 2026
SHEET NUMBER:	AE501

6/16/2026 1:14:28 PM
Autodesk Docs://Wisconsin ANG - Alert Parking 8033/4_Arch_R23T25.rvt

DOOR SCHEDULE

MARK	DOOR SIZE WD	DOOR SIZE HGT	DOOR SIZE THK	DOOR TYPE	FIRE RATING	FRAME TYPE	FRAME DETAIL HEAD	FRAME DETAIL JAMB	FRAME DETAIL SILL	NOTES
100A	24'-0"	10'-0"	3/4"	OCDX	- -		B2/AE501	B1/AE51		DOOR SHALL BE HARD WIRED WITH NETWORKING CAPABILITIES WITH AN RJ45 JUCS
100B	3'-0"	7'-0"	1 3/4"	SFX		S2	A1/AE501	A2 & A4/AE501	B4/AE501	
100C	3'-0"	7'-0"	1 3/4"	SFX		S2	B2/AE501	A2 & A4/AE501	B4/AE501	
102A	12'-0"	10'-0"	3/4"	OCDX	- -		A1/AE501	B1/AE501		DOOR SHALL BE HARD WIRED WITH NETWORKING CAPABILITIES WITH AN RJ45 JUCS
102B	3'-0"	7'-0"	1 3/4"	SFX		S2	B2/AE501	A2 & A4/AE501	B4/AE501	
102C	3'-0"	7'-0"	1 3/4"	SFX		S2	B2/AE501	A2 & A4/AE501	B4/AE501	

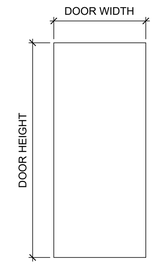

SFX STEEL, EXT

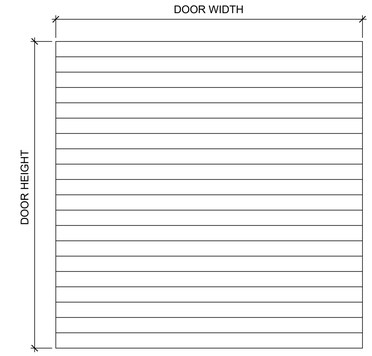

OCDX OVERHEAD COILING DOOR, EXT

ARCHITECTURAL DOOR TYPES

SCALE: NTS

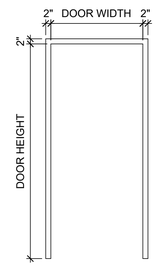

S2 STEEL

FRAME TYPES

SCALE: NTS

5801 Broadway Extension, Suite 500
Oklahoma City, OK 73118-7436
405.840.2931 | fsb-ae.com

WISCONSIN
JASON T. HOLUBY
A-13101
OKLAHOMA CITY
OK
ARCHITECT
6/15/2026

115TH FIGHTER WING

Construct Alert GOV Parking Shelters

Truax Field, Madison, Wisconsin

REVISION HISTORY:

△	DESCRIPTION	DATE

PROJECT INFORMATION:

DESIGNED BY:	JBC
DRAWN BY:	BDR
REVIEWED BY:	JBC
PROJECT MANAGER:	NWC

PROJECT NUMBER: FSB2020-332-06

SHEET TITLE: **SCHEDULES**

ISSUE DATE: JUNE 15, 2026

SHEET NUMBER: AE600

6/16/2026 11:32:07 AM
Autodesk Docs://Wisconsin ANG - Alert Parking 00324_Arch_R23T25.rvt

ELECTRICAL LEGEND

SYMBOL	DESCRIPTION
	LIGHT FIXTURES
	WALL WASHER
	WALL WASHER EMERGENCY
	RECESSED DOWN LIGHT
	RECESSED DOWN LIGHT EMERGENCY
	SURFACE
	SURFACE EMERGENCY
	SUSPENDED
	INCANDESCENT TRACK LIGHT
	TRACK LIGHT WITH INTEGRAL BALLAST
	WALL MOUNTED LIGHT
	WALL MOUNTED EMERGENCY
	STRIP LIGHT FIXTURE
	STRIP LIGHT FIXTURE W/ EMERGENCY BATTERY PACK
	RECESSED LIGHT FIXTURE
	RECESSED LIGHT FIXTURE EMERGENCY
	SUSPENDED LIGHT FIXTURE
	SUSPENDED LIGHT FIXTURE EMERGENCY
	SURFACE MOUNTED LIGHT FIXTURE
	SURFACE MOUNTED LIGHT FIXTURE EMERGENCY
	WALL MOUNTED LIGHT - ROUND
	WALL MOUNTED LIGHT - ROUND EMERGENCY
	WALL MOUNTED LIGHT - SQUARE
	WALL MOUNTED LIGHT - SQUARE EMERGENCY
	WALL MOUNTED SINGLE SIDE EXIT LIGHT
	WALL MOUNTED DOUBLE SIDE EXIT LIGHT
	CEILING MOUNTED SINGLE SIDE EXIT LIGHT
	CEILING MOUNTED DOUBLE SIDE EXIT LIGHT
	COMBINATION FAN - LIGHT
EB	BATTERY POWERED EMERGENCY LIGHT
EB	BATTERY POWER FOR REMOTE HEAD
	REMOTE HEAD
	FLOOD LIGHT
	SITE LIGHTING FIXTURE
	BOLLARD
	LIGHTING DEVICES
LC	LIGHTING CONTACTOR
$MD	OCCUPANCY SENSOR MOTION DETECTOR - CEILING MOUNTED
PMD	OCCUPANCY SENSOR MOTION DETECTOR - POWER PACK / CONTROL RELAY

SYMBOL	DESCRIPTION
	LIGHTING DEVICES
$	SINGLE POLE SWITCH
$2	TWO POLE SWITCH
$3	THREE WAY SWITCH
$4	FOUR WAY SWITCH
$DM	DIMMER SWITCH
$MD	MOTION DETECTOR - WALL MOUNTED SWITCH
$WP	WEATHER PROOF SWITCH
$2MD	DUAL RELAY PIR OCCUPANCY SENSOR
$K	KEY OPERATED SWITCH
$V	LOW VOLTAGE SWITCH
J	JUNCTION BOX
	ELECTRICAL FIXTURES
	RECEPTACLE DUPLEX
C	RECEPTACLE - COUNTER TOP
GFI	RECEPTACLE - GROUND FAULT INTERRUPTER
C GFI	RECEPTACLE - COUNTER TOP/ GROUND FAULT INTERRUPTER
WP GFI	RECEPTACLE - WEATHERPROOF GROUND FAULT INTERRUPTER
IG	RECEPTACLE - ISOLATED GROUND
SP	RECEPTACLE - SURGE PROTECTOR
WP	RECEPTACLE - WEATHERPROOF
	RECEPTACLE DUPLEX - CEILING MOUNTED
	RECEPTACLE DUPLEX - FLOOR MOUNTED
	RECEPTACLE DUPLEX - HALF SWITCHED
	RECEPTACLE DUPLEX - HIGH VOLTAGE
	RECEPTACLES - SPECIAL PURPOSE (SEE KEYNOTES FOR TYPE)
	RECEPTACLES - SPECIAL PURPOSE (SEE KEYNOTES FOR TYPE)
	SIMPLEX RECEPTACLE
	SIMPLEX RECEPTACLE - FLOOR
	QUADRUPLEX
	QUADRUPLEX - CEILING
	QUADRUPLEX - FLOOR
FB	FLOOR BOX
	MOTOR CONNECTION
	PUSH BUTTON - SWITCH
	2 PUSH BUTTON - SWITCH
	3 PUSH BUTTON - SWITCH
PP	POWER POLE
TP	TELECOMMUNICATIONS POWER POLE
	METER AND SOCKET BASE

SYMBOL	DESCRIPTION
	ELECTRICAL FIXTURES
$M	MANUAL MOTOR STARTER
$P	PILOT LIGHT SWITCH
R	RELAY
PC	PHOTOCELL
TV	TV OUTLET
	PIT LIGHT
CM	CONTROL MODULE
CR	CARD READER
	ELECTRICAL EQUIPMENT
J	JUNCTION BOX
J	FLOOR JUNCTION BOX
J	JUNCTION BOX
	UNFUSED DISCONNECT SWITCH
	FUSED DISCONNECT SWITCH
	DISCONNECT SWITCH FURNISHED WITH EQUIPMENT
	COMBINATION MOTOR STARTER
	MOTOR STARTER
T	TRANSFORMER
DC	DOOR CONTACT
VFD	VARIABLE FREQUENCY DRIVE
	120 / 208 VOLT PANEL BOARD
	277 / 480 VOLT PANEL BOARD
	DATA DEVICES
J D	JUNCTION BOX - DATA
	TELEPHONE
P	PUBLIC TELEPHONE
W	WALL TELEPHONE
	TELEPHONE / DATA OUTLET
	DATA OUTLET
S	DOUBLE SIDED CLOCK
	TELEPHONE OUTLET FLOOR
	TELEPHONE/DATA OUTLET FLOOR
	DATA OUTLET FLOOR
	DATA OUTLET CEILING
	TELEPHONE/DATA OUTLET CEILING
S	SPEAKER - SURFACE MOUNTED OR SUSPENDED
SR	SPEAKER - RECESSED
	WALL SPEAKER
MP	MICROPHONE
	BUZZER
IR	INFRARED MOTION SENSOR

SYMBOL	DESCRIPTION
	DATA DEVICES
	CLOSED CIRCUIT TV CAMERA
TV	TV OUTLET
A	AMPLIFIER
BMS	BALANCED MAGNETIC SWITCH
BG	BREAK GLASS SENSOR
CCTV	CLOSED CIRCUIT TV MONITOR
CM	CONTROL MODULE
CR	CARD READER
DA	DURESS ALARM PUSH BUTTON
DM	DIGITAL METER
DL	DOOR LOCK
EP	EXIT PUSH BUTTON
FB	FLOOR BOX
IC	INTERCOM PUSH BUTTON FOR 2-WAY COMMUNICATION
K	KEY PAD WITH ARM / DISARM
S	MAGNETIC SWITCH
MD	MOTION DETECTOR (SECURITY)
RTE	REQUEST TO EXIT PUSH BUTTON
E	NURSE CALL
N	NURSE STATION
	NURSE CALL DOME LIGHT
SCC	SECURITY CONTROL CONSOLE
TC	TIME CLOCK
W	WIRELESS ROUTER
	TV ANTENNA
	ANTENNA
	SINGLE SIDED CLOCK
	DOUBLE SIDED CLOCK
	CABLE TRAY

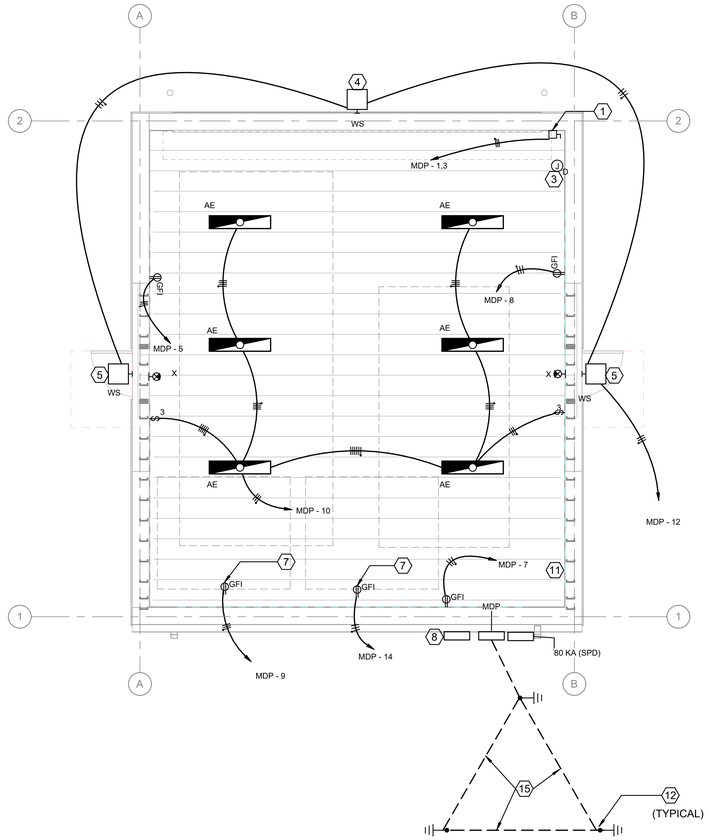

ALERT MAINTENANCE SHELTER ELECTRICAL PLAN

C1 SCALE: 1/4" = 1'-0"

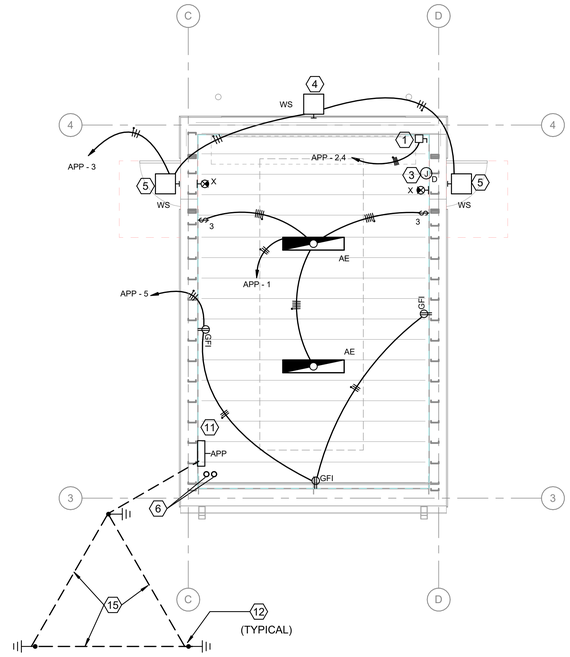

ALERT PILOT PARKING SHELTER ELECTRICAL PLAN

C3 SCALE: 1/4" = 1'-0"

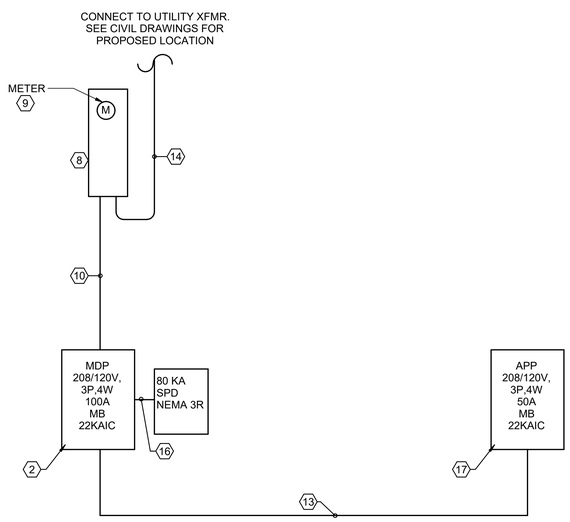

ONE-LINE DIAGRAM

A1 SCALE: NTS

GENERAL NOTES

A. UTILITY COMPANY IS RESPONSIBLE FOR PRIMARY SIDE OF TRANSFORMER CONDUIT AND CONDUCTORS, TRANSFORMER, TRANSFORMER PAD, SECONDARY SIDE OF TRANSFORMER CONDUIT, CONDUCTORS AND FINAL TERMINATIONS IN CT CABINET. CONTRACTOR IS RESPONSIBLE FOR COORDINATING WITH OWNER AND UTILITY COMPANY FOR LOCATION OF NEW UTILITY PROVIDED PAD MOUNT TRANSFORMER.
B. REFER TO CIVIL DRAWINGS FOR PROPOSED LOCATION OF SERVICE TRANSFORMER AND SECONDARY SIDE CONDUIT. UTILITY COMPANY IS RESPONSIBLE FOR SECONDARY SIDE CONDUIT AND CONDUCTOR ROUTING.
C. CONTRACTOR IS RESPONSIBLE FOR FIELD VERIFICATIONS OF SITE PRIOR TO BID.
D. ROUTING OF RACEWAYS FROM MAINTENANCE BUILDING TO ALERT PARKING WILL REQUIRE TRENCHING. COMPACT BACKFILL TO 95% USING 6" LIFTS. ENCASE RACEWAY WITH 3" OF 3000 LB CONCRETE MINIMUM.
E. ALL EXTERIOR LIGHTING SHALL BE CONTROLLED BY A LIGHTING CONTACTOR LOCATED IN THE INTERIOR OF BOTH BUILDINGS, THE CONTACTOR SHALL INCLUDE TIMER, PHOTOCELL AND HOA SWITCH. MOUNT THE PHOTOCELL ON THE ROOF.
F. PROVIDE GROUND NEUTRAL BOND AT PANEL MDP. SIZE AS PER NATIONAL ELECTRICAL CODE.
G. PROVIDE BONDING JUMPER FROM BUILDING GROUND TO BUILDING STEEL. SIZE AS PER NATIONAL ELECTRICAL CODE.
H. REFER TO SHEET E-102 FOR LIGHT FIXTURE DETAILS.
I. EXIT LIGHT SHALL BE POWERED FROM NEAREST NON SWITCHED LIGHTING CIRCUIT.
J. MOUNTING HEIGHT OF LIGHT FIXTURES TO BE AS FOLLOWS:
TYPE A1 - 9' 6" AFF TO BOTTOM OF FIXTURE.
TYPE WS - AS NOTED
TYPE X - 8' 0" AFF TO BOTTOM OF FIXTURE

SHEET KEYNOTES

1. 240V, 30A, NEMA 3R, NF DISCONNECT FOR COIL DOOR.
2. PROVIDE BONDING JUMPER BETWEEN GROUND AND NEUTRAL AT SERVICE ENTRANCE PANEL AS REQUIRED BY THE NATIONAL ELECTRICAL CODE.
3. RUN 2" CONDUIT UNDERGROUND FROM JBOX TO TELECOMMUNICATIONS MANHOLE. CONDUIT FOR ACA ALARM CONNECTION IN BUILDING 402. ROUTING SHOWN ON CIVIL SHEETS. REFER TO C601.
4. MOUNT 11' 6" AFF.
5. MOUNT 7' 8" AFF.
6. (2)-1-1/2" CONDUITS FROM PANEL MDP. EXTEND ONE CONDUIT TO PANEL APP. STUB UP AND CAP OTHER CONDUIT +6" AFF. REFER TO CIVIL DRAWINGS FOR ROUTING OF CONDUITS BETWEEN BUILDINGS.
7. RECEPTACLE TO POWER MOTOR LIFT. COORDINATE EXACT LOCATION WITH LIFT MOTOR INSTALLER.
8. FOR NEW UNDERGROUND SERVICE PROVIDE A CFCI MGE APPROVED 200A, NEMA 3R METER SOCKET FOR WITH JAW-RELEASING LEVER, USE A SEVEN-TERMINAL METER PEDESTAL OR PER CURRENT MGE LATEST METERING GUIDELINES. INSTALL PER MGE GUIDELINES.
9. ELECTRIC METER MGE FURNISHED MGE INSTALLED.
10. PROVIDE 4 - #1 IN 1-1/2" GRC CONDUIT ROUTED UNDERGROUND FROM METER PEDESTAL TO MDP.
11. EXTERIOR LIGHT CONTACTOR LOCATION.
12. GROUND ROD. REFER TO DETAIL C3 ON SHEET E102.
13. PROVIDE 4 - #2, 1 # 8 EG., ROUTE THROUGH ONE OF THE CONDUITS MENTIONED IN KEYNOTE 6 TO MDP.
14. SECONDARY TRANSFORMER FEED. SECONDARY FEEDS ARE THE RESPONSIBILITY OF MGE.
15. TRIAD GROUNDING . REFER TO SHEET E-102 FOR DETAILS.
16. UTILIZE LOW IMPEDANCE CABLES MADE FOR CONNECTING SPD DEVICES TO EQUIPMENT. KEEP LENGTH OF CABLES AS SHORT AS POSSIBLE. 4 #4, 1 #8 EG., 1 1/4" CONDUIT.
17. CONNECT EQUIPMENT GROUNDING CONDUCTOR OF BUILDING FEEDER TO GROUND BUS IN PANEL APP.

0 2' 4' 8'
1/4" = 1'-0"

FSB
5801 Broadway Extension, Suite 500
Oklahoma City, OK 73118-7436
405.840.2931 | fsb-ae.com

WISCONSIN JOHN T LITTLE E-47633 EDMOND OK PROFESSIONAL ENGINEER
6/15/2026

115TH FIGHTER WING

Construct Alert GOV Parking Shelters

Truax Field, Madison, Wisconsin

REVISION HISTORY:

△	DESCRIPTION	DATE

PROJECT INFORMATION:

DESIGNED BY:	GPN
DRAWN BY:	AOO
REVIEWED BY:	WCM
PROJECT MANAGER:	NWC

PROJECT NUMBER: FSB2020-332-06

SHEET TITLE: ELECTRICAL POWER PLAN

ISSUE DATE: JUNE 15, 2026

SHEET NUMBER: E-101

6/16/2026 8:28:06 AM
Autodesk Docs://Wisconsin ANG - Alert Parking /03324_Elec_Rev/E25.rvt

Branch Panel: MDP

Location: ALERT MAINTENANCE BUILDING
Supply From: PAD MOUNT TRANSFORMER
Mounting: SURFACE
Enclosure: NEMA 3R

Volts: 208Y/120
Phases: 3
Wires: 4

A.I.C. Rating: 22000
Mains Type: MAIN BREAKER
Mains Rating: 100 A
MCB Rating: 100 A

Notes:

CKT	Circuit Description	Trip	Poles	A		B		C		Poles	Trip	Circuit Description	CKT
1	COIL DOOR ALERT MAINTANANCE	20 A	2	600 VA	645 VA					3	50 A	APP	2
3	--	--	--			600 VA	783 VA			--	--	--	4
5	RECEPTACLE ALERT MAINTANANCE	20 A	1					180 VA	540 VA	--	--	--	6
7	RECEPTACLE ALERT MAINTANANCE	20 A	1	180 VA	180 VA					1	20 A	RECEPTACLE ALERT MAINTANANCE	8
9	LIFT RECEPTACLE ALERT MAINTANANCE	20 A	1			1600 VA	135 VA			1	20 A	INTERIOR LIGHTING ALERT MAINTENANCE	10
11	SPARE	20 A	1					0 VA	183 VA	1	20 A	EXTERIOR LIGHTS ALERT MAINTENANCE	12
13	SPARE	20 A	1	0 VA	1600 VA					1	20 A	LIFT RECEPTACLE ALERT MAINTANANCE	14
15	SPARE	20 A	1			0 VA	0 VA			3	60 A	80 KA (SPD)	16
17	SPARE	20 A	1					0 VA	0 VA	--	--	--	18
19	SPARE	20 A	1	0 VA	0 VA					--	--	--	20
21	SPARE	20 A	1			0 VA	0 VA			1	20 A	SPARE	22
23	SPARE	20 A	1					0 VA	0 VA	1	20 A	SPARE	24
25	SPARE	20 A	1	0 VA	0 VA					1	20 A	SPARE	26
27	SPARE	20 A	1			0 VA	0 VA			1	20 A	SPARE	28
29	SPARE	20 A	1					0 VA	0 VA	1	20 A	SPARE	30
			Total Load:	3205 VA		3119 VA		903 VA					
			Total...	30 A		29 A		8 A					

Legend:

Load Classification	Connected Load	Demand Factor	Estimated Demand	Panel Totals	
Lighting	547 VA	100.00%	547 VA		
RECEPTACLE	4280 VA	100.00%	4280 VA	**Total Conn. Load:**	7227 VA
COIL DOOR	2400 VA	85.00%	2040 VA	**Total Est. Demand:**	6867 VA
				Total Conn.:	20 A
				Total Est. Demand:	19 A

Notes:

Branch Panel: APP

Location: ALERT PARKING BUILDING
Supply From: MDP
Mounting: SURFACE
Enclosure: NEMA 1

Volts: 208Y/120
Phases: 3
Wires: 4

A.I.C. Rating: 10000
Mains Type: MAIN BREAKER
Mains Rating: 100 A
MCB Rating: 50 A

Notes:

CKT	Circuit Description	Trip	Poles	A		B		C		Poles	Trip	Circuit Description	CKT
1	INTERIOR LIGHTING ALERT PILOT...	20 A	1	45 VA	600 VA					2	20 A	COIL DOOR ALERT PILOT	2
3	EXTERIOR LIGHTS ALERT PARKING	20 A	1			183 VA	600 VA			--	--	--	4
5	RECEPTACLE ALERT PILOT	20 A	1					540 VA	0 VA	1	20 A	SPARE	6
7	SPACE WITH PROVISIONS	--	1	--	0 VA					1	20 A	SPARE	8
9	SPACE WITH PROVISIONS	--	1			--	--			1	--	SPACE WITH PROVISIONS	10
11	SPACE WITH PROVISIONS	--	1					--	--	1	--	SPACE WITH PROVISIONS	12
			Total Load:	645 VA		783 VA		540 VA					
			Total...	6 A		7 A		5 A					

Legend:

Load Classification	Connected Load	Demand Factor	Estimated Demand	Panel Totals	
Lighting	228 VA	100.00%	228 VA		
RECEPTACLE	540 VA	100.00%	540 VA	**Total Conn. Load:**	1968 VA
COIL DOOR	1200 VA	85.00%	1020 VA	**Total Est. Demand:**	1788 VA
				Total Conn.:	5 A
				Total Est. Demand:	5 A

Notes:

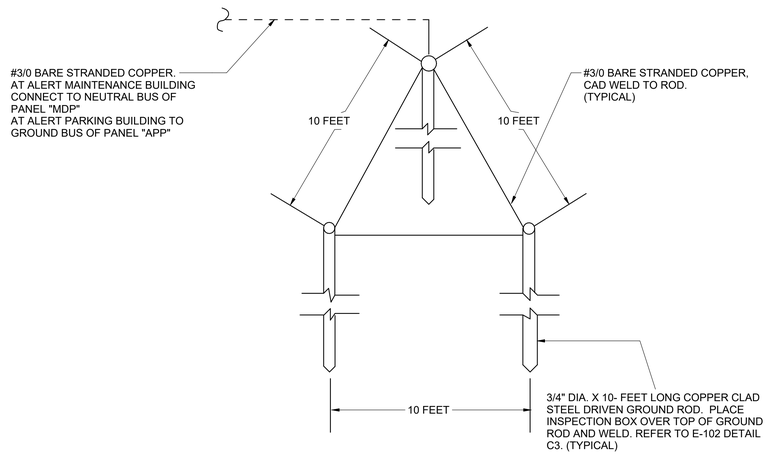

A1 TYPICAL TRIAD GROUNDING DETAIL
SCALE: NTS

LUMINAIRE REQUIREMENTS

1. **FIXTURE STYLE**
   A. 48" LED LINEAR SUSPENDED
2. **CONSTRUCTION**
   A. CHANNEL AND COVER ARE FORMED FROM CODE-GAUGE COLD-ROLLED STEEL.
   B. HOUSING AND LENS ENDCAPS ARE INJECTION MOLDED PLASTIC.
   C. ENDCAPS WITH A 7/8" KNOCK OUT FOR CONTINUOUS MOUNTING.
   D. FINISH: HIGH-GLOSS, BAKED WHITE POLYESTER WITH IRON PHOSPHATE PRE-TREATMENT FOR PAINT ADHESION AND RUST RESISTANCE.
3. **OPTICS**
   A. WIDE DIFFUSE ACRYLIC LENS.
   B. NO LOUVER.
4. **ELECTRICAL**
   A. HIGH-OUTPUT LEDS INTEGRATED ON A TWO-LAYER CIRCUIT BOARD FOR COOLRUNNING OPERATION.
   B. ELECTRONIC LED DRIVER WITH MULTI-VOLT (120V OR 277V) INPUT AND 0-10V DIMMING TO 10%.
   C. POWER CONSUMPTION OF 20.32W.
   D. DESIGNED TO WITHSTAND A MAXIMUM LINE SURGE OF 2.5KV AT 0.75KA COMBINATION WAVE FOR INDOOR LOCATIONS.
   E. 40 DEGREE C AMBIENT TEMPERATURE RATING.
5. **LED LIGHT SOURCE**
   A. NOMINAL LUMEN RATING OF 3000LM (3104 LUMENS DELIVERED).
   B. COLOR TEMERATURE OF 3500K.
   C. 80 CRI
   D. L70>100,000 HOURS AT 25˚C.
6. **INSTALLATION**
   A. PENDANT MOUNTED.
7. **LISTINGS**
   A. CSA CERTIFIED TO US AND CANADIAN SAFETY STANDARDS.
   B. FOR USE IN DAMP LOCATIONS BETWEEN -4°F(-20°C) AND 104°F (40°C).
8. **EMERGENCY**
   A. EMERGENCY COLD WEATHER BATTERY PACK,10W LINEAR CONSTANT POWER, CERTIFIED IN CA TITLE 20 MAEDBS.
   B. SURGE PROTECTION DEVICE, PROVIDES UP TO 6KV PROTECTION
9. **WARRANTY**
   A. 10 YEAR MINIMUM WARRANTY.

D3 FIXTURE TYPE AE DETAIL
SCALE: NTS

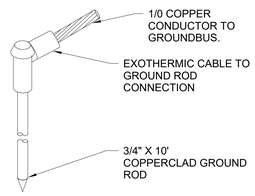

C3 TYPICAL GROUND ROD DETAIL
SCALE: NTS

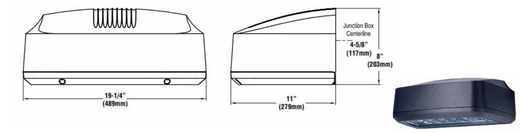

LUMINAIRE REQUIREMENTS

1. **FIXTURE STYLE**
   A. LED WALL PACK
2. **CONSTRUCTION**
   A. DIE CAST ALUMINUM HOUSING SMOOTHLY CONTOURED INTO RECTANGULAR SHAPE.
   B. ELECRO-ZINC PLATED STEEL MOUNTING BODY
   C. EXTRUDED SILICONE GASKET. PROVIDE CONDUCTORS WITH EPDM BUSHING
3. **OPTICS**
   A. ULTRA HIGH EFFICIENCY REFLECTORS . WIDE THROW DISTRIBUTION.
4. **ELECTRICAL**
   A. TWO STAGE SURGE PROTECTION BUILT INTO DRIVER TO MEET IEEE C62.41.2-2002
   B. UNIVERSAL INPUT VOLTAGE 120-277V
   C. INPUT POWER ; 55W
   D. **DRIVER** COMPONENTS ENCASED FOR IP 65 MOISTURE RESISTANCE.
   E. 0-10V DIMMING .
   F. INTEGRAL PHOTOCELL FOR CONTROL.
5. **LED LIGHT SOURCE**
   A. NOMINAL LUMEN RATING OF 4800LM DELIVERED LUMENS OF 4791.
   B. COLOR TEMPERATURE OF 4000K.
   C. 70 CRI
   D. L60>100,000 HOURS AT -40˚F TO 122˚F .
6. **INSTALLATION**
   A. WALL MOUNTED WITH THE AID OF GALVANIZED STEEL UNIVERSAL WALL MOUNTING PLATE THAT EASILY MOUNTS TO SQUARE JUNCTION BOX. EPDM GASKET TO HELP SEAL OFF WATER FROM JUNCTION BOX.
7. **LISTINGS**
   A. ETL LISTED
   B. UL LISTED.
8. **EMERGENCY CIRCUIT**
   A. 90 MINUTE EMERGENCY BATTERY PACK. COLD WEATHER RATED.
9. **WARRANTY**
   A. 10 YEAR MINIMUM WARRANTY.

D5 FIXTURE TYPE WS DETAIL
SCALE: NTS

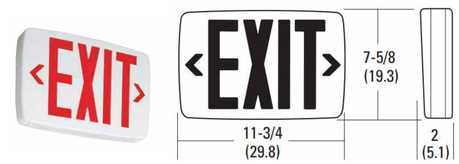

1. **FIXTURE STYLE**
   A. 1" X 8 " SINGLE SIDED EXIT LIGHT.
2. **CONSTRUCTION**
   A. ENGINEERING GRADE IMPACT AND SCRATCH RESISTANT THERMOPLASTIC HOUSING.
   B. CORROSION PROOF HOUSING.
   C. UV STABLE HOUSING TO AVOID DISCOLORATION FROM SUNLIGHT OR MAN-MADE LIGHT SOURCES.
   D. UNIBODY HOUSING ABLE TO SNAP TOGETHER WITH NO ADDITIONAL FASTENERS. INTERCHANGEABLE FACEPLATE AND BACK COVER.
   E. UNIFORM ILLUMINATION WITHOUT SHADOWS OR HOTSPOTS.
3. **INSTALLATION**
   A. UNIVERSAL MOUNTING FOR TOP OR END MOUNT WITH BACK MOUNT OPTION FOR SINGLE FACE.
4. **CERTIFICATION**
   A. UL94V-0 FLAME RATING.
   B. UL DAMP LOCATION LISTED (50 DEGREES) – (104 DEGREES) FAHRENHEIT.
   C. MEETS UL924.
   D. NFPA 101 LIFE SAFETY CODE.
   E. NECA AND OSHA ILLUMINATION STANDARDS
5. **LED SOURCE & DRIVER**
   A. POWER CONSUMPTION: 1 WATT OR LESS.
   B. VOLTAGE: 120V – 277V.
6. **EMERGENCY BATTERY PACK**
   A. MAINTENANCE FREE NICKEL CADMIUM BATTERY, WITH NOT LESS THAN 90 MINUTES OF EMERGENCY POWER.
   B. INTEGRAL TEST SWITCH AND STATUS BAR INDICATOR.
   C. IN ADDITION CONNECT FIXTURE TO INVERTER CIRCUIT
7. **WARRANTY**
   A. 10 YEAR MINIMUM WARRANTY.

B5 FIXTURE TYPE X DETAIL
SCALE: NTS

FSB
5801 Broadway Extension, Suite 500
Oklahoma City, OK 73118-7436
405.840.2931 | fsb-ae.com

WISCONSIN
JOHN T LITTLE
E-47633
EDMOND OK
PROFESSIONAL ENGINEER
6/15/2026

115th FIGHTER WING

Construct Alert GOV Parking Shelters
Truax Field, Madison, Wisconsin

REVISION HISTORY:

△	DESCRIPTION	DATE

PROJECT INFORMATION:

DESIGNED BY:	GPN
DRAWN BY:	GPN
REVIEWED BY:	WCM
PROJECT MANAGER:	NWC
PROJECT NUMBER:	FSB2020-332-06
SHEET TITLE:	ELECTRICAL DETAILS AND PANEL SCHEDULE
ISSUE DATE:	JUNE 15, 2026
SHEET NUMBER:	E-102

6/16/2026 8:28:06 AM
Autodesk Docs://Wisconsin ANG - Alert Parking 003324_Elec_Rev/25.rvt