U.S. DEPARTMENT OF AGRICULTURE
FOREST SERVICE
REGION ONE

CONSTRUCTION/RECONSTRUCTION PLANS FOR SPECIFIED ROADS

POWERHOUSE AREA ROADS

KOOTENAI NATIONAL FOREST
LIBBY RANGER DISTRICT
LINCOLN COUNTY, MONTANA

SHEET INDEX

PROJECT: 1-24212
DATE: 2/24/2025

Sheet List Table

Sheet Number	Sheet Title
1	COVER
2	PROJECT MAP
3	SUMMARY OF QUANTITIES & GENERAL NOTES
4	TYPICAL SECTIONS
5	CULVERT DETAIL
6	CULVERT WITH CATCH BASIN DETAIL
7	CATCH BASIN DETAIL
8	DRAIN DIP & SIGNING DETAILS
9	SURFACE WATER DEFLECTOR DETAILS
10	CURVE WIDENING
11	ALEXANDER PIT
W1-W17	WORKLISTS

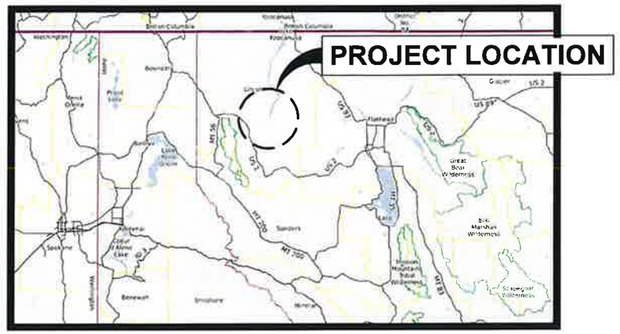

MONTANA / IDAHO INDEX MAP
NO SCALE

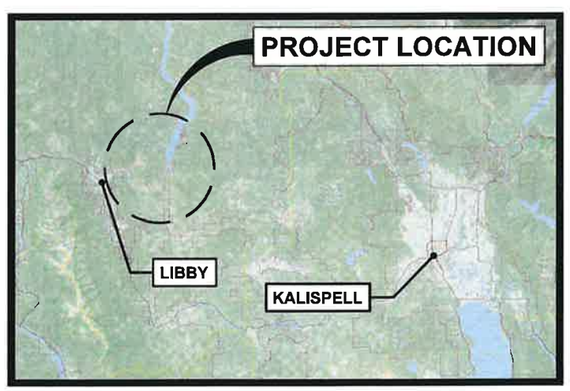

LOCATION MAP
NO SCALE

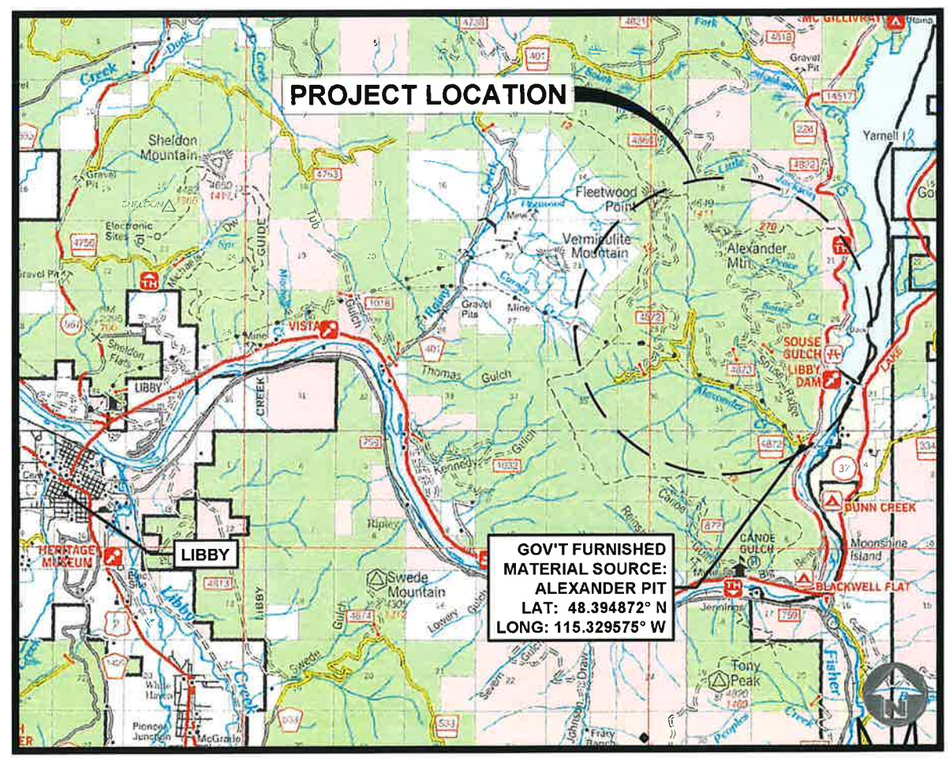

AREA MAP
NO SCALE

DESIGNED BY:
CHRIS ACKERMAN — Digitally signed by CHRIS ACKERMAN Date: 2025.05.14 11:24:59 -07'00'
PROJECT ENGINEER
KOOTENAI NATIONAL FOREST
DATE

RECOMMENDED BY:
NATHAN GASSMANN — Digitally signed by NATHAN GASSMANN Date: 2025.05.14 16:15:00 -06'00'
DISTRICT RANGER
KOOTENAI NATIONAL FOREST
DATE

Digitally signed by KENNETH WICKWARD Date: 2025.05.14 15:56:57 -06'00'
FOREST ENGINEER
KOOTENAI NATIONAL FOREST
DATE

APPROVED BY:
FOREST SUPERVISOR
KOOTENAI NATIONAL FOREST
5/16/2025
DATE

NO.	REVISION DESCRIPTION	BY	DATE
△			
△			
△			
△			
△			
△			

SET NO.

SHEET NO.
1

C:\Users\kemeredith\Desktop\CADD Files\Sheets\1-24212-AC-01-Cover.dwg

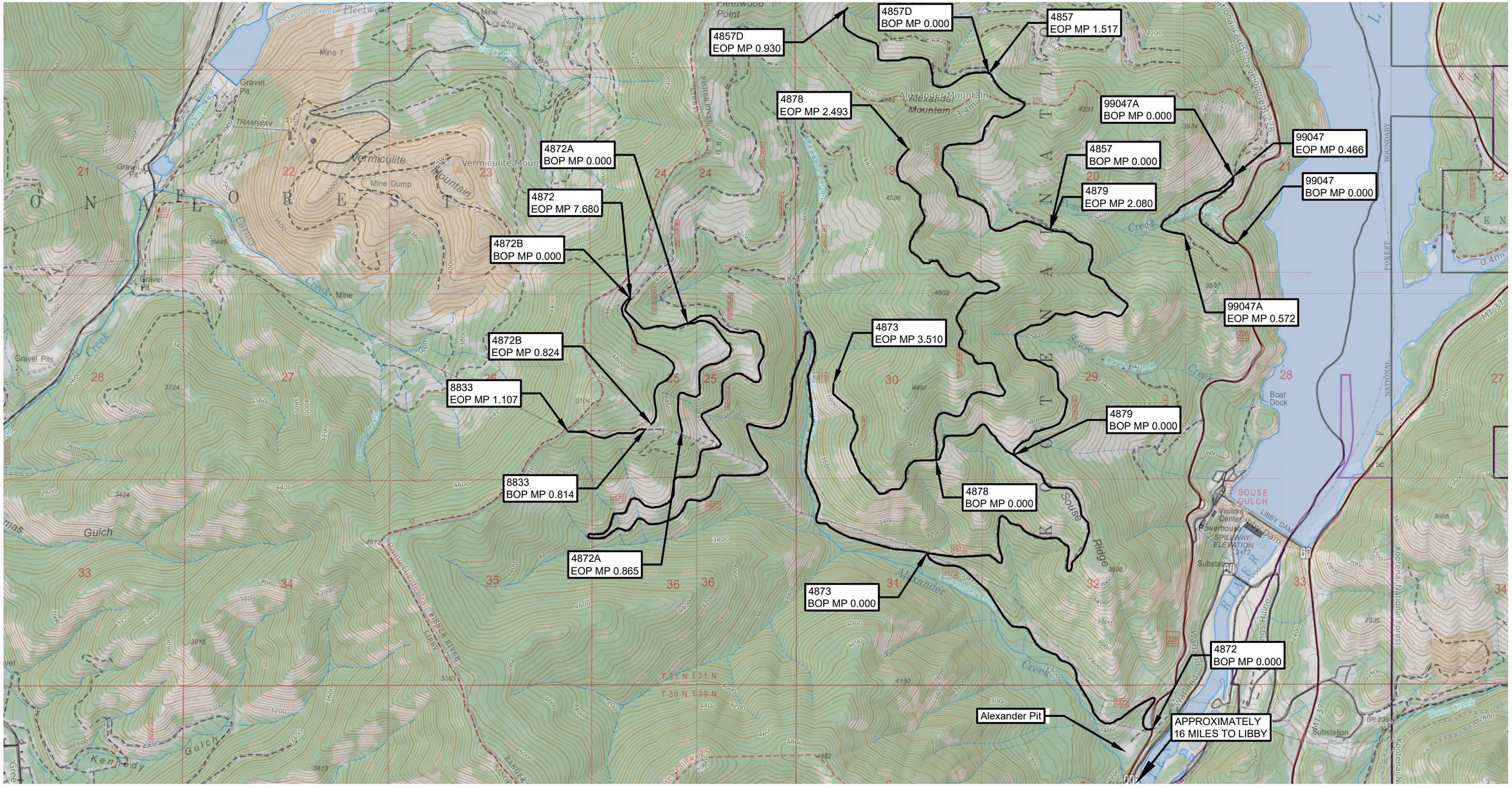

PROJECT MAP

0 1250 2500
SCALE IN FEET

9/28/18 07:07 MARKL F:_CAD STANDARDS\AGENCY STANDARDS\FOREST SERVICE\NFS-CTB.DWG;

United States Department of Agriculture Forest Service	NORTHERN REGION REGION ONE	PROJECT NAME POWERHOUSE AREA ROADS KOOTENAI NATIONAL FOREST LIBBY RANGER DISTRICT	DRAWING TITLE PROJECT MAP	DATE 2/24/2025	DESIGNER KM	CHECKED CA
				NO. / REVISION DESCRIPTION / BY / DATE	DWG SHEET NO. 2	SHEET 2 OF 11

Power House Area Roads		ROAD NO.	4857	4857D	4872	4872A	4872B	4873	4878	4879	8833	99047	99047A	Option 1	Option 2	Option 3	Option 4
		MILES	1.517	0.930	7.680	0.865	0.824	3.510	2.493	2.080	0.293	0.466	0.572				
		RECON/CON	RECON	RECON	RECON	RECON	RECON	RECON	RECON	RECON	RECON	RECON	RECON				
ITEM NO	DESCRIPTION	UNITS	SUMMARY OF QUANTITIES														
15101	MOBILIZATION	LUMP SUM	ALL	ALL	ALL	ALL	ALL	ALL	ALL	ALL	ALL	ALL	ALL				
15101A	MOBILIZATION, PIT DEVELOPMENT AND CRUSHING	LUMP SUM												ALL			
20103	CLEARING AND GRUBBING, DISPOSAL METHOD (K)	MILE		0.93					0.26		0.38						
20209	SELECTIVE CLEARING, TYPE ROADSIDE, DISPOSAL METHOD (F)	MILE			4.26					2.08							
20210	SPECIAL CLEARING AND GRUBBING, TYPE ROADWAY, DISPOSAL METHOD (K), COMPACTION METHOD (5)	MILE	1.52		1.21	0.87	0.82	3.51	2.23			0.47	0.57				
20302A	REMOVAL OF CULVERT, DISPOSAL METHOD (A), COMPACTION METHOD (5)	EACH			5.00		1.00										
20302B	REMOVAL OF SURFACE WATER DEFLECTOR, DISPOSAL METHOD (A), COMPACTION METHOD (5)	EACH	1.00		3.00												
20415	EMBANKMENT CONSTRUCTION, COMPACTION METHOD (3), TOLERANCE CLASS (A)	CUBIC YARD*											12.00				
20420	DRAINAGE EXCAVATION, TYPE ROADSIDE DITCH, TOLERANCE CLASS (A), COMPACTION METHOD (5)	FOOT			50.00												
20421A	DRAINAGE EXCAVATION, TYPE CATCH BASIN, TOLERANCE CLASS (A), COMPACTION METHOD (5)	EACH			2.00												
20421B	DRAINAGE EXCAVATION, RECONDITION DRAIN DIP TYPE II, TOLERANCE CLASS (A), COMPACTION METHOD (3)	EACH	3.00		22.00	2.00		7.00	11.00	4.00		5.00	4.00				
21201	LINEAR GRADING, COMPACTION METHOD (3), DISPOSAL METHOD (F)	MILE		0.93					0.26		0.38						
25101	PLACED RIPRAP, CLASS 3	CUBIC YARD*											14.00				
30106	SCREENED AGGREGATE, GRADING O, COMPACTION METHOD (A)	CUBIC YARD*			35.00			15.00									
30207	ROADWAY AGGREGATE, COMPACTION METHOD (A)	CUBIC YARD*			85.00		10.00	20.00		10.00							
31401	STOCKPILED AGGREGATE, SECTION 301 SURFACE COURSE AGGREGATE, GRADING F, GOV'T FURNISHED MATERIAL SOURCE, SLASH DISPOSAL METHOD K	CUBIC YARD*													10000.00		10000.00
31401A	STOCKPILED AGGREGATE, SECTION 301 SUBBASE COURSE AGGREGATE, GRADING A, GOV'T FURNISHED MATERIAL SOURCE, SLASH DISPOSAL METHOD K	CUBIC YARD*														5000.00	
30315	ROADWAY RECONDITIONING, COMPACTION METHOD (4)	MILE	1.52		7.68	0.87	0.82	3.51	2.23	2.08		0.47	0.57				
60201	18 INCH PIPE CULVERT, CORRUGATED STEEL, 16 GAGE, COMPACTION METHOD (6)	FOOT			216.00		36.00										
60212	SURFACE WATER DEFLECTOR, COMPACTION METHOD (6)	FOOT	24.00		71.00												
60708	CLEANING CULVERTS IN PLACE	EACH			2.00												
62550	TURF ESTABLISHMENT, DRY METHOD SEEDING, DRY METHOD MULCHING, GOV'T FURNISHED SEED	ACRE	0.65	0.34	4.00	0.32	0.40	1.28	0.10	0.76	0.43	0.17	0.31				
63301	SIGN SYSTEM	EACH			7.00			3.00				1.00					
63311	REMOVE SIGN, DISPOSAL METHOD (A)	EACH			9.00			2.00									

Page 1

GENERAL NOTES:

1) CONSTRUCT THE PROJECT IN COMPLIANCE WITH FEDERAL HIGHWAY ADMINISTRATION STANDARD SPECIFICATIONS FOR CONSTRUCTION OF ROADS AND BRIDGES ON FEDERAL HIGHWAY PROJECTS (FP-14) AND APPLICABLE FOREST SERVICE SUPPLEMENTAL SPECIFICATIONS (FSSS).

2) CONSERVE ROCK FROM CULVERT EXCAVATIONS AND PLACE AS RIPRAP ARMORING AT THE INLETS AND OUTLETS. UNLESS RIPRAP QUANTITIES ARE SPECIFIED THIS WORK IS CONSIDERED INDIRECT TO THE CULVERT INSTALLATION AND NOT MEASURED FOR PAYMENT.

3) IF DISPOSAL METHOD K (PILING) IS SPECIFIED, PILES SHALL BE A MAXIMUM HEIGHT OF 8 FEET. ALL MATERIAL EXTENDING MORE THAN 5 FEET BEYOND THE OUTSIDE PERIMETER OF THE PILE SHALL BE SEVERED AND RETURNED TO THE PILE.

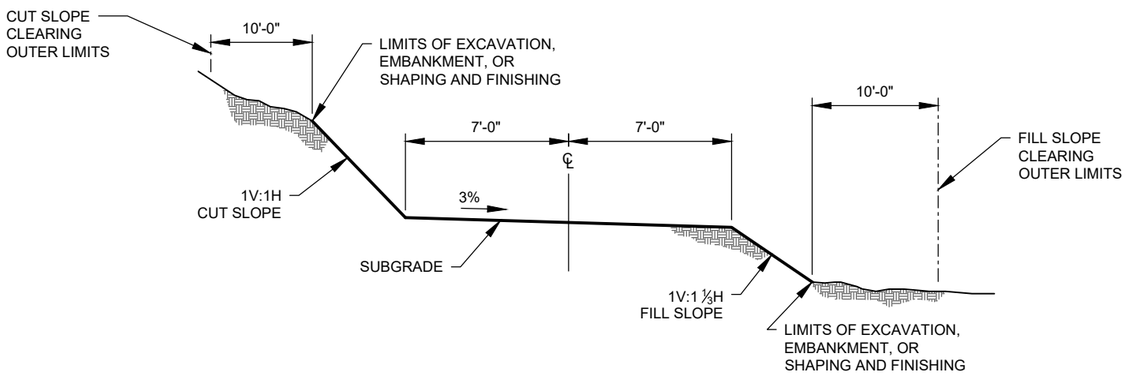

TYPICAL SECTION 1

NOT TO SCALE

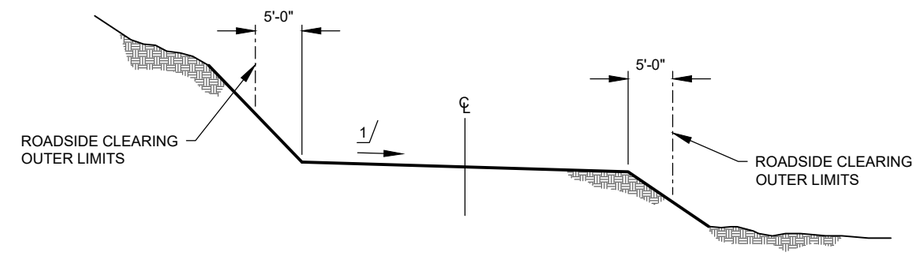

ROADSIDE CLEARING AND ROAD RECONDITIONING

NOT TO SCALE

1/ INSLOPE, OUTSLOPE, OR CROWN WHEN SPECIFIED IN THE WORKLIST. OTHERWISE MAINTAIN EXISTING.

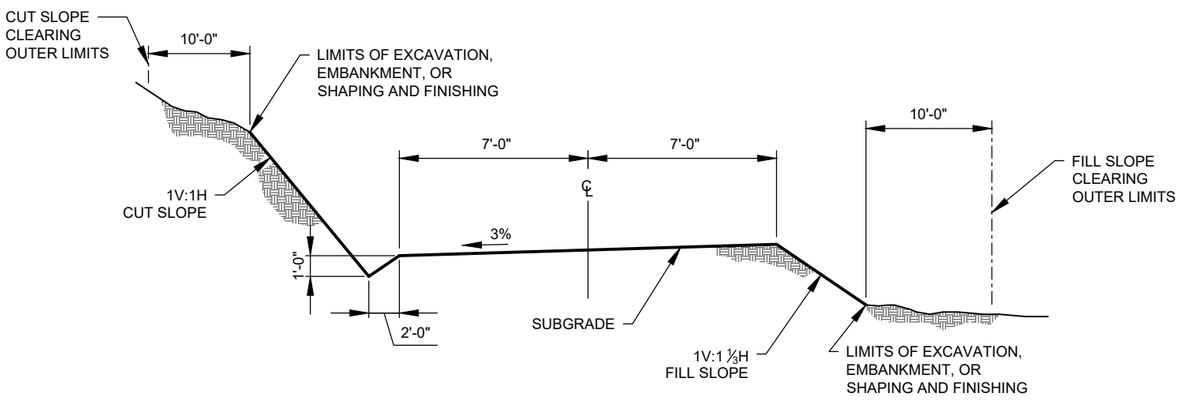

TYPICAL SECTION 2

NOT TO SCALE

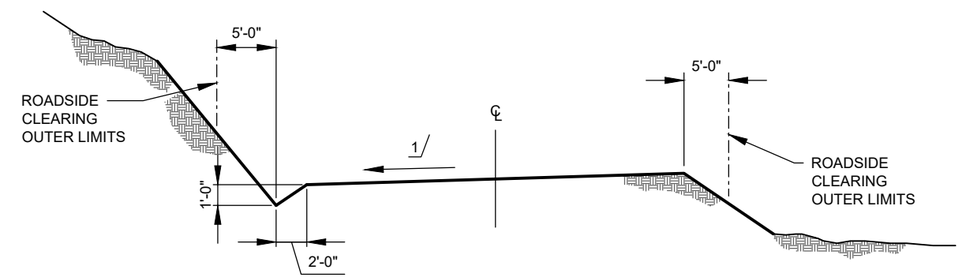

ROADSIDE CLEARING AND ROAD RECONDITIONING W/DITCH

NOT TO SCALE

*TYPICAL SECTION ROAD WIDTHS - ROAD WIDTH SHOWN IS CONSIDERED GENERAL ROAD WIDTH FOR THE TYPICAL SECTION. HOWEVER ADDITIONAL WIDTH MAY BE NECESSARY THROUGH SEGMENTS OF ROAD. ADDITIONAL WIDTH MAY INCLUDE:

- CURVE WIDENING TO ACCOMMODATE TRUCK OFF-TRACKING - EXTRA WIDTH FOR CURVE WIDENING WILL BE STAKED ON THE GROUND AND/OR SHOWN IN THE PLANS OR WORKLISTS.
- TURNOUT AND TURNAROUNDS - EXTRA WIDTH FOR TURNOUT AND TURNAROUNDS WILL BE STAKED ON THE GROUND AND/OR SHOWN IN THE PLANS OR WORKLISTS.
- WASTE SITES - EXTRA WIDTH FOR WASTE SITES WILL BE STAKED ON THE GROUND AND/OR SHOWN IN THE PLANS OR WORKLISTS. WIDTH FOR WASTE SITES MAY VARY AS THE QUANTITY OF EXCESS MAY VARY BECAUSE OF CONSTRUCTION TOLERANCES.
- FILL SLOPE WIDENING - FILL SLOPE WIDENING SHALL BE APPLIED DURING CONSTRUCTION. IF A CONSTRUCTED FILL SLOPE IS GREATER THAN 3' IN VERTICAL HEIGHT ADD 1' OF WIDTH TO THE ROAD. IF A CONSTRUCTED FILL SLOPE IS GREATER THAN 6' IN VERTICAL HEIGHT ADD 2' OF WIDTH TO THE ROAD.

9/28/18 07:07 MARKL F:_CAD STANDARDS\AGENCY STANDARDS\FOREST SERVICE\NFS-CTB.DWG;

United States Department of Agriculture Forest Service	NORTHERN REGION REGION ONE	PROJECT NAME POWERHOUSE AREA ROADS KOOTENAI NATIONAL FOREST LIBBY RANGER DISTRICT	DRAWING TITLE TYPICAL SECTIONS	DATE 2/24/2025	DESIGNER KM	CHECKED CA
				NO. / REVISION DESCRIPTION / BY / DATE	DWG SHEET NO. 4	SHEET 4 OF 11

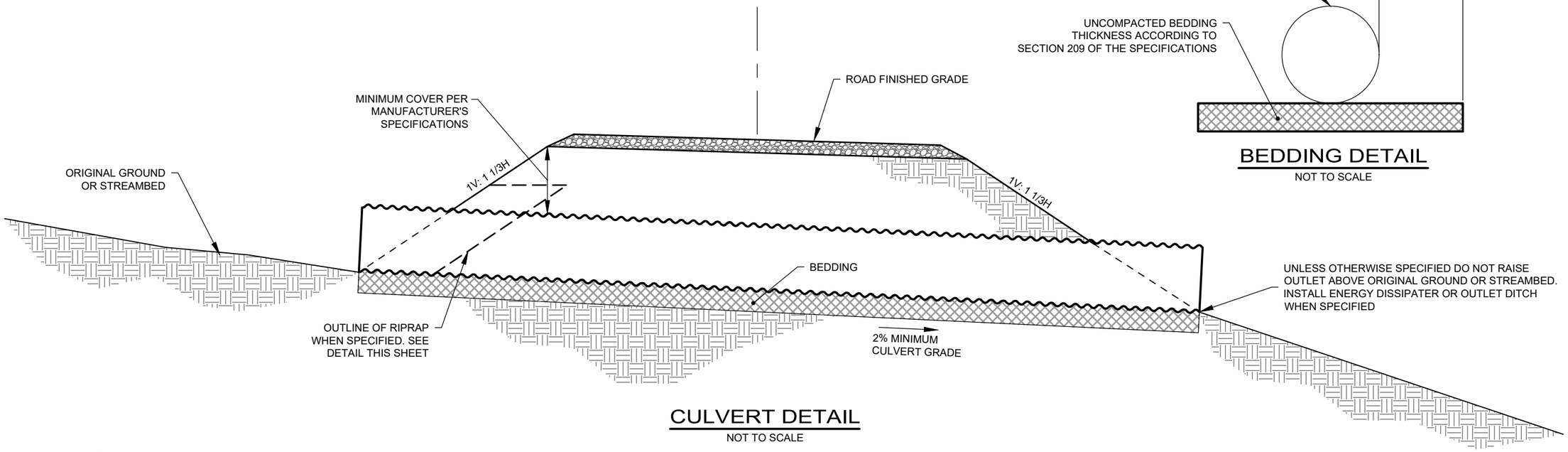

CULVERT DETAIL

NOT TO SCALE

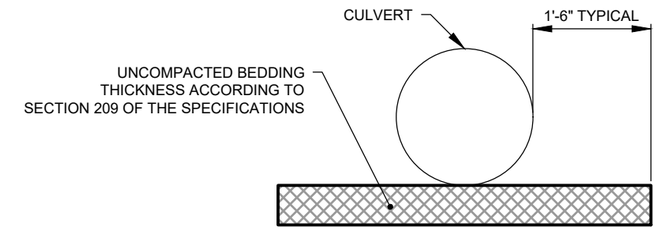

BEDDING DETAIL

NOT TO SCALE

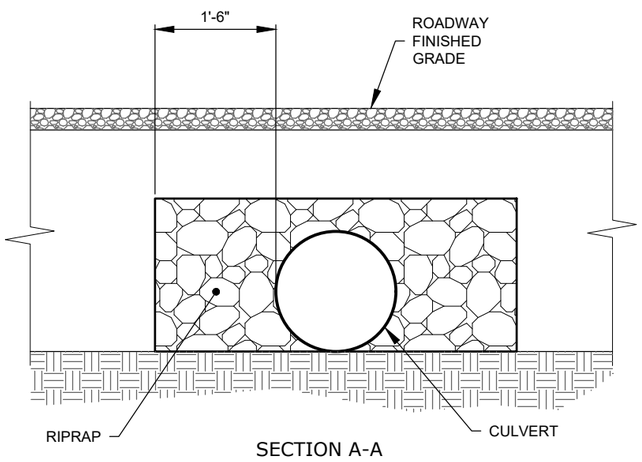

SECTION A-A

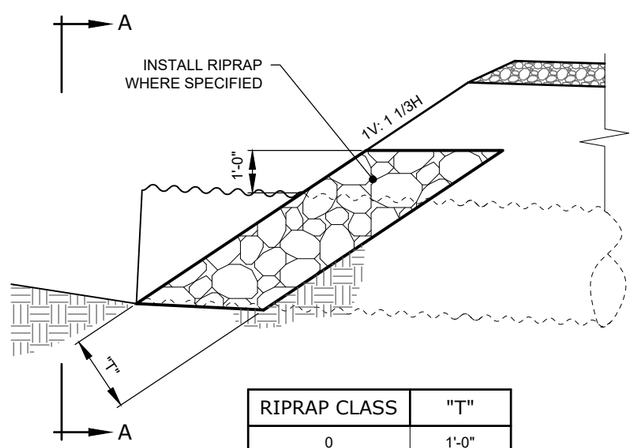

RIPRAP CLASS	"T"
0	1'-0"
1	1'-6"
2	2'-6"
3	3'-0"
4	3'-6"

RIPRAP DETAIL

NOT TO SCALE

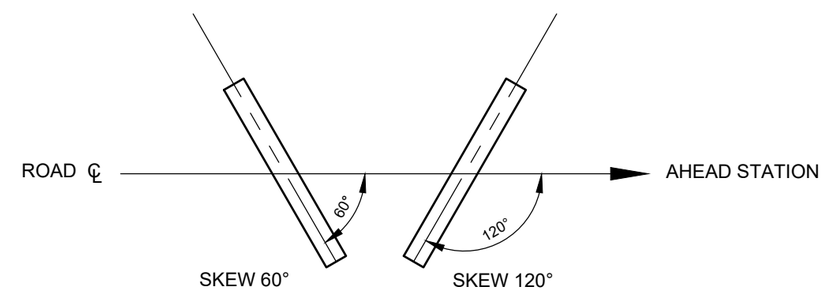

SKEW DIAGRAM

NOT TO SCALE

9/28/18 07:07 MARKL F:_CAD STANDARDS\AGENCY STANDARDS\FOREST SERVICE\NFS-CTB.DWG;

USDA United States Department of Agriculture Forest Service	NORTHERN REGION REGION ONE	PROJECT NAME: POWERHOUSE AREA ROADS — KOOTENAI NATIONAL FOREST — LIBBY RANGER DISTRICT	DRAWING TITLE: CULVERT DETAIL	DATE 2/24/2025 · DESIGNER KM · CHECKED CA	DWG SHEET NO. 5 · SHEET 5 OF 11

NO.	REVISION DESCRIPTION	BY	DATE
△			
△			
△			

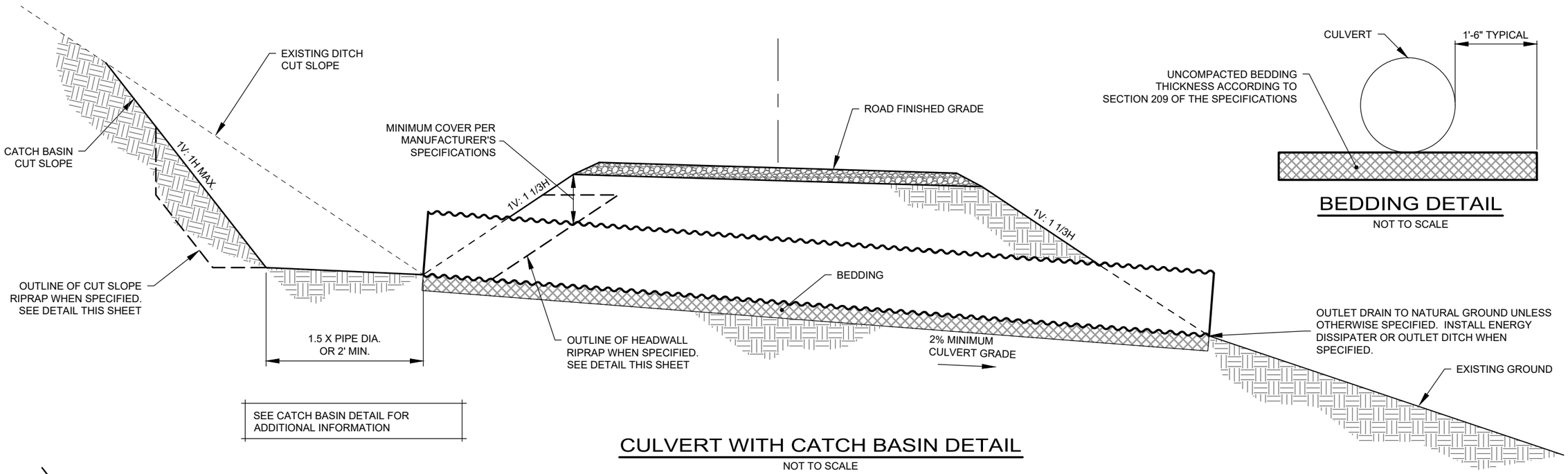

CULVERT WITH CATCH BASIN DETAIL

NOT TO SCALE

BEDDING DETAIL

NOT TO SCALE

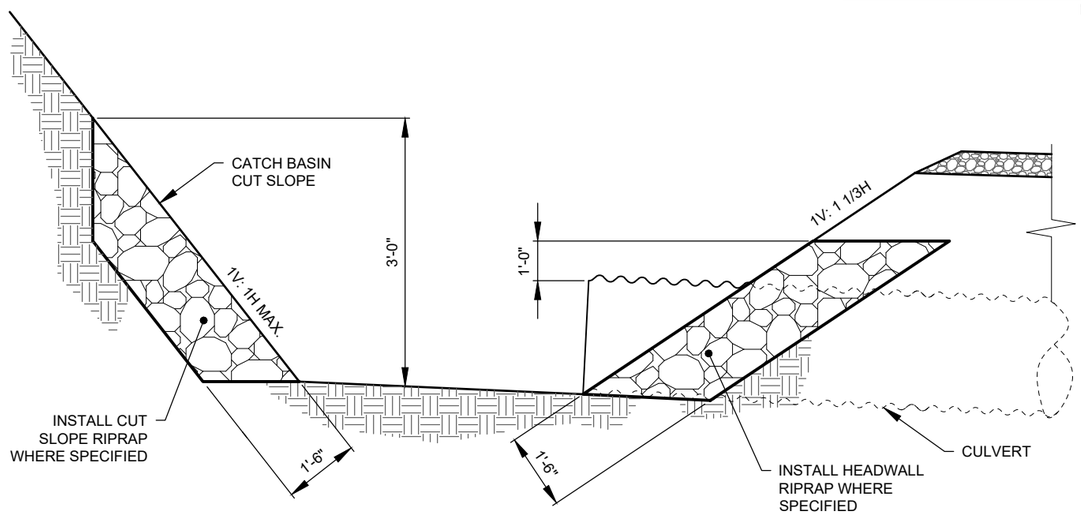

RIPRAP DETAIL

NOT TO SCALE

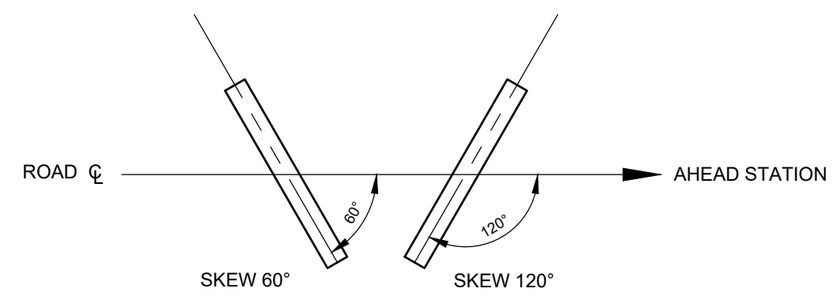

SKEW DIAGRAM

NOT TO SCALE

9/28/18 07:07 MARKL F:_CAD STANDARDS\AGENCY STANDARDS\FOREST SERVICE\NFS-CTB.DWG;

United States Department of Agriculture Forest Service	NORTHERN REGION REGION ONE	PROJECT NAME POWERHOUSE AREA ROADS KOOTENAI NATIONAL FOREST LIBBY RANGER DISTRICT	DRAWING TITLE CULVERT WITH CATCH BASIN DETAIL	DATE 2/24/2025	DESIGNER KM	CHECKED CA
				NO. / REVISION DESCRIPTION / BY / DATE	DWG SHEET NO. 6	SHEET 6 OF 11

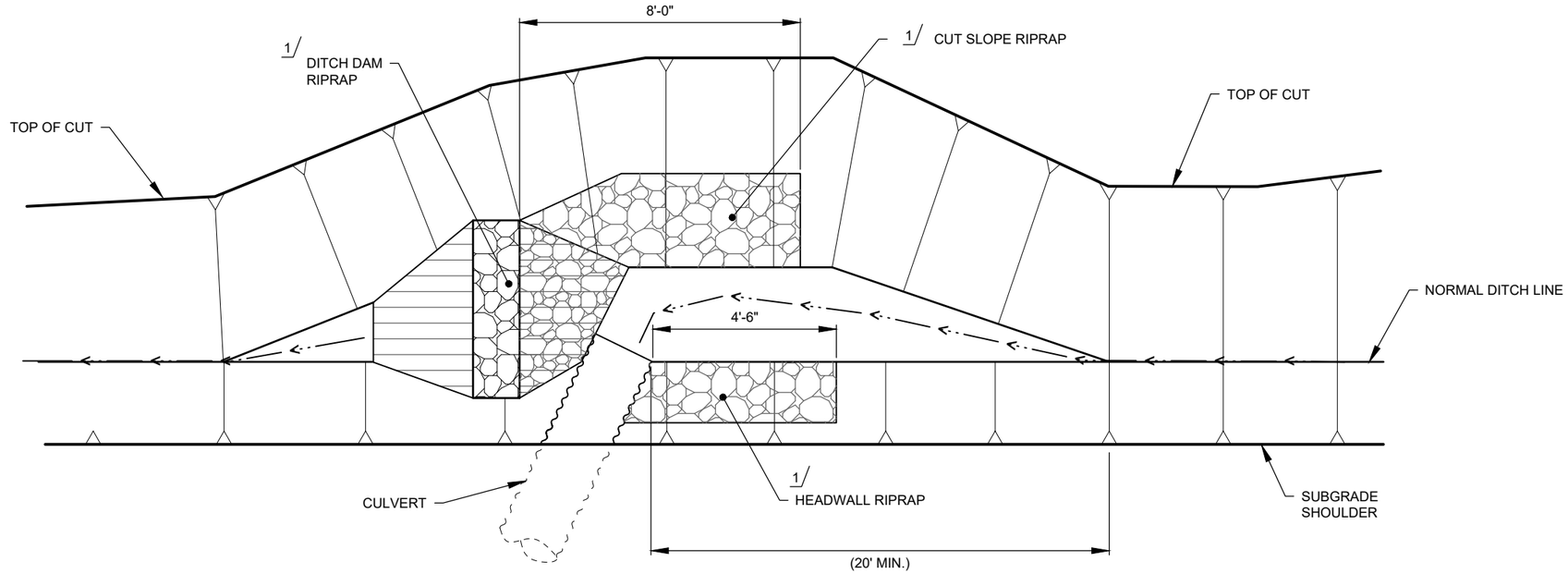

PLAN VIEW

1/ INSTALL RIPRAP WHEN SPECIFIED

CATCH BASIN DETAIL

NOT TO SCALE

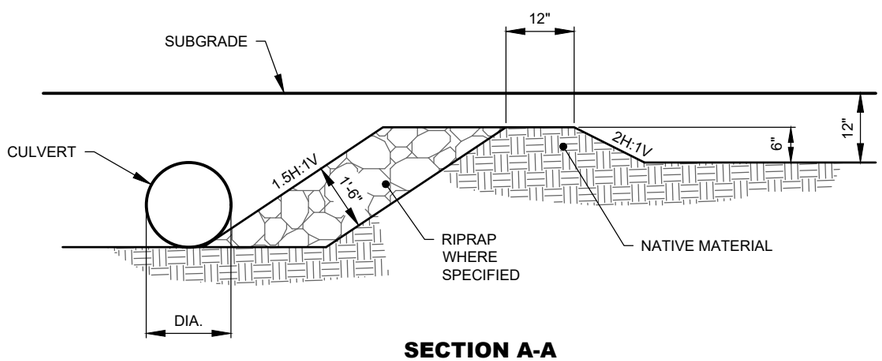

SECTION A-A

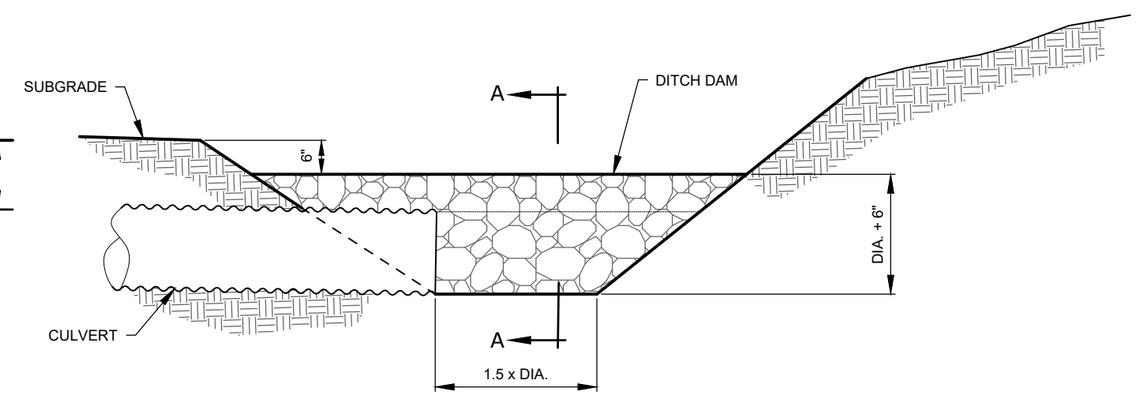

CATCH BASIN ELEVATION

9/28/18 07:07 MARKL F:_CAD STANDARDS\AGENCY STANDARDS\FOREST SERVICE\NFS-CTB.DWG;

USDA United States Department of Agriculture Forest Service	NORTHERN REGION REGION ONE	PROJECT NAME POWERHOUSE AREA ROADS KOOTENAI NATIONAL FOREST LIBBY RANGER DISTRICT	DRAWING TITLE CATCH BASIN DETAIL	DATE 2/24/2025	DESIGNER KM	CHECKED CA
				NO. / REVISION DESCRIPTION / BY / DATE	DWG SHEET NO. 7	SHEET 7 OF 11

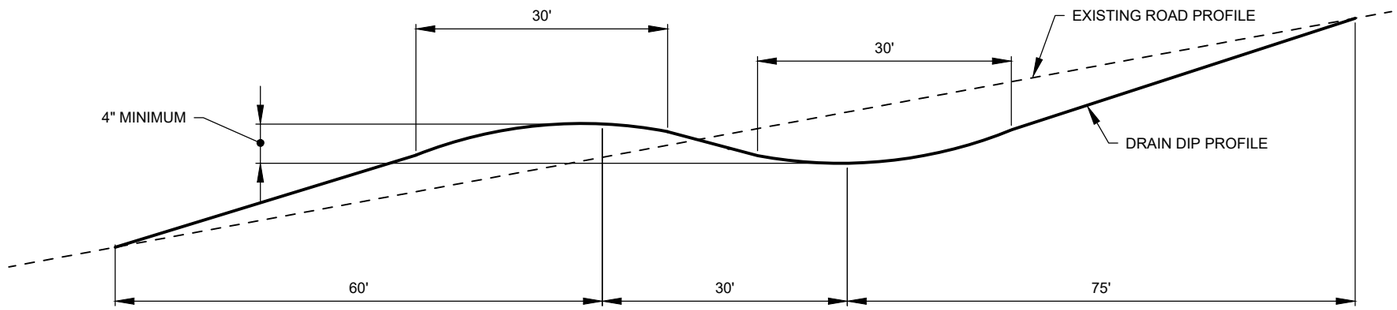

DRAIN DIP - TYPE II

NOT TO SCALE

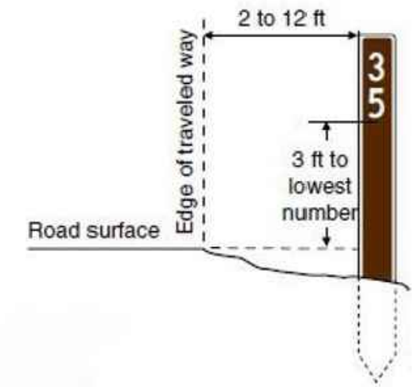

FM1-7V DETAIL

NOT TO SCALE

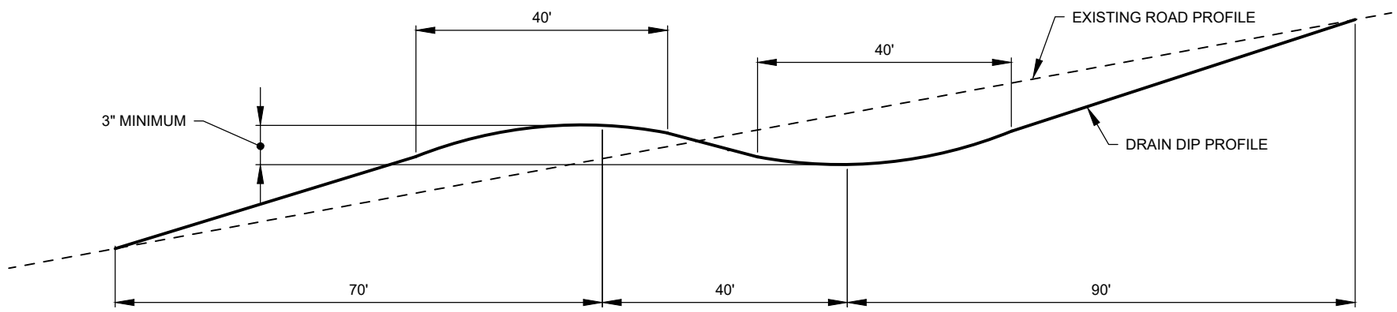

DRAIN DIP - TYPE I

NOT TO SCALE

NOTES:
1. CROSS SLOPE OF THE LOW POINT DRAINLINE SHALL BE 5%.
2. SKEW OF DRAINLINE SHALL BE 0-25 DEGREES.
3. UNLESS OTHERWISE SPECIFIED IN THE WORKLIST DO NOT INTERCEPT THE ROADWAY DITCH.

9/28/18 07:07 MARKL F:_CAD STANDARDS\AGENCY STANDARDS\FOREST SERVICE\FS-CTB.DWG;

USDA United States Department of Agriculture Forest Service	NORTHERN REGION REGION ONE	PROJECT NAME POWERHOUSE AREA ROADS KOOTENAI NATIONAL FOREST LIBBY RANGER DISTRICT	DRAWING TITLE DRAIN DIP & SIGNING DETAILS	DATE 2/24/2025	DESIGNER KM	CHECKED CA	DWG SHEET NO. 8	SHEET 8 OF 11
				NO.	REVISION DESCRIPTION	BY	DATE
				△			
				△			
				△			

SURFACE WATER DEFLECTOR DETAILS

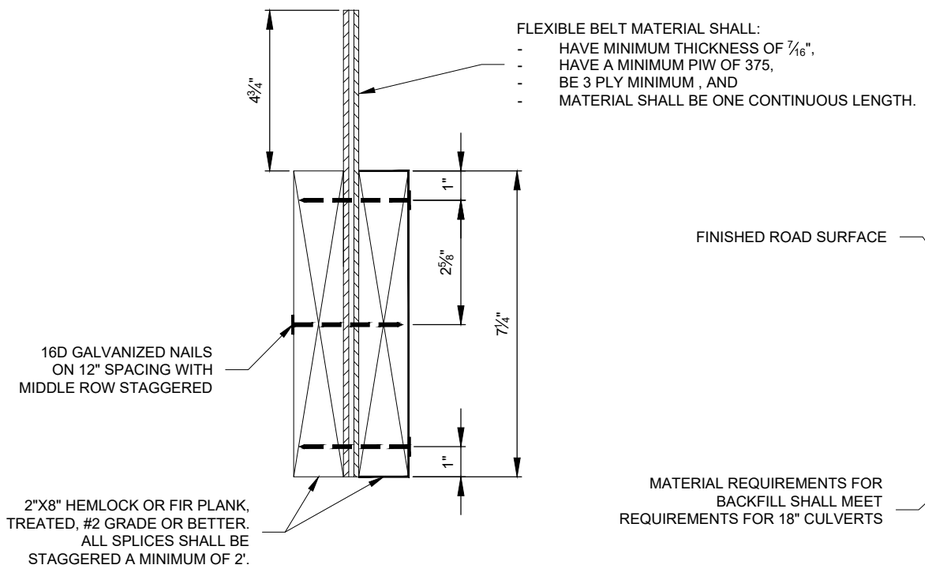

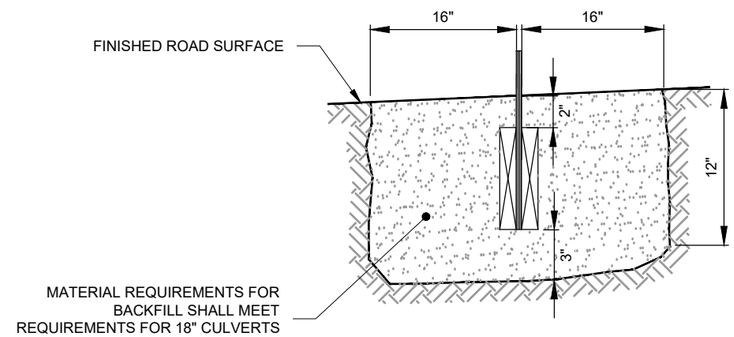

NOTES

1. ALL TREATED LUMBER SHALL BE INCISED AND PRESSURE TREATED IN ACCORDANCE WITH THE AWPA UC4-A FOR GROUND CONTACT.
2. FIELD TREATMENT: ALL ABRASIONS AND CUTS MADE IN THE FIELD SHALL BE CAREFULLY TRIMMED AND GIVEN THREE BRUSH COATS OF THE TREATMENT SOLUTION. HOLES DRILLED IN THE FIELD SHALL BE POURED FULL OF PRESERVATIVE AND PLUGGED WITH TIGHT FITTING TREATED PLUGS.
3. ALL HARDWARE SHALL CONFORM TO FP-03 716.02 AND SHALL BE GALVANIZED. LUMBER SHALL CONFORM TO FP-14 716.03.
4. OUTLET OF DEFLECTOR SHALL BE A MINIMUM OF 0.5' LOWER THAN THE INLET.
5. CERTIFICATIONS: ONE COPY OF THE FOLLOWING COMPLIANCE CERTIFICATE SHALL BE FURNISHED UPON DELIVERY OF THE MATERIALS:
   A. SUPPLIER CERTIFICATION THAT ALL WOOD MATERIALS MEET THE REQUIREMENTS AS TO SPECIES AND GRADE.
   B. CERTIFICATION OF TREATMENT OF LUMBER TO INCLUDE TYPE OF PRESERVATIVE, RETENTION IN PCF (ASSAY METHOD) AND PENETRATION IN INCHES, BY A QUALIFIED INSPECTION AND TESTING AGENCY.
   C. SUPPLIER CERTIFICATION THAT ALL RUBBER BELTING MATERIALS MEET THE REQUIREMENTS AS NOTED IN DETAIL.
6. SKEW SHALL BE AS CLOSE TO 45 DEGREES UNLESS OTHERWISE INDICATED. LENGTH AS INDICATED IN WORKLIST.

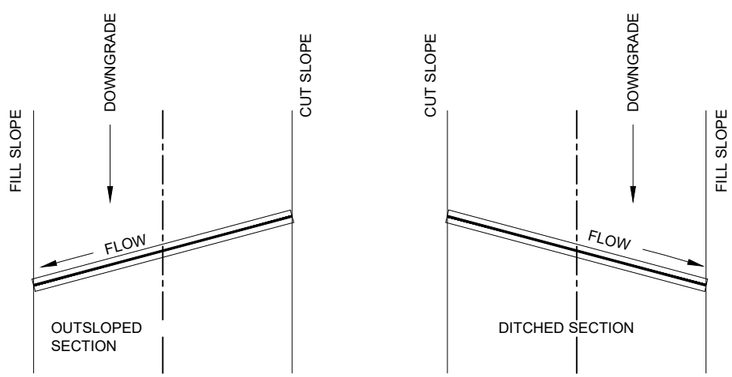

SINGLE LANE

INSTALL AT 45 DEGREES TO ROAD

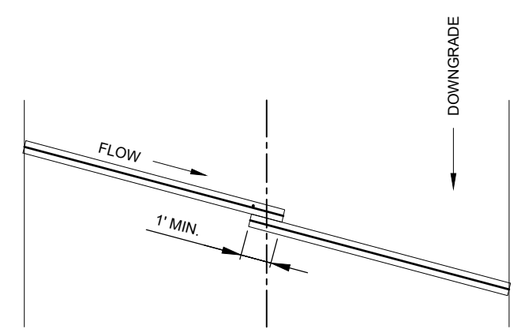

DOUBLE LANE

DRAWINGS NOT TO SCALE

9/28/18 07:07 MARKL F:_CAD STANDARDS\AGENCY STANDARDS\FOREST SERVICE\NFS-CTB.DWG;

United States Department of Agriculture
Forest Service

NORTHERN REGION
REGION ONE

PROJECT NAME
POWERHOUSE AREA ROADS
KOOTENAI NATIONAL FOREST
LIBBY RANGER DISTRICT

DRAWING TITLE
SURFACE WATER DEFLECTOR DETAILS

DATE	DESIGNER	CHECKED	DWG SHEET NO.	SHEET
2/24/2025	KM	CA	9	9 OF 11

NO.	REVISION DESCRIPTION	BY	DATE
△			
△			
△			

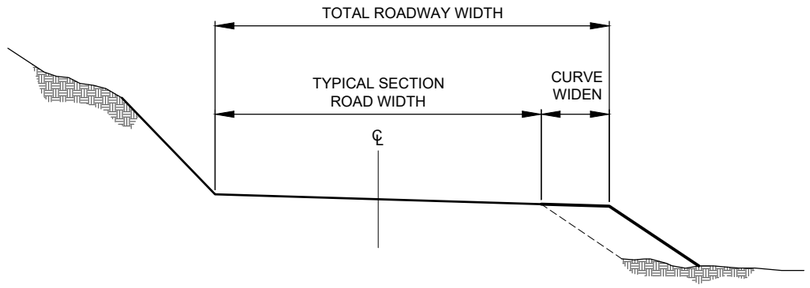

FILL SLOPE CURVE WIDENING

NOT TO SCALE

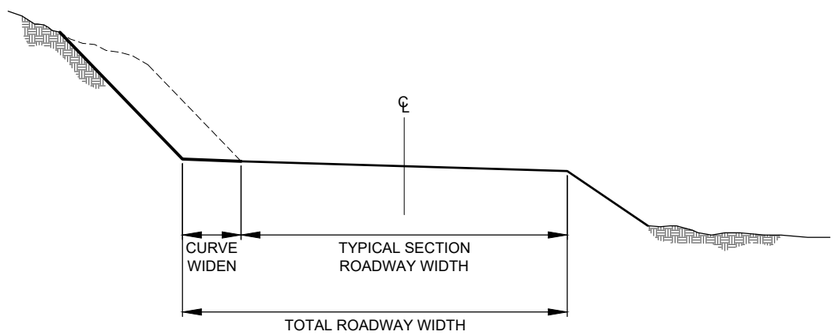

CUT SLOPE CURVE WIDENING

NOT TO SCALE

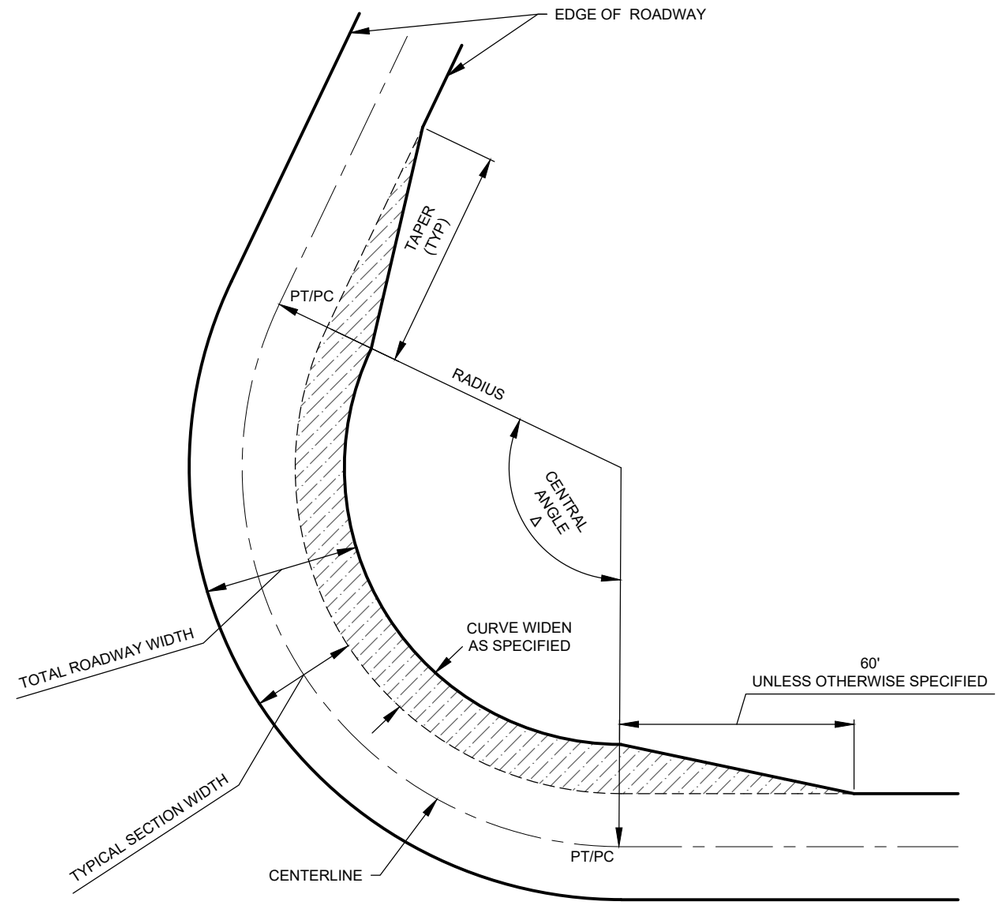

NOTES:

1. ADD HORIZONTAL CURVE WIDENING TO THE INSIDE OF CURVES. WIDENING APPLIES TO THE ROADWAY THROUGH THE ENTIRE CURVE FROM PC TO PT.

9/28/18 07:07 MARKL F:_CAD STANDARDS\AGENCY STANDARDS\FOREST SERVICE\NFS-CTB.DWG;

United States Department of Agriculture
Forest Service

NORTHERN REGION
REGION ONE

PROJECT NAME
POWERHOUSE AREA ROADS
KOOTENAI NATIONAL FOREST
LIBBY RANGER DISTRICT

DRAWING TITLE
CURVE WIDENING

DATE	DESIGNER	CHECKED	DWG SHEET NO.	SHEET
2/24/2025	KM	CA	10	10 OF 11

NO.	REVISION DESCRIPTION	BY	DATE
△			
△			
△			

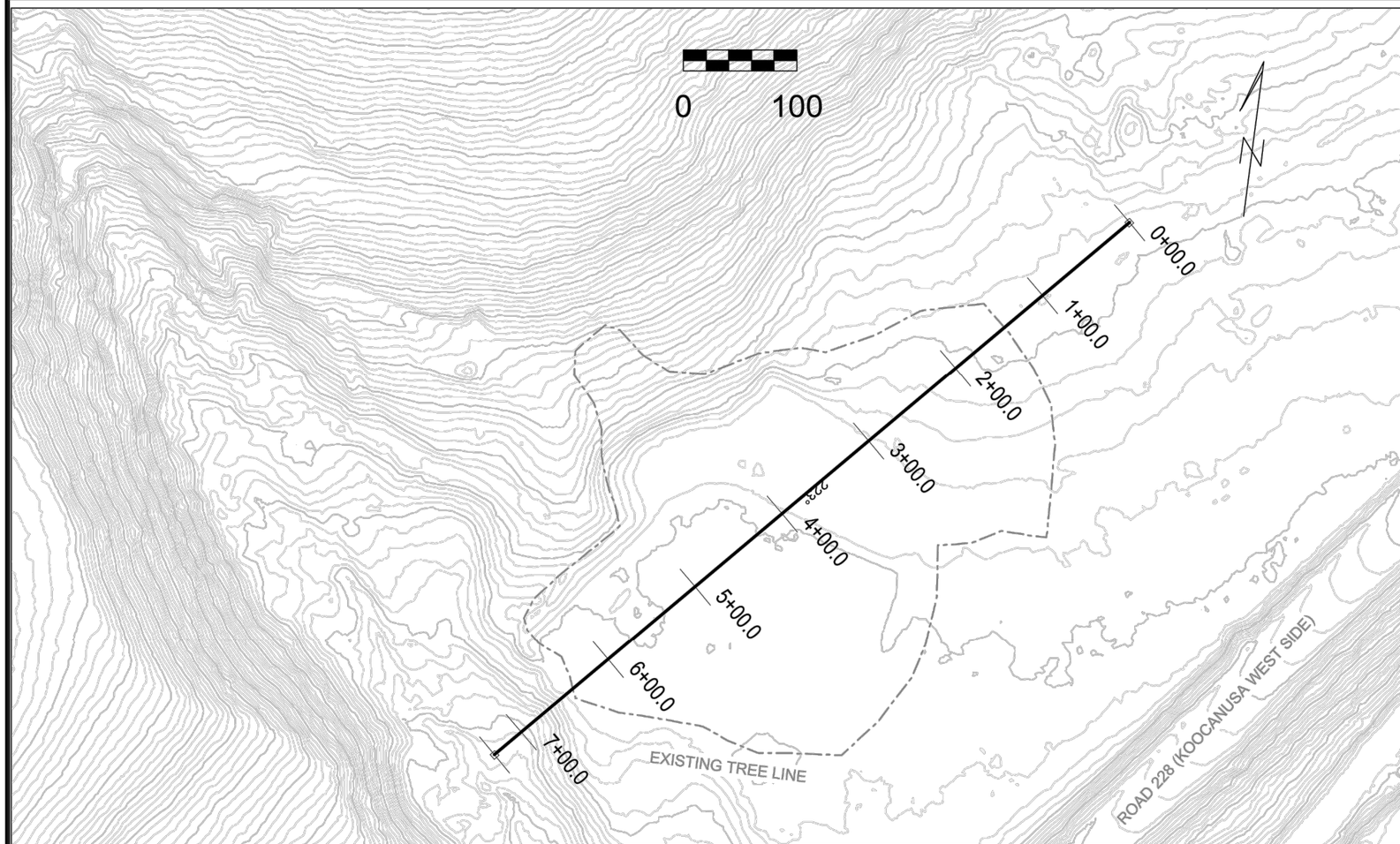

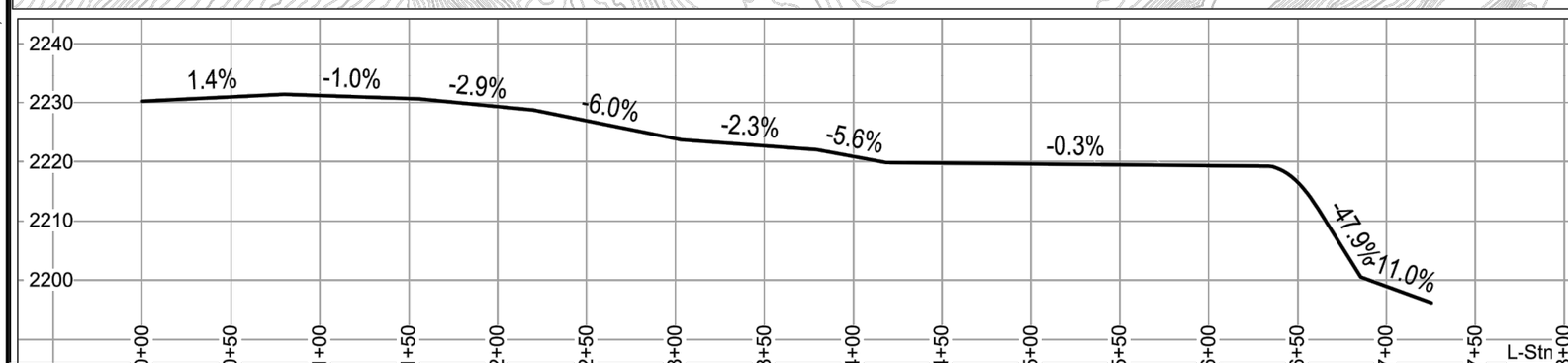

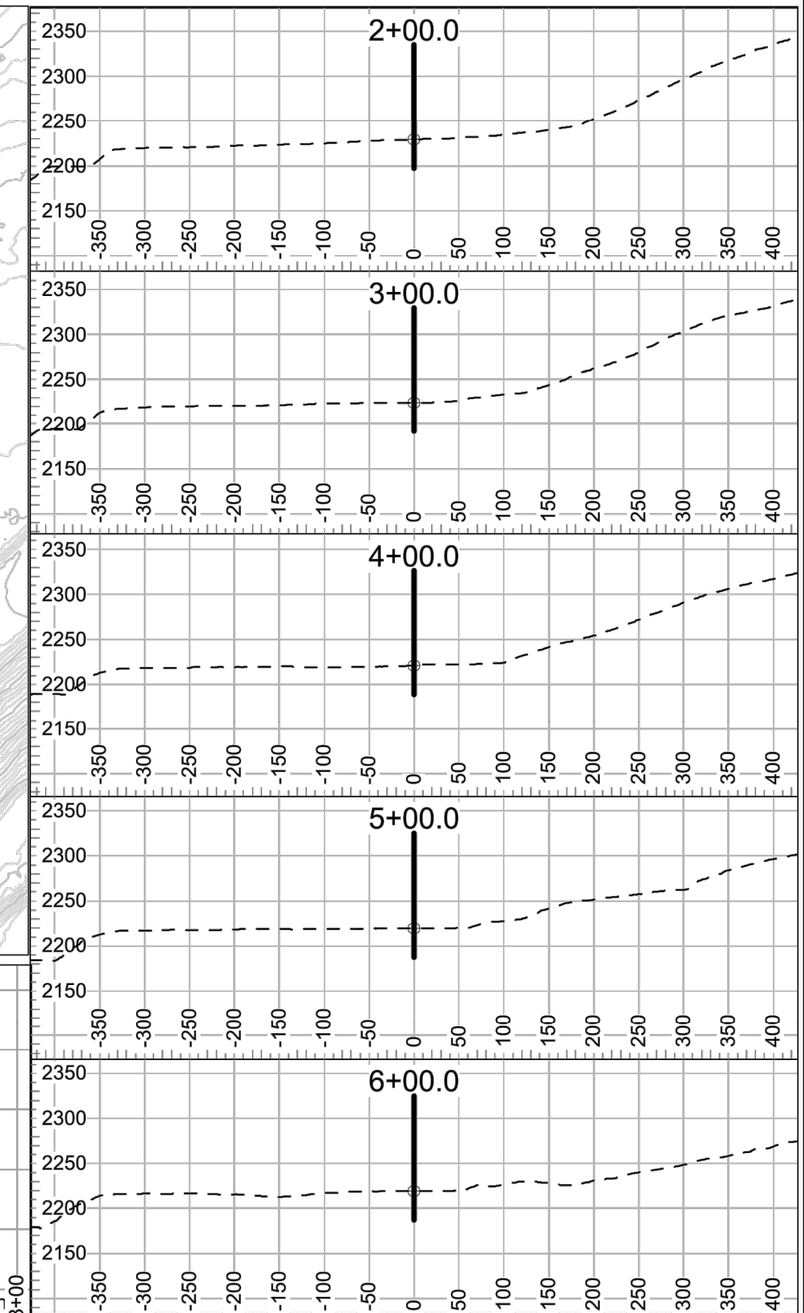

9/28/18 07:07 MARKL F:_CAD STANDARDS\AGENCY STANDARDS\FOREST SERVICE\NFS-CTB.DWG;

USDA FOREST SERVICE
United States Department of Agriculture
Forest Service

NORTHERN REGION
REGION ONE

PROJECT NAME
POWERHOUSE AREA ROADS
KOOTENAI NATIONAL FOREST
LIBBY RANGER DISTRICT

DRAWING TITLE
ALEXANDER PIT EXISTING CONDITIONS

DATE	DESIGNER	CHECKED	DWG SHEET NO.	SHEET
2/24/2025	KM	CA	11	11 OF 11

NO.	REVISION DESCRIPTION	BY	DATE
△			
△			
△			

Index to Worklists

SHEET	ROAD NUMBER
W1	4857
W2	4847D
W3-W8	4872
W9	4872A
W10	4872B
W11-W12	4873
W13	4878
W14	4879
W15	8833
W16	99047
W17	99047A

WORKLIST					
Road # 4857					
BEG M.P.	END M.P.	PAY ITEM	WORK DESCRIPTION	QTY	UNIT
0.000	1.517	30315	ROADWAY RECONDITIONING, COMPACTION METHOD (4)	1.52	MILE
		20210	SPECIAL CLEARING AND GRUBBING, TYPE ROADWAY, DISPOSAL METHOD (K), COMPACTION METHOD (5)	1.52	MILE
		62550	TURF ESTABLISHMENT, DRY METHOD SEEDING, DRY METHOD MULCHING, GOV'T FURNISHED SEED	0.65	ACRE
			No existing aggregate surfacing present. 4" DBH trees and alders growing on the edge of the roadway. Includes cleaning all culvert inlets/outlets and surface water deflectors. Turf establishment quantity assumed to be 3' ditch inslope for the full length of reconditioning area plus 0.1 acres for each new culvert, catch basin and surface water deflector.		
0.005		60212	SURFACE WATER DEFLECTOR, COMPACTION METHOD (2)	24.00	FOOT
		20302B	REMOVAL OF SURFACE WATER DEFLECTOR, DISPOSAL METHOD (A), COMPACTION METHOD (5)	1.00	EACH
			Remove existing surface water deflector and install a new 24' long surface water deflector.		
0.067			Existing 18" CMP in good condition.		
0.177			Existing surface water deflector in good condition.		
0.231			Existing 18" CMP in good condition.		
0.333			Existing 18" CMP in good condition.		
0.361			Existing surface water deflector in good condition.		
0.421			Existing 18" CMP in good condition.		
0.468			Existing surface water deflector in good condition.		
0.620		20421B	DRAINAGE EXCAVATION, RECONDITION DRAIN DIP TYPE II, TOLERANCE CLASS (A), COMPACTION METHOD (3)	1.00	EACH
0.700		20421B	DRAINAGE EXCAVATION, RECONDITION DRAIN DIP TYPE II, TOLERANCE CLASS (A), COMPACTION METHOD (3)	1.00	EACH
1.012		20421B	DRAINAGE EXCAVATION, RECONDITION DRAIN DIP TYPE II, TOLERANCE CLASS (A), COMPACTION METHOD (3)	1.00	EACH
1.267			Intersection with FSR 4857C, right.		
1.517			End of roadwork.		

WORKLIST					
Road # 4857D					
BEG M.P.	END M.P.	PAY ITEM	WORK DESCRIPTION	QTY	UNIT
0.000	0.930	21201	LINEAR GRADING, COMPACTION METHOD (3), DISPOSAL METHOD (F)	0.93	MILE
		20103	CLEARING AND GRUBBING, DISPOSAL METHOD (K)	0.93	MILE
		62550	TURF ESTABLISHMENT, DRY METHOD SEEDING, DRY METHOD MULCHING, GOV'T FURNISHED SEED	0.34	ACRE
			The planned horizontal alignment and profile grade shall follow the existing centerline of FSR 4857D. Reconstruct the road according to Typical Section 1 where the existing road does not include a ditch. Reconstruct the road according to Typical Section 2 where the existing road includes a ditch. Apply Curve Widening as specified in the worklist and according to the Curve Widening Detail in the plans. No existing aggregate surfacing present. 6" DBH trees and alders growing in roadway. Turf establishment quantity assumed to be 3' ditch inslope for the full length of reconditioning area plus 0.1 acres for each new culvert, catch basin and surface water deflector.		
0.300			Existing 18" CMP in good condition.		
0.800			Existing 18" CMP in good condition.		
0.870			Existing 18" CMP in good condition.		
0.930			End of roadwork.		

WORKLIST					
Road # 4872					
BEG M.P.	END M.P.	PAY ITEM	WORK DESCRIPTION	QTY	UNIT
0.000	7.680	30315	ROADWAY RECONDITIONING, COMPACTION METHOD (4)	7.68	MILE
		62550	TURF ESTABLISHMENT, DRY METHOD SEEDING, DRY METHOD MULCHING, GOV'T FURNISHED SEED	4.00	ACRE
			Existing aggregate surfacing in poor condition. Includes cleaning all culvert inlets and outlets. Turf establishment quantity assumed to be 3' ditch inslope for the full length of reconditioning area plus 0.1 acres for each new culvert, catch basin and surface water deflector.		
0.000			Intersection with FSR 228.		
0.000			Existing 18" CMP in good condition.		
0.022			Intersection with unmarked road, left.		
0.069			Existing surface water deflector in good condition.		
0.105			Existing 18" CMP in good condition.		
0.132		20302B	REMOVAL OF SURFACE WATER DEFLECTOR, DISPOSAL METHOD (A), COMPACTION METHOD (5)	1.00	EACH
		60212	SURFACE WATER DEFLECTOR, COMPACTION METHOD (2)	22.00	FOOT
			Remove existing surface water deflector and install a new 22' long surface water deflector.		
0.216			Existing pipe gate with 14' usable width in good condition.		
0.229			Existing surface water deflector in good condition.		
0.327			Existing 18" CMP in good condition.		
0.354			Existing surface water deflector in good condition.		
0.390			Existing 18" CMP in good condition.		
0.485		20420	DRAINAGE EXCAVATION, TYPE ROADSIDE DITCH, TOLERANCE CLASS (A), COMPACTION METHOD (5)	50.00	FOOT
		20421A	DRAINAGE EXCAVATION, TYPE CATCH BASIN, TOLERANCE CLASS (A), COMPACTION METHOD (5)	1.00	EACH
			Existing 18" CMP in good condition. Construct new catch basin and 50' of new ditch upstation.		
0.578			Existing surface water deflector in good condition.		
0.665			Existing 18" CMP in good condition.		
0.677		20302B	REMOVAL OF SURFACE WATER DEFLECTOR, DISPOSAL METHOD (A), COMPACTION METHOD (5)	1.00	EACH
		60212	SURFACE WATER DEFLECTOR, COMPACTION METHOD (2)	25.00	FOOT
			Remove existing surface water deflector and install a new 25' long surface water deflector.		
0.743			Existing 18" CMP in good condition.		
0.778			Existing surface water deflector in good condition.		
0.805			Existing 18" CMP in good condition.		
0.905		20302A	REMOVAL OF CULVERT, DISPOSAL METHOD (A), COMPACTION METHOD (5)	1.00	EACH
		60201	18 INCH PIPE CULVERT, CORRUGATED STEEL, 16 GAGE, COMPACTION METHOD (6)	32.00	FOOT
		30207	ROADWAY AGGREGATE, COMPACTION METHOD (A) (GOV'T FURNISHED MATERIAL SOURCE)	10.00	CUBIC YARD*
			Remove existing 18" CMP in poor condition. Install new 32' long x 18" CMP. Surface disturbed area with 10 CY of aggregate surface course.		
0.988		63311	REMOVE SIGN, DISPOSAL METHOD (A)	1.00	EACH
			Remove existing MP 1 sign.		

WORKLIST					
Road # 4872					
BEG M.P.	END M.P.	PAY ITEM	WORK DESCRIPTION	QTY	UNIT
1.000		63301	SIGN SYSTEM	1.00	EACH
			Install new MP 1 sign. New FM1-7V.		
1.051			Existing 24" CMP in good condition.		
1.103		20421B	DRAINAGE EXCAVATION, RECONDITION DRAIN DIP TYPE II, TOLERANCE CLASS (A), COMPACTION METHOD (3)	1.00	EACH
1.173			Existing 18" CMP in good condition.		
1.263		20421B	DRAINAGE EXCAVATION, RECONDITION DRAIN DIP TYPE II, TOLERANCE CLASS (A), COMPACTION METHOD (3)	1.00	EACH
1.354			Existing 18" CMP in good condition.		
1.385		20421B	DRAINAGE EXCAVATION, RECONDITION DRAIN DIP TYPE II, TOLERANCE CLASS (A), COMPACTION METHOD (3)	1.00	EACH
1.476			Existing 18" CMP in good condition.		
1.549			Existing surface water deflector in good condition.		
1.667			Existing 18" CMP in good condition.		
1.685			Intersection with FSR 4873, right.		
1.705			Existing 18" CMP in good condition.		
1.772			Existing surface water deflector in good condition.		
1.772	6.035	20209	SELECTIVE CLEARING, TYPE ROADSIDE, DISPOSAL METHOD (F)	4.26	MILE
			Pine branches and alders encroaching on roadway.		
1.824		63311	REMOVE SIGN, DISPOSAL METHOD (A)	1.00	EACH
			Remove MP 2 sign.		
1.848		60708	CLEANING CULVERTS IN PLACE	1.00	EACH
			Flush existing 18" CMP.		
1.904			Existing 18" CMP in good condition.		
1.914		63311	REMOVE SIGN, DISPOSAL METHOD (A)	1.00	EACH
			Remove MP 2 sign.		
2.000		63301	SIGN SYSTEM	1.00	EACH
			Install new MP 2 sign. New FM1-7V.		
2.194			Existing 18" CMP in good condition.		
2.294		20421B	DRAINAGE EXCAVATION, RECONDITION DRAIN DIP TYPE II, TOLERANCE CLASS (A), COMPACTION METHOD (3)	1.00	EACH
2.302		20302A	REMOVAL OF CULVERT, DISPOSAL METHOD (A), COMPACTION METHOD (5)	1.00	EACH
		60201	18 INCH PIPE CULVERT, CORRUGATED STEEL, 16 GAGE, COMPACTION METHOD (6)	32.00	FOOT
		30207	ROADWAY AGGREGATE, COMPACTION METHOD (A) (GOV'T FURNISHED MATERIAL SOURCE)	10.00	CUBIC YARD*
			Remove existing 18" CMP in poor condition. Install new 32' long x 18" CMP. Surface disturbed area with 10 CY of aggregate surface course.		
2.322			Existing 18" CMP in good condition.		
2.399		20302A	REMOVAL OF CULVERT, DISPOSAL METHOD (A), COMPACTION METHOD (5)	1.00	EACH
		60201	18 INCH PIPE CULVERT, CORRUGATED STEEL, 16 GAGE, COMPACTION METHOD (6)	30.00	FOOT
		30207	ROADWAY AGGREGATE, COMPACTION METHOD (A) (GOV'T FURNISHED MATERIAL SOURCE)	10.00	CUBIC YARD*

WORKLIST					
Road # 4872					
BEG M.P.	END M.P.	PAY ITEM	WORK DESCRIPTION	QTY	UNIT
			Remove existing 18" CMP in poor condition. Install new 30' long x 18" CMP. Surface disturbed area with 10 CY of aggregate surface course.		
2.420		20302B	REMOVAL OF SURFACE WATER DEFLECTOR, DISPOSAL METHOD (A), COMPACTION METHOD (5)	1.00	EACH
		60212	SURFACE WATER DEFLECTOR, COMPACTION METHOD (2)	24.00	FOOT
			Remove existing surface water deflector and install a new 24' long surface water deflector.		
2.443			Existing 18" CMP in good condition.		
2.618		20421B	DRAINAGE EXCAVATION, RECONDITION DRAIN DIP TYPE II, TOLERANCE CLASS (A), COMPACTION METHOD (3)	1.00	EACH
2.638			Existing 18" CMP in good condition.		
2.699		20421B	DRAINAGE EXCAVATION, RECONDITION DRAIN DIP TYPE II, TOLERANCE CLASS (A), COMPACTION METHOD (3)	1.00	EACH
2.722		20302A	REMOVAL OF CULVERT, DISPOSAL METHOD (A), COMPACTION METHOD (5)	1.00	EACH
		60201	18 INCH PIPE CULVERT, CORRUGATED STEEL, 16 GAGE, COMPACTION METHOD (6)	34.00	FOOT
		30207	ROADWAY AGGREGATE, COMPACTION METHOD (A) (GOV'T FURNISHED MATERIAL SOURCE)	10.00	CUBIC YARD*
			Remove existing 18" CMP in poor condition. Install new 34' long x 18" CMP. Surface disturbed area with 10 CY of aggregate surface course.		
2.774		20421B	DRAINAGE EXCAVATION, RECONDITION DRAIN DIP TYPE II, TOLERANCE CLASS (A), COMPACTION METHOD (3)	1.00	EACH
2.810		63311	REMOVE SIGN, DISPOSAL METHOD (A)	1.00	EACH
			Remove MP 3 sign.		
2.855			Existing 18" CMP in good condition.		
2.892			Existing surface water deflector in good condition.		
3.000		63301	SIGN SYSTEM	1.00	EACH
			Install new MP 3 sign. New FM1-7V.		
3.025			Existing 18" CMP in good condition.		
3.152			Intersection with FSR 4867, right.		
3.181			Existing 57" span x 38" rise CMP pipe-arch on live drainage in good condition.		
3.190			Existing 18" CMP in good condition.		
3.200		30106	SCREENED AGGREGATE, GRADING O, COMPACTION METHOD (A) (GOV'T FURNISHED MATERIAL SOURCE)	35.00	CUBIC YARD*
		30207	ROADWAY AGGREGATE, COMPACTION METHOD (A) (GOV'T FURNISHED MATERIAL SOURCE)	25.00	CUBIC YARD*
			Low point in roadway holding water. Place 35 CY of 6" compacted depth 3"-minus pit run for 125' long x 14' wide. Surface over the new pit run with 25 CY of aggregate surface course.		
3.211			Existing surface water deflector in good condition.		
3.292			Existing 18" CMP in good condition.		
3.388		20421B	DRAINAGE EXCAVATION, RECONDITION DRAIN DIP TYPE II, TOLERANCE CLASS (A), COMPACTION METHOD (3)	1.00	EACH
3.485		20421B	DRAINAGE EXCAVATION, RECONDITION DRAIN DIP TYPE II, TOLERANCE CLASS (A), COMPACTION METHOD (3)	1.00	EACH
3.528		60201	18 INCH PIPE CULVERT, CORRUGATED STEEL, 16 GAGE, COMPACTION METHOD (6)	38.00	FOOT
		30207	ROADWAY AGGREGATE, COMPACTION METHOD (A) (GOV'T FURNISHED MATERIAL SOURCE)	10.00	CUBIC YARD*

WORKLIST					
Road # 4872					
BEG M.P.	END M.P.	PAY ITEM	WORK DESCRIPTION	QTY	UNIT
			Low point in ditch causing water to pond. Install new 38' long x 18" CMP. Surface the disturbed area with 10 CY of aggregate surface course.		
3.597			Existing 18" CMP in good condition.		
3.646		20421B	DRAINAGE EXCAVATION, RECONDITION DRAIN DIP TYPE II, TOLERANCE CLASS (A), COMPACTION METHOD (3)	1.00	EACH
3.770		63311	REMOVE SIGN, DISPOSAL METHOD (A)	1.00	EACH
			Remove MP 4 sign.		
3.793			Existing 24" CMP in good condition.		
3.818			Existing 18" CMP in good condition.		
3.845		20421B	DRAINAGE EXCAVATION, RECONDITION DRAIN DIP TYPE II, TOLERANCE CLASS (A), COMPACTION METHOD (3)	1.00	EACH
3.870			Existing 18" CMP in good condition.		
3.965		20421B	DRAINAGE EXCAVATION, RECONDITION DRAIN DIP TYPE II, TOLERANCE CLASS (A), COMPACTION METHOD (3)	1.00	EACH
4.000		63301	SIGN SYSTEM	1.00	EACH
			Install new MP 4 sign. New FM1-7V.		
4.068		20421B	DRAINAGE EXCAVATION, RECONDITION DRAIN DIP TYPE II, TOLERANCE CLASS (A), COMPACTION METHOD (3)	1.00	EACH
4.079			Existing 18" CMP in good condition.		
4.177			Existing 18" CMP in good condition.		
4.210		20421B	DRAINAGE EXCAVATION, RECONDITION DRAIN DIP TYPE II, TOLERANCE CLASS (A), COMPACTION METHOD (3)	1.00	EACH
4.265			Existing 18" CMP in good condition.		
4.346			Existing 18" CMP in good condition.		
4.356		20421B	DRAINAGE EXCAVATION, RECONDITION DRAIN DIP TYPE II, TOLERANCE CLASS (A), COMPACTION METHOD (3)	1.00	EACH
4.492			Existing 18" CMP in good condition.		
4.513		20421B	DRAINAGE EXCAVATION, RECONDITION DRAIN DIP TYPE II, TOLERANCE CLASS (A), COMPACTION METHOD (3)	1.00	EACH
4.652		20421B	DRAINAGE EXCAVATION, RECONDITION DRAIN DIP TYPE II, TOLERANCE CLASS (A), COMPACTION METHOD (3)	1.00	EACH
4.687			Existing 18" CMP in good condition.		
4.738		63311	REMOVE SIGN, DISPOSAL METHOD (A)	1.00	EACH
			Remove MP 5 sign.		
4.786			Existing 18" CMP in good condition.		
4.811		20421B	DRAINAGE EXCAVATION, RECONDITION DRAIN DIP TYPE II, TOLERANCE CLASS (A), COMPACTION METHOD (3)	1.00	EACH
4.931			Existing 18" CMP in good condition.		
5.000		63301	SIGN SYSTEM	1.00	EACH
			Install new MP 5 sign. New FM1-7V.		
5.029		20421B	DRAINAGE EXCAVATION, RECONDITION DRAIN DIP TYPE II, TOLERANCE CLASS (A), COMPACTION METHOD (3)	1.00	EACH
5.075			Existing 18" CMP in good condition.		
5.172		20421B	DRAINAGE EXCAVATION, RECONDITION DRAIN DIP TYPE II, TOLERANCE CLASS (A), COMPACTION METHOD (3)	1.00	EACH
5.221			Existing 18" CMP in good condition.		
		20302A	REMOVAL OF CULVERT, DISPOSAL METHOD (A), COMPACTION METHOD (5)	1.00	EACH

WORKLIST					
Road # 4872					
BEG M.P.	END M.P.	PAY ITEM	WORK DESCRIPTION	QTY	UNIT
5.301		60201	18 INCH PIPE CULVERT, CORRUGATED STEEL, 16 GAGE, COMPACTION METHOD (6)	50.00	FOOT
		30207	ROADWAY AGGREGATE, COMPACTION METHOD (A) (GOV'T FURNISHED MATERIAL SOURCE)	10.00	CUBIC YARD*
			Remove existing 18" CMP in poor condition. Install new 50' long x 18" CMP. Approximately 5' of fill over the culvert inlet and 15' of fill over the outlet. Surface disturbed area with 10 CY of aggregate surface course.		
5.363			Existing pipe gate with 17' usable width in good condition.		
5.432			Existing 18" CMP in good condition.		
5.562			Existing 18" CMP in good condition.		
5.596			Existing 18" CMP in good condition.		
5.682		63311	REMOVE SIGN, DISPOSAL METHOD (A)	1.00	EACH
			Remove MP 6 sign.		
5.743			Existing 18" CMP in good condition.		
5.865			Existing 18" CMP in good condition.		
5.953			Existing 18" CMP in good condition.		
5.953			Existing 18" CMP in good condition.		
6.000		63301	SIGN SYSTEM	1.00	EACH
			Install new MP 6 sign. New FM1-7V.		
6.035			Intersection with FSR 8833, left.		
6.035	7.680	20210	SPECIAL CLEARING AND GRUBBING, TYPE ROADWAY, DISPOSAL METHOD (K), COMPACTION METHOD (5)	1.21	MILE
			Small pine trees and alders growing along the edge of the roadway.		
6.142			Existing 18" CMP in good condition.		
6.231			Existing 18" CMP in good condition.		
6.610			Existing 18" CMP in good condition.		
6.439			Existing 18" CMP in good condition.		
6.527			Existing 18" CMP in good condition.		
6.603			Existing 18" CMP in good condition.		
6.643		63311	REMOVE SIGN, DISPOSAL METHOD (A)	1.00	EACH
			Remove MP 7 sign.		
6.647		20421A	DRAINAGE EXCAVATION, TYPE CATCH BASIN, TOLERANCE CLASS (A), COMPACTION METHOD (5)	1.00	EACH
		60708	CLEANING CULVERTS IN PLACE	1.00	EACH
			Flush existing 18" CMP. Construct new catch at the existing culvert inlet.		
6.792			Existing 18" CMP in good condition.		
6.900			Existing 18" CMP in good condition.		
6.900			Intersection with unmarked road, right.		
6.921		20421B	DRAINAGE EXCAVATION, RECONDITION DRAIN DIP TYPE II, TOLERANCE CLASS (A), COMPACTION METHOD (3)	1.00	EACH
6.952		20421B	DRAINAGE EXCAVATION, RECONDITION DRAIN DIP TYPE II, TOLERANCE CLASS (A), COMPACTION METHOD (3)	1.00	EACH
6.976			Existing 18" CMP in good condition.		
7.000		63301	SIGN SYSTEM	1.00	EACH
			Install new MP 7 sign. New FM1-7V.		

WORKLIST					
Road # 4872					
BEG M.P.	END M.P.	PAY ITEM	WORK DESCRIPTION	QTY	UNIT
7.202			Existing 18" CMP in good condition.		
7.240			Intersection with FSR 4872A, left.		
7.245			Existing 18" CMP in good condition.		
7.366			Existing 18" CMP in good condition.		
7.480			Existing 18" CMP in good condition.		
7.590		63311	REMOVE SIGN, DISPOSAL METHOD (A)	1.00	EACH
			Remove MP 8 sign.		
7.620			Existing 18" CMP in good condition.		
7.680			End of roadwork.		

WORKLIST					
Road # 4872A					
BEG M.P.	END M.P.	PAY ITEM	WORK DESCRIPTION	QTY	UNIT
0.000	0.865	30315	ROADWAY RECONDITIONING, COMPACTION METHOD (4)	0.87	MILE
		20210	SPECIAL CLEARING AND GRUBBING, TYPE ROADWAY, DISPOSAL METHOD (K), COMPACTION METHOD (5)	0.87	MILE
		62550	TURF ESTABLISHMENT, DRY METHOD SEEDING, DRY METHOD MULCHING, GOV'T FURNISHED SEED	0.32	ACRE
			No existing aggregate surfacing present. Small pine trees and alders growing along the edge of the roadway. Includes cleaning all culvert inlets and outlets. Turf establishment quantity assumed to be 3' ditch inslope for the full length of reconditioning area plus 0.1 acres for each new culvert, catch basin and surface water deflector.		
0.000			Intersection with FSR 4872.		
0.610		20421B	DRAINAGE EXCAVATION, RECONDITION DRAIN DIP TYPE II, TOLERANCE CLASS (A), COMPACTION METHOD (3)	1.00	EACH
0.683			Existing 18" CMP in good condition.		
0.754		20421B	DRAINAGE EXCAVATION, RECONDITION DRAIN DIP TYPE II, TOLERANCE CLASS (A), COMPACTION METHOD (3)	1.00	EACH
0.865			End of roadwork.		

WORKLIST					
Road # 4872B					
BEG M.P.	END M.P.	PAY ITEM	WORK DESCRIPTION	QTY	UNIT
0.000	0.824	30315	ROADWAY RECONDITIONING, COMPACTION METHOD (4)	0.82	MILE
		20210	SPECIAL CLEARING AND GRUBBING, TYPE ROADWAY, DISPOSAL METHOD (K), COMPACTION METHOD (5)	0.82	MILE
		62550	TURF ESTABLISHMENT, DRY METHOD SEEDING, DRY METHOD MULCHING, GOV'T FURNISHED SEED	0.40	ACRE
			No existing aggregate surfacing present. 6" DBH trees and alders growing in roadway. Includes cleaning all culvert inlets and outlets. Turf establishment quantity assumed to be 3' ditch inslope for the full length of reconditioning area plus 0.1 acres for each new culvert, catch basin and surface water deflector.		
0.082			Existing 18" CMP in good condition.		
0.250			Existing 18" CMP in good condition.		
0.360			Existing 18" CMP in good condition.		
0.560		20302A	REMOVAL OF CULVERT, DISPOSAL METHOD (A), COMPACTION METHOD (5)	1.00	EACH
		60201	18 INCH PIPE CULVERT, CORRUGATED STEEL, 16 GAGE, COMPACTION METHOD (6)	36.00	FOOT
		30207	ROADWAY AGGREGATE, COMPACTION METHOD (A) (GOV'T FURNISHED MATERIAL SOURCE)	10.00	CUBIC YARD*
			Remove existing 18" CMP in poor condition. Install new 36' long x 18" CMP. Surface disturbed area with 10 CY of aggregate surface course.		
0.824			End of roadwork.		

WORKLIST					
Road # 4873					
BEG M.P.	END M.P.	PAY ITEM	WORK DESCRIPTION	QTY	UNIT
0.000	3.510	30315	ROADWAY RECONDITIONING, COMPACTION METHOD (4)	3.51	MILE
		20210	SPECIAL CLEARING AND GRUBBING, TYPE ROADWAY, DISPOSAL METHOD (K), COMPACTION METHOD (5)	3.51	MILE
		62550	TURF ESTABLISHMENT, DRY METHOD SEEDING, DRY METHOD MULCHING, GOV'T FURNISHED SEED	1.28	ACRE
			No existing aggregate surfacing present. Small pine trees and alders growing along the edge of the roadway. Includes cleaning all culvert inlets and outlets. Turf establishment quantity assumed to be 3' ditch inslope for the full length of reconditioning area plus 0.1 acres for each new culvert, catch basin and surface water deflector.		
0.000			Intersection with FSR 4872.		
0.040			Existing 18" CMP in good condition.		
0.077			Existing surface water deflector in good condition.		
0.166			Existing surface water deflector in good condition.		
0.267		20421B	DRAINAGE EXCAVATION, RECONDITION DRAIN DIP TYPE II, TOLERANCE CLASS (A), COMPACTION METHOD (3)	1.00	EACH
0.336		20421B	DRAINAGE EXCAVATION, RECONDITION DRAIN DIP TYPE II, TOLERANCE CLASS (A), COMPACTION METHOD (3)	1.00	EACH
0.420			Existing surface water deflector in good condition.		
0.486			Existing surface water deflector in good condition.		
0.567			Existing surface water deflector in good condition.		
0.615			Existing 18" CMP in good condition.		
0.634			Existing surface water deflector in good condition.		
0.724			Existing 18" CMP in good condition.		
0.812		20421B	DRAINAGE EXCAVATION, RECONDITION DRAIN DIP TYPE II, TOLERANCE CLASS (A), COMPACTION METHOD (3)	1.00	EACH
0.921		20421B	DRAINAGE EXCAVATION, RECONDITION DRAIN DIP TYPE II, TOLERANCE CLASS (A), COMPACTION METHOD (3)	1.00	EACH
0.960		63311	REMOVE SIGN, DISPOSAL METHOD (A)	1.00	EACH
			Remove MP 1 sign.		
1.000		63301	SIGN SYSTEM	1.00	EACH
			Install new MP 1 sign. New FM1-7V.		
1.004			Existing 18" CMP in good condition.		
1.023			Existing surface water deflector in good condition.		
1.153			Existing surface water deflector in good condition.		
1.378		20421B	DRAINAGE EXCAVATION, RECONDITION DRAIN DIP TYPE II, TOLERANCE CLASS (A), COMPACTION METHOD (3)	1.00	EACH
1.464		20421B	DRAINAGE EXCAVATION, RECONDITION DRAIN DIP TYPE II, TOLERANCE CLASS (A), COMPACTION METHOD (3)	1.00	EACH
1.599		30207	ROADWAY AGGREGATE, COMPACTION METHOD (A) (GOV'T FURNISHED MATERIAL SOURCE)	10.00	CUBIC YARD*
			Bedrock showing in roadway. Place 10 CY of aggregate surface course for 50' long x 14' wide.		
1.806		30106	SCREENED AGGREGATE, GRADING O, COMPACTION METHOD (A) (GOV'T FURNISHED MATERIAL SOURCE)	15.00	CUBIC YARD*
		30207	ROADWAY AGGREGATE, COMPACTION METHOD (A) (GOV'T FURNISHED MATERIAL SOURCE)	10.00	CUBIC YARD*

WORKLIST					
Road # 4873					
BEG M.P.	END M.P.	PAY ITEM	WORK DESCRIPTION	QTY	UNIT
			Low point in roadway holding water. Place 15 CY of 6" compacted depth 3"-minus pit run for 50' long x 14' wide. Surface over the new pit run with 10 CY of aggregate surface course for 50' long x 14' wide.		
1.919			Intersection with FSR 4857, right.		
2.000		63301	SIGN SYSTEM	1.00	EACH
			Install new MP 2 sign. New FM1-7V.		
2.093			Existing surface water deflector in good condition.		
2.193			Existing surface water deflector in good condition.		
2.408		20421B	DRAINAGE EXCAVATION, RECONDITION DRAIN DIP TYPE II, TOLERANCE CLASS (A), COMPACTION METHOD (3)	1.00	EACH
2.438			Existing pipe gate with 16' usable width in good condition.		
2.488			Intersection with FSR 4878.		
2.490			Existing 18" CMP in good condition.		
2.617			Existing 18" CMP in good condition.		
2.880		63311	REMOVE SIGN, DISPOSAL METHOD (A)	1.00	EACH
			Remove MP 3 sign.		
3.000		63301	SIGN SYSTEM	1.00	EACH
			Install new MP 3 sign. New FM1-7V.		
3.510			End of roadwork.		

WORKLIST					
Road # 4878					
BEG M.P.	END M.P.	PAY ITEM	WORK DESCRIPTION	QTY	UNIT
0.000	2.233	30315	ROADWAY RECONDITIONING, COMPACTION METHOD (4)	2.23	MILE
		20210	SPECIAL CLEARING AND GRUBBING, TYPE ROADWAY, DISPOSAL METHOD (K), COMPACTION METHOD (5)	2.23	MILE
			No existing aggregate surfacing present. Includes cleaning all culvert inlets and outlets. Small pine trees and alders growing along the edge of the roadway.		
0.000	2.493	62550	TURF ESTABLISHMENT, DRY METHOD SEEDING, DRY METHOD MULCHING, GOV'T FURNISHED SEED	0.10	ACRE
			Turf establishment quantity assumed to be 3' ditch inslope for the full length of reconditioning area plus 0.1 acres for each new culvert, catch basin and surface water deflector.		
0.128		20421B	DRAINAGE EXCAVATION, RECONDITION DRAIN DIP TYPE II, TOLERANCE CLASS (A), COMPACTION METHOD (3)	1.00	EACH
0.306		20421B	DRAINAGE EXCAVATION, RECONDITION DRAIN DIP TYPE II, TOLERANCE CLASS (A), COMPACTION METHOD (3)	1.00	EACH
0.395		20421B	DRAINAGE EXCAVATION, RECONDITION DRAIN DIP TYPE II, TOLERANCE CLASS (A), COMPACTION METHOD (3)	1.00	EACH
0.537		20421B	DRAINAGE EXCAVATION, RECONDITION DRAIN DIP TYPE II, TOLERANCE CLASS (A), COMPACTION METHOD (3)	1.00	EACH
0.842		20421B	DRAINAGE EXCAVATION, RECONDITION DRAIN DIP TYPE II, TOLERANCE CLASS (A), COMPACTION METHOD (3)	1.00	EACH
0.965		20421B	DRAINAGE EXCAVATION, RECONDITION DRAIN DIP TYPE II, TOLERANCE CLASS (A), COMPACTION METHOD (3)	1.00	EACH
1.248		20421B	DRAINAGE EXCAVATION, RECONDITION DRAIN DIP TYPE II, TOLERANCE CLASS (A), COMPACTION METHOD (3)	1.00	EACH
1.607		20421B	DRAINAGE EXCAVATION, RECONDITION DRAIN DIP TYPE II, TOLERANCE CLASS (A), COMPACTION METHOD (3)	1.00	EACH
1.640			Existing 18" CMP in good condition.		
1.777		20421B	DRAINAGE EXCAVATION, RECONDITION DRAIN DIP TYPE II, TOLERANCE CLASS (A), COMPACTION METHOD (3)	1.00	EACH
2.104		20421B	DRAINAGE EXCAVATION, RECONDITION DRAIN DIP TYPE II, TOLERANCE CLASS (A), COMPACTION METHOD (3)	1.00	EACH
2.191		20421B	DRAINAGE EXCAVATION, RECONDITION DRAIN DIP TYPE II, TOLERANCE CLASS (A), COMPACTION METHOD (3)	1.00	EACH
2.233	2.493	21201	LINEAR GRADING, COMPACTION METHOD (3), DISPOSAL METHOD (F)	0.26	MILE
		20103	CLEARING AND GRUBBING, DISPOSAL METHOD (K)	0.26	MILE
			The planned horizontal alignment and profile grade shall follow the existing centerline of FSR 4878. Reconstruct the road according to Typical Section 1 where the existing road does not include a ditch. Reconstruct the road according to Typical Section 2 where the existing road includes a ditch. Apply Curve Widening as specified in the worklist and according to the Curve Widening Detail in the plans. No existing aggregate surfacing present. 6" DBH trees growing in the roadway.		
2.493			End of roadwork.		

WORKLIST					
Road # 4879					
BEG M.P.	END M.P.	PAY ITEM	WORK DESCRIPTION	QTY	UNIT
0.000	2.080	30315	ROADWAY RECONDITIONING, COMPACTION METHOD (4)	2.08	MILE
		20209	SELECTIVE CLEARING, TYPE ROADSIDE, DISPOSAL METHOD (F)	2.08	MILE
		62550	TURF ESTABLISHMENT, DRY METHOD SEEDING, DRY METHOD MULCHING, GOV'T FURNISHED SEED	0.76	ACRE
			No existing aggregate surfacing present. 4" DBH trees and alders growing on the edge of the roadway. Includes cleaning all culvert inlets and outlets. Turf establishment quantity assumed to be 3' ditch inslope for the full length of reconditioning area plus 0.1 acres for each new culvert, catch basin and surface water deflector.		
0.048			Existing pipe gate with 16' usable width in good condition.		
0.084			Existing 18" CMP in good condition.		
0.419		20421B	DRAINAGE EXCAVATION, RECONDITION DRAIN DIP TYPE II, TOLERANCE CLASS (A), COMPACTION METHOD (3)	1.00	EACH
0.707			Existing 18" CMP in good condition.		
0.834			Existing 18" CMP in good condition.		
1.558			Existing 18" CMP in good condition.		
1.612			Existing surface water deflector in good condition.		
1.663		20421B	DRAINAGE EXCAVATION, RECONDITION DRAIN DIP TYPE II, TOLERANCE CLASS (A), COMPACTION METHOD (3)	1.00	EACH
1.746		20421B	DRAINAGE EXCAVATION, RECONDITION DRAIN DIP TYPE II, TOLERANCE CLASS (A), COMPACTION METHOD (3)	1.00	EACH
1.937		30207	ROADWAY AGGREGATE, COMPACTION METHOD (A) (GOV'T FURNISHED MATERIAL SOURCE)	10.00	CUBIC YARD*
			Bedrock showing in roadway. Place 10 CY of aggregate surface course for 50' long x 14' wide.		
2.035		20421B	DRAINAGE EXCAVATION, RECONDITION DRAIN DIP TYPE II, TOLERANCE CLASS (A), COMPACTION METHOD (3)	1.00	EACH
2.080			Intersection with FSR 4857, left.		
2.080			End of roadwork.		

WORKLIST					
Road # 8833					
BEG M.P.	END M.P.	PAY ITEM	WORK DESCRIPTION	QTY	UNIT
0.000	0.814		No work on this segment. This segment of road is not intended to be used. Instead a temporary road is planned to connect road 8833 with road 4872B. The temporary road is to be constructed by others.		
0.814	1.189	21201	LINEAR GRADING, COMPACTION METHOD (3), DISPOSAL METHOD (F)	0.38	MILE
		20103	CLEARING AND GRUBBING, DISPOSAL METHOD (K)	0.38	MILE
		62550	TURF ESTABLISHMENT, DRY METHOD SEEDING, DRY METHOD MULCHING, GOV'T FURNISHED SEED	0.43	ACRE
0.814	1.020		The planned horizontal alignment and profile grade shall follow the existing centerline of FSR 8833 unless otherwise indicated in the worklist and flagged on the ground. Reconstruct the road according to Typical Section 1. Apply Curve Widening as specified in the worklist and according to the Curve Widen Detail in the plans. The existing road width is approximately 12 feet wide.		
1.020	1.100		The planned horizontal alignment and profile grade shall follow the established flagline. The approximate vertical profile grade is planned at 13%		
1.100	1.189		The planned horizontal alignment and profile grade shall follow the existing centerline of FSR 8833 unless otherwise indicated in the worklist and flagged on the ground. Reconstruct the road according to Typical Section 1. Apply Curve Widening as specified in the worklist and according to the Curve Widen Detail in the plans. The existing road width is approximately 12 feet wide.		

WORKLIST					
Road # 99047					
BEG M.P.	END M.P.	PAY ITEM	WORK DESCRIPTION	QTY	UNIT
0.000	0.466	30315	ROADWAY RECONDITIONING, COMPACTION METHOD (4)	0.47	MILE
		20210	SPECIAL CLEARING AND GRUBBING, TYPE ROADWAY, DISPOSAL METHOD (K), COMPACTION METHOD (5)	0.47	MILE
		62550	TURF ESTABLISHMENT, DRY METHOD SEEDING, DRY METHOD MULCHING, GOV'T FURNISHED SEED	0.17	ACRE
			No existing aggregate surfacing present. 4" DBH trees and alders growing in roadway. Includes cleaning all culvert inlets and outlets. Turf establishment quantity assumed to be 3' ditch inslope for the full length of reconditioning area plus 0.1 acres for each new culvert, catch basin and surface water deflector.		
0.000			Intersection with FSR 228.		
0.000		63301	SIGN SYSTEM	1.00	EACH
			Install new stop sign. New R1-1 and post.		
0.417		20421B	DRAINAGE EXCAVATION, RECONDITION DRAIN DIP TYPE II, TOLERANCE CLASS (A), COMPACTION METHOD (3)	1.00	EACH
0.050			Existing pipe gate with 16' usable width in good condition.		
0.100		20421B	DRAINAGE EXCAVATION, RECONDITION DRAIN DIP TYPE II, TOLERANCE CLASS (A), COMPACTION METHOD (3)	1.00	EACH
0.154		20421B	DRAINAGE EXCAVATION, RECONDITION DRAIN DIP TYPE II, TOLERANCE CLASS (A), COMPACTION METHOD (3)	1.00	EACH
0.200		20421B	DRAINAGE EXCAVATION, RECONDITION DRAIN DIP TYPE II, TOLERANCE CLASS (A), COMPACTION METHOD (3)	1.00	EACH
0.210			Existing 24" CMP in good condition.		
0.240		20421B	DRAINAGE EXCAVATION, RECONDITION DRAIN DIP TYPE II, TOLERANCE CLASS (A), COMPACTION METHOD (3)	1.00	EACH
0.466			End of roadwork.		

WORKLIST					
Road # 99047A					
BEG M.P.	END M.P.	PAY ITEM	WORK DESCRIPTION	QTY	UNIT
0.000	0.572	30315	ROADWAY RECONDITIONING, COMPACTION METHOD (4)	0.57	MILE
		20210	SPECIAL CLEARING AND GRUBBING, TYPE ROADWAY, DISPOSAL METHOD (K), COMPACTION METHOD (5)	0.57	MILE
		62550	TURF ESTABLISHMENT, DRY METHOD SEEDING, DRY METHOD MULCHING, GOV'T FURNISHED SEED	0.31	ACRE
			No existing aggregate surfacing present. 4" DBH trees and alders growing in roadway. Includes cleaning all culvert inlets and outlets. Turf establishment quantity assumed to be 3' ditch inslope for the full length of reconditioning area plus 0.1 acres for each new culvert, catch basin and surface water deflector.		
0.000			Intersection with FSR 99047.		
0.142		20421B	DRAINAGE EXCAVATION, RECONDITION DRAIN DIP TYPE II, TOLERANCE CLASS (A), COMPACTION METHOD (3)	1.00	EACH
0.250		20421B	DRAINAGE EXCAVATION, RECONDITION DRAIN DIP TYPE II, TOLERANCE CLASS (A), COMPACTION METHOD (3)	1.00	EACH
0.330		20421B	DRAINAGE EXCAVATION, RECONDITION DRAIN DIP TYPE II, TOLERANCE CLASS (A), COMPACTION METHOD (3)	1.00	EACH
0.430		20415	EMBANKMENT CONSTRUCTION, COMPACTION METHOD (3), TOLERANCE CLASS (A)	12.00	CUBIC YARD*
		25101	PLACED RIPRAP, CLASS 3	14.00	CUBIC YARD*
			Shoulder slide encroaching 4' into the roadway. Place 12 CY of roadway embankment for 15' long x 10' tall x 2' thick. Place 14 CY of class 3 riprap on top of the new embankment to stabilize the fill slope.		
0.440			Existing 24" CMP good condition.		
0.530		20421B	DRAINAGE EXCAVATION, RECONDITION DRAIN DIP TYPE II, TOLERANCE CLASS (A), COMPACTION METHOD (3)	1.00	EACH
0.572			End of roadwork.		